Drawings and Documents

Attachment 51 – Appendix 10

High Level Waste Building
Index

Appendix 10.1	Process Flow Diagrams
Appendix 10.2	Piping and Instrumentation Diagrams
Appendix 10.4	General Arrangement Drawings
Appendix 10.5	Civil, Structural, and Architectural Criteria and Typical Design Details
Appendix 10.6	Mechanical Drawings
Appendix 10.7	Specifications
Appendix 10.8	Engineering Calculations
Appendix 10.9	Material Selection Documentation
Appendix 10.10	High Level Waste Building Critical Systems Equipment/Instrument List
Appendix 10.11	IQRPE Reports
Appendix 10.13	Instrument Control Logic and Narrative Description
Appendix 10.18	Operating Documents

Attachment 51 – Appendix 10.1
High Level Waste Building
Process Flow Diagrams

Where information regarding treatment, management, and disposal of the radioactive source, byproduct material, and/or special nuclear components of mixed waste (as defined by the Atomic Energy Act of 1954, as amended) has been incorporated into this permit, it is not incorporated for the purpose of regulating the radiation hazards of such components under the authority of this permit and chapter 70.105 RCW. In the event of any conflict between Permit Condition III.10.A. and any statement relating to the regulation of source, special nuclear, and byproduct material contained in portions of the permit application that are incorporated into this permit, Permit Condition III.10.A. will prevail.

Additional appendices will be added to this appendix as new information is incorporated into this permit.

Drawings and Documents

Attachment 51 – Appendix 10.1

High Level Waste Building
Process Flow Diagrams

The following drawings have been incorporated into Appendix 10.1 and can be viewed at the Ecology Richland Office. **New drawings are in bold lettering**.

Drawing/Document	Description
24590-HLW–M0-HSH-P0075, Rev 1	**Process Flow Diagram HSH System**
24590-HLW-M5-V17T-P0001, Rev 3	Process Flow Diagram HCP/HFP System
24590-HLW-M5-V17T-P0002, Rev 1	Process Flow Diagram HMP/HOP System Melter 1
24590-HLW–M5-V17T-P0003, Rev 1	Process Flow Diagram HOP System (Melter 1, Primary)
24590-HLW–M5-V17T-P0004, Rev 1	Process Flow Diagram HOP System (Melter 1, Secondary)
24590-HLW-MT-V17T-P00005, Rev 0	Process Flow Diagram PJV System
24590-HLW-M5-V17T-P0006, Rev 2	Process Flow Diagram HDH System
24590-HLW-M5-V17T-P0007001, Rev 1	Process Flow Diagram RLD System Sheet 1
24590-HLW-M5-V17T-P0007002, Rev 1	Process Flow Diagram RLD System Sheet 2
24590-HLW-M5-V17T-P20002, Rev 1	Process Flow Diagram HMP/HOP Melter 2
24590-HLW–M5-V17T-P20003, Rev 1	Process Flow Diagram HOP System (Melter 2, Primary)
24590-HLW–M5-V17T-P20004, Rev 0	Process Flow Diagram HOP System (Melter 2, Secondary)
RESERVED	RESERVED

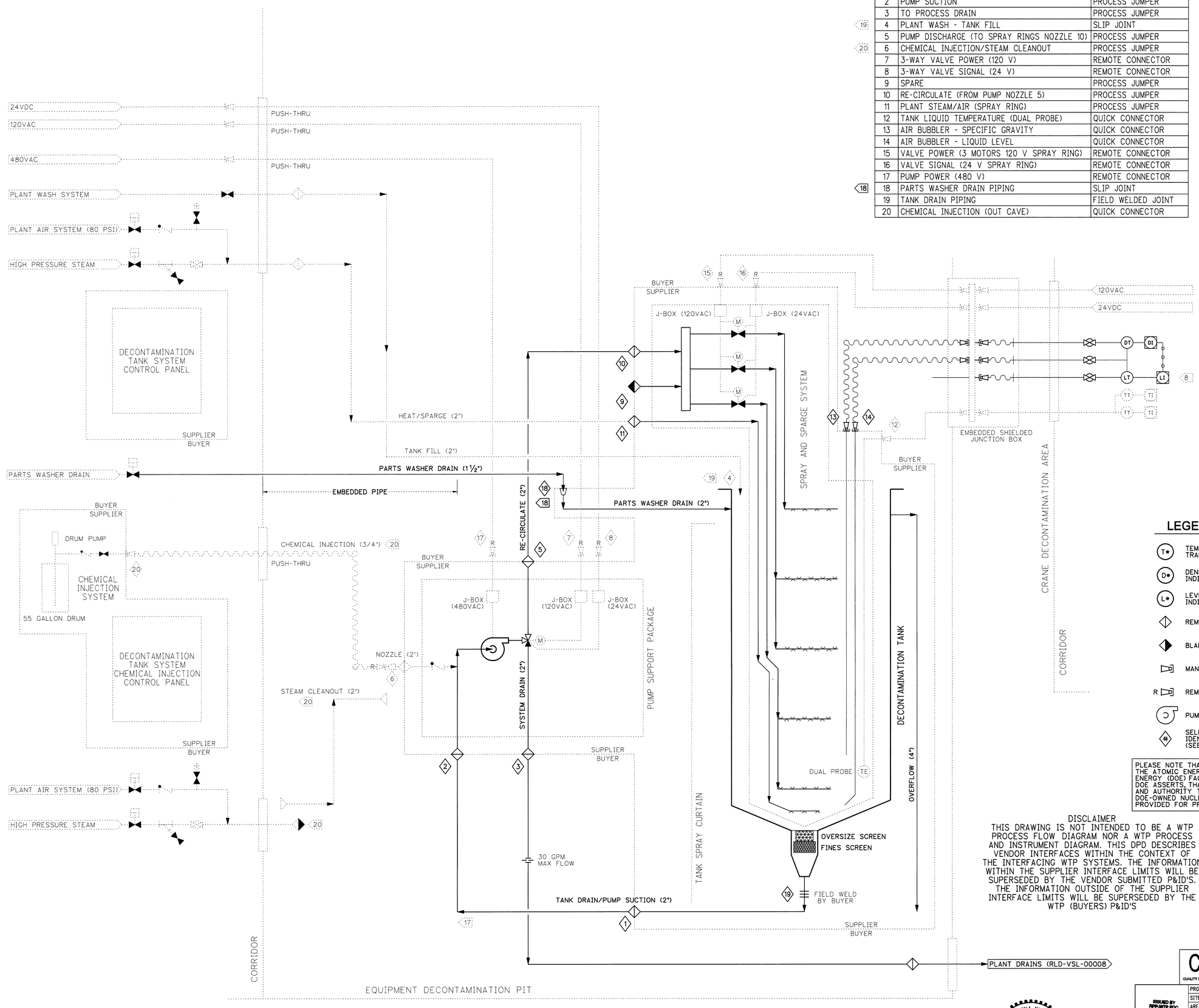

NOZZLE/CONNECTION IDENTIFICATION TABLE

ID	DESCRIPTION	TYPE
1	TANK DRAIN	PROCESS JUMPER
2	PUMP SUCTION	PROCESS JUMPER
3	TO PROCESS DRAIN	PROCESS JUMPER
4	PLANT WASH - TANK FILL	SLIP JOINT
5	PUMP DISCHARGE (TO SPRAY RINGS NOZZLE 10)	PROCESS JUMPER
6	CHEMICAL INJECTION/STEAM CLEANOUT	PROCESS JUMPER
7	3-WAY VALVE POWER (120 V)	REMOTE CONNECTOR
8	3-WAY VALVE SIGNAL (24 V)	REMOTE CONNECTOR
9	SPARE	PROCESS JUMPER
10	RE-CIRCULATE (FROM PUMP NOZZLE 5)	PROCESS JUMPER
11	PLANT STEAM/AIR (SPRAY RING)	PROCESS JUMPER
12	TANK LIQUID TEMPERATURE (DUAL PROBE)	QUICK CONNECTOR
13	AIR BUBBLER - SPECIFIC GRAVITY	QUICK CONNECTOR
14	AIR BUBBLER - LIQUID LEVEL	QUICK CONNECTOR
15	VALVE POWER (3 MOTORS 120 V SPRAY RING)	REMOTE CONNECTOR
16	VALVE SIGNAL (24 V SPRAY RING)	REMOTE CONNECTOR
17	PUMP POWER (480 V)	REMOTE CONNECTOR
18	PARTS WASHER DRAIN PIPING	SLIP JOINT
19	TANK DRAIN PIPING	FIELD WELDED JOINT
20	CHEMICAL INJECTION (OUT CAVE)	QUICK CONNECTOR

NOTES:

1. ONLY ONE SPRAY RING GROUP IS TO BE OPERATING AT ANY TIME.
2. PLANT WASH SYSTEM TO PROVIDE DEMINERALIZED WATER OR DILUTED NITRIC ACID.
3. DELETED
4. DELETED
5. DELETED
6. DELETED
7. STEAM HEAT SYSTEM SHALL BE SIZED TO HEAT UP A FULL DECON TANK FROM 50° F TO 200° F IN 4 HOURS.
8. FOR INSTRUMENTATION REQUIREMENTS SEE SPECIFICATION 24590-WTP-3PS-JQ07-T0001.
9. **FOR PIPING AND VALVE REQUIREMENTS SEE SPECIFICATION 24590-WTP-3PS-HD00-TP001.**
10. DELETED
11. DELETED
12. DELETED
13. DELETED
14. DELETED
15. DELETED
16. THIS DRAWING PROVIDED BASIC OUTLINES AND DESIGN OBJECTIVES TO CONTRACTED DESIGN OR FABRICATION SUPPLIER(S) AND SHALL NOT BE USED TO CONFIRM THE AS-BUILT WTP STRUCTURE, SYSTEM OR COMPONENT IDENTIFIED HEREIN. SEE VENDOR INFORMATION FOR FINAL CONFIGURATION PROVIDED IN CONFORMANCE TO PURCHASE ORDER 24590-CM-POA-HDYR-00001.
17. FLOW REVERSES FROM PUMP SUPPORT PACKAGE TO DECON TANK WHEN PURGING LINE WITH STEAM OR AIR.
18. **REDUCER SIZE - 3" TO 2". FACILITY PIPING (1½") INSERTS INTO 3" SIDE OF REDUCER TO ALLOW UNRESTRAINED TANK GROWTH DURING TANK HEATING OPERATIONS.**
19. JUMPER PIPE END INSERTS INTO OVERSIZED HOLE LOCATED IN TOP FLANGE OF SPARGE AND SPRAY SYSTEM (SPRAY RINGS).
20. CHEMICAL INJECTION JUMPER AND BLANKED REMOTE JUMPER CONNECTOR (PLANT STEAM/AIR) TO BE REMOVED FOR TEMPORARY INSTALLATION OF STEAM CLEANOUT JUMPER.
21. **REVISION HISTORY:**
UPDATED TO REFLECT SUPPLIERS DESIGN SUBMITTALS AND BUYERS DEVELOPING FACILITY P&ID. MODIFIED SUPPLIER EQUIPMENT TITLES TO MATCH DPD'S. ADDED ROOM/CORRIDOR CALLOUTS. ADDED MANUAL CONNECTORS TO POWER/SIGNAL LINES. MODIFIED PLANT WASH LINE. MODIFIED PLANT AIR AND HIGH PRESSURE STEAM TO SPRAY AND SPARGE SYSTEM. ADDED PARTS WASHER LINE. MODIFIED PLANT STEAM TO TANK DRAIN CLEANOUT. ADDED AIR LINE TO TANK DRAIN CLEANOUT. MODIFIED CHEMICAL INJECTION LINE. DELETED SYSTEM DRAIN JUMPER VALVES. ADDED J-BOXES. ADDED FIELD WELD TO TANK DRAIN PIPING. REVISED SELLER NOZZLE ID NUMBES AND ADDED TABLE. REMOVED BUYER NOZZLE ID NUMBERS. UPDATED SYMBOL LEGEND. REVISED TITLE AND REF DWGS. ADDED MELTER CAVE 1 AND 2 CALLOUTS.
22. CONTENTS OF THIS DOCUMENT ARE DANGEROUS WASTE PERMIT AFFECTING.
23. THE COMPONENTS SHOWN ON THIS DRAWING IN PHANTOM DO NOT REQUIRE INDEPENDENT QUALIFIED REGISTERED PROFESSIONAL ENGINEER ASSESSMENTS OF DESIGN OR INSTALLATION INSPECTIONS BY A QUALIFIED INSTALLATION INSPECTOR IN ACCORDANCE WITH THE DWP AND/OR WASHINGTON ADMINISTRATIVE CODE REQUIREMENTS.

LEGEND

- TEMPERATURE ELEMENT/ TRANSMITTER/INDICATOR
- DENSITY TRANSMITTER/ INDICATOR
- LEVEL TRANSMITTER/ INDICATOR
- REMOTE JUMPER CONNECTION
- BLANKED REMOTE JUMPER CONNECTION
- MANUAL QUICK DISCONNECT
- R REMOTE QUICK DISCONNECT
- PUMP
- SELLER'S NOZZLE/CONNECTION IDENTIFICATION NUMBER (SEE TABLE)
- REDUCER
- REDUCER USED AS SLIP JOINT
- ORIFICE UNION
- CHECK VALVE
- MANUAL ON/OFF VALVE (SHOWN NORMALLY CLOSED)
- BALL VALVE (SHOWN NORMALLY CLOSED)
- PNUEMATIC ACTUATED VALVE (SHOWN NORMALLY CLOSED)
- MOTORIZED ON/OFF VALVE (SHOWN NORMALLY CLOSED)
- MOTORIZED THREE-WAY VALVE

PLEASE NOTE THAT SOURCE, SPECIAL NUCLEAR AND BYPRODUCT MATERIALS, AS DEFINED IN THE ATOMIC ENERGY ACT OF 1954 (AEA), ARE REGULATED AT THE U.S. DEPARTMENT OF ENERGY (DOE) FACILITIES EXCLUSIVELY BY DOE ACTING PURSUANT TO ITS AEA AUTHORITY. DOE ASSERTS, THAT PURSUANT TO THE AEA, IT HAS SOLE AND EXCLUSIVE RESPONSIBILITY AND AUTHORITY TO REGULATE SOURCE, SPECIAL NUCLEAR, AND BYPRODUCT MATERIALS AT DOE-OWNED NUCLEAR FACILITIES. INFORMATION CONTAINED HEREIN ON RADIONUCLIDES IS PROVIDED FOR PROCESS DESCRIPTION PURPOSES ONLY.

DISCLAIMER
THIS DRAWING IS NOT INTENDED TO BE A WTP PROCESS FLOW DIAGRAM NOR A WTP PROCESS AND INSTRUMENT DIAGRAM. THIS DPD DESCRIBES VENDOR INTERFACES WITHIN THE CONTEXT OF THE INTERFACING WTP SYSTEMS. THE INFORMATION WITHIN THE SUPPLIER INTERFACE LIMITS WILL BE SUPERSEDED BY THE VENDOR SUBMITTED P&ID'S. THE INFORMATION OUTSIDE OF THE SUPPLIER INTERFACE LIMITS WILL BE SUPERSEDED BY THE WTP (BUYERS) P&ID'S

REFERENCE DRAWINGS

DWG NO	TITLE
24590-HLW-M0-HSH-00071	HLW HSH DPD DECONTAMINATION TANK ASSEMBLY
24590-HLW-M0-HSH-00064	HLW HSH DPD DECON TANK CONTROL CABINETS
24590-HLW-M0-HSH-P0072	HLW HSH DPD DECONTAMINATION TANK
24590-HLW-M0-HSH-00073	HLW HSH DPD DECON TANK SPRAY & SPARGE SYS
24590-HLW-M0-HSH-00074	HLW HSH DPD DECON TANK PUMP SUPPORT PKG
24590-HLW-M0-HSH-00076	HLW HSH DPD DECON TANK DISCHARGE FILTER
24590-HLW-M0-HSH-00077	HLW HSH DPD DECON TANK LID
24590-HLW-M6-RLD-P0003	P&ID - HLW RADIOACTIVE LIQUID WASTE DISPOSAL

REV	DESCRIPTION	ORG	CHKD	RVWD	APVD	DATE
1	ISSUED FOR PERMITTING USE COMPLETE REDRAW SEE NOTE 21	AC	JSL	PAS SLW	JLW	6/7/07
0	ISSUED FOR PERMITTING USE	ARR	RL	LH	DW	11/04/04

REVISION HISTORY

CM QUALITY DESIGNATOR

MELTER CAVE 1 DECON TANK
MELTER CAVE 2 DECON TANK
TANK LID OMITTED FOR CLARITY

STEVEN L. WINSEL, STATE OF WASHINGTON, 42423, REGISTERED PROFESSIONAL ENGINEER
EXPIRES 5/6/2008

ISSUED BY RPP-WTP PDC
ISSUE STAMP

PROJECT No.	24590
SITE	HANFORD
AREA	200E
BUILDING No.	30

	BY	DATE
ORIGINATOR	ALAN RATHMACHER	11/03/04
CHECKER	ROBERT LEYVA	11/03/04
APPROVER	DAVID J WILSEY	11/04/04
REVIEWER	LAWRNEL HARRISON	11/03/04

CONTENT APPLICABLE TO ALARA? [X] YES [ ] NO
ADR NO. N/A REV:
SAFETY SCREEN REQUIRED? [ ] YES [X] NO EMS INITIAL IF YES

BECHTEL
RIVER PROTECTION PROJECT
WASTE TREATMENT PLANT
2435 STEVENS CENTER PLACE
RICHLAND, WA 99354

CONTRACT No: DE-AC27-01RV14136

HLW VITRIFICATION SYSTEM HSH MELTER CAVES 1&2 DESIGN PROPOSAL DRAWING DECONTAMINATION TANK PROCESS FLOW DIAGRAM

SCALE: NONE
24590-HLW-M0-HSH-P0075
REV 1

SAFETY SCREEN IS REQUIRED FOR DRAWING TYPES IDENTIFIED IN 24590-WTP-GPP-SREG-002

'E' SIZE - 44x34
COMPUTER GENERATED - MANUAL CHANGES NOT PERMITTED

06/05/2007 02:40:40 PM

PLOTTED BY: cwin
C:\Work\dgns\24235\HLWM0HSHP0075_0.dgn

FORM E_SDN.DGN 02/2003

PLANT ITEM NUMBER / DESCRIPTION	
HFP-DMST-00004	MELTER 2 FEED VESSEL DEMISTER
HFP-PMP-00014/15	MELTER 2 FEED AIR DISPLACEMENT SLURRY (ADS) PUMP
HFP-VSL-00006	MELTER 2 FEED VESSEL
GFR-TK-00031	HLW MELTER FEED HOPPER
GFR-MHAN-00005	AGGLOMERATION EQUIPMENT HLW MELTER #2
HFP-PMP-00018A/B	MELTER 2 FEED PREP VESSEL TRANSFER/ SAMPLE PUMP
HFP-VSL-00005	MELTER 2 FEED PREPARATION VESSEL
HFP-DMST-00003	MELTER 2 FEED PREP VESSEL DEMISTER
HFP-DMST-00001	MELTER 1 FEED PREP VESSEL DEMISTER
HFP-VSL-00001	MELTER 1 FEED PREPARATION VESSEL
HFP-PMP-00005A/B	MELTER 1 FEED PREP VESSEL TRANSFER/ SAMPLE PUMP
GFR-MHAN-00004	AGGLOMERATION EQUIPMENT HLW MELTER #1
GFR-TK-00025	HLW MELTER FEED HOPPER
HFP-VSL-00002	MELTER 1 FEED VESSEL
HFP-PMP-00001/2	MELTER 1 FEED AIR DISPLACEMENT SLURRY (ADS) PUMP
HFP-DMST-00002	MELTER 1 FEED VESSEL DEMISTER

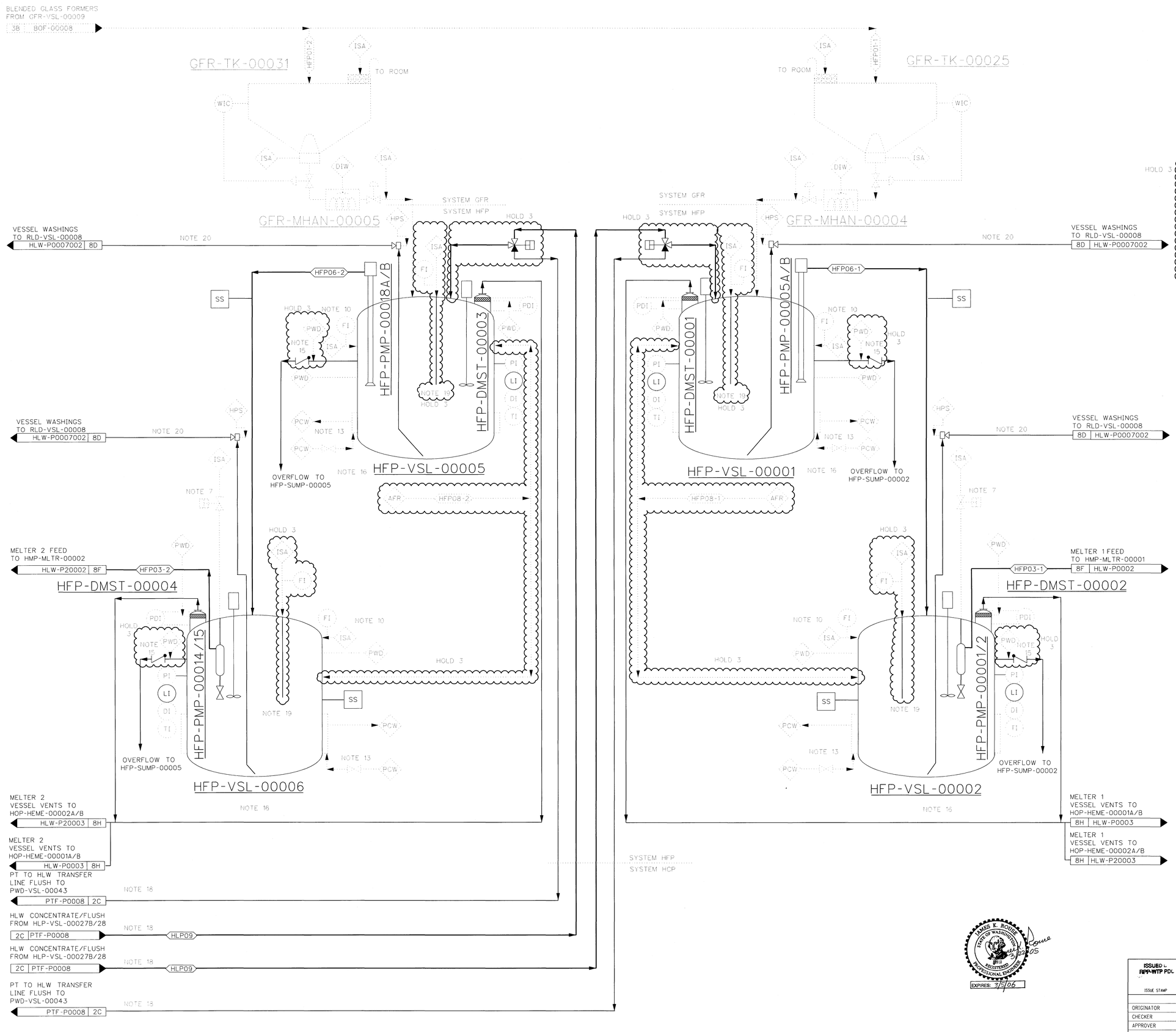

NOTES:

1. SEE DRAWING 24590-WTP-M5-V17T-P0001 FOR LEGEND AND SYMBOLS.
2. MAJOR INDICATION AND CONTROL INSTRUMENTATION ONLY SHOWN
3. VALVES SHOWN ONLY TO INDICATE PROCESS INTENT.
4. DELETED.
5. DELETED.
6. DELETED.
7. THE ADS PUMPING RATE WILL BE MANUALLY ADJUSTED TO MAINTAIN APPROPRIATE PLENUM TEMPERATURES AND TO PROVIDE THE DESIRED GLASS PRODUCTION.
8. DELETED.
9. DELETED.
10. INSTRUMENT AIR ADDED TO VESSELS FOR HYDROGEN MITIGATION.
11. DELETED.
12. DELETED.
13. VESSEL TEMPERATURE WILL BE INDIRECTLY CONTROLLED VIA A TEMPERATURE CONTROL LOOP ON THE OVERALL COOLING WATER SYSTEM THAT WILL DICTATE THE COOLING WATER INLET TEMPERATURE. BY CONTROLLING THE COOLING WATER INLET TEMPERATURE AND OPERATING THE COOLING JACKETS AT FULL OPERATING CAPACITY, THE TEMPERATURE OF THE VESSEL CONTENTS WILL EFFECTIVELY BE CONTROLLED. AS INDICATED, MANUAL VALVES WILL BE INSTALLED ON EACH COOLING WATER JACKET FOR INITIAL BALANCING.
14. CONTENTS OF THIS DOCUMENT ARE DANGEROUS WASTE PERMIT AFFECTING

HOLD 3

15. VESSEL OVERFLOWS ARE EQUIPPED WITH A FLAPPER VALVE TO PREVENT AIR INLEAKAGE DURING NORMAL OPERATION
16. EXPLOSIVE GAS (I.E., HYDROGEN) MONITORING CAPABILITY TO BE PROVIDED VIA DISTRIBUTION RACK FOR WASH RINGS.
17. DELETED.
18. PRETREATMENT TO HLW WASTE TRANSFER LINE THREE WAY VALVES SHALL BE CAPABLE OF DIVERTING FLOW IN ALL THREE DIRECTIONS. NORMAL OPERATIONS WILL BE TO DIRECT THE WASTE TRANSFER INTO THE MFPV AND THEN TO DIVERT THE LINE FLUSH BACK TO PRETREATMENT VIA THE OTHER TRANSFER LINE TO MINIMIZE WASTE DILUTION. EITHER OF THE 2 WASTE TRANSFER LINES DEDICATED TO AN MFPV MAY BE USED TO RECEIVE CONCENTRATE FOLLOWED BY A LINE FLUSH WITH THE OTHER WASTE TRANSFER LINE USED TO RETURN THE LINE FLUSH.
19. INSTRUMENT AIR ADDED TO VESSEL THROUGH SPARGER FOR BACK-UP MIXING.
20. PARTICLES LARGER THAN 1/4 INCH ARE EXCLUDED FROM THE SOLIDS PERCENT BELOW THE MAXIMUM LEVEL FOR RLD-VSL-00008.
21. THE PORTIONS OF THIS DRAWING SHOWN IN PHANTOM ARE CONSIDERED NON-PERMIT AFFECTING AND ARE NOT SUBJECT TO THE REGULATORY REQUIREMENTS OF THE WAC CODE FOR THE DANGEROUS WASTE PERMIT TO THE EXTENT THAT THOSE PORTIONS DO NOT IMPACT DANGEROUS WASTE AREAS/OPERERATIONS.
22. THE FOLLOWING CHANGES WERE INCORPORATED INTO THE DRAWING: THE CRVS WERE DELETED, PSA WAS CHANGED TO ISA, FLAPPER VALVES ON THE OVERFLOWS AND AIR SPARGERS WERE ADDED TO ALL VESSELS, AFR ADDITION AND A THREE WAY VALVE FROM PT WERE ADDED, EMPTYING EJECTORS AND VARIOUS EQUIPMENT TAGS WERE ADDED, SUGAR ADDITION WAS DELETED, FLUSH LINE RETURN TO PT ADDED, AND MELTER 1 AND 2 VESSEL VENT HEADERS CONNECTED.

HOLDS:

1. DELETED.
2. DELETED.
3. HYDROGEN MITIGATION CHANGES PENDING DOE APPROVAL.

REFERENCES:

1. DELETED.
2. 24590-HLW-3YD-HFP-00001, SYSTEM DESCRIPTION FOR HLW CONCENTRATE RECEIPT AND MELTER FEED PROCESS SYSTEMS (HCP AND HFP)
3. DELETED.
4. DELETED.
5. DELETED.
6. DELETED.
7. DELETED.
8. DELETED.
9. DELETED.
10. DELETED.
11. DELETED.
12. DELETED.
13. DELETED.
14. DELETED.

PLEASE NOTE THAT SOURCE, SPECIAL NUCLEAR, AND BYPRODUCT MATERIALS, AS DEFINED IN THE ATOMIC ENERGY ACT OF 1954 (AEA), ARE REGULATED AT THE U.S. DEPARTMENT OF ENERGY (DOE) FACILITIES EXCLUSIVELY BY DOE ACTING PERSUANT TO ITS AEA AUTHORITY. DOE ASSERTS, THAT PERSUANT TO THE AEA, IT HAS SOLE AND EXCLUSIVE RESPONSIBILITY AND AUTHORITY TO REGULATE SOURCE, SPECIAL NUCLEAR, AND BYPRODUCT MATERIALS AT DOE-OWNED NUCLEAR FACILITIES. INFORMATION CONTAINED HEREIN ON RADIONUCLIDES IS PROVIDED FOR PROCESS DESCRIPTION PURPOSES ONLY.

REV	DESCRIPTION	ORG	CHKD	RVWD	APVD	DATE
3	MAJOR REVISION, SEE NOTE 22. ISSUED FOR PERMITTING USE.	RR	NJ	JP	TV	3-22-05
2	ISSUED FOR PERMITTING USE.	RR	NJ	JP	TV	5-3-04
1	PREVIOUS REVISION DID NOT HAVE A PE STAMP	DRH	TJV	AGD	SCF	11-5-02
0	ISSUED FOR PERMITTING USE.	DRH	TJV	JKR	GD	10-29-02

REVISION HISTORY

JAMES K. HOUSE, STATE OF WASHINGTON, 38179, REGISTERED PROFESSIONAL ENGINEER, EXPIRES: 3/9/06

ISSUED FOR RPP-WTP PDC

ISSUE STAMP

PROJECT No.	24590	
SITE	HANFORD	
AREA	200E	
BUILDING No.	30	
	BY	DATE
ORIGINATOR	HIRZEL, DAVID	10-28-02
CHECKER	VALENTI, THOMAS	10-28-02
APPROVER	DUNCAN, GARTH	10-29-02
REVIEWER		

CONTENT APPLICABLE TO ALARA? [X] YES [ ] NO
ADR NO. N/A REV:

BECHTEL

RIVER PROTECTION PROJECT
WASTE TREATMENT PLANT
2435 STEVENS CENTER PLACE
RICHLAND, WA 99352

CONTRACT No: DE-AC27-01RV14136

PROCESS FLOW DIAGRAM HLW RECEIPT & FEED PREPARATION (SYSTEM HCP, GFR, & HFP)

SCALE: NTS

24590-HLW-M5-V17T-P0001

REV 3

'E' SIZE - 44x34
COMPUTER GENERATED - MANUAL CHANGES NOT PERMITTED

R10520465

03/21/2005 10:14:15 AM

PLOTTED BY: rrrozel
C:\Work\jobs06034\24590-HLW-M5-V17T-P0001.dgn

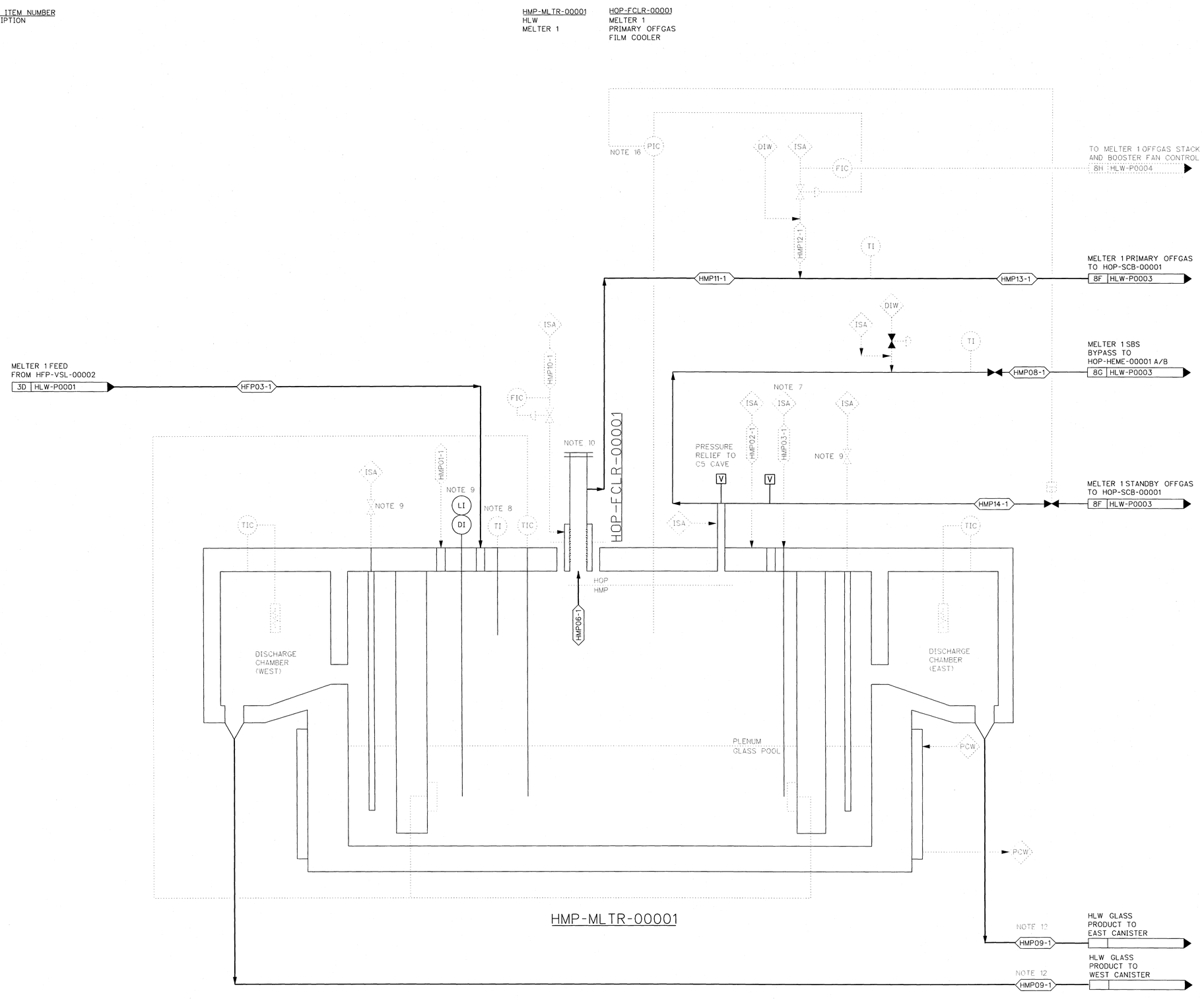

NOTES:

1. SEE DRAWING 24590-WTP-M5-V17T-P0001 FOR LEGEND AND SYMBOLS.
2. MAJOR INDICATION AND CONTROL INSTRUMENTATION ONLY SHOWN
3. VALVES SHOWN ONLY TO INDICATE PROCESS INTENT
4. DELETED
5. DELETED
6. EQUIPMENT INFORMATION PROVIDED PER MELTER DATASHEET.
7. INSTRUMENT AIR SERVICES AND ACCOMMODATIONS ARE PROVIDED FOR GLASS AGITATION BUBBLERS TO INCREASE MELTER CAPACITY.
8. PLENUM TEMPERATURE INDICATION IS USED TO MANUALLY CONTROL THE ADS PUMP OPERATION IN CONJUNCTION WITH DESIRED GLASS PRODUCTION AND ADJUSTMENTS TO GLASS AGITATION BUBBLING RATES.
9. GLASS LEVEL INDICATION IS USED TO MANUALLY CONTROL THE GLASS AIRLIFT DISCHARGE.
10. PROVISIONS WILL BE MADE FOR THE INSTALLATION OF A FILM COOLER CLEANER IF NECESSARY.
11. DELETED
12. GLASS PRODUCT IS SEMI-CONTINUOUSLY DISCHARGED FROM THE MELTER BASED ON GLASS LEVEL IN MELTER AND/OR FILL HEIGHT IN CANISTER.
13. BATCH CAPACITY REFERS TO VESSELS AND TANKS ONLY. OPERATING CAPACITY REFERS TO ALL OTHER EQUIPMENT.
14. DELETED.
15. CONTENTS OF THIS DOCUMENT ARE DANGEROUS WASTE PERMIT AFFECTING.
16. THE STANDBY OFFGAS JUMPER IS CLOSED DURING NORMAL OPERATIONS, BUT WILL AUTOMATICALLY OPEN UPON LOSS OF A SIGNIFICANT AMOUNT OF MELTER PLENUM VACUUM.
17. THE PORTIONS OF THIS DRAWING SHOWN IN PHANTOM ARE CONSIDERED NON-PERMIT AFFECTING AND ARE NOT SUBJECT TO THE REGULATORY REQUIREMENTS OF THE WAC CODE FOR THE DANGEROUS WASTE PERMIT TO THE EXTENT THAT THOSE PORTIONS DO NOT IMPACT DANGEROUS WASTE AREAS/OPERATIONS.
18. THE FOLLOWING CHANGES WERE INCORPORATED INTO THIS DRAWING REVISION: PERMITTED SELECTED MELTER INTERNALS, CONTROL STRATEGY SIMPLIFICATION, ADDED SECOND MELTER FLAPPER VALVE, CHANGED FLAPPER VALVE SYMBOL, PERMITTED COOLING PANELS AND ADDED NOTES AND REFERENCES.

REFERENCES:

1. 24590-HLW-3YD-HMP-00001: SYSTEM DESCRIPTION FOR HLW MELTER PROCESS SYSTEM (HMP).
2. 24590-WTP-RPT-PR-01-008: PROCESS STREAM NUMBERS.
3. 24590-WTP-RPT-ENG-02-009: SYSTEM AND AREA LOCATORS LIST AND SYSTEM DIVISION OF RESPONSIBILITY.
4. 24590-WTP-RPT-ENG-02-010: COMPONENT IDENTIFIERS LIST.
5. 24590-WTP-3DP-G03B-00044: STANDARD COMPONENT NUMBERING.
6. 24590-HLW-MOD-HMP-P0001: 24590-HLW-ME-HMP-MLTR-00001 - HIGH LEVEL WASTE MELTER 1.

PLEASE NOTE THAT SOURCE, SPECIAL NUCLEAR, AND BYPRODUCT MATERIALS, AS DEFINED IN THE ATOMIC ENERGY ACT OF 1954 (AEA), ARE REGULATED AT THE U.S. DEPARTMENT OF ENERGY (DOE) FACILITIES EXCLUSIVELY BY DOE ACTING PURSUANT TO ITS AEA AUTHORITY. DOE ASSERTS, THAT PURSUANT TO THE AEA, IT HAS SOLE AND EXCLUSIVE RESPONSIBILITY AND AUTHORITY TO REGULATE SOURCE, SPECIAL NUCLEAR, AND BYPRODUCT MATERIALS AT DOE-OWNED NUCLEAR FACILITIES. INFORMATION CONTAINED HEREIN ON RADIONUCLIDES IS PROVIDED FOR PROCESS DESCRIPTION PURPOSES ONLY.

JAMES K. ROUSE
STATE OF WASHINGTON
33910
REGISTERED
PROFESSIONAL ENGINEER
EXPIRES: 3/9/08

REV	DESCRIPTION	ORG	CHKD	RVWD	APVD	DATE
1	ISSUED FOR PERMITTING USE. MAJOR REVISION, SEE NOTE 18.	RRP				4-27-06
0	ISSUED FOR PERMITTING USE.	RR	NJ	EI JP	TV	3-29-05

REVISION HISTORY

ISSUED BY RPP-WTP PDC		
PROJECT No.	24590	
SITE	HANFORD	
AREA	200E	
BUILDING No.	30	
ISSUE STAMP		

	BY	DATE
ORIGINATOR	R RUSSELL	3-29-05
CHECKER	N JOHNSON	3-29-05
APPROVER	T VALENTINO	3-29-05
REVIEWER	J PULLEN	3-29-05

CONTENT APPLICABLE TO ALARA? [X] YES [ ] NO
ADR NO. N/A REV:
SAFETY SCREEN REQUIRED? [ ] YES [X] NO EMS INITIAL IF YES

BECHTEL

RIVER PROTECTION PROJECT
WASTE TREATMENT PLANT
2435 STEVENS CENTER PLACE
RICHLAND, WA 99354

CONTRACT No: DE-AC27-01RV14136

PROCESS FLOW DIAGRAM HLW VITRIFICATION MELTER 1 (SYSTEMS HMP AND HOP)

SCALE: NTS

24590-HLW-M5-V17T-P0002

REV 1

SAFETY SCREEN IS REQUIRED FOR DRAWING TYPES IDENTIFIED IN 24590-WTP-GPP-SREG-002

'E' SIZE - 44x34
COMPUTER GENERATED - MANUAL CHANGES NOT PERMITTED

R10673837

04/26/2006 02:56:02 PM

PLOTTED BY: rrussel
C:\Work\dms06004\24590-HLW-M5-V17T-P0002.dgn

FORM E_SDN.DGN 02/2003

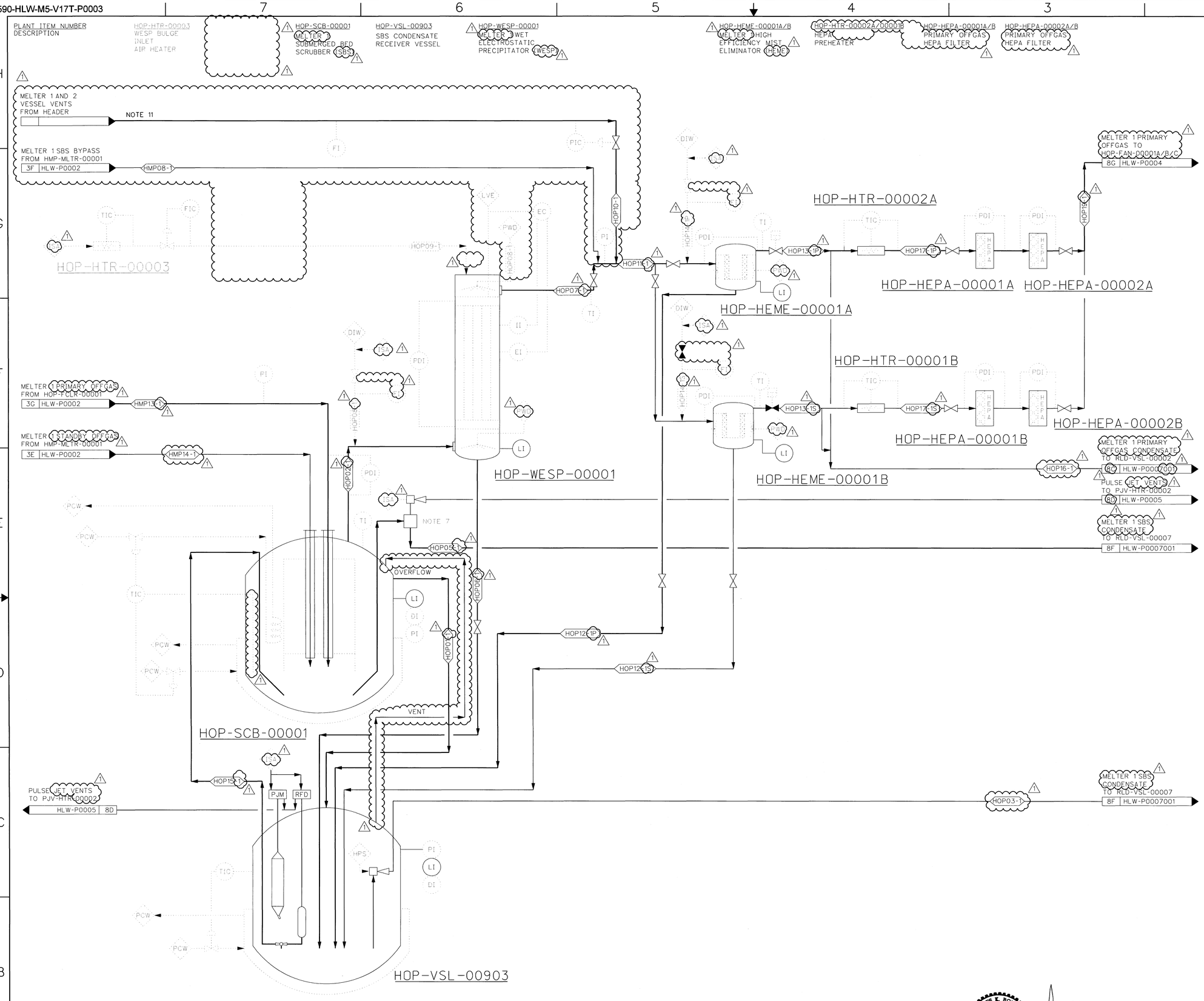

NOTES:

1. SEE DRAWING 24590-WTP-M5-V17T-P0001 FOR SYMBOLS AND LEGEND.
2. MAJOR INDICATION AND CONTROL INSTRUMENTATION ONLY SHOWN
3. VALVES SHOWN ONLY TO INDICATE PROCESS INTENT
4. DELETED
5. DELETED
6. DELETED
7. ACCUMULATED CONDENSATE IN THE SBS SYSTEM SHALL BE ROUTINELY TRANSFERRED USING A AIR EJECTOR INDUCED SIPHON.
8. DELETED
9. CONTENTS OF THIS DOCUMENT ARE DANGEROUS WASTE PERMIT AFFECTING
10. DELETED
11. ALL VENTED EQUIPMENT HAVE THE CAPABILITY TO VENT TO EITHER MELTER 1 OR MELTER 2 VESSEL VENT HEADER.
12. THE PORTIONS OF THIS DRAWING SHOWN IN PHANTOM ARE CONSIDERED NON-PERMIT AFFECTING AND ARE NOT SUBJECT TO THE REGULATORY REQUIREMENTS OF THE WAC CODE FOR THE DANGEROUS WASTE PERMIT TO THE EXTENT THAT THOSE PORTIONS DO NOT IMPACT DANGEROUS WASTE AREAS/OPERATIONS.

REFERENCES:

1. 24590-HLW-3YD-HOP-00001, SYSTEMS DESCRIPTION FOR HLW MELTER OFFGAS TREATMENT PROCESS AND PROCESS VESSEL VENT EXTRACTION (HOP AND PVV SYSTEMS).
2. DELETED
3. DELETED
4. DELETED
5. DELETED
6. DELETED
7. DELETED
8. DELETED
9. DELETED
10. DELETED
11. DELETED
12. DELETED
13. DELETED
14. DELETED
15. DELETED
16. DELETED

PLEASE NOTE THAT SOURCE, SPECIAL NUCLEAR AND BYPRODUCT MATERIALS, AS DEFINED IN THE ATOMIC ENERGY ACT OF 1954 (AEA), ARE REGULATED AT THE U.S. DEPARTMENT OF ENERGY (DOE) FACILITIES EXCLUSIVELY BY DOE ACTING PURSUANT TO ITS AEA AUTHORITY. DOE ASSERTS, THAT PURSUANT TO THE AEA, IT HAS SOLE AND EXCLUSIVE RESPONSIBILITY AND AUTHORIY TO REGULATE SOURCE, SPECIAL NUCLEAR, AND BYPRODUCT MATERIALS AT DOE-OWNED NUCLEAR FACILITIES. INFORMATION CONTAINED HEREIN ON RADIONUCLIDES IS PROVIDED FOR PROCESS DESCRIPTION PURPOSES ONLY.

JAMES K. ROUSSEL
STATE OF WASHINGTON
33012
REGISTERED
PROFESSIONAL ENGINEER
EXPIRES: 3/5/06

REV	DESCRIPTION	ORG	CHKD	RVWD	APVD	DATE
1	ISSUED FOR PERMITTING USE					3/24/05
0	ISSUED FOR PERMITTING USE	KC	SR		AGD SCF	12-11-02

REVISION HISTORY

ISSUED BY RPP-WTP PDC

PROJECT No.	24590	
SITE	HANFORD	
AREA	200E	
BUILDING No.		
	BY	DATE
ORIGINATOR	KEN CRAMER	12-9-02
CHECKER	SCOTT ROSSELL	12-9-02
APPROVER	STEVE FOELBER	12-11-02
REVIEWER		

ISSUE STAMP

CONTENT APPLICABLE TO ALARA? [X] YES [ ] NO
ADR NO. N/A REV:

RIVER PROTECTION PROJECT
WASTE TREATMENT PLANT
2435 STEVENS CENTER PLACE
RICHLAND, WA 99352

CONTRACT No: DE-AC27-01RV14136

PROCESS FLOW DIAGRAM HLW VIT PRIMARY OFFGAS TREATMENT (SYSTEM HOP)

SCALE: NTS

24590-HLW-M5-V17T-P0003

REV 1

"E" SIZE - 44x34
COMPUTER GENERATED - MANUAL CHANGES NOT PERMITTED

R10522861

03/23/2005 09:48:19 AM

PLOTTED BY: rrrussel
C:\Work\sms06004\24590-HLW-M5-V17T-P0003.dgn

FORM E_SDN.DGN 02/2003

24590-HLW-M5-V17T-P0004

PLANT ITEM NUMBER / DESCRIPTION	
HOP-FAN-00001A/B/C	BOOSTER EXTRACTION FAN
HOP-ABS-00002	SILVER MORDENITE COLUMN
HOP-ADBR-00001A/B	ACTIVATED CARBON ADSORBER
HOP-HX-00001	CATALYST SKID PREHEATER
HOP-HX-00002	SILVER MORDENITE PREHEATER
HOP-HTR-00001	CATALYST SKID ELECTRIC HEATER
HOP-FAN-00008A/B/C	STACK EXTRACTION FAN
HOP-SCO-00001	THERMAL CATALYTIC OXIDIZER
HOP-SCO-00002	CATALYST SKID
HOP-SCR-00001	NOx SELECTIVE CATALYTIC REDUCER

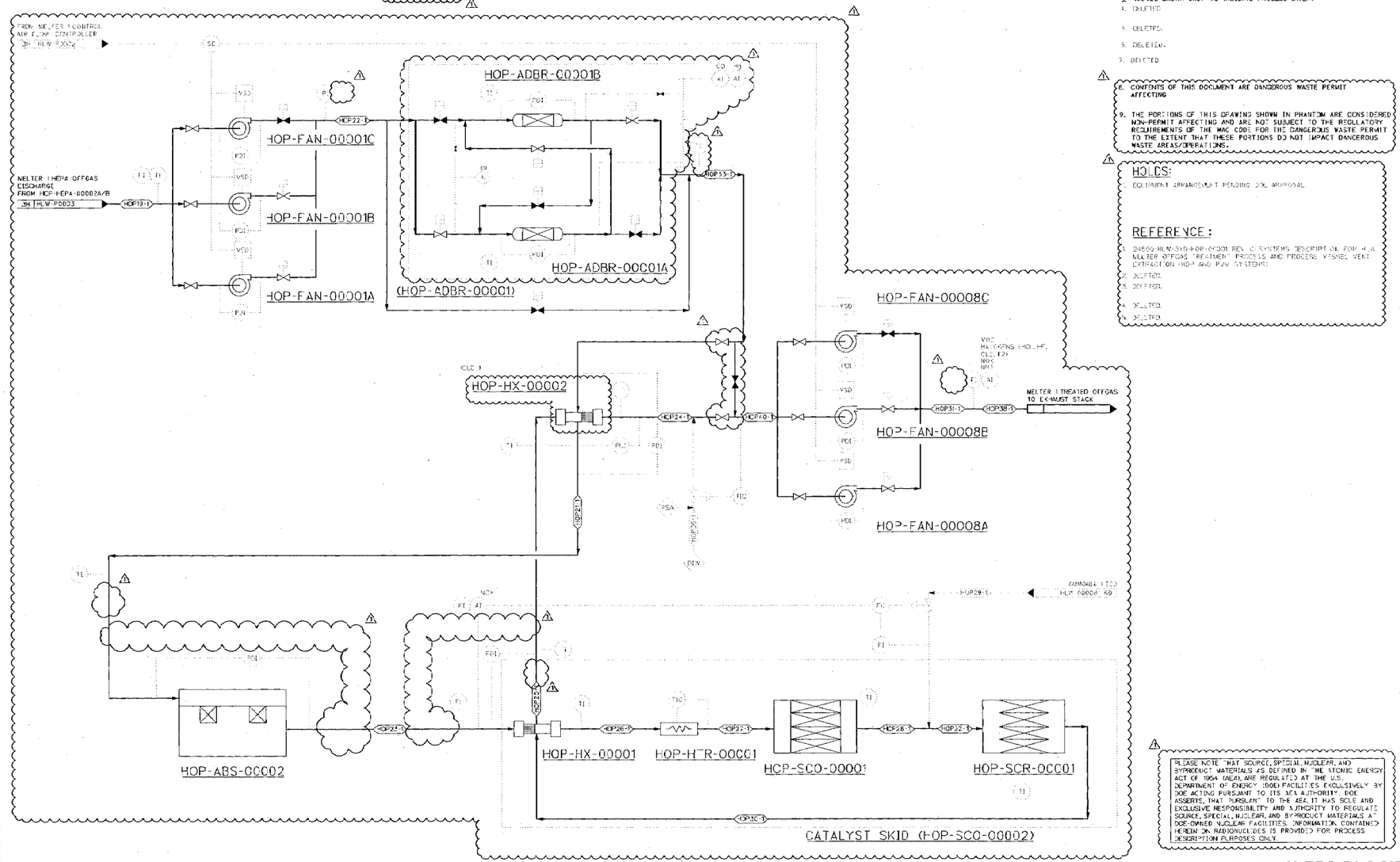

NOTES:

1. SEE DRAWING 24590-PTF-M5-V17T-P0001 FOR SYMBOLS AND LEGEND.
2. MAJOR INDICATION AND CONTROL INSTRUMENTATION ONLY SHOWN
3. VALVES SHOWN ONLY TO INDICATE PROCESS INTENT
4. DELETED.
5. DELETED.
6. DELETED.
7. DELETED
8. CONTENTS OF THIS DOCUMENT ARE DANGEROUS WASTE PERMIT AFFECTING
9. THE PORTIONS OF THIS DRAWING SHOWN IN PHANTOM ARE CONSIDERED NON-PERMIT AFFECTING AND ARE NOT SUBJECT TO THE REGULATORY REQUIREMENTS OF THE WAC CODE FOR THE DANGEROUS WASTE PERMIT TO THE EXTENT THAT THESE PORTIONS DO NOT IMPACT DANGEROUS WASTE AREAS/OPERATIONS.

HOLDS:

1. EQUIPMENT ARRANGEMENT PENDING DOE APPROVAL

REFERENCE:

1. 24590-HLW-STD-HOP-00001 REV. 0 SYSTEMS DESCRIPTION FOR HLW MELTER OFFGAS TREATMENT PROCESS AND PROCESS VESSEL VENT EXTRACTION (HOP AND PVV SYSTEMS)
2. DELETED.
3. DELETED.
4. DELETED.
5. DELETED.

PLEASE NOTE THAT SOURCE, SPECIAL, NUCLEAR, AND BYPRODUCT MATERIALS AS DEFINED IN THE ATOMIC ENERGY ACT OF 1954 (AEA) ARE REGULATED AT THE U.S. DEPARTMENT OF ENERGY (DOE) FACILITIES EXCLUSIVELY BY DOE ACTING PURSUANT TO ITS AEA AUTHORITY. DOE ASSERTS THAT PURSUANT TO THE AEA IT HAS SOLE AND EXCLUSIVE RESPONSIBILITY AND AUTHORITY TO REGULATE SOURCE, SPECIAL, NUCLEAR, AND BY-PRODUCT MATERIALS AT DOE-OWNED NUCLEAR FACILITIES. INFORMATION CONTAINED HEREIN ON RADIONUCLIDES IS PROVIDED FOR PROCESS DESCRIPTION PURPOSES ONLY.

REV	DESCRIPTION	ORG	CHKD	PVWD	APVD	DATE
1	ISSUED FOR PERMITTING USE					1-22-04
0	ISSUED FOR PERMITTING USE	EC	SR		SF A22	12/18/02

REVISION HISTORY

	BY	DATE
ORIGINATOR	K. CRAGER	12/9/2002
CHECKER	S. RASELLI	12/9/2002
APPROVER	S. FIELDER	12/9/2002
REVIEWER		

CONTENT APPLICABLE TO ALARA? ☐ YES ☐ NO
AOE NO.

RIVER PROTECTION PROJECT
WASTE TREATMENT PLANT
2435 STEVENS CENTER PLACE
RICHLAND, WA 99352

CONTRACT No: DE-AC27-01RV14136

PROCESS FLOW DIAGRAM
HLW VITRIFICATION
MELTER 1
SECONDARY OFFGAS TREATMENT (SYSTEM HOP)

SCALE: NTS
24590-HLW-M5-V17T-P0004
REV 1

01/22/2004 01:41:04 PM

PLANT ITEM NUMBER DESCRIPTION	PJV-HTR-00002 PULSE VENTILATION HEPA ELECTRIC PREHEATER	PJV-HEPA-00004A/B PJV-HEPA-00005A/B PJV SYSTEM HEPA FILTERS	PJV-FAN-00002A/B PULSE VENT EXTRACTION FANS

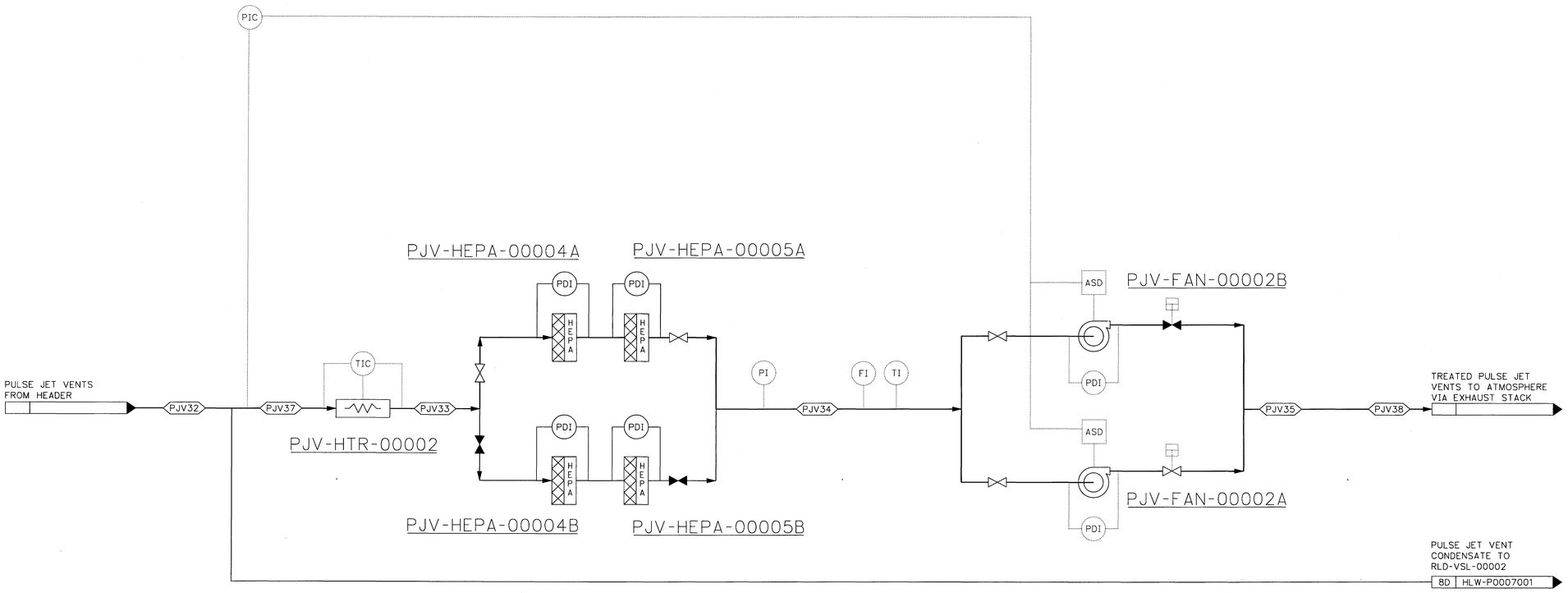

NOTES:

1. SEE DRAWING 24590-WTP-M5-V17T-P0001 FOR LEGEND AND SYMBOLS.
2. MAJOR INDICATION AND CONTROL INSTRUMENTATION ONLY SHOWN
3. VALVES SHOWN ONLY TO INDICATE PROCESS INTENT
4. DELETED
5. DELETED
6. DELETED
7. DELETED
8. DELETED
9. CONTENTS OF THIS DOCUMENT ARE WASTE PERMIT AFFECTING.
10. THE PORTIONS OF THIS DRAWING SHOWN IN PHANTOM ARE CONSIDERED NON-PERMIT AFFECTING AND ARE NOT SUBJECT TO THE REGULATORY REQUIREMENTS OF THE WAC CODE FOR THE DANGEROUS WASTE PERMIT TO THE EXTENT THAT THOSE PORTIONS DO NOT IMPACT DANGEROUS WASTE AREAS/OPERATIONS.

REFERENCE:

1. 24590-HLW-3YD-PJV-00001, REV 0, SYSTEM DESCRIPTION FOR THE HLW PULSE JET VENTILATION SYSTEM (SYSTEM PJV)
2. DELETED.
3. DELETED.
4. DELETED.
5. DELETED.
6. DELETED.
7. DELETED.
8. DELETED.
9. DELETED.
10. DELETED.
11. DELETED.
12. DELETED.

PLEASE NOTE THAT SOURCE, SPECIAL NUCLEAR, AND BYPRODUCT MATERIALS, AS DEFINED IN THE ATOMIC ENERGY ACT OF 1954 (AEA), ARE REGULATED AT THE U.S. DEPARTMENT OF ENERGY (DOE) FACILITIES EXCLUSIVELY BY DOE ACTING PURSUANT TO ITS AEA AUTHORITY. DOE ASSERTS, THAT PURSUANT TO THE AEA, IT HAS SOLE AND EXCLUSIVE RESPONSIBILITY AND AUTHORITY TO REGULATE SOURCE, SPECIAL NUCLEAR, AND BYPRODUCT MATERIALS AT DOE-OWNED NUCLEAR FACILITIES. INFORMATION CONTAINED HEREIN ON RADIONUCLIDES IS PROVIDED FOR PROCESS DESCRIPTION PURPOSES ONLY.

REVISION HISTORY

REV	DESCRIPTION	ORG	CHKD	RVWD	APVD	DATE
0	ISSUED FOR PERMITTING USE					10-12-04

ISSUED BY RPP-WTP PDC

ISSUE STAMP

PROJECT No.	24590	
SITE	HANFORD	
AREA	200E	
BUILDING No.	30	
	BY	DATE
ORIGINATOR		10/12/04
CHECKER		10/12/04
APPROVER		10-12-04
REVIEWER		10/12/04

CONTENT APPLICABLE TO ALARA? [X] YES [ ] NO
ADR NO. N/A REV:

RIVER PROTECTION PROJECT
WASTE TREATMENT PLANT
2435 STEVENS CENTER PLACE
RICHLAND, WA 99352

CONTRACT No: DE-AC27-01RV14136

PROCESS FLOW DIAGRAM HLW VITRIFICATION PULSE JET VENTILATION TREATMENT (SYSTEM PJV)

SCALE: NTS
24590-HLW-M5-V17T-P0005
REV 0

'E' SIZE - 44x34
COMPUTER GENERATED - MANUAL CHANGES NOT PERMITTED

10/12/2004 07:44:12 AM

PLOTTED BY: rrrussell
C:\Work\dms0500A\24590-HLW-M5-V17T-P0005.dgn

FORM E_SDN.DGN 02/2003

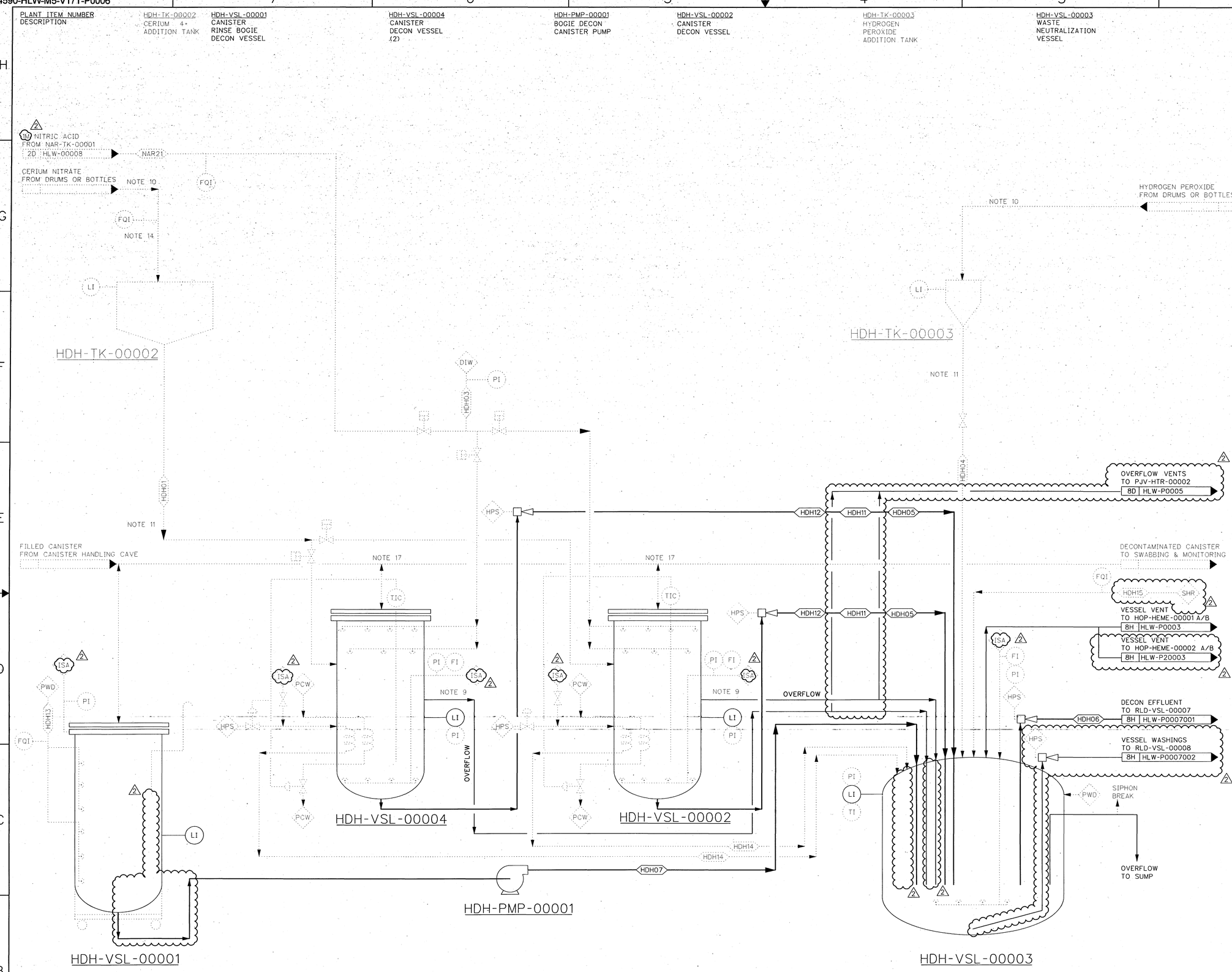

NOTES:

1. SEE DRAWING 24590-WTP-M5-V17T-P0001 FOR SYMBOLS AND LEGEND
2. MAJOR INDICATION AND CONTROL INSTRUMENTATION ONLY SHOWN
3. VALVES SHOWN ONLY TO INDICATE PROCESS INTENT
4. DELETED
5. DELETED.
6. DELETED
7. DELETED.
8. DELETED.
9. DURING NORMAL OPERATION, EACH CANISTER DECONTAMINATION VESSELS' OVERFLOW ACTS AS AN INTENTIONAL VENT PATH WHEN THE VESSEL CONTAINMENT LID IS OPEN. THE VENT PATH GENERATES AN AIR SWEEP TO MINIMIZE CONTAMINATION SPREAD DURING CANISTER INSERTION AND REMOVAL. HOWEVER, IT WILL GENERATE A SHORT, BUT SIGNIFICANT, INCREASE IN VESSEL VENTILATION GAS FLOW.
10. CERIUM NITRATE AND 30 WT% HYDROGEN PEROXIDE SOLUTIONS ARE MANUALLY LOADED.
11. HDH01 AND HDH04 ARE GRAVITY TRANSFERS
12. CONTENTS OF THIS DOCUMENT ARE DANGEROUS WASTE PERMIT AFFECTING.
13. DELETED.
14. LOCAL FLOW TOTALIZER WILL BE INSTALLED ON THE PORTABLE TRANSFER LINE CONNECTING HDH-TK-00002 TO A CERIUM STORAGE DRUM.
15. DELETED.
16. DELETED.
17. EACH CANISTER ENTERS ONLY ONE OF THE CANISTER DECON VESSELS (HDH-VSL-00002/4) DURING THE DECONTAMINATION PROCESS.
18. THE PORTIONS OF THIS DRAWING SHOWN IN PHANTOM ARE CONSIDERED NON-PERMIT AFFECTING AND ARE NOT SUBJECT TO THE REGULATORY REQUIREMENTS OF THE WAC CODE FOR THE DANGEROUS WASTE PERMIT TO THE EXTENT THAT THOSE PORTIONS DO NOT IMPACT DANGEROUS WASTE AREAS/OPERATIONS.

REFERENCES:

1. DELETED.
2. DELETED.
3. DELETED.
4. DELETED.
5. DELETED.
6. DELETED.
7. DELETED.
8. DELETED.
9. DELETED.
10. DELETED.
11. DELETED.

PLEASE NOTE THAT SOURCE, SPECIAL NUCLEAR, AND BYPRODUCT MATERIALS, AS DEFINED IN THE ATOMIC ENERGY ACT OF 1954 (AEA), ARE REGULATED AT THE U.S. DEPARTMENT OF ENERGY (DOE) FACILITIES EXCLUSIVELY BY DOE ACTING PURSUANT TO ITS AEA AUTHORITY. DOE ASSERTS, THAT PURSUANT TO THE AEA, IT HAS SOLE AND EXCLUSIVE RESPONSIBILITY AND AUTHORITY TO REGULATE SOURCE, SPECIAL NUCLEAR, AND BYPRODUCT MATERIALS AT DOE-OWNED NUCLEAR FACILITES. INFORMATION CONTAINED HEREIN ON RADIONUCLIDES IS PROVIDED FOR PROCESS DESCRIPTION PURPOSES ONLY.

REV	DESCRIPTION	ORG	CHKD	RVWD	APVD	DATE
2	ISSUED FOR PERMITTING USE					3.22.05
1	ISSUED FOR PERMITTING USE	RR	NJ	JP	JFS	2-5-04
0	ISSUED FOR PERMITTING USE	RR	SC	AD	GD	10-4-02

REVISION HISTORY

ISSUED BY RPP-WTP PDC

ISSUE STAMP

PROJECT No.	24590
SITE	HANFORD
AREA	200E
BUILDING No.	30

JAMES K. ROSSE, STATE OF WASHINGTON, REGISTERED PROFESSIONAL ENGINEER
EXPIRES: 3/5/06

	BY	DATE
ORIGINATOR	R. RUSSELL	10/3/02
CHECKER	S. COLBY	10/3/02
APPROVER	G. DUNCAN	10/4/02
REVIEWER		

CONTENT APPLICABLE TO ALARA? [X] YES [ ] NO
ADR NO. N/A REV:

BECHTEL

RIVER PROTECTION PROJECT
WASTE TREATMENT PLANT
2435 STEVENS CENTER PLACE
RICHLAND, WA 99352

CONTRACT No: DE-AC27-01RV14136

PROCESS FLOW DIAGRAM
HLW VITRIFICATION
HLW CANISTER DECON
(SYSTEM HDH)

SCALE: NTS

24590-HLW-M5-V17T-P0006

REV 2

'E' SIZE - 44x34
COMPUTER GENERATED - MANUAL CHANGES NOT PERMITTED

R10520465

03/15/2005 01:57:24 PM

PLOTTED BY: rrussel
C:\Work\dms0600A\24590-HLW-M5-V17T-P0006.dgn

FORM E_SDN.DGN 02/2003

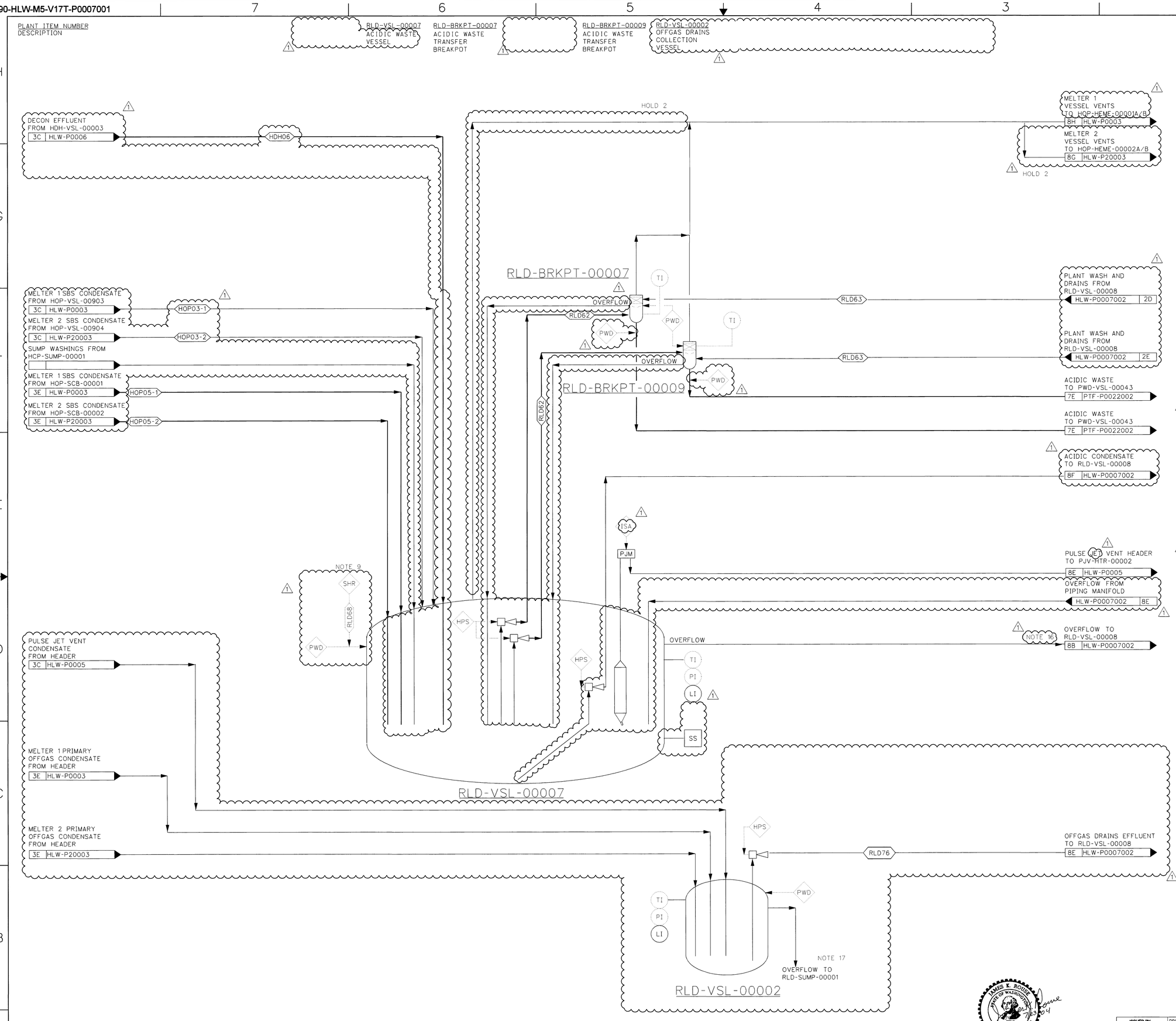

NOTES:

1. SEE DRAWING 24590-WTP-M5-V17T-P0001 FOR LEGEND AND SYMBOLS.
2. MAJOR INDICATION AND CONTROL INSTRUMENTATION ONLY SHOWN
3. VALVES SHOWN ONLY TO INDICATE PROCESS INTENT
4. DELETED.
5. DELETED.
6. DELETED.
7. ALL VESSELS WILL BE FITTED WITH INTERNAL WASH RING FOR DECONTAMINATION PURPOSES.
8. DELETED.
9. SODIUM HYDROXIDE ADDED TO TANKS VIA TANK WASH LINES.
10. DELETED.
11. DELETED.
12. DELETED.
13. CONTENTS OF THIS DOCUMENT ARE DANGEROUS WASTE PERMIT AFFECTING.
14. DELETED.
15. DELETED.
16. DURING NORMAL OPERATIONS, RLD-VSL-00008 VENTS THROUGH THE OVERFLOW LINE FROM RLD-VSL-00007. HYDROGEN PURGE AIR IS CASCADED FROM RLD-VSL-00008 DURING NORMAL OPERATIONS.
17. VESSEL VENTS THROUGH ITS OVERFLOW TO THE C5 CAVE.
18. THE PORTIONS OF THIS DRAWING SHOWN IN PHANTOM ARE CONSIDERED NON-PERMIT AFFECTING AND ARE NOT SUBJECT TO THE REGULATORY REQUIREMENTS OF THE WAC CODE FOR THE DANGEROUS WASTE PERMIT TO THE EXTENT THAT THOSE PORTIONS DO NOT IMPACT DANGEROUS WASTE AREAS/OPERTIONS.

HOLDS:

1. DELETED.
2. HYDROGEN MITIGATION CHANGES PENDING DOE APPROVAL.

REFERENCE:

1. 24590-HLW-3YD-RLD-00001, REV 0: SYSTEM DESCRIPTION FOR HLW RADIOACTIVE LIQUID WASTE DISPOSAL (SYSTEM RLD)
2. DELETED.
3. DELETED.
4. DELETED.
5. DELETED.
6. DELETED.
7. DELETED.

PLEASE NOTE THAT SOURCE, SPECIAL NUCLEAR, AND BYPRODUCT MATERIALS, AS DEFINED IN THE ATOMIC ENERGY ACT OF 1954 (AEA), ARE REGULATED AT THE U.S. DEPARTMENT OF ENERGY (DOE) FACILITIES EXCLUSIVELY BY DOE ACTING PERSUANT TO ITS AEA AUTHORITY. DOE ASSERTS, THAT PERSUANT TO THE AEA, IT HAS SOLE AND EXCLUSIVE RESPONSIBILITY AND AUTHORITY TO REGULATE SOURCE, SPECIAL NUCLEAR, AND BYPRODUCT MATERIALS AT DOE-OWNED NUCLEAR FACILITIES. INFORMATION CONTAINED HEREIN ON RADIONUCLIDES IS PROVIDED FOR PROCESS DESCRIPTION PURPOSES ONLY.

DRAWING INDEX

DWG NO	REV	TITLE
24590-HLW-M5-V17T-P0007001	1	PROCESS FLOW DIAGRAM HLW VITRIFICATION LIQUID WASTE EFFLUENT (SYSTEM RLD) (SHEET 1)
24590-HLW-M5-V17T-P0007002	1	PROCESS FLOW DIAGRAM HLW VITRIFICATION LIQUID WASTE EFFLUENT (SYSTEM RLD) (SHEET 2)

REVISION HISTORY

REV	DESCRIPTION	ORG	CHKD	RVWD	APVD	DATE
1	ISSUED FOR PERMITTING USE.					7/23/04
0	ISSUED FOR PERMITTING USE.	SR	CB	AGD	SCF	11-5-02

R1234136

JAMES K. ROUSE, STATE OF WASHINGTON, 33973, REGISTERED PROFESSIONAL ENGINEER, 7/23/04
EXPIRES: 2/5/06

ISSUED BY RPP-WTP PDC
INIT DATE
ISSUE STAMP

PROJECT No.	24590	
SITE	HANFORD	
AREA	200E	
BUILDING No.	30	

	BY	DATE
ORIGINATOR	ROSSELL, SCOTT	10-30-02
CHECKER	BOGAERTS, CHRISTINE	10-31-02
APPROVER	FOELBER, STEVEN	11-5-02
REVIEWER		

CONTENT APPLICABLE TO ALARA? [X] YES [ ] NO
ADR NO. N/A REV:

BECHTEL
RIVER PROTECTION PROJECT
WASTE TREATMENT PLANT
2435 STEVENS CENTER PLACE
RICHLAND, WA 99352

CONTRACT No: DE-AC27-01RV14136

PROCESS FLOW DIAGRAM HLW VITRIFICATION LIQUID WASTE EFFLUENT (SYSTEM RLD) (SHEET 1)

SCALE: NTS
24590-HLW-M5-V17T-P0007001
REV 1

'E' SIZE - 44x34
COMPUTER GENERATED - MANUAL CHANGES NOT PERMITTED

FORM E_SDN.DGN 02/2003

07/22/2004 01:33:33 PM
PLOTTED BY: rrrussel
C:\Work\dms06014\24590-HLW-M5-V17T-P0007001.dgn

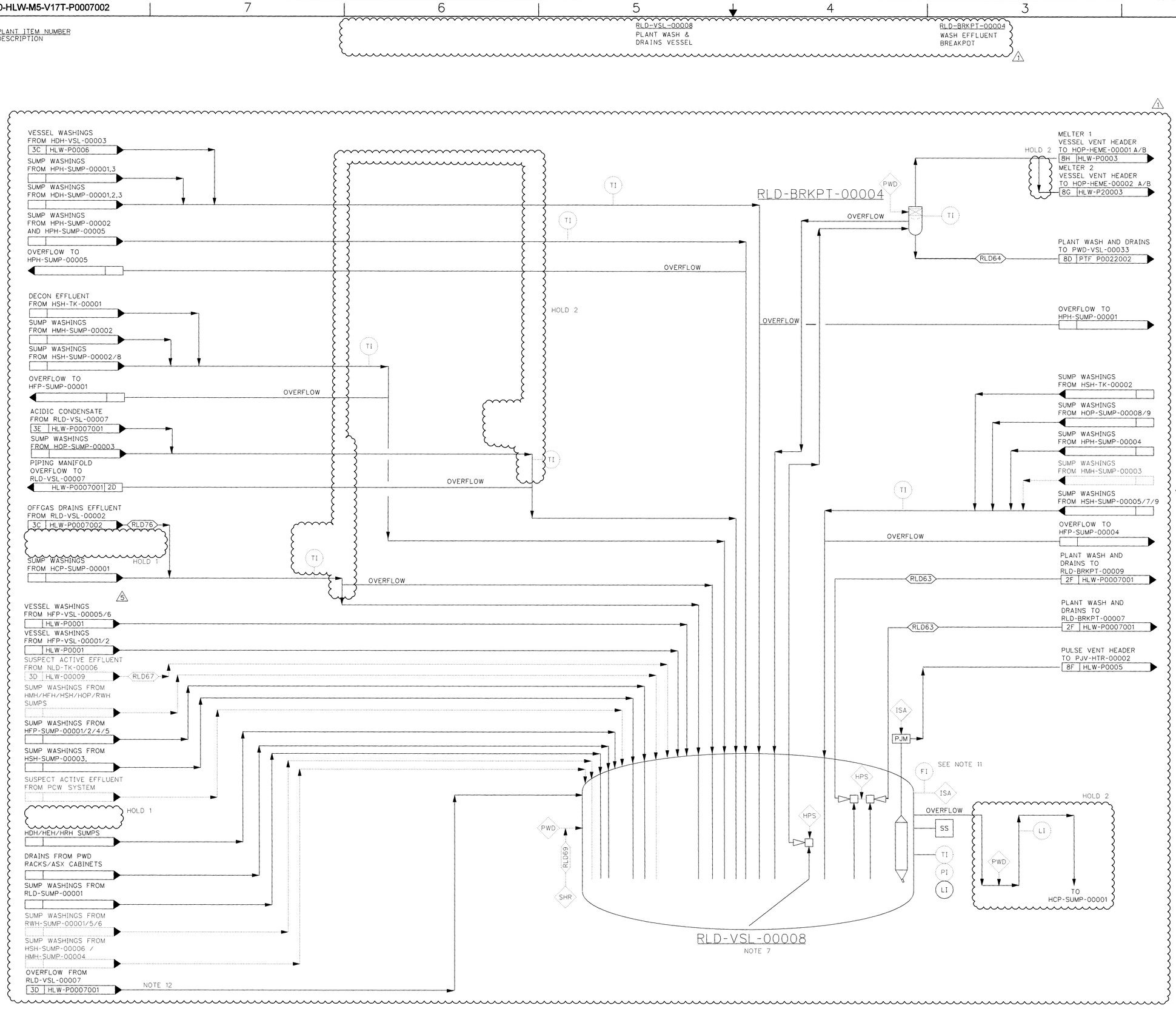

NOTES:

1. SEE DRAWING 24590-WTP-M5-V17T-P0001 FOR LEGEND AND SYMBOLS.
2. MAJOR INDICATION AND CONTROL INSTRUMENTATION ONLY SHOWN
3. VALVES SHOWN ONLY TO INDICATE PROCESS INTENT
4. DELETED
5. DELETED.
6. DELETED.
7. DELETED.
8. DELETED.
9. CONTENTS OF THIS DOCUMENT ARE WASTE PERMIT AFFECTING.
10. DELETED.
11. INSTRUMENT AIR ADDED TO VESSEL FOR HYDROGEN MITIGATION.
12. DURING NORMAL OPERATION, RLD-VSL-00008 VENTS THROUGH THE OVERFLOW LINE FROM RLD-VSL-00007.
13. THE PORTIONS OF THIS DRAWING IN PHANTOM ARE CONSIDERED NON-PERMIT AFFECTING AND ARE NOT SUBJECT TO THE REGULATORY REQUIREMENTS OF THE WAC CODE FOR THE DANGEROUS WASTE PERMIT TO THE EXTENT THAT THOSE PORTIONS DO NOT IMPACT DANGEROUS WASTE AREAS/OPERATIONS.

HOLDS:

1. CRV DELETION CHANGES PENDING DOE APPROVAL.
2. HYDROGEN MITIGATION CHANGES PENDING DOE APPROVAL.

REFERENCES:

1. 24590-HLW-3YD-RLD-00001, REV 0: SYSTEM DESCRIPTION FOR HLW RADIOACTIVE LIQUID WASTE DISPOSAL (SYSTEM RLD)
2. DELETED.
3. DELETED.
4. DELETED.
5. DELETED.
6. DELETED.

PLEASE NOTE THAT SOURCE, SPECIAL NUCLEAR, AND BYPRODUCT MATERIALS, AS DEFINED IN THE ATOMIC ENERGY ACT OF 1954 (AEA), ARE REGULATED AT THE U.S. DEPATMENT OF ENERGY (DOE) FACILITIES EXCLUSIVELY BY DOE ACTING PURSUANT TO ITS AEA AUTHORITY. DOE ASSERTS, THAT PURSUANT TO THE AEA, IT HAS SOLE AND EXCLUSIVE RESPONSIBILITY AND AUTHORITY TO REGULATE SOURCE, SPECIAL NUCLEAR, AND BYPRODUCT MATERIALS AT DOE-OWNED NUCLEAR FACILITIES. INFORMATION CONTAINED HEREIN ON RADIONUCLIDES IS PROVIDED FOR PROCESS DESCRIPTION PURPOSES ONLY.

REV	DESCRIPTION	ORG	CHKD	RVWD	APVD	DATE
1	ISSUED FOR PERMITTING USE.					7/23/04
0	ISSUED FOR PERMITTING USE.	SR	CB	AGD	SCF	11-05-02

REVISION HISTORY

JAMES K. ROUSSE, STATE OF WASHINGTON, 33510, REGISTERED PROFESSIONAL ENGINEER, 7-23-04
EXPIRES: 3/5/06

ISSUED BY RPP-WTP PDC
INIT. DATE
ISSUE STAMP

	BY	DATE
ORIGINATOR	ROSSELL, SCOTT	10-30-02
CHECKER	BOGAERTS, CHRISTINE	10-31-02
APPROVER	FOELBER, STEVEN	11-05-02
REVIEWER		

CONTENT APPLICABLE TO ALARA? [X] YES [ ] NO
ADR NO. N/A REV:

PROJECT No.	24590
SITE	HANFORD
AREA	200E
BUILDING No.	30

RIVER PROTECTION PROJECT
WASTE TREATMENT PLANT
2435 STEVENS CENTER PLACE
RICHLAND, WA 99352

CONTRACT No: DE-AC27-01RV14136

PROCESS FLOW DIAGRAM HLW VITRIFICATION LIQUID WASTE EFFLUENT (SYSTEM RLD) (SHEET 2)

SCALE: NTS
24590-HLW-M5-V17T-P0007002
REV 1

'E' SIZE - 44x34
COMPUTER GENERATED - MANUAL CHANGES NOT PERMITTED

FORM E_SDN.DGN 02/2003

07/22/2004 01:34:59 PM
PLOTTED BY: rrrussel
C:\Work\dms05004\24590-HLW-M5-V17T-P0007002.dgn

R0304040

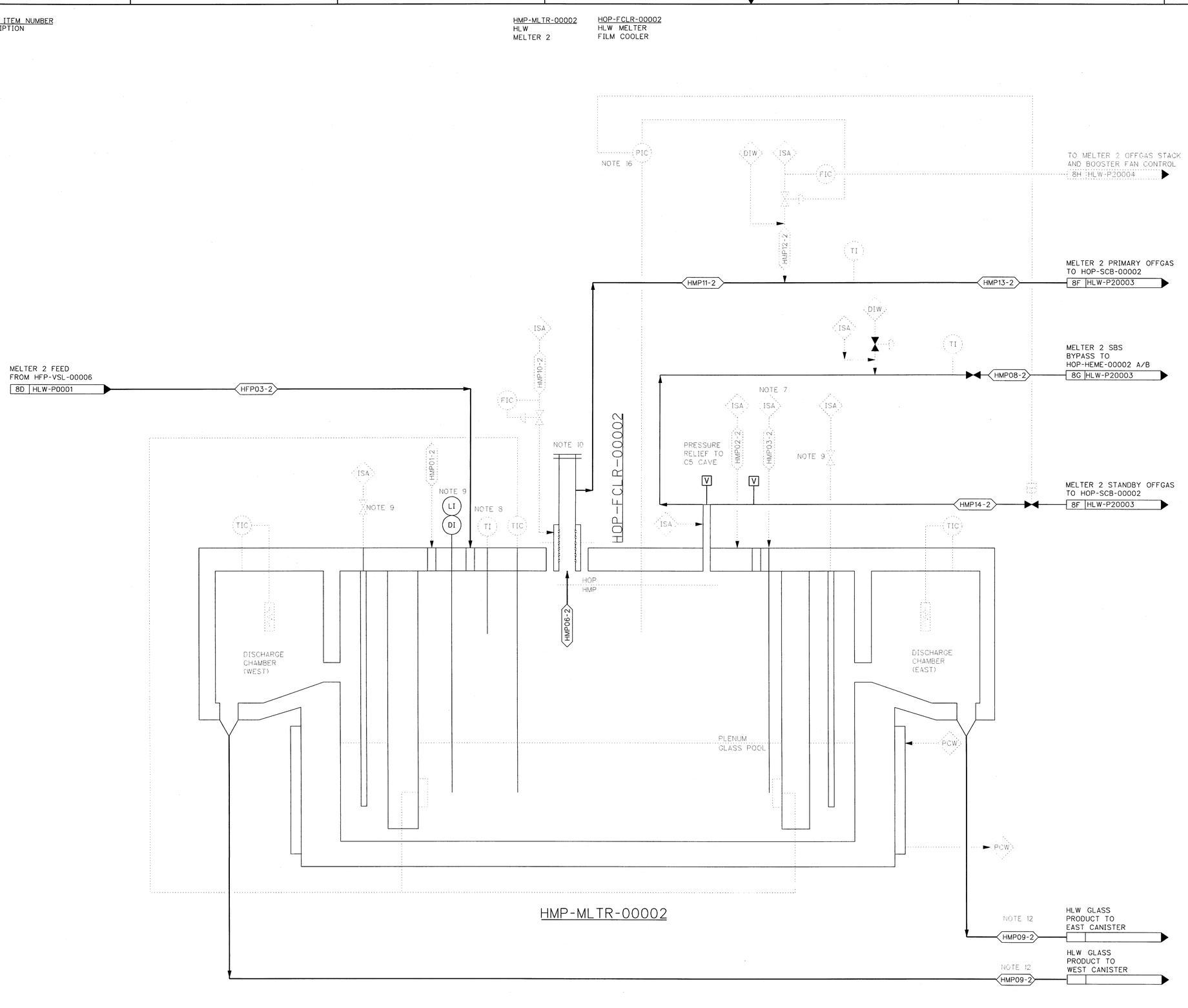

NOTES:

1. SEE DRAWING 24590-WTP-M5-V17T-P0001 FOR LEGEND AND SYMBOLS.
2. MAJOR INDICATION AND CONTROL INSTRUMENTATION ONLY SHOWN
3. VALVES SHOWN ONLY TO INDICATE PROCESS INTENT
4. DELETED
5. DELETED
6. EQUIPMENT INFORMATION PROVIDED PER MELTER DATASHEET.
7. INSTRUMENT AIR SERVICES AND ACCOMMODATIONS ARE PROVIDED FOR GLASS AGITATION BUBBLERS TO INCREASE MELTER CAPACITY.
8. PLENUM TEMPERATURE INDICATION IS USED TO MANUALLY CONTROL THE ADS PUMP OPERATION IN CONJUNCTION WITH DESIRED GLASS PRODUCTION AND ADJUSTMENTS TO GLASS AGITATION BUBBLING RATES.
9. GLASS LEVEL INDICATION IS USED TO MANUALLY CONTROL THE GLASS AIRLIFT DISCHARGE.
10. PROVISIONS WILL BE MADE FOR THE INSTALLATION OF A FILM COOLER CLEANER IF NECESSARY.
11. DELETED
12. GLASS PRODUCT IS SEMI-CONTINUOUSLY DISCHARGED FROM THE MELTER BASED ON GLASS LEVEL IN MELTER AND/OR FILL HEIGHT IN CANISTER.
13. BATCH CAPACITY REFERS TO VESSELS AND TANKS ONLY. OPERATING CAPACITY REFERS TO ALL OTHER EQUIPMENT.
14. DELETED.
15. CONTENTS OF THIS DOCUMENT ARE DANGEROUS WASTE PERMIT AFFECTING.
16. THE STANDBY OFFGAS JUMPER IS CLOSED DURING NORMAL OPERATIONS, BUT WILL AUTOMATICALLY OPEN UPON LOSS OF A SIGNIFICANT AMOUNT OF MELTER PLENUM VACUUM.
17. THE PORTIONS OF THIS DRAWING SHOWN IN PHANTOM ARE CONSIDERED NON-PERMIT AFFECTING AND ARE NOT SUBJECT TO THE REGULATORY REQUIREMENTS OF THE WAC CODE FOR THE DANGEROUS WASTE PERMIT TO THE EXTENT THAT THOSE PORTIONS DO NOT IMPACT DANGEROUS WASTE AREAS/OPERATIONS
18. THE FOLLOWING CHANGES WERE INCORPORATED INTO THIS DRAWING REVISION: PERMITTED SELECTED MELTER INTERNALS, CONTROL STRATEGY SIMPLIFICATION, ADDED SECOND MELTER FLAPPER VALVE, CHANGED FLAPPER VALVE SYMBOL, PERMITTED COOLING PANELS, AND ADDED NOTES AND REFERENCES.

REFERENCES:

1. 24590-HLW-3YD-HMP-00001: SYSTEM DESCRIPTION FOR HLW MELTER PROCESS SYSTEM (HMP).
2. 24590-WTP-RPT-PR-01-008: PROCESS STREAM NUMBERS.
3. 24590-WTP-RPT-ENG-02-009: SYSTEM AND AREA LOCATORS LIST AND SYSTEM DIVISION OF RESPONSIBILITY.
4. 24590-WTP-RPT-ENG-02-010: COMPONENT IDENTIFIERS LIST.
5. 24590-WTP-3DP-G03B-00044: STANDARD COMPONENT NUMBERING.
6. 24590-HLW-M0D-HMP-P0002: 24590-HLW-ME-HMP-MLTR-00002 - HIGH LEVEL WASTE MELTER 2.

PLEASE NOTE THAT SOURCE, SPECIAL NUCLEAR, AND BYPRODUCT MATERIALS, AS DEFINED IN THE ATOMIC ENERGY ACT OF 1954 (AEA), ARE REGULATED AT THE U.S. DEPARTMENT OF ENERGY (DOE) FACILITIES EXCLUSIVELY BY DOE ACTING PURSUANT TO ITS AEA AUTHORITY. DOE ASSERTS, THAT PURSUANT TO THE AEA, IT HAS SOLE AND EXCLUSIVE RESPONSIBILITY AND AUTHORITY TO REGULATE SOURCE, SPECIAL NUCLEAR, AND BYPRODUCT MATERIALS AT DOE-OWNED NUCLEAR FACILITIES. INFORMATION CONTAINED HEREIN ON RADIONUCLIDES IS PROVIDED FOR PROCESS DESCRIPTION PURPOSES ONLY.

REV	DESCRIPTION	ORG	CHKD	RVWD	APVD	DATE
1	ISSUED FOR PERMITTING USE. MAJOR REVISION, SEE NOTE 18.	RDP	NJ	EI JP	TV	4-28-06
0	ISSUED FOR PERMITTING USE.	RR	NJ	EI JP	TV	3-29-05

REVISION HISTORY

JAMES K. ROUSE STATE OF WASHINGTON 19518 REGISTERED PROFESSIONAL ENGINEER
EXPIRES: 3/5/08

ISSUED BY RPP-WTP PDC
ISSUE STAMP

PROJECT No.	24590	
SITE	HANFORD	
AREA	200E	
BUILDING No.	30	
	BY	DATE
ORIGINATOR	R RUSSELL	3-29-05
CHECKER	N JOHNSON	3-29-05
APPROVER	T VALENTINO	3-29-05
REVIEWER	J PULLEN	3-29-05

CONTENT APPLICABLE TO ALARA? [X] YES [ ] NO
ADR NO. N/A REV:
SAFETY SCREEN REQUIRED? [ ] YES [X] NO EMS INITIAL IF YES

BECHTEL
RIVER PROTECTION PROJECT
WASTE TREATMENT PLANT
2435 STEVENS CENTER PLACE
RICHLAND, WA 99354

CONTRACT No: DE-AC27-01RV14136

PROCESS FLOW DIAGRAM HLW VITRIFICATION MELTER 2 (SYSTEMS HMP AND HOP)

SCALE: NTS
24590-HLW-M5-V17T-P20002
REV 1

SAFETY SCREEN IS REQUIRED FOR DRAWING TYPES IDENTIFIED IN 24590-WTP-GPP-SREG-002

E SIZE - 44x34
COMPUTER GENERATED - MANUAL CHANGES NOT PERMITTED

R10873836

04/27/2006 03:29:18 PM

PLOTTED BY: rrussell
C:\Data\dms\60104\24590-HLW-M5-V17T-P20002.dgn

FORM E_SDN.DGN 02/2003

PLANT ITEM NUMBER DESCRIPTION	HOP-HTR-00006 MELTER 2 WESP BULGE INLET AIR HEATER	HOP-SCB-00002 MELTER 2 SUBMERGED BED SCRUBBER (SBS)	HOP-VSL-00904 MELTER 2 SBS CONDENSATE RECEIVER VESSEL	HOP-WESP-00002 MELTER 2 WET ELECTROSTATIC PRECIPITATOR (WESP)	HOP-HEME-00002A/B MELTER 2 HIGH EFFICIENCY MIST ELIMINATOR (HEME)	HOP-HTR-00005 A/B HEPA PRE-HEATER MELTER 2	HOP-HEPA-00007A/B PRIMARY OFFGAS HEPA FILTER, MELTER 2	HOP-HEPA-00008A/B PRIMARY OFFGAS HEPA FILTER MELTER 2 (SECONDARY)

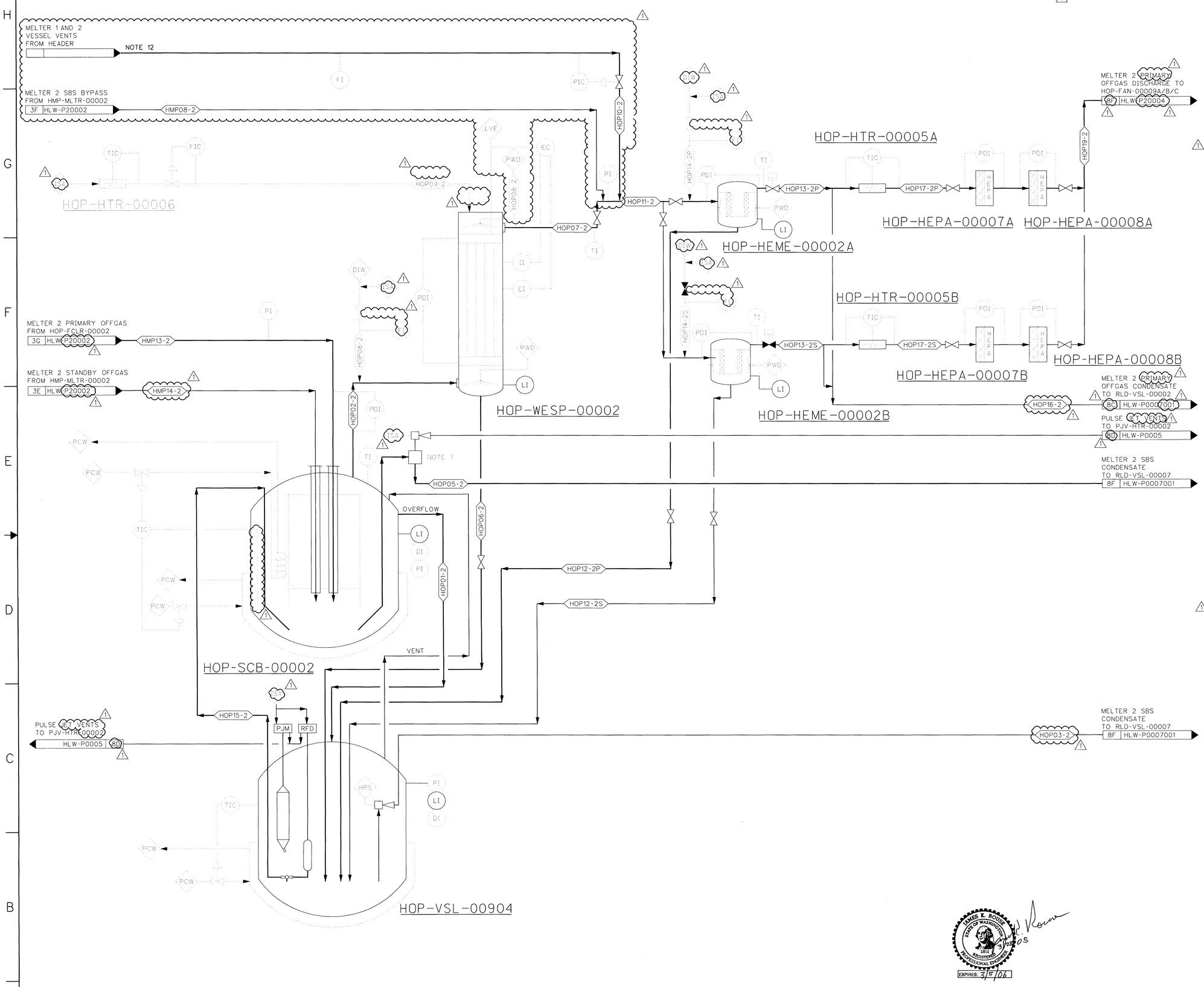

NOTES:

1. SEE DRAWING 24590-WTP-M5-V17T-P0001 FOR SYMBOLS AND LEGEND.
2. MAJOR INDICATION AND CONTROL INSTRUMENTATION ONLY SHOWN
3. VALVES SHOWN ONLY TO INDICATE PROCESS INTENT
4. DELETED
5. DELETED.
6. DELETED
7. ACCUMULATED CONDENSATE IN THE SBS SYSTEM SHALL BE ROUTINELY TRANSFERRED USING A AIR EJECTOR INDUCED SIPHON.
8. DELETED.
9. CONTENTS OF THIS DOCUMENT ARE DANGEROUS WASTE PERMIT AFFECTING.
10. DELETED.
11. DELETED.
12. ALL VENTED EQUIPMENT HAVE THE CAPABILITY TO VENT TO EITHER MELTER 1 OR MELTER 2 VESSEL VENT HEADER.
13. THE PORTIONS OF THIS DRAWING IN PHANTOM ARE CONSIDERED NON-PERMIT AFFECTING AND ARE NOT SUBJECT TO THE REGULATORY REQUIREMENTS OF THE WAC CODE FOR THE DANGEROUS WASTE PERMIT TO THE EXTENT THAT THOSE PORTIONS DO NOT IMPACT DANGEROUS WASTE AREAS/OPERATIONS.

REFERENCES:

1. 24590-HLW-3YD-HOP-00001, SYSTEMS DESCRIPTION FOR HLW MELTER OFFGAS TREATMENT PROCESS AND PROCESS VESSEL VENT EXTRACTION (HOP AND PVV SYSTEMS).
2. DELETED.
3. DELETED.
4. DELETED.
5. DELETED.
6. DELETED.
7. DELETED.
8. DELETED.
9. DELETED.
10. DELETED.
11. DELETED.
12. DELETED.
13. DELETED.
14. DELETED.
15. DELETED.
16. DELETED.

PLEASE NOTE THAT SOURCE, SPECIAL NUCLEAR AND BYPRODUCT MATERIALS, AS DEFINED IN THE ATOMIC ENERGY ACT OF 1954 (AEA), ARE REGULATED AT THE U.S. DEPARTMENT OF ENERGY (DOE) FACILITIES EXCLUSIVELY BY DOE ACTING PURSUANT TO ITS AEA AUTHORITY. DOE ASSERTS, THAT PURSUANT TO THE AEA, IT HAS SOLE AND EXCLUSIVE RESPONSIBILITY AND AUTHORIY TO REGULATE SOURCE, SPECIAL NUCLEAR, AND BYPRODUCT MATERIALS AT DOE-OWNED NUCLEAR FACILITIES. INFORMATION CONTAINED HEREIN ON RADIONUCLIDES IS PROVIDED FOR PROCESS DESCRIPTION PURPOSES ONLY.

JAMES E. ROUSE STATE OF WASHINGTON 18958 REGISTERED PROFESSIONAL ENGINEER
EXPIRES: 3/5/06

REV	DESCRIPTION	ORG	CHKD	RVWD	APVD	DATE
1	ISSUED FOR PERMITTING USE					3-24-05
0	ISSUED FOR PERMITTING USE	RR	NJ	JP	DWP	9-25-03

REVISION HISTORY

ISSUED BY RPP-WTP PDC

ISSUE STAMP

PROJECT No.	24590	
SITE	HANFORD	
AREA	200E	
BUILDING No.		
	BY	DATE
ORIGINATOR	RONDA RUSSELL	9-25-03
CHECKER	NGA JOHNSON	9-25-03
APPROVER	DILIP PATEL	9-25-03
REVIEWER	JEFF PULLEN	9-25-03

CONTENT APPLICABLE TO ALARA? [X] YES [ ] NO
ADR NO. N/A REV:

BECHTEL

RIVER PROTECTION PROJECT
WASTE TREATMENT PLANT
2435 STEVENS CENTER PLACE
RICHLAND, WA 99352

CONTRACT No: DE-AC27-01RV14136

PROCESS FLOW DIAGRAM HLW VIT MELTER 2 PRIMARY OFFGAS TREATMENT (SYSTEM HOP)

SCALE: NTS

24590-HLW-M5-V17T-P20003

REV 1

"E" SIZE - 44x34
COMPUTER GENERATED - MANUAL CHANGES NOT PERMITTED

R10502802

03/23/2005 09:55:45 AM

PLOTTED BY rrrussel
C:\Work Dms\60004\24590-HLW-M5-V17T-P20003.dgn

FORM E_SDN.DGN 02/2003

24590-HLW-M5-V17T-P20004

PLANT ITEM NUMBER / DESCRIPTION	HOP-FAN-00009A/B/C BOOSTER EXTRACTION FAN	HOP-ABS-00003 SILVER MORDENITE COLUMN	HOP-ADBR-00002A/B ACTIVATED CARBON ADSORBER	HOP-HX-00003 CATALYST SKID PREHEATER	HOP-HX-00004 SILVER MORDENITE PREHEATER	HOP-HTR-00007 CATALYST SKID ELECTRIC HEATER	HOP-FAN-00010A/B/C STACK EXTRACTION FAN	HOP-SCO-00004 THERMAL CATALYTIC OXIDIZER	HOP-SCO-00003 CATALYST SKID	HOP-SCR-00002 NOX SELECTIVE CATALYTIC REDUCER

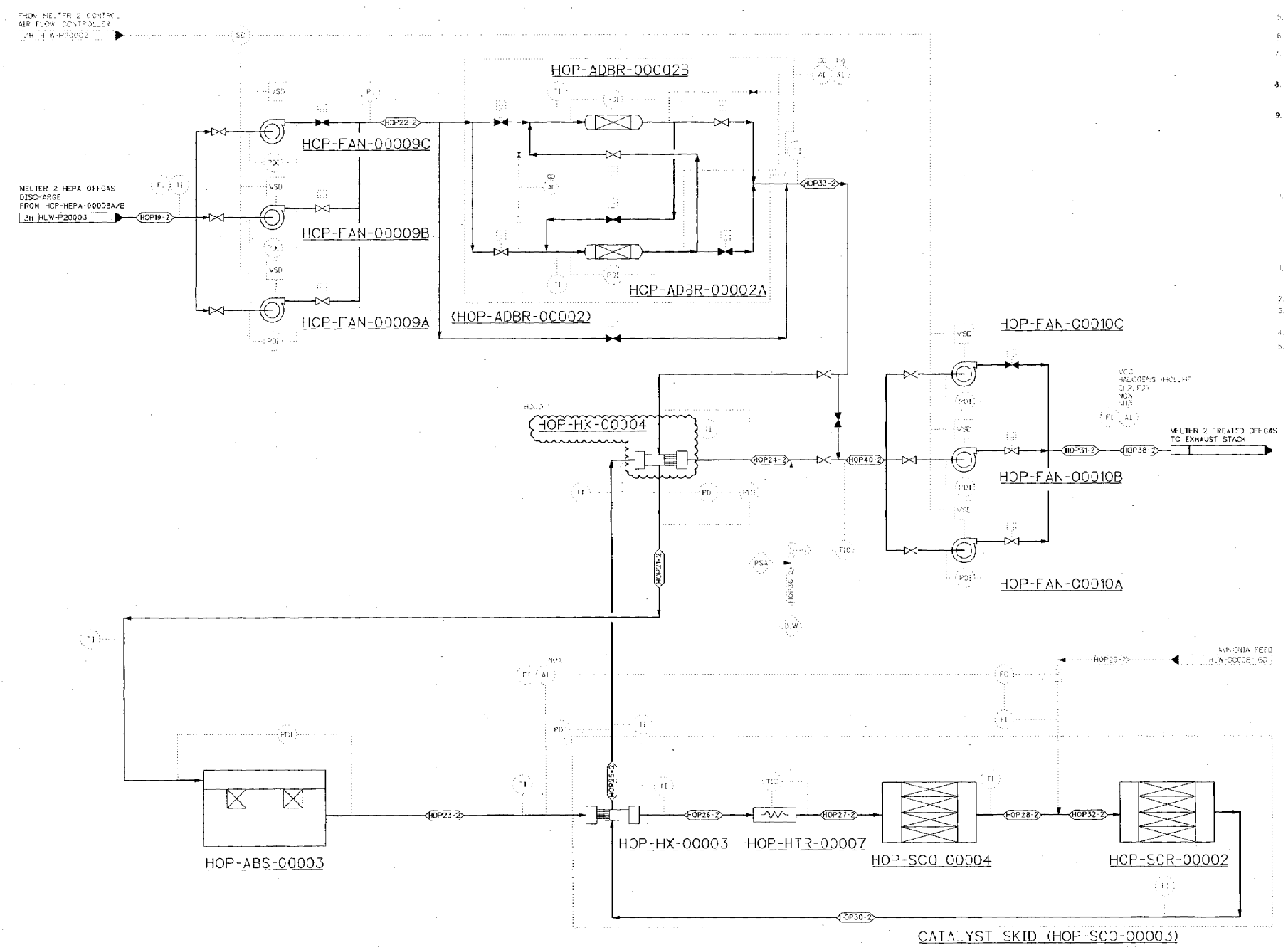

NOTES:

1. SEE DRAWING 24590-PTF-M5-V17T-P00001 FOR SYMBOLS AND LEGEND.
2. MAJOR INDICATION AND CONTROL INSTRUMENTATION ONLY SHOWN
3. VALVES SHOWN ONLY TO INDICATE PROCESS INTENT
4. DELETED
5. DELETED
6. DELETED.
7. DELETED.
8. CONTENTS OF THIS DOCUMENT ARE DANGEROUS WASTE PERMIT AFFECTING.
9. THE PORTIONS OF THIS DRAWING SHOWN IN PHANTOM ARE CONSIDERED NON-PERMIT AFFECTING AND ARE NOT SUBJECT TO THE REGULATORY REQUIREMENTS OF THE WAC CODE FOR THE DANGEROUS WASTE PERMIT TO THE EXTENT THAT THESE PORTIONS DO NOT IMPACT DANGEROUS WASTE AREAS/OPERATIONS.

HOLDS:

1. EQUIPMENT ARRANGEMENT PENDING DOE APPROVAL.

REFERENCE:

1. 24590-HLW-SYD-HOP-00001, REV. 0: SYSTEMS DESCRIPTION FOR HLW MELTER OFFGAS TREATMENT PROCESS AND PROCESS VESSEL VENT EXTRACTION (HOP AND PVV SYSTEMS)
2. DELETED
3. DELETED
4. DELETED
5. DELETED

PLEASE NOTE THAT SOURCE, SPECIAL, NUCLEAR, AND BYPRODUCT MATERIALS AS DEFINED IN THE ATOMIC ENERGY ACT OF 1954 (AEA), ARE REGULATED AT THE U.S. DEPARTMENT OF ENERGY (DOE) FACILITIES EXCLUSIVELY BY DOE ACTING PURSUANT TO ITS AEA AUTHORITY. DOE ASSERTS, THAT PURSUANT TO THE AEA, IT HAS SOLE AND EXCLUSIVE RESPONSIBILITY AND AUTHORITY TO REGULATE SOURCE, SPECIAL, NUCLEAR, AND BYPRODUCT MATERIALS AT DOE-OWNED NUCLEAR FACILITIES. INFORMATION CONTAINED HEREIN ON RADIONUCLIDES IS PROVIDED FOR PROCESS DESCRIPTION PURPOSES ONLY.

REV	DESCRIPTION	ORG	CHKD	RVWD	APVD	DATE
0	ISSUED FOR PERMITTING USE					1/22/04

REVISION HISTORY

ISSUED BY: BECHTEL NATIONAL, INC. ICN STATE

ISSUE STAMP

	BY	DATE
PROJECT No.	24590	
SITE	HANFORD	
AREA	200E	
BUILDING No.		
ORIGINATOR		1/22/04
CHECKER		1/22/04
APPROVER		1/22/04
REVIEWER		1/22/04

CONTENT APPLICABLE TO NLAA? YES NO

ADR NO. REV.

RIVER PROTECTION PROJECT
WASTE TREATMENT PLANT
2435 STEVENS CENTER PLACE
RICHLAND WA 99352

CONTRACT No. DE-AC27-01RV14136

PROCESS FLOW DIAGRAM
HLW VITRIFICATION
MELTER 2
SECONDARY OFFGAS TREATMENT (SYSTEM HOP)

SCALE: NTS

24590-HLW-M5-V17T-P20004

REV 0

E SIZE - 44x34
COMPUTER GENERATED - MANUAL CHANGES NOT PERMITTED

FORM E_SDN.004 02/2002

01/22/2004 03:38:05 PM

PLOTTED BY: mrwood
G:\WORK\PROJDOCS\24590\HLW\M5-V17T-P20004.dgn

Attachment 51 – Appendix 10.2
High Level Waste Building
Piping and Instrumentation Diagrams

Where information regarding treatment, management, and disposal of the radioactive source, byproduct material, and/or special nuclear components of mixed waste (as defined by the Atomic Energy Act of 1954, as amended) has been incorporated into this permit, it is not incorporated for the purpose of regulating the radiation hazards of such components under the authority of this permit and chapter 70.105 RCW. In the event of any conflict between Permit Condition III.10.A. and any statement relating to the regulation of source, special nuclear, and byproduct material contained in portions of the permit application that are incorporated into this permit, Permit Condition III.10.A. will prevail.

Additional appendices will be added to this appendix as new information is incorporated into this permit.

Drawings and Documents

Attachment 51 – Appendix 10.2

High Level Waste Building
Piping and Instrumentation Diagrams

The following drawings have been incorporated into Appendix 10.2 and can be viewed at the Ecology Richland Office. **New drawings are in bold lettering**.

Drawing/Document	**Description**
24590-HLW–M6-HCP-P0001, Rev 1	Piping & Instrumentation Diagram HLW Concentrate Receipt Process System Melter 1 Transfer Piping
24590-HLW–M6-HCP-P0002, Rev 1	Piping & Instrumentation Diagram HLW Concentrate Receipt Process System Melter 2 Transfer Piping
24590-HLW-M6-HDH-P0001, Rev 1	Piping & Instrumentation Diagram HLW Canister Decontamination Handling System
24590-HLW-M6-HDH-P0002, Rev 1	Piping & Instrumentation Diagram HLW Canister Decontamination Handling System
24590-HLW-M6-HDH-P20001, Rev 1	Piping & Instrumentation Diagram HLW Canister Decontamination Handling System
24590-HLW-M6-HFP-P0001, Rev 1	Piping & Instrumentation Diagram HLW Melter Feed Process System Melter Feed Preparation Vessel HFP-VSL-00001
24590-HLW-M6-HFP-P0002, Rev 1	Piping & Instrumentation Diagram HLW Melter Feed Process System Melter Feed Vessel HFP-VSL-00002
24590-HLW-M6-HFP-P0007, Rev. 0	Piping & Instrumentation Diagram HLW Melter Feed Process System HFP-VSL-00001 Agitation and Sparging
24590-HLW-M6-HFP-P0008, Rev. 0	Piping & Instrumentation Diagram HLW Melter Feed Process System HFP-VSL-00002 Agitation and Sparging
24590-HLW-M6-HFP-P20001, Rev 1	Piping & Instrumentation Diagram HLW Melter Feed Process System Melter Feed Preparation Vessel HFP-VSL-00005 (Melter 2)
24590-HLW-M6-HFP-P20002, Rev 1	Piping & Instrumentation Diagram HLW Melter Feed Process System Melter Feed Vessel HFP-VSL-00006 (Melter 2)
24590-HLW-M6-HFP-P20007, Rev. 0	Piping & Instrumentation Diagram HLW Melter Feed Process System HFP-VSL-00005 Agitation and Sparging
24590-HLW-M6-HFP-P20008, Rev. 0	Piping & Instrumentation Diagram HLW Melter Feed Process System HFP-VSL-00006 Agitation and Sparging
24590-HLW-M6-HMP-P0001, Rev 1 *Official Use Only*	Piping & Instrumentation Diagram HLW Melter 1 System Feed and Agitation Official Use Only
24590-HLW-M6-HMP-P0002, Rev 1	Piping & Instrumentation Diagram HLW Melter 1 System Film Cooler and Off Gas Connection
24590-HLW-M6-HMP-P0003, Rev 0	Piping & Instrumentation Diagram HLW Melter Process System HLW Melter 1 Cooling System
24590-HLW-M6-HMP-P0004, Rev 0	Piping & Instrumentation Diagram HLW Melter 1 Electrode Air Cooling and Joule Heating
24590-HLW-M6-HMP-P0006, Rev 1	Piping & Instrumentation Diagram HLW Melter 1 System East Discharge Heaters and Airlift
24590-HLW-M6-HMP-P0007, Rev 1	Piping & Instrumentation Diagram HLW Melter 1 System West Discharge Heater and Airlift
24590-HLW-M6-HMP-P0008, Rev 1	Piping & Instrumentation Diagram HLW Melter 1 Glass Pour

Drawing/Document	Description
	and Monitoring Instrumentation
24590-HLW-M6-HMP-P0013, Rev 1	Piping & Instrumentation Diagram HLW Melter 1 System Pressure, Density, and Level Detection
24590-HLW-M6-HMP-P0014, Rev 0	Piping & Instrumentation Diagram HLW Melter Process System HLW Melter 1 Cooling System
24590-HLW-M6-HMP-P20001, Rev 1	Piping & Instrumentation Diagram HLW Melter 2 System Feed and Agitation Official Use Only
24590-HLW-M6-HMP-P20002, Rev 1	Piping & Instrumentation Diagram HLW Melter 2 System Film Cooler and Off Gas Connection
24590-HLW-M6-HMP-P20003, Rev 0	Piping & Instrumentation Diagram HLW Melter 2 Cooling System
24590-HLW-M6-HMP-P20004, Rev 0	Piping & Instrumentation Diagram HLW Melter 2 Electrode Air Cooling and Joule Heating
24590-HLW-M6-HMP-P20006, Rev 1	Piping & Instrumentation Diagram HLW Melter 2 System East Discharge Heaters and Airlift
24590-HLW-M6-HMP-P20007, Rev 1	Piping & Instrumentation Diagram HLW Melter 2 West Discharge Heater and Airlift
24590-HLW-M6-HMP-P20008, Rev 1	Piping & Instrumentation Diagram HLW Melter Process System Melter 2 Glass Pour and Monitoring Instrumentation
24590-HLW-M6-HMP-P20013, Rev 1	Piping & Instrumentation Diagram HLW Melter 2 System Pressure, Density, and Level Detection
24590-HLW-M6-HMP-P20014, Rev 0	Piping & Instrumentation Diagram HLW Melter Process System HLW Melter 2 Cooling System
24590-HLW-M6-HOP-P0001, Rev. 1	Piping & Instrumentation Diagram HLW Melter Offgas System Melter 1 Primary Offgas Scrubber
24590-HLW-M6-HOP-P0002, Rev 1	Piping & Instrumentation Diagram Melter 2 Primary Offgas WESP
24590-HLW–M6-HOP-P0003, Rev 0	Piping and Instrumentation Diagram HLW Melter Offgas System Melter 1 Secondary Offgas Treatment Sheet 1 of 2
24590-HLW–M6-HOP-P0004, Rev 2	Piping and Instrumentation Diagram HLW Melter 1 Offgas Fluidic Air Rack (HOP-RK-00025)
24590-HLW–M6-HOP-P0006, Rev 2	Piping and Instrumentation Diagram HLW Melter Offgas System Melter 1 Primary Offgas Scrubber Condensate Vessel
24590-HLW–M6-HOP-P0008, Rev 0	Piping and Instrumentation Diagram HLW Melter Offgas System Melter 1 Secondary Offgas Treatment Sheet 2 of 2
24590-HLW-M6-HOP-P0009, Rev 1	Piping & Instrumentation Diagram HLW Melter Offgas System Melter 1 Primary Offgas HEME
24590-HLW-M6-HOP-P0010, Rev 0	Piping & Instrumentation Diagram HLW Melter Offgas System Melter 1 Primary Offgas HEPA Filters
24590-HLW-M6-HOP-P20001, Rev 1	Piping & Instrumentation Diagram HLW Melter Offgas System Melter 2 Primary Offgas Scrubber
24590-HLW-M6-HOP-P20002, Rev 1	Piping & Instrumentation Diagram HLW Melter Offgas System Melter 2 Primary Offgas WESP
24590-HLW–M6-HOP-P20003, Rev 0	Piping & Instrumentation Diagram HLW Melter Offgas System Melter 2 Secondary Offgas Treatment Sheet 1 of 2
24590-HLW–M6-HOP-P20004, Rev 1	Piping &Instrumentation Diagram HLW Melter 2 Offgas Fluidic Air Rack (HOP-RK-00048)
24590-HLW–M6-HOP-P20006, Rev 1	Piping & Instrumentation Diagram HLW Melter Offgas System Melter 2 Primary Offgas Scrubber Condensate Vessel

Drawing/Document	Description
24590-HLW–M6-HOP-P20008, Rev 0	Piping & Instrumentation Diagram HLW Melter Offgas System Melter 2 Secondary Offgas Treatment Sheet 2 of 2
24590-HLW-M6-HOP-P20009, Rev 1	Piping & Instrumentation Diagram HLW Melter Offgas System Melter 2 Primary Offgas HEME
24590-HLW-M6-HOP-P20010, Rev 0	Piping & Instrumentation Diagram HLW Melter Offgas System Melter 2 Primary Offgas HEPA Filters
24590-HLW-M6-PJV-P0001, Rev 0	Piping & Instrumentation Diagram HLW Pulse Jet Ventilation System Collection and Conditioning
24590-HLW-M6-PJV-P0002, Rev 0	Piping & Instrumentation Diagram HLW Pulse Jet Ventilation System Filtration and Monitoring
24590-HLW-M6-PVV-P0001, Rev 0	Piping & Instrumentation Diagram HLW Process Vessel Vent Exhaust System
24590-HLW-M6-PVV-P20001, Rev 0	Piping & Instrumentation Diagrams HLW Melter 2 Process Vessel Vent Exhaust System
24590-HLW–M6-RLD-P0001, Rev 1	Piping & Instrumentation Diagram HLW Radioactive Liquid Waste Disposal System Active Effluent Collection
24590-HLW–M6-RLD-P0002, Rev 1	Piping & Instrumentation Diagram HLW Radioactive Liquid Waste Disposal System Plant Wash & Drains Vessel
24590-HLW-M6-RLD-P0003, Rev 0	Piping & Instrumentation Diagrams HLW Radioactive Liquid Waste Disposal System Decontamination Tank & Sumps
24590-HLW-M6-RLD-P0004, Rev 0	Piping & Instrumentation Diagrams HLW Radioactive Liquid Waste Disposal System Fluidics Air Rack RLD-RK-00023
24590-HLW-M6-RLD-P0006, Rev 0	Piping & Instrumentation Diagrams HLW Radioactive Liquid Waste Disposal System Fluidics Air Rack RLD-RK-00024
24590-HLW-M6-RLD-P0007, Rev 0	Piping & Instrumentation Diagrams HLW Radioactive Liquid Waste Disposal System
24590-HLW-M6-RLD-P0008, Rev 0	Piping & Instrumentation Diagrams HLW Radioactive Liquid Waste Disposal System Miscellaneous Sumps
24590-HLW-M6-RLD-P0014, Rev 0	Piping & Instrumentation Diagrams HLW Radioactive Liquid Waste Disposal System Offgas Drains Collection Vessel
24590-HLW-M6-RLD-P0015, Rev 0	Piping & Instrumentation Diagrams HLW Radioactive Liquid Waste Disposal System Miscellaneous Sumps
24590-HLW-M6-RLD-P0016, Rev 0	Piping & Instrumentation Diagrams HLW Radioactive Liquid Waste Disposal System Miscellaneous Sumps
24590-HLW-M6-RLD-P0017, Rev 0	Piping & Instrumentation Diagrams HLW Radioactive Liquid Waste Disposal System Miscellaneous Sumps
24590-HLW-M6-RLD-P20003, Rev 1	Piping & Instrumentation Diagrams HLW Radioactive Liquid Waste Disposal System Decontamination Tank & Sumps - Melter 2
24590-HLW-M6-RLD-P20004, Rev 0	Piping & Instrumentation Diagrams HLW Radioactive Liquid Waste Disposal System Miscellaneous Sumps - Melter 2
24590-HLW-M6-RLD-P20005, Rev 0	Piping & Instrumentation Diagrams HLW Radioactive Liquid Waste Disposal System Miscellaneous Sumps - Melter 2
24590-HLW-PCN-ENV-05-005	Changes to the RLD P&ID – construction interferences while maintain minimum slope requirements. HLW-M6-RLD-P0015 – Rev 0, P0017 – Rev 0, P20004 – Rev 0, and P20005 – Rev 0
RESERVED	RESERVED

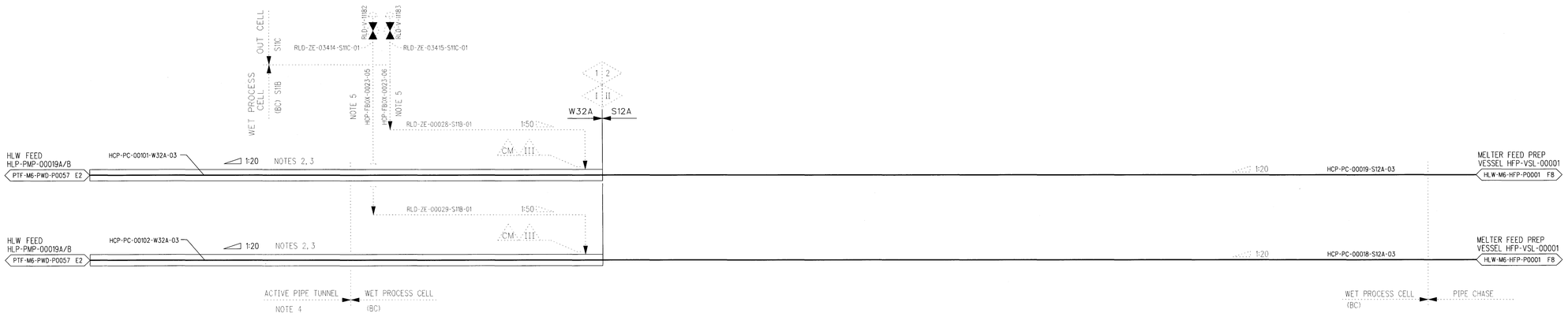

NOTES:

THE FOLLOWING NOTES ARE GENERAL NOTES FOR HCP SYSTEM

1. SEE DRAWINGS 24590-WTP-M6-50-P0001 THROUGH 24590-WTP-M6-50-P0006 FOR GENERAL NOTES, SYMBOLS AND LEGEND.

THE FOLLOWING NOTES ARE SPECIFIC TO THIS DRAWING

2. BATTERY LIMITS FOR PIPING IS INSIDE OF HLW FACILITY. BOF IS RESPONSIBLE FOR PIPING BETWEEN PRE-TREATMENT AND HLW. SEE ADJOINING PTF DRAWING.
3. PIPING OUTSIDE OF BUILDING IS DIRECT-BURIED COAXIAL PIPE. PRE-TREATMENT IS RESPONSIBLE FOR COAXIAL PIPE LEAK DETECTION. SEE ADJOINING PTF DRAWINGS.
4. A FLANGED SPOOL PIECE IS REQUIRED FOR THE INNER PIPE IN THE ACTIVE PIPE TUNNEL. SPOOL PIECE SHALL BE REMOVED AND PIPING IS TO BE RESTORED TO DOUBLE CONTAINED PIPING AFTER THE STARTUP PHASE IS COMPLETE.
5. JOGGLED PENETRATIONS ARE QL-1 SC-I.
6. CONTENTS OF THIS DOCUMENT ARE DANGEROUS WASTE PERMIT AFFECTING.
7. MODIFIED/RENUMBERED NOTES, ADDED NOTE 5, CHANGED SEISMIC CATEGORY AND QUALITY LEVEL DESIGNATION OF FLUSH LINE, UPDATED REFERENCE, REMOVED HOLD, DELETED CONCENTRATE RECEIPT VESSEL, AND UPDATED CONNECTING FLAGS.
8. THE PORTIONS OF THIS DRAWING SHOWN IN PHANTOM ARE CONSIDERED NON-PERMIT AFFECTING AND ARE NOT SUBJECT TO THE REGULATORY REQUIREMENTS OF THE WAC CODE FOR THE DANGEROUS WASTE PERMIT TO THE EXTENT THAT THOSE PORTIONS DO NOT IMPACT DANGEROUS WASTE AREAS/OPERATIONS.

REFERENCES

1. 24590-HLW-M5-V17T-P0001, "PROCESS FLOW DIAGRAM HLW RECEIPT AND FEED PREPARATION (SYSTEM HCP, GFR & HFP)".
2. 24590-HLW-3YD-HFP-00001, "SYSTEM DESCRIPTION FOR HLW CONCENTRATE RECEIPT AND MELTER FEED PROCESS SYSTEM (HCP AND HFP)".

PLEASE NOTE THAT SOURCE, SPECIAL NUCLEAR AND BYPRODUCT MATERIALS, AS DEFINED IN THE ATOMIC ENERGY ACT OF 1954 (AEA), ARE REGULATED AT THE U.S. DEPARTMENT OF ENERGY (DOE) FACILITIES EXCLUSIVELY BY DOE ACTING PURSUANT TO ITS AEA AUTHORITY. DOE ASSERTS, THAT PURSUANT TO THE AEA, IT HAS SOLE AND EXCLUSIVE RESPONSIBILITY AND AUTHORITY TO REGULATE SOURCE, SPECIAL NUCLEAR, AND BYPRODUCT MATERIAL AT DOE-OWNED NUCLEAR FACILITIES. INFORMATION CONTAINED HEREIN ON RADIONUCLIDES IS PROVIDED FOR PROCESS DESCRIPTION PURPOSES ONLY.

REV	DESCRIPTION	ORG	CHKD	RVWD	APVD	DATE
1	MAJOR REVISION, SEE NOTE 7 ISSUED FOR PERMITTING USE	SJC	BR	FL	RV	5-17-05
0	ISSUED FOR PERMITTING USE	SJC	LQF	DMY	DNP	3/16/03

REVISION HISTORY

Q
QUALITY DESIGNATOR

ISSUED BY RPP-WTP PDC
ISSUE STAMP

PROJECT No.	24590
SITE	HANFORD
AREA	200E
BUILDING No.	30

	BY	DATE
ORIGINATOR	STEVEN J. CROSS	3/13/03
CHECKER	L. FONG	3/13/03
APPROVER	D. PATEL	3/16/03
REVIEWER	D. YARBROUGH	3/13/03

ERIC B. ISEBRN
STATE OF WASHINGTON
33449
REGISTERED
PROFESSIONAL ENGINEER
EXPIRES: 07/28/05

CONTENT APPLICABLE TO ALARA? [X] YES [ ] NO
ADR NO. N/A REV:
SAFETY SCREEN REQUIRED? [ ] YES [X] NO EMS INITIAL IF YES

BECHTEL

RIVER PROTECTION PROJECT
WASTE TREATMENT PLANT
2435 STEVENS CENTER PLACE
RICHLAND, WA 99354

CONTRACT No: DE-AC27-01RV14136

P&ID - HLW CONCENTRATE RECEIPT PROCESS SYSTEM MELTER 1 TRANSFER PIPING

SCALE: NONE

24590-HLW-M6-HCP-P0001

REV 1

SAFETY SCREEN IS REQUIRED FOR DRAWING TYPES IDENTIFIED IN 24590-WTP-GPP-SREG-002

"E" SIZE - 44x34
COMPUTER GENERATED - MANUAL CHANGES NOT PERMITTED

R10071781

05/13/2005 08:47:17 AM

FORM E_SDN.DGN 02/2003

ECD By: wmhunter
FILENAME: 24590-HLW-M6-HCP-P0001-2.dgn
DATE: 05/13/2005

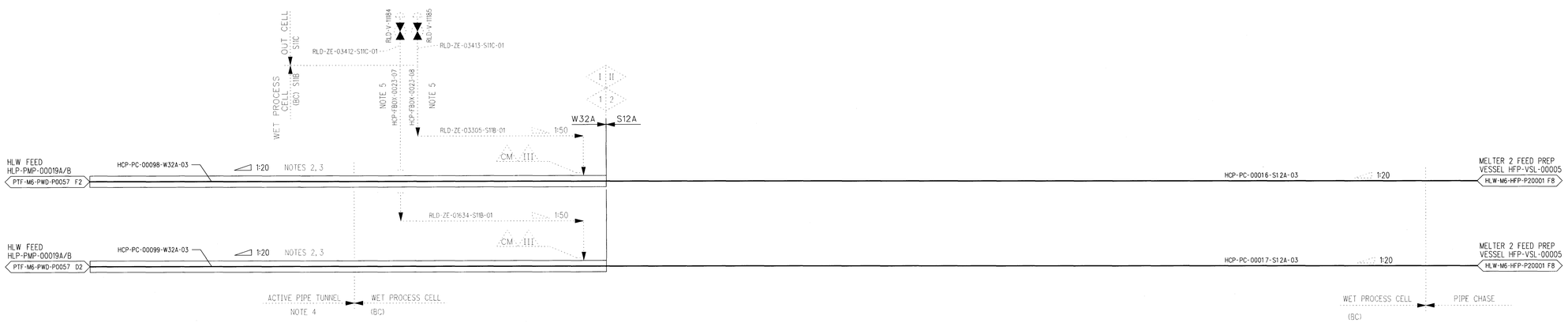

NOTES:

THE FOLLOWING NOTES ARE GENERAL NOTES FOR HCP SYSTEM

1. SEE DRAWINGS 24590-WTP-M6-50-P0001 THROUGH 24590-WTP-M6-50-P0006 FOR GENERAL NOTES, SYMBOLS AND LEGEND.

THE FOLLOWING NOTES ARE SPECIFIC TO THIS DRAWING

2. BATTERY LIMITS FOR PIPING IS INSIDE OF HLW FACILITY. BOF IS RESPONSIBLE FOR PIPING BETWEEN PRE-TREATMENT AND HLW. SEE ADJOINING PTF DRAWING.
3. PIPING OUTSIDE OF BUILDING IS DIRECT-BURIED COAXIAL PIPE. PRE-TREATMENT IS RESPONSIBLE FOR COAXIAL PIPE LEAK DETECTION. SEE ADJOINING PTF DRAWINGS.
4. A FLANGED SPOOL PIECE IS REQUIRED FOR THE INNER PIPE IN THE ACTIVE PIPE TUNNEL. SPOOL PIECE SHALL BE REMOVED AND PIPING IS TO BE RESTORED TO DOUBLE CONTAINED PIPING AFTER THE STARTUP PHASE IS COMPLETE.
5. JOGGLED PENETRATIONS ARE QL-1, SC-I.
6. CONTENTS OF THIS DOCUMENT ARE DANGEROUS WASTE PERMIT AFFECTING.
7. MODIFIED/RENUMBERED NOTES, ADDED NOTE 5, CHANGED SEISMIC CATEGORY AND QUALITY LEVEL DESIGNATION OF FLUSH LINE, UPDATED REFERENCE, REMOVED HOLD, DELETED CONCENTRATE RECEIPT VESSEL, AND CONNECTING FLAGS.
8. THE PORTIONS OF THIS DRAWING SHOWN IN PHANTOM ARE CONSIDERED NON-PERMIT AFFECTING AND ARE NOT SUBJECT TO THE REGULATORY REQUIREMENTS OF THE WAC CODE FOR THE DANGEROUS WASTE PERMIT TO THE EXTENT THAT THOSE PORTIONS DO NOT IMPACT DANGEROUS WASTE AREAS/OPERATIONS.

REFERENCES

1. 24590-HLW-M5-V17T-P0001, "PROCESS FLOW DIAGRAM HLW RECEIPT AND FEED PREPARATION (SYSTEM HCP, GFR & HFP)".
2. 24590-HLW-3YD-HFP-00001, "SYSTEM DESCRIPTION FOR HLW CONCENTRATE RECEIPT AND MELTER FEED PROCESS SYSTEMS (HCP AND HFP)".

PLEASE NOTE THAT SOURCE, SPECIAL NUCLEAR AND BYPRODUCT MATERIALS, AS DEFINED IN THE ATOMIC ENERGY ACT OF 1954 (AEA), ARE REGULATED AT THE U.S. DEPARTMENT OF ENERGY (DOE) FACILITIES EXCLUSIVELY BY DOE ACTING PURSUANT TO ITS AEA AUTHORITY. DOE ASSERTS, THAT PURSUANT TO THE AEA, IT HAS SOLE AND EXCLUSIVE RESPONSIBILITY AND AUTHORITY TO REGULATE SOURCE, SPECIAL NUCLEAR, AND BYPRODUCT MATERIAL AT DOE-OWNED NUCLEAR FACILITIES. INFORMATION CONTAINED HEREIN ON RADIONUCLIDES IS PROVIDED FOR PROCESS DESCRIPTION PURPOSES ONLY.

Q
QUALITY DESIGNATOR

REVISION HISTORY

REV	DESCRIPTION	ORG	CHKD	RVWD	APVD	DATE
1	MAJOR REVISION, SEE NOTE 7 ISSUED FOR PERMITTING USE	SL	QF	GL	TV	5-17-05
0	ISSUED FOR PERMITTING USE	SJC	LQF	DMY	DNP	3/16/03

ISSUED BY RPP-WTP PDC
ISSUE STAMP

PROJECT No.	24590
SITE	HANFORD
AREA	200E
BUILDING No.	30

	BY	DATE
ORIGINATOR	STEVEN J. CROSS	3/13/03
CHECKER	L. FONG	3/13/03
APPROVER	D. PATEL	3/16/03
REVIEWER	D. YARBROUGH	3/13/03

CONTENT APPLICABLE TO ALARA? [X] YES [ ] NO
ADR NO. N/A REV:
SAFETY SCREEN REQUIRED? [ ] YES [X] NO EMAS INITIAL IF YES

ERIC B. ISBELL, STATE OF WASHINGTON, 33449, REGISTERED PROFESSIONAL ENGINEER, 5/19/05
EXPIRES: 07/28/05

RIVER PROTECTION PROJECT
WASTE TREATMENT PLANT
2435 STEVENS CENTER PLACE
RICHLAND, WA 99354

CONTRACT No: DE-AC27-01RV14136

P&ID - HLW CONCENTRATE RECEIPT PROCESS SYSTEM MELTER 2 TRANSFER PIPING

SCALE: NONE
24590-HLW-M6-HCP-P0002
REV. 1

"E" SIZE - 44x34
COMPUTER GENERATED - MANUAL CHANGES NOT PERMITTED

SAFETY SCREEN IS REQUIRED FOR DRAWING TYPES IDENTIFIED IN 24590-WTP-GPP-SREG-002

R10571782

05/13/2005 08:49:07 AM

PLOTTED BY: smchorney
C:\Work\dms05070\HLW\M6\HCP00022.dgn

FORM E_SDN.DGN 02/2003

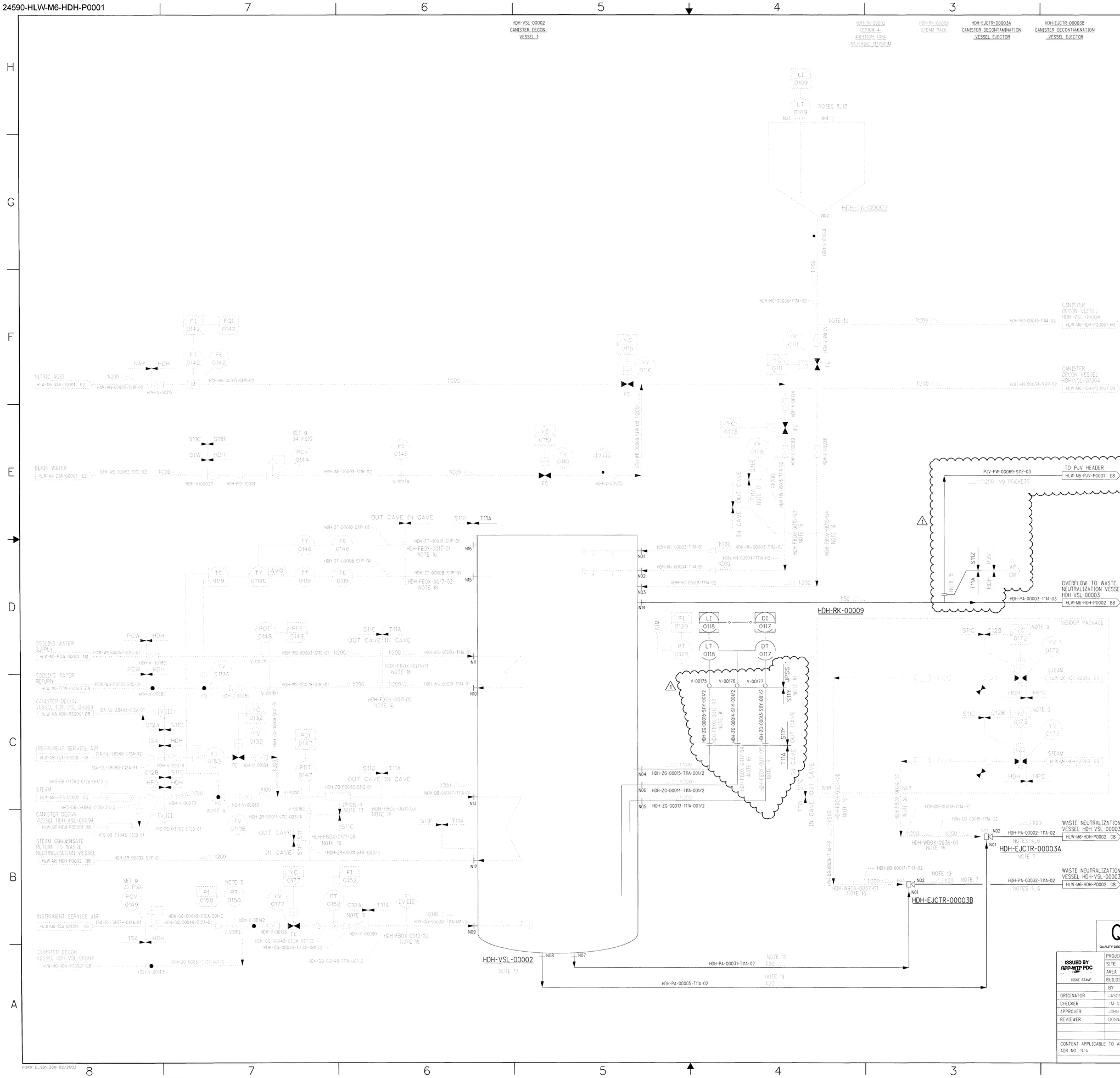

NOTES:

THE FOLLOWING NOTES ARE GENERAL NOTES FOR HDH SYSTEM.

1. SEE DRAWINGS 24590-WTP-M6-50-P0001 THROUGH 24590-WTP-M6-50-P0006 FOR GENERAL NOTES, SYMBOLS AND LEGEND.
2. DELETED.

THE FOLLOWING NOTES ARE SPECIFIC TO THIS DRAWING.

3. LOCATE PRESSURE TRANSMITTER (PT-0150) CLOSE TO PRESSURE REGULATING VALVE (PCV-0149).
4. THE HIGHEST SECTION OF THE EJECTOR DISCHARGE LINES TO BE ABOVE OVERFLOW NOZZLE ELEVATION OF HDH-VSL-00002.
5. CONTENTS OF THIS DOCUMENT ARE DANGEROUS WASTE PERMIT AFFECTING.
6. EJECTOR DISCHARGE PIPING TO HAVE A MINIMUM LENGTH OF STRAIGHT PIPE EQUIVALENT TO 10 TIMES OF PIPE OUTSIDE DIAMETER BEFORE THE FIRST BEND.
7. EJECTOR TO BE LOCATED AT THE LOWEST SECTION OF SUCTION PIPING.
8. CERIUM 4+ ADDITION TANK WILL BE LOADED MANUALLY AS NEEDED.
9. THE VALVE SHALL BE A SLOW OPENING VALVE TO PREVENT STEAM CONDENSATE HAMMER.
10. DELETED.
11. A FLANGE KIT IS REQUIRED BETWEEN CARBON STEEL AND TITANIUM FLANGES TO PREVENT GALVANIC CORROSION.
12. YC-0111 AND YC-0212 (LOCATED ON P&ID 24590-HLW-M6-HDH-P20001) NEED TO BE AS CLOSE TOGETHER AS POSSIBLE.
13. VESSEL/TANK IS COMMERCIAL QUALITY AND SEISMIC CATEGORY III.
14. ALL PIPING IS COMMERCIAL QUALITY AND SEISMIC CATEGORY III UNLESS OTHERWISE NOTED.
15. BOTH SYSTEM AND MATERIAL SPECIFICATION BREAKS ARE TO BE LOCATED AT THE FLANGE INTERFACE ON THE IN-LINE TEE.
16. WALL/FLOOR JOGGLED PENETRATIONS SHALL BE DESIGNATED QL-1/SC-1.
17. A HELICOFLEX GASKET IS TO BE UTILIZED AT THE FLANGE INTERFACE BETWEEN STAINLESS STEEL AND TITANIUM.
18. DELETED.
19. SLOPE THE LINE AT A MINIMUM 1:20 UNLESS CONSTRAINED BY PHYSICAL LIMITATIONS. IF CONSTRAINED BY PHYSICAL LIMITATIONS, SLOPE MAY BE REDUCED TO 1:50.
20. THE PORTIONS OF THIS DRAWING SHOWN IN PHANTOM ARE CONSIDERED NON-PERMIT AFFECTING AND ARE NOT SUBJECT TO THE REGULATORY REQUIREMENTS OF THE WAC CODE FOR THE DANGEROUS WASTE PERMIT TO THE EXTENT THAT THOSE PORTIONS DO NOT IMPACT DANGEROUS WASTE AREAS/OPERATIONS.

HOLD/OPEN ITEMS:

1. DELETED.
2. DELETED.
3. DELETED.

REFERENCES:

1. PROCESS FLOW DIAGRAM HLW VITRIFICATION HLW CANISTER DECON (SYSTEM HDH), 24590-HLW-M5-V17T-P0006.
2. DELETED.
3. DELETED.
4. DELETED.

ERIC B. ISBERG — STATE OF WASHINGTON — 33449 — REGISTERED PROFESSIONAL ENGINEER — 3/30/05 — EXPIRES: 07/28/05

PLEASE NOTE THAT SOURCE, SPECIAL NUCLEAR AND BYPRODUCT MATERIALS, AS DEFINED IN THE ATOMIC ENERGY ACT OF 1954 (AEA), ARE REGULATED AT THE U.S. DEPARTMENT OF ENERGY (DOE) FACILITIES EXCLUSIVELY BY DOE ACTING PURSUANT TO ITS AEA AUTHORITY. DOE ASSERTS, THAT PURSUANT TO THE AEA, IT HAS SOLE AND EXCLUSIVE RESPONSIBILITY AND AUTHORITY TO REGULATE SOURCE, SPECIAL NUCLEAR, AND BYPRODUCT MATERIAL AT DOE-OWNED NUCLEAR FACILITIES. INFORMATION CONTAINED HEREIN ON RADIONUCLIDES IS PROVIDED FOR PROCESS DESCRIPTION PURPOSES ONLY.

Q — QUALITY DESIGNATOR

REVISION HISTORY

REV	DESCRIPTION	ORG	CHKD	RVWD	APVD	DATE
1	ISSUED FOR PERMITTING USE	U.O.	SC	GJ	DV	3-29-05
0	ISSUED FOR PERMITTING USE	JM	TMG	DMY	JFS	2-9-04

ISSUED BY RPP-WTP PDC — ISSUE STAMP

PROJECT No.	24590	
SITE	HANFORD	
AREA	200E	
BUILDING No.	30	
	BY	DATE
ORIGINATOR	JASON MEDINA	2-6-04
CHECKER	TM GALIOTO	2-6-04
APPROVER	JOHN F SCHNEIDER	2-9-04
REVIEWER	DONNA YARABROUGH	2-6-04

CONTENT APPLICABLE TO ALARA? [X] YES [ ] NO
ADR NO. N/A REV:

BECHTEL

RIVER PROTECTION PROJECT
WASTE TREATMENT PLANT
2435 STEVENS CENTER PLACE
RICHLAND, WA 99352

CONTRACT No: DE-AC27-01RV14136

P&ID HLW CANISTER DECONTAMINATION HANDLING SYSTEM

SCALE: NONE

24590-HLW-M6-HDH-P0001

REV 1

"E" SIZE 44x34
COMPUTER GENERATED - MANUAL CHANGES NOT PERMITTED

R10523596

03/29/2005 06:01:25 AM

PLOTTED BY: eweb0
C:\Work\dms05070\HLW\HDH\P0001.dgn

FORM E_SDN.DGN 02/2003

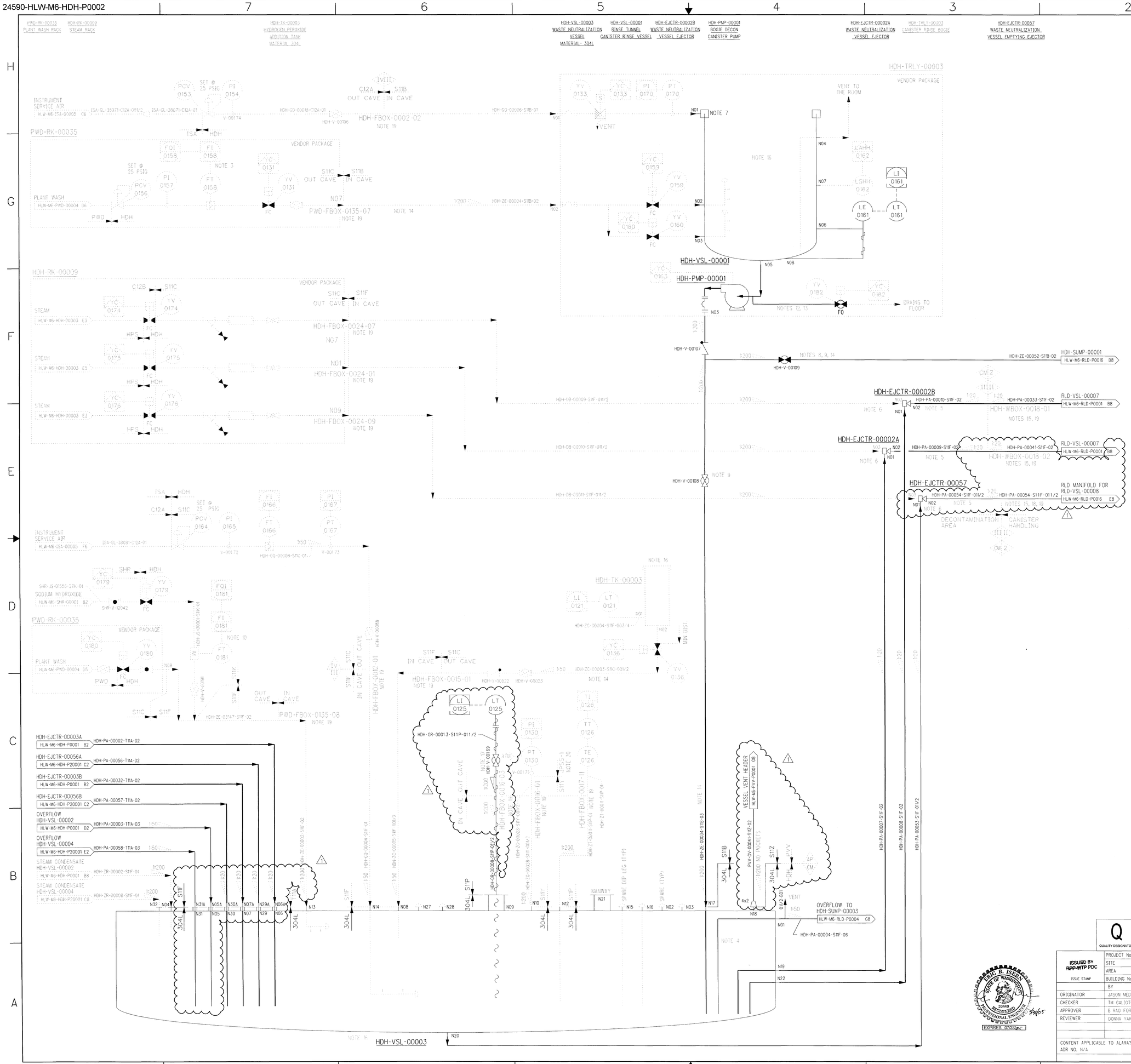

NOTES:

THE FOLLOWING NOTES ARE GENERAL NOTES FOR HDH SYSTEM.

1. SEE DRAWINGS 24590-WTP-M6-50-P0001 THROUGH 24590-WTP-M6-50-P0006 FOR GENERAL NOTES, SYMBOLS AND LEGEND.
2. DELETED.

THE FOLLOWING NOTES ARE SPECIFIC TO THIS DRAWING.

3. DELETED.
4. INLET ELEVATION OF OVERFLOW LINE SHALL BE 4" LOWER THAN THAT OF EJECTOR SUCTION FOR HDH-EJCTR-00002A/B.
5. EJECTOR DISCHARGE PIPING TO HAVE A MINIMUM LENGTH OF STRAIGHT PIPE EQUIVALENT TO 10 TIMES OF PIPE OUTSIDE DIAMETER BEFORE THE FIRST BEND.
6. EJECTOR TO BE LOCATED AT THE LOWEST SECTION OF SUCTION PIPING.
7. AN INFLATABLE SEAL IS INSTALLED AT THE TOP OF THE CONTAINER.
8. DRAIN LINE HDH-ZE-00052-S11B-02 TO BE LOCATED AT THE LOWEST POINT OF PUMP DISCHARGE PIPING.
9. VALVES TO BE LOCATED NEAR THE SHIELD DOOR TO ALLOW FOR OPERATOR'S MANUAL OPERATION AT THE SHIELD DOOR OPENING.
10. VALVE UPSTREAM OF TOTALING FLOW INDICATOR (FQI) IS CONTROLLED BY THE FQI. SEE NOTE 2.
11. CONTENTS OF THIS DOCUMENT ARE DANGEROUS WASTE PERMIT AFFECTING.
12. GRAVITY DRAIN FOR RECOVERY OPERATIONS.
13. LOCATE AT LOWEST POINT POSSIBLE FOR OPTIMUM DRAIN.
14. PIPING IS COMMERCIAL QUALITY AND SEISMIC CATEGORY III.
15. THE LINES THROUGH THE WALLBOX ARE REQUIRED TO HAVE ONE BAROMETRIC HEAD (MINIMUM 34 FEET) ABOVE THE OVERFLOW OF HDH-VSL-00003.
16. TANK/VESSEL IS COMMERCIAL QUALITY AND SEISMIC CATEGORY III.
17. RADAR GUIDE IS TO BE ROUTED TO TRANSMITTER. A FULL PORT BALL VALVE IS REQUIRED FOR ISOLATION PURPOSE AT TRANSMITTER END OF GUIDE TUBE.
18. THIS IS A STRAIGHT THROUGH WALL PENETRATION.
19. WALL/FLOOR JOGGLED OR STRAIGHT THROUGH PENETRATIONS SHALL BE DESIGNATED QL-1/SC-I.
20. DELETED.
21. DELETED.
22. THE PORTIONS OF THIS DRAWING SHOWN IN PHANTOM ARE CONSIDERED NON-PERMIT AFFECTING AND ARE NOT SUBJECT TO THE REGULATORY REQUIREMENTS OF THE WAC CODE FOR THE DANGEROUS WASTE PERMIT TO THE EXTENT THAT THOSE PORTIONS DO NOT IMPACT DANGEROUS WASTE AREAS/OPERATIONS.

HOLD/OPEN ITEMS:

1. DELETED.
2. DELETED.
3. DELETED.

REFERENCES:

1. PROCESS FLOW DIAGRAM HLW VITRIFICATION HLW CANISTER DECON (SYSTEM HDH), 24590-HLW-M5-V17T-P0006.
2. DELETED.
3. DELETED.
4. DELETED.

PLEASE NOTE THAT SOURCE, SPECIAL NUCLEAR AND BYPRODUCT MATERIALS, AS DEFINED IN THE ATOMIC ENERGY ACT OF 1954 (AEA), ARE REGULATED AT THE U.S. DEPARTMENT OF ENERGY (DOE) FACILITIES EXCLUSIVELY BY DOE ACTING PURSUANT TO ITS AEA AUTHORITY. DOE ASSERTS, THAT PURSUANT TO THE AEA, IT HAS SOLE AND EXCLUSIVE RESPONSIBILITY AND AUTHORITY TO REGULATE SOURCE, SPECIAL NUCLEAR, AND BYPRODUCT MATERIAL AT DOE-OWNED NUCLEAR FACILITIES. INFORMATION CONTAINED HEREIN ON RADIONUCLIDES IS PROVIDED FOR PROCESS DESCRIPTION PURPOSES ONLY.

REV	DESCRIPTION	ORG	CHKD	RVWD	APVD	DATE
1	ISSUED FOR PERMITTING USE					3-29-05
0	ISSUED FOR PERMITTING USE	JM	TMG	DMY	MLW	2-9-04

Q — QUALITY DESIGNATOR

REVISION HISTORY

ISSUED BY RPP-WTP PDC — ISSUE STAMP

PROJECT No.	24590	
SITE	HANFORD	
AREA	200E	
BUILDING No.	30	
	BY	DATE
ORIGINATOR	JASON MEDINA	2-9-04
CHECKER	TM GALIOTO	2-9-04
APPROVER	B RAO FOR JS	2-9-04
REVIEWER	DONNA YARABROUGH	2-9-04

CONTENT APPLICABLE TO ALARA? [X] YES [ ] NO
ADR NO. N/A REV:

BECHTEL

RIVER PROTECTION PROJECT
WASTE TREATMENT PLANT
2435 STEVENS CENTER PLACE
RICHLAND, WA 99352

CONTRACT No: DE-AC27-01RV14136

P&ID - HLW CANISTER DECONTAMINATION HANDLING SYSTEM

SCALE: NONE

24590-HLW-M6-HDH-P0002 — REV 1

ERIC B. ISEEN — STATE OF WASHINGTON — 33449 — REGISTERED PROFESSIONAL ENGINEER — 3-29-05 — EXPIRES: 07/28/05

FORM E_SON.DGN 02/2003

'E' SIZE - 44x34 COMPUTER GENERATED - MANUAL CHANGES NOT PERMITTED

R10523597

PLOTTED BY: ewesto
C:\Work\dms05370\HLW\HDH\P0002.dgn
03/28/2005 10:23:37 AM

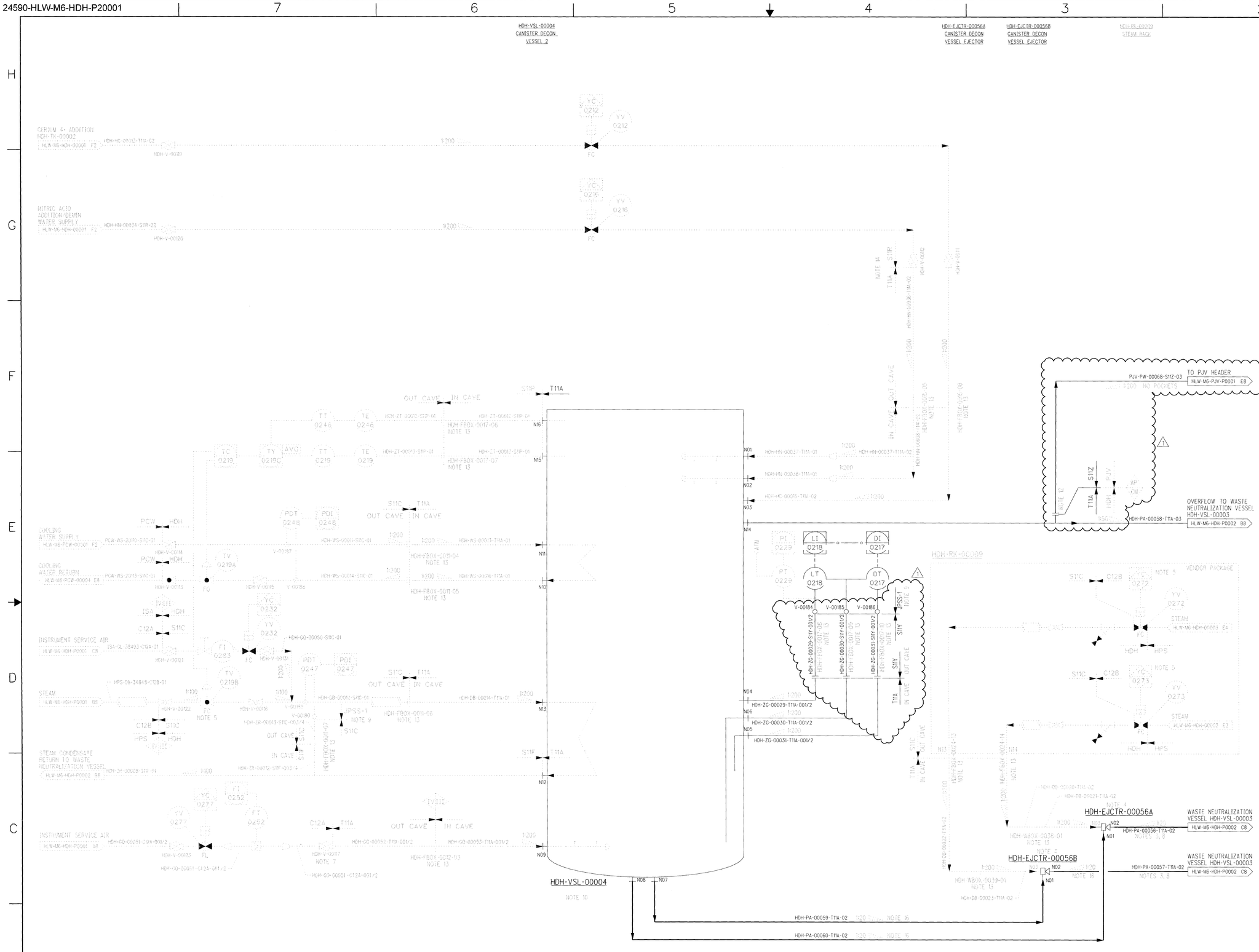

NOTES:

THE FOLLOWING NOTES ARE GENERAL NOTES FOR HDH SYSTEM.

1. SEE DRAWINGS 24590-WTP-M6-50-P0001 THROUGH 24590-WTP-M6-50-P0006 FOR GENERAL NOTES, SYMBOLS AND LEGEND.
2. DELETED.

THE FOLLOWING NOTES ARE SPECIFIC TO THIS DRAWING.

3. EJECTOR DISCHARGE PIPING TO HAVE A MINIMUM LENGTH OF STRAIGHT PIPE EQUIVALENT TO 10 TIMES OF PIPE OUTSIDE DIAMETER BEFORE FIRST BEND.
4. EJECTOR TO BE LOCATED AT THE LOWEST SECTION OF SUCTION PIPING.
5. THE VALVE SHALL BE A SLOW OPENING VALVE TO PREVENT STEAM CONDENSATE HAMMER.
6. CONTENTS OF THIS DOCUMENT ARE DANGEROUS WASTE PERMIT AFFECTING.
7. A FLANGE KIT IS REQUIRED BETWEEN CARBON STEEL AND TITANIUM FLANGES TO PREVENT GALVANIC CORROSION.
8. THE HIGHEST SECTION OF THE EJECTOR DISCHARGE LINES TO BE ABOVE OVERFLOW NOZZLE ELEVATION OF HDH-VSL-00004.
9. DELETED.
10. VESSEL IS COMMERCIAL QUALITY AND SEISMIC CATEGORY III.
11. ALL PIPING IS COMMERCIAL QUALITY AND SEISMIC CATEGORY III UNLESS OTHERWISE NOTED.
12. BOTH SYSTEM AND MATERIAL SPECIFICATION BREAKS ARE TO BE LOCATED AT THE FLANGE INTERFACE OF THE IN-LINE TEE.
13. WALL/FLOOR JOGGLED PENETRATION SHALL BE DESIGNATED QL-1/SC-I.
14. A HELICOFLEX GASKET IS TO BE UTILIZED AT THE FLANGE INTERFACE BETWEEN STAINLESS STEEL AND TITANIUM.
15. DELETED.
16. SLOPE THE LINE AT A MINIMUM 1:20 UNLESS CONSTRAINED BY PHYSICAL LIMITATIONS. IF CONSTRAINED BY PHYSICAL LIMITATION, THE SLOPE MAY BE REDUCED TO 1:50.
17. THE PORTIONS OF THIS DRAWING SHOWN IN PHANTOM ARE CONSIDERED NON-PERMIT AFFECTING AND ARE NOT SUBJECT TO THE REGULATORY REQUIREMENTS OF THE WAC CODE FOR THE DANGEROUS WASTE PERMIT TO THE EXTENT THAT THOSE PORTIONS DO NOT IMPACT DANGEROUS WASTE AREAS/OPERATIONS.

HOLD/OPEN ITEMS:

1. DELETED.

REFERENCES:

1. PROCESS FLOW DIAGRAM HLW VITRIFICATION HLW CANISTER DECON (SYSTEM HDH), 24590-HLW-M5-V17T-P0006.
2. DELETED.
3. DELETED.
4. DELETED.

PLEASE NOTE THAT SOURCE, SPECIAL NUCLEAR AND BYPRODUCT MATERIALS, AS DEFINED IN THE ATOMIC ENERGY ACT OF 1954 (AEA), ARE REGULATED AT THE U.S. DEPARTMENT OF ENERGY (DOE) FACILITIES EXCLUSIVELY BY DOE ACTING PURSUANT TO ITS AEA AUTHORITY. DOE ASSERTS, THAT PURSUANT TO THE AEA, IT HAS SOLE AND EXCLUSIVE RESPONSIBILITY AND AUTHORITY TO REGULATE SOURCE, SPECIAL NUCLEAR, AND BYPRODUCT MATERIAL AT DOE-OWNED NUCLEAR FACILITIES. INFORMATION CONTAINED HEREIN ON RADIONUCLIDES IS PROVIDED FOR PROCESS DESCRIPTION PURPOSES ONLY.

REV	DESCRIPTION	ORG	CHKD	RVWD	APVD	DATE
1	ISSUED FOR PERMITTING USE					3-29-05
0	ISSUED FOR PERMITTING USE	JM	TMC	DMY	JFS	2-9-04

Q
QUALITY DESIGNATOR

REVISION HISTORY

ISSUED BY RPP-WTP PDC
ISSUE STAMP

PROJECT No.	24590
SITE	HANFORD
AREA	200E
BUILDING No.	30

	BY	DATE
ORIGINATOR	JASON MEDINA	2-6-04
CHECKER	TM GALIOTO	2-6-04
APPROVER	JOHN F SCHNEIDER	2-9-04
REVIEWER	DONNA YARBROUGH	2-6-04

CONTENT APPLICABLE TO ALARA? [X] YES [ ] NO
ADR NO. N/A REV:

ERIC B. ISBEN, STATE OF WASHINGTON, 33449, REGISTERED PROFESSIONAL ENGINEER
EXPIRES: 07/28/05

BECHTEL

RIVER PROTECTION PROJECT
WASTE TREATMENT PLANT
2435 STEVENS CENTER PLACE
RICHLAND, WA 99352

CONTRACT No: DE-AC27-01RV14136

P&ID - HLW CANISTER DECONTAMINATION HANDLING SYSTEM

SCALE: NONE

24590-HLW-M6-HDH-P20001

REV 1

FORM E_SDNUDGN 02/2003

"E" SIZE - 44x34
COMPUTER GENERATED - MANUAL CHANGES NOT PERMITTED

R10523595

03/29/2005 06:03:41 AM

PLOTTED BY: rwwood
P:\Users\rwwood\5172\HLW\M6\HDHP20001.dgn

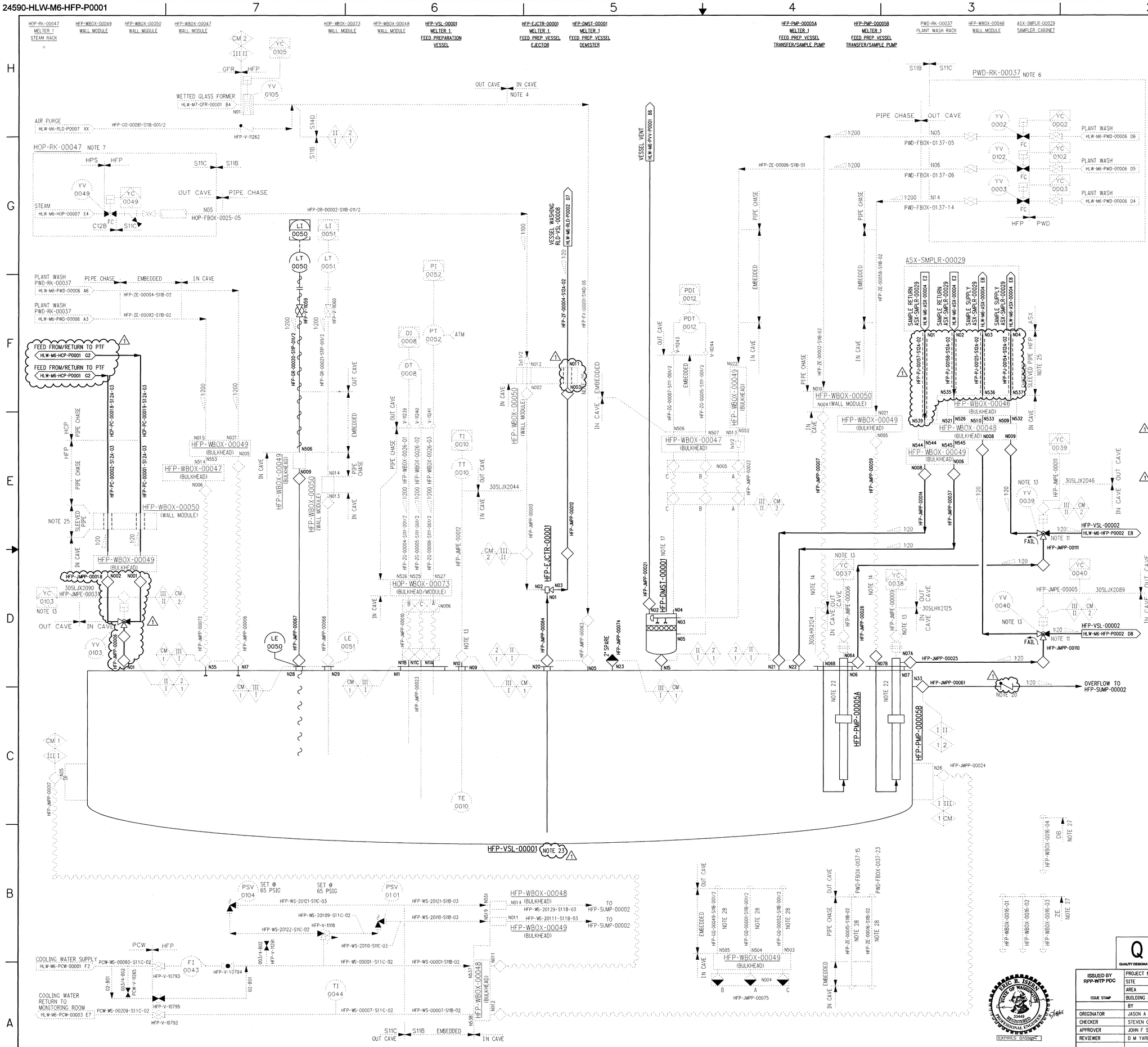

NOTES:

THE FOLLOWING NOTES ARE GENERAL NOTES FOR HFP SYSTEM

1. SEE DRAWINGS 24590-WTP-M6-50-P0001 THROUGH 24590-WTP-M6-50-P0006 FOR GENERAL NOTES, SYMBOLS AND LEGEND.
2. DELETED.
3. DELETED.

THE FOLLOWING NOTES ARE SPECIFIC TO THIS DRAWING

4. WETTED GLASS FORMER LINE TO HAVE MINIMUM SLOPE OF 60°. THROUGH FLOOR PENETRATION IS SLEEVED AND SLEEVE IS SLOPED SAME AS LINE SLOPE.
5. DELETED.
6. DELETED.
7. DELETED.
8. DELETED.
9. DELETED.
10. DELETED.
11. LOCATE 3-WAY VALVES AS CLOSE TO HFP-VSL-00002 AS POSSIBLE.
12. DELETED.
13. DELETED.
14. PLANT WASH USED FOR PUMP PRIMING AND PIPE FLUSH AFTER EACH TRANSFER.
15. DELETED.
16. THE MINIMUM REQUIREMENT FOR RADIOACTIVE SLURRY PIPES/JUMPERS IS QUALITY LEVEL 2 AND SEISMIC CATEGORY II. THE MINIMUM FOR ALL OTHERS IS COMMERCIAL QUALITY AND SEISMIC CATEGORY III EXCEPT FOR THOSE LINES THAT ARE SC-II OVER SC-I. QUALITY LEVEL 1 AND SEISMIC CATEGORY I IS FOR VESSEL ONLY.
17. DEMISTER IS MOUNTED DIRECTLY TO VESSEL NOZZLE. LOCATE DEMISTER IN HIGH POINT OF VESSEL HEAD (AS CLOSE AS POSSIBLE).
18. DELETED.
19. DELETED.
20. OVERFLOW JUMPER TO PROVIDE UNRESTRICTED FLOW DIRECTED TOWARD SUMP. FLAPPER TO MINIMIZE AIR IN-LEAKAGE THROUGH OVERFLOW NOZZLE OPENING.
21. CONTENTS OF THIS DOCUMENT ARE DANGEROUS WASTE PERMIT AFFECTING.
22. THE MINIMUM QUALITY LEVELS AND SEISMIC CATEGORIES OF THE PUMP COMPONENTS ARE AS FOLLOWS: PUMP BODY AND MOTOR ARE COMMERCIAL GRADE (APC) AND SC-II. CONTROLLERS (YC) AND CONNECTIONS ARE COMMERCIAL GRADE (APC) AND SC-III.
23. AGITATOR AND SPARGE LINES ARE SHOWN ON P&ID 24590-HLW-M6-HFP-P0007.
24. DELETED.
25. SLEEVED PIPE IS INDICATED BY TWO DASHED LINES SURROUNDING A PIPELINE. SLOPE SLEEVE INTO CAVE WITH SAME SLOPE AS PIPELINE.
26. DELETED
27. PIPE IN WALL PENETRATIONS IS 2" S11B, QUALITY LEVEL 1 AND SEISMIC CATEGORY I.
28. THE PORTIONS OF THIS DRAWING SHOWN IN PHANTOM ARE CONSIDERED NON-PERMIT AFFECTING AND ARE NOT SUBJECT TO THE REGULATORY REQUIREMENTS OF THE WAC CODE FOR THE DANGEROUS WASTE PERMIT TO THE EXTENT THAT THOSE PORTIONS DO NOT IMPACT DANGEROUS WASTE AREAS/OPERATIONS.

HOLD/OPEN ITEMS:

1. DELETED.
2. DELETED.
3. DELETED.
4. DELETED
5. DELETED.
6. DELETED.

REFERENCES:

1. 24590-HLW-M5-V17T-P0001, "PROCESS FLOW DIAGRAM HLW RECEIPT & FEED PREPARATION (SYSTEM HCP, GFR, & HFP)".
2. 24590-HLW-3YD-HFP-00001, "SYSTEM DESCRIPTION FOR HLW MELTER FEED (SYSTEM HFP)".

PLEASE NOTE THAT SOURCE, SPECIAL NUCLEAR AND BYPRODUCT MATERIALS, AS DEFINED IN THE ATOMIC ENERGY ACT OF 1954 (AEA), ARE REGULATED AT THE U.S. DEPARTMENT OF ENERGY (DOE) FACILITIES EXCLUSIVELY BY DOE ACTING PURSUANT TO ITS AEA AUTHORITY. DOE ASSERTS, THAT PURSUANT TO THE AEA, IT HAS SOLE AND EXCLUSIVE RESPONSIBILITY AND AUTHORITY TO REGULATE SOURCE, SPECIAL NUCLEAR, AND BYPRODUCT MATERIAL AT DOE-OWNED NUCLEAR FACILITIES. INFORMATION CONTAINED HEREIN ON RADIONUCLIDES IS PROVIDED FOR PROCESS DESCRIPTION PURPOSES ONLY.

REV	DESCRIPTION	ORG	CHKD	RVWD	APVD	DATE
1	ISSUED FOR PERMIT USE	SC	[illegible]	[illegible]	TV	5-18-05
0	ISSUED FOR PERMIT USE	JM	SJC	DMY	JFS	5-5-04

REVISION HISTORY

Q QUALITY DESIGNATOR

ISSUED BY RPP-WTP PDC		
ISSUE STAMP	PROJECT No.	24590
	SITE	HANFORD
	AREA	200E
	BUILDING No.	30
	BY	DATE
ORIGINATOR	JASON A MEDINA	5/5/04
CHECKER	STEVEN CROSS	5/5/04
APPROVER	JOHN F SCHNEIDER	5/5/04
REVIEWER	D M YARBROUGH	5/5/04

CONTENT APPLICABLE TO ALARA? [X] YES [ ] NO
ADR NO. N/A REV:
SAFETY SCREEN REQUIRED? [ ] YES [X] NO EMS INITIAL IF YES

RICHARD B. JENSEN, STATE OF WASHINGTON, REGISTERED PROFESSIONAL ENGINEER 33449 — EXPIRES: 07/28/05

BECHTEL

RIVER PROTECTION PROJECT
WASTE TREATMENT PLANT
2435 STEVENS CENTER PLACE
RICHLAND, WA 99354

CONTRACT No: DE-AC27-01RV14136

P&ID - HLW
MELTER FEED PROCESS SYSTEM
MELTER FEED PREPARATION VESSEL HFP-VSL-00001

SCALE: NONE

24590-HLW-M6-HFP-P0001

REV 1

E SIZE - 44x34
COMPUTER GENERATED - MANUAL CHANGES NOT PERMITTED

SAFETY SCREEN IS REQUIRED FOR DRAWING TYPES IDENTIFIED IN 24590-WTP-GPP-SREG-002

R10571783

05/18/2005 07:27:56 AM

PLOTTED BY: eewebb
C:\Work\dms05070\HLW\M6\HFP\P0001.dgn

FORM E_SDN.DGN 02/2003

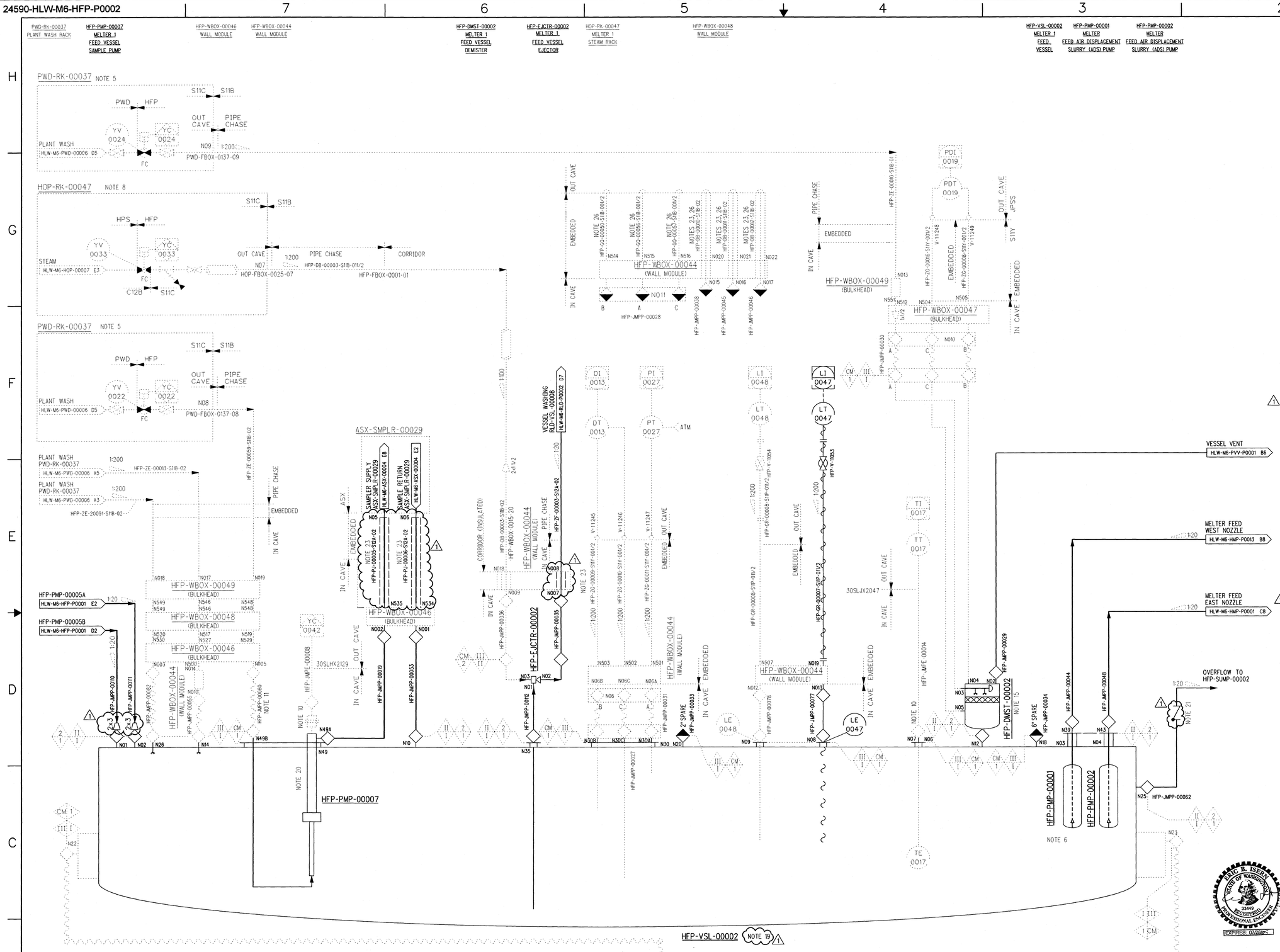

NOTES:

THE FOLLOWING NOTES ARE GENERAL NOTES FOR HFP SYSTEM

1. SEE DRAWINGS 24590-WTP-M6-50-P0001 THROUGH 24590-WTP-M6-50-P0006 FOR GENERAL NOTES, SYMBOLS AND LEGEND.
2. DELETED.
3. DELETED.

THE FOLLOWING NOTES ARE SPECIFIC TO THIS DRAWING

4. DELETED.
5. DELETED.
6. DELETED.
7. DELETED.
8. DELETED.
9. DELETED.
10. DELETED.
11. PLANT WASH USED FOR PUMP PRIMING AND PIPE FLUSH AFTER EACH TRANSFER.
12. DELETED.
13. THE MINIMUM REQUIREMENT FOR RADIOACTIVE SLURRY PIPES/JUMPERS IS QUALITY LEVEL 2 AND SEISMIC CATEGORY II. THE MINIMUM FOR ALL OTHERS IS COMMERCIAL QUALITY AND SEISMIC CATEGORY III EXCEPT FOR THOSE LINES THAT ARE SC-II OVER SC-I. QUALITY LEVEL 1 AND SEISMIC CATEGORY I IS FOR VESSEL ONLY.
14. DELETED.
15. DEMISTER IS MOUNTED DIRECTLY TO VESSEL NOZZLE. LOCATE DEMISTER ON HIGH POINT OF VESSEL HEAD (AS CLOSE AS POSSIBLE).
16. DELETED.
17. DELETED.
18. CONTENTS OF THIS DOCUMENT ARE DANGEROUS WASTE PERMIT AFFECTING.
19. AGITATOR AND SPARGE LINES ARE SHOWN ON P&ID 24590-HLW-M6-HFP-P0008.
20. THE MINIMUM QUALITY LEVELS AND SEISMIC CATEGORIES OF THE PUMP COMPONENTS ARE AS FOLLOWS:
    - PUMP BODY AND MOTOR ARE COMMERCIAL GRADE (APC) AND SC II.
    - CONTROLLERS (YC) AND CONNECTIONS ARE COMMERCIAL GRADE (APC) AND SC III.
21. OVERFLOW JUMPER TO PROVIDE UNRESTRICTED FLOW DIRECTED TOWARD SUMP. FLAPPER TO MINIMIZE AIR IN-LEAKAGE THROUGH NOZZLE OPENING.
22. REVISED QUALITY LEVEL AND SEISMIC CATEGORIES. REVISED VENDOR PACKAGE INTERFACES. MODIFIED PSV DISCHARGE THROUGH WALLBOXES. ADDED INSTRUMENT AND ELECTRICAL JUMPERS AND PENETRATIONS.
23. SLEEVED LINES ARE INDICATED BY TWO DASHED LINES SURROUNDING A PIPELINE. SLOPE SLEEVE INTO CAVE WITH SAME SLOPE AS PIPELINE.
24. DELETED.
25. PIPING IN WALL PENETRATION IS 2" S11B. QUALITY LEVEL 1 AND SEISMIC CATEGORY I
26. THE PORTIONS OF THIS DRAWING SHOWN IN PHANTOM ARE CONSIDERED NON-PERMIT AFFECTING AND ARE NOT SUBJECT TO THE REGULATORY REQUIREMENTS OF THE WAC CODE FOR THE DANGEROUS WASTE PERMIT TO THE EXTENT THAT THOSE PORTIONS DO NOT IMPACT DANGEROUS WASTE AREAS/OPERATIONS.

HOLD/OPEN ITEMS:

1. DELETED.
2. DELETED.
3. DELETED.
4. DELETED.
5. DELETED

REFERENCES:

1. 24590-HLW-M5-V17T-P0001, "PROCESS FLOW DIAGRAM HLW RECEIPT & FEED PREPARATION (SYSTEM HCP, GFR, & HFP)".
2. 24590-HLW-3YD-HFP-00001, "SYSTEM DESCRIPTION FOR HLW MELTER FEED (SYSTEM HFP)".

STATE OF WASHINGTON — ERIC B. ISBERNER — 33449 — REGISTERED PROFESSIONAL ENGINEER
EXPIRES: 07/28/05

PLEASE NOTE THAT SOURCE, SPECIAL NUCLEAR AND BYPRODUCT MATERIALS, AS DEFINED IN THE ATOMIC ENERGY ACT OF 1954 (AEA), ARE REGULATED AT THE U.S. DEPARTMENT OF ENERGY (DOE) FACILITIES EXCLUSIVELY BY DOE ACTING PURSUANT TO ITS AEA AUTHORITY. DOE ASSERTS, THAT PURSUANT TO THE AEA, IT HAS SOLE AND EXCLUSIVE RESPONSIBILITY AND AUTHORITY TO REGULATE SOURCE, SPECIAL NUCLEAR, AND BYPRODUCT MATERIAL AT DOE-OWNED NUCLEAR FACILITIES. INFORMATION CONTAINED HEREIN ON RADIONUCLIDES IS PROVIDED FOR PROCESS DESCRIPTION PURPOSES ONLY.

REV	DESCRIPTION	ORG	CHKD	RVWD	APVD	DATE
1	ISSUED FOR PERMIT USE	SC	RR	EL	JV	5-18-05
0	ISSUED FOR PERMIT USE	JM	SJC	DMY	JFS	4-1-03

Q — QUALITY DESIGNATOR

REVISION HISTORY

ISSUED BY RPP-WTP PDC

PROJECT No.	24590
SITE	HANFORD
AREA	200E
BUILDING No.	30

ISSUE STAMP

	BY	DATE
ORIGINATOR	JASON A MEDINA	5/5/04
CHECKER	STEVEN CROSS	5/5/04
APPROVER	JOHN F SCHNEIDER	5/5/04
REVIEWER	D M YARBROUGH	5/5/04

CONTENT APPLICABLE TO ALARA? [X] YES [ ] NO
ADR NO. N/A REV:
SAFETY SCREEN REQUIRED? [ ] YES [X] NO EKNS INITIAL IF YES

BECHTEL

RIVER PROTECTION PROJECT
WASTE TREATMENT PLANT
2435 STEVENS CENTER PLACE
RICHLAND, WA 99354

CONTRACT No: DE-AC27-01RV14136

P&ID - HLW
MELTER FEED PROCESS SYSTEM
MELTER FEED VESSEL
HFP-VSL-00002

SCALE: NONE

24590-HLW-M6-HFP-P0002

REV 1

R10017785

SAFETY SCREEN IS REQUIRED FOR DRAWING TYPES IDENTIFIED IN 24590-WTP-GPP-SREG-002

"E" SIZE - 44x34 COMPUTER GENERATED - MANUAL CHANGES NOT PERMITTED

FORM E_SDN.DGN 02/2003

05/18/2005 07:28:36 AM

PLOTTED BY: eewebb
C:\Work\dms05070\HLW\M6\HFP\P0002r1.dgn

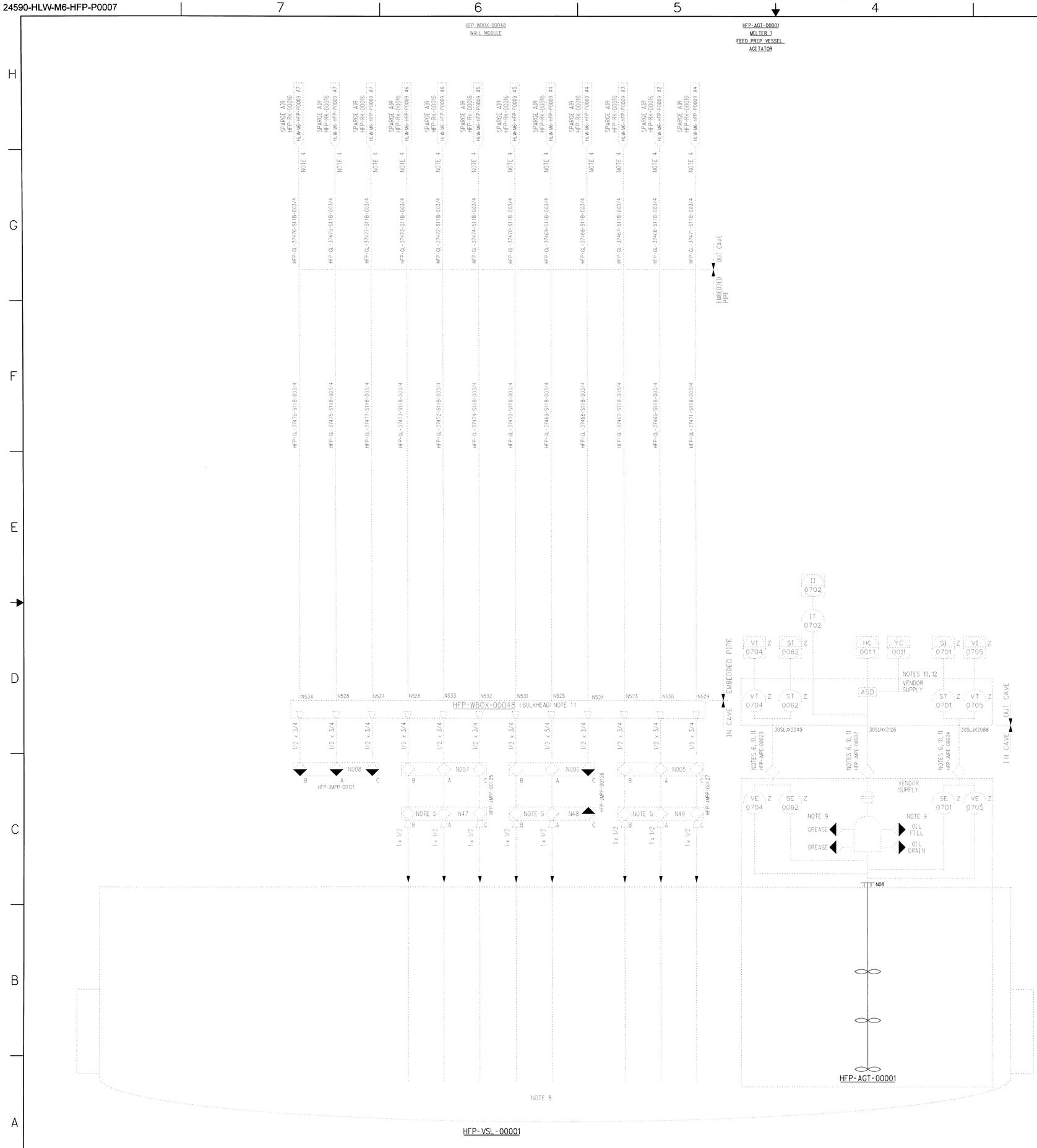

NOTES:

THE FOLLOWING NOTES ARE GENERAL NOTES FOR HFP SYSTEM

1. SEE DRAWINGS 24590-WTP-M6-50-P0001 THROUGH 24590-WTP-M6-50-P0006 FOR GENERAL NOTES, SYMBOLS AND LEGEND.
2. DELETED.
3. DELETED.

THE FOLLOWING NOTES ARE SPECIFIC TO THIS DRAWING

4. THIS LINE IS QUALITY LEVEL 1 AND SEISMIC CATEGORY I.
5. 3-WAY CONNECTOR BLOCK TO BE MOUNTED ON VESSEL BULKHEAD. INDIVIDUAL JUMPER CONNECTION SIZE IS 1/2 INCH. 1 INCH SPARGE PIPING WILL BE CONNECTED TO EACH JUMPER LEG (WITH REDUCER) AND ROUTED BY VESSEL FABRICATOR INTO THE VESSEL.
6. DELETED.
7. CONTENTS OF THIS DOCUMENT ARE DANGEROUS WASTE PERMIT AFFECTING.
8. END OF SPARGERS (8 REQ'D) TO BE LOCATED AT A RADIUS OF 36 INCHES FROM VESSEL CENTER AND 1 INCH OFF VESSEL BOTTOM.
9. OIL FILL AND DRAIN CONNECTORS SHALL BE 3/4" STAUBLI RBE VALVED PLUG WITH INTEGRAL VALVE, DUST CAP, AND FIXING RING. GREASE CONNECTORS SHALL BE 3/8" STAUBLI RBE UNVALVED PLUG WITH DUST CAP AND FIXING RING.
10. THE MINIMUM QUALITY LEVELS AND SEISMIC CATEGORIES OF THE AGITATOR COMPONENTS ARE AS FOLLOWS: AGITATOR BODY, MOTOR JUMPER AND MOTOR ARE COMMERCIAL GRADE (APC) AND SC-II. HAND CONTROLLERS (HC AND YC), AND ASD ARE COMMERCIAL GRADE (APC) AND SC-III. ALL OTHER COMPONENTS, INCLUDING THE SPEED SENSORS (SI/ST), VIBRATION SENORS (VI, VT), AND CONNECTING JUMPERS ARE QL-2 AND SC-I.
11. JOGGLED PENETRATIONS AND BULKHEAD STRUCTURES INCLUDING INTERNAL PIPING ARE QUALITY LEVEL 1 AND SEISMIC CATEGORY I.
12. LOCATE REDUNDANT VIBRATION/SPEED TRANSMITTERS AND INDICTORS IN SEPARATE FIRE AREAS.
13. THE PORTIONS OF THIS DRAWING SHOWN IN PHANTOM ARE CONSIDERED NON-PERMIT AFFECTING AND ARE NOT SUBJECT TO THE REGULATORY REQUIREMENTS OF THE WAC CODE FOR THE DANGEROUS WASTE PERMIT TO THE EXTENT THAT THOSE PORTIONS DO NOT IMPACT DANGEROUS WASTE AREAS/OPERATIONS.

REFERENCES:

1. 24590-HLW-M5-V17T-P0001, "PROCESS FLOW DIAGRAM, HLW RECEIPT AND FEED PREPARATION (SYSTEMS GFR & HFP)".
2. 24590-HLW-3YD-HFP-00001, "SYSTEM DESCRIPTION FOR HLW MELTER FEED (SYSTEM HFP)".
3. DELETED.

ERIC B. ISERN — STATE OF WASHINGTON — 33449 — REGISTERED PROFESSIONAL ENGINEER — 5/11/05
EXPIRES: 07/28/05

PLEASE NOTE THAT SOURCE, SPECIAL NUCLEAR AND BYPRODUCT MATERIALS, AS DEFINED IN THE ATOMIC ENERGY ACT OF 1954 (AEA), ARE REGULATED AT THE U.S. DEPARTMENT OF ENERGY (DOE) FACILITIES EXCLUSIVELY BY DOE ACTING PURSUANT TO ITS AEA AUTHORITY. DOE ASSERTS, THAT PURSUANT TO THE AEA, IT HAS SOLE AND EXCLUSIVE RESPONSIBILITY AND AUTHORITY TO REGULATE SOURCE, SPECIAL NUCLEAR, AND BYPRODUCT MATERIAL AT DOE-OWNED NUCLEAR FACILITIES. INFORMATION CONTAINED HEREIN ON RADIONUCLIDES IS PROVIDED FOR PROCESS DESCRIPTION PURPOSES ONLY.

Q — QUALITY DESIGNATOR

REV	DESCRIPTION	ORG	CHKD	RVWD	APVD	DATE
0	ISSUED FOR PERMITTING USE	RR	PBR	CL	TV	5-17-05

REVISION HISTORY

ISSUED BY RPP-WTP PDC — ISSUE STAMP

PROJECT No.	24590
SITE	HANFORD
AREA	200E
BUILDING No.	30

BECHTEL

RIVER PROTECTION PROJECT
WASTE TREATMENT PLANT
2435 STEVENS CENTER PLACE
RICHLAND, WA 99354

CONTRACT No: DE-AC27-01RV14136

	BY	DATE
ORIGINATOR	Steve Cross	5/12/05
CHECKER	Roger Carroll	5/12/05
APPROVER	[illegible]	5-17-05
REVIEWER	[illegible]	5/16/05

P&ID - HLW
MELTER FEED PROCESS SYSTEM
HFP-VSL-00001
AGITATION AND SPARGING

CONTENT APPLICABLE TO ALARA? [X] YES [ ] NO
ADR NO. N/A REV:
SAFETY SCREEN REQUIRED? [ ] YES [X] NO EWS INITIAL IF YES ____

SCALE: NONE

24590-HLW-M6-HFP-P0007 — REV 0

R1007178

05/11/2005 03:45:52 PM

PLOTTED BY: amathony
C:\Work\dms05070\HLW\M6HFP\P0007-0.dgn

SAFETY SCREEN IS REQUIRED FOR DRAWING TYPES IDENTIFIED IN 24590-WTP-GPP-SREG-002

"E" SIZE - 44x34
COMPUTER GENERATED - MANUAL CHANGES NOT PERMITTED

FORM E_SDN.DGN 02/2003

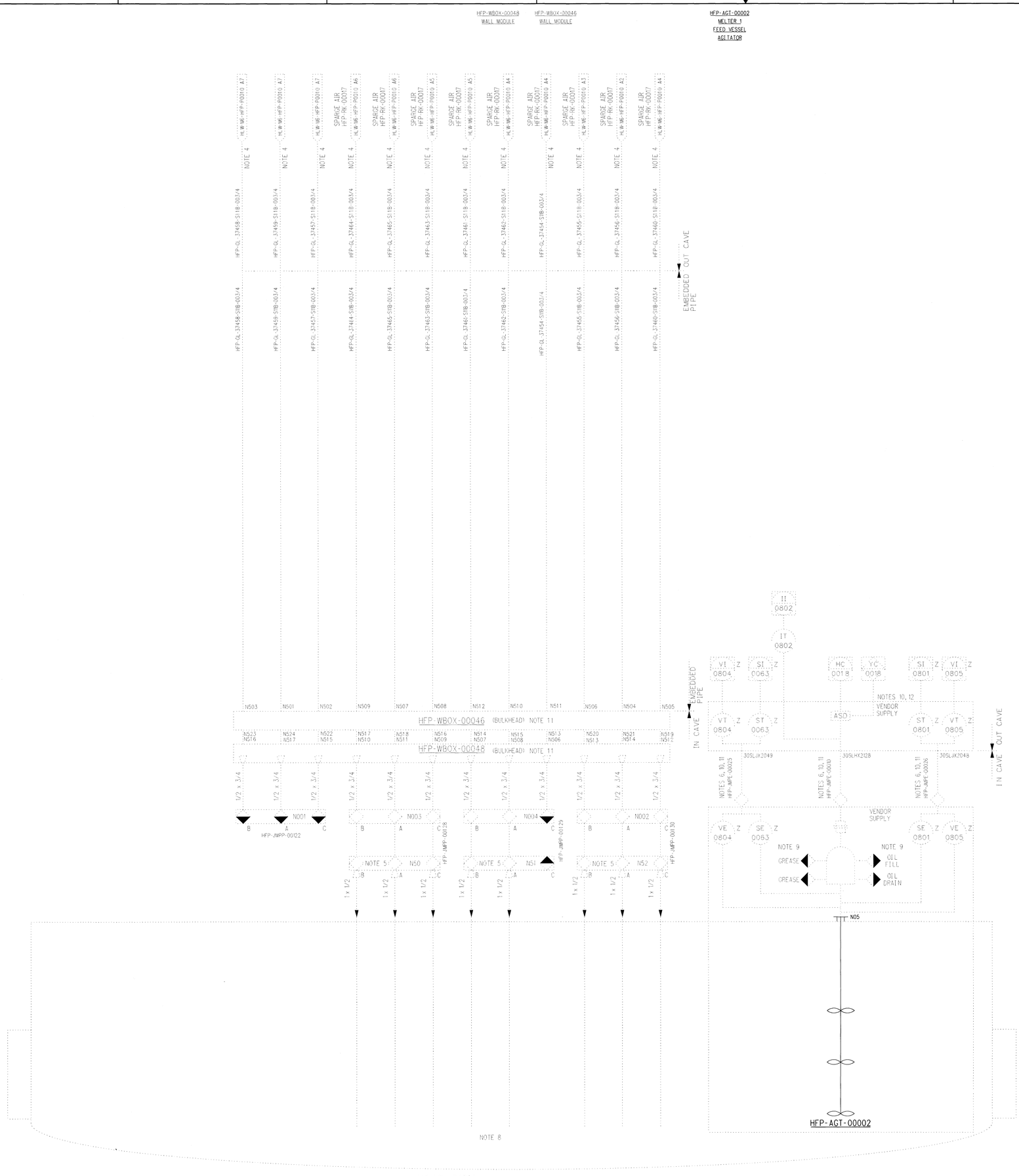

NOTES:

THE FOLLOWING NOTES ARE GENERAL NOTES FOR HFP SYSTEM

1. SEE DRAWINGS 24590-WTP-M6-50-P0001 THROUGH 24590-WTP-M6-50-P0006 FOR GENERAL NOTES, SYMBOLS AND LEGEND.
2. DELETED.
3. DELETED.

THE FOLLOWING NOTES ARE SPECIFIC TO THIS DRAWING

4. THIS LINE IS QUALITY LEVEL 1 AND SEISMIC CATEGORY I.
5. 3-WAY CONNECTOR BLOCK TO BE MOUNTED ON VESSEL BULKHEAD. INDIVIDUAL JUMPER CONNECTION SIZE IS 1/2 INCH. 1 INCH SPARGE PIPING WILL BE CONNECTED TO EACH JUMPER LEG (WITH REDUCER) AND ROUTED BY VESSEL FABRICATOR INTO VESSEL.
6. DELETED.
7. CONTENTS OF THIS DOCUMENT ARE DANGEROUS WASTE PERMIT AFFECTING.
8. END OF SPARGERS (8 REQ'D) TO BE LOCATED AT A RADIUS OF 36 INCHES FROM VESSEL CENTER AND 1 INCH OFF VESSEL BOTTOM.
9. OIL FILL AND DRAIN CONNECTORS SHALL BE 3/4" STAUBLI RBE VALVED PLUG WITH INTEGRAL VALVE, DUST CAP, AND FIXING RING. GREASE CONNECTORS SHALL BE 3/8" STAUBLI RBE UNVALVED PLUG WITH DUST CAP AND FIXING RING.
10. THE MINIMUM QUALITY LEVELS AND SEISMIC CATEGORIES OF THE AGITATOR COMPONENTS ARE AS FOLLOWS: AGITATOR BODY, MOTOR JUMPER AND MOTOR ARE COMMERCIAL GRADE (APC) AND SC-II. HAND CONTROLLER (HC AND YC), AND ASD ARE COMMERCIAL GRADE (APC) AND SC-III. ALL OTHER COMPONENTS, INCLUDING THE SPEED SENSORS (SI/ST), VIBRATION SENSORS (VI, VT), AND CONNECTING JUMPERS ARE QL-2 AND SC-I.
11. JOGGLED PENETRATIONS AND BULKHEAD STRUCTURES INCLUDING INTERNAL PIPING ARE QUALITY LEVEL 1 AND SEISMIC CATEGORY I.
12. LOCATE REDUNDANT VIBRATION/SPEED TRANSMITTERS AND INDICATORS IN SEPARATE FIRE AREAS.
13. THE PORTIONS OF THIS DRAWING SHOWN IN PHANTOM ARE CONSIDERED NON-PERMIT AFFECTING AND ARE NOT SUBJECT TO THE REGULATORY REQUIREMENTS OF THE WAC CODE FOR THE DANGEROUS WASTE PERMIT TO THE EXTENT THAT THOSE PORTIONS DO NOT IMPACT DANGEROUS WASTE AREAS/OPERATIONS.

REFERENCES:

1. 24590-HLW-M5-V17T-P0001, "PROCESS FLOW DIAGRAM, HLW RECEIPT AND FEED PREPARATION (SYSTEM GFR & HFP)".
2. 24590-HLW-3YD-HFP-00001, "SYSTEM DESCRIPTION FOR HLW MELTER FEED (SYSTEM HFP)".
3. DELETED.

ERIC B. ISEN, STATE OF WASHINGTON, 33449, REGISTERED PROFESSIONAL ENGINEER — 5/17/05
EXPIRES: 07/28/05

PLEASE NOTE THAT SOURCE, SPECIAL NUCLEAR AND BYPRODUCT MATERIALS, AS DEFINED IN THE ATOMIC ENERGY ACT OF 1954 (AEA), ARE REGULATED AT THE U.S. DEPARTMENT OF ENERGY (DOE) FACILITIES EXCLUSIVELY BY DOE ACTING PURSUANT TO ITS AEA AUTHORITY. DOE ASSERTS, THAT PURSUANT TO THE AEA, IT HAS SOLE AND EXCLUSIVE RESPONSIBILITY AND AUTHORITY TO REGULATE SOURCE, SPECIAL NUCLEAR, AND BYPRODUCT MATERIAL AT DOE-OWNED NUCLEAR FACILITIES. INFORMATION CONTAINED HEREIN ON RADIONUCLIDES IS PROVIDED FOR PROCESS DESCRIPTION PURPOSES ONLY.

Q — QUALITY DESIGNATOR

REV	DESCRIPTION	ORG	CHKD	RVWD	APVD	DATE
0	ISSUED FOR PERMITTING USE	SC	BC	[illegible]	RV	5.17.05

REVISION HISTORY

ISSUED BY RPP-WTP PDC — ISSUE STAMP

PROJECT No.	24590
SITE	HANFORD
AREA	200E
BUILDING No.	30

BECHTEL

RIVER PROTECTION PROJECT
WASTE TREATMENT PLANT
2435 STEVENS CENTER PLACE
RICHLAND, WA 99354

CONTRACT No: DE-AC27-01RV14136

	BY	DATE
ORIGINATOR	Steve Cross	5/13/05
CHECKER	Ronald Gurrell	5/13/05
APPROVER	[illegible]	5.17.05
REVIEWER	[illegible]	5/16/05

CONTENT APPLICABLE TO ALARA? [X] YES [ ] NO
ADR NO. N/A REV:
SAFETY SCREEN REQUIRED? [ ] YES [X] NO EMS INITIAL IF YES

P&ID - HLW
MELTER FEED PROCESS SYSTEM
HFP-VSL-00002
AGITATION AND SPARGING

SCALE: NONE

24590-HLW-M6-HFP-P0008

REV 0

FORM E_SDN.DGN 02/2003

SAFETY SCREEN IS REQUIRED FOR DRAWING TYPES IDENTIFIED IN 24590-WTP-GPP-SREG-002

"E" SIZE - 44x34
COMPUTER GENERATED - MANUAL CHANGES NOT PERMITTED

R10571790

05/12/2005 02:43:32

PLOTTED BY: emahoney
C:\Work\dms05070\HLW\M6\HFP\P0008r0.dgn

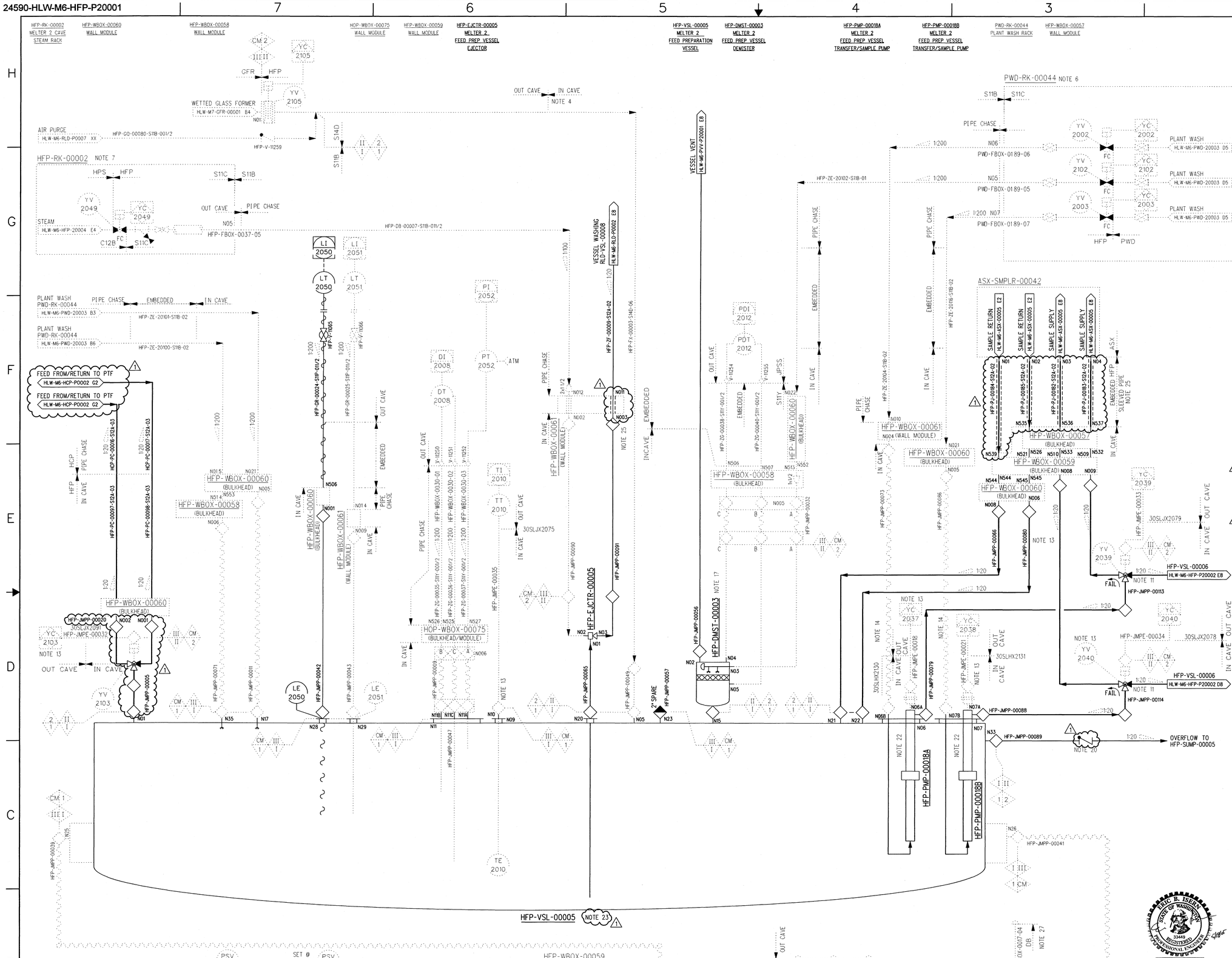

NOTES:

THE FOLLOWING NOTES ARE GENERAL NOTES FOR HFP SYSTEM

1. SEE DRAWINGS 24590-WTP-M6-50-P0001 THROUGH 24590-WTP-M6-50-P0006 FOR GENERAL NOTES, SYMBOLS AND LEGEND.
2. DELETED.
3. DELETED.

THE FOLLOWING NOTES ARE SPECIFIC TO THIS DRAWING

4. WETTED GLASS FORMER LINE TO HAVE MINIMUM SLOPE OF 60°. THROUGH FLOOR PENETRATION IS SLEEVED AND SLEEVE IS SLOPED SAME AS LINE SLOPE.
5. DELETED.
6. DELETED.
7. DELETED.
8. DELETED.
9. DELETED.
10. DELETED.
11. LOCATE 3-WAY VALVES AS CLOSE TO HFP-VSL-00006 AS POSSIBLE.
12. DELETED.
13. DELETED.
14. PLANT WASH USED FOR PUMP PRIMING AND PIPE FLUSH AFTER EACH TRANSFER.
15. DELETED.
16. THE MINIMUM REQUIREMENT FOR RADIOACTIVE SLURRY PIPES/JUMPERS IS QUALITY LEVEL 2 AND SEISMIC CATEGORY III. THE MINIMUM FOR ALL OTHERS IS COMMERCIAL QUALITY AND SEISMIC CATEGORY III EXCEPT FOR THOSE LINES THAT ARE SC-II OVER SC-I. QUALITY LEVEL 1 AND SEISMIC CATEGORY I IS FOR VESSEL ONLY.
17. DEMISTER IS MOUNTED DIRECTLY TO VESSEL NOZZLE. LOCATE DEMISTER IN HIGH POINT OF VESSEL HEAD (AS CLOSE AS POSSIBLE).
18. DELETED.
19. DELETED.
20. OVERFLOW JUMPER TO PROVIDE UNRESTRICTED FLOW DIRECTED TOWARD SUMP. FLAPPER TO MINIMIZE AIR IN-LEAKAGE THROUGH OVERFLOW NOZZLE OPENING.
21. CONTENTS OF THIS DOCUMENT ARE DANGEROUS WASTE PERMIT AFFECTING.
22. THE MINIMUM QUALITY LEVELS AND SEISMIC CATEGORIES OF THE PUMP COMPONENTS ARE AS FOLLOWS: PUMP BODY AND MOTOR ARE COMMERCIAL GRADE (APC) AND SC-II. CONTROLLERS (YC) ARE COMMERCIAL GRADE (APC) AND SC-III.
23. AGITATOR AND SPARGERS ARE SHOWN ON P&ID 24590-HLW-M6-HFP-P20007.
24. DELETED.
25. SLEEVED PIPE IS INDICATED BY TWO DASHED LINES SURROUNDING A PIPELINE. SLOPE SLEEVE INTO CAVE WITH SAME SLOPE AS PIPELINE.
26. DELETED.
27. PIPING IN WALL PENETRATION IS 2" S11B. QUALITY LEVEL 1 AND SEISMIC CATEGORY I.
28. THE PORTIONS OF THIS DRAWING SHOWN IN PHANTOM ARE CONSIDERED NON-PERMIT AFFECTING AND ARE NOT SUBJECT TO THE REGULATORY REQUIREMENTS OF THE WAC CODE FOR THE DANGEROUS WASTE PERMIT TO THE EXTENT THAT THOSE PORTIONS DO NOT IMPACT DANGEROUS WASTE AREAS/OPERATIONS.

HOLD/OPEN ITEMS:

1. DELETED.
2. DELETED.
3. DELETED.
4. DELETED.
5. DELETED
6. DELETED.
7. DELETED.

REFERENCES:

1. 24590-HLW-M5-V17T-P0001, "PROCESS FLOW DIAGRAM HLW RECEIPT & FEED PREPARATION (SYSTEM HCP, GFR, & HFP)".
2. 24590-HLW-3YD-HFP-00001, "SYSTEM DESCRIPTION FOR HLW MELTER FEED (SYSTEM HFP)".

ERIC B. ISSEN — STATE OF WASHINGTON — 33449 — REGISTERED PROFESSIONAL ENGINEER
EXPIRES: 07/28/05

PLEASE NOTE THAT SOURCE, SPECIAL NUCLEAR AND BYPRODUCT MATERIALS, AS DEFINED IN THE ATOMIC ENERGY ACT OF 1954 (AEA), ARE REGULATED AT THE U.S. DEPARTMENT OF ENERGY (DOE) FACILITIES EXCLUSIVELY BY DOE ACTING PURSUANT TO ITS AEA AUTHORITY. DOE ASSERTS, THAT PURSUANT TO THE AEA, IT HAS SOLE AND EXCLUSIVE RESPONSIBILITY AND AUTHORITY TO REGULATE SOURCE, SPECIAL NUCLEAR, AND BYPRODUCT MATERIAL AT DOE-OWNED NUCLEAR FACILITIES. INFORMATION CONTAINED HEREIN ON RADIONUCLIDES IS PROVIDED FOR PROCESS DESCRIPTION PURPOSES ONLY.

Q — QUALITY DESIGNATOR

REV	DESCRIPTION	ORG	CHKD	RVWD	APVD	DATE
1	ISSUED FOR PERMIT USE	SC			TV	5-18-05
0	ISSUED FOR PERMIT USE	JM	SJC	DMY	JFS	5-5-04

REVISION HISTORY

ISSUED BY RPP-WTP PDC

PROJECT No.	24590	
SITE	HANFORD	
AREA	200E	
BUILDING No.	30	

ISSUE STAMP

	BY	DATE
ORIGINATOR	JASON A MEDINA	5/5/04
CHECKER	STEVEN CROSS	5/5/04
APPROVER	JOHN F SCHNEIDER	5/5/04
REVIEWER	D M YARBROUGH	5/5/04

CONTENT APPLICABLE TO ALARA? [X] YES [ ] NO
ADR NO. N/A REV:
SAFETY SCREEN REQUIRED? [ ] YES [X] NO EMS INITIAL IF YES

BECHTEL

RIVER PROTECTION PROJECT
WASTE TREATMENT PLANT
2435 STEVENS CENTER PLACE
RICHLAND, WA 99354

CONTRACT No: DE-AC27-01RV14136

P&ID - HLW MELTER FEED PROCESS SYSTEM MELTER FEED PREPARATION VESSEL HFP-VSL-00005 (MELTER 2)

SCALE: NONE

24590-HLW-M6-HFP-P20001 REV 1

"E" SIZE - 44x34
COMPUTER GENERATED - MANUAL CHANGES NOT PERMITTED

SAFETY SCREEN IS REQUIRED FOR DRAWING TYPES IDENTIFIED IN 24590-WTP-GPP-SREG-002

FORM E_SDN.DGN 02/2003

R10911784

05/18/2005 07:29:17 AM

PLOTTED BY: eeweb
C:\Work\ems05070\HLW\M6\HFP\P20001.dgn

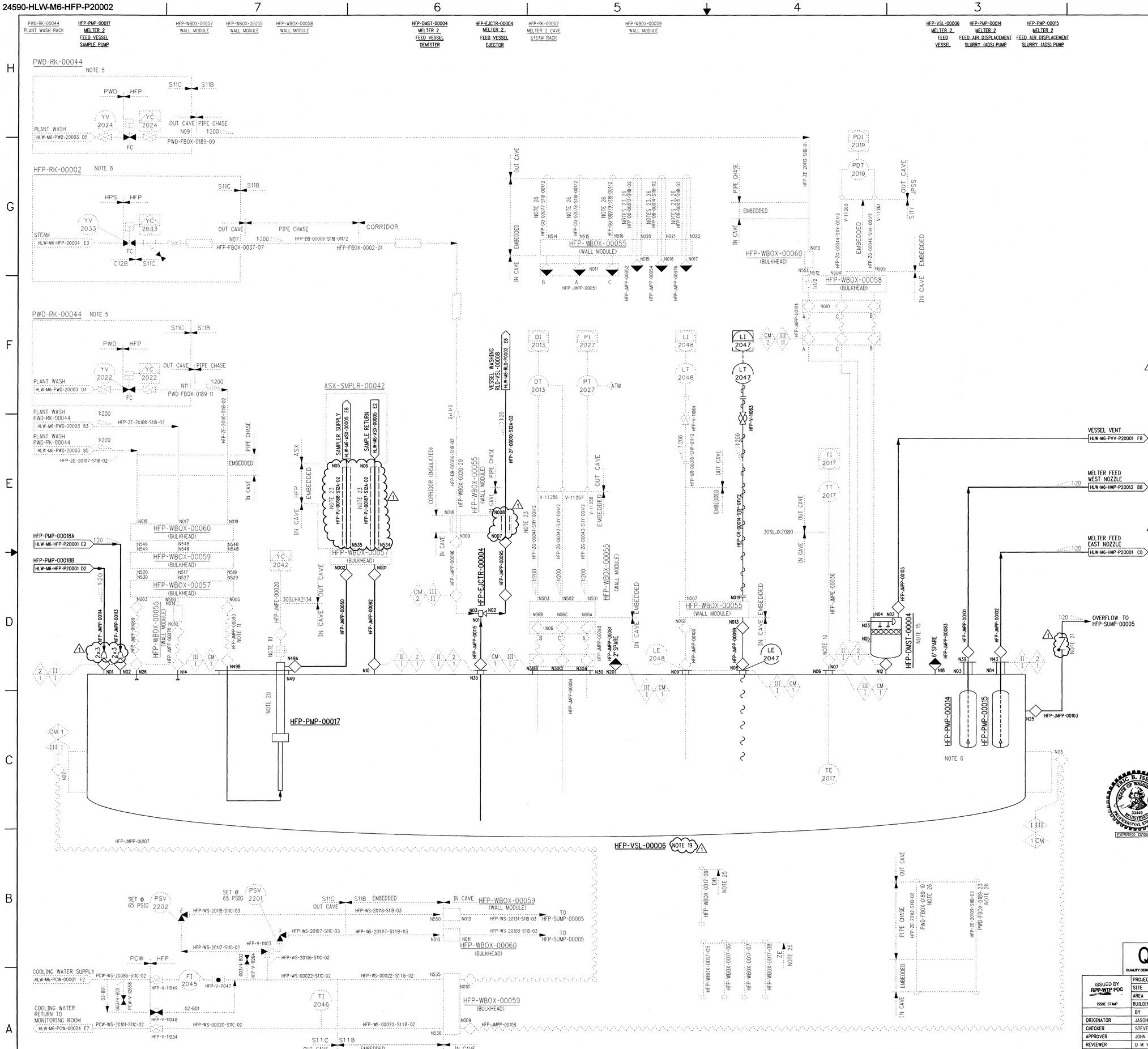

NOTES:

THE FOLLOWING NOTES ARE GENERAL NOTES FOR HFP SYSTEM

1. SEE DRAWINGS 24590-WTP-M6-50-P0001 THROUGH 24590-WTP-M6-50-P0006 FOR GENERAL NOTES, SYMBOLS AND LEGEND.
2. DELETED.
3. DELETED.

THE FOLLOWING NOTES ARE SPECIFIC TO THIS DRAWING

4. DELETED.
5. DELETED.
6. DELETED.
7. DELETED.
8. DELETED.
9. DELETED.
10. DELETED.
11. PLANT WASH USED FOR PUMP PRIMING AND PIPE FLUSH AFTER EACH TRANSFER.
12. DELETED.
13. THE MINIMUM REQUIREMENT FOR PROCESS PIPES/JUMPERS IS QUALITY LEVEL 2 AND SEISMIC CATEGORY II. THE MINIMUM FOR ALL OTHERS IS COMMERCIAL QUALITY AND SEISMIC CATEGORY III EXCEPT FOR THOSE LINES THAT ARE SC-II OVER SC-I. QUALITY LEVEL I AND SEISMIC CATEGORY I IS FOR VESSEL ONLY.
14. DELETED.
15. DEMISTER IS MOUNTED DIRECTLY TO VESSEL NOZZLE. LOCATE DEMISTER ON HIGH POINT OF VESSEL HEAD (AS CLOSE AS POSSIBLE).
16. DELETED.
17. DELETED.
18. CONTENTS OF THIS DOCUMENT ARE DANGEROUS WASTE PERMIT AFFECTING.
19. AGITATOR AND SPARGE LINES ARE SHOWN ON P&ID 24590-HLW-M6-HFP-P20008.
20. THE MINIMUM QUALITY LEVELS AND SEISMIC CATEGORIES OF THE PUMP COMPONENTS ARE AS FOLLOWS:
    - PUMP BODY AND MOTOR ARE COMMERCIAL GRADE (APC) AND SC-II.
    - CONTROLLERS (YC) AND CONNECTIONS ARE COMMERCIAL GRADE (APC) AND SC-III.
21. OVERFLOW JUMPER TO PROVIDE UNRESTRICTED FLOW DIRECTED TOWARD SUMP. FLAPPER TO MINIMIZE AIR IN-LEAKAGE THROUGH OVERFLOW NOZZLE OPENING.
22. DELETED.
23. SLEEVED PIPE IS INDICATED BY TWO DASHED LINES SURROUNDING A PIPELINE. SLOPE SLEEVE INTO CAVE WITH SAME SLOPE AS PIPELINE.
24. DELETED.
25. PIPE IN WALL PENETRATIONS IS 2" S11B, QUALITY LEVEL 1 AND SEISMIC CATEGORY I.
26. THE PORTIONS OF THIS DRAWING SHOWN IN PHANTOM ARE CONSIDERED NON-PERMIT AFFECTING AND ARE NOT SUBJECT TO THE REGULATORY REQUIREMENTS OF THE WAC CODE FOR THE DANGEROUS WASTE PERMIT TO THE EXTENT THAT THOSE PORTIONS DO NOT IMPACT DANGEROUS WASTE AREAS/OPERATIONS.

HOLD/OPEN ITEMS:

1. DELETED.
2. DELETED.
3. DELETED.
4. DELETED.
5. DELETED.
6. DELETED.

REFERENCES:

1. 24590-HLW-M5-V17T-P0001, "PROCESS FLOW DIAGRAM HLW RECEIPT & FEED PREPARATION (SYSTEM HCP, GFR, & HFP)".
2. 24590-HLW-3YD-HFP-00001, "SYSTEM DESCRIPTION FOR HLW MELTER FEED (SYSTEM HFP)".

ERIC B. LEBERMAN — STATE OF WASHINGTON — 33449 — REGISTERED PROFESSIONAL ENGINEER — 5/18/05 — EXPIRES: 07/28/05

PLEASE NOTE THAT SOURCE, SPECIAL NUCLEAR AND BYPRODUCT MATERIALS, AS DEFINED IN THE ATOMIC ENERGY ACT OF 1954 (AEA), ARE REGULATED AT THE U.S. DEPARTMENT OF ENERGY (DOE) FACILITIES EXCLUSIVELY BY DOE ACTING PURSUANT TO ITS AEA AUTHORITY. DOE ASSERTS, THAT PURSUANT TO THE AEA, IT HAS SOLE AND EXCLUSIVE RESPONSIBILITY AND AUTHORITY TO REGULATE SOURCE, SPECIAL NUCLEAR, AND BYPRODUCT MATERIAL AT DOE-OWNED NUCLEAR FACILITIES. INFORMATION CONTAINED HEREIN ON RADIONUCLIDES IS PROVIDED FOR PROCESS DESCRIPTION PURPOSES ONLY.

Q — QUALITY DESIGNATOR

REVISION HISTORY

REV	DESCRIPTION	ORG	CHKD	RVWD	APVD	DATE
1	ISSUED FOR PERMIT USE	SC	RWL	RN		5-18-05
0	ISSUED FOR PERMIT USE	JM	SJC	DMY	JFS	5-5-04

ISSUED BY RPP-WTP PDC — ISSUE STAMP

PROJECT No.	24590	
SITE	HANFORD	
AREA	200E	
BUILDING No.	30	
	BY	DATE
ORIGINATOR	JASON A MEDINA	5/5/04
CHECKER	STEVEN CROSS	5/5/04
APPROVER	JOHN F SCHNEIDER	5/5/04
REVIEWER	D M YARBROUGH	5/5/04

CONTENT APPLICABLE TO ALARA? [X] YES [ ] NO
ADR NO. N/A REV:
SAFETY SCREEN REQUIRED? [ ] YES [X] NO EMS INITIAL IF YES

BECHTEL

RIVER PROTECTION PROJECT
WASTE TREATMENT PLANT
2435 STEVENS CENTER PLACE
RICHLAND, WA 99354

CONTRACT No: DE-AC27-01RV14136

P&ID - HLW
MELTER FEED PROCESS SYSTEM
MELTER FEED VESSEL
HFP-VSL-00006
(MELTER 2)

SCALE: NONE

24590-HLW-M6-HFP-P20002

REV 1

'E' SIZE - 44x34
COMPUTER GENERATED - MANUAL CHANGES NOT PERMITTED

SAFETY SCREEN IS REQUIRED FOR DRAWING TYPES IDENTIFIED IN 24590-WTP-GPP-SREG-002

FORM E_SDN.DGN 02/2003

R10571786

05/18/2005 07:30:00 AM

PLOTTED BY: eewebb
C:\Work\ems05070\HLW\M6\HFP20002r1.dgn

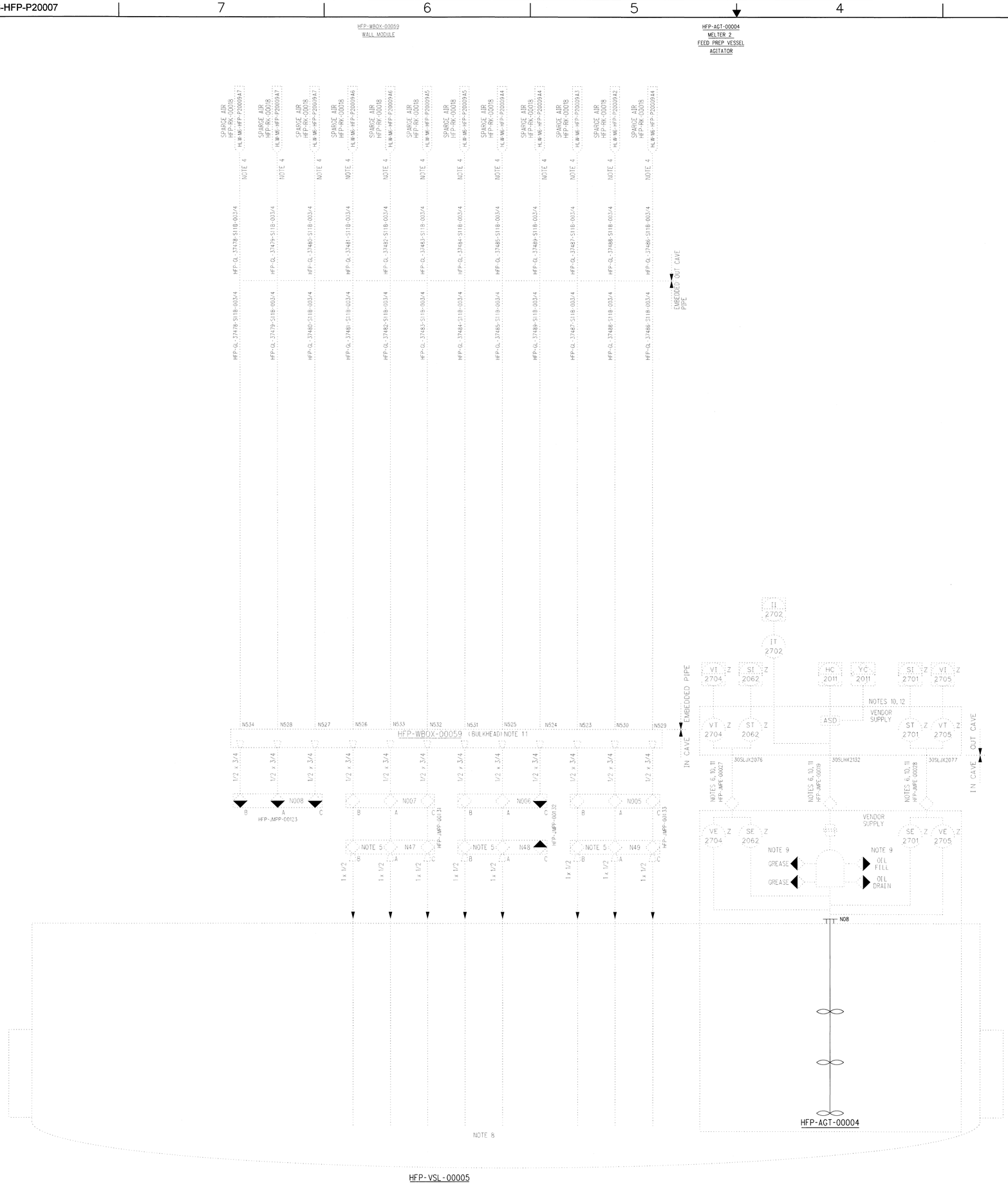

NOTES:

THE FOLLOWING NOTES ARE GENERAL NOTES FOR HFP SYSTEM

1. SEE DRAWINGS 24590-WTP-M6-50-P0001 THROUGH 24590-WTP-M6-50-P0006 FOR GENERAL NOTES, SYMBOLS AND LEGEND.
2. DELETED.
3. DELETED.

THE FOLLOWING NOTES ARE SPECIFIC TO THIS DRAWING

4. THIS LINE IS QUALITY LEVEL 1 AND SEISMIC CATEGORY I.
5. 3-WAY CONNECTOR BLOCK TO BE MOUNTED ON VESSEL BULKHEAD. INDIVIDUAL JUMPER CONNECTION SIZE IS 1/2 INCH. 1 INCH SPARGE PIPING WILL BE CONNECTED TO EACH JUMPER LEG (WITH REDUCER) AND ROUTED BY VESSEL FABRICATOR INTO THE VESSEL.
6. DELETED.
7. CONTENTS OF THIS DOCUMENT ARE DANGEROUS WASTE PERMIT AFFECTING.
8. END OF SPARGERS (8 REQ'D) TO BE LOCATED AT A RADIUS OF 36 INCHES FROM VESSEL CENTER AND 1 INCH OFF VESSEL BOTTOM.
9. OIL FILL AND DRAIN CONNECTORS SHALL BE 3/4" STAUBLI RBE VALVED PLUG WITH INTEGRAL VALVE, DUST CAP, AND FIXING RING. GREASE CONNECTORS SHALL BE 3/8" STAUBLI RBE UNVALVED PLUG WITH DUST CAP AND FIXING RING.
10. THE MINIMUM QUALITY LEVELS AND SEISMIC CATEGORIES OF THE AGITATOR COMPONENTS ARE AS FOLLOWS: AGITATOR BODY, MOTOR JUMPER AND MOTOR ARE COMMERCIAL GRADE (APC) AND SC-II. HAND CONTROLLER (HC AND YC), AND ASD ARE COMMERCIAL GRADE (APC) AND SC-III. ALL OTHER COMPONENTS, INCLUDING THE SPEED SENSORS (SI/ST), VIBRATION SENSORS (VI, VT), AND CONNECTING JUMPERS, ARE QL-2 AND SC-I.
11. JOGGLED PENETRATIONS AND BULKHEAD STRUCTURES INCLUDING INTERNAL PIPING ARE QUALITY LEVEL 1 AND SEISMIC CATEGORY I.
12. LOCATE REDUNDANT VIBRATION/SPEED TRANSMITTERS AND INDICTORS IN SEPARATE FIRE AREAS.
13. THE PORTIONS OF THIS DRAWING SHOWN IN PHANTOM ARE CONSIDERED NON-PERMIT AFFECTING AND ARE NOT SUBJECT TO THE REGULATORY REQUIREMENTS OF THE WAC CODE FOR THE DANGEROUS WASTE PERMIT TO THE EXTENT THAT THOSE PORTIONS DO NOT IMPACT DANGEROUS WASTE AREAS/OPERATIONS.

REFERENCES:

1. 24590-HLW-M5-V17T-P0001, "PROCESS FLOW DIAGRAM, HLW RECEIPT AND FEED PREPARATION (SYSTEMS GFR & HFP)".
2. 24590-HLW-3YD-HFP-00001, "SYSTEM DESCRIPTION FOR HLW MELTER FEED (SYSTEM HFP)".
3. DELETED.

ERIC B. ISERN — STATE OF WASHINGTON — 33449 — REGISTERED PROFESSIONAL ENGINEER — 5/17/05
EXPIRES: 07/28/05

PLEASE NOTE THAT SOURCE, SPECIAL NUCLEAR AND BYPRODUCT MATERIALS, AS DEFINED IN THE ATOMIC ENERGY ACT OF 1954 (AEA), ARE REGULATED AT THE U.S. DEPARTMENT OF ENERGY (DOE) FACILITIES EXCLUSIVELY BY DOE ACTING PURSUANT TO ITS AEA AUTHORITY. DOE ASSERTS, THAT PURSUANT TO THE AEA, IT HAS SOLE AND EXCLUSIVE RESPONSIBILITY AND AUTHORITY TO REGULATE SOURCE, SPECIAL NUCLEAR, AND BYPRODUCT MATERIAL AT DOE-OWNED NUCLEAR FACILITIES. INFORMATION CONTAINED HEREIN ON RADIONUCLIDES IS PROVIDED FOR PROCESS DESCRIPTION PURPOSES ONLY.

Q — QUALITY DESIGNATOR

REV	DESCRIPTION	ORG	CHKD	RVWD	APVD	DATE
0	ISSUED FOR PERMITTING USE	SC	BR	JL	DV	5-17-05

REVISION HISTORY

ISSUED BY RPP-WTP PDC — ISSUE STAMP

PROJECT No.	24590
SITE	HANFORD
AREA	200E
BUILDING No.	30

	BY	DATE
ORIGINATOR	Dave Sipes	5/12/05
CHECKER	Greg Gugelli	5/12/05
APPROVER	[illegible]	5-17-05
REVIEWER	[illegible]	5/16/05

CONTENT APPLICABLE TO ALARA? [X] YES [ ] NO
ADR NO. N/A REV:
SAFETY SCREEN REQUIRED? [ ] YES [X] NO EMS INITIAL IF YES

RIVER PROTECTION PROJECT
WASTE TREATMENT PLANT
2435 STEVENS CENTER PLACE
RICHLAND, WA 99354

CONTRACT No: DE-AC27-01RV14136

P&ID - HLW
MELTER FEED PROCESS SYSTEM
HFP-VSL-00005
AGITATION AND SPARGING

SCALE: NONE
24590-HLW-M6-HFP-P20007
REV 0

SAFETY SCREEN IS REQUIRED FOR DRAWING TYPES IDENTIFIED IN 24590-WTP-GPP-SREG-002

"E" SIZE - 44x34
COMPUTER GENERATED - MANUAL CHANGES NOT PERMITTED

R10571788

05/11/2005 03:51:20 PM
PLOTTED BY: wmahoney
C:\Work\dms0507\HLW\HFP\20007-0.dgn

FORM E_SDN.DGN 02/2003

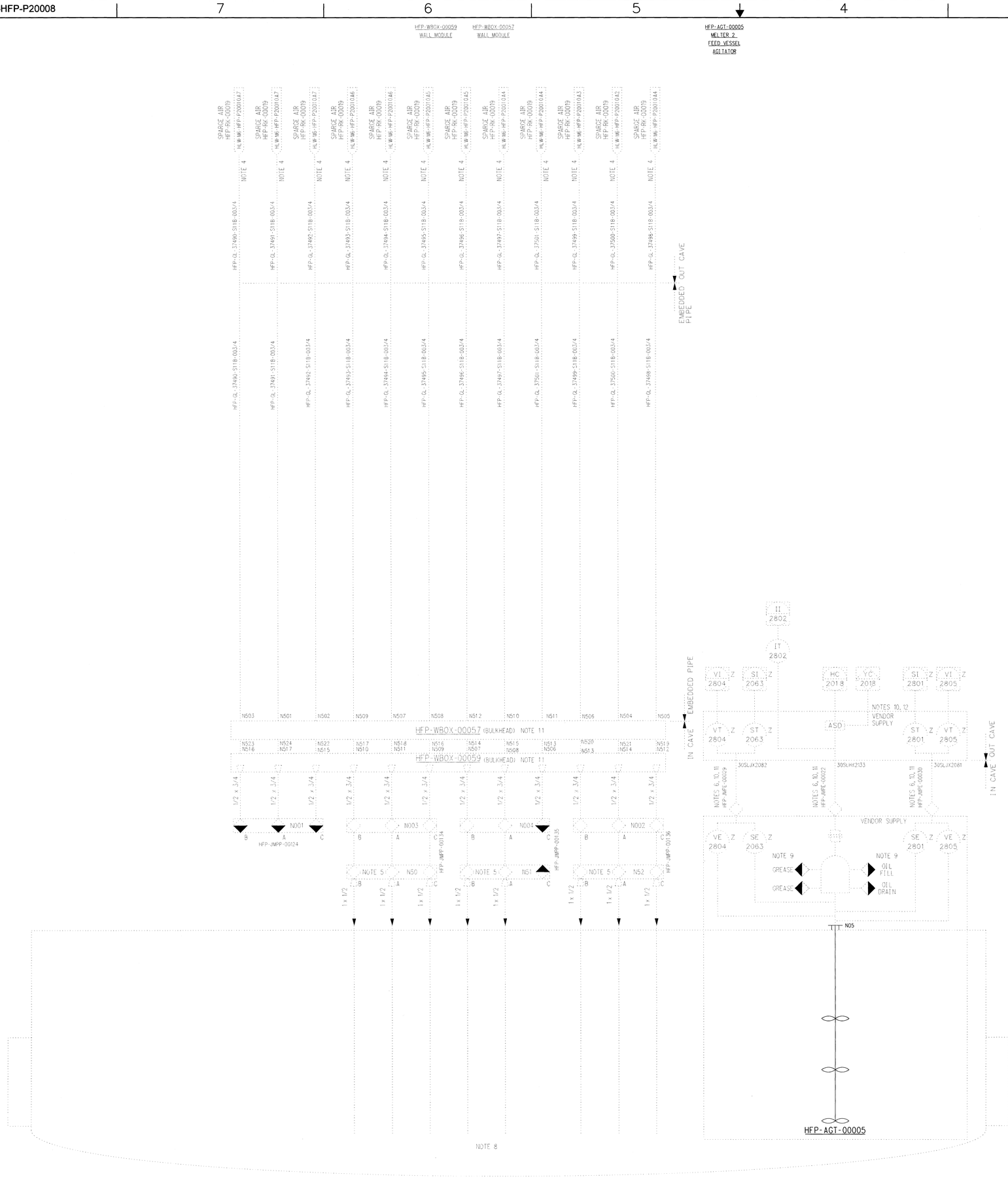

NOTES:

THE FOLLOWING NOTES ARE GENERAL NOTES FOR HFP SYSTEM

1. SEE DRAWINGS 24590-WTP-M6-50-P0001 THROUGH 24590-WTP-M6-50-P0006 FOR GENERAL NOTES, SYMBOLS AND LEGEND.
2. DELETED.
3. DELETED.

THE FOLLOWING NOTES ARE SPECIFIC TO THIS DRAWING

4. THIS LINE IS QUALITY LEVEL 1 AND SEISMIC CATEGORY I.
5. 3-WAY CONNECTOR BLOCK TO BE MOUNTED ON VESSEL BULKHEAD. INDIVIDUAL JUMPER CONNECTION SIZE IS 1/2 INCH. 1 INCH SPARGE PIPING WILL BE CONNECTED TO EACH JUMPER LEG (WITH REDUCER) AND ROUTED BY VESSEL FABRICATOR INTO VESSEL.
6. DELETED.
7. CONTENTS OF THIS DOCUMENT ARE DANGEROUS WASTE PERMIT AFFECTING.
8. END OF SPARGERS (8 REQ'D) TO BE LOCATED AT A RADIUS OF 36 INCHES FROM VESSEL CENTER AND 1 INCH OFF VESSEL BOTTOM.
9. OIL FILL AND DRAIN CONNECTORS SHALL BE 3/4" STAUBLI RBE VALVED PLUG WITH INTEGRAL VALVE, DUST CAP, AND FIXING RING. GREASE CONNECTORS SHALL BE 3/8" STAUBLI RBE UNVALVED PLUG WITH DUST CAP AND FIXING RING.
10. THE MINIMUM QUALITY LEVELS AND SEISMIC CATEGORIES OF THE AGITATOR COMPONENTS ARE AS FOLLOWS: AGITATOR BODY, MOTOR JUMPER AND MOTOR ARE COMMERCIAL GRADE (APC) AND SC-II. HAND CONTROLLER (HC AND YC), AND ASD ARE COMMERCIAL GRADE (APC) AND SC-III. ALL OTHER COMPONENTS, INCLUDING THE SPEED SENSORS (SI/ST), VIBRATION SENSORS (VI, VT), AND CONNECTING JUMPERS ARE QL-2 AND SC-I.
11. JOGGLED PENETRATIONS AND BULKHEAD STRUCTURES INCLUDING INTERNAL PIPING ARE QUALITY LEVEL 1 AND SEISMIC CATEGORY I.
12. LOCATE REDUNDANT VIBRATION SPEED/TRANSMITTERS AND INDICTORS IN SEPARATE FIRE AREAS.
13. THE PORTIONS OF THIS DRAWING SHOWN IN PHANTOM ARE CONSIDERED NON-PERMIT AFFECTING AND ARE NOT SUBJECT TO THE REGULATORY REQUIREMENTS OF THE WAC CODE FOR THE DANGEROUS WASTE PERMIT TO THE EXTENT THAT THOSE PORTIONS DO NOT IMPACT DANGEROUS WASTE AREAS/OPERATIONS.

REFERENCES:

1. 24590-HLW-M5-V17T-P0001, "PROCESS FLOW DIAGRAM, HLW RECEIPT AND FEED PREPARATION (SYSTEM GFR & HFP)".
2. 24590-HLW-3YD-HFP-00001, "SYSTEM DESCRIPTION FOR HLW MELTER FEED (SYSTEM HFP)".
3. DELETED.

ERIC B. ISBELL — STATE OF WASHINGTON — 33449 — REGISTERED PROFESSIONAL ENGINEER — 5/17/05 — EXPIRES: 07/28/05

PLEASE NOTE THAT SOURCE, SPECIAL NUCLEAR AND BYPRODUCT MATERIALS, AS DEFINED IN THE ATOMIC ENERGY ACT OF 1954 (AEA), ARE REGULATED AT THE U.S. DEPARTMENT OF ENERGY (DOE) FACILITIES EXCLUSIVELY BY DOE ACTING PURSUANT TO ITS AEA AUTHORITY. DOE ASSERTS, THAT PURSUANT TO THE AEA, IT HAS SOLE AND EXCLUSIVE RESPONSIBILITY AND AUTHORITY TO REGULATE SOURCE, SPECIAL NUCLEAR, AND BYPRODUCT MATERIAL AT DOE-OWNED NUCLEAR FACILITIES. INFORMATION CONTAINED HEREIN ON RADIONUCLIDES IS PROVIDED FOR PROCESS DESCRIPTION PURPOSES ONLY.

Q — QUALITY DESIGNATOR

REVISION HISTORY

REV	DESCRIPTION	ORG	CHKD	RVWD	APVD	DATE
0	ISSUED FOR PERMITTING USE	SE	BBL		TV	5-17-05

ISSUED BY: RPP-WTP PDC — ISSUE STAMP

PROJECT No.	24590
SITE	HANFORD
AREA	200E
BUILDING No.	30

RIVER PROTECTION PROJECT
WASTE TREATMENT PLANT
2435 STEVENS CENTER PLACE
RICHLAND, WA 99354

CONTRACT No: DE-AC27-01RV14136

	BY	DATE
ORIGINATOR	Shawn Cross	5/16/05
CHECKER	Roger Russell	5/12/05
APPROVER		5/17/05
REVIEWER		5/16/05

CONTENT APPLICABLE TO ALARA? [X] YES [ ] NO
ADR NO. N/A REV:
SAFETY SCREEN REQUIRED? [ ] YES [X] NO E&NS INITIAL IF YES

P&ID - HLW MELTER FEED PROCESS SYSTEM HFP-VSL-00006 AGITATION AND SPARGING

SCALE: NONE

24590-HLW-M6-HFP-P20008

REV 0

SAFETY SCREEN IS REQUIRED FOR DRAWING TYPES IDENTIFIED IN 24590-WTP-GPP-SREG-002

E-SIZE - 44x34
COMPUTER GENERATED - MANUAL CHANGES NOT PERMITTED

R10571789

05/11/2005 03:53:29 PM

PLOTTED BY: smccartney
P:\24590-Group2\TOL\M6\HFP\20008-0.dgn

FORM E_SDN.DGN 02/2003

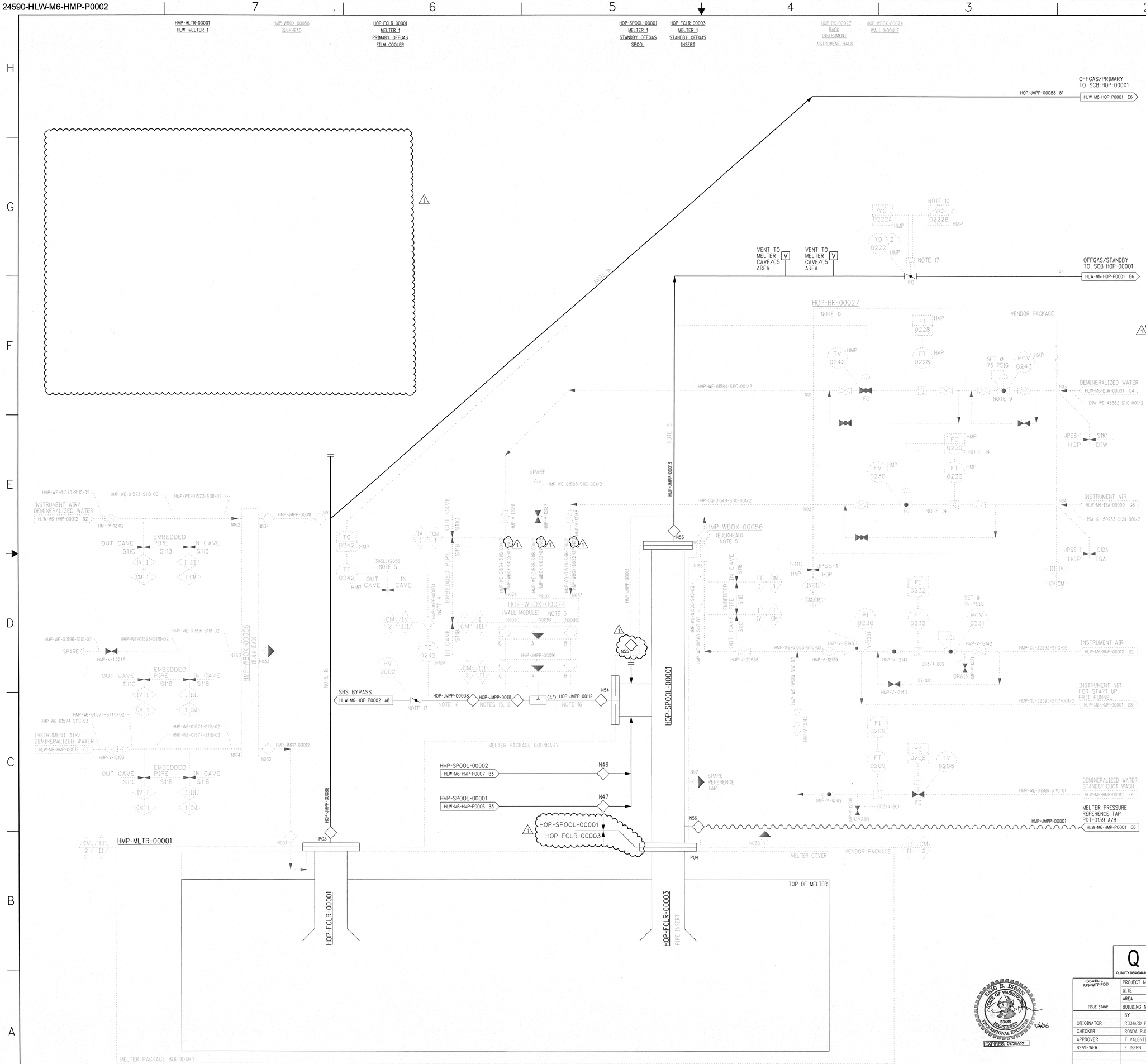

NOTES:

THE FOLLOWING NOTES ARE GENERAL NOTES FOR HMP SYSTEM.

1. SEE DRAWINGS 24590-WTP-M6-50-P0001 THROUGH 24590-WTP-M6-50-P0006 FOR GENERAL NOTES, SYMBOLS AND LEGEND.
2. JPSS-1 SPECIFICATION IS DEFINED IN INSTRUMENT PIPING MATERIAL CLASS SPEC NO. 24590-WTP-3PS-JXF0-T0001. SPECIFICATION CHANGE ALSO DEFINES AREA OF RESPONSIBILITY.
3. LOCATE OUT CAVE ISOLATION VALVES AS CLOSE AS POSSIBLE TO IN CAVE-OUT CAVE BOUNDARY.
4. PROCESS JUMPERS ARE COMMERCIAL QUALITY AND SEISMIC CATEGORY III EXCEPT AS INDICATED.
5. JOGGLED PENETRATIONS AND WALL MODULES INCLUDING INTERNAL PIPING ARE QUALITY LEVEL 1 AND SEISMIC CATEGORY I. BULKHEAD STRUCTURES ARE QUALITY LEVEL 2 AND SEISMIC CATEGORY II. SERVICE PIPING WITHIN THE BULKHEAD IS COMMERCIAL GRADE AND SEISMIC CATEGORY III.
6. THE REQUIRED BATCH SEQUENCES, PERMISSIVES, INTERLOCKS, ALARMS AND OPERATOR INTERFACE POINTS FOR THE HMP SYSTEM ARE DESCRIBED IN THE SOFTWARE FUNCTIONAL SPECIFICATION 24590-HLW-3PS-HMP-T0001.
7. FOR ITS PERMISSIVES AND INTERLOCKS, REFER TO SAFETY SYSTEM REQUIREMENT SPECIFICATIONS 24590-HLW-3PS-PPJ-T0008 AND 24590-HLW-3PS-PPJ-T0009 (TO BE ISSUED).
8. FOR ELECTRICAL JUMPERS, REFER TO SYSTEM BLOCK DIAGRAMS 24590-HLW-J1-HMP-00001 THROUGH 00010.

THE FOLLOWING NOTES ARE SPECIFIC TO THIS DRAWING.

9. RACK MOUNTED PRESSURE REGULATOR (PCV) PROVIDED WITH AN INTEGRAL PRESSURE INDICATOR.
10. PLANT PROTECTION SYSTEM (PPS) INTERLOCK WITH HIGH MELTER PLENUM PRESSURE, 24590-HLW-M6-HMP-00012.
11. DELETED
12. THE REQUIRED BATCH SEQUENCES, PERMISSIVES, INTERLOCKS, ALARM AND OPERATOR INTERFACE POINTS FOR THE HOP SYSTEM ARE DESCRIBED IN THE SOFTWARE FUNCTIONAL SPECIFICATION 24590-HLW-3PS-HOP-T0001.
13. LOCATE TO ALLOW NUT RUNNER OPERATION VIA OVERHEAD CRANE. BUTTERFLY VALVE TO BE BUBBLE TIGHT.
14. AIR SUPPLY IS RATIO CONTROLLED TO WATER SUPPLY.
15. HOP-JMPP-00111 IS AN AIR COOLING CHAMBER AND REQUIRES MINIMUM VOLUME OF 7 CUBIC FEET.
16. OFFGAS JUMPERS ARE QUALITY LEVEL 2 AND SEISMIC CATEGORY III.
17. PNEUMATIC ACTUATOR IS IN CAVE. REFER TO P&ID 24590-HLW-M6-ISA-00008 FOR PNEUMATIC LINE WALL PENETRATION DETAILS.
18. DELETED.
19. CONTENTS OF THIS DOCUMENT ARE DANGEROUS WASTE PERMIT AFFECTING.
20. THE PORTIONS OF THIS DRAWING SHOWN IN PHANTOM ARE CONSIDERED NON-PERMIT AFFECTING AND ARE NOT SUBJECT TO THE REGULATORY REQUIREMENTS OF THE WAC CODE FOR THE DANGEROUS WASTE PERMIT TO THE EXTENT THAT THOSE PORTIONS DO NOT IMPACT DANGEROUS WASTE AREAS/OPERATIONS.
21. REVISION 1 CHANGES INCLUDE RENUMBERING JOGGLE NOZZLES. DELETED JUMPERS AND ASSOCIATED VALVES AND LINES, CHANGES TO BOLDING. DELETED NOTE 11.

REFERENCES:

1. DURATEK DRAWING NO. WTP-P-24009 OR PROJECT DWG NO. 24590-101-TSA-W000-0010-07-11.
2. PFD DRAWING 24590-HLW-M5-V17T-P0002, "HLW VITRIFICATION MELTER 1 (HMP SYSTEM)".
3. P&ID NUMBER 24590-HLW-M6-HOP-P0001, "MELTER 1 PRIMARY OFFGAS SCRUBBER (Q)".

PLEASE NOTE THAT SOURCE, SPECIAL NUCLEAR AND BYPRODUCT MATERIALS, AS DEFINED IN THE ATOMIC ENERGY ACT OF 1954 (AEA), ARE REGULATED AT THE U.S. DEPARTMENT OF ENERGY (DOE) FACILITIES EXCLUSIVELY BY DOE ACTING PURSUANT TO ITS AEA AUTHORITY. DOE ASSERTS, THAT PURSUANT TO THE AEA, IT HAS SOLE AND EXCLUSIVE RESPONSIBILITY AND AUTHORITY TO REGULATE SOURCE, SPECIAL NUCLEAR, AND BYPRODUCT MATERIAL AT DOE-OWNED NUCLEAR FACILITIES. INFORMATION CONTAINED HEREIN ON RADIONUCLIDES IS PROVIDED FOR PROCESS DESCRIPTION PURPOSES ONLY.

REV	DESCRIPTION	ORG	CHKD	RVWD	APVD	DATE
1	REVISED PER NOTE 21	RDP	MK	SP	TV	5-2-06
0	ISSUED FOR PERMITTING USE	JR	RR	EI	TV	4/11/05

REVISION HISTORY

Q
QUALITY DESIGNATOR

ISSUED: RPP-WTP PDC
ISSUE STAMP

PROJECT No.	24590
SITE	HANFORD
AREA	200E
BUILDING No.	30

	BY	DATE
ORIGINATOR	RICHARD PETERS	4/11/05
CHECKER	RONDA RUSSELL	4/11/05
APPROVER	T VALENTINO	4/11/05
REVIEWER	E ISERN	4/11/05

CONTENT APPLICABLE TO ALARA? [X] YES [ ] NO
ADR NO. NA REV:
SAFETY SCREEN REQUIRED? [ ] YES [X] NO EMAS INITIAL IF YES ____

ERIC B. ISERN, STATE OF WASHINGTON, 33449, REGISTERED PROFESSIONAL ENGINEER, 5/4/06, EXPIRES: 07/28/07

BECHTEL

RIVER PROTECTION PROJECT
WASTE TREATMENT PLANT
2435 STEVENS CENTER PLACE
RICHLAND, WA 99354

CONTRACT No: DE-AC27-01RV14136

P&ID - HLW MELTER 1 SYSTEM FILM COOLER AND OFFGAS CONNECTION

SCALE: NONE

24590-HLW-M6-HMP-P0002

REV 1

FORM E_SDN.DGN 02/2003

SAFETY SCREEN IS REQUIRED FOR DRAWING TYPES IDENTIFIED IN 24590-WTP-GPP-SREG-002

'E' SIZE - 44x34
COMPUTER GENERATED - MANUAL CHANGES NOT PERMITTED

R10674450

05/01/2006 03:59:15 PM

PLOTTED BY: erwebb
C:\Work\dms05070\HLW\M6\HMP\P0002.dgn

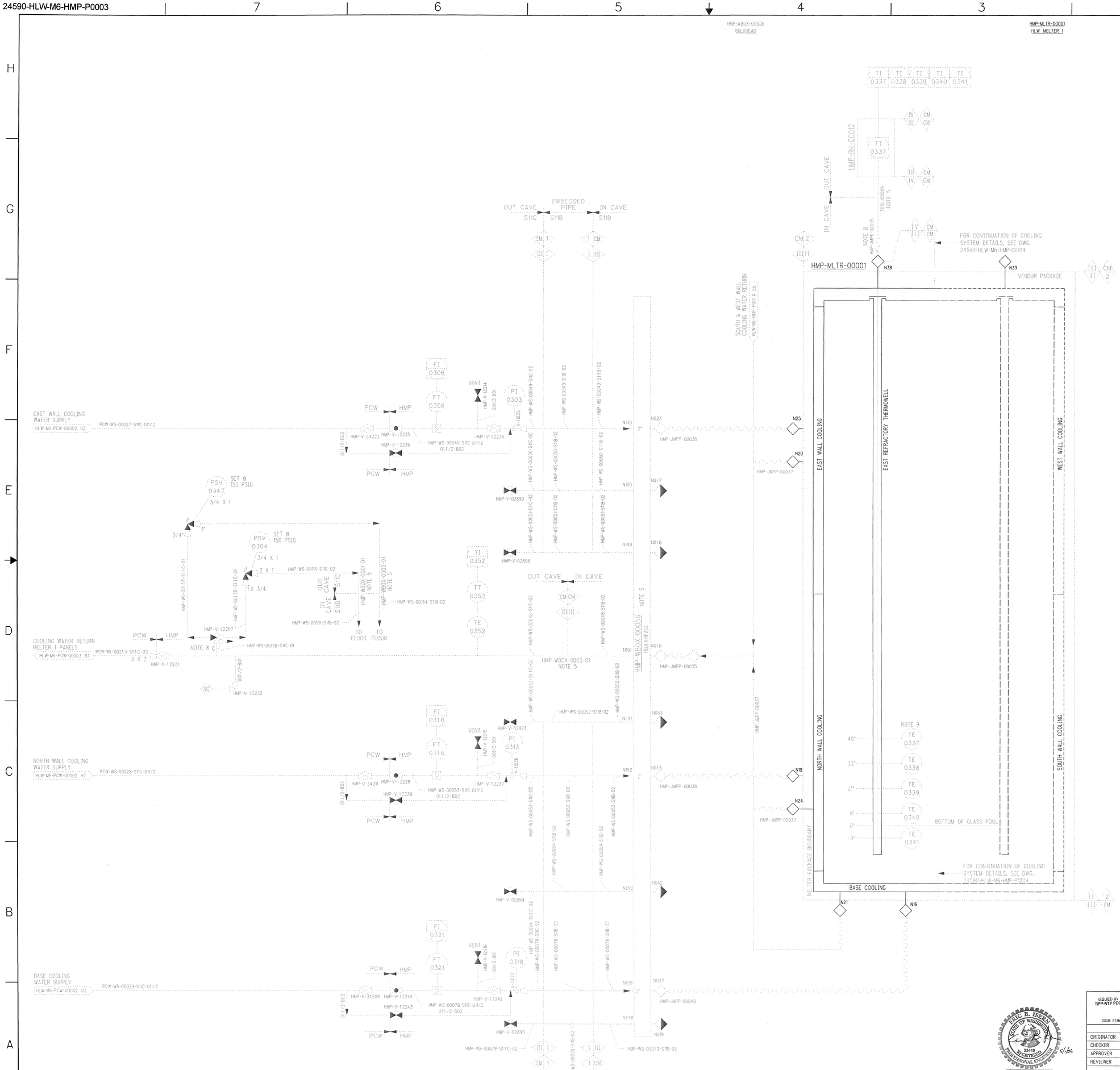

NOTES:

THE FOLLOWING NOTES ARE GENERAL NOTES FOR HMP SYSTEM.

1. SEE DRAWINGS 24590-WTP-M6-50-P0001 THROUGH 24590-WTP-M6-50-P0006 FOR GENERAL NOTES, SYMBOLS AND LEGEND.
2. JPSS-1 SPECIFICATION IS DEFINED IN INSTRUMENT PIPING MATERIAL CLASS SPEC NO. 24590-WTP-3PS-JXF0-T0001. SPECIFICATION CHANGE ALSO DEFINES AREA OF RESPONSIBILITY.
3. LOCATE OUT CAVE ISOLATION VALVES AS CLOSE AS POSSIBLE TO IN CAVE-OUT CAVE BOUNDARY.
4. PROCESS JUMPERS ARE COMMERCIAL QUALITY AND SEISMIC CATEGORY III EXCEPT AS INDICATED.
5. JOGGLED PENETRATIONS AND WALL MODULES INCLUDING INTERNAL PIPING ARE QUALITY LEVEL 1 AND SEISMIC CATEGORY I. BULKHEAD STRUCTURES ARE QUALITY LEVEL 2 AND SEISMIC CATEGORY II. SERVICE PIPING WITHIN THE BULKHEAD IS COMMERCIAL GRADE AND SEISMIC CATEGORY III.
6. THE REQUIRED BATCH SEQUENCES, PERMISSIVES, INTERLOCKS, ALARMS AND OPERATOR INTERFACE POINTS FOR THE HMP SYSTEM ARE DESCRIBED IN THE SOFTWARE FUNCTIONAL SPECIFICATION 24590-HLW-3PS-HMP-T0001.
7. FOR ITS PERMISSIVES AND INTERLOCKS, REFER TO SAFETY SYSTEM REQUIREMENT SPECIFICATIONS 24590-HLW-3PS-PPJ-T0008 AND 24590-HLW-3PS-PPJ-T0009 (TO BE ISSUED).
8. FOR ELECTRICAL JUMPERS, REFER TO SYSTEM BLOCK DIAGRAMS 24590-HLW-J1-HMP-00001 THROUGH 00010.

THE FOLLOWING NOTES ARE SPECIFIC TO THIS DRAWING.

9. REFRACTORY THERMOCOUPLE LOCATIONS RELATIVE TO BOTTOM OF GLASS POOL.
10. DELETED.
11. CONTENTS OF THIS DOCUMENT ARE DANGEROUS WASTE PERMIT AFFECTING.
12. THE PORTIONS OF THIS DRAWING SHOWN IN PHANTOM ARE CONSIDERED NON-PERMIT AFFECTING AND ARE NOT SUBJECT TO THE REGULATORY REQUIREMENTS OF THE WAC CODE FOR THE DANGEROUS WASTE PERMIT TO THE EXTENT THAT THOSE PORTIONS DO NOT IMPACT DANGEROUS AREA/OPERATIONS.

REFERENCES:

1. DURATEK DRAWING NO. WTP-P-24004 SHEETS 1 AND 2, AND NO. WTP-P-22401. PROJECT DRAWING NUMBERS 24590-101-TSA-W000-0010-07-08 & 24590-101-TSA-W000-0010-07-03
2. PFD DRAWING 24590-HLW-M5-V17T-P0002, "HLW VITRIFICATION MELTER 1 (HMP SYSTEM)".

PLEASE NOTE THAT SOURCE, SPECIAL NUCLEAR AND BYPRODUCT MATERIALS, AS DEFINED IN THE ATOMIC ENERGY ACT OF 1954 (AEA), ARE REGULATED AT THE U.S. DEPARTMENT OF ENERGY (DOE) FACILITIES EXCLUSIVELY BY DOE ACTING PURSUANT TO ITS AEA AUTHORITY. DOE ASSERTS, THAT PURSUANT TO THE AEA, IT HAS SOLE AND EXCLUSIVE RESPONSIBILITY AND AUTHORITY TO REGULATE SOURCE, SPECIAL NUCLEAR, AND BYPRODUCT MATERIAL AT DOE-OWNED NUCLEAR FACILITIES. INFORMATION CONTAINED HEREIN ON RADIONUCLIDES IS PROVIDED FOR PROCESS DESCRIPTION PURPOSES ONLY.

Q
QUALITY DESIGNATOR

REV	DESCRIPTION	ORG	CHKD	RVWD	APVD	DATE
0	ISSUED FOR PERMITTING USE	RPP	WRK	JS	RVW	5/1/06

REVISION HISTORY

ISSUED BY RPP-WTP PDC

ISSUE STAMP

PROJECT No.	24590	
SITE	HANFORD	
AREA	200E	
BUILDING No.	30	
	BY	DATE
ORIGINATOR	Richard Peters	5-1-06
CHECKER	[illegible]	5/1/06
APPROVER	[illegible]	5/1/06
REVIEWER	[illegible]	5-1-06

CONTENT APPLICABLE TO ALARA? [X] YES [ ] NO
ADR NO. NA REV:
SAFETY SCREEN REQUIRED? [ ] YES [X] NO EMS INITIAL IF YES

ERIC B. ISEEN, STATE OF WASHINGTON, 33449, REGISTERED PROFESSIONAL ENGINEER, 5/1/06
EXPIRES: 01/26/2007

RIVER PROTECTION PROJECT
WASTE TREATMENT PLANT
2435 STEVENS CENTER PLACE
RICHLAND, WA 99354

CONTRACT No: DE-AC27-01RV14136

P&ID - HLW MELTER PROCESS SYSTEM HLW MELTER 1 COOLING SYSTEM

SCALE: NONE

24590-HLW-M6-HMP-P0003

REV 0

R10674451

04/28/2006 02:44:35 PM

PLOTTED BY: ewerch
C:\Work\Group2\0\24590-HLW\M6\HMP\P0003.dgn

FORM E_SDN.DGN 02/2003

SAFETY SCREEN IS REQUIRED FOR DRAWING TYPES IDENTIFIED IN 24590-WTP-GPP-SREQ-002

'E' SIZE - 44x34
COMPUTER GENERATED - MANUAL CHANGES NOT PERMITTED

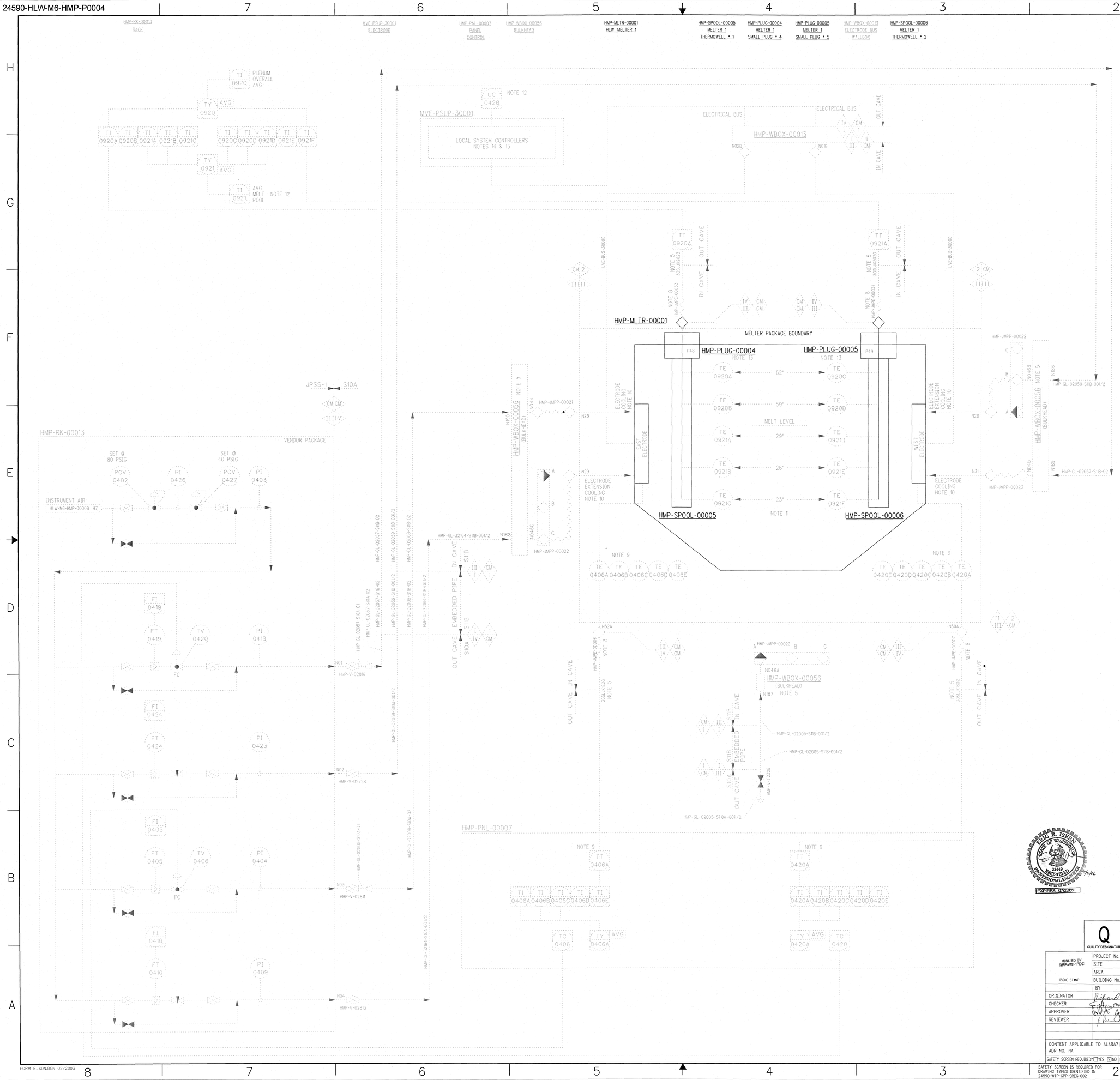

NOTES:

THE FOLLOWING NOTES ARE GENERAL NOTES FOR HMP SYSTEM.

1. SEE DRAWINGS 24590-WTP-M6-50-P0001 THROUGH 24590-WTP-M6-50-P0006 FOR GENERAL NOTES, SYMBOLS AND LEGEND.
2. JPSS-1 SPECIFICATION IS DEFINED IN INSTRUMENT PIPING MATERIAL CLASS SPEC NO. 24590-WTP-3PS-JXF0-T0001. SPECIFICATION CHANGE ALSO DEFINES AREA OF RESPONSIBILITY.
3. LOCATE OUT CAVE ISOLATION VALVES AS CLOSE AS POSSIBLE TO IN CAVE-OUT CAVE BOUNDARY.
4. PROCESS JUMPERS ARE COMMERCIAL QUALITY AND SEISMIC CATEGORY III EXCEPT AS INDICATED.
5. JOGGLED PENETRATIONS AND WALL MODULES INCLUDING INTERNAL PIPING ARE QUALITY LEVEL 1 AND SEISMIC CATEGORY I. BULKHEAD STRUCTURES ARE QUALITY LEVEL 2 AND SEISMIC CATEGORY II. SERVICE PIPING WITHIN THE BULKHEAD IS COMMERCIAL GRADE AND SEISMIC CATEGORY III.
6. THE REQUIRED BATCH SEQUENCES, PERMISSIVES, INTERLOCKS, ALARMS AND OPERATOR INTERFACE POINTS FOR THE HMP SYSTEM ARE FULLY DESCRIBED IN THE SOFTWARE FUNCTIONAL SPECIFICATION 24590-HLW-3PS-HMP-T0001.
7. FOR ITS PERMISSIVES AND INTERLOCKS, REFER TO SAFETY SYSTEM REQUIREMENT SPECIFICATIONS 24590-HLW-3PS-PPJ-T0008 AND 24590-HLW-3PS-PPJ-T0009 (TO BE ISSUED).
8. FOR ELECTRICAL JUMPERS, REFER TO SYSTEM BLOCK DIAGRAMS 24590-HLW-J1-HMP-00001 THROUGH 00010.

THE FOLLOWING NOTES ARE SPECIFIC TO THIS DRAWING.

9. FIVE POINT THERMOCOUPLE ASSEMBLY, AVERAGE OF THREE POINTS IS USED FOR ELECTRODE TEMPERATURE CONTROL INPUT. TWO POINTS ARE USED FOR ELECTRODE AND EXTENSION EXHAUST TEMPERATURE ALARM AT HIGH AND LOW TEMPERATURE.
10. COOLING AIR FOR ELECTRODE AND ELECTRODE EXTENSION EXHAUSTS TO CAVE.
11. DISTANCE OF TEMPERATURE ELEMENTS FROM BOTTOM OF MELT POOL.
12. POWER SUPPLY OPERATION IS INITIATED AND OPERATIONAL STATUS IS MONITORED FROM THE FACILITY CONTROL SYSTEM. JOULE HEATER POWER SUPPLY CONTROL SIGNAL ORIGINATES FROM MELTER AVERAGE GLASS POOL TEMPERATURE. JOULE HEATER POWER SUPPLY OUTPUT VOLTAGE, CURRENT, POWER AND FAULT DIAGNOSTICS ARE MONITORED BY THE CONTROL SYSTEM.
13. PLUGS ARE ALTERNATE INSERTS FOR MELTER PORTS.
14. POWER SUPPLY UNIT CONTROLS INCLUDED IN CONTROL DESCRIPTION 24590-CM-HC4-EBB0-00001-04-00037. POWER SUPPLY MAY BE OPERATED IN "LOCAL" OR "REMOTE" MODE. WHEN IN "LOCAL" MODE, LOSS OF SIGNAL TO POWER SUPPLY FROM FACILITY CONTROL SYSTEM RESULTS IN DEFAULT TO LOCAL SET POINT. WHEN IN "REMOTE" MODE, LOSS OF SIGNAL TO POWER SUPPLY FROM FACILITY CONTROL SYSTEM RESULTS IN DEFAULT TO LAST OUTPUT.
15. FOR POWER SUPPLY SINGLE LINE DIAGRAM REFERENCE DWG. 24590-HLW-E1-LVE-10001.
16. DELETED.
17. CONTENTS OF THIS DOCUMENT ARE DANGEROUS WASTE PERMIT AFFECTING.
18. THE PORTIONS OF THIS DRAWING SHOWN IN PHANTOM ARE CONSIDERED NON-PERMIT AFFECTING AND ARE NOT SUBJECT TO THE REQUIREMENTS OF THE WAC CODE FOR THE DANGEROUS WASTE PERMIT TO THE EXTENT THAT THOSE PORTIONS DO NOT IMPACT DANGEROUS AREAS/OPERATIONS.

REFERENCES:

1. DURATEK DRAWING NO. WTP-P-24008, PROJECT DRAWING NO. 24590-101-TSA-W000-0010-07-10.
2. PFD DRAWING 24590-HLW-M5-V17T-P0002, "HLW VITRIFICATION MELTER 1 (SYSTEM HMP)".

PLEASE NOTE THAT SOURCE, SPECIAL NUCLEAR AND BYPRODUCT MATERIALS, AS DEFINED IN THE ATOMIC ENERGY ACT OF 1954 (AEA), ARE REGULATED AT THE U.S. DEPARTMENT OF ENERGY (DOE) FACILITIES EXCLUSIVELY BY DOE ACTING PURSUANT TO ITS AEA AUTHORITY. DOE ASSERTS, THAT PURSUANT TO THE AEA, IT HAS SOLE AND EXCLUSIVE RESPONSIBILITY AND AUTHORITY TO REGULATE SOURCE, SPECIAL NUCLEAR, AND BYPRODUCT MATERIAL AT DOE-OWNED NUCLEAR FACILITIES. INFORMATION CONTAINED HEREIN ON RADIONUCLIDES IS PROVIDED FOR PROCESS DESCRIPTION PURPOSES ONLY.

ERIC B. ISELLEN — STATE OF WASHINGTON — 33449 — REGISTERED PROFESSIONAL ENGINEER — EXPIRES: 07/23/07

Q — QUALITY DESIGNATOR

REVISION HISTORY

REV	DESCRIPTION	ORG	CHKD	RVWD	APVD	DATE
0	ISSUED FOR PERMITTING USE	RDP		JP		5/2/06

ISSUED BY: RPP-WTP PDC

PROJECT No.	24590
SITE	HANFORD
AREA	200E
BUILDING No.	30

ISSUE STAMP

	BY	DATE
ORIGINATOR	Richard Peterson	5-2-06
CHECKER	John Foster	5/2/06
APPROVER		5/2/06
REVIEWER		5/2/06

CONTENT APPLICABLE TO ALARA? [X] YES [ ] NO
ADR NO. NA REV:
SAFETY SCREEN REQUIRED? [ ] YES [X] NO E&MS INITIAL IF YES

BECHTEL

RIVER PROTECTION PROJECT
WASTE TREATMENT PLANT
2435 STEVENS CENTER PLACE
RICHLAND, WA 99354

CONTRACT No: DE-AC27-01RV14136

P&ID - HLW MELTER 1 ELECTRODE AIR COOLING AND JOULE HEATING

SCALE: NONE

24590-HLW-M6-HMP-P0004

REV 0

FORM E_SDN.DGN 02/2003

SAFETY SCREEN IS REQUIRED FOR DRAWING TYPES IDENTIFIED IN 24590-WTP-GPP-SREG-002

'E' SIZE - 44x34
COMPUTER GENERATED - MANUAL CHANGES NOT PERMITTED

R10674452

05/02/2006 11:29:31 AM

PLOTTED BY: eewebb
C:\Work\dms05070\HLW\M6\HMPP0004.dgn

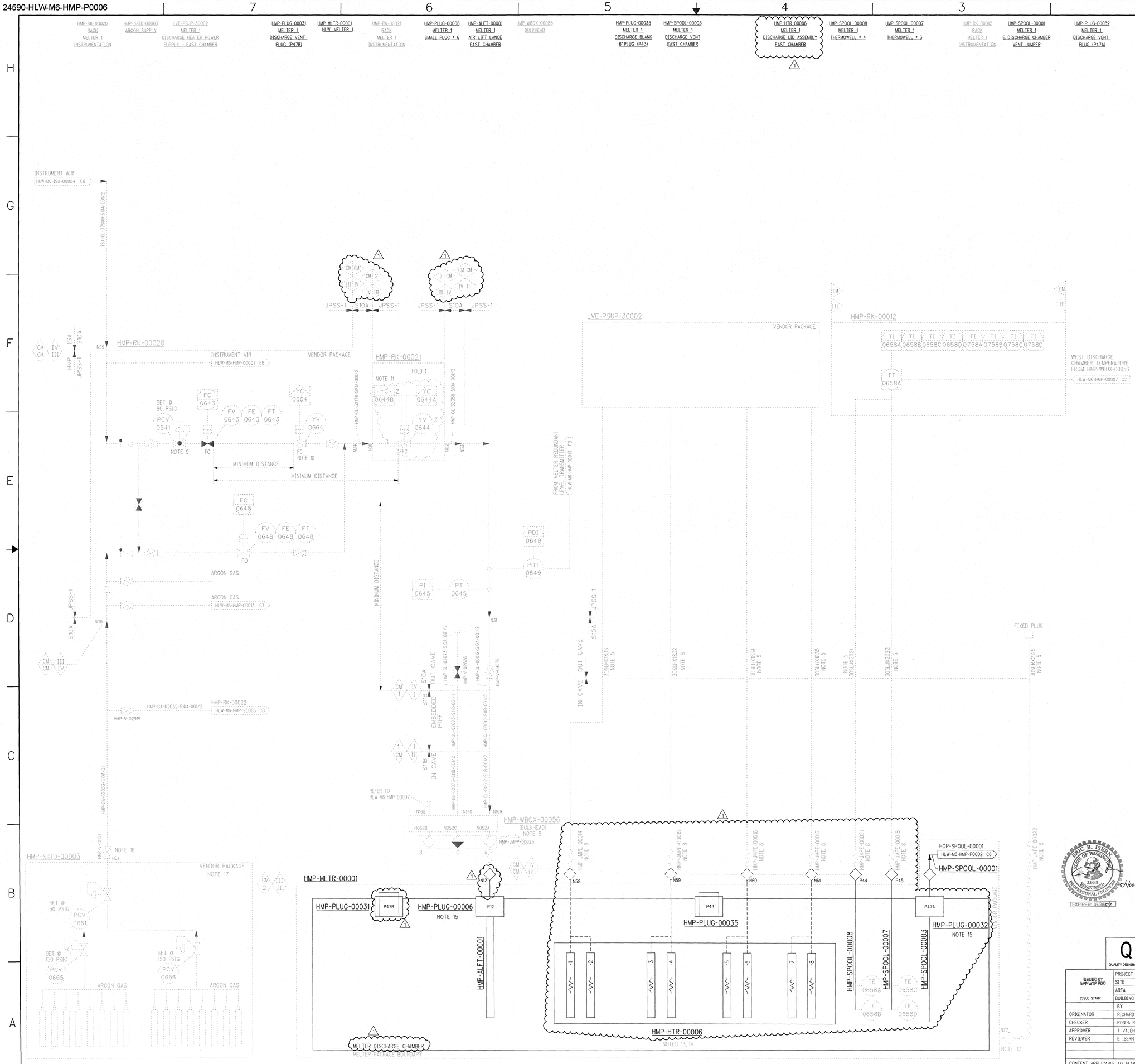

NOTES:

THE FOLLOWING NOTES ARE GENERAL NOTES FOR HMP SYSTEM.

1. SEE DRAWINGS 24590-WTP-M6-50-P0001 THROUGH 24590-WTP-M6-50-P0006 FOR GENERAL NOTES, SYMBOLS AND LEGEND.
2. JPSS-1 SPECIFICATION IS DEFINED IN INSTRUMENT PIPING MATERIAL CLASS SPEC NO. 24590-WTP-3PS-JXF0-T0001. SPECIFICATION CHANGE ALSO DEFINES AREA OF RESPONSIBILITY.
3. LOCATE OUT CAVE ISOLATION VALVES AS CLOSE AS POSSIBLE TO IN CAVE-OUT CAVE BOUNDARY.
4. PROCESS JUMPERS ARE COMMERCIAL QUALITY AND SEISMIC CATEGORY III EXCEPT AS INDICATED.
5. JOGGLED PENETRATIONS AND WALL MODULES INCLUDING INTERNAL PIPING ARE QUALITY LEVEL 1 AND SEISMIC CATEGORY I. BULKHEAD STRUCTURES ARE QUALITY LEVEL 2 AND SEISMIC CATEGORY II. SERVICE PIPING WITHIN THE BULKHEAD IS COMMERCIAL GRADE AND SEISMIC CATEGORY III.
6. THE REQUIRED BATCH SEQUENCES, PERMISSIVES, INTERLOCKS, ALARMS AND OPERATOR INTERFACE POINTS FOR THE HMP SYSTEM ARE DESCRIBED IN THE SOFTWARE FUNCTIONAL SPECIFICATION 24590-HLW-3PS-HMP-T0001.
7. FOR ITS PERMISSIVES AND INTERLOCKS, REFER TO SAFETY SYSTEM REQUIREMENT SPECIFICATIONS 24590-HLW-3PS-PPJ-T0008 AND 24590-HLW-3PS-PPJ-T0009 (TO BE ISSUED).
8. FOR ELECTRICAL JUMPERS, REFER TO SYSTEM BLOCK DIAGRAMS 24590-HLW-J1-HMP-00001 THROUGH 00010.

THE FOLLOWING NOTES ARE SPECIFIC TO THIS DRAWING.

9. RACK MOUNTED PRESSURE REGULATORS (PCV) ARE PROVIDED WITH AN INTEGRAL PRESSURE INDICATOR.
10. ANGLE BODY PISTON VALVE CONSISTING OF A VALVE BODY, VALVE ACTUATOR AND PILOT SOLENOID.
11. AIRLIFT AIR FLOW INTERLOCKED WITH HIGH HIGH CANISTER LEVEL DETECTION.
12. DISCHARGE AUXILIARY HEATER PRE-WIRED FOR FUTURE USE. HEATER RATED AT 4KW, 208 VOLTS AND SINGLE PHASE.
13. ELECTRICAL JUMPERS SHOWN ON DISCHARGE HEATER SINGLE LINE DRAWING NUMBER 24590-HLW-E1-LVE-10002.
14. FOR DISCHARGE HEATERS CONFIGURATION REFER TO 24590-HLW-E1-LVE-10002 AND 24590-HLW-J0-HMP-00006.
15. PLUGS ARE ALTERNATE INSERTS FOR MELTER PORTS.
16. OUTSIDE THE BUILDING ADJACENT TO HMP-SKID-00003.
17. VENDOR PACKAGE TO INCLUDE ISOLATION VALVE, PCV, PSV, AUTOMATIC SWITCHING DEVICE, ETC.
18. DELETED.
19. CONTENTS OF THIS DOCUMENT ARE DANGEROUS WASTE PERMIT AFFECTING.
20. THE PORTIONS OF THIS DRAWING SHOWN IN PHANTOM ARE CONSIDERED NON-PERMIT AFFECTING AND ARE NOT SUBJECT TO THE REGULATORY REQUIREMENTS OF THE WAC CODE FOR THE DANGEROUS WASTE PERMIT TO THE EXTENT THAT THOSE PORTIONS DO NOT IMPACT DANGEROUS WASTE AREAS/OPERATIONS.
21. REVISION 1 INCLUDES ADDITION OF SEISMIC AND QUALITY FLAGS AND CHANGES TO BOLDING.

HOLD/OPEN ITEMS:

1. THE IDENTIFIED ITEMS ARE NOT RELEASED FOR PROCUREMENT OR CONSTRUCTION ACTIVITIES UNTIL APPROVAL OF ABAR 24590-WTP-SE-ENS-04-0117, UNLESS SPECIFICALLY AUTHORIZED UNDER 10 CFR 830.206.

REFERENCES:

1. DURATEK DRAWING WTP-P-24003 SHEETS 4, 5 & 6 OR PROJECT NO. 24590-101-TSA-W0000-0010-07-07.
2. PFD DRAWING NO. 24590-HLW-M5-V17T-P0002, "HLW VITRIFICATION MELTER 1 (HMP SYSTEM)".

PLEASE NOTE THAT SOURCE, SPECIAL NUCLEAR AND BYPRODUCT MATERIALS, AS DEFINED IN THE ATOMIC ENERGY ACT OF 1954 (AEA), ARE REGULATED AT THE U.S. DEPARTMENT OF ENERGY (DOE) FACILITIES EXCLUSIVELY BY DOE ACTING PURSUANT TO ITS AEA AUTHORITY. DOE ASSERTS, THAT PURSUANT TO THE AEA, IT HAS SOLE AND EXCLUSIVE RESPONSIBILITY AND AUTHORITY TO REGULATE SOURCE, SPECIAL NUCLEAR, AND BYPRODUCT MATERIAL AT DOE-OWNED NUCLEAR FACILITIES. INFORMATION CONTAINED HEREIN ON RADIONUCLIDES IS PROVIDED FOR PROCESS DESCRIPTION PURPOSES ONLY.

ERIC B. ISERN — STATE OF WASHINGTON — 33449 — REGISTERED PROFESSIONAL ENGINEER — 5/1/06 — EXPIRES: 07/28/06

REV	DESCRIPTION	ORG	CHKD	RVWD	APVD	DATE
1	REVISED PER NOTE 21	RDP	RR	EI	TV	5/1/06
0	ISSUED FOR PERMITTING USE	RDP	RR	EI	TV	4/11/05

REVISION HISTORY

Q — QUALITY DESIGNATOR

ISSUED BY (WPP-WTP PDC)

PROJECT No.	24590
SITE	HANFORD
AREA	200E
BUILDING No.	30

ISSUE STAMP

	BY	DATE
ORIGINATOR	RICHARD PETERS	4/11/05
CHECKER	RONDA RUSSELL	4/11/05
APPROVER	T VALENTINO	4/11/05
REVIEWER	E ISERN	4/11/05

CONTENT APPLICABLE TO ALARA? [X] YES [ ] NO
ADR NO. NA REV:
SAFETY SCREEN REQUIRED? [ ] YES [X] NO EKMS INITIAL IF YES

BECHTEL

RIVER PROTECTION PROJECT
WASTE TREATMENT PLANT
2435 STEVENS CENTER PLACE
RICHLAND, WA 99354

CONTRACT No: DE-AC27-01RV14136

P&ID - HLW MELTER 1 SYSTEM EAST DISCHARGE HEATERS AND AIRLIFT

SCALE: NONE

24590-HLW-M6-HMP-P0006

REV 1

SAFETY SCREEN IS REQUIRED FOR DRAWING TYPES IDENTIFIED IN 24590-WTP-GPP-SREG-002

"E" SIZE - 44x34
COMPUTER GENERATED - MANUAL CHANGES NOT PERMITTED

R10874453

04/28/2006 02:29:31 PM

PLOTTED BY: wmahoney
C:\Work\dms05070\HLW\M6\HMP\P0006.dgn

FORM E_SDN.DGN 02/2003

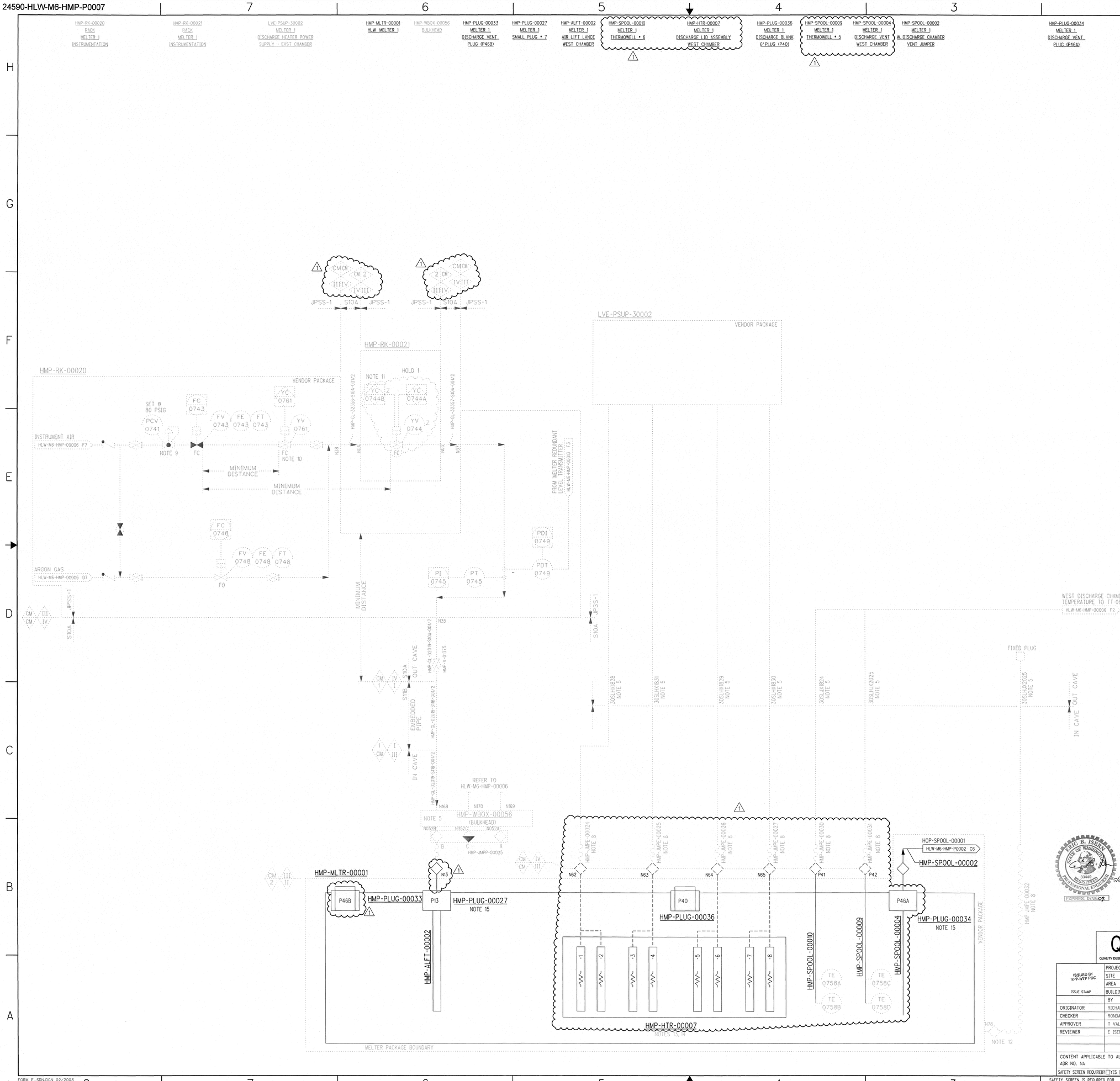

NOTES:

THE FOLLOWING NOTES ARE GENERAL NOTES FOR HMP SYSTEM.

1. SEE DRAWINGS 24590-WTP-M6-50-P0001 THROUGH 24590-WTP-M6-50-P0006 FOR GENERAL NOTES, SYMBOLS AND LEGEND.
2. JPSS-1 SPECIFICATION IS DEFINED IN INSTRUMENT PIPING MATERIAL CLASS SPEC NO. 24590-WTP-3PS-JXF0-T0001. SPECIFICATION CHANGE ALSO DEFINES AREA OF RESPONSIBILITY.
3. LOCATE OUT CAVE ISOLATION VALVES AS CLOSE AS POSSIBLE TO IN CAVE-OUT CAVE BOUNDARY.
4. PROCESS JUMPERS ARE COMMERCIAL QUALITY AND SEISMIC CATEGORY III EXCEPT AS INDICATED.
5. JOGGLED PENETRATIONS AND WALL MODULES INCLUDING INTERNAL PIPING ARE QUALITY LEVEL 1 AND SEISMIC CATEGORY I. BULKHEAD STRUCTURES ARE QUALITY LEVEL 2 AND SEISMIC CATEGORY II. SERVICE PIPING WITHIN THE BULKHEAD IS COMMERCIAL GRADE AND SEISMIC CATEGORY III.
6. THE REQUIRED BATCH SEQUENCES, PERMISSIVES, INTERLOCKS, ALARMS AND OPERATOR INTERFACE POINTS FOR THE HMP SYSTEM ARE DESCRIBED IN THE SOFTWARE FUNCTIONAL SPECIFICATION 24590-HLW-3PS-HMP-T0001.
7. FOR ITS PERMISSIVES AND INTERLOCKS, REFER TO SAFETY SYSTEM REQUIREMENT SPECIFICATIONS 24590-HLW-3PS-PPJ-T0008 AND 24590-HLW-3PS-PPJ-T0009 (TO BE ISSUED).
8. FOR ELECTRICAL JUMPERS, REFER TO SYSTEM BLOCK DIAGRAMS 24590-HLW-J1-HMP-00001 THROUGH 00010.

THE FOLLOWING NOTES ARE SPECIFIC TO THIS DRAWING.

9. RACK MOUNTED PRESSURE REGULATORS (PCV) ARE PROVIDED WITH AN INTEGRAL PRESSURE INDICATOR.
10. ANGLE BODY PISTON VALVE CONSISTING OF A VALVE BODY, VALVE ACTUATOR AND PILOT SOLENOID.
11. AIRLIFT AIR FLOW INTERLOCKED WITH HIGH HIGH CANISTER LEVEL DETECTION.
12. DISCHARGE AUXILIARY HEATER PRE-WIRED FOR FUTURE USE. HEATERS RATED AT 4KW, 208 VOLTS AND 1 PHASE.
13. ELECTRICAL JUMPERS SHOWN ON DISCHARGE HEATER SINGLE LINE DRAWING NUMBER 24590-HLW-E1-LVE-10002.
14. FOR DISCHARGE HEATERS CONFIGURATION, REFER TO 24590-HLW-E1-LVE-10002 AND HLW 24590-HLW-J0-HMP-00007.
15. PLUGS ARE ALTERNATE INSERTS FOR MELTER PORTS.
16. DELETED.
17. CONTENTS OF THIS DOCUMENT ARE DANGEROUS WASTE PERMIT AFFECTING.
18. THE PORTIONS OF THIS DRAWING SHOWN IN PHANTOM ARE CONSIDERED NON-PERMIT AFFECTING AND ARE NOT SUBJECT TO THE REGULATORY REQUIREMENTS OF THE WAC CODE FOR THE DANGEROUS WASTE PERMIT TO THE EXTENT THAT THOSE PORTIONS DO NOT IMPACT WASTE AREAS/OPERATIONS.
19. REVISION 1 INCLUDES CHANGES TO BOLDING AND SEISMIC AND QUALITY FLAGS.

HOLD/OPEN ITEMS:

1. THE IDENTIFIED ITEMS ARE NOT RELEASED FOR PROCUREMENT OR CONSTRUCTION ACTIVITIES UNTIL APPROVAL OF ABAR 24590-WTP-SE-ENS-04-0117, UNLESS SPECIFICALLY AUTHORIZED UNDER 10 CFR 830.206.

REFERENCES:

1. DURATEK DRAWING WTP-P-24003 SHEETS 4, 5 & 6 OR PROJECT DWG 24590-101-TSA-W000-0010-07-07.
2. PFD DRAWING NO. 24590-HLW-M5-V17T-P0002, "HLW VITRIFICATION MELTER 1 (HMP SYSTEM)".

PLEASE NOTE THAT SOURCE, SPECIAL NUCLEAR AND BYPRODUCT MATERIALS, AS DEFINED IN THE ATOMIC ENERGY ACT OF 1954 (AEA), ARE REGULATED AT THE U.S. DEPARTMENT OF ENERGY (DOE) FACILITIES EXCLUSIVELY BY DOE ACTING PURSUANT TO ITS AEA AUTHORITY. DOE ASSERTS, THAT PURSUANT TO THE AEA, IT HAS SOLE AND EXCLUSIVE RESPONSIBILITY AND AUTHORITY TO REGULATE SOURCE, SPECIAL NUCLEAR, AND BYPRODUCT MATERIAL AT DOE-OWNED NUCLEAR FACILITIES. INFORMATION CONTAINED HEREIN ON RADIONUCLIDES IS PROVIDED FOR PROCESS DESCRIPTION PURPOSES ONLY.

ERIC B. ISERN — STATE OF WASHINGTON — 33449 — REGISTERED PROFESSIONAL ENGINEER — EXPIRES: 07/28/07

Q — QUALITY DESIGNATOR

REVISION HISTORY

REV	DESCRIPTION	ORG	CHKD	RVWD	APVD	DATE
1	REVISED PER NOTE 19	RDP	RR	EI	TV	5/1/06
0	ISSUED FOR PERMITTING USE	RDP	RR	EI	TV	4/11/05

ISSUED BY (HPP-WTP PDC)

PROJECT No.	24590
SITE	HANFORD
AREA	200E
BUILDING No.	30

ISSUE STAMP

	BY	DATE
ORIGINATOR	RICHARD PETERS	4/11/05
CHECKER	RONDA RUSSELL	4/11/05
APPROVER	T VALENTINO	4/11/05
REVIEWER	E ISERN	4/11/05

CONTENT APPLICABLE TO ALARA? [X] YES [ ] NO
ADR NO. NA REV:
SAFETY SCREEN REQUIRED? [ ] YES [X] NO EMMS INITIAL IF YES

BECHTEL

RIVER PROTECTION PROJECT
WASTE TREATMENT PLANT
2435 STEVENS CENTER PLACE
RICHLAND, WA 99354

CONTRACT No: DE-AC27-01RV14136

P&ID - HLW MELTER 1 SYSTEM WEST DISCHARGE HEATERS AND AIRLIFT

SCALE: NONE

24590-HLW-M6-HMP-P0007

REV 1

R1067454

04/28/2006 02:25:35

PLOTTED BY: eesatb
C:\Work\dms05070\HLW\M6\HMP\P0007.dgn

FORM E_SDN.DGN 02/2003

SAFETY SCREEN IS REQUIRED FOR DRAWING TYPES IDENTIFIED IN 24590-WTP-GPP-SREG-002

"E" SIZE - 44x34
COMPUTER GENERATED - MANUAL CHANGES NOT PERMITTED

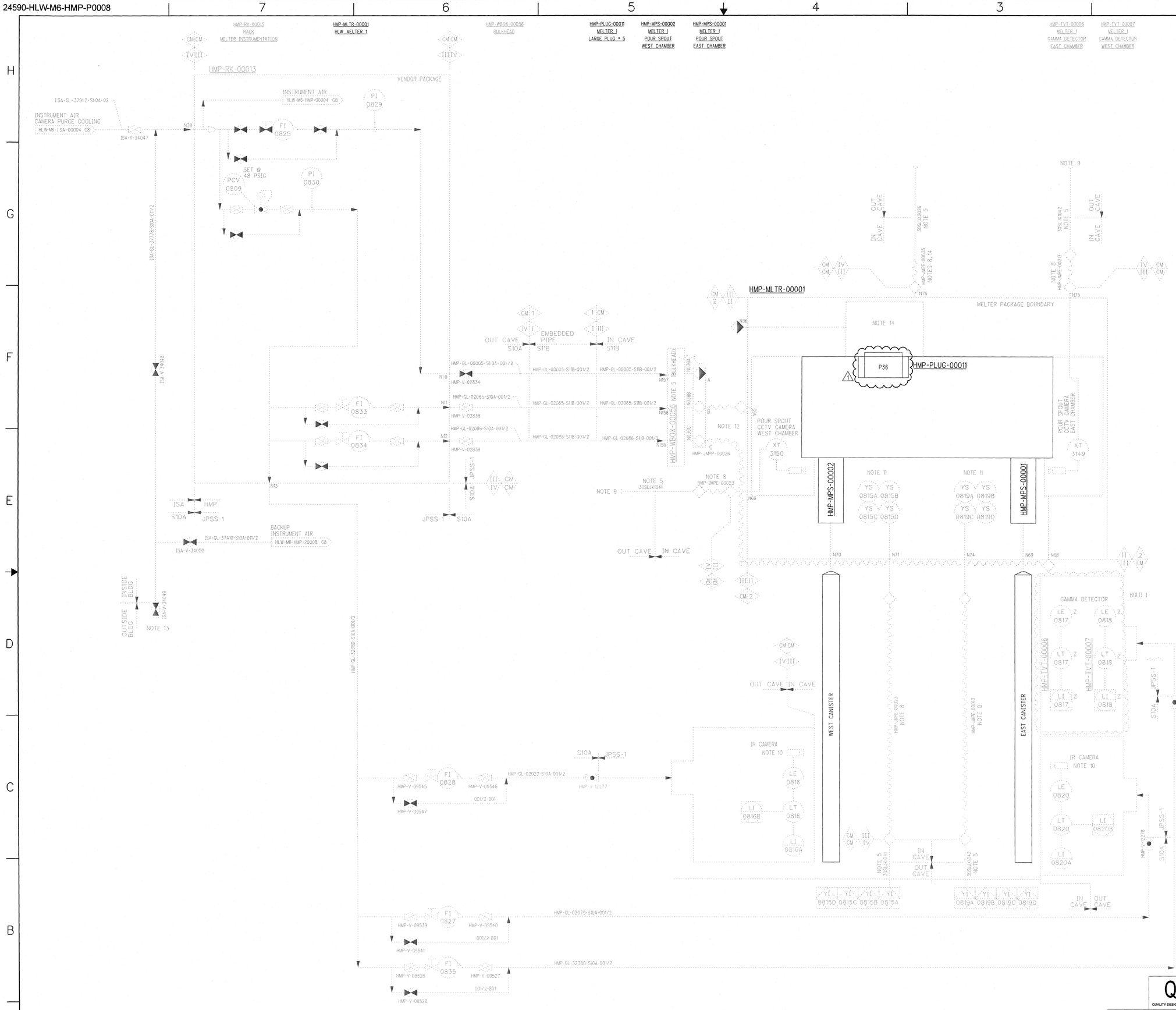

NOTES:

THE FOLLOWING NOTES ARE GENERAL NOTES FOR HMP SYSTEM.

1. SEE DRAWINGS 24590-WTP-M6-50-P0001 THROUGH 24590-WTP-M6-50-P0006 FOR GENERAL NOTES, SYMBOLS AND LEGEND.
2. JPSS-1 SPECIFICATION IS DEFINED IN INSTRUMENT PIPING MATERIAL CLASS SPEC NO. 24590-WTP-3PS-JXF0-T0001. SPECIFICATION CHANGE ALSO DEFINES AREA OF RESPONSIBILITY.
3. LOCATE OUT CAVE ISOLATION VALVES AS CLOSE AS POSSIBLE TO IN CAVE-OUT CAVE BOUNDARY.
4. PROCESS JUMPERS ARE COMMERCIAL QUALITY AND SEISMIC CATEGORY III EXCEPT AS INDICATED.
5. JOGGLED PENETRATIONS AND WALL MODULES INCLUDING INTERNAL PIPING ARE QUALITY LEVEL 1 AND SEISMIC CATEGORY I. BULKHEAD STRUCTURES ARE QUALITY LEVEL 2 AND SEISMIC CATEGORY II. SERVICE PIPING WITHIN THE BULKHEAD IS COMMERCIAL GRADE AND SEISMIC CATEGORY III.
6. THE REQUIRED BATCH SEQUENCES, PERMISSIVES, INTERLOCKS, ALARMS AND OPERATOR INTERFACE POINTS FOR THE HMP SYSTEM ARE DESCRIBED IN THE SOFTWARE FUNCTIONAL SPECIFICATION 24590-HLW-3PS-HMP-T0001.
7. FOR ITS PERMISSIVES AND INTERLOCKS, REFER TO SAFETY SYSTEM REQUIREMENT SPECIFICATIONS 24590-HLW-3PS-PPJ-T0008 AND 24590-HLW-3PS-PPJ-T0009 (TO BE ISSUED).
8. FOR ELECTRICAL JUMPERS, REFER TO SYSTEM BLOCK DIAGRAMS 24590-HLW-J1-HMP-00001 THROUGH 00010.

THE FOLLOWING NOTES ARE SPECIFIC TO THIS DRAWING.

9. CCTV CAMERA POWER/VIDEO/CONTROL CABLES TO CONNECT TO PTJ SYSTEM ENCLOSURE.
10. EAST AND WEST IR CAMERA MOUNTED IN THE CANISTER POUR TUNNEL THROUGH WALL LINERS.
11. DRIP PAN POSITION SWITCHES DETECT PRESENCE AND POSITION OF PRODUCT CANISTER.
12. AIR CONNECTION INCLUDES SUPPLY FOR POUR SPOUT CAMERAS AND DRIP TRAY AIR CYLINDERS. DRIP TRAY IS PART OF VENDOR PACKAGE.
13. LOCATION OUTSIDE OF BUILDING TO BE DETERMINED BY PLANT DESIGN.
14. FUTURE INSTALLATION.
15. DELETED.
16. **CONTENTS OF THIS DOCUMENT ARE DANGEROUS WASTE PERMIT AFFECTING.**
17. **THE PORTIONS OF THIS DRAWING SHOWN IN PHANTOM ARE CONSIDERED NON-PERMIT AFFECTING AND ARE NOT SUBJECT TO THE REGULATORY REQUIREMENTS OF THE WAC CODE FOR THE DANGEROUS WASTE PERMIT TO THE EXTENT THAT THOSE PORTIONS DO NOT IMPACT DANGEROUS WASTE AREAS/OPERATIONS.**
18. **REVISION 1 CHANGES INCLUDE ADDED BOLDING.**

HOLD/OPEN ITEMS:

1. THE IDENTIFIED ITEMS ARE NOT RELEASED FOR PROCUREMENT OR CONSTRUCTION ACTIVITIES UNTIL APPROVAL OF ABAR 24590-WTP-SE-ENS-04-0117, UNLESS SPECIFICALLY AUTHORIZED UNDER 10 CFR 830.206.

REFERENCE:

1. DURATEK DRAWING NO. WTP-P-24010 SHT 1 OR PROJECT DWG 24590-101-TSA-W000-0010-07-012.
2. PFD DRAWING 24590-HLW-M5-V17T-P0002, "HLW VITRIFICATION MELTER 1 (HMP SYSTEM)".
3. DRAWING NO. 24590-HLW-M0-HMP-00137, "HLW VITRIFICATION SYSTEM HMP DESIGN PROPOSAL DRAWING, POUR TUNNEL 1 INFRARED AND GAMMA CANISTER LEVEL DETECTION SYSTEM".

PLEASE NOTE THAT SOURCE, SPECIAL NUCLEAR AND BYPRODUCT MATERIALS, AS DEFINED IN THE ATOMIC ENERGY ACT OF 1954 (AEA), ARE REGULATED AT THE U.S. DEPARTMENT OF ENERGY (DOE) FACILITIES EXCLUSIVELY BY DOE ACTING PURSUANT TO ITS AEA AUTHORITY. DOE ASSERTS, THAT PURSUANT TO THE AEA, IT HAS SOLE AND EXCLUSIVE RESPONSIBILITY AND AUTHORITY TO REGULATE SOURCE, SPECIAL NUCLEAR, AND BYPRODUCT MATERIAL AT DOE-OWNED NUCLEAR FACILITIES. INFORMATION CONTAINED HEREIN ON RADIONUCLIDES IS PROVIDED FOR PROCESS DESCRIPTION PURPOSES ONLY.

REV	DESCRIPTION	ORG	CHKD	RVWD	APVD	DATE
1	ISSUED PER NOTE 18	RDP	WAS	JS	RV	5/11/06
0	ISSUED FOR PERMITTING USE	RDP	RR	EI	TV	4/11/05

REVISION HISTORY

Q
QUALITY DESIGNATOR

ISSUED BY: HPP-WTP PDC
ISSUE STAMP

PROJECT No.	24590	
SITE	HANFORD	
AREA	200E	
BUILDING No.	30	
	BY	DATE
ORIGINATOR	RICHARD PETERS	4/11/05
CHECKER	RONDA RUSSELL	4/11/05
APPROVER	T VALENTINO	4/11/05
REVIEWER	E ISERN	4/11/05

CONTENT APPLICABLE TO ALARA? [X] YES [ ] NO
ADR NO. NA REV:
SAFETY SCREEN REQUIRED? [ ] YES [X] NO EMS INITIAL IF YES

ERIC B. ISERN, STATE OF WASHINGTON, 33449, REGISTERED PROFESSIONAL ENGINEER, 5/1/06
EXPIRES: 07/28/06

BECHTEL

RIVER PROTECTION PROJECT
WASTE TREATMENT PLANT
2435 STEVENS CENTER PLACE
RICHLAND, WA 99354

CONTRACT No: DE-AC27-01RV14136

P&ID - HLW
MELTER PROCESS SYSTEM
MELTER 1
GLASS POUR & MONITORING INSTRUMENTATION

SCALE: NONE
24590-HLW-M6-HMP-P0008
REV 1

SAFETY SCREEN IS REQUIRED FOR DRAWING TYPES IDENTIFIED IN 24590-WTP-GPP-SEQ-002

'E' SIZE - 44x34
COMPUTER GENERATED - MANUAL CHANGES NOT PERMITTED

R10674455

04/28/2006 02:35:45 PM

PLOTTED BY: eewebb
C:\Work\dms050706\HLW\M6\HMP\P0008.dgn

FORM E_SDN.DGN 02/2003

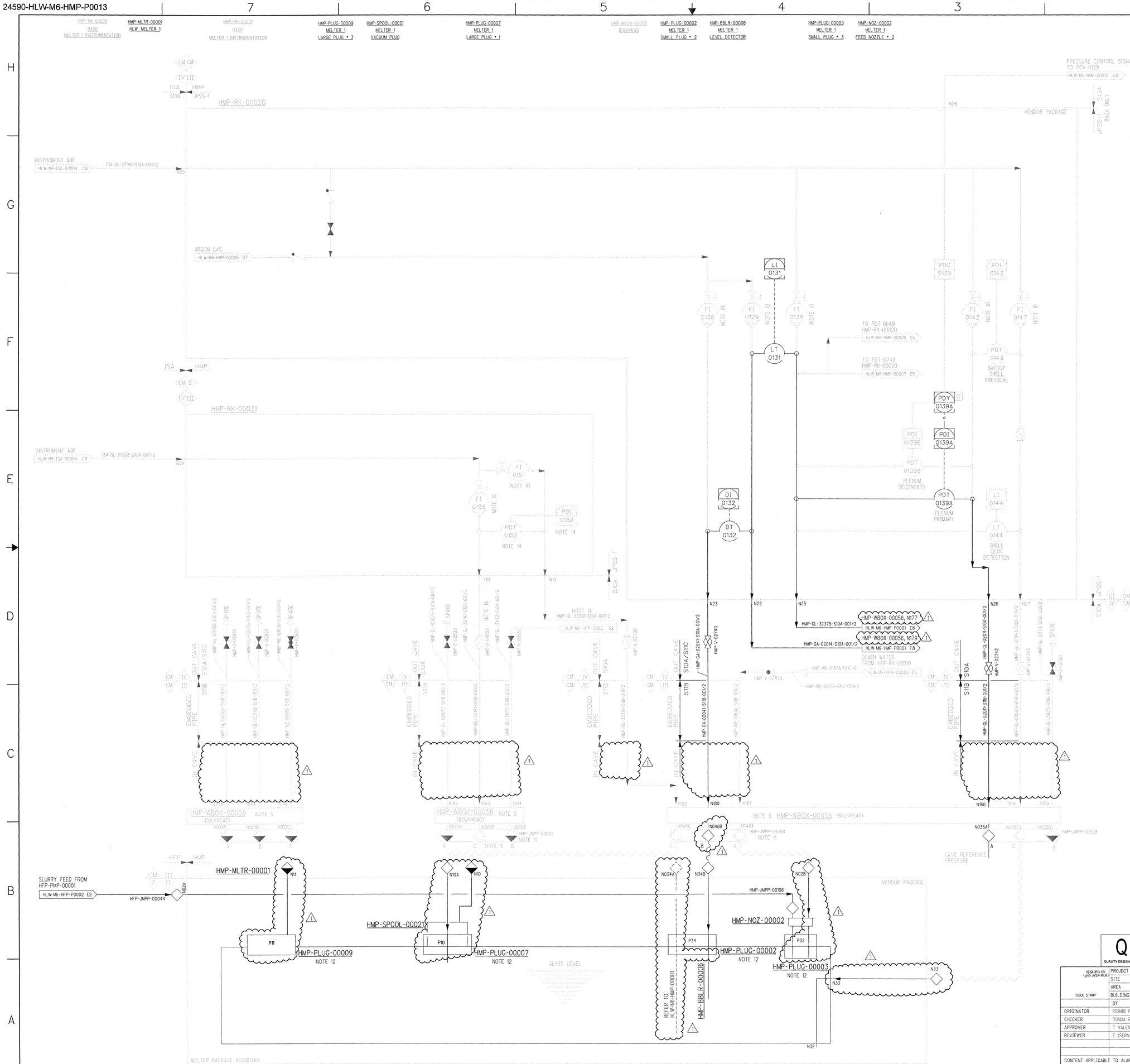

NOTES:

THE FOLLOWING NOTES ARE GENERAL NOTES FOR HMP SYSTEM.

1. SEE DRAWINGS 24590-WTP-M6-50-P0001 THROUGH 24590-WTP-M6-50-P0006 FOR GENERAL NOTES, SYMBOLS AND LEGEND.
2. JPSS-1 SPECIFICATION IS DEFINED IN INSTRUMENT PIPING MATERIAL CLASS SPEC NO.24590-WTP-3PS-JXFQ-T0001. SPECIFICATION CHANGE ALSO DEFINES AREA OF RESPONSIBILITY.
3. LOCATE OUT CAVE ISOLATION VALVES AS CLOSE AS POSSIBLE TO IN CAVE-OUT CAVE BOUNDARY.
4. PROCESS JUMPERS ARE COMMERCIAL QUALITY AND SEISMIC CATEGORY III EXCEPT AS INDICATED.
5. JOGGLED PENETRATIONS AND WALL MODULES INCLUDING INTERNAL PIPING ARE QUALITY LEVEL 1 AND SEISMIC CATEGORY I. BULKHEAD STRUCTURES ARE QUALITY LEVEL 2 AND SEISMIC CATEGORY II. SERVICE PIPING WITHIN THE BULKHEAD IS COMMERCIAL GRADE AND SEISMIC CATEGORY III.
6. THE REQUIRED BATCH SEQUENCES, PERMISSIVES, INTERLOCKS, ALARMS AND OPERATOR INTERFACE POINTS FOR THE HMP SYSTEM ARE DESCRIBED IN THE SOFTWARE FUNCTIONAL SPECIFICATION 24590-HLW-3PS-HMP-T0001.
7. FOR ITS PERMISSIVES AND INTERLOCKS, REFER TO SAFETY SYSTEM REQUIREMENT SPECIFICATIONS 24590-HLW-3PS-PPJ-T0008 AND 24590-HLW-3PS-PPJ-T0009 (TO BE ISSUED).
8. FOR ELECTRICAL JUMPERS, REFER TO SYSTEM BLOCK DIAGRAMS 24590-HLW-J1-HMP-00001 THROUGH 00010.

THE FOLLOWING NOTES ARE SPECIFIC TO THIS DRAWING.

9. CAVE REFERENCE PRESSURE FOR ITS PRESSURE SENSOR.
10. VARIABLE AREA FLOW METER WITH INTEGRAL FLOW CONTROL VALVE AND PRESSURE REGULATOR.
11. JUMPER IS QUALITY LEVEL 2 AND SEISMIC CATEGORY III.
12. PLUGS ARE ALTERNATE INSERTS FOR MELTER PORTS.
13. DELETED.
14. CONTENTS OF THIS DOCUMENT ARE DANGEROUS WASTE PERMIT AFFECTING
15. THE PORTIONS OF THIS DRAWING SHOWN IN PHANTOM ARE CONSIDERED NON-PERMIT AFFECTING AND ARE NOT SUBJECT TO THE REGULATORY REQUIREMENTS OF THE WAC CODE FOR THE DANGEROUS WASTE PERMIT TO THE EXTENT THAT THOSE PORTIONS DO NOT IMPACT DANGEROUS WASTE AREAS/OPERATIONS.
16. REVISION 1 CHANGES INCLUDE ADDITIONAL BOLDING. DELETION OF EXTRANEOUS LINE NUMBERS.

REFERENCES:

1. PFD DRAWING 24590-HLW-M5-V17T-P0002, "HLW VITRIFICATION MELTER 1 (HMP SYSTEM)".

ERIC B. ISERN
STATE OF WASHINGTON
33449
REGISTERED PROFESSIONAL ENGINEER
EXPIRES: 07/28/06

PLEASE NOTE THAT SOURCE, SPECIAL NUCLEAR AND BYPRODUCT MATERIALS, AS DEFINED IN THE ATOMIC ENERGY ACT OF 1954 (AEA), ARE REGULATED AT THE U.S. DEPARTMENT OF ENERGY (DOE) FACILITIES EXCLUSIVELY BY DOE ACTING PURSUANT TO ITS AEA AUTHORITY. DOE ASSERTS, THAT PURSUANT TO THE AEA, IT HAS SOLE AND EXCLUSIVE RESPONSIBILITY AND AUTHORITY TO REGULATE SOURCE, SPECIAL NUCLEAR, AND BYPRODUCT MATERIAL AT DOE-OWNED NUCLEAR FACILITIES. INFORMATION CONTAINED HEREIN ON RADIONUCLIDES IS PROVIDED FOR PROCESS DESCRIPTION PURPOSES ONLY.

Q
QUALITY DESIGNATOR

REV	DESCRIPTION	ORG	CHKD	RVWD	APVD	DATE
1	REVISED PER NOTE 16	CDP				5/2/06
0	ISSUED FOR PERMITTING USE	RD	RR	EI	TV	4/11/05

REVISION HISTORY

ISSUED BY: TMPP-WTP PDC

ISSUE STAMP

PROJECT No.	24590	
SITE	HANFORD	
AREA	200E	
BUILDING No.	30	
	BY	DATE
ORIGINATOR	RICHARD PETERS	4/11/05
CHECKER	RONDA RUSSELL	4/11/05
APPROVER	T VALENTINO	4/11/05
REVIEWER	E ISERN	4/11/05

CONTENT APPLICABLE TO ALARA? [X] YES [ ] NO
ADR NO. NA REV:
SAFETY SCREEN REQUIRED? [ ] YES [X] NO E&NS INITIAL IF YES

BECHTEL

RIVER PROTECTION PROJECT
WASTE TREATMENT PLANT
2435 STEVENS CENTER PLACE
RICHLAND, WA 99354

CONTRACT No: DE-AC27-01RV14136

P&ID - HLW MELTER 1 SYSTEM PRESSURE, DENSITY AND LEVEL DETECTION

SCALE: NONE

24590-HLW-M6-HMP-P0013

REV 1

SAFETY SCREEN IS REQUIRED FOR DRAWING TYPES IDENTIFIED IN 24590-WTP-GPP-SREQ-002

"E" SIZE - 44x34
COMPUTER GENERATED - MANUAL CHANGES NOT PERMITTED

R10674456

05/02/2006 11:26:43 AM

PLOTTED BY: rwesto
C:\Work\dms0507\HLW\M6\HMPP0013.dgn

FORM E_SDN.DGN 02/2003

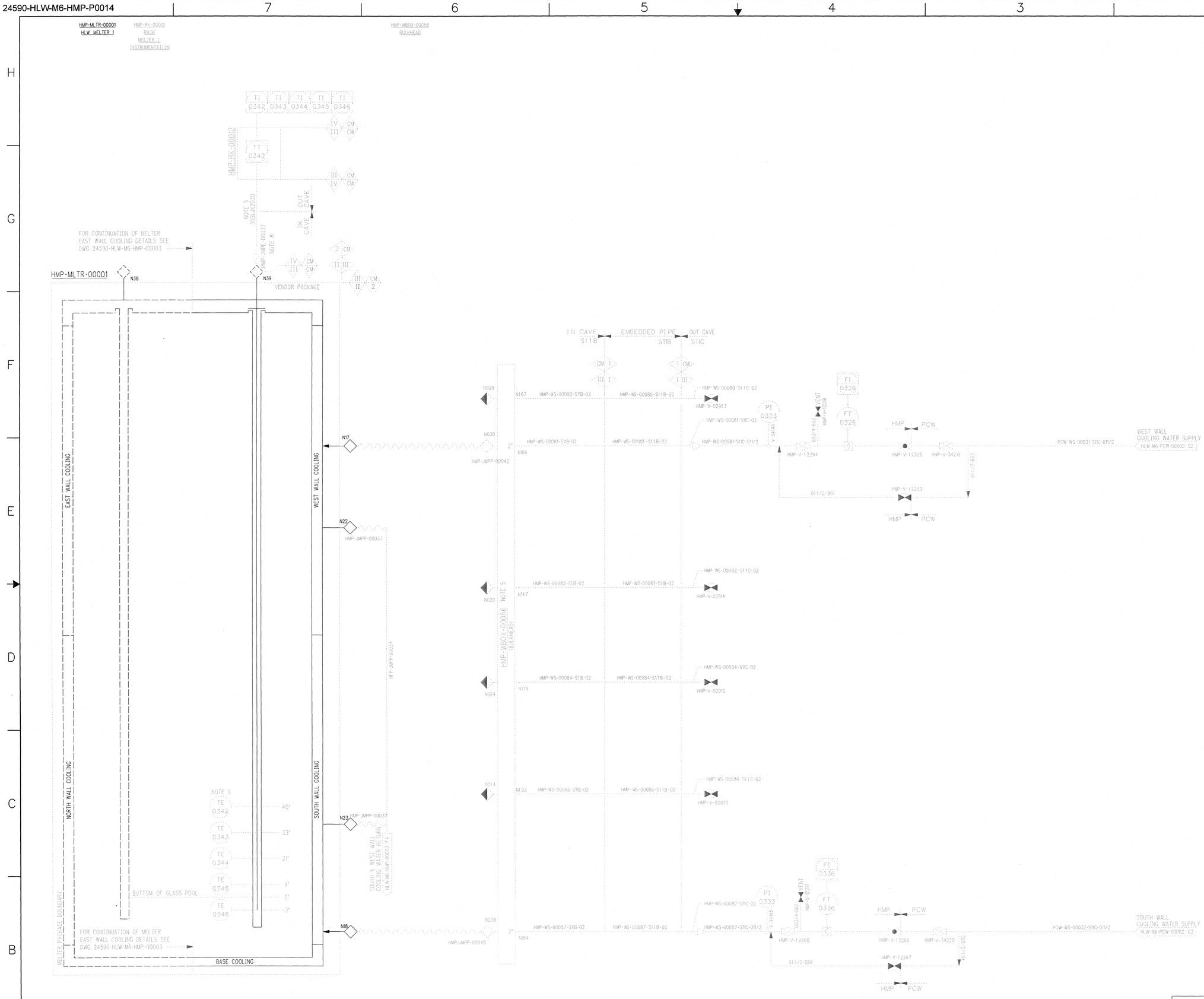

NOTES:

THE FOLLOWING NOTES ARE GENERAL NOTES FOR HMP SYSTEM.

1. SEE DRAWINGS 24590-WTP-M6-50-P0001 THROUGH 24590-WTP-M6-50-P0006 FOR GENERAL NOTES, SYMBOLS AND LEGEND.
2. JPSS-I SPECIFICATION IS DEFINED IN INSTRUMENT PIPING MATERIAL CLASS SPEC NO. 24590-WTP-3PS-JXFO-T0001. SPECIFICATION CHANGE ALSO DEFINES AREA OF RESPONSIBILITY.
3. LOCATE OUT CAVE ISOLATION VALVES AS CLOSE AS POSSIBLE TO IN CAVE-OUT CAVE BOUNDARY.
4. PROCESS JUMPERS ARE COMMERCIAL QUALITY AND SEISMIC CATEGORY III EXCEPT AS INDICATED.
5. JOGGLED PENETRATIONS AND WALL MODULES INCLUDING INTERNAL PIPING ARE QUALITY LEVEL 1 AND SEISMIC CATEGORY I. BULKHEAD STRUCTURES ARE QUALITY LEVEL 2 AND SEISMIC CATEGORY II. SERVICE PIPING WITHIN THE BULKHEAD IS COMMERCIAL GRADE AND SEISMIC CATEGORY III.
6. THE REQUIRED BATCH SEQUENCES, PERMISSIVES, INTERLOCKS, ALARMS AND OPERATOR INTERFACE POINTS FOR THE HMP SYSTEM ARE DESCRIBED IN THE SOFTWARE FUNCTIONAL SPECIFICATION 24590-HLW-3PS-HMP-T0001.
7. FOR ITS PERMISSIVES AND INTERLOCKS, REFER TO SAFETY SYSTEM REQUIREMENT SPECIFICATIONS 24590-HLW-3PS-PPJ-T0008 AND 24590-HLW-3PS-PPJ-T0009 (TO BE ISSUED).
8. FOR ELECTRICAL JUMPERS, REFER TO SYSTEM BLOCK DIAGRAMS 24590-HLW-J1-HMP-00001 THROUGH 00010.

THE FOLLOWING NOTES ARE SPECIFIC TO THIS DRAWING

9. REFRACTORY THERMOCOUPLE LOCATIONS RELATIVE TO BOTTOM OF GLASS POOL.
10. DELETED.
11. CONTENTS OF THIS DOCUMENT ARE DANGEROUS WASTE PERMIT AFFECTING.
12. THE PORTIONS OF THIS DRAWING SHOWN IN PHANTOM ARE CONSIDERED NON-PERMIT AFFECTING AND ARE NOT SUBJECT TO THE REGULATORY REQUIREMENTS OF THE WAC CODE FOR THE DANGEROUS WASTE PERMIT TO THE EXTENT THAT THOSE PORTIONS DO NOT IMPACT DANGEROUS WASTE AREAS/OPERATIONS.

REFERENCES:

1. DURATEK DRAWING NO. WTP-P-24004 SHEETS 1 AND 2, AND NO. WTP-P-22401. PROJECT DRAWING NUMBERS 24590-101-TSA-W000-0010-08-03 AND 24590-101-TSA-W000-0010-07-03.
2. PFD DRAWING 24590-HLW-M5-V17T-P0002, "HLW VITRIFICATION MELTER 1 (HMP SYSTEM)".

PLEASE NOTE THAT SOURCE, SPECIAL NUCLEAR AND BYPRODUCT MATERIALS, AS DEFINED IN THE ATOMIC ENERGY ACT OF 1954 (AEA), ARE REGULATED AT THE U.S. DEPARTMENT OF ENERGY (DOE) FACILITIES EXCLUSIVELY BY DOE ACTING PURSUANT TO ITS AEA AUTHORITY. DOE ASSERTS, THAT PURSUANT TO THE AEA, IT HAS SOLE AND EXCLUSIVE RESPONSIBILITY AND AUTHORITY TO REGULATE SOURCE, SPECIAL NUCLEAR, AND BYPRODUCT MATERIAL AT DOE-OWNED NUCLEAR FACILITIES. INFORMATION CONTAINED HEREIN ON RADIONUCLIDES IS PROVIDED FOR PROCESS DESCRIPTION PURPOSES ONLY.

REV	DESCRIPTION	ORG	CHKD	RVWD	APVD	DATE
0	ISSUED FOR PERMITTING USE	RSP	PREEH	JS	NJA	5/2/06

REVISION HISTORY

Q
QUALITY DESIGNATOR

ISSUED BY: BNFP-WTP PDC
ISSUE STAMP

PROJECT No.	24590	
SITE	HANFORD	
AREA	200E	
BUILDING No.	30	

	BY	DATE
ORIGINATOR	Richard Peterson	5-2-06
CHECKER	Esther for E. Hall	5/2/06
APPROVER	N.K. Jackson	5/2/06
REVIEWER	[illegible]	5/2/06

CONTENT APPLICABLE TO ALARA? [X] YES [ ] NO
ADR NO. NA REV:
SAFETY SCREEN REQUIRED? [ ] YES [X] NO EMS INITIAL IF YES

STATE OF WASHINGTON
ERIC B. ISERN
33449
REGISTERED
PROFESSIONAL ENGINEER
5/2/06
EXPIRES: 01/28/07

BECHTEL

RIVER PROTECTION PROJECT
WASTE TREATMENT PLANT
2435 STEVENS CENTER PLACE
RICHLAND, WA 99354

CONTRACT No: DE-AC27-01RV14136

P&ID - HLW
MELTER PROCESS SYSTEM
HLW MELTER 1
COOLING SYSTEM

SCALE: NONE

24590-HLW-M6-HMP-P0014

REV 0

FORM E_SDN.DGN 02/2003

SAFETY SCREEN IS REQUIRED FOR DRAWING TYPES IDENTIFIED IN 24590-WTP-GPP-SREQ-002

'E' SIZE - 44x34
COMPUTER GENERATED - MANUAL CHANGES NOT PERMITTED

R10874457

05/02/2006 11:09:54 AM

PLOTTED BY: eewells
C:\Work\dms05070\HLW\M6\HMP\P0014.dgn

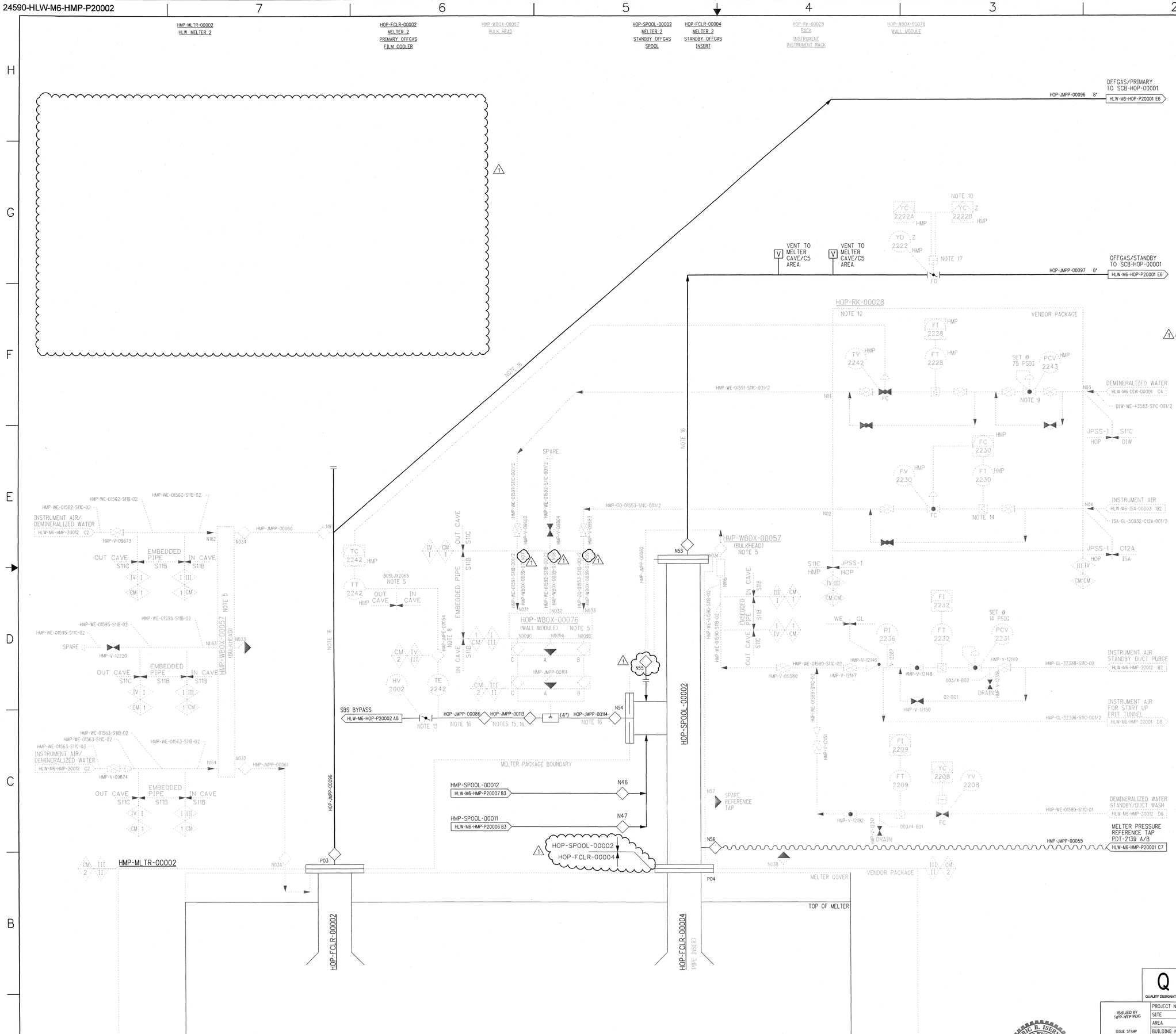

NOTES:

THE FOLLOWING NOTES ARE GENERAL NOTES FOR HMP SYSTEM.

1. SEE DRAWINGS 24590-WTP-M6-50-P0001 THROUGH 24590-WTP-M6-50-P0006 FOR GENERAL NOTES, SYMBOLS AND LEGEND.
2. JPSS-1 SPECIFICATION IS DEFINED IN INSTRUMENT PIPING MATERIAL CLASS SPEC NO. 24590-WTP-3PS-JXF0-T0001, SPECIFICATION CHANGE ALSO DEFINES AREA OF RESPONSIBILITY.
3. LOCATE OUT CAVE ISOLATION VALVES AS CLOSE AS POSSIBLE TO IN CAVE-OUT CAVE BOUNDARY.
4. PROCESS JUMPERS ARE COMMERCIAL QUALITY AND SEISMIC CATEGORY III EXCEPT AS INDICATED.
5. JOGGLED PENETRATIONS AND WALL MODULES INCLUDING INTERNAL PIPING ARE QUALITY LEVEL 1 AND SEISMIC CATEGORY I. BULKHEAD STRUCTURES ARE QUALITY LEVEL 2 AND SEISMIC CATEGORY II. SERVICE PIPING WITHIN THE BULKHEAD IS COMMERCIAL GRADE AND SEISMIC CATEGORY III.
6. THE REQUIRED BATCH SEQUENCES, PERMISSIVES, INTERLOCKS, ALARMS AND OPERATOR INTERFACE POINTS FOR THE HMP SYSTEM ARE DESCRIBED IN THE SOFTWARE FUNCTIONAL SPECIFICATION 24590-HLW-3PS-HMP-T0001.
7. FOR ITS PERMISSIVES AND INTERLOCKS, REFER TO SAFETY SYSTEM REQUIREMENT SPECIFICATIONS 24590-HLW-3PS-PPJ-T0008 AND 24590-HLW-3PS-PPJ-T0009 (TO BE ISSUED).
8. FOR ELECTRICAL JUMPERS, REFER TO SYSTEM BLOCK DIAGRAMS 24590-HLW-J1-HMP-00011 THROUGH 00020.

THE FOLLOWING NOTES ARE SPECIFIC TO THIS DRAWING.

9. RACK MOUNTED PRESSURE REGULATOR (PCV) PROVIDED WITH AN INTEGRAL PRESSURE INDICATOR.
10. PLANT PROTECTION SYSTEM (PPS) INTERLOCK WITH HIGH MELTER PLENUM PRESSURE, 24590-HLW-M6-HMP-20012.
11. (DELETED)
12. THE REQUIRED BATCH SEQUENCES, PERMISSIVES, INTERLOCKS, ALARM AND OPERATOR INTERFACE POINTS FOR THE HOP SYSTEM ARE DESCRIBED IN THE SOFTWARE FUNCTIONAL SPECIFICATION 24590-HLW-3PS-HOP-T0001.
13. LOCATE TO ALLOW NUT RUNNER OPERATION VIA OVERHEAD CRANE. BUTTERFLY VALVE TO BE BUBBLE TIGHT.
14. AIR SUPPLY IS RATIO CONTROLLED TO WATER SUPPLY.
15. HOP-JMPP-00113 IS AN AIR COOLING CHAMBER AND REQUIRES MINIMUM VOLUME OF 7 CUBIC FEET.
16. OFFGAS JUMPERS ARE QUALITY LEVEL 2 AND SEISMIC CATEGORY III.
17. PNEUMATIC ACTUATOR IS IN CAVE. REFER TO P&ID 24590-HLW-M6-ISA-00008 FOR PNEUMATIC LINE WALL PENETRATION DETAILS.
18. DELETED.
19. CONTENTS OF THIS DOCUMENT ARE DANGEROUS WASTE PERMIT AFFECTING.
20. THE PORTIONS OF THIS DRAWING SHOWN IN PHANTOM ARE CONSIDERED NON-PERMIT AFFECTING AND ARE NOT SUBJECT TO THE REGULATORY REQUIREMENTS OF THE WAC CODE FOR THE DANGEROUS WASTE PERMIT TO THE EXTENT THAT THOSE PORTIONS DO NOT IMPACT DANGEROUS WASTE AREAS/OPERATIONS.
21. REVISION 1 CHANGES INCLUDE RENUMBERING JOGGLE NOZZLES. DELETED JUMPERS AND ASSOCIATED VALVES AND LINES. CHANGES TO BOLDING. DELETED NOTE 11.

HOLD/OPEN ITEMS:

1. DELETED.
2. DELETED.

REFERENCES:

1. DURATEK DRAWING NO. WTP-P-24009 OR PROJECT DWG NO. 24590-101-TSA-W000-0010-07-11.
2. PFD DRAWING 24590-HLW-M5-V17T-P20002, "HLW VITRIFICATION MELTER 2 (HMP SYSTEM)".
3. P&ID NUMBER 24590-HLW-M6-HOP-P20001, "NEW MELTER 2 PRIMARY OFFGAS SCRUBBER".

PLEASE NOTE THAT SOURCE, SPECIAL NUCLEAR AND BYPRODUCT MATERIALS, AS DEFINED IN THE ATOMIC ENERGY ACT OF 1954 (AEA), ARE REGULATED AT THE U.S. DEPARTMENT OF ENERGY (DOE) FACILITIES EXCLUSIVELY BY DOE ACTING PURSUANT TO ITS AEA AUTHORITY. DOE ASSERTS, THAT PURSUANT TO THE AEA, IT HAS SOLE AND EXCLUSIVE RESPONSIBILITY AND AUTHORITY TO REGULATE SOURCE, SPECIAL NUCLEAR, AND BYPRODUCT MATERIAL AT DOE-OWNED NUCLEAR FACILITIES. INFORMATION CONTAINED HEREIN ON RADIONUCLIDES IS PROVIDED FOR PROCESS DESCRIPTION PURPOSES ONLY.

REV	DESCRIPTION	ORG	CHKD	RVWD	APVD	DATE
1	REVISED PER NOTE 21	RDP	RR	EI	TV	5/1/06
0	ISSUED FOR PERMITTING USE	RDP	RR	EI	TV	4/11/05

REVISION HISTORY

Q
QUALITY DESIGNATOR

ISSUED BY TWP-WTP PDC
ISSUE STAMP

PROJECT No.	24590	
SITE	HANFORD	
AREA	200E	
BUILDING No.	30	

	BY	DATE
ORIGINATOR	RICHARD PETERS	4/11/05
CHECKER	RONDA RUSSELL	4/11/05
APPROVER	TOM VALENTINO	4/11/05
REVIEWER	E ISERN	4/11/05

CONTENT APPLICABLE TO ALARA? [X] YES [ ] NO
ADR NO. NA REV:
SAFETY SCREEN REQUIRED? [ ] YES [X] NO EANS INITIAL IF YES ____

BECHTEL

RIVER PROTECTION PROJECT
WASTE TREATMENT PLANT
2435 STEVENS CENTER PLACE
RICHLAND, WA 99354

CONTRACT No: DE-AC27-01RV14136

P&ID - HLW MELTER 2 SYSTEM FILM COOLER AND OFFGAS CONNECTION

SCALE: NONE

24590-HLW-M6-HMP-P20002

REV 1

ERIC B. ISERN
STATE OF WASHINGTON
33449
REGISTERED PROFESSIONAL ENGINEER
5/1/06
EXPIRES: 07/28/06

SAFETY SCREEN IS REQUIRED FOR DRAWING TYPES IDENTIFIED IN 24590-WTP-GPP-SREQ-002

"E" SIZE - 44x34
COMPUTER GENERATED - MANUAL CHANGES NOT PERMITTED

R10674459

04/28/2006 02:13:53 PM

PLOTTED BY: eewebb
C:\Work\Grid50\TOV\HLW\M6\HMP\P20002.dgn

FORM E_SDN.DGN 02/2003

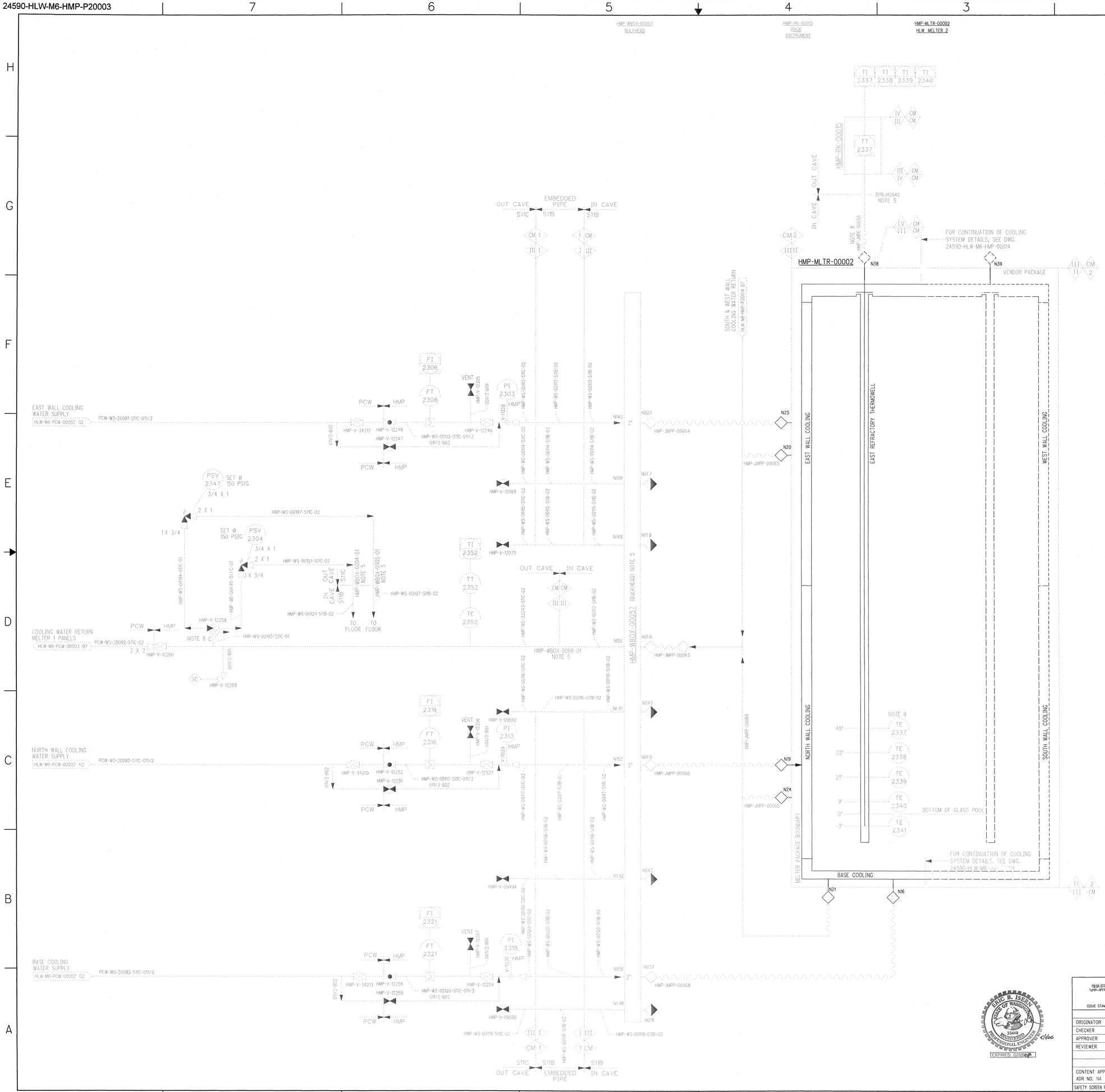

NOTES:

THE FOLLOWING NOTES ARE GENERAL NOTES FOR HMP SYSTEM.

1. SEE DRAWINGS 24590-WTP-M6-50-P0001 THROUGH 24590-WTP-M6-50-P0006 FOR GENERAL NOTES, SYMBOLS AND LEGEND.
2. JPSS-1 SPECIFICATION IS DEFINED IN INSTRUMENT PIPING MATERIAL CLASS SPEC NO. 24590-WTP-3PS-JXFO-T0001. SPECIFICATION CHANGE ALSO DEFINES AREA OF RESPONSIBILITY.
3. LOCATE OUT CAVE ISOLATION VALVES AS CLOSE AS POSSIBLE TO IN CAVE-OUT CAVE BOUNDARY.
4. PROCESS JUMPERS ARE COMMERCIAL QUALITY AND SEISMIC CATEGORY III EXCEPT AS INDICATED.
5. JOGGLED PENETRATIONS AND WALL MODULES INCLUDING INTERNAL PIPING ARE QUALITY LEVEL 1 AND SEISMIC CATEGORY I. BULKHEAD STRUCTURES ARE QUALITY LEVEL 2 AND SEISMIC CATEGORY II. SERVICE PIPING WITHIN THE BULKHEAD IS COMMERCIAL GRADE AND SEISMIC CATEGORY III.
6. THE REQUIRED BATCH SEQUENCES, PERMISSIVES, INTERLOCKS, ALARMS AND OPERATOR INTERFACE POINTS FOR THE HMP SYSTEM ARE DESCRIBED IN THE SOFTWARE FUNCTIONAL SPECIFICATION 24590-HLW-3PS-HMP-T0001.
7. FOR ITS PERMISSIVES AND INTERLOCKS, REFER TO SAFETY SYSTEM REQUIREMENT SPECIFICATIONS 24590-HLW-3PS-PPJ-T0008 AND 24590-HLW-3PS-PPJ-T0009 (TO BE ISSUED).
8. FOR ELECTRICAL JUMPERS, REFER TO SYSTEM BLOCK DIAGRAMS 24590-HLW-J1-HMP-00011 THROUGH 00020.

THE FOLLOWING NOTES ARE SPECIFIC TO THIS DRAWING.

9. REFRACTORY THERMOCOUPLE LOCATIONS RELATIVE TO BOTTOM OF GLASS POOL.
10. DELETED.
11. CONTENTS OF THIS DOCUMENT ARE DANGEROUS WASTE PERMIT AFFECTING.
12. THE PORTIONS OF THIS DRAWING SHOWN IN PHANTOM ARE CONSIDERED NON-PERMIT AFFECTING AND ARE NOT SUBJECT TO THE REGULATORY REQUIREMENTS OF THE WAC CODE FOR THE DANGEROUS WASTE PERMIT TO THE EXTENT THAT THOSE PORTIONS DO NOT IMPACT DANGEROUS WASTE AREAS/OPERATIONS.

REFERENCES:

1. DURATEK DRAWING NO. WTP-P-24004 SHEETS 1 AND 2, AND NO. WTP-P-22401. PROJECT DRAWING NUMBERS 24590-101-TSA-W000-0010-07-08 & 24590-101-TSA-W000-0010-07-03.
2. PFD DRAWING 24590-HLW-M5-V17T-P0002, "HLW VITRIFICATION MELTER 1 (HMP SYSTEM)".

PLEASE NOTE THAT SOURCE, SPECIAL NUCLEAR AND BYPRODUCT MATERIALS, AS DEFINED IN THE ATOMIC ENERGY ACT OF 1954 (AEA), ARE REGULATED AT THE U.S. DEPARTMENT OF ENERGY (DOE) FACILITIES EXCLUSIVELY BY DOE ACTING PURSUANT TO ITS AEA AUTHORITY. DOE ASSERTS, THAT PURSUANT TO THE AEA, IT HAS SOLE AND EXCLUSIVE RESPONSIBILITY AND AUTHORITY TO REGULATE SOURCE, SPECIAL NUCLEAR, AND BYPRODUCT MATERIAL AT DOE-OWNED NUCLEAR FACILITIES. INFORMATION CONTAINED HEREIN ON RADIONUCLIDES IS PROVIDED FOR PROCESS DESCRIPTION PURPOSES ONLY.

Q
QUALITY DESIGNATOR

REVISION HISTORY

REV	DESCRIPTION	ORG	CHKD	RVWD	APVD	DATE
0	ISSUED FOR PERMITTING USE	RDP				5/1/06

ISSUED BY: RPP-WTP PDC
ISSUE STAMP

PROJECT No.	24590	
SITE	HANFORD	
AREA	200E	
BUILDING No.	30	
	BY	DATE
ORIGINATOR	Richard Peters	5-1-06
CHECKER		5/1/06
APPROVER		5/1/06
REVIEWER		5-1-06

CONTENT APPLICABLE TO ALARA? [X] YES [ ] NO
ADR NO. NA REV:
SAFETY SCREEN REQUIRED? [ ] YES [X] NO EANS INITIAL IF YES ____

ERIC B. ISERN, STATE OF WASHINGTON, 33449 REGISTERED PROFESSIONAL ENGINEER
EXPIRES: 07/28/06

RIVER PROTECTION PROJECT
WASTE TREATMENT PLANT
2435 STEVENS CENTER PLACE
RICHLAND, WA 99354

CONTRACT No: DE-AC27-01RV14136

P&ID - HLW MELTER PROCESS SYSTEM HLW MELTER 2 COOLING SYSTEM

SCALE: NONE
24590-HLW-M6-HMP-P20003
REV 0

SAFETY SCREEN IS REQUIRED FOR DRAWING TYPES IDENTIFIED IN 24590-WTP-GPP-SREG-002

'E' SIZE - 44x34
COMPUTER GENERATED - MANUAL CHANGES NOT PERMITTED

R10874460

04/28/2006 02:43:18 PM

PLOTTED BY: eewebb
C:\Work\Dms0570\VE\M6\HMPP20003.dgn

FORM E_SDNLDGN 02/2003

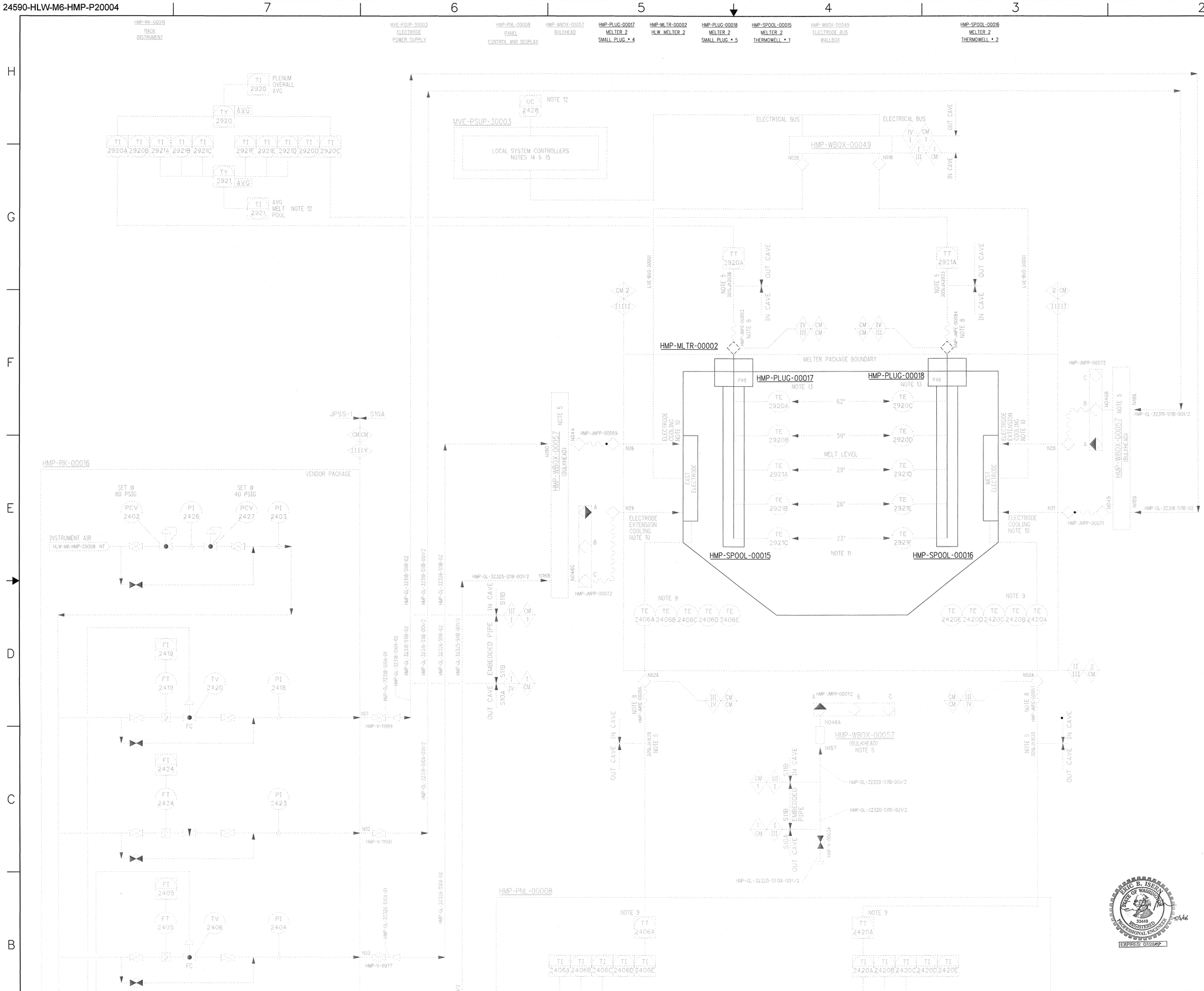

NOTES:

THE FOLLOWING NOTES ARE GENERAL NOTES FOR HMP SYSTEM.

1. SEE DRAWINGS 24590-WTP-M6-50-P0001 THROUGH 24590-WTP-M6-50-P0006 FOR GENERAL NOTES, SYMBOLS AND LEGEND.
2. JPSS-1 SPECIFICATION IS DEFINED IN INSTRUMENT PIPING MATERIAL CLASS SPEC NO. 24590-WTP-3PS-JXFO-T0001. SPECIFICATION CHANGE ALSO DEFINES AREA OF RESPONSIBILITY.
3. LOCATE OUT CAVE ISOLATION VALVES AS CLOSE AS POSSIBLE TO IN CAVE-OUT CAVE BOUNDARY.
4. PROCESS JUMPERS ARE COMMERCIAL QUALITY AND SEISMIC CATEGORY III EXCEPT AS INDICATED.
5. JOGGLED PENETRATIONS AND WALL MODULES INCLUDING INTERNAL PIPING ARE QUALITY LEVEL 1 AND SEISMIC CATEGORY I. BULKHEAD STRUCTURES ARE QUALITY LEVEL 2 AND SEISMIC CATEGORY II. SERVICE PIPING WITHIN THE BULKHEAD IS COMMERCIAL GRADE AND SEISMIC CATEGORY III.
6. THE REQUIRED BATCH SEQUENCES, PERMISSIVES, INTERLOCKS, ALARMS AND OPERATOR INTERFACE POINTS FOR THE HMP SYSTEM ARE FULLY DESCRIBED IN THE SOFTWARE FUNCTIONAL SPECIFICATION 24590-HLW-3PS-HMP-T0001.
7. FOR ITS PERMISSIVES AND INTERLOCKS, REFER TO SAFETY SYSTEM REQUIREMENT SPECIFICATIONS 24590-HLW-3PS-PPJ-T0008 AND 24590-HLW-3PS-PPJ-T0009 (TO BE ISSUED).
8. FOR ELECTRICAL JUMPERS, REFER TO SYSTEM BLOCK DIAGRAMS 24590-HLW-J1-HMP-00011 THROUGH 00020.

THE FOLLOWING NOTES ARE SPECIFIC TO THIS DRAWING.

9. FIVE POINT THERMOCOUPLE ASSEMBLY, AVERAGE OF THREE POINTS IS USED FOR ELECTRODE TEMPERATURE CONTROL INPUT. TWO POINTS ARE USED FOR ELECTRODE AND EXTENSION EXHAUST TEMPERATURE ALARM AT HIGH AND LOW TEMPERATURE.
10. COOLING AIR FOR ELECTRODE AND ELECTRODE EXTENSION EXHAUSTS TO CAVE.
11. DISTANCE OF TEMPERATURE ELEMENTS FROM BOTTOM OF MELT POOL.
12. POWER SUPPLY OPERATION IS INITIATED AND OPERATIONAL STATUS IS MONITORED FROM THE FACILITY CONTROL SYSTEM. JOULE HEATER POWER SUPPLY CONTROL SIGNAL ORIGINATES FROM MELTER AVERAGE GLASS POOL TEMPERATURE. JOULE HEATER POWER SUPPLY OUTPUT VOLTAGE, CURRENT, POWER AND FAULT DIAGNOSTICS ARE MONITORED BY THE CONTROL SYSTEM.
13. PLUGS ARE ALTERNATE INSERTS FOR MELTER PORTS.
14. POWER SUPPLY UNIT CONTROLS INCLUDED IN CONTROL DESCRIPTION 24590-CM-HC4-EBB0-00001-04-00037. POWER SUPPLY MAY BE OPERATED IN "LOCAL" OR "REMOTE" MODE. WHEN IN "LOCAL" MODE, LOSS OF SIGNAL TO POWER SUPPLY FROM FACILITY CONTROL SYSTEM RESULTS IN DEFAULT TO LOCAL SET POINT. WHEN IN "REMOTE" MODE, LOSS OF SIGNAL TO POWER SUPPLY FROM FACILITY CONTROL SYSTEM RESULTS IN DEFAULT TO LAST OUTPUT VALVE
15. FOR POWER SUPPLY SINGLE LINE DIAGRAM REFERENCE DWG. 24590-HLW-E1-LVE-10001.
16. DELETED.
17. CONTENTS OF THIS DOCUMENT ARE DANGEROUS WASTE PERMIT AFFECTING.
18. THE PORTIONS OF THIS DRAWING SHOWN IN PHANTOM ARE CONSIDERED NON-PERMIT AFFECTING AND ARE NOT SUBJECT TO THE REGULATORY REQUIREMENTS OF THE WAC CODE FOR THE DANGEROUS WASTE PERMIT TO THE EXTENT THAT THOSE PORTIONS DO NOT IMPACT DANGEROUS WASTE AREAS/OPERATIONS.

REFERENCES:

1. DURATEK DRAWING NO. WTP-P-24008. PROJECT DRAWING NO. 24590-101-TSA-W000-0010-07-10.
2. PFD DRAWING 24590-HLW-M5-V17T-P0002, "HLW VITRIFICATION MELTER 1 (SYSTEM HMP)".

ERIC B. ISELEN — STATE OF WASHINGTON — 33449 — REGISTERED PROFESSIONAL ENGINEER — 5/2/06 — EXPIRES: 07/20/06

PLEASE NOTE THAT SOURCE, SPECIAL NUCLEAR AND BYPRODUCT MATERIALS, AS DEFINED IN THE ATOMIC ENERGY ACT OF 1954 (AEA), ARE REGULATED AT THE U.S. DEPARTMENT OF ENERGY (DOE) FACILITIES EXCLUSIVELY BY DOE ACTING PURSUANT TO ITS AEA AUTHORITY. DOE ASSERTS, THAT PURSUANT TO THE AEA, IT HAS SOLE AND EXCLUSIVE RESPONSIBILITY AND AUTHORITY TO REGULATE SOURCE, SPECIAL NUCLEAR, AND BYPRODUCT MATERIAL AT DOE-OWNED NUCLEAR FACILITIES. INFORMATION CONTAINED HEREIN ON RADIONUCLIDES IS PROVIDED FOR PROCESS DESCRIPTION PURPOSES ONLY.

Q — QUALITY DESIGNATOR

REVISION HISTORY

REV	DESCRIPTION	ORG	CHKD	RVWD	APVD	DATE
0	ISSUED FOR PERMITTING USE	RDP				5/2/06

ISSUED BY: TSPP-WTP PDC

ISSUE STAMP

PROJECT No.	24590
SITE	HANFORD
AREA	200E
BUILDING No.	30

BECHTEL

RIVER PROTECTION PROJECT
WASTE TREATMENT PLANT
2435 STEVENS CENTER PLACE
RICHLAND, WA 99354

CONTRACT No: DE-AC27-01RV14136

	BY	DATE
ORIGINATOR	Raymond Peterson	5-2-06
CHECKER	FOR E. HAN	5/2/06
APPROVER		5/2/06
REVIEWER		5/2/06

CONTENT APPLICABLE TO ALARA? [X] YES [ ] NO
ADR NO. NA REV:
SAFETY SCREEN REQUIRED? [ ] YES [X] NO EMS INITIAL IF YES

P&ID - HLW MELTER 2 ELECTRODE AIR COOLING AND JOULE HEATING

SCALE: NONE

24590-HLW-M6-HMP-P20004

REV 0

SAFETY SCREEN IS REQUIRED FOR DRAWING TYPES IDENTIFIED IN 24590-WTP-GPP-SREQ-002

"E" SIZE - 44x34
COMPUTER GENERATED - MANUAL CHANGES NOT PERMITTED

R10674461

05/02/2006 11:31:57 AM

PLOTTED BY: eeweb
C:\Work\dms30070\HLW\M6\HMP\P20004.dgn

FORM E_SDN.DGN 02/2003

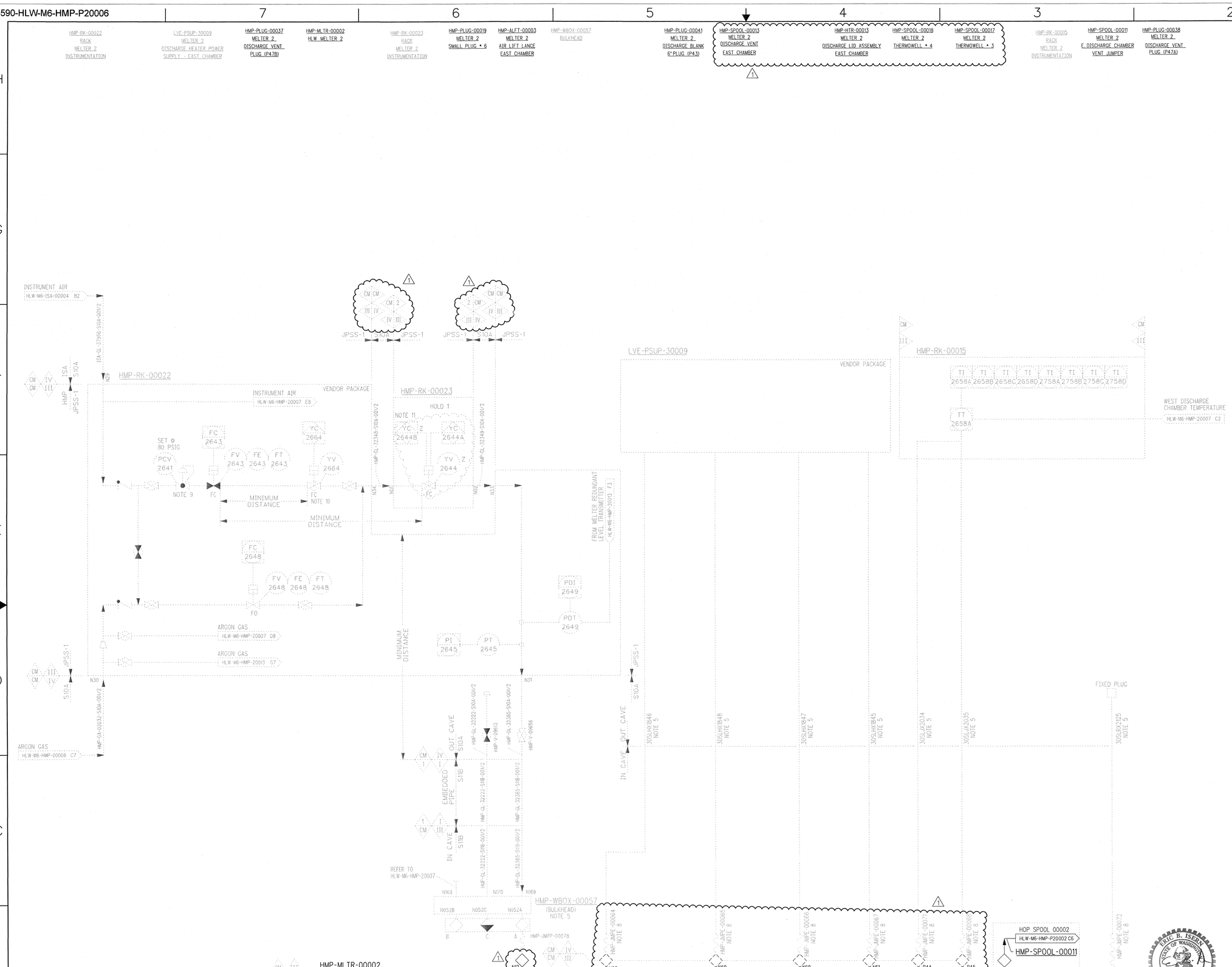

NOTES:

THE FOLLOWING NOTES ARE GENERAL NOTES FOR HMP SYSTEM.

1. SEE DRAWINGS 24590-WTP-M6-50-P0001 THROUGH 24590-WTP-M6-50-P0006 FOR GENERAL NOTES, SYMBOLS AND LEGEND.
2. JPSS-1 SPECIFICATION IS DEFINED IN INSTRUMENT PIPING MATERIAL CLASS SPEC NO. 24590-WTP-3PS-JXF0-T0001. SPECIFICATION CHANGE ALSO DEFINES AREA OF RESPONSIBILITY.
3. LOCATE OUT CAVE ISOLATION VALVES AS CLOSE AS POSSIBLE TO IN CAVE-OUT CAVE BOUNDARY.
4. PROCESS JUMPERS ARE COMMERCIAL QUALITY AND SEISMIC CATEGORY III EXCEPT AS INDICATED.
5. JOGGLED PENETRATIONS AND WALL MODULES INCLUDING INTERNAL PIPING ARE QUALITY LEVEL 1 AND SEISMIC CATEGORY I. BULKHEAD STRUCTURES ARE QUALITY LEVEL 2 AND SEISMIC CATEGORY II. SERVICE PIPING WITHIN THE BULKHEAD IS COMMERCIAL GRADE AND SEISMIC CATEGORY III.
6. THE REQUIRED BATCH SEQUENCES, PERMISSIVES, INTERLOCKS, ALARMS AND OPERATOR INTERFACE POINTS FOR THE HMP SYSTEM ARE DESCRIBED IN THE SOFTWARE FUNCTIONAL SPECIFICATION 24590-HLW-3PS-HMP-T0001.
7. FOR ITS PERMISSIVES AND INTERLOCKS, REFER TO SAFETY SYSTEM REQUIREMENT SPECIFICATIONS 24590-HLW-3PS-PPJ-T0008 AND 24590-HLW-3PS-PPJ-T0009 (TO BE ISSUED).
8. FOR ELECTRICAL JUMPERS, REFER TO SYSTEM BLOCK DIAGRAMS 24590-HLW-J1-HMP-00011 THROUGH 00020.

THE FOLLOWING NOTES ARE SPECIFIC TO THIS DRAWING.

9. RACK MOUNTED PRESSURE REGULATORS (PCV) ARE PROVIDED WITH AN INTEGRAL PRESSURE INDICATOR.
10. ANGLE BODY PISTON VALVE CONSISTING OF A VALVE BODY, VALVE ACTUATOR AND PILOT SOLENOID.
11. AIRLIFT FLOW INTERLOCKED HIGH-HIGH CANISTER LEVEL DETECTION.
12. DISCHARGE AUXILIARY HEATER PRE-WIRED FOR FUTURE USE. HEATERS RATED AT 4KW, 208 VOLTS AND SINGLE PHASE.
13. ELECTRICAL JUMPERS SHOWN ON DISCHARGE HEATER SINGLE LINE DRAWING NUMBER 24590-HLW-E1-LVE-10004.
14. FOR DISCHARGE HEATERS CONFIGURATION REFER TO 24590-HLW-E1-LVE-10004 AND 24590-HLW-J0-HMP-20006.
15. PLUGS ARE ALTERNATE INSERTS FOR MELTER PORTS.
16. DELETED.
17. CONTENTS OF THIS DOCUMENT ARE DANGEROUS WASTE PERMIT AFFECTING.
18. THE PORTIONS OF THIS DRAWING SHOWN IN PHANTOM ARE CONSIDERED NON-PERMIT AFFECTING AND ARE NOT SUBJECT TO THE REGULATORY REQUIREMENTS OF THE WAC CODE FOR THE DANGEROUS WASTE PERMIT TO THE EXTENT THAT THOSE PORTIONS DO NOT IMPACT DANGEROUS WASTE AREAS/OPERATIONS.
19. REVISION 1 INCLUDES ADDITION OF SEISMIC AND QUALITY FLAGS AND ADDITIONAL BOLDING.

HOLD/OPEN ITEMS:

1. THE IDENTIFIED ITEMS ARE NOT RELEASED FOR PROCUREMENT OR CONSTRUCTION ACTIVITIES UNTIL APPROVAL OF ABAR 24590-WTP-SE-ENS-04-0117, UNLESS SPECIFICALLY AUTHORIZED UNDER 10 CFR 830.206.

REFERENCES:

1. DURATEK DRAWING WTP-P-24003 SHEETS 4, 5, AND 6 OR PROJECT DWG. NO. 24590-101-TSA-W000-0010-07-07.
2. PFD DRAWING NO. 24590-HLW-M5-V17T-P20002, "HLW VITRIFICATION MELTER 2 (HMP SYSTEM)".

PLEASE NOTE THAT SOURCE, SPECIAL NUCLEAR AND BYPRODUCT MATERIALS, AS DEFINED IN THE ATOMIC ENERGY ACT OF 1954 (AEA), ARE REGULATED AT THE U.S. DEPARTMENT OF ENERGY (DOE) FACILITIES EXCLUSIVELY BY DOE ACTING PURSUANT TO ITS AEA AUTHORITY. DOE ASSERTS, THAT PURSUANT TO THE AEA, IT HAS SOLE AND EXCLUSIVE RESPONSIBILITY AND AUTHORITY TO REGULATE SOURCE, SPECIAL NUCLEAR, AND BYPRODUCT MATERIAL AT DOE-OWNED NUCLEAR FACILITIES. INFORMATION CONTAINED HEREIN ON RADIONUCLIDES IS PROVIDED FOR PROCESS DESCRIPTION PURPOSES ONLY.

ERIC B. ISERN — STATE OF WASHINGTON — 33449 — REGISTERED PROFESSIONAL ENGINEER — 5/1/06 — EXPIRES: 07/28/06

Q — QUALITY DESIGNATOR

REV	DESCRIPTION	ORG	CHKD	RVWD	APVD	DATE
1	REVISED PER NOTE 19	RDP				5/1/06
0	ISSUED FOR PERMITTING USE	RDP	RR	EI	TV	4/11/05

REVISION HISTORY

ISSUED BY: TWP-WTP PDC
ISSUE STAMP

PROJECT No.	24590	
SITE	HANFORD	
AREA	200E	
BUILDING No.	30	

	BY	DATE
ORIGINATOR	RICHARD PETERS	4/11-05
CHECKER	RONSA RUSSELL	4/11-05
APPROVER	T VALENTINO	4/11/05
REVIEWER	E ISERN	4/11/05

CONTENT APPLICABLE TO ALARA? [X] YES [ ] NO
ADR NO. NA REV:
SAFETY SCREEN REQUIRED? [ ] YES [X] NO EMS INITIAL IF YES ____

BECHTEL

RIVER PROTECTION PROJECT
WASTE TREATMENT PLANT
2435 STEVENS CENTER PLACE
RICHLAND, WA 99354

CONTRACT No: DE-AC27-01RV14136

P&ID - HLW MELTER 2 SYSTEM EAST DISCHARGE HEATERS AND AIRLIFT

SCALE: NONE

24590-HLW-M6-HMP-P20006 REV 1

SAFETY SCREEN IS REQUIRED FOR DRAWING TYPES IDENTIFIED IN 24590-WTP-QPP-SREG-002

E' SIZE - 44x34
COMPUTER GENERATED - MANUAL CHANGES NOT PERMITTED

R10874462 04/28/2006 02:24:43 PM

PLOTTED BY: wmchaney
C:\Work\dms0607\DWL\M6\HMP\P20006.dgn

FORM E_SDN.DGN 02/2003

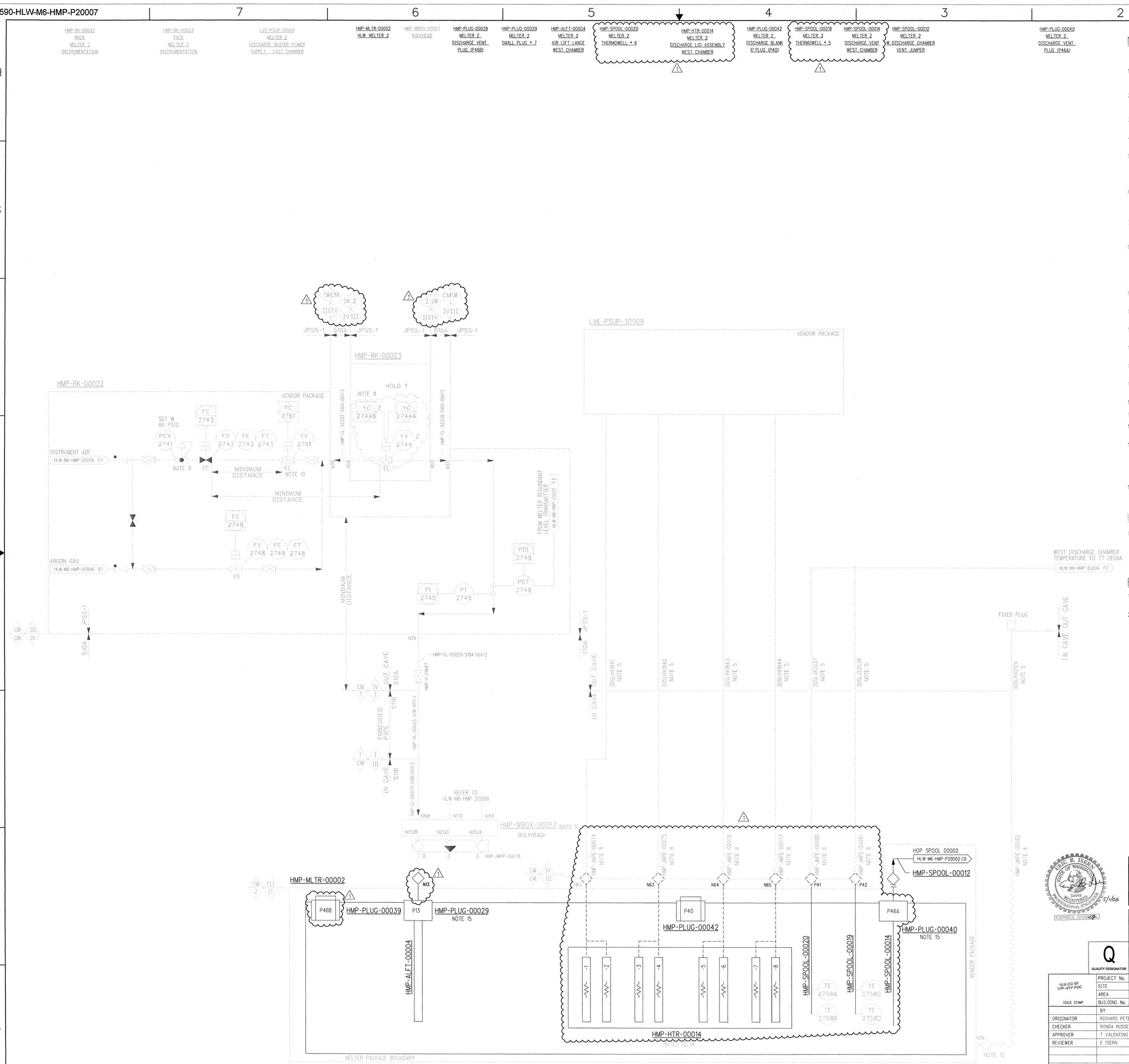

NOTES:

THE FOLLOWING NOTES ARE GENERAL NOTES FOR HMP SYSTEM.

1. SEE DRAWINGS 24590-WTP-M6-50-P0001 THROUGH 24590-WTP-M6-50-P0006 FOR GENERAL NOTES, SYMBOLS AND LEGEND.
2. JPSS-1 SPECIFICATION IS DEFINED IN INSTRUMENT PIPING MATERIAL CLASS SPEC NO. 24590-WTP-3PS-JXF0-T0001. SPECIFICATION CHANGE ALSO DEFINES AREA OF RESPONSIBILITY.
3. LOCATE OUT CAVE ISOLATION VALVES AS CLOSE AS POSSIBLE TO IN CAVE-OUT CAVE BOUNDARY.
4. PROCESS JUMPERS ARE COMMERCIAL QUALITY AND SEISMIC CATEGORY III EXCEPT AS INDICATED.
5. JOGGLED PENETRATIONS AND WALL MODULES INCLUDING INTERNAL PIPING ARE QUALITY LEVEL 1 AND SEISMIC CATEGORY I. BULKHEAD STRUCTURES ARE QUALITY LEVEL 2 AND SEISMIC CATEGORY II. SERVICE PIPING WITHIN THE BULKHEAD IS COMMERCIAL GRADE AND SEISMIC CATEGORY III.
6. THE REQUIRED BATCH SEQUENCES, PERMISSIVES, INTERLOCKS, ALARMS AND OPERATOR INTERFACE POINTS FOR THE HMP SYSTEM ARE DESCRIBED IN THE SOFTWARE FUNCTIONAL SPECIFICATION 24590-HLW-3PS-HMP-T0001.
7. FOR ITS PERMISSIVES AND INTERLOCKS, REFER TO SAFETY SYSTEM REQUIREMENT SPECIFICATIONS 24590-HLW-3PS-PPJ-T0008 AND 24590-HLW-3PS-PPJ-T0009 (TO BE ISSUED).
8. FOR ELECTRICAL JUMPERS, REFER TO SYSTEM BLOCK DIAGRAMS 24590-HLW-J1-HMP-00011 THROUGH 00020.

THE FOLLOWING NOTES ARE SPECIFIC TO THIS DRAWING.

9. RACK MOUNTED PRESSURE REGULATORS (PCV) ARE PROVIDED WITH AN INTEGRAL PRESSURE INDICATOR.
10. ANGLE BODY PISTON VALVE CONSISTING OF A VALVE BODY, VALVE ACTUATOR AND PILOT SOLENOID.
11. AIRLIFT AIR FLOW INTERLOCK WITH HIGH-HIGH CANISTER LEVEL DETECTION.
12. DISCHARGE AUXILIARY HEATER PRE-WIRED FOR FUTURE USE. HEATERS RATED 4KW, 208 VOLTS AND 1 PHASE.
13. ELECTRICAL JUMPERS SHOWN ON DISCHARGE HEATER SINGLE LINE DRAWING NUMBER 24590-HLW-E1-LVE-10004.
14. FOR DISCHARGE HEATERS CONFIGURATION, REFER TO 24590-HLW-E1-LVE-10004 AND 24590-HLW-J0-HMP-20007.
15. PLUGS ARE ALTERNATE INSERTS FOR MELTER PORTS.
16. DELETED.
17. CONTENT OF THE DOCUMENT ARE DANGEROUS WASTE PERMIT AFFECTING.
18. THE PORTIONS OF THIS DRAWING SHOWN IN PHANTOM ARE CONSIDERED NON-PERMIT AFFECTING AND ARE NOT SUBJECT TO THE REGULATORY REQUIREMENTS OF THE WAC CODE FOR THE DANGEROUS WASTE PERMIT TO THE EXTENT THAT THOSE PORTIONS DO NOT IMPACT DANGEROUS WASTE AREA/OPERATIONS.
19. REVISION 1 INCLUDE CHANGES TO BOLDING AND SEISMIC AND QUALITY FLAGS.

HOLD/OPEN ITEMS:

1. THE IDENTIFIED ITEMS ARE NOT RELEASED FOR PROCUREMENT OR CONSTRUCTION ACTIVITIES UNTIL APPROVAL OF ABAR 24590-WTP-SE-ENS-04-0117, UNLESS SPECIFICALLY AUTHORIZED UNDER 10 CFR 830.206.

REFERENCES:

1. DURATEK DRAWING WTP-P-24003 SHEETS 4, 5, AND 6 OR PROJECT DWG. NO. 24590-101-TSA-W000-0010-07-07.
2. PFD DRAWING NO. 24590-HLW-M5-V17T-P20002, "HLW VITRIFICATION MELTER 2 (HMP SYSTEM)".

PLEASE NOTE THAT SOURCE, SPECIAL NUCLEAR AND BYPRODUCT MATERIALS, AS DEFINED IN THE ATOMIC ENERGY ACT OF 1954 (AEA), ARE REGULATED AT THE U.S. DEPARTMENT OF ENERGY (DOE) FACILITIES EXCLUSIVELY BY DOE ACTING PURSUANT TO ITS AEA AUTHORITY. DOE ASSERTS, THAT PURSUANT TO THE AEA, IT HAS SOLE AND EXCLUSIVE RESPONSIBILITY AND AUTHORITY TO REGULATE SOURCE, SPECIAL NUCLEAR, AND BYPRODUCT MATERIAL AT DOE-OWNED NUCLEAR FACILITIES. INFORMATION CONTAINED HEREIN ON RADIONUCLIDES IS PROVIDED FOR PROCESS DESCRIPTION PURPOSES ONLY.

ERIC B. ISERN — STATE OF WASHINGTON — 33449 — REGISTERED PROFESSIONAL ENGINEER — 5/1/06 — EXPIRES: 07/28/06

REV	DESCRIPTION	ORG	CHKD	RVWD	APVD	DATE
1	REVISED PER NOTE 19	RDP	RR	EI	TV	5/1/06
0	ISSUED FOR PERMITTING USE	RDP	RR	EI	TV	4/11/05

REVISION HISTORY

Q — QUALITY DESIGNATOR

ISSUED BY RPP-WTP PDC — ISSUE STAMP

PROJECT No.	24590	
SITE	HANFORD	
AREA	200E	
BUILDING No.	30	

	BY	DATE
ORIGINATOR	RICHARD PETERS	4/11/05
CHECKER	RONDA RUSSELL	4/11/05
APPROVER	T VALENTINO	4/11/05
REVIEWER	E ISERN	4/11/05

CONTENT APPLICABLE TO ALARA? [X] YES [ ] NO
ADR NO. NA REV:
SAFETY SCREEN REQUIRED? [ ] YES [X] NO EMIS INITIAL IF YES

BECHTEL

RIVER PROTECTION PROJECT
WASTE TREATMENT PLANT
2435 STEVENS CENTER PLACE
RICHLAND, WA 99354

CONTRACT No: DE-AC27-01RV14136

P&ID - HLW MELTER 2 SYSTEM WEST DISCHARGE HEATERS AND AIRLIFT

SCALE: NONE

24590-HLW-M6-HMP-P20007

REV 1

SAFETY SCREEN IS REQUIRED FOR DRAWING TYPES IDENTIFIED IN 24590-WTP-GPP-SREG-002

"E" SIZE - 44x34 COMPUTER GENERATED - MANUAL CHANGES NOT PERMITTED

R10674463

04/28/2006 02:21:47 PM

P:\O TED BY: emtrovey
P:\Work\Jobs\20010\HLW\M6\HMP\P20007.dgn

FORM E_SDN.DGN 02/2003

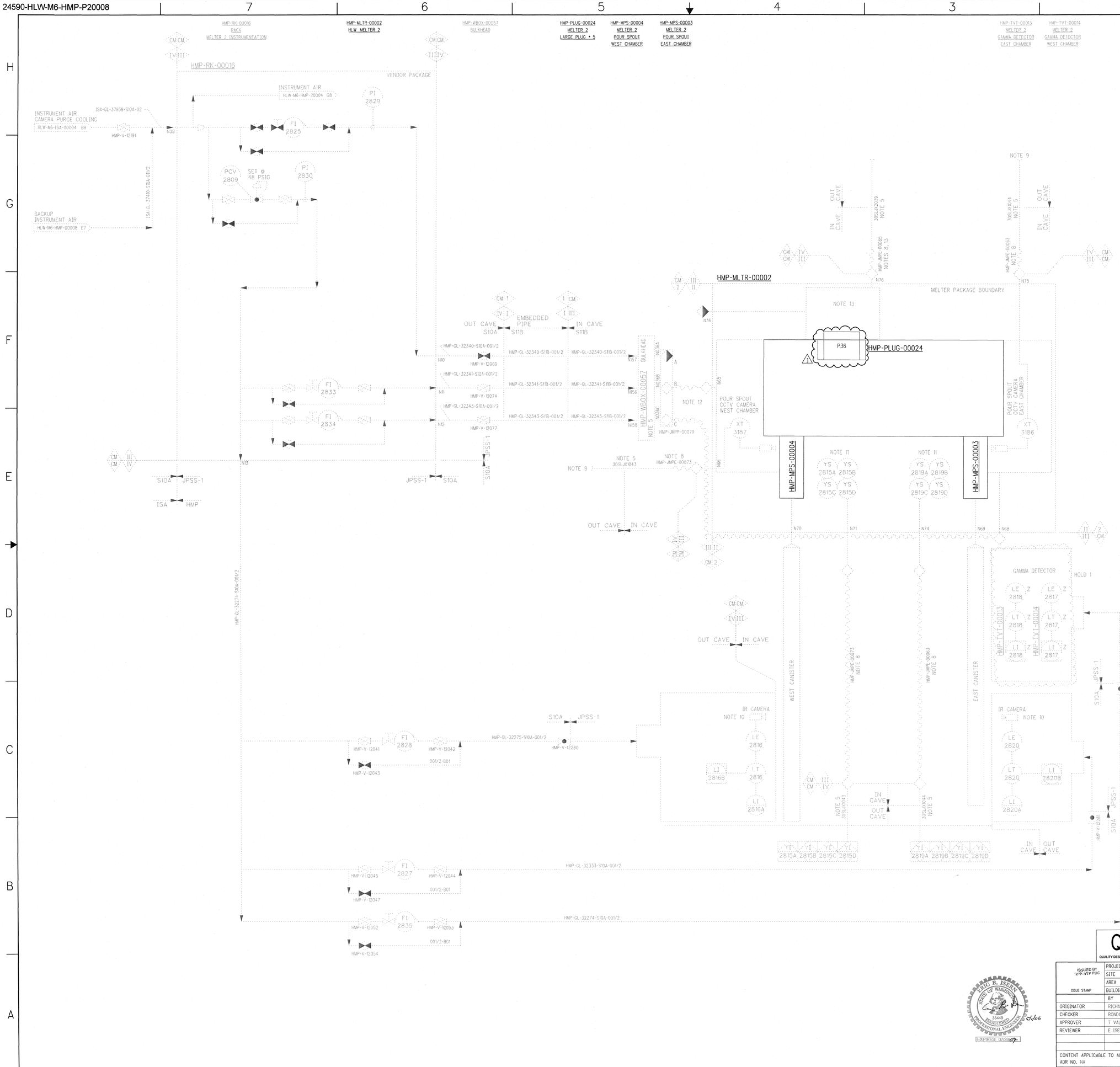

NOTES:

THE FOLLOWING NOTES ARE GENERAL NOTES FOR HMP SYSTEM.

1. SEE DRAWINGS 24590-WTP-M6-50-P0001 THROUGH 24590-WTP-M6-50-P0006 FOR GENERAL NOTES, SYMBOLS AND LEGEND.
2. JPSS-1 SPECIFICATION IS DEFINED IN INSTRUMENT PIPING MATERIAL CLASS SPEC NO. 24590-WTP-3PS-JXFO-T0001. SPECIFICATION CHANGE ALSO DEFINES AREA OF RESPONSIBILITY.
3. LOCATE OUT CAVE ISOLATION VALVES AS CLOSE AS POSSIBLE TO IN CAVE-OUT CAVE BOUNDARY.
4. PROCESS JUMPERS ARE COMMERCIAL QUALITY AND SEISMIC CATEGORY III EXCEPT AS INDICATED.
5. JOGGLED PENETRATIONS AND WALL MODULES INCLUDING INTERNAL PIPING ARE QUALITY LEVEL 1 AND SEISMIC CATEGORY I. BULKHEAD STRUCTURES ARE QUALITY LEVEL 2 AND SEISMIC CATEGORY II. SERVICE PIPING WITHIN THE BULKHEAD IS COMMERCIAL GRADE AND SEISMIC CATEGORY III.
6. THE REQUIRED BATCH SEQUENCES, PERMISSIVES, INTERLOCKS, ALARMS AND OPERATOR INTERFACE POINTS FOR THE HMP SYSTEM ARE DESCRIBED IN THE SOFTWARE FUNCTIONAL SPECIFICATION 24590-HLW-3PS-HMP-T0001.
7. FOR ITS PERMISSIVES AND INTERLOCKS, REFER TO SAFETY SYSTEM REQUIREMENT SPECIFICATIONS 24590-HLW-3PS-PPJ-T0008 AND 24590-HLW-3PS-PPJ-T0009 (TO BE ISSUED).
8. FOR ELECTRICAL JUMPERS, REFER TO SYSTEM BLOCK DIAGRAMS 24590-HLW-J1-HMP-00011 THROUGH 00020.

THE FOLLOWING NOTES ARE SPECIFIC TO THIS DRAWING.

9. CCTV CAMERA POWER/VIDEO/CONTROL CABLES TO CONNECT TO PTJ SYSTEM ENCLOSURE.
10. EAST AND WEST IR CAMERA MOUNTED IN THE CANISTER POUR TUNNEL THROUGH WALL LINERS.
11. DRIP PAN POSITION SWITCHES DETECT PRESENCE AND POSITION OF PRODUCT CANISTER.
12. AIR CONNECTION INCLUDES SUPPLY FOR POUR SPOUT CAMERAS AND DRIP TRAY AIR CYLINDERS. DRIP TRAY IS PART OF VENDOR PACKAGE.
13. FUTURE INSTALLATION.
14. DELETED.
15. CONTENTS OF THIS DOCUMENT ARE DANGEROUS WASTE PERMIT AFFECTING.
16. THE PORTIONS OF THIS DRAWING SHOWN IN PHANTOM ARE CONSIDERED NON-PERMIT AFFECTING AND ARE NOT SUBJECT TO THE REGULATORY REQUIREMENTS OF THE WAC CODE FOR THE DANGEROUS WASTE PERMIT TO THE EXTENT THAT THOSE PORTIONS DO NOT IMPACT DANGEROUS WASTE AREAS/OPERATIONS.
17. REVISION 1 CHANGES INCLUDE ADDED BOLDING.

HOLD/OPEN ITEMS:

1. THE IDENTIFIED ITEMS ARE NOT RELEASED FOR PROCUREMENT OR CONSTRUCTION ACTIVITIES UNTIL APPROVAL OF ABAR 24590-WTP-SE-ENS-04-0117, UNLESS SPECIFICALLY AUTHORIZED UNDER 10 CFR 830.206.

REFERENCE:

1. DURATEK DRAWING NO. WTP-P-24010 SHEET 1 OF PROJECT NO. 24590-101-TSA-W000-0010-07-12.
2. PFD DRAWING 24590-HLW-M5-V17T-P20002, "HLW VITRIFICATION MELTER 2 (HMP SYSTEM)".
3. DRAWING NO. 24590-HLW-MO-HMP-00137, "HLW VITRIFICATION SYSTEM HMP, DESIGN PROPOSAL DRAWING, POUR TUNNEL 1 & 2 INFRARED AND GAMMA CANISTER LEVEL DETECTION SYSTEM".

PLEASE NOTE THAT SOURCE, SPECIAL NUCLEAR AND BYPRODUCT MATERIALS, AS DEFINED IN THE ATOMIC ENERGY ACT OF 1954 (AEA), ARE REGULATED AT THE U.S. DEPARTMENT OF ENERGY (DOE) FACILITIES EXCLUSIVELY BY DOE ACTING PURSUANT TO ITS AEA AUTHORITY. DOE ASSERTS, THAT PURSUANT TO THE AEA, IT HAS SOLE AND EXCLUSIVE RESPONSIBILITY AND AUTHORITY TO REGULATE SOURCE, SPECIAL NUCLEAR, AND BYPRODUCT MATERIAL AT DOE-OWNED NUCLEAR FACILITIES. INFORMATION CONTAINED HEREIN ON RADIONUCLIDES IS PROVIDED FOR PROCESS DESCRIPTION PURPOSES ONLY.

Q
QUALITY DESIGNATOR

REV	DESCRIPTION	ORG	CHKD	RVWD	APVD	DATE
1	ISSUED PER NOTE 17	RDP	RR	EI	TV	5/1/06
0	ISSUED FOR PERMITTING USE	RDP	RR	EI	TV	4/11/05

REVISION HISTORY

ISSUED BY: 12PR-WTP PDC
ISSUE STAMP

PROJECT No.	24590	
SITE	HANFORD	
AREA	200E	
BUILDING No.	30	
	BY	DATE
ORIGINATOR	RICHARD PETERS	4/11/05
CHECKER	RONDA RUSSELL	4/11/05
APPROVER	T VALENTINO	4/11/05
REVIEWER	E ISERN	4/11/05

ERIC B. ISERN, STATE OF WASHINGTON, 33449, REGISTERED PROFESSIONAL ENGINEER, 5/1/06
EXPIRES: 07/28/07

CONTENT APPLICABLE TO ALARA? [X] YES [ ] NO
ADR NO. NA REV:
SAFETY SCREEN REQUIRED? [ ] YES [X] NO EMS INITIAL IF YES ____

BECHTEL

RIVER PROTECTION PROJECT
WASTE TREATMENT PLANT
2435 STEVENS CENTER PLACE
RICHLAND, WA 99354

CONTRACT No: DE-AC27-01RV14136

P&ID - HLW MELTER PROCESS SYSTEM MELTER 2 GLASS POUR & MONITORING INSTRUMENTATION

SCALE: NONE
24590-HLW-M6-HMP-P20008
REV 1

SAFETY SCREEN IS REQUIRED FOR DRAWING TYPES IDENTIFIED IN 24590-WTP-GPP-SEQ-002

'E' SIZE - 44x34
COMPUTER GENERATED - MANUAL CHANGES NOT PERMITTED

R10874464

04/28/2006 02:38:13 PM

PLOTTED BY: emcnab
C:\Work_tmp\05070\HLW\M6\HMP\P20008.dgn

FORM E_SDN.DGN 02/2003

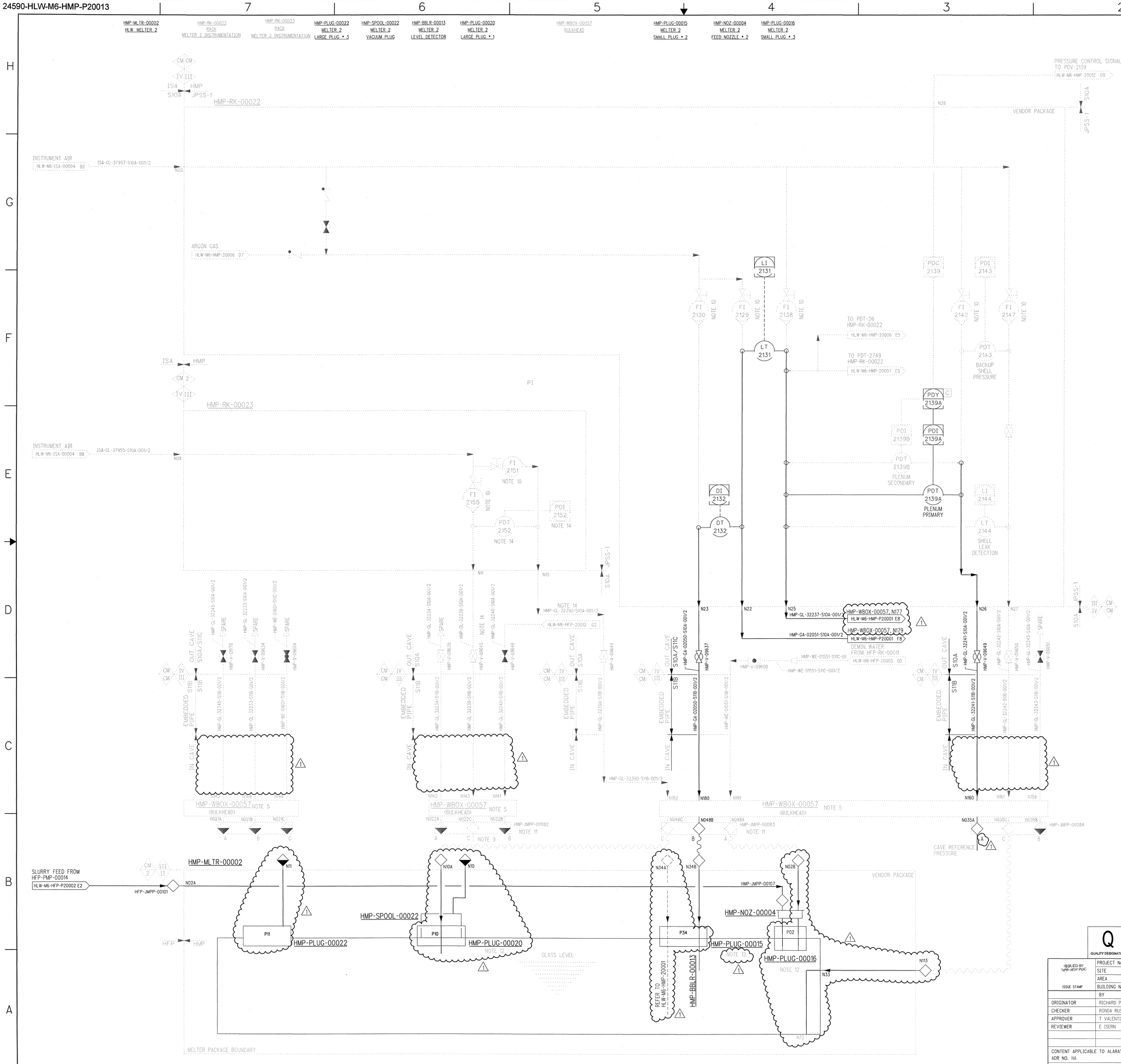

NOTES:

THE FOLLOWING NOTES ARE GENERAL NOTES FOR HMP SYSTEM.

1. SEE DRAWINGS 24590-WTP-M6-50-P0001 THROUGH 24590-WTP-M6-50-P0006 FOR GENERAL NOTES, SYMBOLS AND LEGEND.
2. JPSS-1 SPECIFICATION IS DEFINED IN INSTRUMENT PIPING MATERIAL CLASS SPEC NO. 24590-WTP-3PS-JXFO-T0001. SPECIFICATION CHANGE ALSO DEFINES AREA OF RESPONSIBILITY.
3. LOCATE OUT CAVE ISOLATION VALVES AS CLOSE AS POSSIBLE TO IN CAVE-OUT CAVE BOUNDARY.
4. PROCESS JUMPERS ARE COMMERCIAL QUALITY AND SEISMIC CATEGORY III EXCEPT AS INDICATED.
5. JOGGLED PENETRATIONS AND WALL MODULES INCLUDING INTERNAL PIPING ARE QUALITY LEVEL 1 AND SEISMIC CATEGORY I. BULKHEAD STRUCTURES ARE QUALITY LEVEL 2 AND SEISMIC CATEGORY II. SERVICE PIPING WITHIN THE BULKHEAD IS COMMERCIAL GRADE AND SEISMIC CATEGORY III.
6. THE REQUIRED BATCH SEQUENCES, PERMISSIVES, INTERLOCKS, ALARMS AND OPERATOR INTERFACE POINTS FOR THE HMP SYSTEM ARE DESCRIBED IN THE SOFTWARE FUNCTIONAL SPECIFICATION 24590-HLW-3PS-HMP-T0001.
7. FOR ITS PERMISSIVES AND INTERLOCKS, REFER TO SAFETY SYSTEM REQUIREMENT SPECIFICATIONS 24590-HLW-3PS-PPJ-T0008 AND 24590-HLW-3PS-PPJ-T0009 (TO BE ISSUED).
8. FOR ELECTRICAL JUMPERS, REFER TO SYSTEM BLOCK DIAGRAMS 24590-HLW-J1-HMP-00011 THROUGH 00020.

THE FOLLOWING NOTES ARE SPECIFIC TO THIS DRAWING.

9. CAVE REFERENCE PRESSURE FOR ITS PRESSURE SENSOR.
10. VARIABLE AREA FLOW METER WITH INTEGRAL FLOW CONTROL VALVE AND PRESSURE REGULATOR.
11. JUMPER IS QUALITY LEVEL 2 AND SEISMIC CATEGORY III.
12. PLUGS ARE ALTERNATE INSERTS TO MELTER PORTS.
13. DELETED.
14. CONENTS OF THIS DOCUMENT ARE DANGEROUS WASTE PERMIT AFFECTING.
15. THE PORTIONS OF THIS DRAWING SHOWN IN PHANTOM ARE CONSIDERED NON-PERMIT AFFECTING AND ARE NOT SUBJECT TO THE REGULATORY REQUIREMENT OF THE WAC CODE FOR THE DANGEROUS WASTE PERMIT TO THE EXTENT THAT THOSE PORTIONS DO NOT IMPACT DANGEROUS WASTE AREAS/OPERATIONS.
16. REVISION 1 CHANGES INCLUDE ADDITIONAL BOLDING. DELETED EXTRANEOUS LINE NUMBERS.

REFERENCES:

1. PFD DRAWING 24590-HLW-M5-V17T-P20002, "HLW VITRIFICATION MELTER 2 (HMP SYSTEM)".

ERIC B. ISERN — STATE OF WASHINGTON — 33449 — REGISTERED PROFESSIONAL ENGINEER — 5/1/06 — EXPIRES: 07/28/07

PLEASE NOTE THAT SOURCE, SPECIAL NUCLEAR AND BYPRODUCT MATERIALS, AS DEFINED IN THE ATOMIC ENERGY ACT OF 1954 (AEA), ARE REGULATED AT THE U.S. DEPARTMENT OF ENERGY (DOE) FACILITIES EXCLUSIVELY BY DOE ACTING PURSUANT TO ITS AEA AUTHORITY. DOE ASSERTS, THAT PURSUANT TO THE AEA, IT HAS SOLE AND EXCLUSIVE RESPONSIBILITY AND AUTHORITY TO REGULATE SOURCE, SPECIAL NUCLEAR, AND BYPRODUCT MATERIAL AT DOE-OWNED NUCLEAR FACILITIES. INFORMATION CONTAINED HEREIN ON RADIONUCLIDES IS PROVIDED FOR PROCESS DESCRIPTION PURPOSES ONLY.

Q — QUALITY DESIGNATOR

REVISION HISTORY

REV	DESCRIPTION	ORG	CHKD	RVWD	APVD	DATE
1	REVISED PER NOTE 16	RDP	RR		TV	5/1/06
0	ISSUED FOR PERMITTING USE	RDP	RR	EI	TV	4/11/05

ISSUED BY: RPP-WTP PDC

ISSUE STAMP

PROJECT No.	24590	
SITE	HANFORD	
AREA	200E	
BUILDING No.	30	
	BY	DATE
ORIGINATOR	RICHARD PETERS	4/11/05
CHECKER	RONDA RUSSELL	4/11/05
APPROVER	T VALENTINO	4/11/05
REVIEWER	E ISERN	4/11/05

CONTENT APPLICABLE TO ALARA? [X] YES [ ] NO

ADR NO. NA REV:

SAFETY SCREEN REQUIRED? [ ] YES [X] NO E&NS INITIAL IF YES

BECHTEL

RIVER PROTECTION PROJECT
WASTE TREATMENT PLANT
2435 STEVENS CENTER PLACE
RICHLAND, WA 99354

CONTRACT No: DE-AC27-01RV14136

P&ID - HLW MELTER 2 SYSTEM PRESSURE, DENSITY AND LEVEL DETECTION

SCALE: NONE

24590-HLW-M6-HMP-P20013

REV 1

SAFETY SCREEN IS REQUIRED FOR DRAWING TYPES IDENTIFIED IN 24590-WTP-GPP-SREG-002

'E' SIZE - 44x34
COMPUTER GENERATED - MANUAL CHANGES NOT PERMITTED

R10674465

04/28/2006 02:27:14 PM

PLOTTED BY: rewebb
C:\Work\dms050701\HLW\M6\HMP20013.dgn

FORM E_SDN.DGN 02/2003

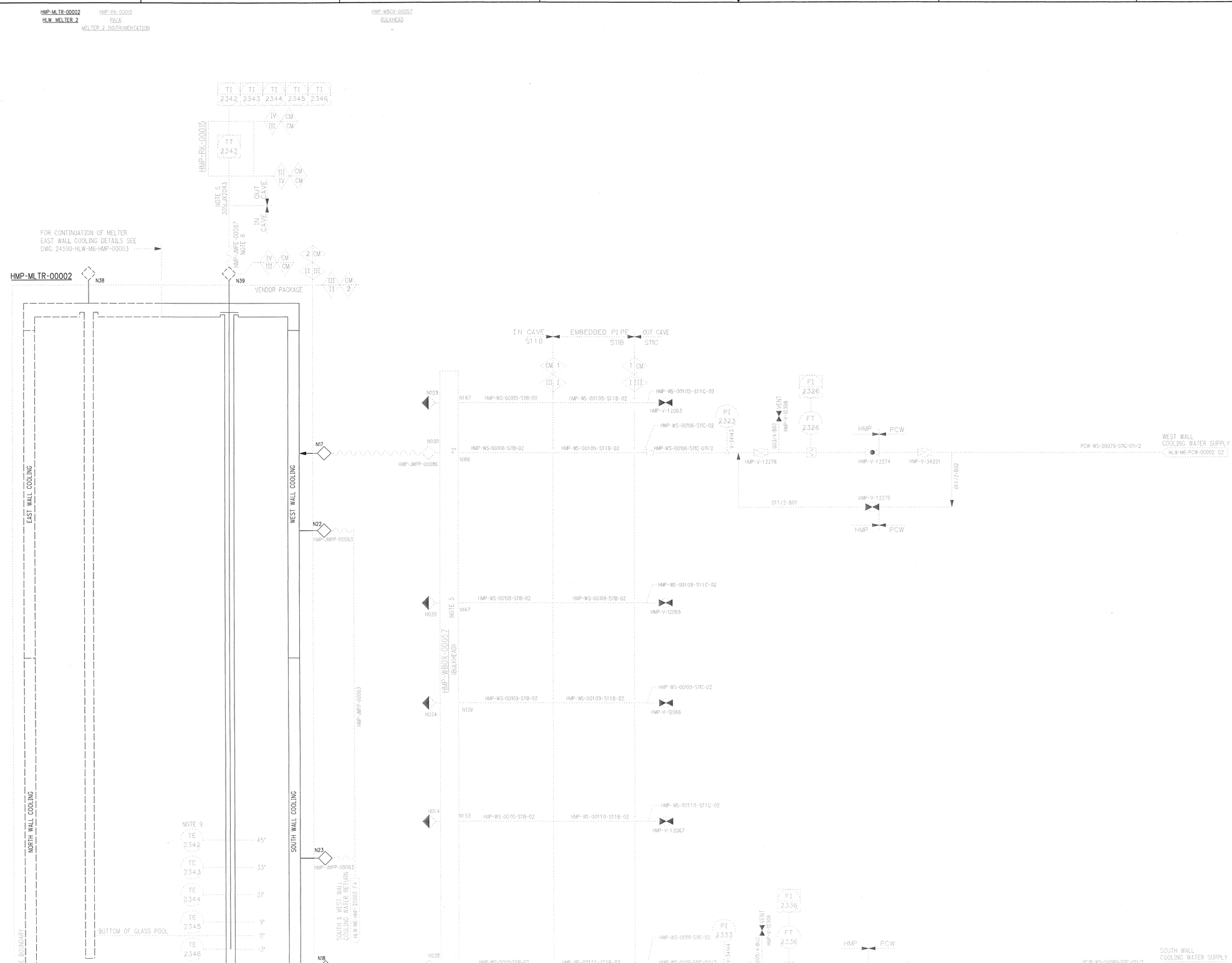

NOTES:

THE FOLLOWING NOTES ARE GENERAL NOTES FOR HMP SYSTEM.

1. SEE DRAWINGS 24590-WTP-M6-50-P0001 THROUGH 24590-WTP-M6-50-P0006 FOR GENERAL NOTES, SYMBOLS AND LEGEND.
2. JPSS-1 SPECIFICATION IS DEFINED IN INSTRUMENT PIPING MATERIAL CLASS SPEC NO. 24590-WTP-3PS-JXFO-T0001. SPECIFICATION CHANGE ALSO DEFINES AREA OF RESPONSIBILITY.
3. LOCATE OUT CAVE ISOLATION VALVES AS CLOSE AS POSSIBLE TO IN CAVE-OUT CAVE BOUNDARY.
4. PROCESS JUMPERS ARE COMMERCIAL QUALITY AND SEISMIC CATEGORY III EXCEPT AS INDICATED.
5. JOGGLED PENETRATIONS AND WALL MODULES INCLUDING INTERNAL PIPING ARE QUALITY LEVEL 1 AND SEISMIC CATEGORY I. BULKHEAD STRUCTURES ARE QUALITY LEVEL 2 AND SEISMIC CATEGORY II. SERVICE PIPING WITHIN THE BULKHEAD IS COMMERCIAL GRADE AND SEISMIC CATEGORY III.
6. THE REQUIRED BATCH SEQUENCES, PERMISSIVES, INTERLOCKS, ALARMS AND OPERATOR INTERFACE POINTS FOR THE HMP SYSTEM ARE DESCRIBED IN THE SOFTWARE FUNCTIONAL SPECIFICATION 24590-HLW-3PS-HMP-T0001.
7. FOR ITS PERMISSIVES AND INTERLOCKS, REFER TO SAFETY SYSTEM REQUIREMENT SPECIFICATIONS 24590-HLW-3PS-PPJ-T0008 AND 24590-HLW-3PS-PPJ-T0009 (TO BE ISSUED).
8. FOR ELECTRICAL JUMPERS, REFER TO SYSTEM BLOCK DIAGRAMS 24590-HLW-J1-HMP-00011 THROUGH 00020.

THE FOLLOWING NOTES ARE SPECIFIC TO THIS DRAWING.

9. REFRACTORY THERMOCOUPLE LOCATIONS RELATIVE TO BOTTOM OF GLASS POOL.
10. DELETED.
11. CONTENTS OF THIS DOCUMENT ARE DANGEROUS WASTE PERMIT AFFECTING.
12. THE PORTIONS OF THIS DRAWING SHOWN IN PHANTOM ARE CONSIDERED NON-PERMIT AFFECTING AND ARE NOT SUBJECT TO THE REGULATORY REQUIREMENTS OF THE WAC CODE FOR THE DANGEROUS WASTE PERMIT TO THE EXTENT THAT THOSE PORTIONS DO NOT IMPACT DANGEROUS WASTE AREAS/OPERATIONS.

REFERENCES:

1. DURATEK DRAWING NO. WTP-P-24004 SHEETS 1 AND 2, AND NO. WTP-P-22401. PROJECT DRAWING NUMBERS 24590-101-TSA-W000-0010-08-03 AND 24590-101-TSA-W000-0010-07-03.
2. PFD DRAWING 24590-HLW-M5-V17T-P20002, "HLW VITRIFICATION MELTER 2 (SYSTEM HMP)".

PLEASE NOTE THAT SOURCE, SPECIAL NUCLEAR AND BYPRODUCT MATERIALS, AS DEFINED IN THE ATOMIC ENERGY ACT OF 1954 (AEA), ARE REGULATED AT THE U.S. DEPARTMENT OF ENERGY (DOE) FACILITIES EXCLUSIVELY BY DOE ACTING PURSUANT TO ITS AEA AUTHORITY. DOE ASSERTS, THAT PURSUANT TO THE AEA, IT HAS SOLE AND EXCLUSIVE RESPONSIBILITY AND AUTHORITY TO REGULATE SOURCE, SPECIAL NUCLEAR, AND BYPRODUCT MATERIAL AT DOE-OWNED NUCLEAR FACILITIES. INFORMATION CONTAINED HEREIN ON RADIONUCLIDES IS PROVIDED FOR PROCESS DESCRIPTION PURPOSES ONLY.

REV	DESCRIPTION	ORG	CHKD	RVWD	APVD	DATE
0	ISSUED FOR PERMITTING USE	RDP	EH	JS		5/2/06

REVISION HISTORY

Q
QUALITY DESIGNATOR

ERIC B. ISEBIN
STATE OF WASHINGTON
33449
REGISTERED PROFESSIONAL ENGINEER
5/2/06
EXPIRES: 01/28/2007

ISSUED BY THP-WTP PDC		
ISSUE STAMP	PROJECT No.	24590
	SITE	HANFORD
	AREA	200E
	BUILDING No.	30

	BY	DATE
ORIGINATOR	Richard Peterson	5-2-06
CHECKER	For EH	5/2/06
APPROVER	JS	5/2/06
REVIEWER		5/2/06

CONTENT APPLICABLE TO ALARA? [X] YES [ ] NO
ADR NO. NA REV:
SAFETY SCREEN REQUIRED? [ ] YES [X] NO EMS INITIAL IF YES

BECHTEL

RIVER PROTECTION PROJECT
WASTE TREATMENT PLANT
2435 STEVENS CENTER PLACE
RICHLAND, WA 99354

CONTRACT No: DE-AC27-01RV14136

P&ID - HLW
MELTER PROCESS SYSTEM
HLW MELTER 2
COOLING SYSTEM

SCALE: NONE

24590-HLW-M6-HMP-P20014

REV 0

SAFETY SCREEN IS REQUIRED FOR DRAWING TYPES IDENTIFIED IN 24590-WTP-GPP-SREG-002

"E" SIZE - 44 x 34
COMPUTER GENERATED - MANUAL CHANGES NOT PERMITTED

R10874466

05/02/2006 11:13:39 AM

PLOTTED BY: eeweb
C:\Work\dms0570\HLW\M6\HMP\P20014.dgn

FORM E_SDN.DGN 02/2003

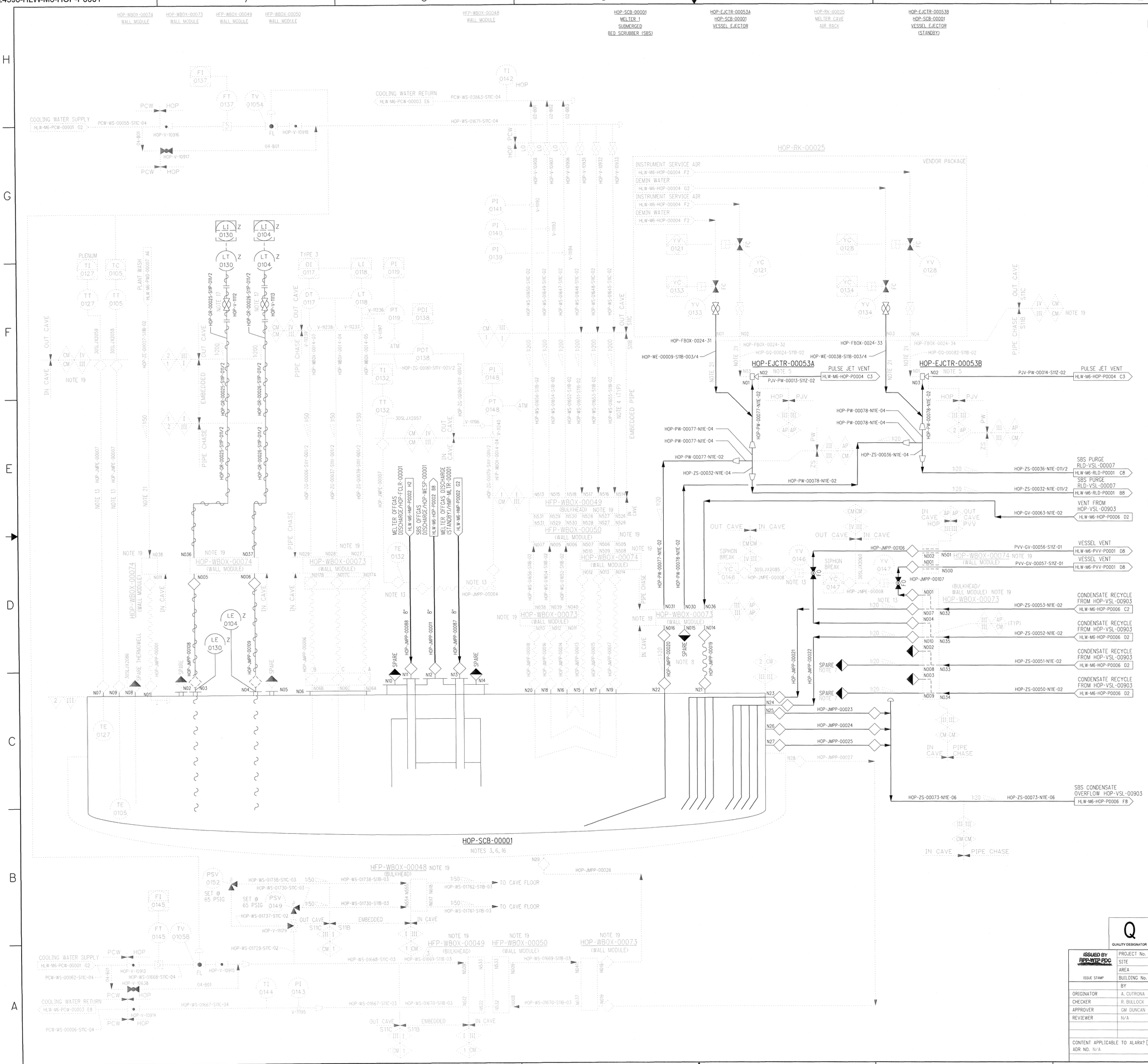

NOTES:

THE FOLLOWING NOTES ARE GENERAL NOTES FOR HOP SYSTEM.

1. SEE DRAWINGS 24590-WTP-M6-50-P0001 THROUGH 24590-WTP-M6-50-P0006 FOR GENERAL NOTES, SYMBOLS AND LEGEND.
2. DELETED.

THE FOLLOWING NOTES ARE SPECIFIC TO THIS DRAWING

3. IN VESSEL PIPE CLASS CHANGE TO N13A, HASTELLOY C-22.
4. COOLING WATER SUPPLY AND RETURN PIPES TO BE FREE DRAINING FROM OUT CAVE TO IN CAVE.
5. EJECTOR TO BE LOCATED 35' ABOVE PROCESS VESSEL OVERFLOW. EJECTOR IS QUALITY LEVEL AP AND SEISMIC CATEGORY III.
6. DELETED.
7. SPARE JUMPER CONNECTION TO HOP-SCB-00001, NOZZLE N23 OR N24.
8. SPARE JUMPER CONNECTION FOR HOP-SCB-00001, N22.
9. DELETED.
10. DELETED.
11. NOT USED.
12. DELETED.
13. DELETED.
14. NOT USED.
15. CONTENTS OF THIS DOCUMENT ARE DANGEROUS WASTE PERMIT AFFECTING.
16. VESSEL HOP-SCB-00001 IS QUALITY LEVEL 2 AND SEISMIC CATEGORY SC-II.
17. RADAR GUIDE TUBE IS TO BE ROUTED TO TRANSMITTER. A FULL PORT BALL VALVE IS REQUIRED FOR ISOLATION PURPOSES AT TRANSMITTER END OF GUIDE TUBE.
18. DELETED.
19. JOGGLED PENETRATIONS AND WALL MODULES INCLUDING INTERNAL PIPING ARE QUALITY LEVEL 1 AND SEISMIC CATEGORY I. BULKHEADS STRUCTURES ARE QUALITY LEVEL 2 AND SEISMIC CATEGORY II. SERVICE PIPING WITHIN THE BULKHEAD IS COMMERCIAL GRADE AND SEISMIC CATEGORY III.
20. THE IN CAVE PIPING IS QUALITY LEVEL 2 AND SEISMIC CATEGORY III. EMBEDDED PIPING IS QUALITY LEVEL 1 AND SEISMIC CATEGORY I.
21. THIS LINE IS QUALITY LEVEL CM AND SEISMIC CATEGORY III.
22. THE PORTIONS OF THIS DRAWING SHOWN IN PHANTOM ARE CONSIDERED NON-PERMIT AFFECTING AND ARE NOT SUBJECT TO THE REGULATORY REQUIREMENTS OF THE WAC CODE FOR THE DANGEROUS WASTE PERMIT TO THE EXTENT THAT THOSE PORTIONS DO NOT IMPACT DANGEROUS WASTE AREAS/OPERATIONS.
23. REVISED QUALITY LEVELS & SEISMIC CATEGORIES, INCORPORATED WALL MODULE DESIGN, UPDATED VALVES, UPDATED IN-CELL PIPE CLASS, AND UPDATED NOZZLE AND LINE NUMBERS.

REFERENCES:

1. 24590-HLW-M5-V17T-P0003, "PROCESS FLOW DIAGRAM, HLW VIT MELTER 1 PRIMARY OFFGAS TREATMENT" (SYSTEM HOP).

ERIC B. ISERN
STATE OF WASHINGTON
33449
REGISTERED
PROFESSIONAL ENGINEER
3/31/05
EXPIRES: 07/28/05

PLEASE NOTE THAT SOURCE, SPECIAL NUCLEAR AND BYPRODUCT MATERIALS, AS DEFINED IN THE ATOMIC ENERGY ACT OF 1954 (AEA), ARE REGULATED AT THE U.S. DEPARTMENT OF ENERGY (DOE) FACILITIES EXCLUSIVELY BY DOE ACTING PURSUANT TO ITS AEA AUTHORITY. DOE ASSERTS, THAT PURSUANT TO THE AEA, IT HAS SOLE AND EXCLUSIVE RESPONSIBILITY AND AUTHORITY TO REGULATE SOURCE, SPECIAL NUCLEAR, AND BYPRODUCT MATERIAL AT DOE-OWNED NUCLEAR FACILITIES. INFORMATION CONTAINED HEREIN ON RADIONUCLIDES IS PROVIDED FOR PROCESS DESCRIPTION PURPOSES ONLY.

Q
QUALITY DESIGNATOR

REVISION HISTORY

REV	DESCRIPTION	ORG	CHKD	RVWD	APVD	DATE
1	MAJOR REVISION SEE NOTE 23, ISSUED FOR PERMITTING USE	JM	SJC	YM	TV	3-30-05
0	ISSUED FOR PERMITTING USE	JM	YM	DTY	TV	3-31-04

ISSUED BY RPP-WTP PDC
ISSUE STAMP

PROJECT No.	24590
SITE	HANFORD
AREA	200E
BUILDING No.	30

	BY	DATE
ORIGINATOR	A. CUTRONA	10-9-02
CHECKER	R. BULLOCK	10-9-02
APPROVER	GM DUNCAN	10-10-02
REVIEWER	N/A	

CONTENT APPLICABLE TO ALARA? [X] YES [ ] NO
ADR NO: N/A REV:

BECHTEL

RIVER PROTECTION PROJECT
WASTE TREATMENT PLANT
2435 STEVENS CENTER PLACE
RICHLAND, WA 99352

CONTRACT No: DE-AC27-01RV14136

P&ID - HLW
MELTER OFFGAS SYSTEM
MELTER 1
PRIMARY OFFGAS SCRUBBER

SCALE: NONE

24590-HLW-M6-HOP-P0001

REV 1

'E' SIZE - 44x34
COMPUTER GENERATED - MANUAL CHANGES NOT PERMITTED

R10523695

03/29/2005 01:16:25 PM

PLOTTED BY eweeks
C:\Work\pns05070\HLWM6HOP0001R1.dgn

FORM E_SDN.DGN 02/2003

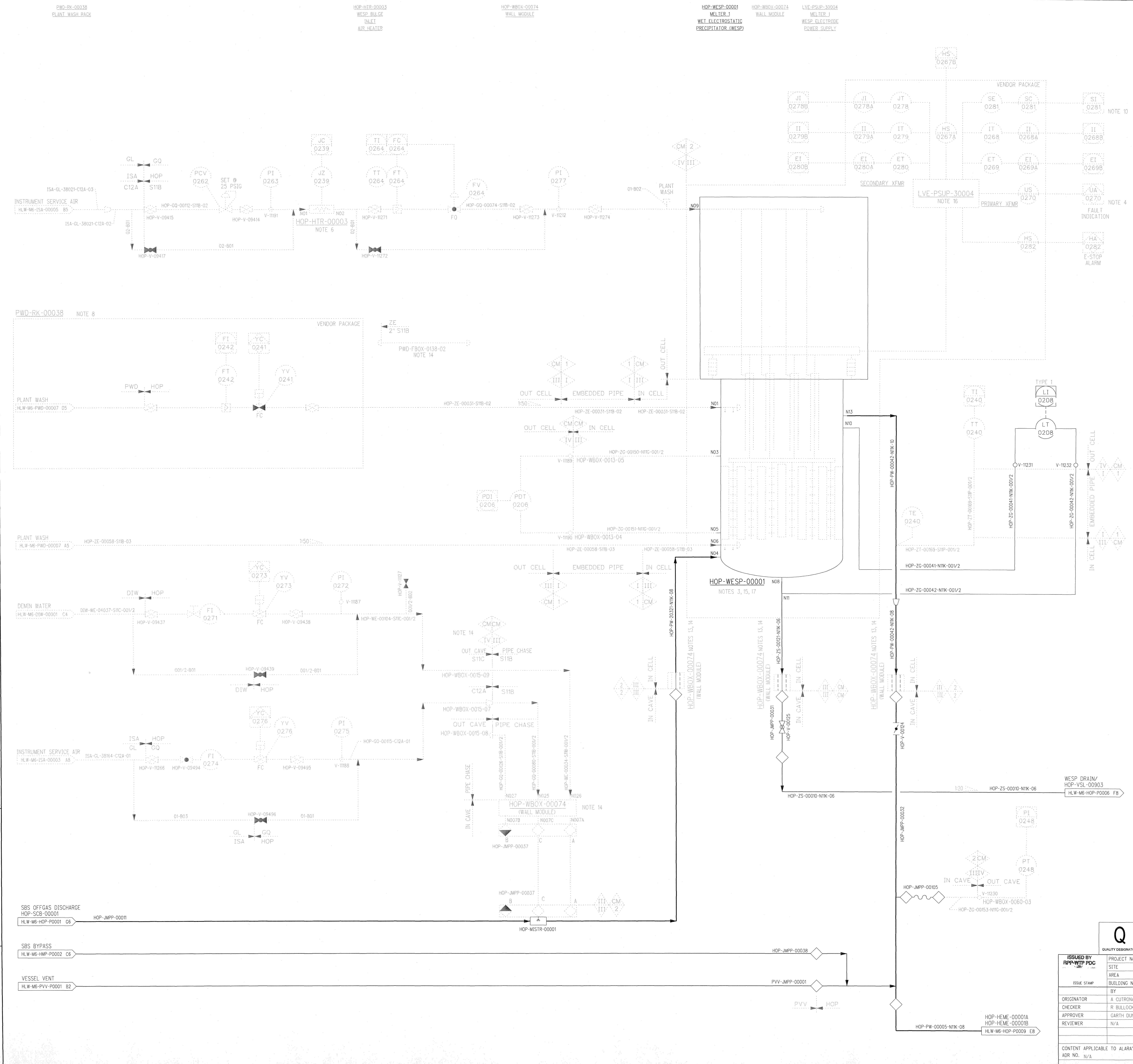

NOTES:

THE FOLLOWING NOTES ARE GENERAL NOTES FOR HOP SYSTEM.

1. SEE DRAWINGS 24590-WTP-M6-50-P0001 THROUGH 24590-WTP-M6-50-P0006 FOR GENERAL NOTES, SYMBOLS AND LEGEND.
2. DELETED.

THE FOLLOWING NOTES ARE SPECIFIC TO THIS DRAWING.

3. REFER TO ENGINEERING SPECIFICATION 24590-WTP-3PS-MV00-TP001 FOR VESSEL NOZZLE LOADS.
4. POWER CONTROLLER MALFUNCTION INDICATOR INCLUDES THE FOLLOWING ALARMS: GROUND FAULT, XFMR HIGH TEMPERATURE, HIGH OIL TEMPERATURE, HIGH OIL PRESSURE, POWER SUPPLY TRIP, SECONDARY AMPS HIGH, SECONDARY VOLTAGE LOW, SPARK RATE HIGH AND COMMUNICATION FAILURE.
5. DELETED.
6. HEATER UNIT SHALL BE EQUIPPED WITH OVER-TEMPERATURE PROTECTION (SUPPLIED BY VENDOR).
7. NOT USED.
8. DELETED.
9. CONTENTS OF THIS DOCUMENT ARE DANGEROUS WASTE PERMIT AFFECTING.
10. POWER SUPPLY SPARK RATE FREQUENCY IS AUTOMATICALLY CONTROLLED BY VENDOR CONTROLLER AND MONITORED.
11. DELETED.
12. DELETED.
13. SLEEVED PIPE IS INDICATED BY TWO DASHED LINES SURROUNDING A PIPELINE. SLOPE SLEEVE INTO CAVE WITH SAME SLOPE AS PIPELINE.
14. JOGGLED PENETRATIONS AND WALL MODULES INCLUDING INTERNAL PIPING ARE QUALITY LEVEL 1 AND SEISMIC CATEGORY I. BULKHEAD STRUCTURES ARE QUALITY LEVEL 2 AND SEISMIC CATEGORY II. SERVICE PIPING WITHIN THE BULKHEAD IS COMMERCIAL GRADE AND SEISMIC CATEGORY III.
15. INSTRUMENTATION FOR HOP-WESP-00001 ARE COMMERCIAL QUALITY AND SEISMIC CATEGORY IV. WESP VESSEL IS QUALITY LEVEL QL-2 AND SEISMIC CATEGORY SC-III.
16. THE WESP POWER SUPPLY IS QUALITY LEVEL AP AND SEISMIC CATEGORY III.
17. WESP VESSEL IS LOCATED IN ACTIVE SERVICES CELL.
18. THE PORTIONS OF THIS DRAWING SHOWN IN PHANTOM ARE CONSIDERED NON-PERMIT AFFECTING AND ARE NOT SUBJECT TO THE REGULATORY REQUIREMENTS OF THE WAC CODE FOR THE DANGEROUS WASTE PERMIT TO THE EXTENT THAT THOSE PORTIONS DO NOT IMPACT DANGEROUS WASTE AREAS/OPERATIONS.
19. REVISED QUALITY LEVELS & SEISMIC CATEGORIES, INCORPORATED WALL MODULE DESIGN, UPDATED VALVES, UPDATED UTILITIES, AND UPDATED IN-CELL PIPE CLASS.

REFERENCES:

1. 24590-HLW-M5-V17T-P0003, "PROCESS FLOW DIAGRAM, HLW VIT MELTER 1 PRIMARY OFFGAS TREATMENT" (SYSTEM HOP).

ERIC B. ISERN — STATE OF WASHINGTON — 33449 — REGISTERED PROFESSIONAL ENGINEER — 3/31/05 — EXPIRES: 07/28/05

PLEASE NOTE THAT SOURCE, SPECIAL NUCLEAR AND BYPRODUCT MATERIALS, AS DEFINED IN THE ATOMIC ENERGY ACT OF 1954 (AEA), ARE REGULATED AT THE U.S. DEPARTMENT OF ENERGY (DOE) FACILITIES EXCLUSIVELY BY DOE ACTING PURSUANT TO ITS AEA AUTHORITY. DOE ASSERTS, THAT PURSUANT TO THE AEA, IT HAS SOLE AND EXCLUSIVE RESPONSIBILITY AND AUTHORITY TO REGULATE SOURCE, SPECIAL NUCLEAR, AND BYPRODUCT MATERIAL AT DOE-OWNED NUCLEAR FACILITIES. INFORMATION CONTAINED HEREIN ON RADIONUCLIDES IS PROVIDED FOR PROCESS DESCRIPTION PURPOSES ONLY.

Q — QUALITY DESIGNATOR

REVISION HISTORY

REV	DESCRIPTION	ORG	CHKD	RVWD	APVD	DATE
1	MAJOR REVISION, SEE NOTE 19 ISSUED FOR PERMITTING USE	(initials)	SJC	(initials)	TV	3-30-05
0	ISSUED FOR PERMITTING USE	JM	YM	SJC	TV	9-1-04

ISSUED BY RPP-WTP PDC — ISSUE STAMP

PROJECT No.	24590
SITE	HANFORD
AREA	200E
BUILDING No.	30

	BY	DATE
ORIGINATOR	A CUTRONA	10-09-02
CHECKER	R BULLOCK	10-09-02
APPROVER	GARTH DUNCAN	10-10-02
REVIEWER	N/A	

CONTENT APPLICABLE TO ALARA? [X] YES [ ] NO
ADR NO. N/A REV:

RIVER PROTECTION PROJECT
WASTE TREATMENT PLANT
2435 STEVENS CENTER PLACE
RICHLAND, WA 99352

CONTRACT No: DE-AC27-01RV14136

P&ID - HLW MELTER OFFGAS SYSTEM MELTER 1 PRIMARY OFFGAS WESP

SCALE: NONE — 24590-HLW-M6-HOP-P0002 — REV 1

'E' SIZE - 44x34
COMPUTER GENERATED - MANUAL CHANGES NOT PERMITTED

R10523695 03/29/2005 01:18:01 PM

FORM E_SDN.DGN 02/2003

PLOTTED BY: eewebb
C:\Work\dms05070\HLWM6HOPP0002r1.dgn

24590-HLW-M6-HOP-P0003

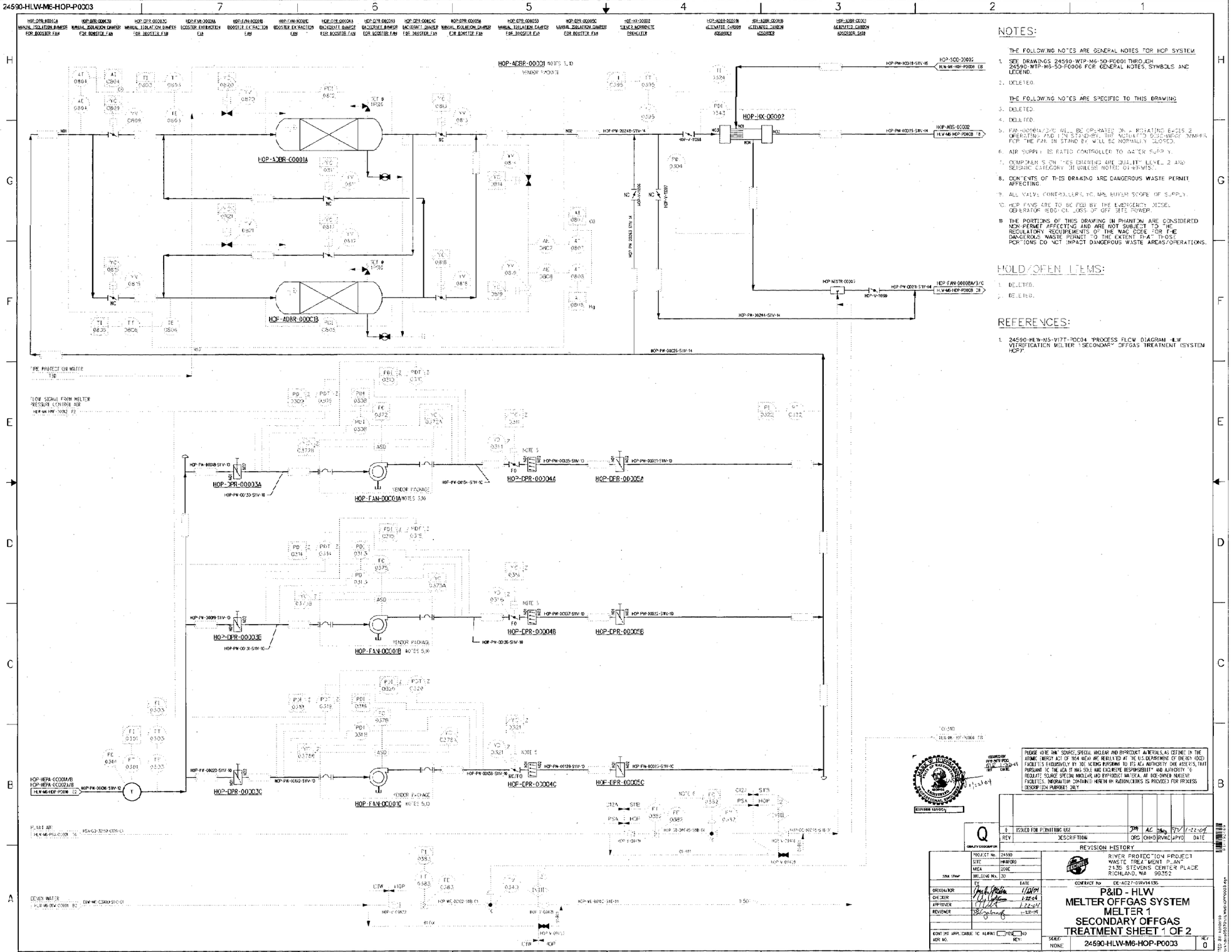

NOTES:

THE FOLLOWING NOTES ARE GENERAL NOTES FOR HOP SYSTEM

1. SEE DRAWINGS 24590-WTP-M6-50-P0001 THROUGH 24590-WTP-M6-50-P0006 FOR GENERAL NOTES, SYMBOLS AND LEGEND.
2. DELETED.

THE FOLLOWING NOTES ARE SPECIFIC TO THIS DRAWING

3. DELETED.
4. DELETED.
5. FAN-00001A/100% WILL BE OPERATED ON A ROTATING BASIS 2 OPERATING AND 1 IN STAND-BY. THE NORMALLY DISCHARGE DAMPER FOR THE FAN IN STAND BY WILL BE NORMALLY CLOSED.
6. AIR SUPPLY IS RATIO CONTROLLED TO WATER SUPPLY.
7. COMPONENTS ON THIS DRAWING ARE QUALITY LEVEL 2 AND SEISMIC CATEGORY III UNLESS NOTED OTHERWISE.
8. CONTENTS OF THIS DRAWING ARE DANGEROUS WASTE PERMIT AFFECTING.
9. ALL VALVE CONTROLLERS, ETC. ARE BUYER SCOPE OF SUPPLY.
10. HOP FANS ARE TO BE FED BY THE EMERGENCY DIESEL GENERATOR REDUNDUNT UPS OFF SITE POWER.
11. THE PORTIONS OF THIS DRAWING IN PHANTOM ARE CONSIDERED NON-PERMIT AFFECTING AND ARE NOT SUBJECT TO THE REGULATORY REQUIREMENTS OF THE WAC CODE FOR THE DANGEROUS WASTE PERMIT TO THE EXTENT THAT THOSE PORTIONS DO NOT IMPACT DANGEROUS WASTE AREAS/OPERATIONS.

HOLD/OPEN ITEMS:

1. DELETED.
2. DELETED.

REFERENCES:

1. 24590-HLW-M5-V17T-P0004 "PROCESS FLOW DIAGRAM HLW VITRIFICATION MELTER 1SECONDARY OFFGAS TREATMENT (SYSTEM HOP)"

PLEASE NOTE RWA" SOURCE, SPECIAL NUCLEAR AND BYPRODUCT MATERIALS, AS DEFINED IN THE ATOMIC ENERGY ACT OF 1954 (AEA) ARE REGULATED AT THE U.S. DEPARTMENT OF ENERGY (DOE) FACILITIES EXCLUSIVELY BY DOE ACTING PURSUANT TO ITS AEA AUTHORITY. DOE ASSERTS, THAT PURSUANT TO THE AEA IT HAS SOLE AND EXCLUSIVE RESPONSIBILITY AND AUTHORITY TO REGULATE SOURCE, SPECIAL NUCLEAR, AND BYPRODUCT MATERIAL AT DOE-OWNED NUCLEAR FACILITIES. INFORMATION CONTAINED HEREIN OR INFORMATIONS IS PROVIDED FOR PROCESS DESCRIPTION PURPOSES ONLY

REV	DESCRIPTION	DRG	CHKD	RVWD	APVD	DATE
0	ISSUED FOR PERMITTING USE	JPM	AC	DBG	TJV	1-22-04

REVISION HISTORY

PROJECT No. 24590
SITE HANFORD
AREA 200E
BUILDING No. 30

RIVER PROTECTION PROJECT
WASTE TREATMENT PLAN
2435 STEVENS CENTER PLACE
RICHLAND, WA 99352

CONTRACT No DE-AC27-01RV14136

ORGANIZATION — DATE 1/22/04
CHECKER — DATE 1-22-04
APPROVER — DATE 1-22-04
REVIEWER — DATE 1-22-04

P&ID - HLW MELTER OFFGAS SYSTEM MELTER 1 SECONDARY OFFGAS TREATMENT SHEET 1 OF 2

SCALE: NONE
24590-HLW-M6-HOP-P0003
REV 0

FORM E_SDR-BON 02/2003

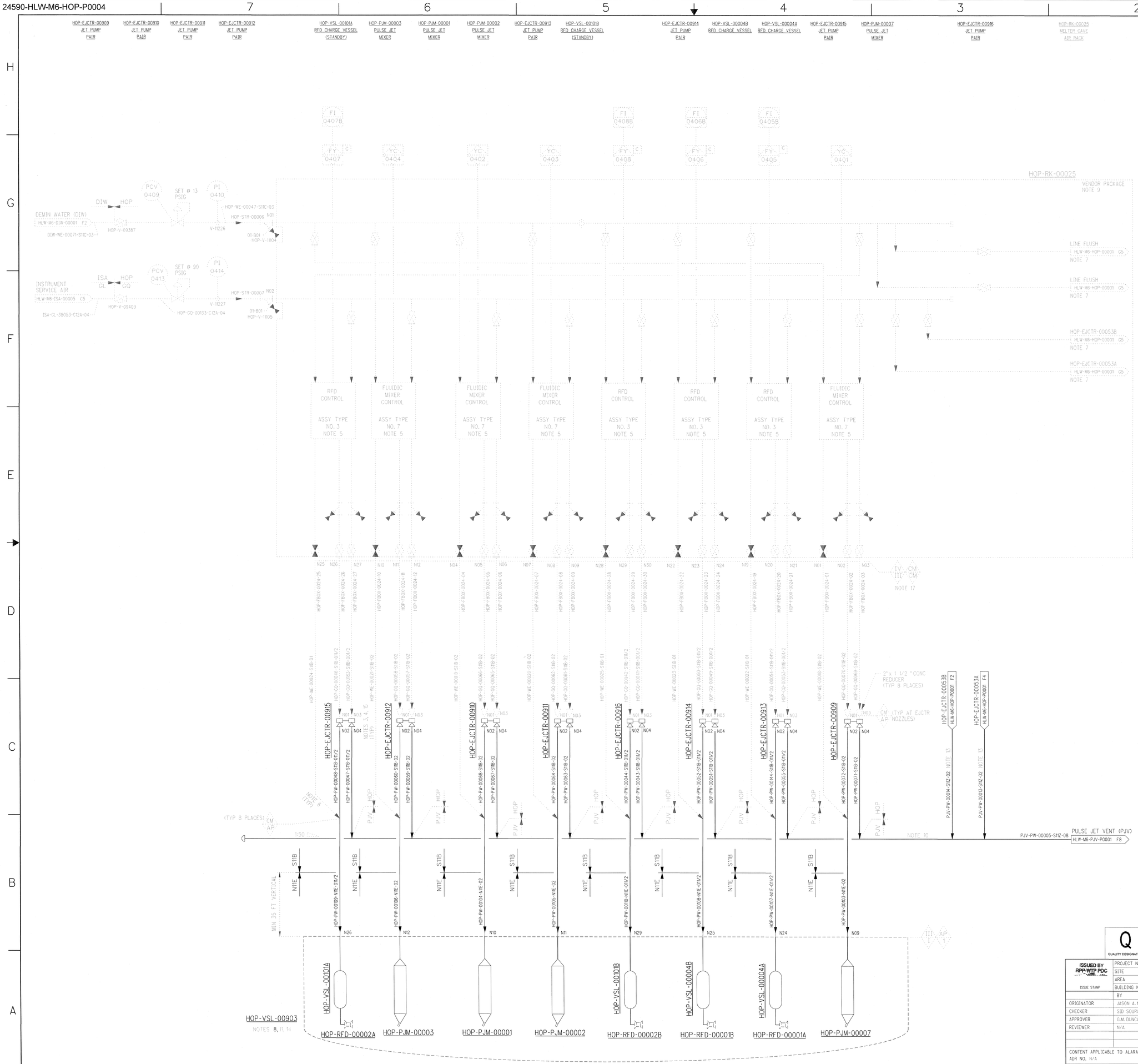

NOTES:

THE FOLLOWING NOTES ARE GENERAL NOTES FOR HOP SYSTEM

1. SEE DRAWING 24590-WTP-M6-50-P0001 THROUGH 24590-WTP-M6-50-P0006 FOR GENERAL NOTES, SYMBOLS AND LEGEND.
2. DELETED.

THE FOLLOWING NOTES ARE SPECIFIC TO THIS DRAWING

3. ALL JET PUMP PAIRS HAVE A MINIMUM VERTICAL DISTANCE OF 35 FEET ABOVE THE PROCESS VESSEL NOZZLES. AIR PIPING LENGTH FROM JET PUMP PAIRS DRIVE AIR OUTLET NOZZLE TO PULSE JET MIXER OR REVERSE FLOW DIVERTER INLET NOZZLE, TO BE A MAXIMUM OF 100 FEET.
4. ALL JET PUMP PAIRS ARE TO BE POSITIONED VERTICALLY.
5. FLUIDICS CONTROLLER DETAIL SHOWN ON "P&ID SYMBOLS AND LEGEND SHEET 6 OF 6 24590-WTP-M6-50-P0006".
6. A LATERAL FITTING IS TO BE USED AT THIS LOCATION TO ACCOMMODATE CLEANING OF PIPE AND EQUIPMENT.
7. PORTION OF HOP-RK-00025 IS LOCATED ON 24590-HLW-M6-HOP-P0001.
8. FOR VESSEL DETAILS SEE DRAWING 24590-HLW-M6-HOP-P0006.
9. INTERNAL RACK CONFIGURATION IS SUBJECT TO OPTIMIZATION OF PIPE LAYOUT.
10. THIS LINE IS QUALITY LEVEL AP AND SEISMIC CATEGORY III.
11. VESSEL HOP-VSL-00903 IS PROCURED SEISMIC CATEGORY I AND QUALITY LEVEL 1 FOR IMPROVED RELIABILITY. THE EQUIPMENT IS SEISMIC CATEGORY III AND QUALITY LEVEL 2 PER SAFETY FUNCTION AND AUTHORIZATION BASIS (PSAR). RFDs ARE QUALITY LEVEL "CM".
12. CONTENTS OF THIS DOCUMENT ARE DANGEROUS WASTE PERMIT AFFECTING.
13. THIS LINE IS QUALITY LEVEL 2 AND SEISMIC CATEGORY III.
14. REFER TO ENGINEERING SPECIFICATION 24590-WTP-MV00-TP001 FOR VESSEL NOZZLE LOADS.
15. ALL JET PUMP PAIRS ARE SEISMIC CATEGORY III AND AP QUALITY.
16. DELETED.
17. JOGGLED PENETRATIONS SHALL BE DESIGNED TO QL-1/SC-I CRITERIA.
18. SLOPE FOR LINES WITH FLUID CODE OF 'WE' AND 'PW' IN CELL AND OUT CELL SHALL BE A MINIMUM OF 1:200, UNLESS OTHERWISE NOTED.
19. THE PORTIONS OF THIS DRAWING SHOWN IN PHANTOM ARE CONSIDERED NON-PERMIT AFFECTING AND ARE NOT SUBJECT TO THE REGULATORY REQUIREMENTS OF THE WAC CODE FOR THE DANGEROUS WASTE PERMIT TO THE EXTENT THAT THOSE PORTIONS DO NOT IMPACT DANGEROUS WASTE AREAS/OPERATIONS.
20. REVISED QUALITY LEVELS, CHANGED FLOORBOX TO JOGGLED PENETRATION, UPDATED LINE SIZES, UPDATED VALVES AND UTILITIES, ADDED REDUCERS, AND REORGANIZED ORDER OF ENTRY INTO VENT.

HOLD/OPEN ITEMS:

1. THIS LINE IS RELEASED FOR ENGINEERING AND DESIGN ONLY. THIS LINE IS ON HOLD FOR PROCUREMENT OF MATERIALS OR ITEMS, FABRICATION, TESTING, DELIVERY, INSTALLATION OR CONSTRUCTION PENDING DOE APPROVAL OF ABAR.

REFERENCES:

1. 24590-HLW-M5-V17T-P0003, "PROCESS FLOW DIAGRAM, HLW VIT MELTER 1 PRIMARY OFFGAS TREATMENT" (SYSTEM HOP).

ERIC B. ISKEN — STATE OF WASHINGTON — 33449 — REGISTERED PROFESSIONAL ENGINEER — 3/31/05 — EXPIRES: 07/28/05

PLEASE NOTE THAT SOURCE, SPECIAL NUCLEAR AND BYPRODUCT MATERIALS, AS DEFINED IN THE ATOMIC ENERGY ACT OF 1954 (AEA), ARE REGULATED AT THE U.S. DEPARTMENT OF ENERGY (DOE) FACILITIES EXCLUSIVELY BY DOE ACTING PURSUANT TO ITS AEA AUTHORITY. DOE ASSERTS, THAT PURSUANT TO THE AEA, IT HAS SOLE AND EXCLUSIVE RESPONSIBILITY AND AUTHORITY TO REGULATE SOURCE, SPECIAL NUCLEAR, AND BYPRODUCT MATERIAL AT DOE-OWNED NUCLEAR FACILITIES. INFORMATION CONTAINED HEREIN ON RADIONUCLIDES IS PROVIDED FOR PROCESS DESCRIPTION PURPOSES ONLY.

REV	DESCRIPTION	ORG	CHKD	RVWD	APVD	DATE
2	MAJOR REVISION, SEE NOTE 20 ISSUED FOR PERMITTING USE	JM	SJC	TV	TV	3-30-05
1	ISSUED FOR PERMITTING USE	JM	SJC	DMY	TV	6-3-03
0	ISSUED FOR PERMITTING USE	JM	SJC	N/A	SCF	12-17-02

REVISION HISTORY

Q — QUALITY DESIGNATOR

ISSUED BY RPP-WTP PDC — ISSUE STAMP

PROJECT No.	24590	
SITE	HANFORD	
AREA	200E	
BUILDING No.	30	
	BY	DATE
ORIGINATOR	JASON A. MEDINA	10-09-02
CHECKER	SID SOURANI	10-09-02
APPROVER	G.M. DUNCAN	10-10-02
REVIEWER	N/A	

CONTENT APPLICABLE TO ALARA? [X] YES [ ] NO
ADR NO. N/A REV:

BECHTEL

RIVER PROTECTION PROJECT
WASTE TREATMENT PLANT
2435 STEVENS CENTER PLACE
RICHLAND, WA 99352

CONTRACT No: DE-AC27-01RV14136

P&ID - HLW MELTER 1 OFFGAS FLUIDIC AIR RACK HOP-RK-00025

SCALE: NONE

24590-HLW-M6-HOP-P0004 — REV 2

R10523694

03/29/2005 01:19:40 PM

PLOTTED BY: eenesb
C:\Work\dms05070\HLW\HOP\P0004r2.dgn

'E' SIZE - 44x34
COMPUTER GENERATED - MANUAL CHANGES NOT PERMITTED

FORM E_SDN.DGN 02/2003

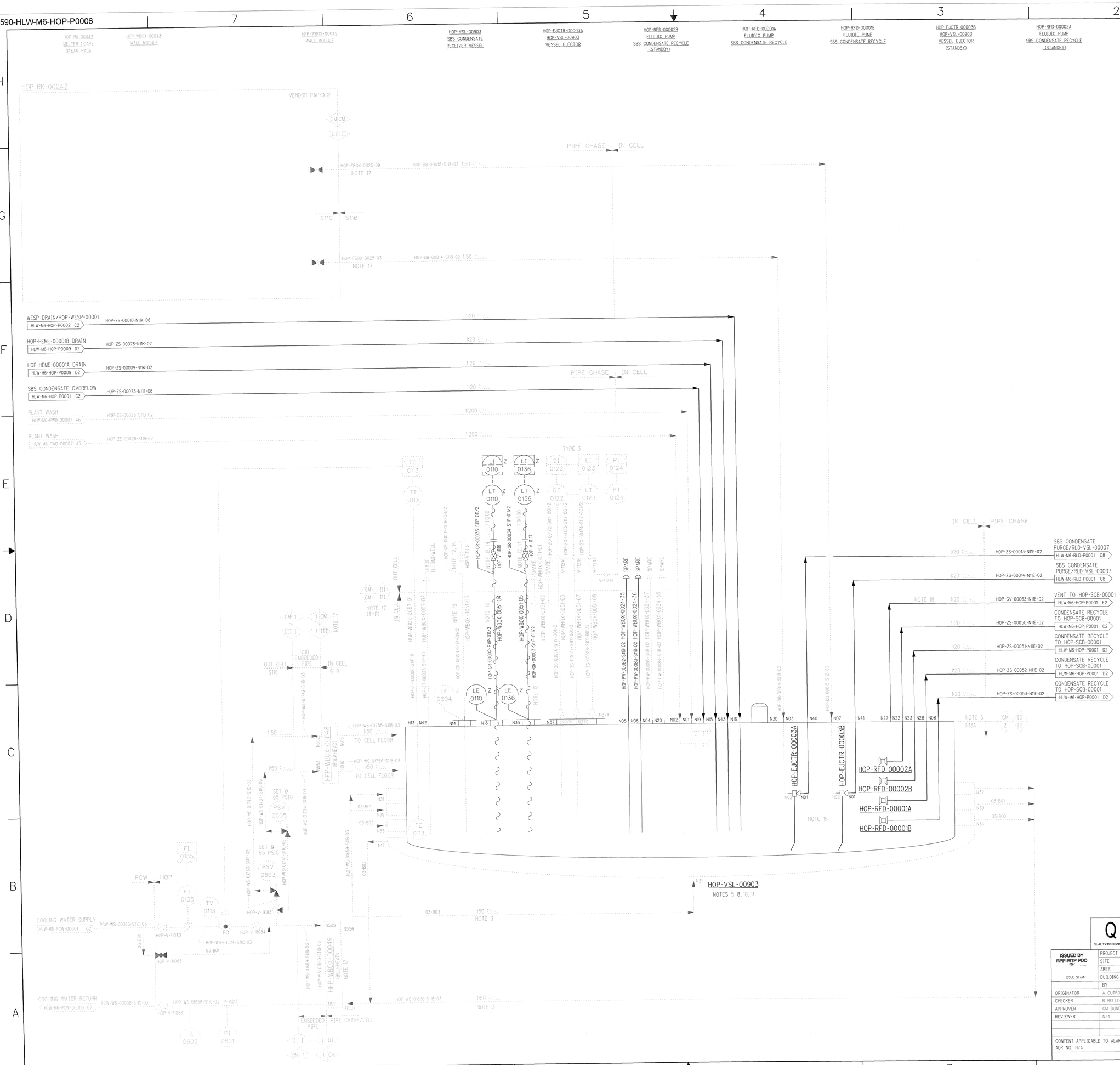

NOTES:

THE FOLLOWING NOTES ARE GENERAL NOTES FOR HMP SYSTEM

1. SEE DRAWINGS 24590-WTP-M6-50-P0001 THROUGH 24590-WTP-M6-50-P0006 FOR GENERAL NOTES, SYMBOLS AND LEGEND.
2. DELETED.

THE FOLLOWING NOTES ARE SPECIFIC TO THIS DRAWING.

3. COOLING WATER SUPPLY AND RETURN PIPES TO SLOPE FROM WALLBOX LOCATED ABOVE PROCESS VESSEL.
4. STRAINER AND/OR MANUAL VALVE(S) REFERRING TO THIS NOTE ARE COMMERCIAL GRADE QUALITY. ADDITIONAL QUALITY LEVEL REQUIREMENTS WILL BE IMPOSED DUE TO INSTALLATION IN SEISMIC CATEGORY I PIPING.
5. IN VESSEL PIPE CLASS CHANGE TO N13A, HASTELLOY C-22.
6. DELETED.
7. NOT USED.
8. SEE 24590-HLW-M6-HOP-P0004 FOR DETAILS ON PULSE JET MIXER AND CHARGE VESSELS.
9. CONTENTS OF THIS DRAWING ARE DANGEROUS WASTE PERMIT AFFECTING.
10. VESSEL HOP-VSL-00903 IS PROCURED SEISMIC CATEGORY I AND QUALITY LEVEL 1 FOR IMPROVED RELIABILITY.
11. REFER TO ENGINEERING SPECIFICATION 24590-WTP-3PS-MV00-T0001 FOR VESSEL NOZZLE LOADS.
12. THIS LINE IS QUALITY LEVEL 2 AND SEISMIC CATEGORY III.
13. DELETED.
14. RADAR GUIDE TUBE IS TO BE ROUTED TO TRANSMITTER. A FULL PORT BALL VALVE IS REQUIRED FOR ISOLATION PURPOSES AT TRANSMITTER END OF GUIDE TUBE.
15. EJECTORS AND RFD'S INSIDE VESSEL ARE COMMERCIAL QUALITY AND SEISMIC CATEGORY III.
16. DELETED.
17. JOGGLED PENETRATIONS AND WALL MODULES INCLUDING INTERNAL PIPING ARE QUALITY LEVEL 1 AND SEISMIC CATEGORY I. BULKHEAD STRUCTURES ARE QUALITY LEVEL 2 AND SEISMIC CATEGORY II. SERVICE PIPING WITHIN THE BULKHEAD IS COMMERCIAL GRADE AND SEISMIC CATEGORY III.
18. THIS LINE IS QUALITY LEVEL AP AND SEISMIC CATEGORY III.
19. THE PORTIONS OF THIS DRAWING SHOWN IN PHANTOM ARE CONSIDERED NON-PERMIT AFFECTING AND ARE NOT SUBJECT TO THE REGULATORY REQUIREMENTS OF THE WAC CODE FOR THE DANGEROUS WASTE PERMIT TO THE EXTENT THAT THOSE PORTIONS DO NOT IMPACT DANGEROUS WASTE AREAS/OPERATIONS.
20. REVISED QUALITY LEVELS & SEISMIC CATEGORIES, INCORPORATED WALL MODULE DESIGN, ADDED DUAL PSVs, UPDATED VALVES AND UPDATED IN-CELL PIPE CLASS.

REFERENCES:

1. 24590-HLW-M5-V17T-P0003, "PROCESS FLOW DIAGRAM, HLW VIT MELTER 1 PRIMARY OFFGAS TREATMENT" (SYSTEM HOP).

ERIC B. ISBERG — STATE OF WASHINGTON — 33449 — REGISTERED PROFESSIONAL ENGINEER — 3/30/05
EXPIRES: 07/28/05

PLEASE NOTE THAT SOURCE, SPECIAL NUCLEAR AND BYPRODUCT MATERIALS, AS DEFINED IN THE ATOMIC ENERGY ACT OF 1954 (AEA), ARE REGULATED AT THE U.S. DEPARTMENT OF ENERGY (DOE) FACILITIES EXCLUSIVELY BY DOE ACTING PURSUANT TO ITS AEA AUTHORITY. DOE ASSERTS, THAT PURSUANT TO THE AEA, IT HAS SOLE AND EXCLUSIVE RESPONSIBILITY AND AUTHORITY TO REGULATE SOURCE, SPECIAL NUCLEAR, AND BYPRODUCT MATERIAL AT DOE-OWNED NUCLEAR FACILITIES. INFORMATION CONTAINED HEREIN ON RADIONUCLIDES IS PROVIDED FOR PROCESS DESCRIPTION PURPOSES ONLY.

Q — QUALITY DESIGNATOR

REVISION HISTORY

REV	DESCRIPTION	ORG	CHKD	RVWD	APVD	DATE
2	MAJOR REVISION, SEE NOTE 20 ISSUED FOR PERMITTING USE	JM	SJC	DMY	TV	3-30-05
1	ISSUED FOR PERMITTING USE	JM	SJC	DMY	TV	6-3-03
0	ISSUED FOR PERMITTING USE	JM	SJC	N/A	SCF	12-1-02

ISSUED BY RPP-WTP PDC — ISSUE STAMP

PROJECT No.	24590	
SITE	HANFORD	
AREA	200E	
BUILDING No.	30	

	BY	DATE
ORIGINATOR	A. CUTRONA	10-09-02
CHECKER	R BULLOCK	10-09-02
APPROVER	GM DUNCAN	10-10-02
REVIEWER	N/A	

CONTENT APPLICABLE TO ALARA? [X] YES [ ] NO
ADR NO. N/A REV:

BECHTEL

RIVER PROTECTION PROJECT
WASTE TREATMENT PLANT
2435 STEVENS CENTER PLACE
RICHLAND, WA 99352

CONTRACT No: DE-AC27-01RV14136

P&ID - HLW
MELTER OFFGAS SYSTEM
MELTER 1
PRIMARY OFFGAS SCRUBBER CONDENSATE VESSEL

SCALE: NONE | 24590-HLW-M6-HOP-P0006 | REV 2

"E" SIZE - 44x34
COMPUTER GENERATED - MANUAL CHANGES NOT PERMITTED

R10523693

03/29/2005 01:21:14 PM

PLOTTED BY: ewebb
C:\Work dms\0700\HLW\M6\HOP\P0006-2.dgn

FORM E_SDN.DGN 02/2003

24590-HLW-M6-HOP-P0008

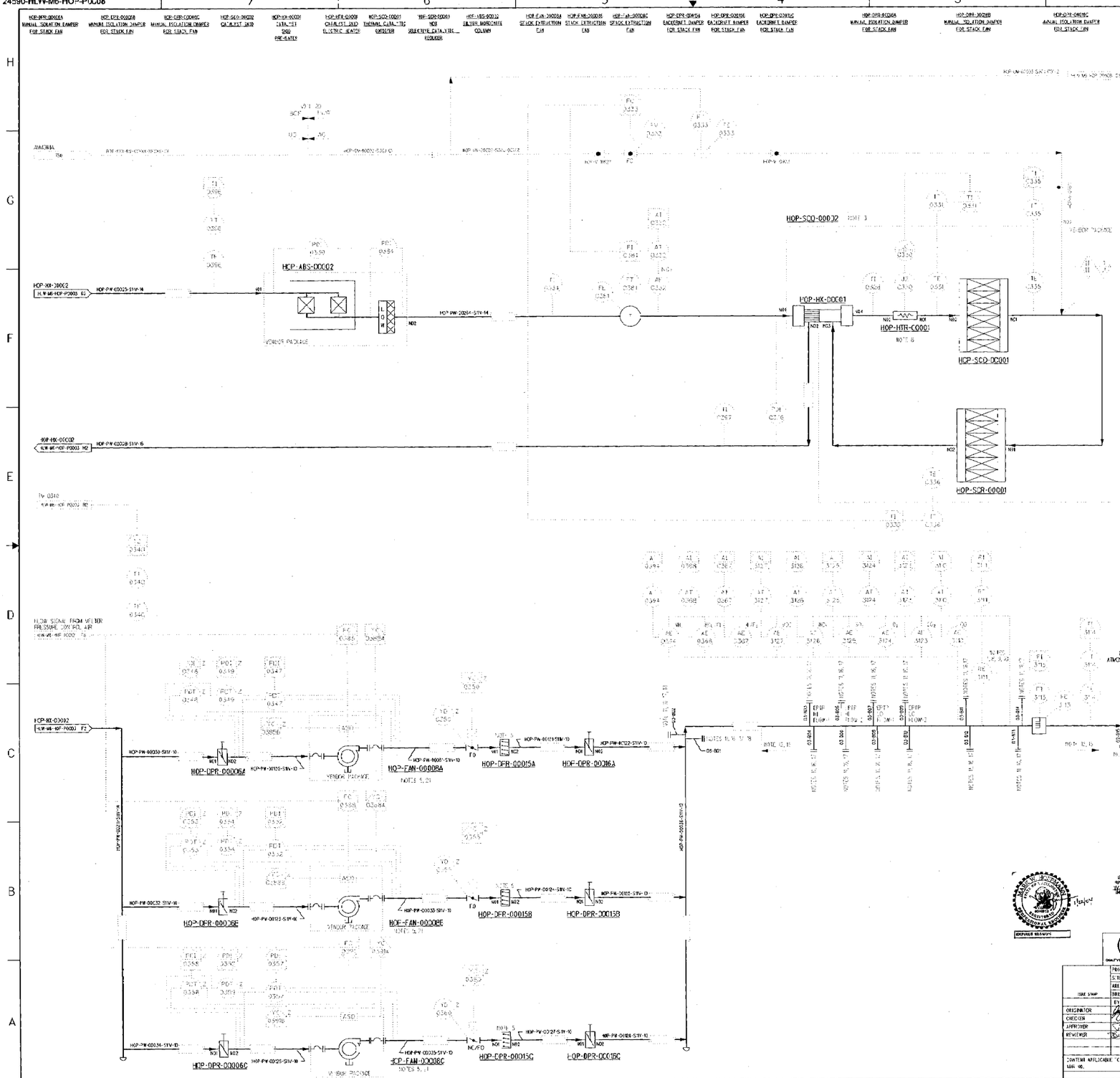

NOTES:

THE FOLLOWING NOTES ARE GENERAL NOTES FOR HOP SYSTEM

1. SEE DRAWINGS 24590-WTP-M5-50-P0001 THROUGH 24590-WTP-M5-50-P0006 FOR GENERAL NOTES, SYMBOLS AND LEGEND.
2. DELETED.

THE FOLLOWING NOTES ARE SPECIFIC TO THIS DRAWING

3. CATALYTIC OXIDIZER SKID (HOP-ABS-00002) CONSISTS OF THE MECHANICAL HEAT EXCHANGER, ELECTRIC HEATER, INTERCONNECTING DUCTWORK, SELECTIVE CATALYTIC REDUCER (HOP-SCR-00001) AND THE ORGANIC ABSORBER (HOP-ABS-00001).
4. DELETED.
5. FAN-00008A/B/C ARE 50% CAPACITY EACH AND WILL BE OPERATED ON A ROTATING BASIS. 2 OPERATING, ONE ON STANDBY. THE ACTUATED DISCHARGE DAMPER FOR THE FAN IN STANDBY WILL BE MANUALLY CLOSED.
6. HEATER UNIT SHALL BE EQUIPPED WITH OVER-TEMPERATURE PROTECTION (SUPPLIED BY VENDOR).
7. RADIATION MONITORS SHALL BE PROVIDED TO MONITOR ALPHA/BETA RECORD SAMPLER FOR RETROSPECTIVE ANALYSIS SHALL BE PROVIDED.
8. DELETED SAMPLER.
9. ANALYZERS FOR CO, SO_2, O_2, NOx, VOC AND SO_2 ARE PROVIDED FOR AIR PERMIT CONDITIONS. ANALYZERS FOR HF, HCL, H_2, H_2O AND CO_2 ARE PROVIDED FOR PROCESS INDICATION. THE VOC AND NOx ANALYZERS ALSO PROVIDE PROCESS INDICATION.
10. SINGLE CHANNEL CONTINUOUS SAMPLER FOR (CODE 29 IS SPECIFIED FOR PWV DUCT).
11. TEST PORTS PLACED AT 90° ORIENTATION.
12. THE 3000 SERIES INSTRUMENTS ARE SBS SYSTEM, AND THE 0300 SERIES INSTRUMENTS AND PIPE REMAIN HOP SYSTEM.
13. ALL EQUIPMENT, PIPING PIPING COMPONENTS, INSTRUMENTS ON THIS DRAWING ARE QL-2 / SCIE UNLESS NOTED OTHERWISE.
14. CONTENTS OF THIS DRAWING ARE DANGEROUS WASTE PERMIT AFFECTING.
15. DELETED.
16. ALLOW 24 INCHES CLEARANCE AROUND TEST PORTS FOR PROBE INSERTION AND EXTRACTION.
17. INSTALL BLIND FLANGE DIRECTLY ON PIPE.
18. LOCATE INJECTION PORT AFTER STACK FANS AND BEFORE LAST BEND TO SUIT SAMPLE PORTS AND MINIMUM STRAIGHT PIPE DIA. FROM INJECTION PORT TO LAST BEND REQUIRED.
19. LOCATE STACK DRAIN AT LOWEST TO ALLOW PLACEMENT OF 50 GAL DRUM ON TROLLEY UNDERNEATH.
20. BOP FLOW BOUNDARY IS AT THE WALL.
21. EQUIPMENT ARE TO BE FED BY THE EMERGENCY DIESEL GENERATOR (EDG) ON LOSS OF OFFSITE POWER.
22. THE PORTIONS OF THIS DRAWING SHOWN IN PHANTOM ARE CONSIDERED NON-PERMIT AFFECTING AND ARE NOT SUBJECT TO THE REGULATORY REQUIREMENTS OF THE WAC CODE FOR THE DANGEROUS WASTE PERMIT TO THE EXTENT THAT THOSE PORTIONS DO NOT IMPACT DANGEROUS WASTE AREAS/OPERATIONS.

HOLD/OPEN ITEMS:

1. DELETED
2. DELETED
3. DELETED
4. DELETED
5. DELETED

REFERENCES:

1. 24590-HLW-M5-VTT-P0004 "PROCESS FLOW DIAGRAM HLW VITRIFICATION MELTER 1 SECONDARY OFFGAS TREATMENT (SYSTEM HOP)"

PLEASE NOTE THAT SOURCE, SPECIAL NUCLEAR AND BYPRODUCT MATERIALS AS DEFINED IN THE ATOMIC ENERGY ACT OF 1954 MAY ARE REGULATED AT THE U.S. DEPARTMENT OF ENERGY HQ FACILITIES EXCLUSIVELY BY DOE ACTING PURSUANT TO ITS AEA AUTHORITY. DOE ASSERTS, THAT PURSUANT TO THE AEA IT HAS SOLE AND EXCLUSIVE RESPONSIBILITY AND AUTHORITY TO REGULATE SOURCE, SPECIAL NUCLEAR, AND BYPRODUCT MATERIAL AT DOE-OWNED NUCLEAR FACILITIES. INFORMATION CONTAINED HEREIN (IN PARENTHESIS) DOES IS PROVIDED FOR PROCESS DESCRIPTION PURPOSES ONLY.

ISSUED BY RPP/WTPPDC

REV	DESCRIPTION	CRG	CHKD	RVWD	APVD	DATE
0	ISSUED FOR PERMITTING USE	TMT	AC	MEC	DV	12/22/04

Q QUALITY DESIGNATOR

REVISION HISTORY

PROJECT No.	24590	
SITE	HANFORD	
AREA	2000	
BUILDING No.	30	
ISSUE STAMP	BY	DATE
ORIGINATOR		12/23/04
CHECKER		12/23/04
APPROVER		12/23/04
REVIEWER		12/23/04
CONTAINS APPLICABLE "C" ALARM?	YES / NO	
SAR VOL.	REV.	

RIVER PROTECTION PROJECT
WASTE TREATMENT PLANT
2435 STEVENS CENTER PLACE
RICHLAND, WA 99352

CONTRACT No. DE-AC27-01RV14136

P&ID - HLW MELTER OFFGAS SYSTEM MELTER 1 SECONDARY OFFGAS TREATMENT SHEET 2 OF 2

SCALE: NONE

24590-HLW-M6-HOP-P0008

REV: 0

FORM IE_SENIOR 03-2002

IE SIZE = 44x34
COMPLETE 24590-HLW-M6-HOP-P0008.dgn
CHANGES NOT PERMITTED

01/22/2004 09:48:19 AM

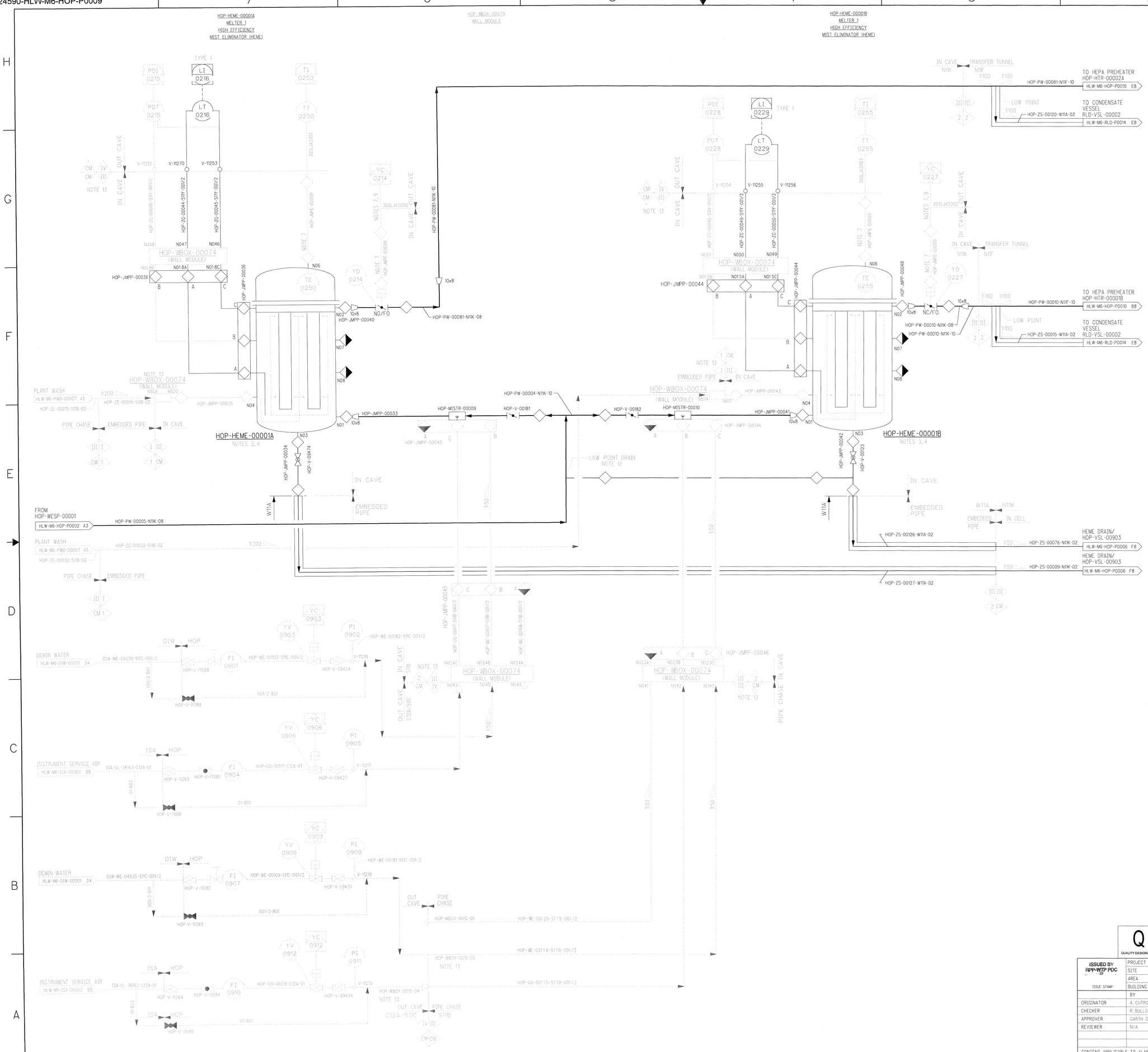

NOTES:

THE FOLLOWING NOTES ARE GENERAL NOTES FOR THE HOP SYSTEM.

1. SEE DRAWINGS 24590-WTP-M6-50-P0001 THROUGH 24590-WTP-M6-50-P0006 FOR GENERAL NOTES, SYMBOLS AND LEGEND.
2. DELETED.

THE FOLLOWING NOTES ARE SPECIFIC FOR THIS DRAWING.

3. THE HEMES ARE QUALITY LEVEL QL-2 AND SEISMIC CATEGORY III. EACH HEME (HOP-HEME-00001A/B) CONTAINS FIVE (5) MULTI-SECTION FILTER ELEMENTS DESIGNED FOR REMOTE REPLACEMENT.
4. REFER TO ENGINEERING SPECIFICATION 24590-WTP-3PS-MV00-TP001 FOR VESSEL NOZZLE LOADS.
5. DELETED.
6. NOT USED.
7. DELETED.
8. CONTENTS OF THIS DRAWING ARE DANGEROUS WASTE PERMIT AFFECTING.
9. THE SOFTWARE FUNCTIONAL SPECIFICATION SHALL REQUIRE AT LEAST ONE HEME/HEPA OFFGAS TRAIN OPEN AT ALL TIMES.
10. DELETED.
11. DELETED.
12. DRAIN TO BE FREE FLOWING (NO VALVES) TO CONDENSATE VESSEL.
13. JOGGLED PENETRATIONS AND WALL MODULES INCLUDING INTERNAL PIPING ARE QUALITY LEVEL 1 AND SEISMIC CATEGORY I. BULKHEAD STRUCTURES ARE QUALITY LEVEL 2 AND SEISMIC CATEGORY II. SERVICE PIPING WITHIN THE BULKHEAD IS COMMERCIAL GRADE AND SEISMIC CATEGORY III.
14. DELETED.
15. THE PORTIONS OF THIS DRAWING SHOWN IN PHANTOM ARE CONSIDERED NON-PERMIT AFFECTING AND ARE NOT SUBJECT TO THE REGULATORY REQUIREMENTS OF THE WAC CODE FOR THE DANGEROUS WASTE PERMIT TO THE EXTENT THAT THOSE PORTIONS DO NOT IMPACT DANGEROUS WASTE AREAS/OPERATIONS.
16. REVISED QUALITY LEVELS & SEISMIC CATEGORIES, INCORPORATED WALL MODULE DESIGN, UPDATED UTILITIES, VALVES, AND JUMPERS, AND UPDATED IN-CELL PIPE CLASS.

REFERENCES:

1. 24590-HLW-M5-V17T-P0003 "PROCESS FLOW DIAGRAM, HLW VIT MELTER 1 PRIMARY OFFGAS TREATMENT" (SYSTEM HOP).

ERIC B. ISERAN
STATE OF WASHINGTON
23549
REGISTERED PROFESSIONAL ENGINEER
3/30/05
EXPIRES: 01/28/05

PLEASE NOTE THAT SOURCE, SPECIAL NUCLEAR AND BYPRODUCT MATERIALS, AS DEFINED IN THE ATOMIC ENERGY ACT OF 1954 (AEA), ARE REGULATED AT THE U.S. DEPARTMENT OF ENERGY (DOE) FACILITIES EXCLUSIVELY BY DOE ACTING PURSUANT TO ITS AEA AUTHORITY. DOE ASSERTS, THAT PURSUANT TO THE AEA, IT HAS SOLE AND EXCLUSIVE RESPONSIBILITY AND AUTHORITY TO REGULATE SOURCE, SPECIAL NUCLEAR, AND BYPRODUCT MATERIAL AT DOE-OWNED NUCLEAR FACILITIES. INFORMATION CONTAINED HEREIN ON RADIONUCLIDES IS PROVIDED FOR PROCESS DESCRIPTION PURPOSES ONLY.

REV	DESCRIPTION	ORG	CHKD	RVWD	APVD	DATE
1	MAJOR REVISION, SEE NOTE 15 ISSUED FOR PERMITTING USE	JM	SSC	YM	TV	3-30-05
0	ISSUED FOR PERMITTING USE	JM	YM	TV	TV	3-31-04

REVISION HISTORY

Q
QUALITY DESIGNATOR

ISSUED BY RPP-WTP PDC
ISSUE STAMP

PROJECT No.	24590	
SITE	HANFORD	
AREA	200E	
BUILDING No.	30	
	BY	DATE
ORIGINATOR	A. CUTRONA	10/9/02
CHECKER	R. BULLOCK	10/9/02
APPROVER	GARTH DUNCAN	10/10/02
REVIEWER	N/A	

CONTENT APPLICABLE TO ALARA? [X] YES [ ] NO
ADR NO. N/A REV:

BECHTEL
RIVER PROTECTION PROJECT
WASTE TREATMENT PLANT
2435 STEVENS CENTER PLACE
RICHLAND, WA 99352

CONTRACT No: DE-AC27-01RV14136

P&ID - HLW
MELTER OFFGAS SYSTEM
MELTER 1
PRIMARY OFFGAS HEME

SCALE: NONE
24590-HLW-M6-HOP-P0009
REV 1

'E' SIZE - 44x34
COMPUTER GENERATED - MANUAL CHANGES NOT PERMITTED

R10523991

03/29/2005 01:23:56 PM
PLOTTED BY: eewebb
C:\Work\sms\05070\HLW\M6\HOP\P0009\1.dgn

FORM E_SDN.DGN 02/2003

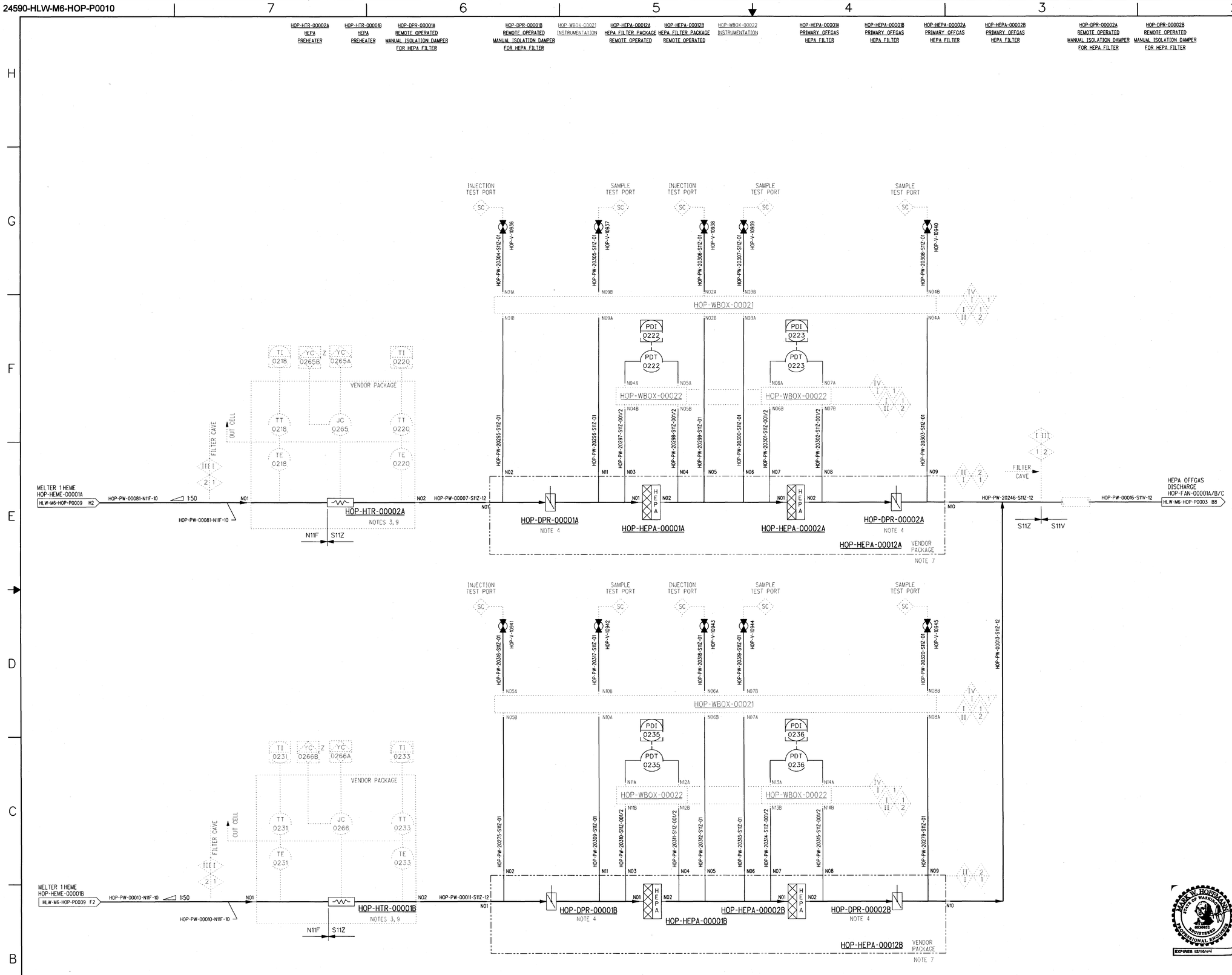

NOTES:

THE FOLLOWING NOTES ARE GENERAL NOTES FOR HOP SYSTEM

1. SEE DRAWINGS 24590-WTP-M6-50-P0001 THROUGH 24590-WTP-M6-50-P0006 FOR GENERAL NOTES, SYMBOLS AND LEGEND.
2. DELETED.

THE FOLLOWING NOTES ARE SPECIFIC TO THIS DRAWING

3. HEPA PRE-HEATERS (HOP-HTR-00002A/1B) ARE MULTI-ELEMENT UNITS WITH STANDBY ELEMENTS. THE HEATER ASSEMBLY IS INSET IN THE FILTER CAVE WALL AND THE TEMPERATURE ELEMENTS AND HEATER CONTROLLER PENETRATE THROUGH A STEEL SHIELDING PLATE. HEATER UNIT SHALL BE EQUIPPED WITH OVER-TEMPERATURE PROTECTION (SUPPLIED BY VENDOR).
4. DAMPERS ARE REMOTE MANUAL MANIPULATOR ACTUATED.
5. NOT USED.
6. CONTENTS OF THIS DOCUMENT ARE DANGEROUS WASTE PERMIT AFFECTING.
7. VENDOR PACKAGE INCLUDES THE HEPA FILTER HOUSING, ISOLATION DAMPERS, TEST PORT CONNECTION POINT, AND INTERCONNECTING PIPING. THE PACKAGE IS IDENTIFIED BY THE HEPA HOUSING COMPONENT ID NUMBERS FOR PROCUREMENT AND MEETS ASME AG-1 REQUIREMENTS.
8. NOT USED.
9. ON LOSS OF FUNCTIONAL CONTROL, THE PRE-HEATER CONTROLLER WILL HOLD TO LAST SET POINT VALUE. PRE-HEATER WILL BE FED FROM THE EMERGENCY DIESEL GENERATOR (EDG).
10. DELETED.
11. THE PORTIONS OF THIS DRAWING SHOWN IN PHANTOM ARE CONSIDERED NON-PERMIT AFFECTING AND ARE NOT SUBJECT TO THE REGULATORY REQUIREMENTS OF THE WAC CODE FOR THE DANGEROUS WASTE PERMIT TO THE EXTENT THAT THOSE PORTIONS DO NOT IMPACT DANGEROUS WASTE AREAS/OPERATIONS.

REFERENCES:

1. 24590-HLW-M5-V17T-P0003 "PROCESS FLOW DIAGRAM, HLW VIT MELTER 1 PRIMARY OFFGAS TREATMENT" (SYSTEM HOP).

MARK W. HORNBACHER, STATE OF WASHINGTON, 38392, REGISTERED PROFESSIONAL ENGINEER, 4/1/04, EXPIRES 12/15/04

PLEASE NOTE THAT SOURCE, SPECIAL NUCLEAR AND BYPRODUCT MATERIALS, AS DEFINED IN THE ATOMIC ENERGY ACT OF 1954 (AEA), ARE REGULATED AT THE U.S. DEPARTMENT OF ENERGY (DOE) FACILITIES EXCLUSIVELY BY DOE ACTING PURSUANT TO ITS AEA AUTHORITY. DOE ASSERTS, THAT PURSUANT TO THE AEA, IT HAS SOLE AND EXCLUSIVE RESPONSIBILITY AND AUTHORITY TO REGULATE SOURCE, SPECIAL NUCLEAR, AND BYPRODUCT MATERIAL AT DOE-OWNED NUCLEAR FACILITIES. INFORMATION CONTAINED HEREIN ON RADIONUCLIDES IS PROVIDED FOR PROCESS DESCRIPTION PURPOSES ONLY.

Q QUALITY DESIGNATOR

REV	DESCRIPTION	ORG	CHKD	RVWD	APVD	DATE
0	ISSUED FOR PERMITTING USE	JM	GM	RBY	DV	3-31-04

REVISION HISTORY

ISSUED BY PROJECT ENGINEERING 3-31-04 ISSUE STAMP

PROJECT No.	24590
SITE	HANFORD
AREA	200E
BUILDING No.	30

	BY	DATE
ORIGINATOR		3/30/04
CHECKER		3/30/04
APPROVER		3-31-04
REVIEWER		3-30-04

CONTENT APPLICABLE TO ALARA? [X] YES [ ] NO
ADR NO. N/A REV:

BECHTEL

RIVER PROTECTION PROJECT
WASTE TREATMENT PLANT
2435 STEVENS CENTER PLACE
RICHLAND, WA 99352

CONTRACT No: DE-AC27-01RV14136

P&ID - HLW
MELTER OFFGAS SYSTEM
MELTER 1
PRIMARY OFFGAS HEPA FILTERS

SCALE: NONE

24590-HLW-M6-HOP-P0010

REV 0

"E" SIZE 44x34
COMPUTER GENERATED - MANUAL CHANGES NOT PERMITTED

R10281668

03/30/2004 07:38:24 AM

PLOTTED BY: kanderso
C:\Work\dms25270\HLW\M6\HOP\P0010.dgn

FORM E_SDN.DGN 02/2003

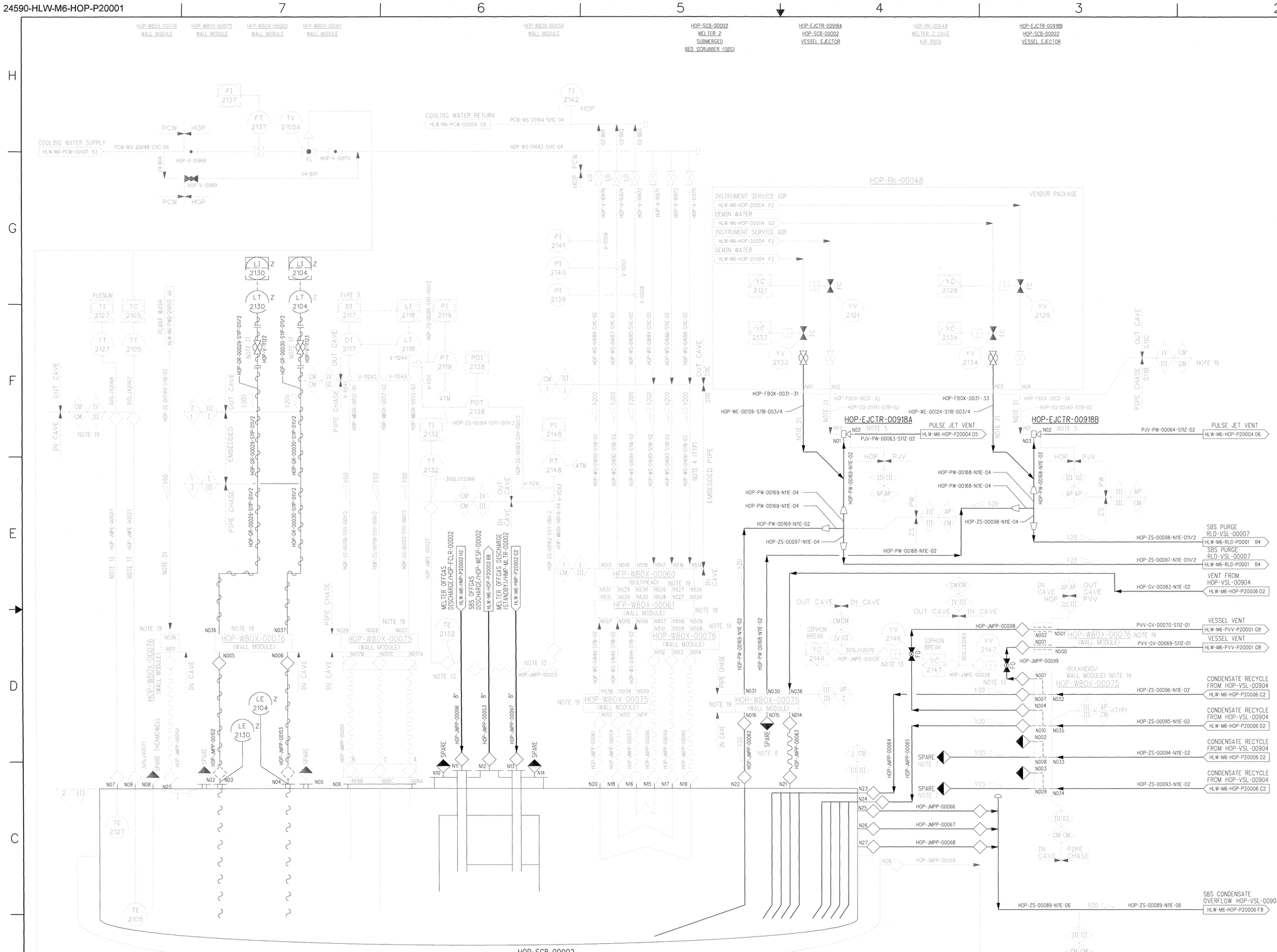

NOTES:

THE FOLLOWING NOTES ARE GENERAL NOTES FOR HOP SYSTEM.

1. SEE DRAWINGS 24590-WTP-M6-50-P0001 THROUGH 24590-WTP-M6-50-P0006 FOR GENERAL NOTES, SYMBOLS AND LEGEND.
2. DELETED.

THE FOLLOWING NOTES ARE SPECIFIC TO THIS DRAWING

3. IN VESSEL PIPE CLASS CHANGE TO N13A, HASTELLOY C-22.
4. COOLING WATER SUPPLY AND RETURN PIPES TO BE FREE DRAINING FROM OUT CAVE TO IN CAVE.
5. EJECTOR TO BE LOCATED 35' ABOVE PROCESS VESSEL OVERFLOW. EJECTOR IS QUALITY LEVEL AP AND SEISMIC CATEGORY III.
6. DELETED.
7. SPARE JUMPER CONNECTION TO HOP-SCB-00002, NOZZLE N23 OR N24.
8. SPARE JUMPER CONNECTION FOR HOP-SCB-00002, N22.
9. DELETED.
10. DELETED.
11. NOT USED.
12. DELETED.
13. DELETED.
14. NOT USED.
15. CONTENTS OF THIS DOCUMENT ARE DANGEROUS WASTE PERMIT AFFECTING.
16. VESSEL HOP-SCB-00002 IS QUALITY LEVEL QL-2 AND SEISMIC CATEGORY SC-III.
17. RADAR GUIDE TUBE IS TO BE ROUTED TO TRANSMITTER. A FULL PORT BALL VALVE IS REQUIRED FOR ISOLATION PURPOSES AT TRANSMITTER END OF GUIDE TUBE.
18. DELETED.
19. JOGGLED PENETRATIONS AND WALL MODULES INCLUDING INTERNAL PIPING ARE QUALITY LEVEL 1 AND SEISMIC CATEGORY I. BULKHEAD STRUCTURES ARE QUALITY LEVEL 2 AND SEISMIC CATEGORY II. SERVICE PIPING WITHIN THE BULKHEAD IS COMMERICAL GRADE AND SEISMIC CATEGORY III.
20. THE IN CAVE PIPING IS QUALITY LEVEL 2 AND SEISMIC CATEGORY III. EMBEDDED PIPING IS QUALITY LEVEL 1 AND SEISMIC CATEGORY I.
21. THIS LINE IS QUALITY LEVEL CM AND SEISMIC CATEGORY III.
22. THE PORTIONS OF THIS DRAWING SHOWN IN PHANTOM ARE CONSIDERED NON-PERMIT AFFECTING AND ARE NOT SUBJECT TO THE REGULATORY REQUIREMENTS OF THE WAC CODE FOR THE DANGEROUS WASTE PERMIT TO THE EXTENT THAT THOSE PORTIONS DO NOT IMPACT DANGEROUS WASTE AREAS/OPERATIONS.
23. REVISED QUALITY LEVELS & SEISMIC CATEGORIES; INCORPORATED WALL MODULE DESIGN. UPDATED VALVES, UPDATED IN-CELL PIPE CLASS, AND UPDATED NOZZLE AND LINE NUMBERS.

REFERENCES:

1. 24590-HLW-M5-V17T-P20003, "PROCESS FLOW DIAGRAM, HLW VIT MELTER 2 PRIMARY OFFGAS TREATMENT" (SYSTEM HOP).

ERIC B. ISAKSEN, STATE OF WASHINGTON, REG. 33449, PROFESSIONAL ENGINEER — 3/30/05 — EXPIRES 07/09/05

PLEASE NOTE THAT SOURCE, SPECIAL NUCLEAR AND BYPRODUCT MATERIALS, AS DEFINED IN THE ATOMIC ENERGY ACT OF 1954 (AEA), ARE REGULATED AT THE U.S. DEPARTMENT OF ENERGY (DOE) FACILITIES EXCLUSIVELY BY DOE ACTING PURSUANT TO ITS AEA AUTHORITY. DOE ASSERTS, THAT PURSUANT TO THE AEA, IT HAS SOLE AND EXCLUSIVE RESPONSIBILITY AND AUTHORITY TO REGULATE SOURCE, SPECIAL NUCLEAR, AND BYPRODUCT MATERIAL AT DOE-OWNED NUCLEAR FACILITIES. INFORMATION CONTAINED HEREIN ON RADIONUCLIDES IS PROVIDED FOR PROCESS DESCRIPTION PURPOSES ONLY.

Q — QUALITY DESIGNATOR

REVISION HISTORY

REV	DESCRIPTION	ORG	CHKD	RVWD	APVD	DATE
1	MAJOR REVISION SEE NOTE 23, ISSUED FOR PERMITTING USE		SSC		TV	3-30-05
0	ISSUED FOR PERMITTING USE	JM	YM	MY	TV	3-31-04

ISSUED BY RPP-WTP PDC

PROJECT No.	24590
SITE	HANFORD
AREA	200E
ISSUE STAMP	BUILDING No. 30

	BY	DATE
ORIGINATOR	KEITH EBBERS	10-9-02
CHECKER	R. BULLOCK	10-9-02
APPROVER	GM DUNCAN	10-10-02
REVIEWER	N/A	

CONTENT APPLICABLE TO ALARA? [X] YES [ ] NO
ADR NO. N/A REV:

BECHTEL

RIVER PROTECTION PROJECT
WASTE TREATMENT PLANT
2435 STEVENS CENTER PLACE
RICHLAND, WA 99352

CONTRACT No: DE-AC27-01RV14136

P&ID - HLW
MELTER OFFGAS SYSTEM
MELTER 2
PRIMARY OFFGAS SCRUBBER

SCALE: NONE

24590-HLW-M6-HOP-P20001

REV 1

R10523692

03/29/2005 01:22:33 PM

PLOTTED BY: eewebb
C:\Work\pmd50\70\HLW\M6\HOP\P20001.dgn

FORM E_SDN.DGN 02/2003

'E' SIZE - 44x34
COMPUTER GENERATED - MANUAL CHANGES NOT PERMITTED

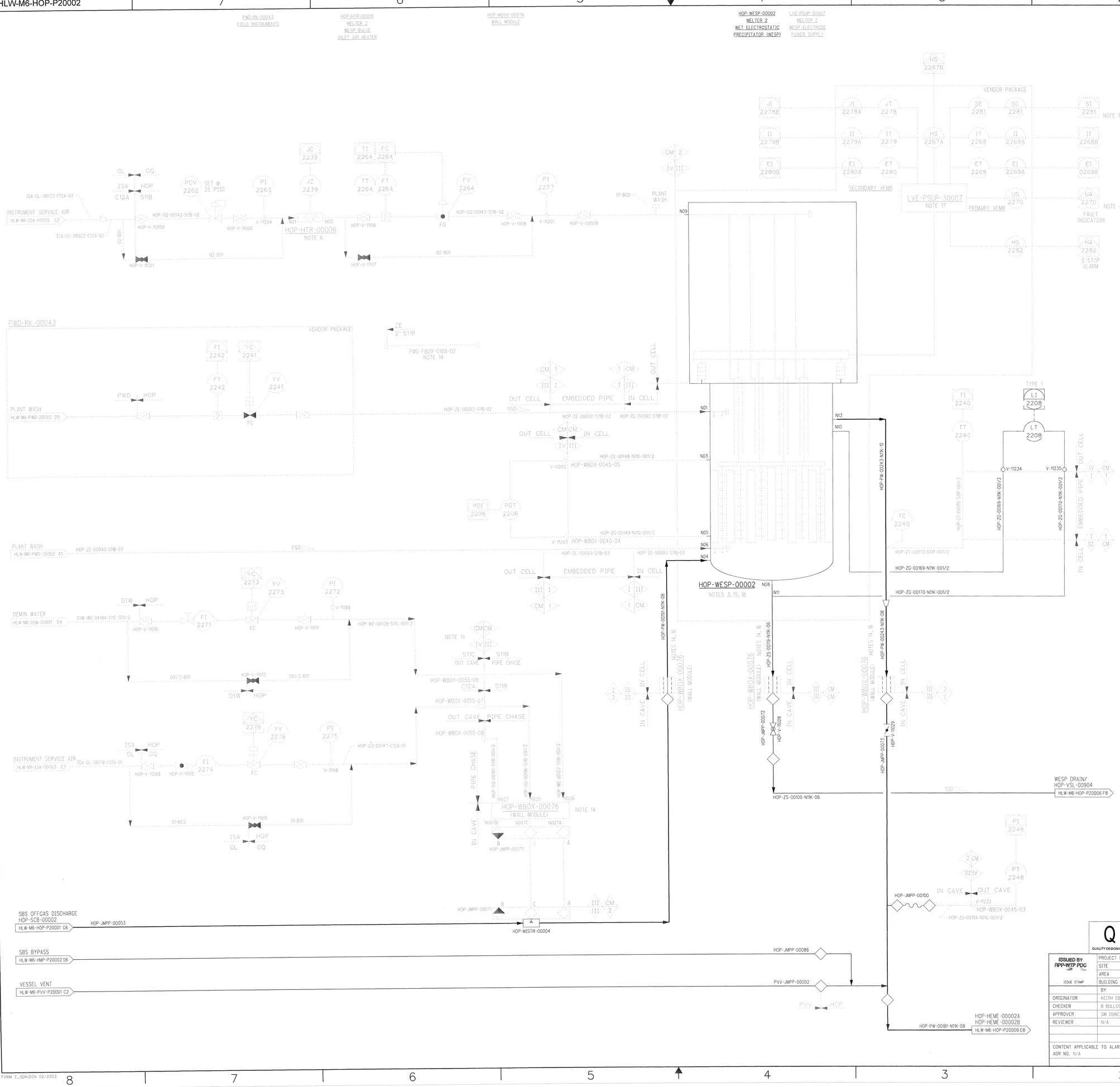

NOTES:

THE FOLLOWING NOTES ARE GENERAL NOTES FOR HOP SYSTEM.

1. SEE DRAWINGS 24590-WTP-M6-50-P0001 THROUGH 24590-WTP-M6-50-P0006 FOR GENERAL NOTES, SYMBOLS AND LEGEND.
2. DELETED.

THE FOLLOWING NOTES ARE SPECIFIC TO THIS DRAWING

3. REFER TO ENGINEERING SPECIFICATION 24590-WTP-3PS-MV00-TP001 FOR VESSEL NOZZLE LOADS.
4. POWER CONTROLLER MALFUNCTION INDICATOR INCLUDES THE FOLLOWING ALARMS: GROUND FAULT, XFMR HIGH TEMPERATURE, HIGH OIL TEMPERATURE, HIGH OIL PRESSURE, POWER SUPPLY TRIP, SECONDARY AMPS HIGH, SECONDARY VOLTAGE LOW, SPARK RATE HIGH AND COMMUNICATION FAILURE.
5. DELETED.
6. HEATER UNIT SHALL BE EQUIPPED WITH OVER-TEMPERATURE PROTECTION (SUPPLIED BY VENDOR).
7. NOT USED.
8. DELETED.
9. CONTENTS OF THIS DOCUMENT ARE DANGEROUS WASTE PERMIT AFFECTING.
10. POWER SUPPLY SPARK RATE FREQUENCY IS AUTOMATICALLY CONTROLLED AND MONITORED BY ICN.
11. DELETED.
12. DELETED.
13. DELETED.
14. JOGGLED PENETRATIONS AND WALL MODULES INCLUDING INTERNAL PIPING ARE QUALITY LEVEL 1 AND SEISMIC CATEGORY I. BULKHEAD STRUCTURES ARE QUALITY LEVEL 2 AND SEISMIC CATEGORY II. SERVICE PIPING WITHIN THE BULKHEAD IS COMMERCIAL GRADE AND SEISMIC CATEGORY III.
15. INSTRUMENTATION FOR HOP-WESP-00002 ARE COMMERCIAL QUALITY AND SEISMIC CATEGORY IV. WESP VESSEL IS QUALITY LEVEL QL-2 AND SEISMIC CATEGORY IS SC-III.
16. SLEEVED PIPE IS INDICATED BY TWO DASHED LINES SURROUNDING A PIPELINE. SLOPE SLEEVE INTO CAVE WITH SAME SLOPE AS PIPELINE.
17. THE WESP POWER SUPPLY IS QUALITY LEVEL AP AND SEISMIC CATEGORY III.
18. WESP VESSEL IS LOCATED IN ACTIVE SERVICES CELL.
19. THE PORTIONS OF THIS DRAWING SHOWN IN PHANTOM ARE CONSIDERED NON-PERMIT AFFECTING AND ARE NOT SUBJECT TO THE REGULATORY REQUIREMENTS OF THE WAC CODE FOR THE DANGEROUS WASTE PERMIT TO THE EXTENT THAT THOSE PORTIONS DO NOT IMPACT DANGEROUS WASTE AREAS/OPERATIONS.
20. REVISED QUALITY LEVELS & SEISMIC CATEGORIES, INCORPORATED WALL MODULE DESIGN, UPDATED VALVES, UPDATED UTILITIES, AND UPDATED IN-CELL PIPE CLASS.

REFERENCES:

1. 24590-HLW-M5-V17T-P20003, "PROCESS FLOW DIAGRAM, HLW VIT MELTER 2 PRIMARY OFFGAS TREATMENT" (SYSTEM HOP).

ERIC B. ISEN
STATE OF WASHINGTON
33449
REGISTERED PROFESSIONAL ENGINEER
3/30/05
EXPIRES: 07/28/05

PLEASE NOTE THAT SOURCE, SPECIAL NUCLEAR AND BYPRODUCT MATERIALS, AS DEFINED IN THE ATOMIC ENERGY ACT OF 1954 (AEA), ARE REGULATED AT THE U.S. DEPARTMENT OF ENERGY (DOE) FACILITIES EXCLUSIVELY BY DOE ACTING PURSUANT TO ITS AEA AUTHORITY. DOE ASSERTS, THAT PURSUANT TO THE AEA, IT HAS SOLE AND EXCLUSIVE RESPONSIBILITY AND AUTHORITY TO REGULATE SOURCE, SPECIAL NUCLEAR, AND BYPRODUCT MATERIAL AT DOE-OWNED NUCLEAR FACILITIES. INFORMATION CONTAINED HEREIN ON RADIONUCLIDES IS PROVIDED FOR PROCESS DESCRIPTION PURPOSES ONLY.

Q
QUALITY DESIGNATOR

REV	DESCRIPTION	ORG	CHKD	RVWD	APVD	DATE
1	MAJOR REVISION, SEE NOTE 20 ISSUED FOR PERMITTING USE	JM	SSC	SJC	TV	3-30-05
0	ISSUED FOR PERMITTING USE	JM	YM	SJC	TV	9-1-04

REVISION HISTORY

ISSUED BY RPP-WTP PDC
ISSUE STAMP

PROJECT No.	24590	
SITE	HANFORD	
AREA	200E	
BUILDING No.	30	
	BY	DATE
ORIGINATOR	KEITH EBBERS	10/09/02
CHECKER	B BULLOCK	10/09/02
APPROVER	GM DUNCAN	10/10/02
REVIEWER	N/A	

CONTENT APPLICABLE TO ALARA? [X] YES [ ] NO
ADR NO. N/A REV:

BECHTEL

RIVER PROTECTION PROJECT
WASTE TREATMENT PLANT
2435 STEVENS CENTER PLACE
RICHLAND, WA 99352

CONTRACT No: DE-AC27-01RV14136

P&ID - HLW
MELTER OFFGAS SYSTEM
MELTER 2
PRIMARY OFFGAS WESP

SCALE: NONE

24590-HLW-M6-HOP-P20002

REV 1

R10023890

'E' SIZE - 44x34
COMPUTER GENERATED - MANUAL CHANGES NOT PERMITTED

FORM E_SDN.DGN 02/2003

03/29/2005 01:25:14 PM

PLOTTED BY: eeastb
C:\Work\dms05070\HLW\M6\HOP\P20002r1.dgn

24590-HLW-M6-HOP-P20003

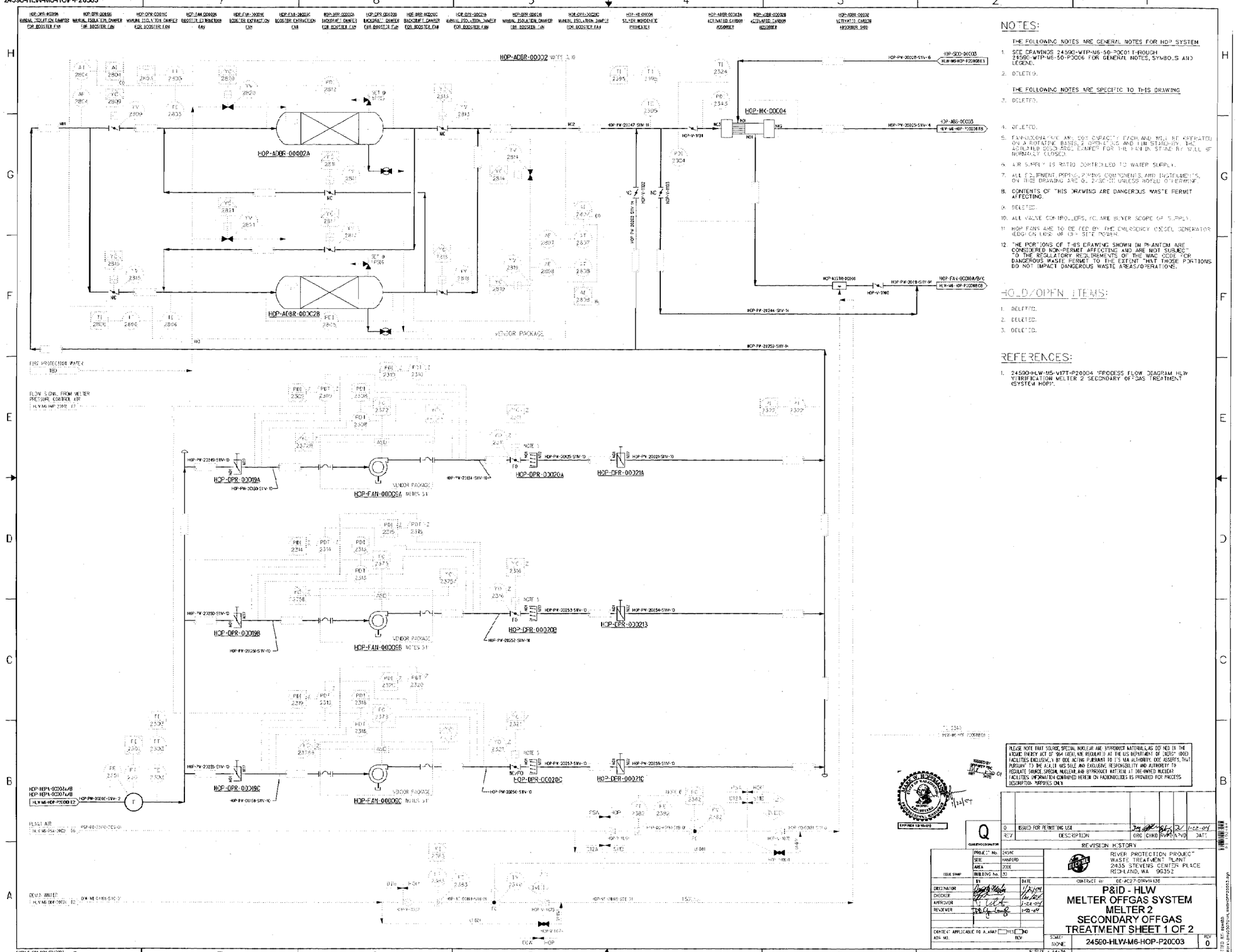

NOTES:

THE FOLLOWING NOTES ARE GENERAL NOTES FOR HOP SYSTEM

1. SEE DRAWINGS 24590-WTP-M6-50-P0001 THROUGH 24590-WTP-M6-50-P0006 FOR GENERAL NOTES, SYMBOLS AND LEGEND.
2. DELETED.

THE FOLLOWING NOTES ARE SPECIFIC TO THIS DRAWING

3. DELETED.
4. DELETED.
5. FAN-00005A/B/C ARE 50% CAPACITY EACH AND WILL BE OPERATED ON A ROTATING BASIS, 2 OPERATING AND 1 IN STANDBY. THE ACTUATED DISCHARGE DAMPER FOR THE FAN IN STANDBY WILL BE NORMALLY CLOSED.
6. AIR SUPPLY IS RATIO CONTROLLED TO WATER SUPPLY.
7. ALL EQUIPMENT, PIPING, PIPING COMPONENTS, AND INSTRUMENTS, ON THIS DRAWING ARE Q, 2/3/C/D UNLESS NOTED OTHERWISE.
8. CONTENTS OF THIS DRAWING ARE DANGEROUS WASTE PERMIT AFFECTING.
9. DELETED.
10. ALL VALVE CONTROLLERS, FC, ARE BUYER SCOPE OF SUPPLY.
11. HOP FANS ARE TO BE FED BY THE EMERGENCY DIESEL GENERATOR (EDG) ON LOSS OF OFF-SITE POWER.
12. THE PORTIONS OF THIS DRAWING SHOWN IN PHANTOM ARE CONSIDERED NON-PERMIT AFFECTING AND ARE NOT SUBJECT TO THE REGULATORY REQUIREMENTS OF THE WAC CODE FOR DANGEROUS WASTE PERMIT TO THE EXTENT THAT THOSE PORTIONS DO NOT IMPACT DANGEROUS WASTE AREAS/OPERATIONS.

HOLD/OPEN ITEMS:

1. DELETED.
2. DELETED.
3. DELETED.

REFERENCES:

1. 24590-HLW-M5-V17T-P20004 "PROCESS FLOW DIAGRAM HLW VITRIFICATION MELTER 2 SECONDARY OFFGAS TREATMENT (SYSTEM HOP)".

PLEASE NOTE THAT SOURCE, SPECIAL NUCLEAR AND BYPRODUCT MATERIALS, AS DEFINED IN THE ATOMIC ENERGY ACT OF 1954 (AEA), ARE REGULATED AT THE US DEPARTMENT OF ENERGY (DOE) FACILITIES EXCLUSIVELY BY DOE ACTING PURSUANT TO ITS NRA AUTHORITY. DOE ASSERTS THAT PURSUANT TO THE AEA, IT HAS SOLE AND EXCLUSIVE RESPONSIBILITY AND AUTHORITY TO REGULATE SOURCE, SPECIAL NUCLEAR, AND BYPRODUCT MATERIAL AT DOE-OWNED NUCLEAR FACILITIES. INFORMATION CONTAINED HEREIN ON RADIONUCLIDES IS PROVIDED FOR PROCESS DESCRIPTION PURPOSES ONLY.

REV	DESCRIPTION	ORG	CHKD	RVWD	APVD	DATE
0	ISSUED FOR PERMITTING USE					1-22-04

REVISION HISTORY

Q

PROJECT No. 24590
SITE HANFORD
AREA 200E
BUILDING No. 32

	BY	DATE
DESIGNATOR		1/21/04
CHECKER		1/21/04
APPROVER		1-22-04
REVIEWER		1-22-04

CONTENT APPLICABLE TO A/E AWP? YES NO
ASB NO. REV

RIVER PROTECTION PROJECT
WASTE TREATMENT PLANT
2435 STEVENS CENTER PLACE
RICHLAND, WA 99352

CONTRACT NO DE-AC27-01RV14136

P&I D - HLW MELTER OFFGAS SYSTEM MELTER 2 SECONDARY OFFGAS TREATMENT SHEET 1 OF 2

SCALE NONE

24590-HLW-M6-HOP-P20003

REV 0

8" SIZE - 44x34
COMPUTER GENERATED - MANUAL CHANGES NOT PERMITTED

09/27/2004 03:32:05 PM

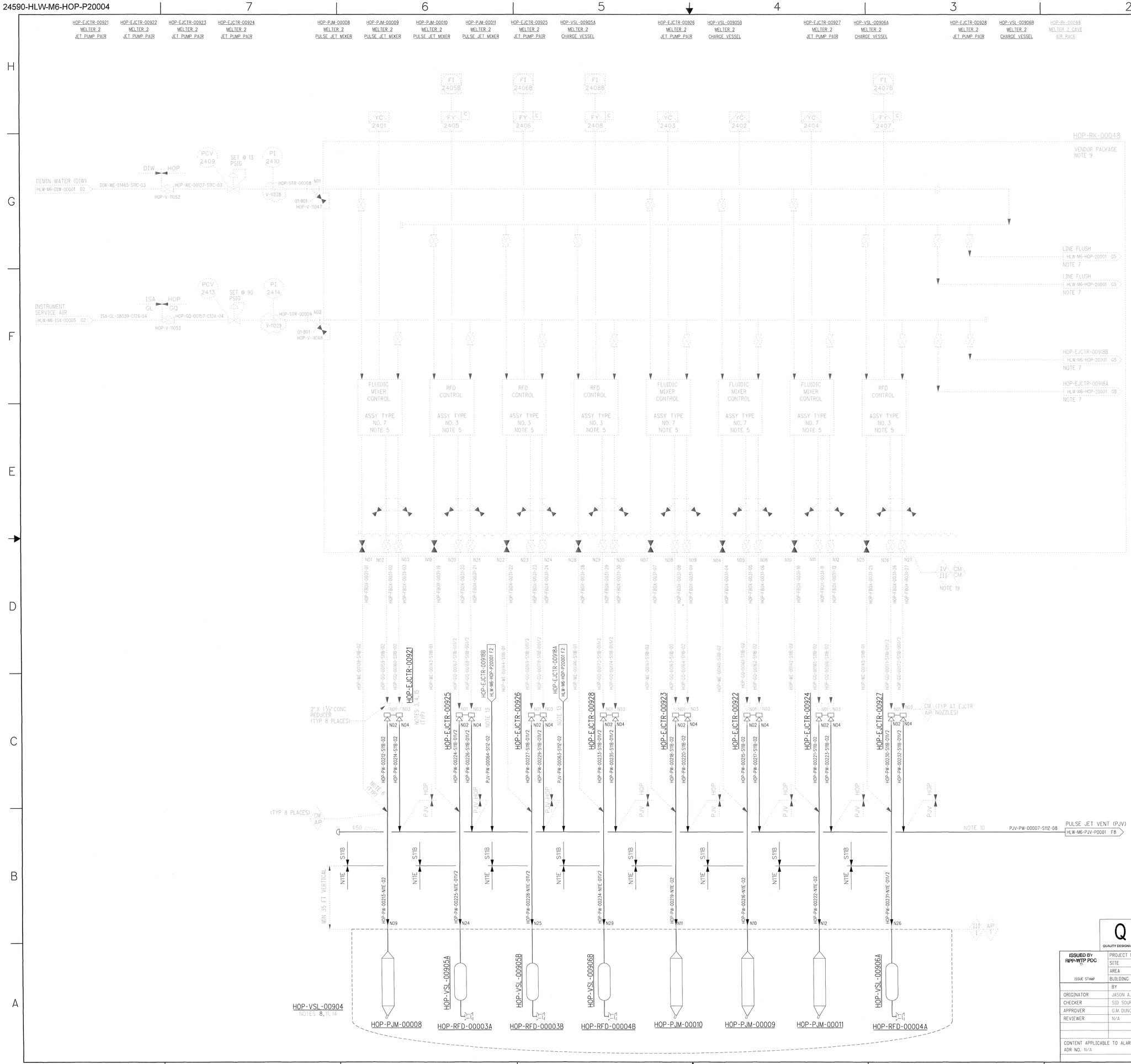

NOTES:

THE FOLLOWING NOTES ARE GENERAL NOTES FOR THE HOP SYSTEM.

1. SEE DRAWING 24590-WTP-M6-50-P0001 THROUGH 24590-WTP-M6-50-P0006 FOR GENERAL NOTES, SYMBOLS AND LEGEND.
2. DELETED.

THE FOLLOWING NOTES ARE SPECIFIC TO THIS DRAWING.

3. ALL JET PUMP PAIRS HAVE A MINIMUM VERTICAL DISTANCE OF 35 FEET ABOVE THE PROCESS VESSEL NOZZLES. AIR PIPING LENGTH FROM JET PUMP PAIRS DRIVE AIR OUTLET NOZZLE TO PULSE JET MIXER OR REVERSE FLOW DIVERTER INLET NOZZLE, TO BE A MAXIMUM OF 100 FEET.
4. ALL JET PUMP PAIRS ARE TO BE POSITIONED VERTICALLY.
5. FLUIDICS CONTROLLER DETAIL SHOWN ON "P&ID SYMBOLS AND LEGEND SHEET 6 OF 6 24590-WTP-M6-50-P0006".
6. A LATERAL FITTING IS TO BE USED AT THIS LOCATION TO ACCOMMODATE CLEANING OF PIPE AND EQUIPMENT.
7. PORTION OF HOP-RK-00048 IS LOCATED ON 24590-HLW-M6-HOP-P20001.
8. FOR VESSEL DETAILS SEE DRAWING 24590-HLW-M6-HOP-P20006.
9. INTERNAL RACK CONFIGURATION IS SUBJECT TO OPTIMIZATION OF PIPE LAYOUT.
10. THIS LINE IS QUALITY LEVEL AP AND SEISMIC CATEGORY III.
11. VESSEL HOP-VSL-00904 IS PROCURED SEISMIC CATEGORY I AND QUALITY LEVEL 1 FOR IMPROVED RELIABILITY. THE EQUIPMENT IS SEISMIC CATEGORY III AND QUALITY LEVEL 2 PER SAFETY FUNCTION AND AUTHORIZATION BASIS (PSAR). RFDs ARE QUALITY LEVEL "CM".
12. CONTENTS OF THIS DOCUMENT ARE DANGEROUS WASTE PERMIT AFFECTING.
13. THIS LINE IS QUALITY LEVEL 2 AND SEISMIC CATEGORY III.
14. REFER TO ENGINEERING SPECIFICATION 24590-WTP-3PS-MV00-T0P001 FOR VESSEL NOZZLE LOADS.
15. ALL JET PUMP PAIRS ARE SEISMIC CATEGORY III AND AP QUALITY.
16. DELETED.
17. NOT USED.
18. DELETED.
19. JOGGLED PENETRATIONS SHALL BE DESIGNED TO QL-1/SC-1 CRITERIA.
20. SLOPE FOR LINES WITH FLUID CODE OF 'WE' AND 'PW' IN CELL AND OUT CELL SHALL BE MINIMUM OF 1:200, UNLESS NOTED OTHERWISE.
21. THE PORTIONS OF THIS DRAWING SWHOWN IN PHANTOM ARE CONSIDERED NON-PERMIT AFFECTING AND ARE NOT SUBJECT TO THE REGULATORY REQUIREMENTS OF THE WAC CODE FOR THE CANGEROUS WASTE PERMIT TO THE EXTENT THAT THOSE PORTIONS DO NOT IMPACT DANGEROUS WASTE AREAS/OPERATIONS.
22. REVISED QUALITY LEVELS, CHANGED FLOORBOX TO JOGGLED PENETRATION, U7PDATED LINE SIZES, UPDATED VALVES AND UTILITIES, ADDED REDUCERS, AND REORGANIZED ORDER OF ENTRY INTO VENT.

HOLD/OPEN ITEMS:

1. THIS LINE IS RELEASED FOR ENGINEERING AND DESIGN ONLY. THIS LINE IS ON HOLD FOR PROCUREMENT OF MATERIALS OR ITEMS, FABRICATION, TESTING, DELIVERY, INSTALLATION OR CONSTRUCTION PENDING APPROVAL OF ABAR.

REFERENCES:

1. 24590-HLW-M5-V17T-P20003, "PROCESS FLOW DIAGRAM, HLW VIT MELTER 2 PRIMARY OFFGAS TREATMENT" (SYSTEM HOP).

ERIC B. ISERN, STATE OF WASHINGTON, 33449, REGISTERED PROFESSIONAL ENGINEER
3/30/05
EXPIRES: 07/28/05

PLEASE NOTE THAT SOURCE, SPECIAL NUCLEAR AND BYPRODUCT MATERIALS, AS DEFINED IN THE ATOMIC ENERGY ACT OF 1954 (AEA), ARE REGULATED AT THE U.S. DEPARTMENT OF ENERGY (DOE) FACILITIES EXCLUSIVELY BY DOE ACTING PURSUANT TO ITS AEA AUTHORITY. DOE ASSERTS, THAT PURSUANT TO THE AEA, IT HAS SOLE AND EXCLUSIVE RESPONSIBILITY AND AUTHORITY TO REGULATE SOURCE, SPECIAL NUCLEAR, AND BYPRODUCT MATERIAL AT DOE-OWNED NUCLEAR FACILITIES. INFORMATION CONTAINED HEREIN ON RADIONUCLIDES IS PROVIDED FOR PROCESS DESCRIPTION PURPOSES ONLY.

REV	DESCRIPTION	ORG	CHKD	RVWD	APVD	DATE
1	MAJOR REVISION, SEE NOTE 22 ISSUED FOR PERMITTING USE	JM	STC	CJ	TV	3-30-05
0	ISSUED FOR PERMITTING USE	JM	AC	DMY	TV	10-1-03

REVISION HISTORY

Q
QUALITY DESIGNATOR

ISSUED BY RPP-WTP PDC

PROJECT No.	24590
SITE	HANFORD
AREA	200E
BUILDING No.	30

ISSUE STAMP

	BY	DATE
ORIGINATOR	JASON A. MEDINA	10-09-02
CHECKER	SID SOURANI	10-09-02
APPROVER	G.M. DUNCAN	10-10-02
REVIEWER	N/A	

CONTENT APPLICABLE TO ALARA? [X] YES [ ] NO
ADR NO. N/A REV:

BECHTEL

RIVER PROTECTION PROJECT
WASTE TREATMENT PLANT
2435 STEVENS CENTER PLACE
RICHLAND, WA 99352

CONTRACT No: DE-AC27-01RV14136

P&ID - HLW MELTER 2 OFFGAS FLUIDIC AIR RACK HOP-RK-00048

SCALE: NONE

24590-HLW-M6-HOP-P20004

REV 1

R10523689

"E" SIZE - 44x34
COMPUTER GENERATED - MANUAL CHANGES NOT PERMITTED

FORM E_SDN.DGN 02/2003

03/29/2005 01:26:24 PM
PLOTTED BY: ewenzo
C:\Work\pnnl35070\HLW\6HOP\P20004-r1.dgn

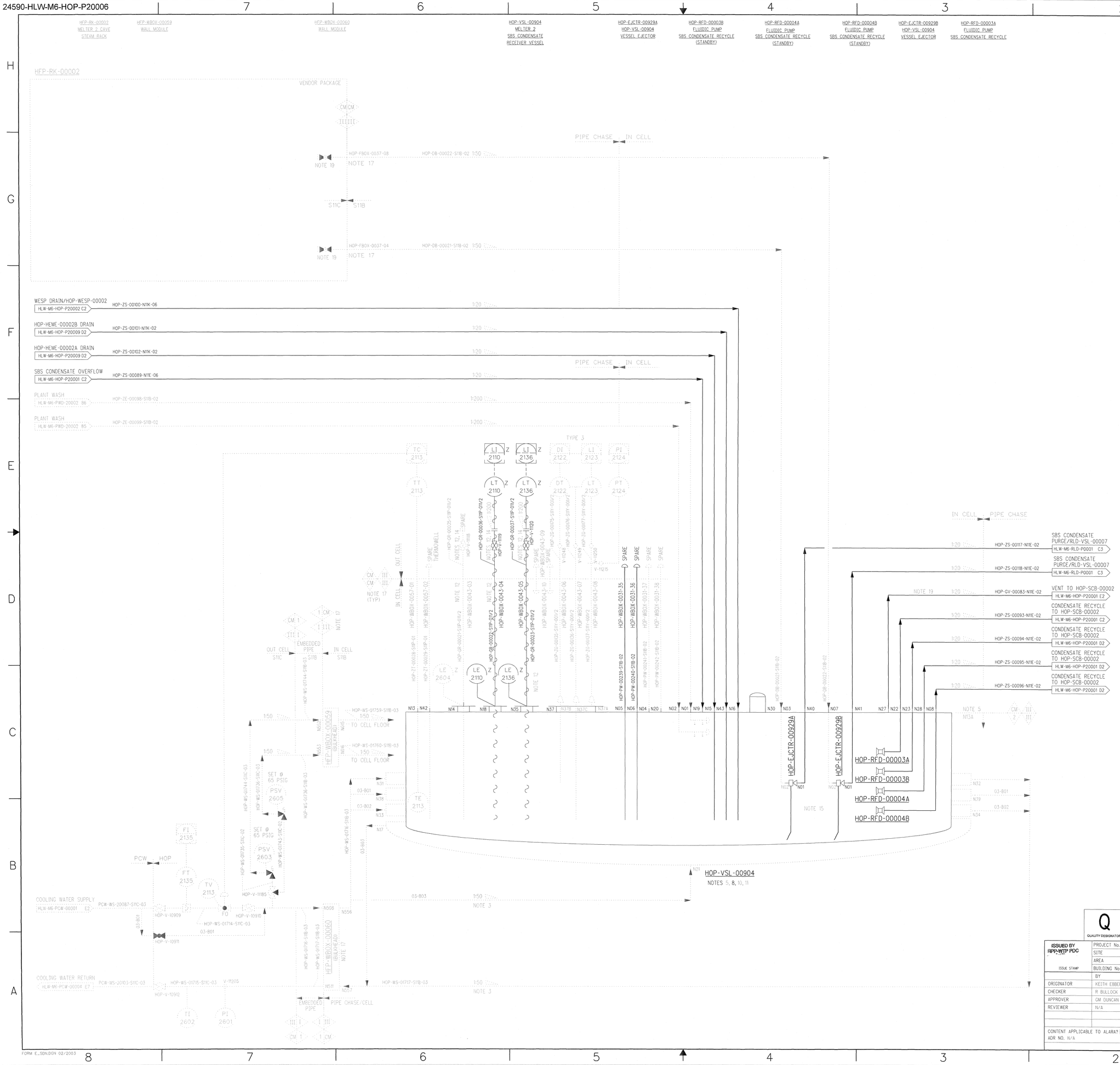

NOTES:

THE FOLLOWING NOTES ARE GENERAL NOTES FOR HOP SYSTEM

1. SEE DRAWINGS 24590-WTP-M6-50-P0001 THROUGH 24590-WTP-M6-50-P0006 FOR GENERAL NOTES, SYMBOLS AND LEGEND.
2. DELETED.

THE FOLLOWING NOTES ARE SPECIFIC TO THIS DRAWING.

3. COOLING WATER SUPPLY AND RETURN PIPES TO SLOPE FROM WALLBOX LOCATED ABOVE PROCESS VESSEL.
4. STRAINER AND/OR MANUAL VALVE(S) REFERRING TO THIS NOTE ARE COMMERCIAL GRADE QUALITY. ADDITIONAL QUALITY LEVEL REQUIREMENTS WILL BE IMPOSED DUE TO INSTALLATION IN SEISMIC CATEGORY I PIPING.
5. IN VESSEL PIPE CLASS CHANGE TO N13A, HASTELLOY C-22.
6. DELETED.
7. NOT USED.
8. SEE 24590-HLW-M6-HOP-P20004 FOR DETAILS ON PULSE JET MIXER AND CHARGE VESSELS.
9. CONTENTS OF THIS DRAWING ARE DANGEROUS WASTE PERMIT AFFECTING.
10. VESSEL HOP-VSL-00904 IS PROCURED SEISMIC CATEGORY I AND QUALITY LEVEL 1 FOR IMPROVED RELIABILITY.
11. REFER TO ENGINEERING SPECIFICATION 24590-WTP-3PS-MV00-TP001 FOR VESSEL NOZZLE LOADS.
12. THIS LINE IS QUALITY LEVEL 2 AND SEISMIC CATEGORY III.
13. DELETED.
14. RADAR GUIDE TUBE IS TO BE ROUTED TO TRANSMITTER. A FULL PORT BALL VALVE IS REQUIRED FOR ISOLATION PURPOSES AT TRANSMITTER END OF GUIDE TUBE.
15. EJECTORS AND RFD'S INSIDE VESSEL ARE COMMERCIAL QUALITY AND SEISMIC CATEGORY III.
16. DELETED.
17. JOGGLED PENETRATIONS AND WALL MODULES INCLUDING INTERNAL PIPING ARE QUALITY LEVEL 1 AND SEISMIC CATEGORY I. BULKHEAD STRUCTURES ARE QUALITY LEVEL 2 AND SEISMIC CATEGORY II. SERVICE PIPING WITHIN THE BULKHEAD IS COMMERCIAL GRADE AND SEISMIC CATEGORY III.
18. DELETED.
19. THIS LINE IS QUALITY LEVEL AP AND SEISMIC CATEGORY III.
20. THE PORTIONS OF THIS DRAWING SHOWN IN PHANTOM ARE CONSIDERED NON-PERMIT AFFECTING AND ARE NOT SUBJECT TO THE REGULATORY REQUIREMENTS OF THE WAC CODE FOR THE DANGEROUS WASTE PERMIT TO THE EXTENT THAT THOSE PORTIONS DO NOT IMPACT DANGEROUS WASTE AREAS/OPERATIONS.
21. REVISED QUALITY LEVELS & SEISMIC CATEGORIES, INCORPORATED WALL MODULE DESIGN, ADDED DUAL PSVs, UPDATED VALVES, AND UPDATED IN-CELL PIPE CLASS.

REFERENCES:

1. 24590-HLW-M5-V17T-P20003, "PROCESS FLOW DIAGRAM, HLW VIT MELTER 2 PRIMARY OFFGAS TREATMENT" (SYSTEM HOP).

ERIC B. IVERSON, STATE OF WASHINGTON, 33449, REGISTERED PROFESSIONAL ENGINEER, 3/30/05
EXPIRES: 07/28/05

PLEASE NOTE THAT SOURCE, SPECIAL NUCLEAR AND BYPRODUCT MATERIALS, AS DEFINED IN THE ATOMIC ENERGY ACT OF 1954 (AEA), ARE REGULATED AT THE U.S. DEPARTMENT OF ENERGY (DOE) FACILITIES EXCLUSIVELY BY DOE ACTING PURSUANT TO ITS AEA AUTHORITY. DOE ASSERTS, THAT PURSUANT TO THE AEA, IT HAS SOLE AND EXCLUSIVE RESPONSIBILITY AND AUTHORITY TO REGULATE SOURCE, SPECIAL NUCLEAR, AND BYPRODUCT MATERIAL AT DOE-OWNED NUCLEAR FACILITIES. INFORMATION CONTAINED HEREIN ON RADIONUCLIDES IS PROVIDED FOR PROCESS DESCRIPTION PURPOSES ONLY.

Q — QUALITY DESIGNATOR

REVISION HISTORY

REV	DESCRIPTION	ORG	CHKD	RVWD	APVD	DATE
1	MAJOR REVISION, SEE NOTE 21 ISSUED FOR PERMITTING USE		SBC		TV	3-30-05
0	ISSUED FOR PERMITTING USE	JM	AC	DMY	TV	10-1-03

ISSUED BY RPP-WTP PDC — ISSUE STAMP

PROJECT No.	24590
SITE	HANFORD
AREA	200E
BUILDING No.	30

	BY	DATE
ORIGINATOR	KEITH EBBERS	10/09/02
CHECKER	R BULLOCK	10/09/02
APPROVER	GM DUNCAN	10/10/02
REVIEWER	N/A	

CONTENT APPLICABLE TO ALARA? [X] YES [ ] NO
ADR NO. N/A REV:

BECHTEL

RIVER PROTECTION PROJECT
WASTE TREATMENT PLANT
2435 STEVENS CENTER PLACE
RICHLAND, WA 99352

CONTRACT No: DE-AC27-01RV14136

P&ID - HLW MELTER OFFGAS SYSTEM MELTER 2 PRIMARY OFFGAS SCRUBBER CONDENSATE VESSEL

SCALE: NONE

24590-HLW-M6-HOP-P20006

REV 1

'E' SIZE - 44x34
COMPUTER GENERATED - MANUAL CHANGES NOT PERMITTED

R10523688

03/29/2005 01:27:34 PM

PLOTTED BY: ewebb
C:\Work\dms05070\HLW\BH\HOP\20006r1.dgn

FORM E_SDN.DGN 02/2003

24590-HLW-M6-HOP-P20008

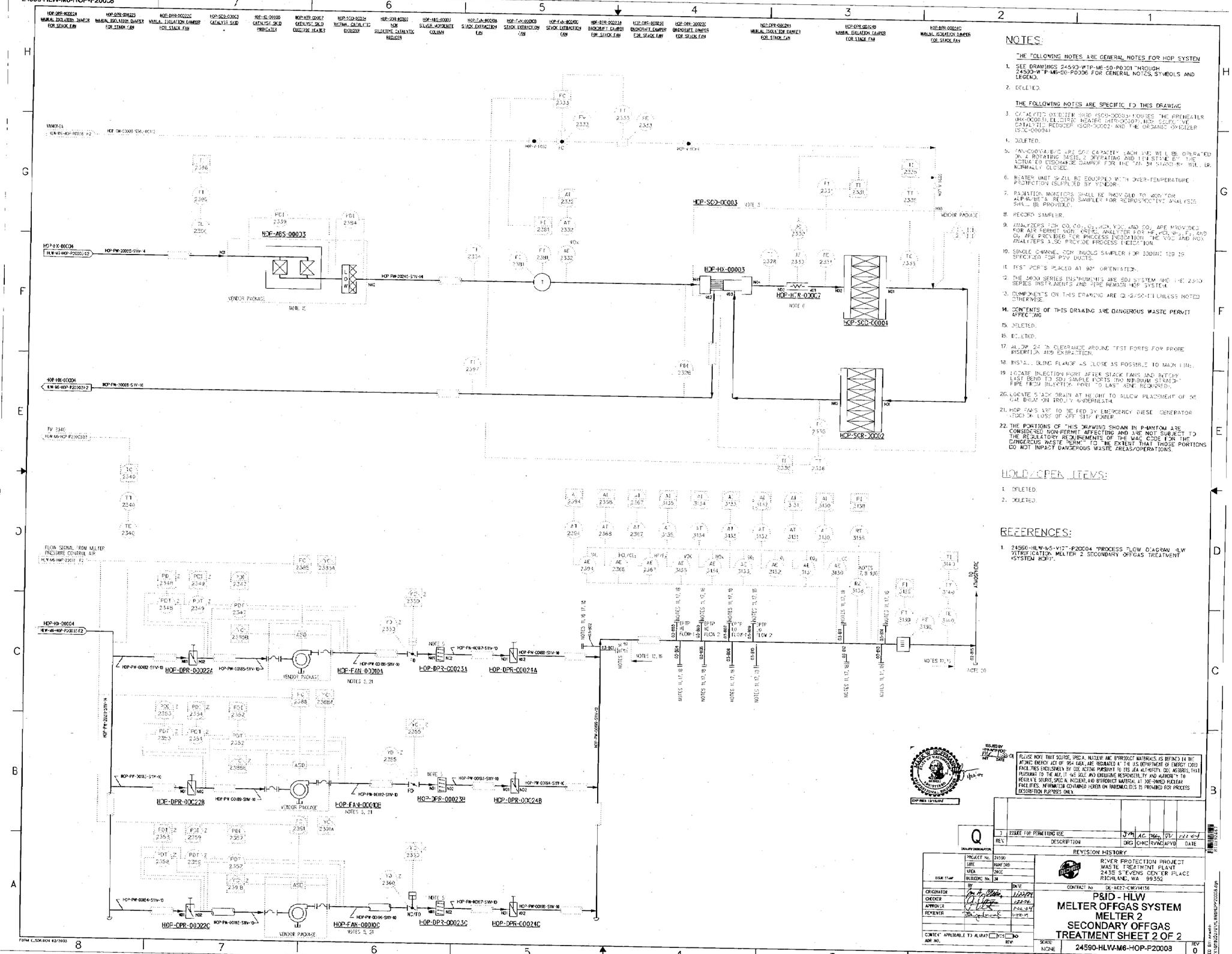

NOTES:

THE FOLLOWING NOTES ARE GENERAL NOTES FOR HOP SYSTEM

1. SEE DRAWINGS 24590-WTP-M6-S0-P0301 THROUGH 24590-WTP-M6-S0-P0306 FOR GENERAL NOTES, SYMBOLS AND LEGEND.
2. DELETED.

THE FOLLOWING NOTES ARE SPECIFIC TO THIS DRAWING

3. CATALYTIC OXIDIZER SKID (SCO-00003) INCLUDES THE PREHEATER (HX-00005), ELECTRIC HEATER (HTR-00007), NOX SELECTIVE CATALYTIC REDUCER (SCR-00002) AND THE ORGANIC OXIDIZER (SCO-00004).
4. DELETED.
5. FAN-00006A/B/C ARE 50% CAPACITY. EACH FAN WILL BE OPERATED ON A ROTATING BASIS, 2 OPERATING AND 1 IN STANDBY. THE ACTUATED DISCHARGE DAMPER FOR THE FAN IN STANDBY WILL BE NORMALLY CLOSED.
6. HEATER UNIT SHALL BE EQUIPPED WITH OVER-TEMPERATURE PROTECTION (SUPPLIED BY VENDOR).
7. RADIATION MONITORS SHALL BE PROVIDED TO MONITOR ALPHA/BETA RECORD SAMPLER FOR RETROSPECTIVE ANALYSIS SHALL BE PROVIDED.
8. RECORD SAMPLER.
9. ANALYZERS FOR CO_2, CO, O_2, NO_x, VOC AND SO_2 ARE PROVIDED FOR AIR PERMIT MONITORING. ANALYZER FOR HF, HCL, NH3, F2 AND Cl_2 ARE PROVIDED FOR PROCESS INDICATION. THE VOC AND NOX ANALYZERS ALSO PROVIDE PROCESS INDICATION.
10. SINGLE CHANNEL RGM INDUSTRIAL SAMPLER FOR IODINE 129 IS SPECIFIED FOR PSV DUCTS.
11. TEST PORTS PLACED AT 90° ORIENTATION.
12. THE 2000 SERIES INSTRUMENTS ARE SDJ SYSTEM AND THE 2300 SERIES INSTRUMENTS AND PIPE REMAIN HOP SYSTEM.
13. COMPONENTS ON THIS DRAWING ARE QL-24590-ITS UNLESS NOTED OTHERWISE.
14. CONTENTS OF THIS DRAWING ARE DANGEROUS WASTE PERMIT AFFECTING.
15. DELETED.
16. DELETED.
17. ALLOW 24 IN CLEARANCE AROUND TEST PORTS FOR PROBE INSERTION AND EXTRACTION.
18. INSTALL BLIND FLANGE AS CLOSE AS POSSIBLE TO MAIN LINE.
19. LOCATE INJECTION PORT AFTER STACK FANS AND BEFORE LAST BEND TO SDJ SAMPLE PORTS (DO MINIMUM STRAIGHT PIPE FROM INJECTION PORT TO LAST BEND REQUIRED).
20. LOCATE STACK DRAIN AT HEIGHT TO ALLOW PLACEMENT OF 55 GAL DRUM ON TROLLY UNDERNEATH.
21. HOP FANS ARE TO BE FED BY EMERGENCY DIESEL GENERATOR (EDG) ON LOSS OF OFF SITE POWER.
22. THE PORTIONS OF THIS DRAWING SHOWN IN PHANTOM ARE CONSIDERED NON-PERMIT AFFECTING AND ARE NOT SUBJECT TO THE REGULATORY REQUIREMENTS OF THE WAC CODE FOR THE DANGEROUS WASTE PERMIT TO THE EXTENT THAT THOSE PORTIONS DO NOT IMPACT DANGEROUS WASTE AREAS/OPERATIONS.

HOLD/OPEN ITEMS:

1. DELETED.
2. DELETED.

REFERENCES:

1. 24590-HLW-M5-V127-P20004 "PROCESS FLOW DIAGRAM - HLW VITRIFICATION MELTER 2 SECONDARY OFFGAS TREATMENT (SYSTEM HOP)".

PLEASE NOTE THAT SOURCE, SPECIAL NUCLEAR AND BYPRODUCT MATERIALS, AS DEFINED IN THE ATOMIC ENERGY ACT OF 954 (AEA), ARE REGULATED 4 THE U.S. DEPARTMENT OF ENERGY (DOE) FACILITIES EXCLUSIVELY BY DOE ACTING PURSUANT TO ITS AEA AUTHORITY. DOE ASSERTS, THAT PURSUANT TO THE AEA, IT HAS SOLE AND EXCLUSIVE RESPONSIBILITY AND AUTHORITY TO REGULATE SOURCE, SPECIAL NUCLEAR, AND BYPRODUCT MATERIAL AT DOE-OWNED NUCLEAR FACILITIES. INFORMATION CONTAINED HEREIN ON RADIOLOGICS IS PROVIDED FOR PROCESS DESCRIPTION PURPOSES ONLY.

REV	DESCRIPTION	DRG	CHKD	RVWD	APVD	DATE
0	ISSUE FOR PERMITTING USE	JM	AC			12/22/04

REVISION HISTORY

		BY	DATE
PROJECT No.	24590		
SITE	WAF080		
AREA	26CC		
BUILDING No.	38		
ORIGINATOR			12/22/04
CHECKER			12-22-04
APPROVER			12-22-04
REVIEWER			12-22-04

CONTENT APPLICABLE TO ALARA? YES NO
ADR NO. REV

RIVER PROTECTION PROJECT
WASTE TREATMENT PLANT
2435 STEVENS CENTER PLACE
RICHLAND, WA 99352

CONTRACT No DE-AC27-01RV14136

P&ID - HLW MELTER OFFGAS SYSTEM MELTER 2 SECONDARY OFFGAS TREATMENT SHEET 2 OF 2

SCALE: NONE
24590-HLW-M6-HOP-P20008
REV 0

E SIZE - 44x34
COMPUTER GENERATED - MANUAL CHANGES NOT PERMITTED

01/22/2004 09:42:21 AM

NOTES:

THE FOLLOWING NOTES ARE GENERAL NOTES FOR HOP SYSTEM

1. SEE DRAWINGS 24590-WTP-M6-50-P0001 THROUGH 24590-WTP-M6-50-P0006 FOR GENERAL NOTES, SYMBOLS AND LEGEND.
2. DELETED.

THE FOLLOWING NOTES ARE SPECIFIC TO THIS DRAWING

3. THE HEMES ARE QUALITY LEVEL QL-2 AND SEISMIC CATEGORY SC-III. EACH HEME (HOP-HEME-00002A/B) CONTAINS FIVE (5) MULTI-SECTION FILTER ELEMENTS DESIGNED FOR REMOTE REPLACEMENT
4. REFER TO ENGINEERING SPECIFICATION 24590-WTP-3PS-MV00-TP001 FOR VESSEL NOZZLE LOADS.
5. DELETED.
6. NOT USED.
7. DELETED.
8. CONTENTS OF THIS DRAWING ARE DANGEROUS WASTE PERMIT AFFECTING.
9. THE SOFTWARE FUNCTIONAL SPECIFICATION SHALL REQUIRE AT LEAST ONE HEME/HEPA OFFGAS TRAIN OPEN AT ALL TIMES.
10. DELETED.
11. DELETED.
12. DELETED.
13. DRAIN TO BE FREE FLOWING (NO VALVES) TO CONDENSATE VESSEL.
14. JOGGLED PENETRATIONS AND WALL MODULES INCLUDING INTERNAL PIPING ARE QUALITY LEVEL 1 AND SEISMIC CATEGORY I. BULKHEAD STRUCTURES ARE QUALITY LEVEL 2 AND SEISMIC CATEGORY II. SERVICE PIPING WITHIN THE BULKHEAD IS COMMERCIAL GRADE AND SEISMIC CATEGORY III.
15. DELETED.
16. THE PORTIONS OF THIS DRAWING SHOWN IN PHANTOM ARE CONSIDERED NON-PERMIT AFFECTING AND ARE NOT SUBJECT TO THE REGULATORY REQUIREMENTS OF THE WAC CODE FOR THE DANGEROUS WASTE PERMIT TO THE EXTENT THAT THOSE PORTIONS DO NOT IMPACT DANGEROUS WASTE AREAS/OPERATIONS.
17. REVISED QUALITY LEVELS & SEISMIC CATEGORIES, INCORPORATED WALL MODULE DESIGN, UPDATED UTILITIES, VALVES, AND JUMPERS, UPDATED IN-CELL PIPE CLASS.

REFERENCES:

1. 24590-HLW-M5-V17T-P20003 "PROCESS FLOW DIAGRAM, HLW VIT MELTER 2 PRIMARY OFFGAS TREATMENT" (SYSTEM HOP).

PLEASE NOTE THAT SOURCE, SPECIAL NUCLEAR AND BYPRODUCT MATERIALS, AS DEFINED IN THE ATOMIC ENERGY ACT OF 1954 (AEA), ARE REGULATED AT THE U.S. DEPARTMENT OF ENERGY (DOE) FACILITIES EXCLUSIVELY BY DOE ACTING PURSUANT TO ITS AEA AUTHORITY. DOE ASSERTS, THAT PURSUANT TO THE AEA, IT HAS SOLE AND EXCLUSIVE RESPONSIBILITY AND AUTHORITY TO REGULATE SOURCE, SPECIAL NUCLEAR, AND BYPRODUCT MATERIAL AT DOE-OWNED NUCLEAR FACILITIES. INFORMATION CONTAINED HEREIN ON RADIONUCLIDES IS PROVIDED FOR PROCESS DESCRIPTION PURPOSES ONLY.

Q
QUALITY DESIGNATOR

REV	DESCRIPTION	ORG	CHKD	RVWD	APVD	DATE
1	MAJOR REVISION, SEE NOTE 16 ISSUED FOR PERMITTING USE					3-30-05
0	ISSUED FOR PERMITTING USE	JM	YM	DMY	TV	3-31-04

REVISION HISTORY

ISSUED BY RPP-WTP PDC
ISSUE STAMP

PROJECT No.	24590	
SITE	HANFORD	
AREA	200E	
BUILDING No.	30	
	BY	DATE
ORIGINATOR	KEITH EBBERS	10/09/02
CHECKER	R. BULLOCK	10/09/02
APPROVER	GARTH DUNCAN	10/09/02
REVIEWER	N/A	

CONTENT APPLICABLE TO ALARA? [X] YES [ ] NO
ADR NO. N/A REV:

BECHTEL

RIVER PROTECTION PROJECT
WASTE TREATMENT PLANT
2435 STEVENS CENTER PLACE
RICHLAND, WA 99352

CONTRACT No: DE-AC27-01RV14136

P&ID - HLW MELTER OFFGAS SYSTEM MELTER 2 PRIMARY OFFGAS HEME

SCALE: NONE

24590-HLW-M6-HOP-P20009

REV 1

R10523687

FORM E_SDN.DGN 02/2003

"E" SIZE - 44x34
COMPUTER GENERATED - MANUAL CHANGES NOT PERMITTED

03/29/2005 01:56:12 PM

PLOTTED BY: ekeefe0b
C:\WorkFiles\25270\HLW\M6\HOP\P20009-1.dgn

24590-HLW-M6-HOP-P20010

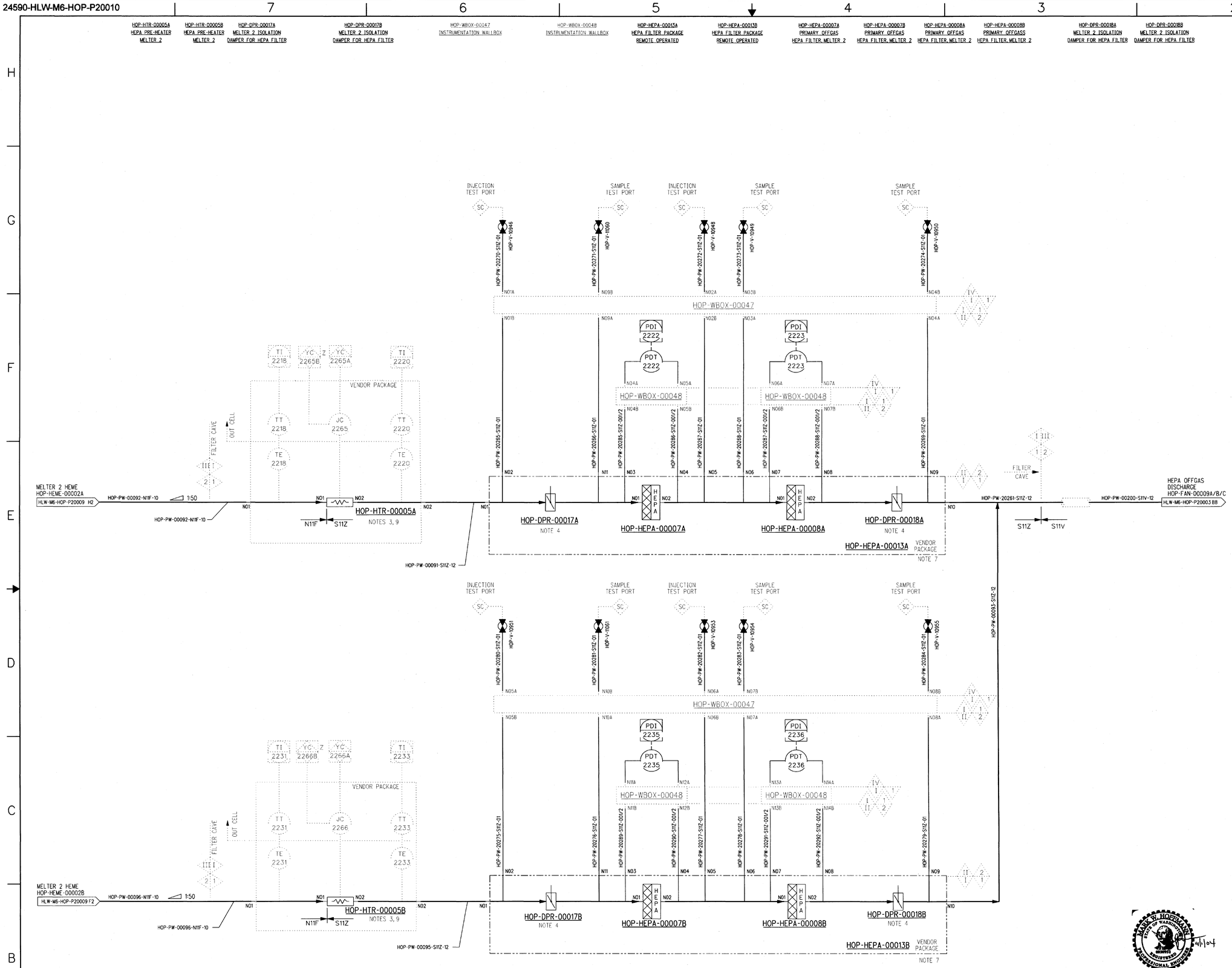

NOTES:

THE FOLLOWING NOTES ARE GENERAL NOTES FOR HOP SYSTEM

1. SEE DRAWINGS 24590-WTP-M6-50-P0001 THROUGH 24590-WTP-M6-50-P0006 FOR GENERAL NOTES, SYMBOLS AND LEGEND.
2. DELETED.

THE FOLLOWING NOTES ARE SPECIFIC TO THIS DRAWING

3. HEPA PRE-HEATERS (HOP-HTR-00005A/B) ARE MULTI-ELEMENT UNITS WITH STANDBY ELEMENTS. THE HEATER ASSEMBLY IS INSET IN THE FILTER CAVE WALL AND THE TEMPERATURE ELEMENTS AND HEATER CONTROLLER PENETRATE THROUGH A STEEL SHIELDING PLATE. HEATER UNIT SHALL BE EQUIPPED WITH OVER-TEMPERATURE PROTECTION (SUPPLIED BY VENDOR).
4. DAMPERS ARE REMOTE MANUAL MANIPULATOR ACTUATED.
5. NOT USED.
6. CONTENTS OF THIS DRAWING ARE DANGEROUS WASTE PERMIT AFFECTING.
7. VENDOR PACKAGE INCLUDES THE HEPA FILTER HOUSING, ISOLATION DAMPERS, TEST PORT CONNECTION POINT, AND INTERCONNECTING PIPING. THE PACKAGE IS IDENTIFIED BY THE HEPA HOUSING COMPONENT ID NUMBERS FOR PROCUREMENT AND MEETS ASME AG-1 REQUIREMENTS.
8. NOT USED.
9. ON LOSS OF FUNCTIONAL CONTROL, THE PRE-HEATER CONTROLLER WILL HOLD TO LAST SETPOINT VALVE. PRE-HEATER WILL BE FED FROM THE EMERGENCY DIESEL GENERATOR (EDG).
10. DELETED.
11. THE PORTIONS OF THIS DRAWING SHOWN IN PHANTOM ARE CONSIDERED NON-PERMIT AFFECTING AND ARE NOT SUBJECT TO THE REGULATORY REQUIREMENTS OF THE WAC CODE FOR THE DANGEROUS WASTE PERMIT TO THE EXTENT THAT THOSE PORTIONS DO NOT IMPACT DANGEROUS WASTE AREAS/OPERATIONS.

HOLD/OPEN ITEMS:

1. DELETED.

REFERENCES:

1. 24590-HLW-M5-V17T-P20003 "PROCESS FLOW DIAGRAM, HLW VIT MELTER 2 PRIMARY OFFGAS TREATMENT" (SYSTEM HOP).

MARK W. HOGELAND — STATE OF WASHINGTON — REGISTERED PROFESSIONAL ENGINEER — 4/1/04 — EXPIRES 12/16/04

PLEASE NOTE THAT SOURCE, SPECIAL NUCLEAR AND BYPRODUCT MATERIALS, AS DEFINED IN THE ATOMIC ENERGY ACT OF 1954 (AEA), ARE REGULATED AT THE U.S. DEPARTMENT OF ENERGY (DOE) FACILITIES EXCLUSIVELY BY DOE ACTING PURSUANT TO ITS AEA AUTHORITY. DOE ASSERTS, THAT PURSUANT TO THE AEA, IT HAS SOLE AND EXCLUSIVE RESPONSIBILITY AND AUTHORITY TO REGULATE SOURCE, SPECIAL NUCLEAR, AND BYPRODUCT MATERIAL AT DOE-OWNED NUCLEAR FACILITIES. INFORMATION CONTAINED HEREIN ON RADIONUCLIDES IS PROVIDED FOR PROCESS DESCRIPTION PURPOSES ONLY.

Q — QUALITY DESIGNATOR

REV	DESCRIPTION	ORG	CHKD	RVWD	APVD	DATE
0	ISSUED FOR PERMITTING USE	JM				3-31-04

REVISION HISTORY

ISSUED BY HOP-WTP/PDP — 03/26/04 — PROJECT ENGINEER

PROJECT No.	24590
SITE	HANFORD
AREA	200E
BUILDING No.	30

	BY	DATE
ORIGINATOR		3/30/04
CHECKER		3/30/04
APPROVER		3-31-04
REVIEWER		3-30-04

CONTENT APPLICABLE TO ALARA? [X] YES [ ] NO
ADR NO. N/A REV:

BECHTEL

RIVER PROTECTION PROJECT
WASTE TREATMENT PLANT
2435 STEVENS CENTER PLACE
RICHLAND, WA 99352

CONTRACT No: DE-AC27-01RV14136

P&ID - HLW
MELTER OFFGAS SYSTEM
MELTER 2
PRIMARY OFFGAS HEPA FILTERS

SCALE: NONE

24590-HLW-M6-HOP-P20010

REV 0

R10281665

'E' SIZE - 44x34
COMPUTER GENERATED - MANUAL CHANGES NOT PERMITTED

03/30/2004 07:41:09 AM

PLOTTED BY: kondersc
C:\Work\dms05070\HLW\HOP\P20010.dgn

FORM E_SDN.DGN 02/2003

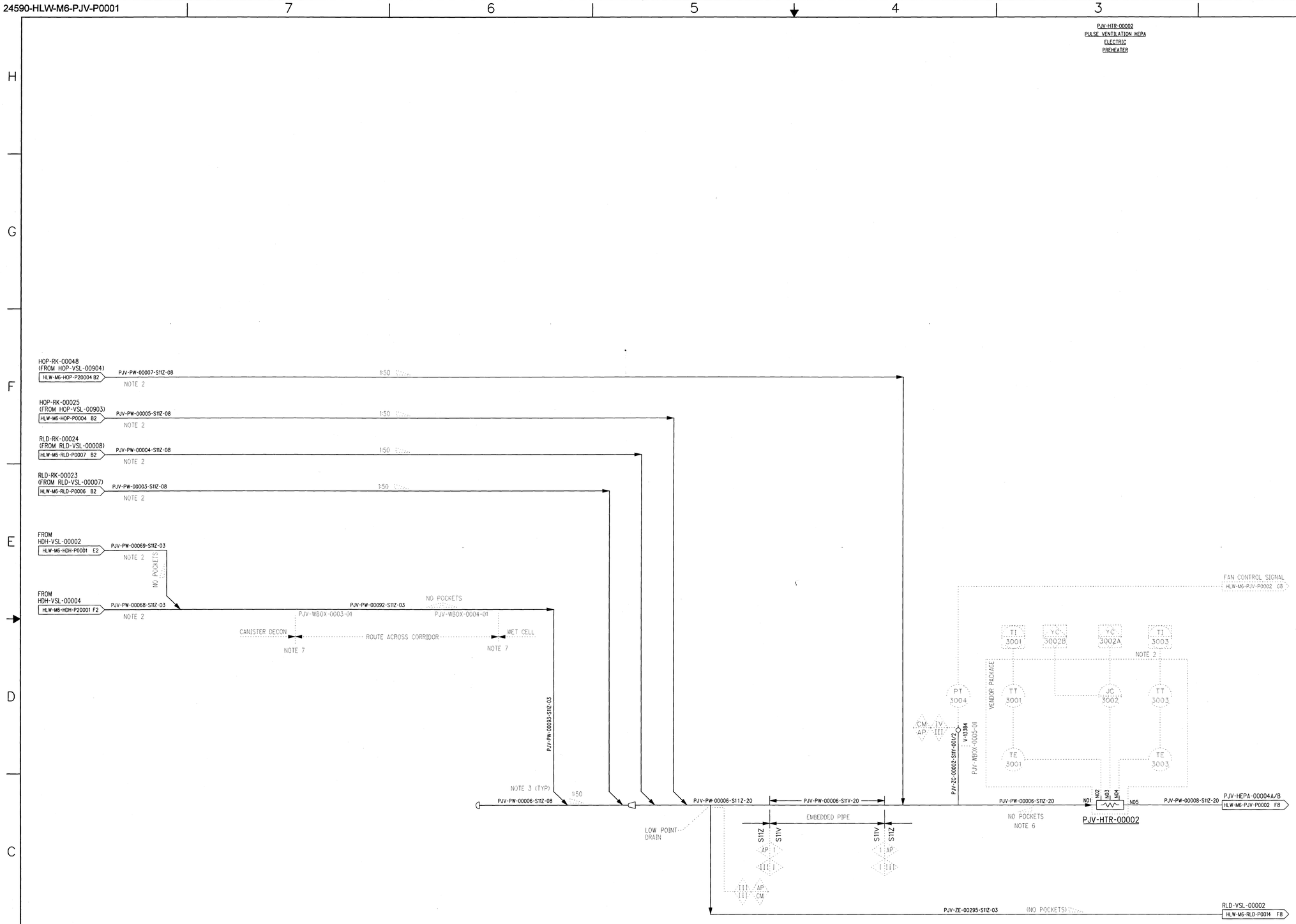

NOTES:

THE FOLLOWING ARE GENERAL NOTES FOR THE PJV SYSTEM

1. SEE DRAWINGS 24590-WTP-M6-50-P0001 THROUGH 24590-WTP-M6-50-P0006 FOR GENERAL NOTES, SYMBOLS AND LEGENDS.

THE FOLLOWING NOTES ARE SPECIFIC NOTES FOR THIS DRAWING

2. PIPELINES AND EQUIPMENT ARE QL-AP, SC-III FOR PRESSURE BOUNDARY, UNLESS NOTED OTHERWISE. THE QUALITY LEVELS AND SEISMIC CLASSES SHOWN ON THIS DRAWING REFLECT THE MINIMUM REQUIREMENTS FOR PRESSURE BOUNDARIES.
3. BRANCH TIE-INS WITH THE COLLECTION HEADER SHALL BE AT 45° AS SHOWN BELOW.

4. CONTENTS OF THIS DOCUMENT ARE DANGEROUS WASTE PERMIT AFFECTING.
5. DELETED.
6. THE MINIMUM SLOPE FOR PIPELINES LOCATED UPSTREAM OF PREHEATER PJV-HTR-00002 SHOULD BE AS SHOWN ON THE DRAWING, UNLESS PRECLUDED BY LAYOUT RESTRAINTS. HOWEVER, IN NO CASE SHOULD THE SLOPES BE LESS THAN 0.5% OR POCKETED. THERE ARE NO MINIMUM SLOPE REQUIREMENTS FOR PIPELINES DOWNSTREAM OF THE PREHEATER, BUT POCKETS ARE TO BE AVOIDED.
7. WALL/FLOOR JOGGLED PENETRATIONS SHALL BE DESIGNED TO QL-1/SC-I CRITERIA FOR ALL RS/CS CONFINEMENT BOUNDARY PENETRATIONS.
8. DELETED.
9. THE PORTIONS OF THIS DRAWING SHOWN IN PHANTOM ARE CONSIDERED NON-PERMIT AFFECTING AND ARE NOT SUBJECT TO THE REGULATORY REQUIREMENTS OF THE WAC CODE FOR THE DANGEROUS WASTE PERMIT TO THE EXTENT THAT THOSE PORTIONS DO NOT IMPACT DANGEROUS WASTE AREAS/OPERATIONS.

HOLD/OPEN ITEMS:

1. DELETED.
2. DELETED.
3. DELETED.
4. DELETED.
5. DELETED.
6. PJV HEATER CAPACITY IS PRELIMINARY PENDING CONFIRMATION FROM THE HEATER SUPPLIER.

REFERENCE:

1. 24590-HLW-3YD-PJV-00001, "SYSTEM DESCRIPTION FOR THE HLW PULSE JET VENTILATION SYSTEM" (SYSTEM PJV).

PLEASE NOTE THAT SOURCE, SPECIAL NUCLEAR AND BYPRODUCT MATERIALS, AS DEFINED IN THE ATOMIC ENERGY ACT OF 1954 (AEA), ARE REGULATED AT THE U.S. DEPARTMENT OF ENERGY (DOE) FACILITIES EXCLUSIVELY BY DOE ACTING PURSUANT TO ITS AEA AUTHORITY. DOE ASSERTS, THAT PURSUANT TO THE AEA, IT HAS SOLE AND EXCLUSIVE RESPONSIBILITY AND AUTHORITY TO REGULATE SOURCE, SPECIAL NUCLEAR, AND BYPRODUCT MATERIAL AT DOE-OWNED NUCLEAR FACILITIES. INFORMATION CONTAINED HEREIN ON RADIONUCLIDES IS PROVIDED FOR PROCESS DESCRIPTION PURPOSES ONLY.

Q
QUALITY DESIGNATOR

REV	DESCRIPTION	ORG	CHKD	RVWD	APVD	DATE
0	ISSUED FOR PERMITTING USE			SC	JV	10-6-04

REVISION HISTORY

ISSUED BY RPP-WTP PDC

PROJECT No.	24590
SITE	HANFORD
AREA	200E
BUILDING No.	30

ISSUE STAMP

	BY	DATE
ORIGINATOR		10/5/04
CHECKER		10/5/04
APPROVER		10-6-04
REVIEWER	Steve Crane	10/5/04

CONTENT APPLICABLE TO ALARA? [X] YES [ ] NO
ADR NO. N/A REV:

RIVER PROTECTION PROJECT
WASTE TREATMENT PLANT
2435 STEVENS CENTER PLACE
RICHLAND, WA 99352

CONTRACT No: DE-AC27-01RV14136

P&ID - HLW PULSE JET VENTILATION SYSTEM COLLECTION & CONDITIONING

SCALE: NONE

24590-HLW-M6-PJV-P0001

REV 0

'E' SIZE - 44x34
COMPUTER GENERATED - MANUAL CHANGES NOT PERMITTED

R10397760

09/30/2004 01:11:35 PM

PLOTTED BY: kandon ka
C:\Work\Temp\{2D2D1A4.tmp\24590-WTP-PJV-P0001-V0.dgn

FORM E_SDN.DGN 02/2003

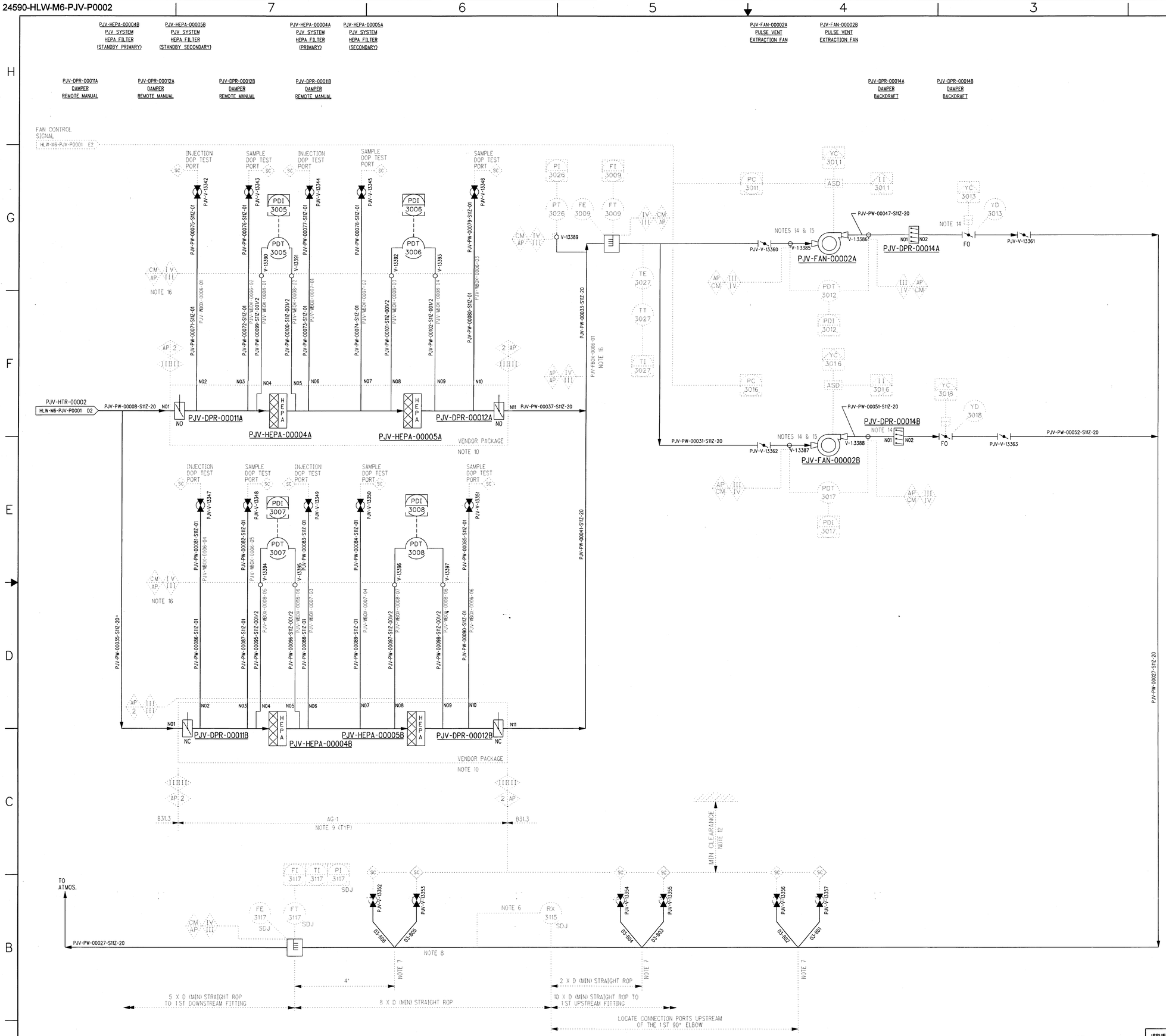

NOTES:

THE FOLLOWING NOTES ARE GENERAL NOTES FOR THE PJV SYSTEM

1. SEE DRAWINGS 24590-WTP-M6-50-P0001 THROUGH 24590-WTP-M6-50-P0006 FOR GENERAL NOTES, SYMBOLS AND LEGEND.
2. DELETED.
3. DELETED.
4. DELETED.

THE FOLLOWING NOTES ARE SPECIFIC TO THIS DRAWING

5. THE QUALITY LEVELS AND SEISMIC CLASSES SHOWN ON THIS DRAWING REFLECT THE MINIMUM REQUIREMENTS FOR PRESSURE BOUNDRIES.
6. SAMPLER FOR RETROSPECTIVE ANALYSIS SHALL BE PROVIDED.
7. TWO (2) CONNECTION PORTS PLACED AT 90° ORIENTATION.
8. INSTRUMENTATION AND TEST PORTS ARE SDJ SYSTEM: 20" DIAMETER HEADER REMAINS PJV SYSTEM.
9. ASME CODE BREAK FOR TESTING REQUIREMENTS.
10. VENDOR PACKAGE INCLUDES THE HEPA FILTER HOUSING, ISOLATION DAMPERS, TEST PORT CONNECTION POINTS AND INTERCONNECT PIPING. THE PACKAGE IS IDENTIFIED BY THE HEPA HOUSING COMPONENT ID NUMBER FOR PROCUREMENT.
11. CONTENTS OF THIS DOCUMENT ARE DANGEROUS WASTE PERMIT AFFECTING.
12.

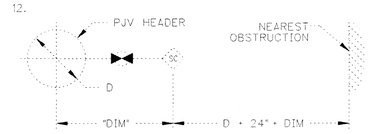

TYPICAL CLEARANCE REQUIREMENTS FOR SAMPLE/ACCESS PORTS ASSOCIATED WITH THE SDJ SYSTEM.

13. DELETED.
14. DELETED.
15. DELETED.
16. WALL/FLOOR JOGGLED/SLEEVED PENETRATIONS SHALL BE DESIGNED TO QL-1/SC-I CRITERIA FOR ALL R5/C5 CONFINEMENT BOUNDARY PENETRATIONS.
17. THE PORTIONS OF THIS DRAWING SHOWN IN PHANTOM ARE CONSIDERED NON-PERMIT AFFECTING AND ARE NOT SUBJECT TO THE REGULATORY REQUIREMENTS OF THE WAC CODE FOR THE DANGEROUS WASTE PERMIT TO THE EXTENT THAT THOSE PORTIONS DO NOT IMPACT DANGEROUS WASTE AREAS/OPERATIONS.

HOLD/OPEN ITEMS:

1. DELETED.
2. DELETED.

REFERENCES:

1. 24590-HLW-3YD-PJV-00001, "SYSTEM DESCRIPTION FOR THE HLW PULSE JET VENTILATION SYSTEM" (SYSTEM PJV).

PLEASE NOTE THAT SOURCE, SPECIAL NUCLEAR AND BYPRODUCT MATERIALS, AS DEFINED IN THE ATOMIC ENERGY ACT OF 1954 (AEA), ARE REGULATED AT THE U.S. DEPARTMENT OF ENERGY (DOE) FACILITIES EXCLUSIVELY BY DOE ACTING PURSUANT TO ITS AEA AUTHORITY. DOE ASSERTS, THAT PURSUANT TO THE AEA, IT HAS SOLE AND EXCLUSIVE RESPONSIBILITY AND AUTHORITY TO REGULATE SOURCE, SPECIAL NUCLEAR, AND BYPRODUCT MATERIAL AT DOE-OWNED NUCLEAR FACILITIES. INFORMATION CONTAINED HEREIN ON RADIONUCLIDES IS PROVIDED FOR PROCESS DESCRIPTION PURPOSES ONLY.

Q
QUALITY DESIGNATOR

REV	DESCRIPTION	DRG	CHKD	RVWD	APVD	DATE
0	ISSUED FOR PERMITTING USE			SC		10-6-04

REVISION HISTORY

ENG. B. ISENY — STATE OF WASHINGTON — 33449 — REGISTERED PROFESSIONAL ENGINEER — 10/6/04 — EXPIRES: 07/28/05

ISSUED BY RPP-WTP PDC		
PROJECT No.	24590	
SITE	HANFORD	
AREA	200E	
ISSUE STAMP	BUILDING No.	30
	BY	DATE
ORIGINATOR		10/5/04
CHECKER		10/5/04
APPROVER		10-6-04
REVIEWER		10/6/04

CONTENT APPLICABLE TO ALARA? [X] YES [ ] NO
ADR NO. N/A REV:

BECHTEL
RIVER PROTECTION PROJECT
WASTE TREATMENT PLANT
2435 STEVENS CENTER PLACE
RICHLAND, WA 99352

CONTRACT No: DE-AC27-01RV14136

P&ID - HLW PULSE JET VENTILATION SYSTEM FILTRATION & MONITORING

SCALE: NONE

24590-HLW-M6-PJV-P0002

REV 0

FORM E_SDN.DGN 02/2003

'E' SIZE - 44x34
COMPUTER GENERATED - MANUAL CHANGES NOT PERMITTED

R1039778I

09/30/2004 01:12:23 PM

PLOTTED BY: kondersp

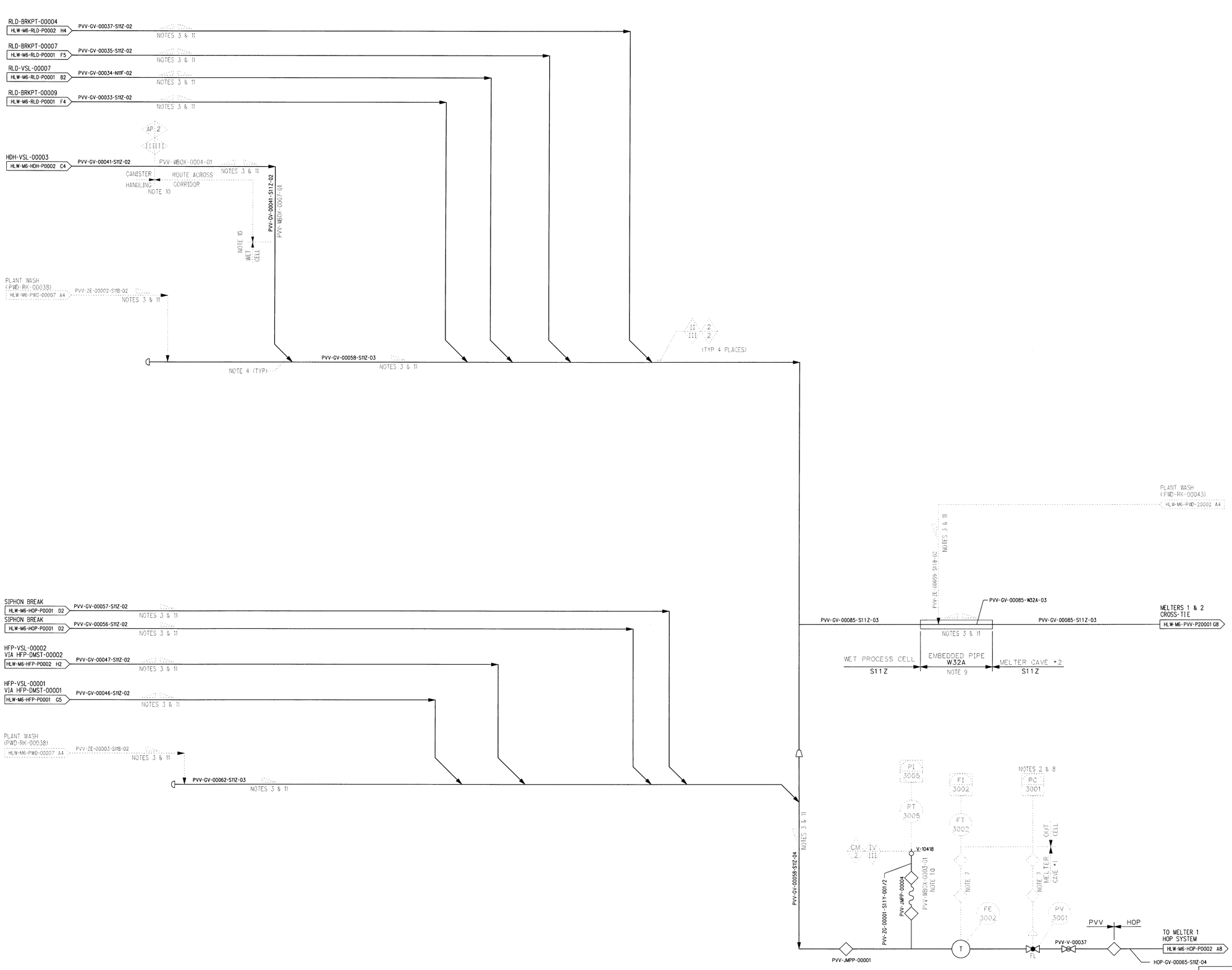

NOTES:

THE FOLLOWING NOTES ARE GENERAL NOTES FOR PVV SYSTEM.

1. SEE DRAWINGS 24590-WTP-M6-50-P0001 THROUGH 24590-WTP-M6-50-P0006 FOR GENERAL NOTES, SYMBOLS AND LEGEND.
2. DELETED.

THE FOLLOWING NOTES ARE SPECIFIC TO THIS DRAWING.

3. THE PIPELINES ON THIS DRAWING ARE DESIGNED TO QL- 2, SC- III CRITERIA, EXCEPT AS NOTED HERE OR ELSEWHERE ON THE DRAWING. LINES ROUTED OVER OR ADJACENT TO QL-1, SC-1 LINES SHALL MEET QL-2, SC-II CRITERIA. ADDITIONALLY, EMBEDDED PIPELINE SECTIONS SHALL BE DESIGNED TO QL-1, SC-I CRITERIA. THE QUALITY/SEISMIC CRITERIA AS STATED ARE CONSIDERED MINIMUM REQUIREMENTS FOR PRESSURE BOUNDARY DESIGN.
4. BRANCH TIE-INS WITH THE COLLECTION HEADER TO BE AT 45° AS SHOWN BELOW:

5. CONTENTS OF THIS DOCUMENT ARE DANGEROUS WASTE PERMIT AFFECTING.
6. DELETED.
7. DELETED.
8. THE PROCESS VARIABLE TO CONTROLLER PC-3001 REPRESENTS THE HIGHEST PRESSURE MEASURED IN ANY OF THE SEVEN VESSELS THAT VENT TO THE PVV. THE SIGNALS ARE TAKEN FROM: PT/PI-0052 W/ HFP-VSL-00001, PT/PI-0027 W/ HFP-VSL-00002, PT/PI-2052 W/ HFP-VSL-00005, PT/PI-2027 W/ HFP-VSL-00006, PT/PI-0130 W/ HDH-VSL-00003, PT/PI-3151 W/ RLD-VSL-00007, AND PT/PI-3216 W/ RLD-VSL-00008.
9. SHIELDING REQUIREMENTS FOR PIPELINE PVV-GV-00085-W32A-03 ARE SHOWN BELOW:

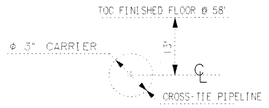

10. WALL/FLOOR JOGGLED PENETRATIONS SHALL BE DESIGNED TO QL-1/SC-I CRITERIA FOR ALL R5/C5 CONFINEMENT BOUNDARY PENETRATIONS.
11. AS A MINIMUM, ALL PIPELINES ON THIS DRAWING SHALL BE FREE DRAINING WITH NO POCKETS. IN ADDITION, PIPELINES WITHIN C5/R5 AREAS SHALL BE SLOPED AT 2% UNLESS CONSTRAINED BY LAYOUT LIMITATIONS. IF A PORTION/SECTION OF A PIPELINE'S SLOPE MUST BE LIMITED, THE SLOPE MAY BE REDUCED WITHIN THE AFFECTED SECTION AS NECESSARY, PROVIDED THAT THE MINIMUM SLOPE IS 0.5% OR GREATER.
12. THE PORTIONS OF THIS DRAWING SHOWN IN PHANTOM ARE CONSIDERED NON-PERMIT AFFECTING AND ARE NOT SUBJECT TO THE REGULATORY REQUIREMENTS OF THE WAC CODE FOR THE DANGEROUS WASTE PERMIT TO THE EXTENT THAT THOSE PORTIONS DO NOT IMPACT DANGEROUS WASTE AREA/OPERATIONS.

HOLD/OPEN ITEMS:

1. DELETED.
2. DELETED.
3. DELETED.
4. DELETED.

REFERENCES:

1. 24590-HLW-3YD-HOP-00001, SYSTEMS DESCRIPTION FOR HLW MELTER OFFGAS TREATMENT PROCESS AND PROCESS VESSEL VENT EXTRACTION (HOP AND PVV SYSTEMS).

PLEASE NOTE THAT SOURCE, SPECIAL NUCLEAR AND BYPRODUCT MATERIALS, AS DEFINED IN THE ATOMIC ENERGY ACT OF 1954 (AEA), ARE REGULATED AT THE U.S. DEPARTMENT OF ENERGY (DOE) FACILITIES EXCLUSIVELY BY DOE ACTING PURSUANT TO ITS AEA AUTHORITY. DOE ASSERTS, THAT PURSUANT TO THE AEA, IT HAS SOLE AND EXCLUSIVE RESPONSIBILITY AND AUTHORITY TO REGULATE SOURCE, SPECIAL NUCLEAR, AND BYPRODUCT MATERIAL AT DOE-OWNED NUCLEAR FACILITIES. INFORMATION CONTAINED HEREIN ON RADIONUCLIDES IS PROVIDED FOR PROCESS DESCRIPTION PURPOSES ONLY.

REV	DESCRIPTION	ORG	CHKD	RVWD	APVD	DATE
0	ISSUED FOR PERMITTING USE	JM		SC	SV	10-20-04

REVISION HISTORY

Q
QUALITY DESIGNATOR

ISSUED BY RPP-WTP PDC

PROJECT No.	24590
SITE	HANFORD
AREA	200E
BUILDING No.	30

ISSUE STAMP

	BY	DATE
ORIGINATOR		10/19/04
CHECKER		10/19/04
APPROVER		10-20-04
REVIEWER		10/19/04

CONTENT APPLICABLE TO ALARA? [X] YES [ ] NO
ADR NO. N/A REV:

STATE OF WASHINGTON — ERIC B. ISERN — 33448 — REGISTERED PROFESSIONAL ENGINEER — EXPIRES: 07/28/05

BECHTEL

RIVER PROTECTION PROJECT
WASTE TREATMENT PLANT
2435 STEVENS CENTER PLACE
RICHLAND, WA 99352

CONTRACT No: DE-AC27-01RV14136

P&ID - HLW PROCESS VESSEL VENT EXHAUST SYSTEM SHEET 1 OF 2

SCALE: NONE

24590-HLW-M6-PVV-P0001

REV 0

FORM E_SDN.DGN 02/2003

'E' SIZE - 44x34
COMPUTER GENERATED - MANUAL CHANGES NOT PERMITTED

10/19/2004 12:36:09 PM

PLOTTED BY: kanderso
C:\Work\dms05070\HLW\M6\PVV\P0001\P0001-0.dgn

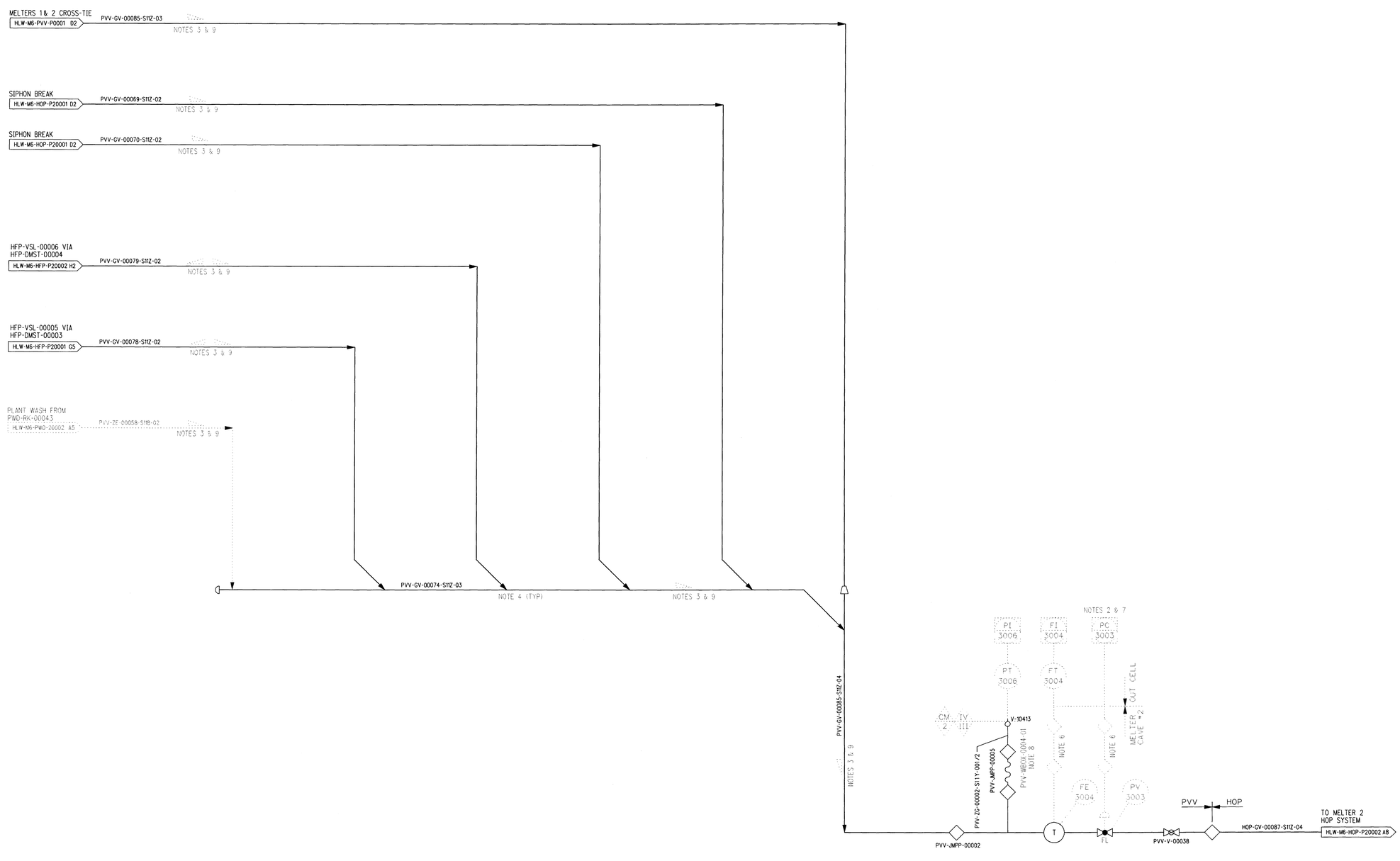

NOTES:

THE FOLLOWING NOTES ARE GENERAL NOTES FOR THE PVV SYSTEM.

1. SEE DRAWINGS 24590-WTP-M6-50-P0001 THROUGH 24590-WTP-M6-50-P0006 FOR GENERAL NOTES, SYMBOLS AND LEGEND.
2. DELETED.

THE FOLLOWING NOTES ARE SPECIFIC TO THIS DRAWING

3. THE PIPELINES ON THIS DRAWING ARE DESIGNED TO QL-2, SC-III CRITERIA, EXCEPT AS NOTED HERE OR ELSEWHERE ON THE DRAWING. LINES ROUTED OVER OR ADJACENT TO QL-1, SC-1 LINES SHALL MEET QL-2, SC-II CRITERIA. ADDITIONALLY, EMBEDDED PIPELINE SECTIONS SHALL BE DESIGNED TO QL-1, SC-1 CRITERIA. THE QUALITY/SEISMIC CRITERIA AS STATED ARE CONSIDERED MINIMUM REQUIREMENTS FOR PRESSURE BOUNDARY DESIGN.
4. BRANCH TIE-INS WITH THE COLLECTION HEADER SHALL BE AT 45° AS SHOWN BELOW:

5. CONTENTS OF THIS DOCUMENT ARE DANGEROUS WASTE PERMIT AFFECTING.
6. DELETED.
7. THE PROCESS VARIABLE TO CONTROLLER PC-3003 REPRESENTS THE HIGHEST PRESSURE MEASURED IN ANY OF THE SEVEN VESSELS THAT VENT TO THE PVV. THE SIGNALS ARE TAKEN FROM: PT/PI-0052 W/ HFP-VSL-00001, PT/PI-0027 W/ HFP-VSL-00002, PT/PI-2052 W/ HFP-VSL-00005, PT/PI-2027 W/ HFP-VSL-00006, PT/PI-0130 W/ HDH-VSL-00003, PT/PI-3161 W/ RLD-VSL-00007, AND PT/PI-3216 W/ RLD-VSL-00008.
8. WALL/FLOOR JOGGLED PENETRATIONS SHALL BE DESIGNED TO QL-1/SC-1 CRITERIA FOR ALL R5/C5 CONFINEMENT BOUNDARY PENETRATIONS.
9. AS A MINIMUM ALL PIPELINES ON THIS DRAWING SHALL BE FREE DRAINING WITH NO POCKETS. IN ADDITION, PIPELINES WITHIN C5/R5 AREAS SHALL BE SLOPED AT 2% UNLESS CONSTRAINED BY LAYOUT LIMITATIONS. IF A PORTION/SECTION OF A PIPELINE'S SLOPE MUST BE LIMITED, THE SLOPE MAY BE REDUCED WITHIN THE AFFECTED SECTION AS NECESSARY, PROVIDED THAT THE MINIMUM SLOPE IS 0.5% OR GREATER.
10. THE PORTIONS OF THIS DRAWING SHOWN IN PHANTOM ARE CONSIDERED NON-PERMIT AFFECTING AND ARE NOT SUBJECT TO THE REGULATORY REQUIREMENTS OF THE WAC CODE FOR THE DANGEROUS WASTE PERMIT TO THE EXTENT THAT THOSE PORTIONS DO NOT IMPACT DANGEROUS WASTE AREAS/OPERATIONS.

REFERENCES:

1. 24590-HLW-3YD-HOP-00001, SYSTEMS DESCRIPTION FOR HLW MELTER OFFGAS TREATMENT PROCESS AND PROCESS VESSEL VENT EXTRACTION (HOP AND PVV SYSTEMS).

PLEASE NOTE THAT SOURCE, SPECIAL NUCLEAR AND BYPRODUCT MATERIALS, AS DEFINED IN THE ATOMIC ENERGY ACT OF 1954 (AEA), ARE REGULATED AT THE U.S. DEPARTMENT OF ENERGY (DOE) FACILITIES EXCLUSIVELY BY DOE ACTING PURSUANT TO ITS AEA AUTHORITY. DOE ASSERTS, THAT PURSUANT TO THE AEA, IT HAS SOLE AND EXCLUSIVE RESPONSIBILITY AND AUTHORITY TO REGULATE SOURCE, SPECIAL NUCLEAR, AND BYPRODUCT MATERIAL AT DOE-OWNED NUCLEAR FACILITIES. INFORMATION CONTAINED HEREIN ON RADIONUCLIDES IS PROVIDED FOR PROCESS DESCRIPTION PURPOSES ONLY.

ERIC B. ISBEN — STATE OF WASHINGTON — 32449 — REGISTERED PROFESSIONAL ENGINEER — EXPIRES 07/28/05

Q — QUALITY DESIGNATOR

REV	DESCRIPTION	ORG	CHKD	RVWD	APVD	DATE
0	ISSUED FOR PERMITTING USE	JMT	RB	SHC	DV	10-19-04

REVISION HISTORY

ISSUED BY RPP-WTP PDC — ISSUE STAMP

PROJECT No.	24590
SITE	HANFORD
AREA	200E
BUILDING No.	30

	BY	DATE
ORIGINATOR	[signature]	10/18/04
CHECKER	[signature]	10/19/04
APPROVER	[signature]	10-19-04
REVIEWER	Steve Chass	10/18/04

CONTENT APPLICABLE TO ALARA? [X] YES [ ] NO
ADR NO. N/A REV:

BECHTEL
RIVER PROTECTION PROJECT
WASTE TREATMENT PLANT
2435 STEVENS CENTER PLACE
RICHLAND, WA 99352

CONTRACT No: DE-AC27-01RV14136

P&ID - HLW PROCESS VESSEL VENT EXHAUST SYSTEM SHEET 2 OF 2

SCALE: NONE

24590-HLW-M6-PVV-P20001

REV 0

FORM E_SDN.DGN 02/2003

'E' SIZE - 44x34
COMPUTER GENERATED - MANUAL CHANGES NOT PERMITTED

10/18/2004 03:42:48

PLOTTED BY: kanderso
C:\Work\dms05070\HLW\MEP\VVP20001v0.dgn

24590-HLW-M6-RLD-P0001

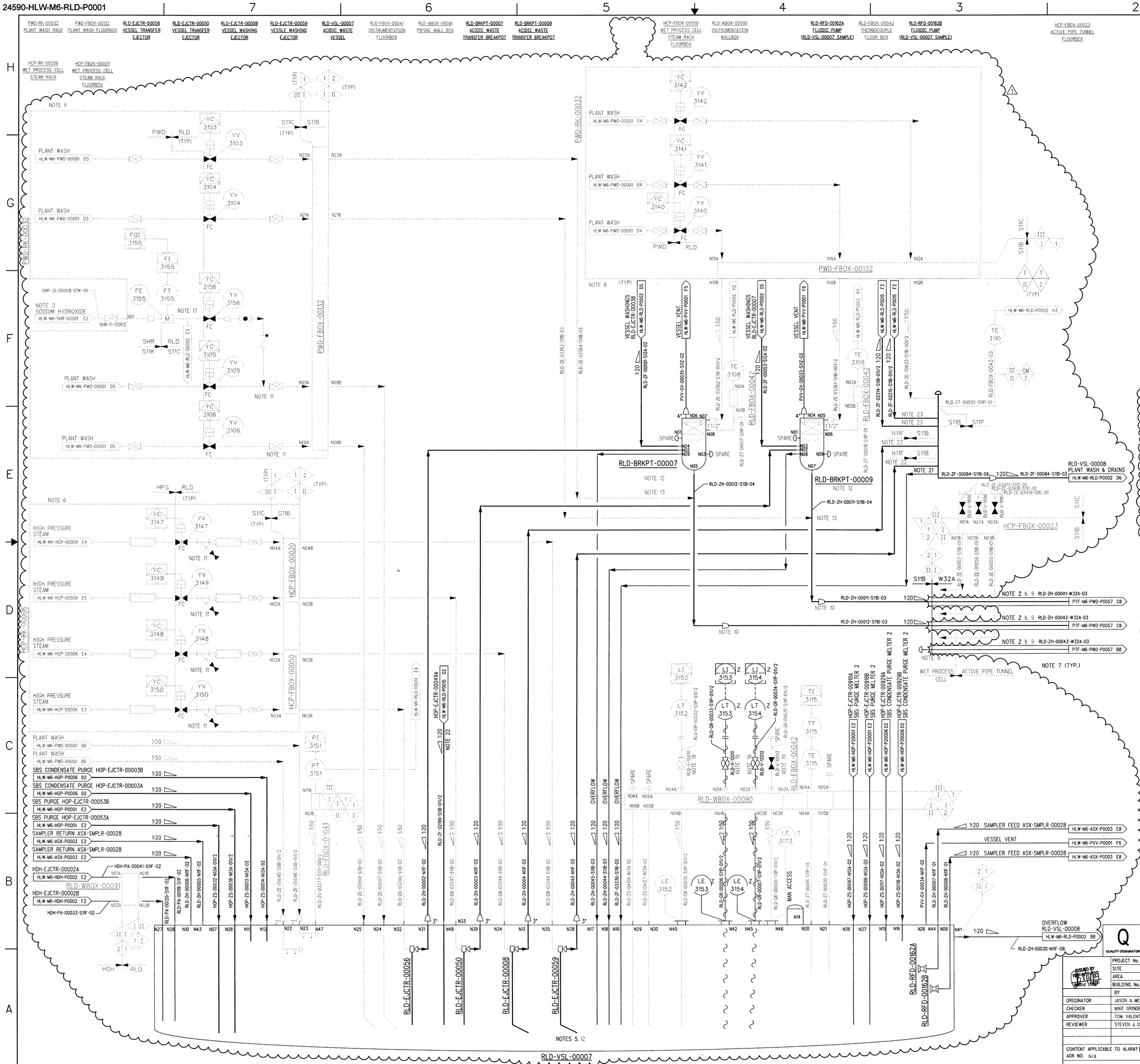

NOTES:

THE FOLLOWING NOTES ARE GENERAL NOTES FOR THE RLD SYSTEM

1. SEE DRAWINGS 24590-WTP-M6-50-P0001 THROUGH 24590-WTP-M6-50-P0006 FOR GENERAL NOTES, SYMBOLS AND LEGEND.

THE FOLLOWING NOTES ARE SPECIFIC TO THIS DRAWING

2. DOUBLE CONTAINMENT PIPE. INNER (CARRIER) PIPE - 3" DIAMETER. OUTER (CONTAINMENT) PIPE - 6" DIAMETER.
3. SODIUM HYDROXIDE ADDITION TO VESSELS IS VIA PLANT WASH CONNECTION.
4. ALL STRUCTURES, SYSTEMS, AND COMPONENTS SHOWN ON THIS DRAWING ARE QL-2 AND SC-II, EXCEPT AS NOTED.
5. SEE DRAWING 24590-HLW-M6-RLD-P0006 FOR DETAILS OF PULSE JET MIXERS AND CHARGE VESSELS ASSOCIATED WITH RLD-VSL-00007.
6. INTERNAL RACK CONFIGURATION IS SUBJECT TO OPTIMIZATION OF PIPE LAYOUT.
7. COAXIAL PIPE SLOPES TO PRETREATMENT AT 1:50. PRETREATMENT IS RESPONSIBLE FOR COAXIAL PIPE LEAK DETECTION.
8. SPARE LINE PROVIDED TO ACCOMMODATE POTENTIAL MODIFICATIONS DURING COMMISSIONING.
9. A 24" LONG FLANGED SPOOL PIECE (S11C SPECIFICATION) IS REQUIRED FOR THE INNER PIPE IN THE ACTIVE PIPE TUNNEL. SPOOL PIECE SHALL BE REMOVED AND PIPING IS TO BE RESTORED TO DOUBLE CONTAINED PIPING AFTER THE STARTUP PHASE IS COMPLETE.
10. REDUCER IN BREAKPOT DRAIN LINE SHALL BE LOCATED DOWNSTREAM OF THE FIRST HORIZONTAL BEND.
11. STEAM SUPPLY VALVES AND PLANT WASH VALVES MUST BE A MINIMUM OF 35 FEET ABOVE THE VESSEL OVERFLOW LEVEL.
12. QUALITY LEVEL AND SEISMIC CATEGORY OF VESSEL AND BREAKPOT INTERNALS ARE PROVIDED ON VESSEL AND BREAKPOT DRAWINGS AND ASSOCIATED DATA SHEETS.
13. FLUSH INLET TO BE 20 FEET MINIMUM BELOW BREAKPOT OUTLET.
14. NOT USED.
15. DELETED.
16. DELETED.
17. MINIMIZE DISTANCE BETWEEN FLOW ELEMENT FE-3155 AND CONTROL VALVE YV-3156.
18. DELETED.
19. RADAR GUIDE TUBE IS TO BE ROUTED TO TRANSMITTER. A FULL PORT BALL VALVE IS REQUIRED FOR ISOLATION PURPOSES AT TRANSMITTER END OF GUIDE TUBE.
20. CONTENTS OF THIS DOCUMENT ARE DANGEROUS WASTE PERMIT AFFECTING.
21. OVERFLOW LINE IS LOCATED LOWER THAN ALL INCOMING LINES TO THE MANIFOLD.
22. HIGH POINT OF EJECTOR DISCHARGE PIPING SHALL BE A MINIMUM OF 35 FT ABOVE RLD-VSL-00007 OVERFLOW NOZZLE.
23. HIGH POINT OF EJECTOR DISCHARGE PIPING SHALL BE A MINIMUM OF 35 FT ABOVE RLD-VSL-00008 OVERFLOW NOZZLE.
24. THE PORTIONS OF THIS DRAWING SHOWN IN PHANTOM ARE CONSIDERED NON-PERMIT AFFECTING AND ARE NOT SUBJECT TO THE REGULATORY REQUIREMENTS OF THE WAC CODE FOR THE DANGEROUS WASTE PERMIT TO THE EXTENT THAT THOSE PORTIONS DO NOT IMPACT DANGEROUS WASTE AREAS/OPERATIONS.

HOLD/OPEN ITEMS:

1. DELETED.
2. DELETED.
3. DELETED.
4. DELETED.
5. DELETED.

STATE OF WASHINGTON — PAUL B. LEBERMAN — 33449 — REGISTERED PROFESSIONAL ENGINEER — 8/5/04 — EXPIRES: 07/28/05

REFERENCES:

1. PROCESS FLOW DIAGRAM, "HLW VITRIFICATION LIQUID WASTE EFFLUENT" (SYSTEM RLD) (SHEET 1), 24590-HLW-M5-V17T-P0007001.
2. PROCESS FLOW DIAGRAM, "HLW VITRIFICATION LIQUID WASTE EFFLUENT" (SYSTEM RLD) (SHEET 2), 24590-HLW-M5-V17T-P0007002.
3. SYSTEM RLD: HLW RADIOACTIVE LIQUID WASTE DISPOSAL SYSTEM DESCRIPTION, 24590-HLW-3YD-RLD-00001.

PLEASE NOTE THAT SOURCE, SPECIAL NUCLEAR AND BYPRODUCT MATERIALS, AS DEFINED IN THE ATOMIC ENERGY ACT OF 1954 (AEA), ARE REGULATED AT THE U.S. DEPARTMENT OF ENERGY (DOE) FACILITIES EXCLUSIVELY BY DOE ACTING PURSUANT TO ITS AEA AUTHORITY. DOE ASSERTS, THAT PURSUANT TO THE AEA, IT HAS SOLE AND EXCLUSIVE RESPONSIBILITY AND AUTHORITY TO REGULATE SOURCE, SPECIAL NUCLEAR, AND BYPRODUCT MATERIAL AT DOE-OWNED NUCLEAR FACILITIES. INFORMATION CONTAINED HEREIN ON RADIONUCLIDES IS PROVIDED FOR PROCESS DESCRIPTION PURPOSES ONLY.

REV	DESCRIPTION	ORG	CHKD	RVWD	APVD	DATE
1	ISSUED FOR PERMITTING USE				TFV	8/5/04
0	ISSUED FOR PERMITTING USE	JM	MRG	SJC	TFV	12-23-03

REVISION HISTORY

Q — QUALITY DESIGNATOR

ISSUED BY RPP-WTP PROJECT — 21 DAYS OR LESS

PROJECT No.	24590	
SITE	HANFORD	
AREA	200E	
BUILDING No.	30	

	BY	DATE
ORIGINATOR	JASON A. MEDINA	12/22/03
CHECKER	MIKE GRINDEL	12/23/03
APPROVER	TOM VALENTINO	12/23/03
REVIEWER	STEVEN J. CROSS	12/23/03

CONTENT APPLICABLE TO ALARA? [X] YES [ ] NO
ADR NO. N/A REV:

BECHTEL

RIVER PROTECTION PROJECT
WASTE TREATMENT PLANT
2435 STEVENS CENTER PLACE
RICHLAND, WA 99352

CONTRACT No: DE-AC27-01RV14136

P&ID - HLW RADIOACTIVE LIQUID WASTE DISPOSAL SYSTEM ACTIVE EFFLUENT COLLECTION

SCALE: NONE

24590-HLW-M6-RLD-P0001

REV 1

"E" SIZE - 44x34
COMPUTER GENERATED - MANUAL CHANGES NOT PERMITTED

R10344389

08/05/2004 02:45:04

PLOTTED BY: kanderso
C:\Work\kms050707\HLW\MRGLPD0001.dgn

FORM E_SDN.DGN 02/2003

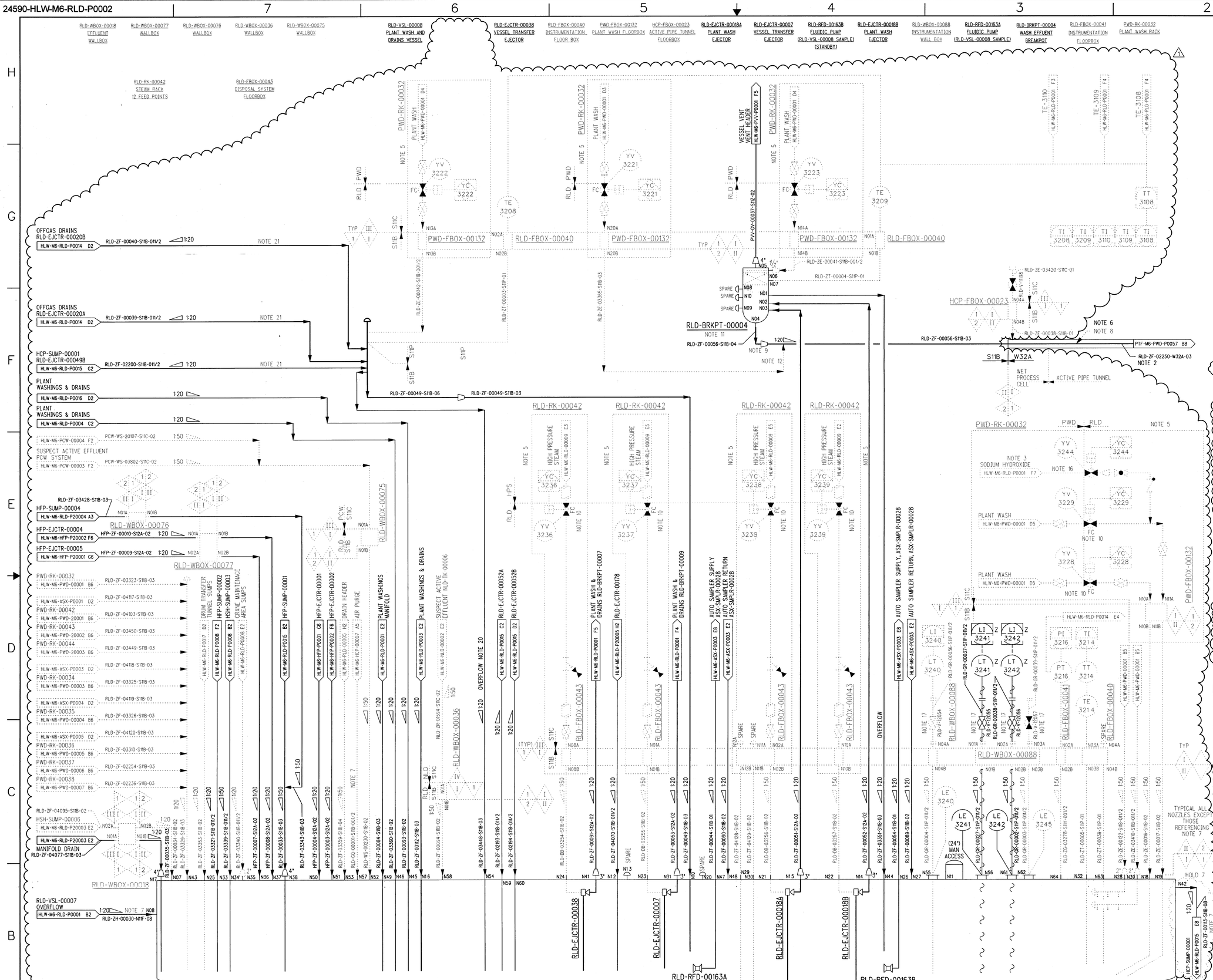

NOTES:

THE FOLLOWING NOTES ARE GENERAL NOTES FOR RLD SYSTEM

1. SEE DRAWINGS 24590-WTP-M6-50-P0001 THROUGH 24590-WTP-M6-50-P0006 FOR GENERAL NOTES, SYMBOLS AND LEGEND.

THE FOLLOWING NOTES ARE SPECIFIC TO THIS DRAWING

2. DOUBLE CONTAINMENT PIPE INNER (CARRIER) PIPE - 3". OUTER (CONTAINMENT) PIPE - 6".
3. SODIUM HYDROXIDE ADDITION TO VESSEL RLD-VSL-00008 IS VIA PLANT WASH CONNECTION.
4. SEE DRAWING 24590-HLW-M6-RLD-P0007 FOR DETAILS OF PULSE JET MIXERS AND CHARGE VESSELS ASSOCIATED WITH RLD-VSL-00008.
5. INTERNAL RACK CONFIGURATION IS SUBJECT TO OPTIMIZATION OF PIPE LAYOUT.
6. COAXIAL PIPE SLOPES TO PRE-TREATMENT AT 1:50, PRE-TREATMENT IS RESPONSIBLE FOR COAXIAL PIPE LEAK DETECTION.
7. PIPING REFERENCED TO THIS NOTE SHALL BE QUALITY LEVEL 1 AND SEISMIC CATEGORY I.
8. A 24"LONG FLANGED SPOOL PIECE (S11C SPECIFICATION) IS REQ'D FOR THE LINER PIPE IN THE ACTIVE PIPE TUNNEL. SPOOL PIECE SHALL BE REMOVED AND PIPING IS TO BE RESTORED TO DOUBLE CONTAINED PIPING AFTER THE STARTUP PHASE IS COMPLETE.
9. REDUCER IN BREAKPOT DRAIN LINE SHALL BE LOCATED DOWNSTREAM OF THE FIRST HORIZONTAL BEND.
10. STEAM SUPPLY VALVES AND PLANT WASH VALVES MUST BE A MINIMUM OF 35 FEET ABOVE THE VESSEL OVERFLOW LEVEL.
11. QUALITY LEVEL AND SEISMIC CATEGORY OF VESSEL AND BREAKPOT INTERNALS ARE PROVIDED ON VESSEL AND BREAKPOT DRAWINGS AND ASSOCIATED DATA SHEETS.
12. FLUSH INLET TO BE 20 FEET MINIMUM BELOW BREAKPOT OUTLET.
13. DELETED.
14. DELETED.
15. NOT USED.
16. DELETED.
17. RADAR GUIDE TUBE IS TO BE ROUTED TO TRANSMITTER. A FULL PORT BALL VALVE IS REQUIRED FOR ISOLATION PURPOSES AT TRANSMITTER END OF GUIDE TUBE.
18. DELETED.
19. CONTENTS OF THIS DOCUMENT ARE DANGEROUS WASTE PERMIT AFFECTING.
20. OVERFLOW LINE IS LOCATED LOWER THAN ALL INCOMING LINES TO THE MANIFOLD.
21. HIGH POINT OF EJECTOR DISCHARGE PIPING SHALL BE A MINIMUM OF 35 FEET ABOVE RLD-VSL-00008 OVERFLOW NOZZLE.
22. THE PORTIONS OF THIS DRAWING SHOWN IN PHANTOM ARE CONSIDERED NON-PERMIT AFFECTING AND ARE NOT SUBJECT TO THE REGULATORY REQUIREMENTS OF THE WAC CODE FOR THE DANGEROUS WASTE PERMIT TO THE EXTENT THAT THOSE PORTIONS DO NOT IMPACT DANGEROUS WASTE AREAS/OPERATIONS.

HOLD/OPEN ITEMS:

1. DELETED
2. DELETED.
3. DELETED.
4. DELETED.
5. DELETED.
6. DELETED.
7. PENDING DOE APPROVAL.

REFERENCES:

1. PROCESS FLOW DIAGRAM, "HLW VITRIFICATION LIQUID WASTE EFFLUENT (SYSTEM RLD) (SHEET 1)", 24590-HLW-M5-V17T-P0007001.
2. PROCESS FLOW DIAGRAM, "HLW VITRIFICATION LIQUID WASTE EFFLUENT (SYSTEM RLD) (SHEET 2)", 24590-HLW-M5-V17T-P0007002.
3. SYSTEM RLD: HLW RADIOACTIVE LIQUID WASTE DISPOSAL SYSTEM DESCRIPTION, 24590-HLW-3YD-RLD-00001.

PLEASE NOTE THAT SOURCE, SPECIAL NUCLEAR AND BYPRODUCT MATERIALS, AS DEFINED IN THE ATOMIC ENERGY ACT OF 1954 (AEA), ARE REGULATED AT THE U.S. DEPARTMENT OF ENERGY (DOE) FACILITIES EXCLUSIVELY BY DOE ACTING PURSUANT TO ITS AEA AUTHORITY. DOE ASSERTS, THAT PURSUANT TO THE AEA, IT HAS SOLE AND EXCLUSIVE RESPONSIBILITY AND AUTHORITY TO REGULATE SOURCE, SPECIAL NUCLEAR, AND BYPRODUCT MATERIAL AT DOE-OWNED NUCLEAR FACILITIES. INFORMATION CONTAINED HEREIN ON RADIONUCLIDES IS PROVIDED FOR PROCESS DESCRIPTION PURPOSES ONLY.

REV	DESCRIPTION	ORG	CHKD	RVWD	APVD	DATE
1	ISSUED FOR PERMITTING USE				QV	01/5/04
0	ISSUED FOR PERMITTING USE	SM	MRG	SC	TV	12/23/03

REVISION HISTORY

Q QUALITY DESIGNATOR

ISSUED BY RPP-WTP PDC DATE ISSUE STAMP

PROJECT No.	24590	
SITE	HANFORD	
AREA	200E	
BUILDING No.	30	
	BY	DATE
ORIGINATOR	JASON A. MEDINA	12/23/03
CHECKER	M.R. GRINDEL	12/23/03
APPROVER	TOM VALENTINO	12/23/03
REVIEWER	STEVEN J. CROSS	12/23/03

CONTENT APPLICABLE TO ALARA? [X] YES [ ] NO
ADR NO. N/A REV:

ISAC B. ISEN, STATE OF WASHINGTON, 33449, REGISTERED PROFESSIONAL ENGINEER, 1/5/04, EXPIRES: 07/28/2004

BECHTEL

RIVER PROTECTION PROJECT
WASTE TREATMENT PLANT
2435 STEVENS CENTER PLACE
RICHLAND, WA 99352

CONTRACT No: DE-AC27-01RV14136

P&ID - HLW RADIOACTIVE LIQUID WASTE DISPOSAL SYSTEM PLANT WASH & DRAINS VESSEL

SCALE: NONE

24590-HLW-M6-RLD-P0002

REV 1

FORM E_SDN.DGN 02/2003

'E' SIZE - 44x34
COMPUTER GENERATED - MANUAL CHANGES NOT PERMITTED

R10344390

08/05/2004 12:50:40 PM

PLOTTED BY: eewebb
C:\Work\dms05070\HLW\RLD\P0002r1.dgn

24590-HLW-M6-RLD-P0003

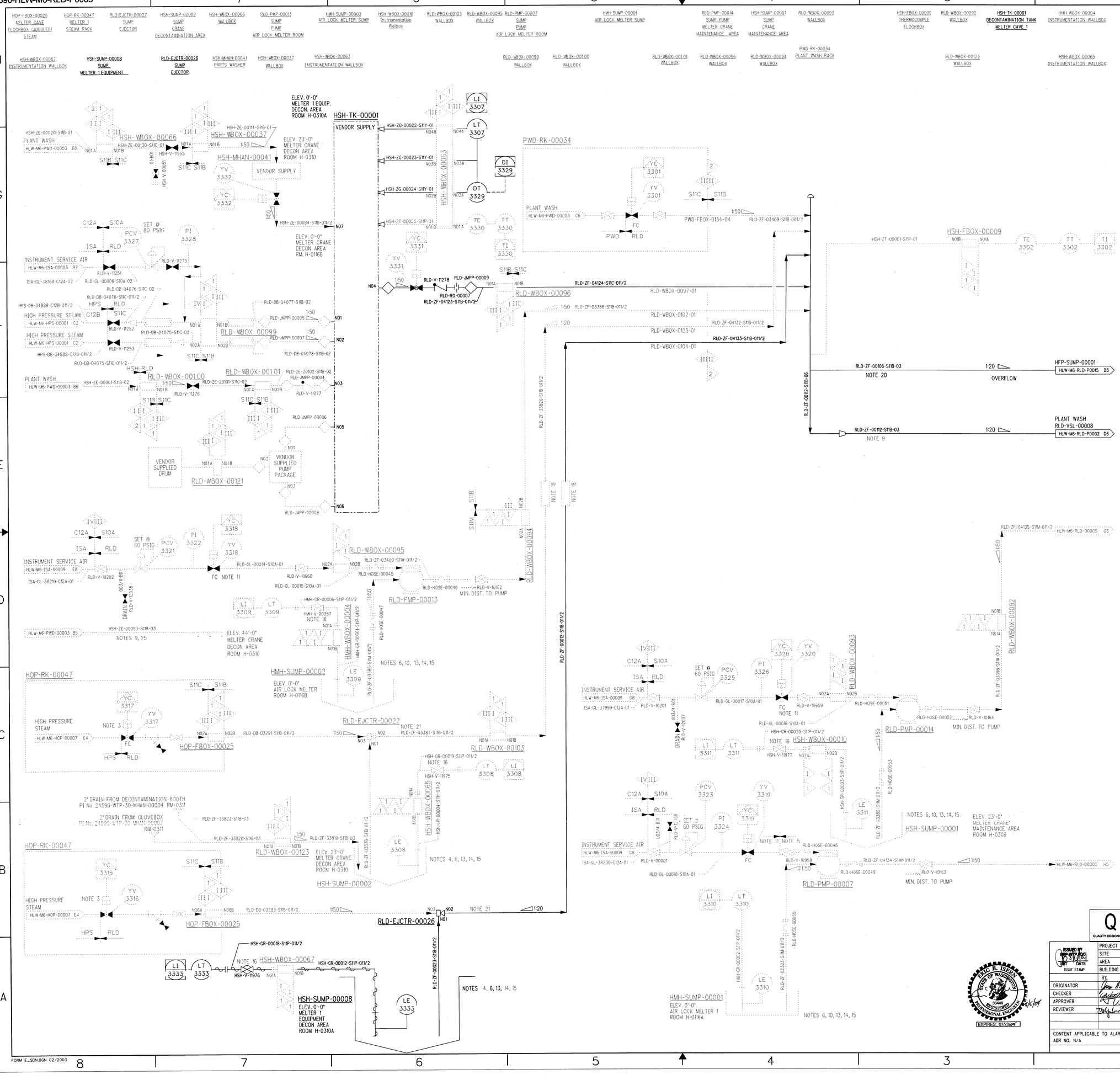

NOTES:

THE FOLLOWING NOTES ARE GENERAL NOTES FOR RLD SYSTEM

1. SEE DRAWINGS 24590-WTP-M6-50-P0001 THROUGH 24590-WTP-M6-50-P0006 FOR GENERAL NOTES, SYMBOLS AND LEGENDS.
2. NOT USED.

THE FOLLOWING NOTES ARE SPECIFIC TO THIS DRAWING

3. STEAM SUPPLY VALVES MUST BE A MINIMUM OF 35'-0" ABOVE THE EJECTOR.
4. PROVIDE 3/8" ±1/8" CLEARANCE BETWEEN BOTTOM OF EJECTOR SUCTION PIPE AND SUMP BASE.
5. VENTILATION SEAL WASHER REQUIRED ON ALL PIPE PENETRATIONS THAT SEGREGATE CONTAMINATION CONTROL ZONES i.e., C3 TO C5.
6. SUMP PROVIDED WITH REMOVABLE STAINLESS STEEL SCREEN PLATE TO PROTECT PIPING SYSTEM FROM DEBRIS. MAX. SCREEN SIZE IS 1/4" DIAMETER HOLE. SUMP COVERS TO BE PROVIDED BY CSA.
7. ALL PIPING AND COMPONENTS ASSOCIATED WITH SUMPS ARE SEISMIC CATEGORY III AND COMMERCIAL QUALITY UNLESS NOTED OTHERWISE.
8. DELETED.
9. THIS LINE IS SEISMIC CATEGORY II AND QUALITY LEVEL 2.
10. PROVIDE 1/2" ±1/8" CLEARANCE BETWEEN BOTTOM OF PUMP SUCTION PIPE AND SUMP BASE.
11. AIR SUPPLY VALVE, PRESSURE REGULATOR, PRESSURE INDICATOR AND ISOLATION VALVE FOR DIAPHRAGM PUMP SHALL BE LOCATED IN C2/R2 AREA.
12. ALL SYSTEMS AND COMPONENTS ON THIS DRAWING ARE NON-QUALITY RELATED UNLESS OTHERWISE NOTED AND EXCEPT AS IDENTIFIED IN NOTES 7, 9, AND 14.
13. SUMPS SHOWN WITH CONE BOTTOM ARE PROVIDED WITH STAINLESS STEEL LINERS. SUMPS SHOWN WITH FLAT BOTTOM HAVE NO LINERS.
14. ALL SUMPS ARE QUALITY LEVEL 1 AND SEISMIC CATEGORY I.
15. DELETED.
16. RADAR GUIDE IS TO BE ROUTED TO TRANSMITTER. A FULL PORT BALL VALVE IS REQUIRED FOR ISOLATION PURPOSES AT THE TRANSMITTER END OF GUIDE TUBE.
17. NOT USED.
18. DELETED.
19. NOT USED.
20. OVERFLOW LINE IS LOCATED UNDER ALL INCOMING LINES TO THE MANIFOLD.
21. EJECTOR DISCHARGE PIPING TO HAVE A MINIMUM LENGTH OF 24" OF STRAIGHT PIPE BEFORE 1st BEND.
22. NOT USED.
23. CONTENTS OF THIS DOCUMENT ARE DANGEROUS WASTE PERMIT AFFECTING.
24. DELETED.
25. DELETED.
26. THE PORTIONS OF THIS DRAWING SHOWN IN PHANTOM ARE CONSIDERED NON-PERMIT AFFECTING AND ARE NOT SUBJECT TO THE REGULATORY REQUIREMENTS OF THE WAC CODE FOR THE DANGEROUS WASTE PERMIT TO THE EXTENT THAT THOSE PORTIONS DO NOT IMPACT DANGEROUS WASTE AREAS/OPERATIONS.

HOLD/OPEN ITEMS:

1. DELETED.
2. DELETED.
3. DELETED.
4. DELETED.
5. DELETED.
6. DELETED.
7. DELETED.
8. DELETED.
9. DELETED.

REFERENCES:

1. 24590-HLW-3YD-RLD-00001, "SYSTEM DESCRIPTION FOR HLW RADIOACTIVE LIQUID WASTE DISPOSAL (SYSTEM RLD)."
2. 24590-HLW-M5-V17T-P0007001, "PROCESS FLOW DIAGRAM HLW VITRIFICATION LIQUID WASTE EFFLUENT (SYSTEM RLD) (SHEET 1)."
3. 24590-HLW-M5-V17T-P0007002, "PROCESS FLOW DIAGRAM HLW VITRIFICATION LIQUID WASTE EFFLUENT (SYSTEM RLD) (SHEET 2)."

PLEASE NOTE THAT SOURCE, SPECIAL NUCLEAR AND BYPRODUCT MATERIALS, AS DEFINED IN THE ATOMIC ENERGY ACT OF 1954 (AEA), ARE REGULATED AT THE U.S. DEPARTMENT OF ENERGY (DOE) FACILITIES EXCLUSIVELY BY DOE ACTING PURSUANT TO ITS AEA AUTHORITY. DOE ASSERTS, THAT PURSUANT TO THE AEA, IT HAS SOLE AND EXCLUSIVE RESPONSIBILITY AND AUTHORITY TO REGULATE SOURCE, SPECIAL NUCLEAR, AND BYPRODUCT MATERIAL AT DOE-OWNED NUCLEAR FACILITIES. INFORMATION CONTAINED HEREIN ON RADIONUCLIDES IS PROVIDED FOR PROCESS DESCRIPTION PURPOSES ONLY.

Q
QUALITY DESIGNATOR

REV	DESCRIPTION	ORG	CHKD	RVWD	APVD	DATE
0	ISSUED FOR PERMITTING USE	JM	[illegible]	[illegible]	TV	8/5/04

REVISION HISTORY

ISSUED BY RPP-WTP PRES
INIT DATE
ISSUE STAMP

PROJECT No.	24590	
SITE	HANFORD	
AREA	200E	
BUILDING No.	30	

	BY	DATE
ORIGINATOR	[illegible]	8-2-04
CHECKER	[illegible]	8/2/04
APPROVER	[illegible]	8/5/04
REVIEWER	[illegible]	8-5-04

CONTENT APPLICABLE TO ALARA? [X] YES [ ] NO
ADR NO. N/A REV:

ERIC B. ISSEN
STATE OF WASHINGTON
33446
REGISTERED PROFESSIONAL ENGINEER
8/5/04
EXPIRES: 07/28/05

BECHTEL

RIVER PROTECTION PROJECT
WASTE TREATMENT PLANT
2435 STEVENS CENTER PLACE
RICHLAND, WA 99352

CONTRACT No: DE-AC27-01RV14136

P&ID - HLW RADIOACTIVE LIQUID WASTE DISPOSAL SYSTEM DECONTAMINATION TANK & SUMPS

SCALE: NONE

24590-HLW-M6-RLD-P0003

REV 0

"E" SIZE - 44x34
COMPUTER GENERATED - MANUAL CHANGES NOT PERMITTED

R10344391

07/29/2004 04:40:42

PLOTTED BY: kanderso
C:\Work\dms05070\HLWM6RLDP0003-0.dgn

FORM E_SDN.DGN 02/2003

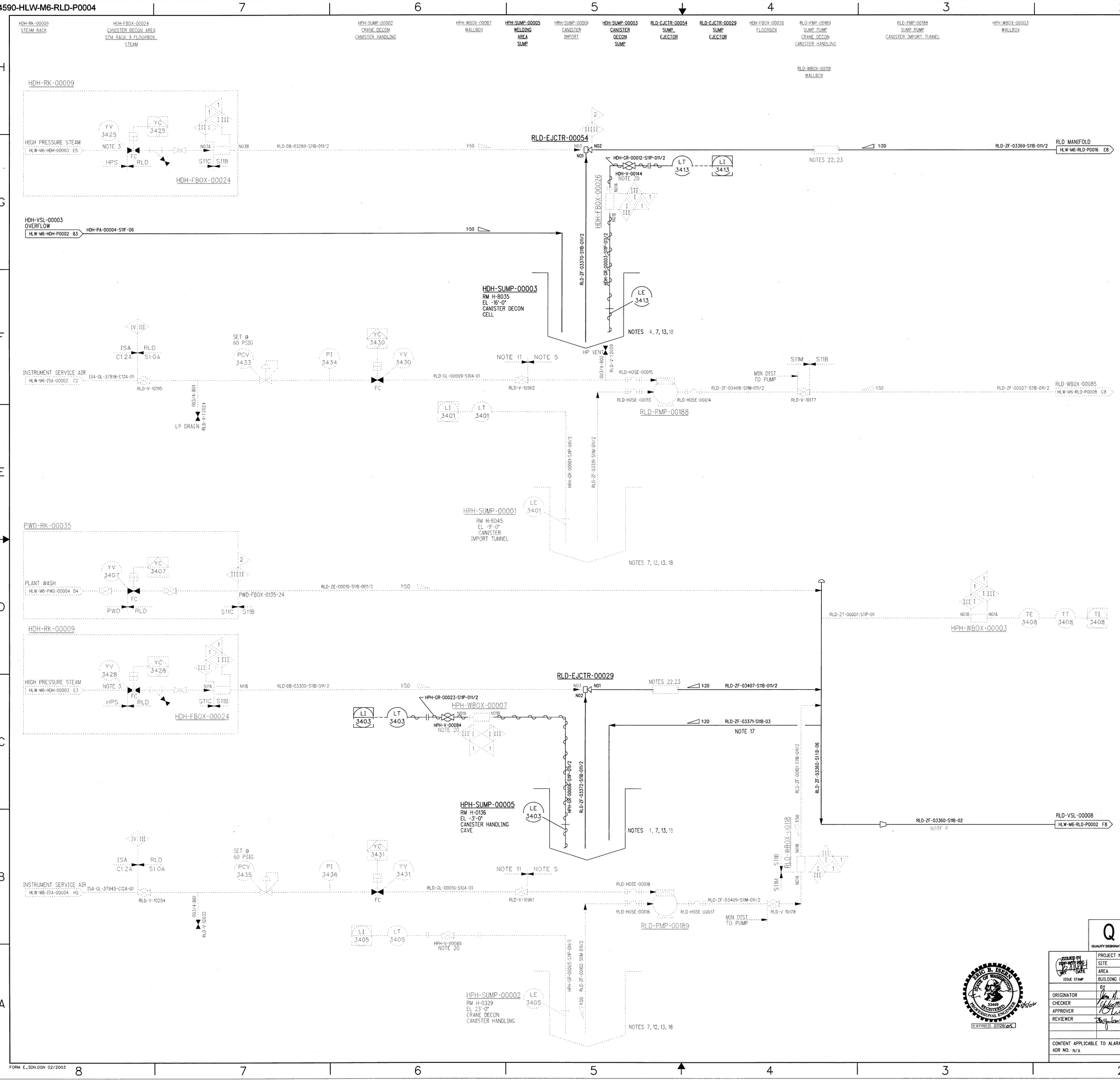

NOTES:

THE FOLLOWING NOTES ARE GENERAL NOTES FOR RLD SYSTEM.

1. SEE DRAWINGS 24590-WTP-M6-50-P0001 THROUGH 24590-WTP-M6-50-P0006 FOR GENERAL NOTES, SYMBOLS AND LEGEND.

THE FOLLOWING NOTES ARE SPECIFIC TO THIS DRAWING.

2. NOT USED.
3. STEAM SUPPLY VALVE MUST BE A MINIMUM OF 35'-0" ABOVE THE EJECTOR.
4. PROVIDE 3/8" ±1/8" CLEARANCE BETWEEN BOTTOM OF EJECTOR SUCTION PIPE AND SUMP LINER.
5. VENTILATION SEAL WASHER REQUIRED ON ALL SLEEVED PIPE PENETRATIONS THAT SEGREGATE CONTAMINATION CONTROL ZONES I.E., C3 TO C5.
6. THIS LINE IS SEISMIC CATEGORY II AND QUALITY LEVEL 2.
7. SUMP WILL BE COVERED WITH STAINLESS STEEL REMOVABLE SCREEN PLATE TO PROTECT PIPING SYSTEM FROM DEBRIS. MAX SCREEN SIZE 1/4" DIAMETER HOLE. SUMP COVERS TO BE PROVIDED BY CSA.
8. NOT USED.
9. ALL PIPING AND COMPONENTS ASSOCIATED WITH SUMPS ARE SEISMIC CATEGORY III AND COMMERCIAL QUALITY UNLESS OTHERWISE NOTED.
10. NOT USED.
11. AIR SUPPLY VALVE, PRESSURE REGULATOR, PRESSURE INDICATOR AND ISOLATION VALVE FOR DIAPHRAGM PUMP SHALL BE LOCATED IN C2/R2 AREA.
12. PROVIDE 1/2" ±1/8" CLEARANCE BETWEEN BOTTOM OF PUMP SUCTION PIPE AND SUMP BASE.
13. SUMPS SHOWN WITH CONE BOTTOM ARE PROVIDED WITH STAINLESS STEEL LINERS. SUMPS SHOWN WITH FLAT BOTTOM HAVE NO LINERS.
14. ALL SUMPS ARE QUALITY LEVEL 1.
15. ALL SUMPS ARE SEISMIC CATEGORY I.
16. NOT USED.
17. OVERFLOW LINE IS LOCATED UNDER ALL INCOMING LINES TO THE MANIFOLD.
18. DELETED.
19. CONTENTS OF THIS DOCUMENT ARE DANGEROUS WASTE PERMIT AFFECTING.
20. RADAR GUIDE IS TO BE ROUTED TO TRANSMITTER. A FULL PORT BALL VALVE IS REQUIRED FOR ISOLATION PURPOSES AT THE TRANSMITTER END OF GUIDE TUBE.
21. DELETED.
22. DELETED.
23. EJECTOR DISCHARGE PIPING TO HAVE A MINIMUM LENGTH OF 24 INCHES OF STRAIGHT PIPE BEFORE 1st BEND.
24. DELETED.
25. THE PORTIONS OF THIS DRAWING SHOWN IN PHANTOM ARE CONSIDERED NON-PERMIT AFFECTING AND ARE NOT SUBJECT TO THE REGULATORY REQUIREMENTS OF THE WAC CODE FOR THE DANGEROUS WASTE PERMIT TO THE EXTENT THAT THOSE PORTIONS DO NOT IMPACT DANGEROUS WASTE AREAS/OPERATIONS.

HOLD/OPEN ITEMS:

1. DELETED.
2. DELETED.
3. DELETED.
4. DELETED.
5. DELETED.
6. DELETED.
7. DELETED.

REFERENCES:

1. 24590-HLW-3YD-RLD-00001: "SYSTEM DESCRIPTION FOR HLW RADIOACTIVE LIQUID WASTE DISPOSAL (SYSTEM RLD)."
2. 24590-HLW-M5-V17T-P0007001: "PROCESS FLOW DIAGRAM HLW VITRIFICATION LIQUID WASTE EFFLUENT (SYSTEM RLD) SHEET 1)."
3. 24590-HLW-M5-V17T-P0007002: "PROCESS FLOW DIAGRAM HLW VITRIFICATION LIQUID WASTE EFFLUENT (SYSTEM RLD) (SHEET 2."

PLEASE NOTE THAT SOURCE, SPECIAL NUCLEAR AND BYPRODUCT MATERIALS, AS DEFINED IN THE ATOMIC ENERGY ACT OF 1954 (AEA), ARE REGULATED AT THE U.S. DEPARTMENT OF ENERGY (DOE) FACILITIES EXCLUSIVELY BY DOE ACTING PURSUANT TO ITS AEA AUTHORITY. DOE ASSERTS, THAT PURSUANT TO THE AEA, IT HAS SOLE AND EXCLUSIVE RESPONSIBILITY AND AUTHORITY TO REGULATE SOURCE, SPECIAL NUCLEAR, AND BYPRODUCT MATERIAL AT DOE-OWNED NUCLEAR FACILITIES. INFORMATION CONTAINED HEREIN ON RADIONUCLIDES IS PROVIDED FOR PROCESS DESCRIPTION PURPOSES ONLY.

REV	DESCRIPTION	ORG	CHKD	RVWD	APVD	DATE
0	ISSUED FOR PERMITTING USE	JM			TV	8/5/04

Q — QUALITY DESIGNATOR

REVISION HISTORY

ISSUED BY RPP-WTP PDC — ISSUE STAMP

PROJECT No.	24590	
SITE	HANFORD	
AREA	200E	
BUILDING No.	30	
	BY	DATE
ORIGINATOR		8-2-04
CHECKER		8/2/04
APPROVER		8/5/04
REVIEWER		8-5-04

CONTENT APPLICABLE TO ALARA? [X] YES [ ] NO

ADR NO. N/A REV:

STATE OF WASHINGTON — ERIC B. ISEN — 33449 — REGISTERED PROFESSIONAL ENGINEER — 8/5/04 — EXPIRES: 07/28/05

BECHTEL

RIVER PROTECTION PROJECT
WASTE TREATMENT PLANT
2435 STEVENS CENTER PLACE
RICHLAND, WA 99352

CONTRACT No: DE-AC27-01RV14136

P&ID - HLW RADIOACTIVE LIQUID WASTE DISPOSAL SYSTEM MISCELLANEOUS SUMPS

SCALE: NONE

24590-HLW-M6-RLD-P0004

REV 0

'E' SIZE - 44x34
COMPUTER GENERATED - MANUAL CHANGES NOT PERMITTED

R10344362

07/29/2004 04:41:18 PM

PLOTTED BY: sanderso
C:\Work\dms05070\HLWM6RLDP0004r0.dgn

FORM E_SDN.DGN 02/2003

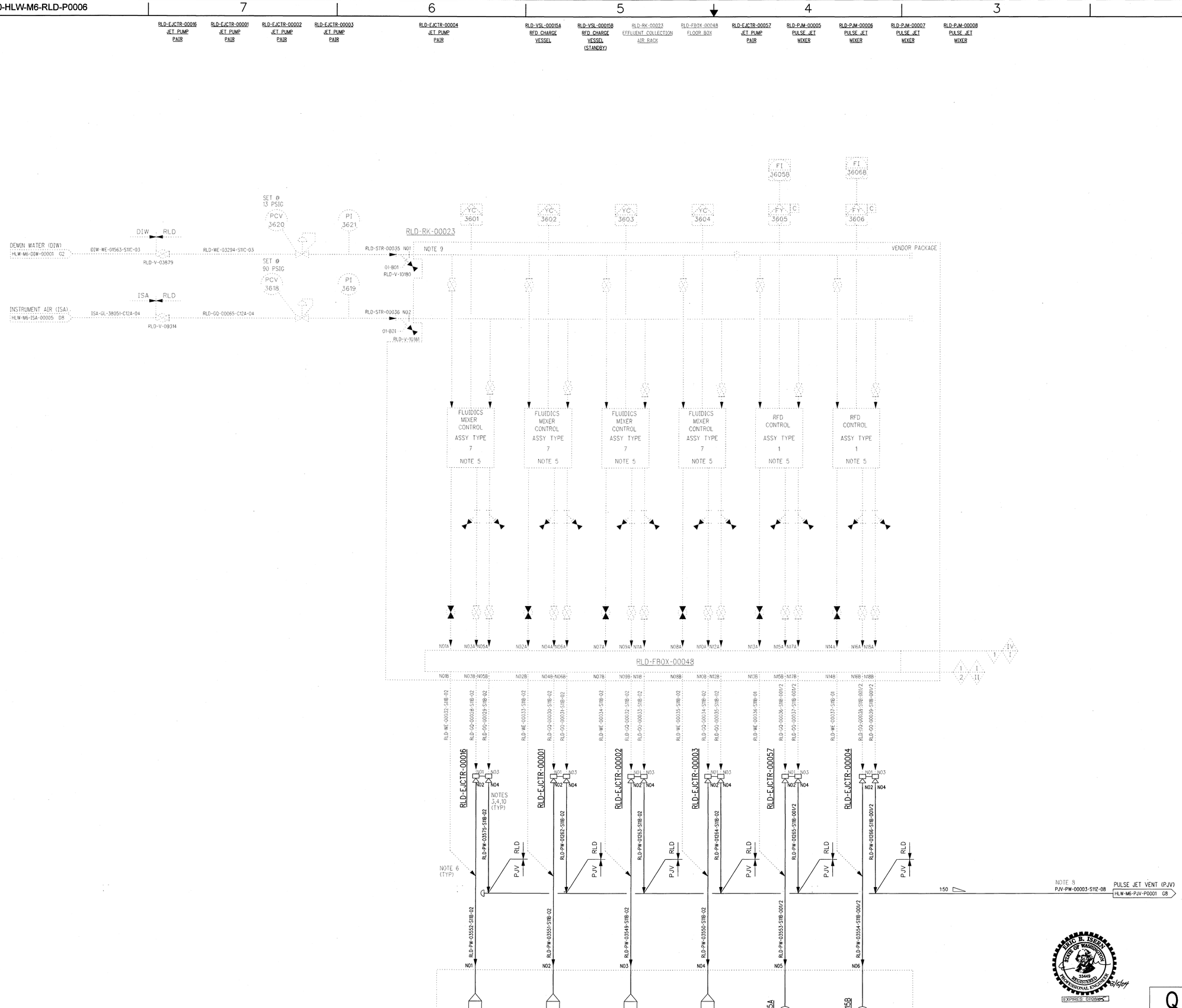

NOTES:

THE FOLLOWING NOTES ARE GENERAL NOTES FOR RLD SYSTEM.

1. SEE DRAWINGS 24590-WTP-M6-50-P0001 THROUGH 24590-WTP-M6-50-P0006 FOR GENERAL NOTES, SYMBOLS AND LEGEND.
2. DELETED.

THE FOLLOWING NOTES ARE SPECIFIC TO THIS DRAWING.

3. ALL JET PUMP PAIRS HAVE A MINIMUM VERTICAL DISTANCE OF 35 FEET ABOVE THE PROCESS VESSEL OVERFLOW.
4. ALL JET PUMP PAIRS ARE TO BE POSITIONED VERTICALLY.
5. FLUIDICS CONTROLLER DETAIL SHOWN ON "P&ID SYMBOLS AND LEGEND SHEET 4 OF 6 24590-WTP-M6-50-P0004."
6. A LATERAL FITTING IS TO BE USED AT THIS LOCATION TO ACCOMMODATE MANUAL CLEANING OF PIPE AND EQUIPMENT.
7. FOR OTHER VESSEL DETAILS SEE DRAWING 24590-HLW-M6-RLD-P0001.
8. THIS LINE IS QUALITY LEVEL 1 AND SEISMIC CATEGORY I.
9. INTERNAL RACK CONFIGURATION IS SUBJECT TO OPTIMIZATION OF PIPE LAYOUT.
10. ALL JET PUMP PAIRS ARE SEISMIC CATEGORY III AND COMMERCIAL QUALITY.
11. DELETED.
12. CONTENTS OF THIS DOCUMENT ARE DANGEROUS WASTE PERMIT AFFECTING.
13. DELETED.
14. THE PORTIONS OF THIS DRAWING SHOWN IN PHANTOM ARE CONSIDERED NON-PERMIT AFFECTING AND ARE NOT SUBJECT TO THE REGULATORY REQUIREMENTS OF THE WAC CODE FOR THE DANGEROUS WASTE PERMIT TO THE EXTENT THAT THOSE PORTIONS DO NOT IMPACT DANGEROUS WASTE AREAS/OPERATIONS.

HOLD/OPEN ITEMS:

1. DELETED.
2. DELETED.
3. DELETED.
4. DELETED.

REFERENCES:

1. PROCESS FLOW DIAGRAM, HLW VITRIFICATION LIQUID WASTE EFFLUENT (SYSTEM RLD) (SHEET 1), 24590-HLW-M5-V17T-P0007001.

PLEASE NOTE THAT SOURCE, SPECIAL NUCLEAR AND BYPRODUCT MATERIALS, AS DEFINED IN THE ATOMIC ENERGY ACT OF 1954 (AEA), ARE REGULATED AT THE U.S. DEPARTMENT OF ENERGY (DOE) FACILITIES EXCLUSIVELY BY DOE ACTING PURSUANT TO ITS AEA AUTHORITY. DOE ASSERTS, THAT PURSUANT TO THE AEA, IT HAS SOLE AND EXCLUSIVE RESPONSIBILITY AND AUTHORITY TO REGULATE SOURCE, SPECIAL NUCLEAR, AND BYPRODUCT MATERIAL AT DOE-OWNED NUCLEAR FACILITIES. INFORMATION CONTAINED HEREIN ON RADIONUCLIDES IS PROVIDED FOR PROCESS DESCRIPTION PURPOSES ONLY.

STEVE B. LOHEN — STATE OF WASHINGTON — 33449 — REGISTERED PROFESSIONAL ENGINEER — 8/5/04 — EXPIRES: 07/28/05

Q — QUALITY DESIGNATOR

REV	DESCRIPTION	ORG	CHKD	RVWD	APVD	DATE
0	ISSUED FOR PERMITTING USE	JW			DV	8/5/04

REVISION HISTORY

ISSUED BY OFFICE OF RIVER PROTECTION — DATE — ISSUE STAMP

PROJECT No.	24590	
SITE	HANFORD	
AREA	200E	
BUILDING No.	30	

	BY	DATE
ORIGINATOR		8-2-04
CHECKER		8/6/04
APPROVER		8-5-04
REVIEWER		8-5-04

CONTENT APPLICABLE TO ALARA? [X] YES [ ] NO
ADR NO. N/A REV:

BECHTEL
RIVER PROTECTION PROJECT
WASTE TREATMENT PLANT
2435 STEVENS CENTER PLACE
RICHLAND, WA 99352

CONTRACT No: DE-AC27-01RV14136

P&ID - HLW
RADIOACTIVE LIQUID WASTE DISPOSAL SYSTEM FLUIDICS AIR RACK
RLD-RK-00023

SCALE: NONE | 24590-HLW-M6-RLD-P0006 | REV 0

'E' SIZE - 44x34
COMPUTER GENERATED - MANUAL CHANGES NOT PERMITTED

R10344393

07/29/2004 04:41:59 PM

PLOTTED BY: kanderso
C:\Work\Bechtel\DOE\HLW\MBR\RLDP0006-0.dgn

FORM E_SDN.DGN 02/2003

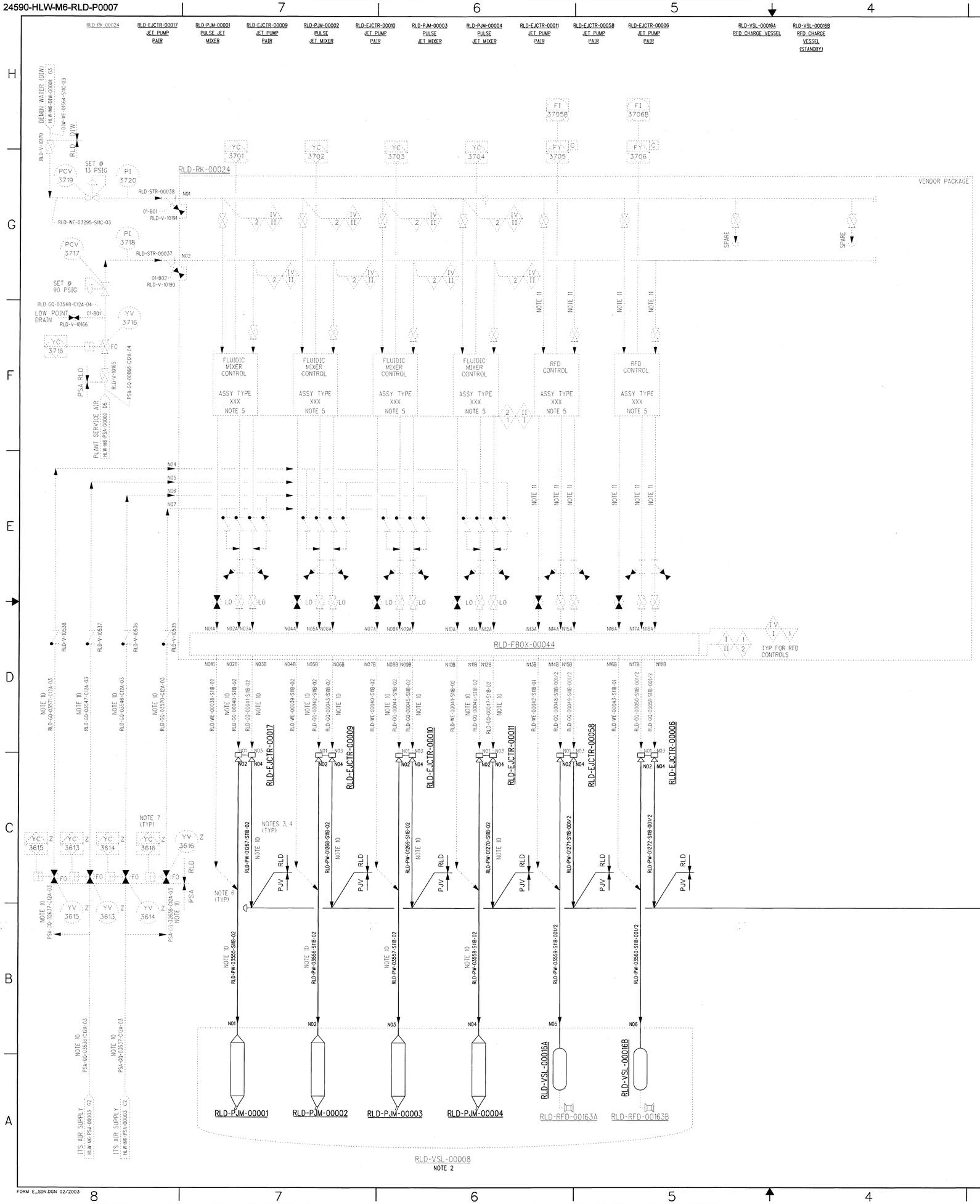

NOTES:

1. SEE DRAWINGS 24590-WTP-M6-50-P0001 THROUGH 24590-WTP-M6-50-P0006 FOR GENERAL NOTES, SYMBOLS AND LEGEND.
2. FOR OTHER VESSEL DETAILS SEE DRAWING 24590-HLW-M6-RLD-P0002.
3. THE JET PUMP PAIRS HAVE A MINIMUM VERTICAL DISTANCE OF 36 FEET ABOVE THE PROCESS VESSEL.
4. ALL JET PUMP PAIRS ARE TO BE POSITIONED VERTICALLY AS SHOWN.
5. FLUIDICS CONTROLLER DETAIL SHOWN ON "P&ID SYMBOLS AND LEGEND SHEET 5 OF 6" 24590-WTP-M6-50-P0005 (G7).
6. A 45 DEGREE WYE PIPE FITTING IS TO BE USED AT THIS LOCATION TO ACCOMMODATE MANUAL CLEANING OF PIPE AND EQUIPMENT.
7. AIR SUPPLY FOR VALVE CONTROL TO BE TAKEN FROM HYDROGEN PURGE SUPPLY LINE.
8. DELETED.
9. DELETED.
10. THIS LINE AND COMPONENTS ARE QUALITY LEVEL 1 AND SEISMIC CATEGORY I.
11. THIS LINE AND COMPONENTS ARE NON-QUALITY RELATED AND SEISMIC CATEGORY IV.
12. INTERNAL RACK CONFIGURATION IS SUBJECT TO OPTIMIZATION OF PIPE LAYOUT. THIS OPTIMIZATION SHALL INCLUDE INCORPORATION OF FIRE PREVENTION SEPARATION AS REQUIRED.
13. THE PORTIONS OF THIS DRAWING SHOWN IN PHANTOM ARE CONSIDERED NON-PERMIT AFFECTING AND ARE NOT SUBJECT TO THE REGULATORY REQUIREMENTS OF THE WAC CODE FOR THE DANGEROUS WASTE PERMIT TO THE EXTENT THAT THOSE PORTIONS DO NOT IMPACT DANGEROUS WASTE AREAS/OPERATIONS.

HOLD/OPEN ITEMS:

1. HYDROGEN MITIGATION STRATEGY IS UNDER REVIEW.
2. CONTROL VALVES ON HOLD PENDING PERFORMANCE OF SIZING CALCULATIONS.
3. ALL SIZES FOR DRIVE AND SUCTION NOZZLES ON FLUIDIC CONTROLLER AND JET PUMP PAIRS ARE BOUNDING SIZES PENDING VENDOR SPECIFICATION.
4. DELETED.
5. MONITORING OF FLOW AND/OR PRESSURE IN THIS LINE IS UNDER REVIEW.

REFERENCES:

1. PROCESS FLOW DIAGRAM, HLW VITRIFICATION LIQUID WASTE EFFLUENT (SYSTEM RLD)(SHEET 1), 24590-HLW-M5-V17T-P0007001.
2. PROCESS FLOW DIAGRAM, HLW VITRIFICATION LIQUID WASTE EFFLUENT (SYSTEM RLD)(SHEET 2), 24590-HLW-M5-V17T-P0007002.

PLEASE NOTE THAT SOURCE, SPECIAL NUCLEAR AND BYPRODUCT MATERIALS, AS DEFINED IN THE ATOMIC ENERGY ACT OF 1954 (AEA), ARE REGULATED AT THE U.S. DEPARTMENT OF ENERGY (DOE) FACILITIES EXCLUSIVELY BY DOE ACTING PURSUANT TO ITS AEA AUTHORITY. DOE ASSERTS, THAT PURSUANT TO THE AEA, IT HAS SOLE AND EXCLUSIVE RESPONSIBILITY AND AUTHORITY TO REGULATE SOURCE, SPECIAL NUCLEAR, AND BYPRODUCT MATERIAL AT DOE-OWNED NUCLEAR FACILITIES. INFORMATION CONTAINED HEREIN ON RADIONUCLIDES IS PROVIDED FOR PROCESS DESCRIPTION PURPOSES ONLY.

STATE OF WASHINGTON — CRAIG B. TOWERS — 33449 — REGISTERED PROFESSIONAL ENGINEER — EXPIRES: 07/28/05

REV	DESCRIPTION	ORG	CHKD	RVWD	APVD	DATE
0	ISSUED FOR PERMITTING USE	JM			DV	8-5-04

REVISION HISTORY

ISSUED BY RPP-WTP PDC — DATE

PROJECT No.	24590	
SITE	HANFORD	
AREA	200E	
BUILDING No.	30	
ISSUE STAMP		

	BY	DATE
ORIGINATOR		8-2-04
CHECKER		8/2/04
APPROVER		8-5-04
REVIEWER		8-5-04

CONTENT APPLICABLE TO ALARA? [X] YES [ ] NO
ADR NO. N/A REV:

BECHTEL

RIVER PROTECTION PROJECT
WASTE TREATMENT PLANT
2435 STEVENS CENTER PLACE
RICHLAND, WA 99352

CONTRACT No: DE-AC27-01RV14136

P&ID - HLW RADIOACTIVE LIQUID WASTE DISPOSAL SYSTEM FLUIDICS AIR RACK RLD-RK-00024 (Q)

SCALE: NONE

24590-HLW-M6-RLD-P0007

REV 0

R10344394

'E' SIZE - 44x34
COMPUTER GENERATED - MANUAL CHANGES NOT PERMITTED

FORM E_SDN.DGN 02/2003

PLOTTED BY: kondeso
C:\Data\Users\DOCS\DVLEWIS\RLDP0007-0.dgn
07/29/2004 04:42:39 PM

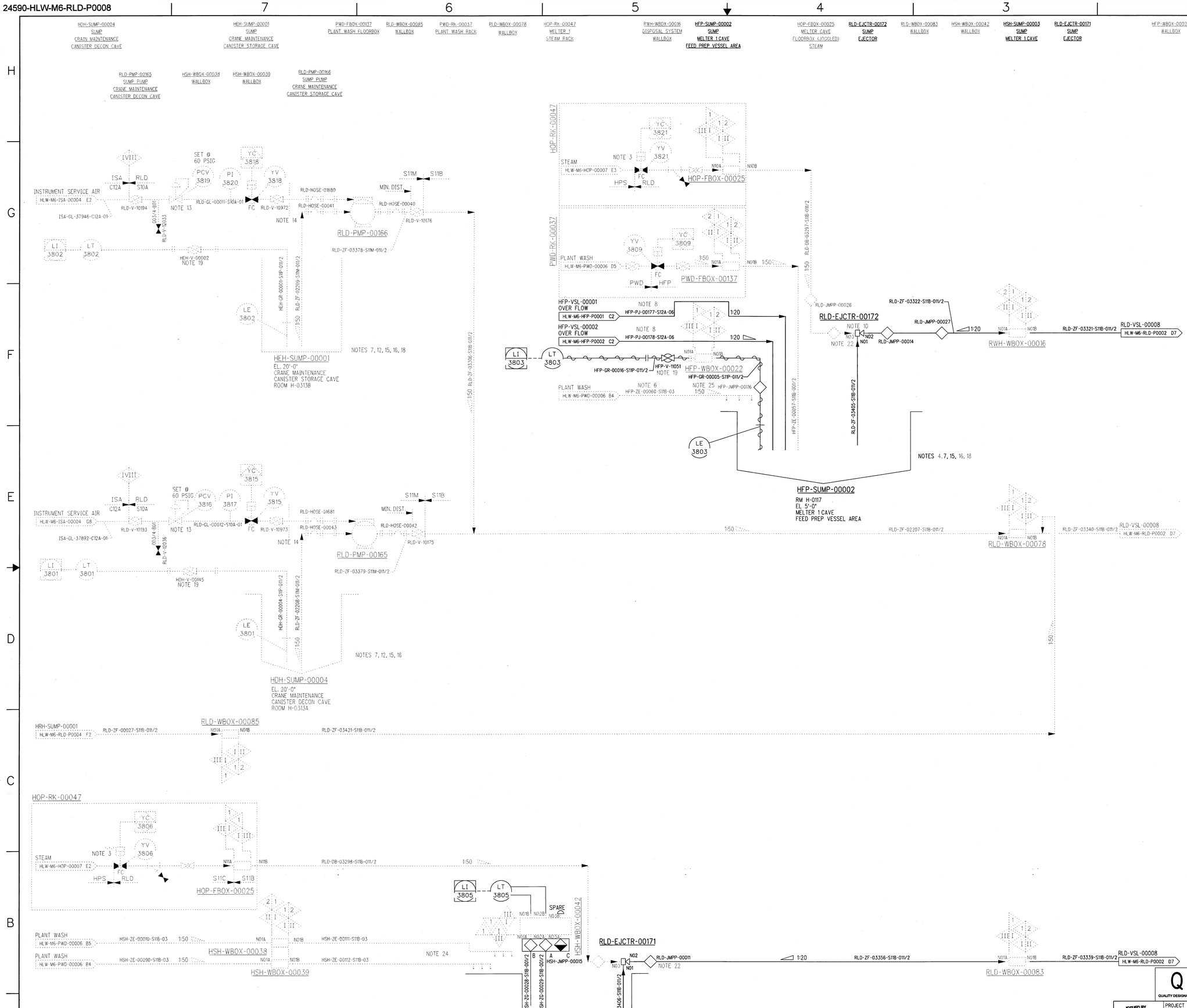

NOTES:

THE FOLLOWING NOTES ARE GENERAL NOTES FOR RLD SYSTEM.

1. SEE DRAWINGS 24590-WTP-M6-50-P0001 THROUGH 24590-WTP-M6-50-P0006 FOR GENERAL NOTES, SYMBOLS AND LEGEND.

THE FOLLOWING NOTES ARE SPECIFIC TO THIS DRAWING.

2. NOT USED.
3. STEAM SUPPLY VALVES MUST BE A MINIMUM OF 35'-0" ABOVE THE EJECTOR.
4. PROVIDE ⅜" ±1/8" CLEARANCE BETWEEN BOTTOM OF EJECTOR SUCTION PIPE AND SUMP LINER.
5. NOT USED.
6. PIPING IS QUALITY LEVEL 2 AND SEISMIC CATEGORY II.
7. SUMP WILL BE COVERED WITH STAINLESS STEEL REMOVABLE SCREEN PLATE TO PROTECT PIPING SYSTEM FROM DEBRIS. MAX SCREEN SIZE ¼" DIAMETER HOLE. SUMP AND SUMP COVERS TO BE PROVIDED BY CSA.
8. PIPING IS QUALITY LEVEL 1 AND SEISMIC CATEGORY I.
9. CONTENTS OF THIS DOCUMENT ARE DANGEROUS WASTE PERMIT AFFECTING.
10. EJECTOR IS COMMERICAL GRADE AND SEISMIC CATEGORY III.
11. NOT USED.
12. PROVIDE ½" ±1/8" CLEARANCE BETWEEN BOTTOM OF SUCTION PIPE AND SUMP BASE.
13. AIR SUPPLY VALVE PRESSURE REGULATOR, PRESSURE INDICATOR AND ISOLATION VALVES FOR DIAPHRAGM PUMP SHALL BE LOCATED IN C2/R2 AREA.
14. VENTILATION SEAL WASHER REQUIRED ON ALL PIPE PENETRATIONS THAT SEGREGATE CONTAMINATION CONTROL ZONES i.e. C3 TO C5.
15. SUMPS SHOWN WITH CONE BOTTOM ARE PROVIDED WITH STAINLESS STEEL LINERS. SUMPS SHOWN WITH FLAT BOTTOM HAVE NO LINERS.
16. ALL SUMPS ARE QUALITY LEVEL 1 AND SEISMIC CATEGORY I.
17. NOT USED.
18. DELETED.
19. RADAR GUIDE IS TO BE ROUTED TO TRANSMITTER. A FULL PORT BALL VALVE IS REQUIRED FOR ISOLATION PURPOSES AT TRANSMITTER END OF GUIDE TUBE.
20. NOT USED.
21. NOT USED.
22. EJECTOR DISCHARGE PIPING TO HAVE A MINIMUM LENGTH OF 24 INCHES OF STRAIGHT PIPE BEFORE 1ST BEND.
23. DELETED.
24. DELETED.
25. DELETED.
26. DELETED.
27. THE PORTIONS OF THIS DRAWING SHOWN IN PHANTOM ARE CONSIDERED NON-PERMIT AFFECTING AND ARE NOT SUBJECT TO THE REGULATORY REQUIREMENTS OF THE WAC CODE FOR THE DANGEROUS WASTE PERMIT TO THE EXTENT THAT THOSE PORTIONS DO NOT IMPACT DANGEROUS WASTE AREAS/OPERATIONS.

HOLD/OPEN ITEMS:

1. DELETED.
2. DELETED.
3. DELETED.
4. DELETED.
5. DELETED.

REFERENCES:

1. 24590-HLW-3YD-RLD-00001, "SYSTEM DESCRIPTION FOR HLW RADIOACTIVE LIQUID WASTE DISPOSAL (SYSTEM RLD)".
2. 24590-HLW-M5-V17T-P0007001, "PROCESS FLOW DIAGRAM HLW VITRIFICATION LIQUID WASTE EFFLUENT (SYSTEM RLD) (SHEET 1)".
3. 24590-HLW-M5-V17T-P0007002, "PROCESS FLOW DIAGRAM HLW VITRIFICATION LIQUID WASTE EFFLUENT (SYSTEM RLD) (SHEET 2)".

PLEASE NOTE THAT SOURCE, SPECIAL NUCLEAR AND BYPRODUCT MATERIALS, AS DEFINED IN THE ATOMIC ENERGY ACT OF 1954 (AEA), ARE REGULATED AT THE U.S. DEPARTMENT OF ENERGY (DOE) FACILITIES EXCLUSIVELY BY DOE ACTING PURSUANT TO ITS AEA AUTHORITY. DOE ASSERTS, THAT PURSUANT TO THE AEA, IT HAS SOLE AND EXCLUSIVE RESPONSIBILITY AND AUTHORITY TO REGULATE SOURCE, SPECIAL NUCLEAR, AND BYPRODUCT MATERIAL AT DOE-OWNED NUCLEAR FACILITIES. INFORMATION CONTAINED HEREIN ON RADIONUCLIDES IS PROVIDED FOR PROCESS DESCRIPTION PURPOSES ONLY.

Q
QUALITY DESIGNATOR

REVISION HISTORY

REV	DESCRIPTION	ORG	CHKD	RVWD	APVD	DATE
0	ISSUED FOR PERMITTING USE	JM	CM	JV	JV	8/5/04

ISSUED BY / ISSUE STAMP / UNIT / DATE

PROJECT No.	24590
SITE	HANFORD
AREA	200E
BUILDING No.	30

	BY	DATE
ORIGINATOR	Tom A. Mathes	8-2-04
CHECKER	Gilles Maya	8/5/04
APPROVER	K. Welsh	8/5/04
REVIEWER	Tony Gonzalez	8-5-04

CONTENT APPLICABLE TO ALARA? [X] YES [ ] NO
ADR NO. N/A REV:

BECHTEL

RIVER PROTECTION PROJECT
WASTE TREATMENT PLANT
2435 STEVENS CENTER PLACE
RICHLAND, WA 99352

CONTRACT No: DE-AC27-01RV14136

P&ID - HLW RADIOACTIVE LIQUID WASTE DISPOSAL SYSTEM MISCELLANEOUS SUMPS

SCALE: NONE

24590-HLW-M6-RLD-P0008

REV 0

ERIC B. ISBERNER — STATE OF WASHINGTON — 33443 — REGISTERED PROFESSIONAL ENGINEER — 8/5/04 — EXPIRES: 07/28/05

FORM E_SDN.DGN 02/2003

'E' SIZE - 44x34
COMPUTER GENERATED - MANUAL CHANGES NOT PERMITTED

08/02/2004 01:15:14 PM

R10344395

PLOTTED BY: kanderso
C:\Work\dms\50170\HLW\RPL\RP0008-0.dgn

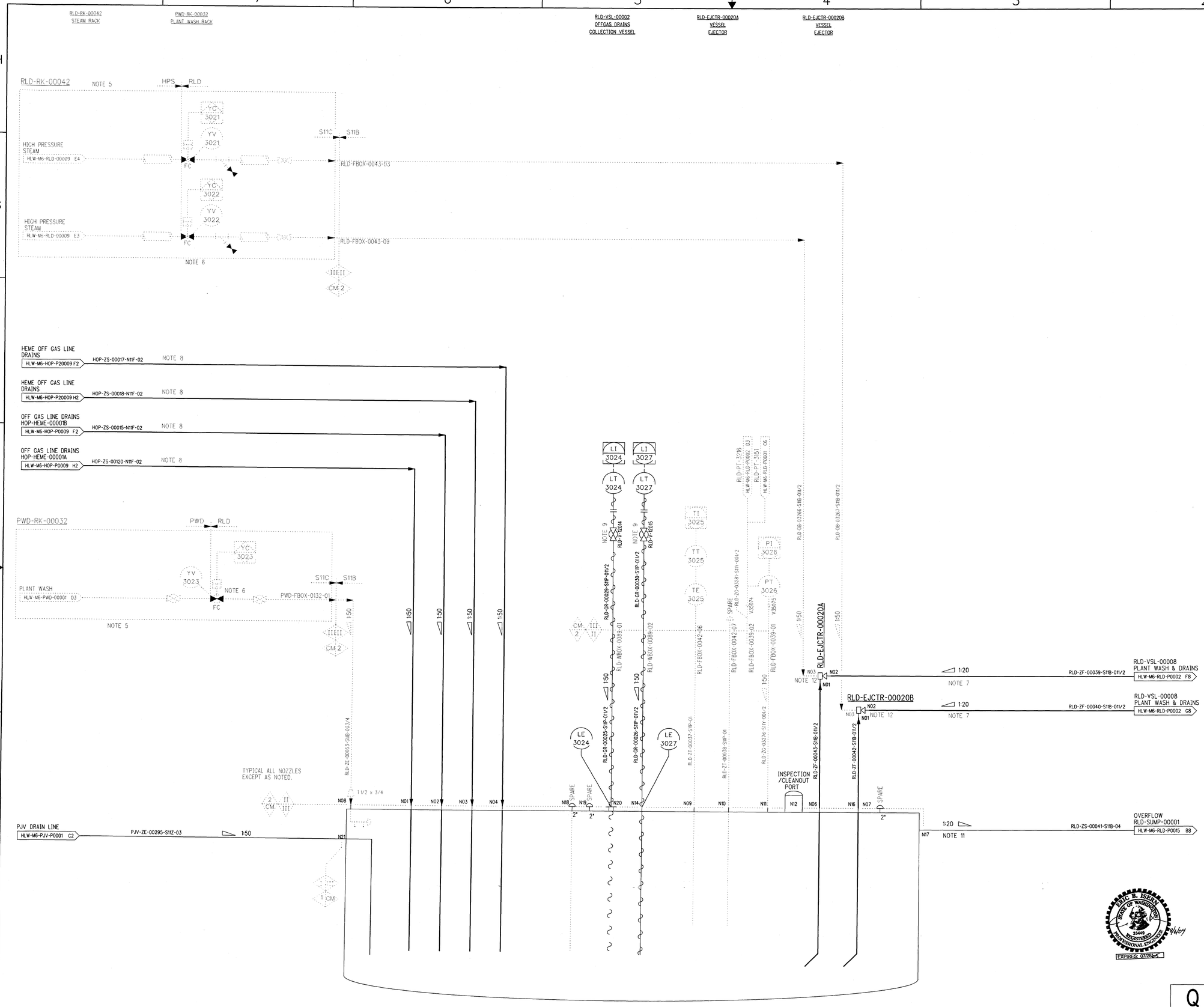

NOTES:

THE FOLLOWING NOTES ARE GENERAL NOTES FOR RLD SYSTEM

1. SEE DRAWINGS 24590-WTP-M6-50-P0001 THROUGH 24590-WTP-M6-50-P0006 FOR GENERAL NOTES, SYMBOLS AND LEGEND.
2. NOT USED.
3. NOT USED.
4. DELETED.
5. INTERNAL RACK CONFIGURATION IS SUBJECT TO OPTIMIZATION OF PIPE LAYOUT.

THE FOLLOWING NOTES ARE SPECIFIC TO THIS DRAWING

6. STEAM SUPPLY VALVES AND PLANT WASH VALVES MUST BE A MINIMUM OF 35 FEET ABOVE THE VESSEL OVERFLOW LEVEL.
7. EJECTOR DISCHARGE PIPING TO HAVE A MINIMUM LENGTH OF 24 INCHES OF STRAIGHT PIPE BEFORE FIRST BEND.
8. THIS LINE IS QUALITY LEVEL QL-2 AND SEISMIC CATEGORY SC-III.
9. RADAR GUIDE TUBE IS TO BE ROUTED TO TRANSMITTER. A FULL PORT BALL VALVE IS REQUIRED FOR ISOLATION PURPOSES AT TRANSMITTER END OF GUIDE TUBE.
10. CONTENTS OF THIS DOCUMENT ARE DANGEROUS WASTE PERMIT AFFECTING.
11. VESSEL VENTS THROUGH THE OVERFLOW TO THE C5 HVAC SYSTEM.
12. EJECTORS ARE COMMERCIAL QUALITY LEVEL AND SEISMIC CATEGORY SC-III.
13. DELETED.
14. THE PORTIONS OF THIS DRAWING SHOWN IN PHANTOM ARE CONSIDERED NON-PERMIT AFFECTING AND ARE NOT SUBJECT TO THE REGULATORY REQUIREMENTS OF THE WAC CODE FOR THE DANGEROUS WASTE PERMIT TO THE EXTENT THAT THOSE PORTIONS DO NOT IMPACT DANGEROUS WASTE AREAS/OPERATIONS.

HOLD/OPEN ITEMS:

1. DELETED.
2. DELETED.

REFERENCES:

1. PROCESS FLOW DIAGRAM, HLW VITRIFICATION LIQUID WASTE EFFLUENT (SYSTEM RLD) (SHEET 1), 24590-HLW-M5-V17T-P0007001.
2. PROCESS FLOW DIAGRAM, HLW VITRIFICATION LIQUID WASTE EFFLUENT (SYSTEM RLD) (SHEET 2), 24590-HLW-M5-V17T-P0007002.
3. 24590-HLW-3YD-RLD-00001: "SYSTEM DESCRIPTION FOR HLW RADIOACTIVE LIQUID WASTE DISPOSAL (SYSTEM RLD)"

PLEASE NOTE THAT SOURCE, SPECIAL NUCLEAR AND BYPRODUCT MATERIALS, AS DEFINED IN THE ATOMIC ENERGY ACT OF 1954 (AEA), ARE REGULATED AT THE U.S. DEPARTMENT OF ENERGY (DOE) FACILITIES EXCLUSIVELY BY DOE ACTING PURSUANT TO ITS AEA AUTHORITY. DOE ASSERTS, THAT PURSUANT TO THE AEA, IT HAS SOLE AND EXCLUSIVE RESPONSIBILITY AND AUTHORITY TO REGULATE SOURCE, SPECIAL NUCLEAR, AND BYPRODUCT MATERIAL AT DOE-OWNED NUCLEAR FACILITIES. INFORMATION CONTAINED HEREIN ON RADIONUCLIDES IS PROVIDED FOR PROCESS DESCRIPTION PURPOSES ONLY.

ERIC B. ISAKSEN — STATE OF WASHINGTON — 33449 — REGISTERED PROFESSIONAL ENGINEER — 8/6/04 — EXPIRES: 07/06/05

Q — QUALITY DESIGNATOR

REV	DESCRIPTION	ORG	CHKD	RVWD	APVD	DATE
0	ISSUED FOR PERMITTING USE					8/6/04

REVISION HISTORY

ISSUED BY BPP-WTP PCP INIT DATE 8/6/04 — ISSUE STAMP

PROJECT No.	24590
SITE	HANFORD
AREA	200E
BUILDING No.	30

	BY	DATE
ORIGINATOR		8/6/04
CHECKER		8-6-04
APPROVER		8-6-04
REVIEWER		8-6-04

CONTENT APPLICABLE TO ALARA? [X] YES [ ] NO
ADR NO. N/A REV:

BECHTEL

RIVER PROTECTION PROJECT
WASTE TREATMENT PLANT
2435 STEVENS CENTER PLACE
RICHLAND, WA 99352

CONTRACT No: DE-AC27-01RV14136

P&ID - HLW RADIOACTIVE LIQUID WASTE DISPOSAL SYSTEM OFFGAS DRAINS COLLECTION VESSEL

SCALE: NONE

24590-HLW-M6-RLD-P0014

REV 0

'E' SIZE - 44x34
COMPUTER GENERATED - MANUAL CHANGES NOT PERMITTED

R10344763

08/06/2004 12:39:25 PM

PLOTED BY: konderso

FORM E_SDN.DGN 02/2003

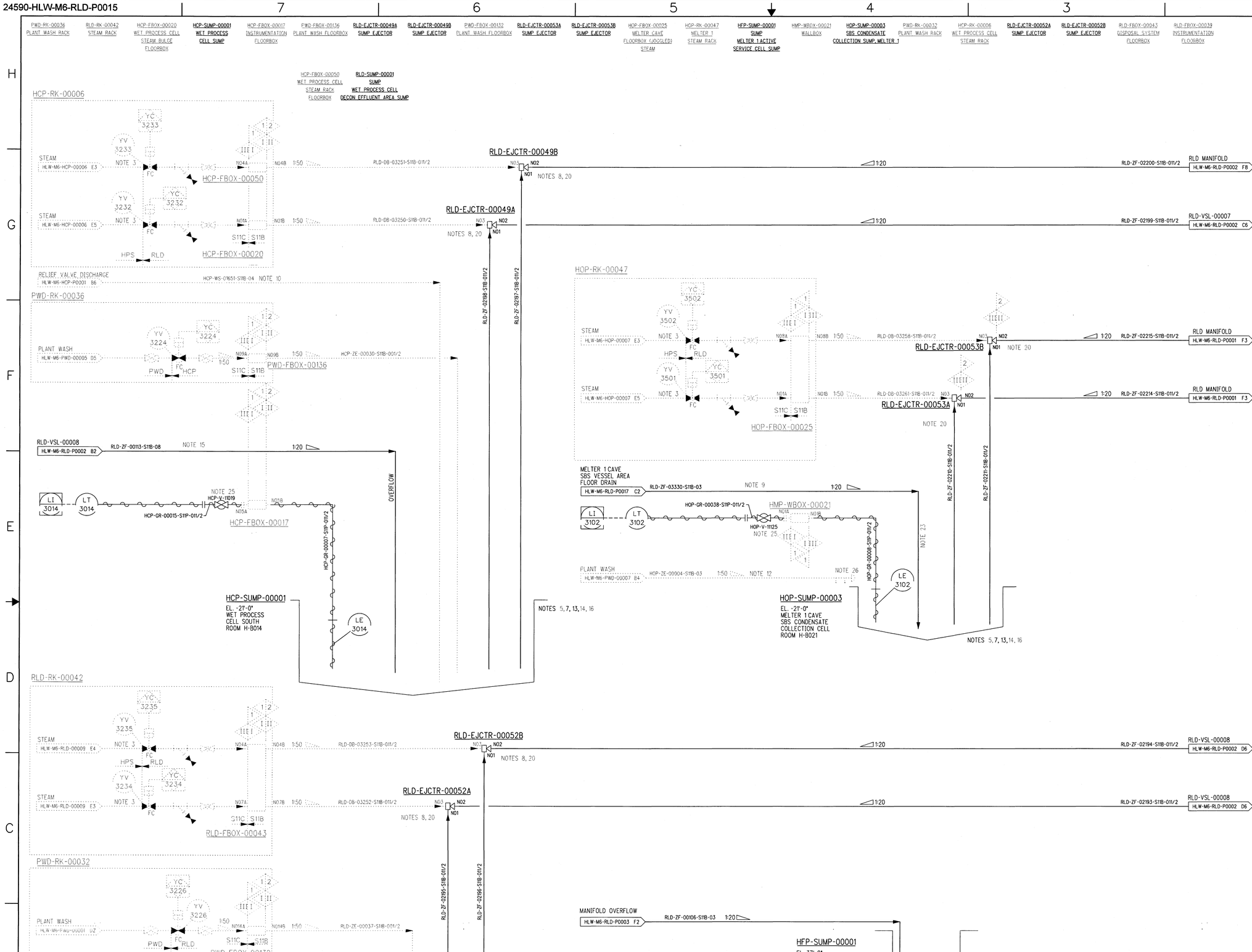

NOTES:

THE FOLLOWING NOTES ARE GENERAL NOTES FOR RLD SYSTEM.

1. SEE DRAWINGS 24590-WTP-M6-50-P0001 THROUGH 24590-WTP-M6-50-P0006 FOR GENERAL NOTES, SYMBOLS AND LEGEND.
2. NOT USED.

THE FOLLOWING NOTES ARE SPECIFIC TO THIS DRAWING.

3. STEAM SUPPLY VALVES MUST BE MINIMUM OF 35'-0" ABOVE THE EJECTOR.
4. NOT USED.
5. PROVIDE 3/8" ±1/8" CLEARANCE BETWEEN BOTTOM OF EJECTOR SUCTION PIPE AND SUMP LINER.
6. THE COMPONENT UTILIZED FOR THE SUMP TO PIPING INTERFACE WILL BE PROVIDED BY CSA. ALL PIPING WILL BE PROVIDED BY PLANT DESIGN.
7. SUMP WILL BE COVERED WITH STAINLESS STEEL REMOVABLE SCREEN PLATE TO PROTECT PIPING SYSTEM FROM DEBRIS. MAX SCREEN SIZE 1/4" DIAMETER HOLE. SUMP AND SUMP COVERS TO BE PROVIDED BY CSA.
8. EJECTORS ARE COMMERCIAL GRADE AND SEISMIC CATEGORY III.
9. PIPING IS COMMERCIAL GRADE AND SEISMIC CATEGORY III.
10. PIPING IS QUALITY LEVEL 2 AND SEISMIC CATEGORY II.
11. DELETED.
12. PIPING IS QUALITY LEVEL 2 AND SEISMIC CATEGORY III.
13. SUMPS SHOWN WITH CONE BOTTOM ARE TO BE PROVIDED WITH STAINLESS STEEL LINERS.
14. ALL SUMPS ARE QUALITY LEVEL 1 AND SEISMIC CATEGORY I.
15. PIPING IS QUALITY LEVEL 1 AND SEISMIC CATEGORY I.
16. DELETED.
17. PUMP SHALL BE INTERFACED WITH 3" DIA. DRAIN PIPE. THE DRAIN PIPE IS TO BE EMBEDDED IN CONCRETE AS REQUIRED TO PROVIDE SHIELDING FROM RADIATION.
18. NOT USED.
19. NOT USED.
20. EJECTOR DISCHARGE PIPING TO HAVE A MINIMUM LENGTH OF 24 INCHES OF STRAIGHT PIPE BEFORE 1ST BEND.
21. NOT USED.
22. CONTENTS OF THIS DOCUMENT ARE DANGEROUS WASTE PERMIT AFFECTING.
23. OVERFLOW PIPE SHOULD BE 6" FROM BOTTOM OF THE SUMP.
24. DELETED.
25. RADAR GUIDE TUBE IS TO BE ROUTED TO TRANSMITTER. A FULL PORT VALVE IS REQUIRED FOR ISOLATION PURPOSES AT TRANSMITTER END OF GUIDE TUBE.
26. DELETED.
27. THE PORTIONS OF THIS DRAWING SHOWN IN PHANTOM ARE CONSIDERED NON-PERMIT AFFECTING AND ARE NOT SUBJECT TO THE REGULATORY REQUIREMENTS OF THE WAC CODE FOR THE DANGEROUS WASTE PERMIT TO THE EXTENT THAT THOSE PORTIONS DO NOT IMPACT DANGEROUS WASTE AREAS/OPERATIONS.

HOLD/OPEN ITEMS:

1. DELETED.
2. DELETED.
3. DELETED.
4. DELETED.
5. DELETED.

REFERENCES:

1. 24590-HLW-3YD-RLD-00001, "SYSTEM DESCRIPTION FOR HLW RADIOACTIVE LIQUID WASTE DISPOSAL (SYSTEM RLD)."
2. 24590-HLW-M5-V17T-P0007001, "PROCESS FLOW DIAGRAM HLW VITRIFICATION LIQUID WASTE EFFLUENT (SYSTEM RLD) (SHEET 1)."
3. 24590-HLW-M5-V17T-P0007002, "PROCESS FLOW DIAGRAM HLW VITRIFICATION LIQUID WASTE EFFLUENT (SYSTEM RLD) (SHEET 2)."

PLEASE NOTE THAT SOURCE, SPECIAL NUCLEAR AND BYPRODUCT MATERIALS, AS DEFINED IN THE ATOMIC ENERGY ACT OF 1954 (AEA), ARE REGULATED AT THE U.S. DEPARTMENT OF ENERGY (DOE) FACILITIES EXCLUSIVELY BY DOE ACTING PURSUANT TO ITS AEA AUTHORITY. DOE ASSERTS, THAT PURSUANT TO THE AEA, IT HAS SOLE AND EXCLUSIVE RESPONSIBILITY AND AUTHORITY TO REGULATE SOURCE, SPECIAL NUCLEAR, AND BYPRODUCT MATERIAL AT DOE-OWNED NUCLEAR FACILITIES. INFORMATION CONTAINED HEREIN ON RADIONUCLIDES IS PROVIDED FOR PROCESS DESCRIPTION PURPOSES ONLY.

Q
QUALITY DESIGNATOR

REV	DESCRIPTION	ORG	CHKD	RVWD	APVD	DATE
0	ISSUED FOR PERMITTING USE					8/5/04

REVISION HISTORY

ISSUED BY RPP-WTP PDC 12.2.1.1.E.1 UNIT DATE
ISSUE STAMP

PROJECT No.	24590	
SITE	HANFORD	
AREA	200E	
BUILDING No.	30	
	BY	DATE
ORIGINATOR		8/5/04
CHECKER		8-5-04
APPROVER		8-5-04
REVIEWER		8-5-04

CONTENT APPLICABLE TO ALARA? [X] YES [ ] NO
ADR NO. N/A REV:

ERIC B. ISBERG, STATE OF WASHINGTON, 33449, REGISTERED PROFESSIONAL ENGINEER
EXPIRES: 07/28/04

BECHTEL

RIVER PROTECTION PROJECT
WASTE TREATMENT PLANT
2435 STEVENS CENTER PLACE
RICHLAND, WA 99352

CONTRACT No: DE-AC27-01RV14136

P&ID - HLW
RADIOACTIVE LIQUID WASTE DISPOSAL SYSTEM MISCELLANEOUS SUMPS

SCALE: NONE

24590-HLW-M6-RLD-P0015

REV 0

"E" SIZE - 44x34
COMPUTER GENERATED - MANUAL CHANGES NOT PERMITTED

R10344396

08/05/2004 03:36:06 PM

PLOTTED BY: eewebb
C:\Work\sms05070\HLW\M6\RLDP0015r0.dgn

FORM E_SDN.DGN 02/2003

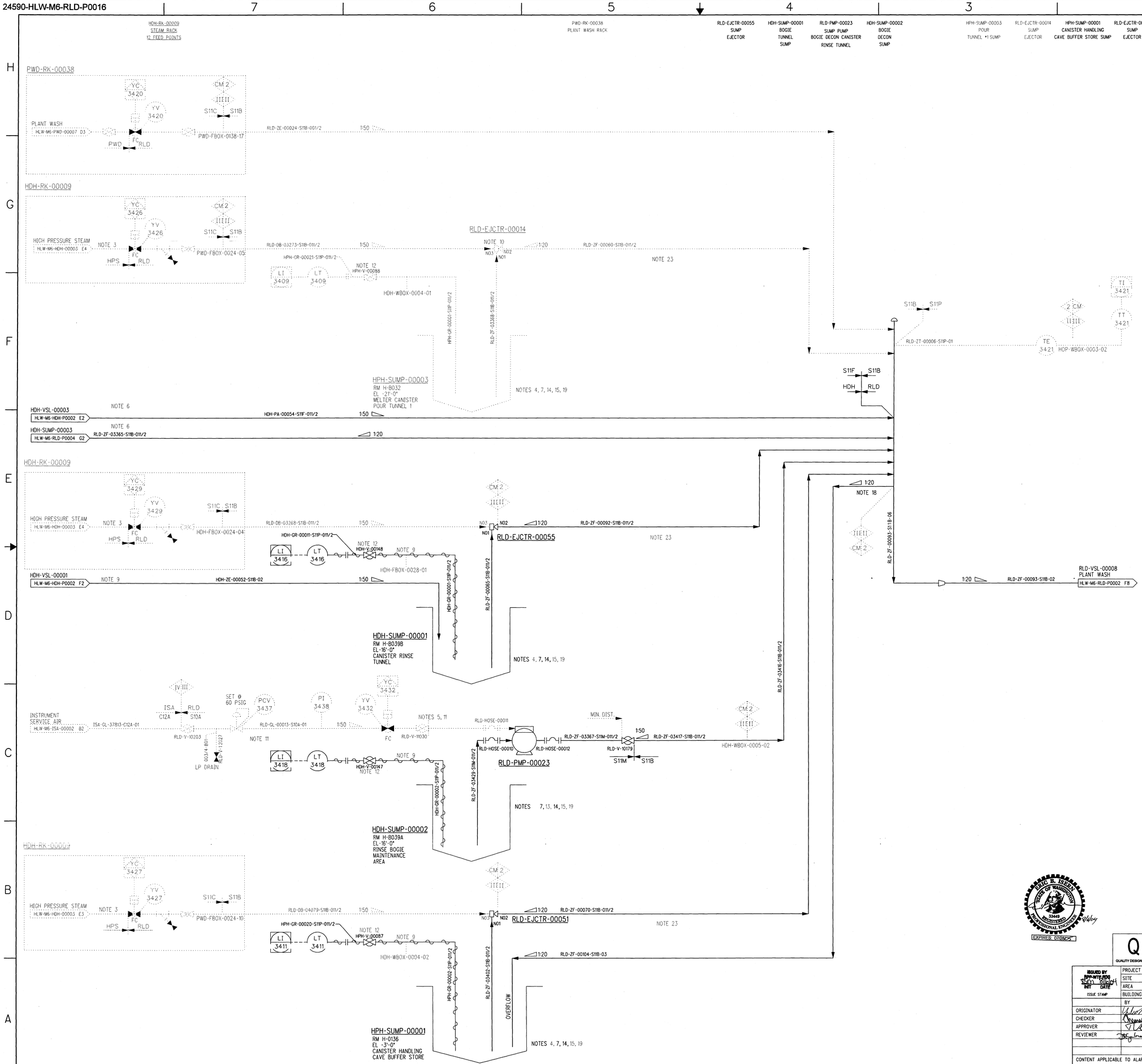

NOTES:

THE FOLLOWING NOTES ARE GENERAL NOTES FOR RLD SYSTEM.

1. SEE DRAWINGS 24590-WTP-M6-50-P0001 THROUGH 24590-WTP-M6-50-P0006 FOR GENERAL NOTES, SYMBOLS AND LEGEND.

THE FOLLOWING NOTES ARE SPECIFIC TO THIS DRAWING.

2. NOT USED.
3. STEAM SUPPLY VALVES MUST BE A MINIMUM OF 35'-0" ABOVE THE EJECTOR.
4. PROVIDE 3/8" ±1/8" CLEARANCE BETWEEN BOTTOM OF EJECTOR SUCTION PIPE AND SUMP LINER.
5. VENTILATION SEAL WASHER REQUIRED ON ALL SLEEVED PIPE PENETRATIONS THAT SEGREGATE CONTAMINATION CONTROL ZONES I.E., C3 TO C5.
6. PIPING IS SEISMIC CATEGORY II AND QUALITY LEVEL 2.
7. SUMP WILL BE COVERED WITH STAINLESS STEEL REMOVABLE SCREEN PLATE TO PROTECT PIPING SYSTEM FROM DEBRIS. MAX SCREEN SIZE 1/4" DIAMETER HOLE. SUMP COVERS TO BE PROVIDED BY CSA.
8. CONTENTS OF THIS DOCUMENT ARE DANGEROUS WASTE PERMIT AFFECTING.
9. PIPING IS COMMERCIAL GRADE AND SEISMIC CATEGORY III.
10. EJECTOR IS COMMERCIAL GRADE AND SEISMIC CATEGORY III.
11. AIR SUPPLY VALVE PRESSURE REGULATOR, PRESSURE INDICATOR AND ISOLATION VALVE FOR DIAPHRAGM PUMP SHALL BE LOCATED IN C2/R2 AREA.
12. RADAR GUIDE IS TO BE ROUTED TO TRANSMITTER. A FULL PORT BALL VALVE IS REQUIRED FOR ISOLATION PURPOSES AT TRANSMITTER END OF GUIDE TUBE.
13. PROVIDE 1/2" ±1/8" CLEARANCE BETWEEN BOTTOM OF SUCTION PIPE AND SUMP BASE.
14. SUMPS SHOWN WITH CONE BOTTOM ARE PROVIDED WITH STAINLESS STEEL LINERS.
15. ALL SUMPS ARE QUALITY LEVEL 1 AND SEISMIC CATEGORY I.
16. NOT USED.
17. PIPING IS QUALITY LEVEL 2 AND SEISMIC CATEGORY III.
18. OVERFLOW LINE IS LOCATED UNDER ALL INCOMING LINES TO THE MANIFOLD.
19. DELETED.
20. NOT USED.
21. NOT USED.
22. NOT USED.
23. EJECTOR DISCHARGE PIPING TO HAVE A MINIMUM LENGTH OF 24 INCHES OF STRAIGHT PIPE BEFORE 1ST BEND.
24. DELETED.
25. DELETED.
26. THE PORTIONS OF THIS DRAWING SHOWN IN PHANTOM ARE CONSIDERED NON-PERMIT AFFECTING AND ARE NOT SUBJECT TO THE REGULATORY REQUIREMENTS OF THE WAC CODE FOR THE DANGEROUS WASTE PERMIT TO THE EXTENT THAT THOSE PORTIONS DO NOT IMPACT DANGEROUS WASTE AREAS/OPERATIONS.

HOLD/OPEN ITEMS:

1. DELETED.
2. DELETED.
3. DELETED.
4. DELETED.
5. DELETED.
6. DELETED.
7. DELETED.

REFERENCES:

1. 24590-HLW-3YD-RLD-00001, "SYSTEM DESCRIPTION FOR HLW RADIOACTIVE LIQUID WASTE DISPOSAL (SYSTEM RLD)"
2. 24590-HLW-M5-V17T-P0007001, "PROCESS FLOW DIAGRAM HLW VITRIFICATION LIQUID WASTE EFFLUENT (SYSTEM RLD) (SHEET 1)".
3. 24590-HLW-M5-V17T-P0007002, "PROCESS FLOW DIAGRAM HLW VITRIFICATION LIQUID WASTE EFFLUENT (SYSTEM RLD) (SHEET 2)".

PLEASE NOTE THAT SOURCE, SPECIAL NUCLEAR AND BYPRODUCT MATERIALS, AS DEFINED IN THE ATOMIC ENERGY ACT OF 1954 (AEA), ARE REGULATED AT THE U.S. DEPARTMENT OF ENERGY (DOE) FACILITIES EXCLUSIVELY BY DOE ACTING PURSUANT TO ITS AEA AUTHORITY. DOE ASSERTS, THAT PURSUANT TO THE AEA, IT HAS SOLE AND EXCLUSIVE RESPONSIBILITY AND AUTHORITY TO REGULATE SOURCE, SPECIAL NUCLEAR, AND BYPRODUCT MATERIAL AT DOE-OWNED NUCLEAR FACILITIES. INFORMATION CONTAINED HEREIN ON RADIONUCLIDES IS PROVIDED FOR PROCESS DESCRIPTION PURPOSES ONLY.

ERIC B. LEBON — STATE OF WASHINGTON — 33449 — REGISTERED PROFESSIONAL ENGINEER — EXPIRES: 01/18/05

REV	DESCRIPTION	ORG	CHKD	RVWD	APVD	DATE
0	ISSUED FOR PERMITTING USE					8/6/04

REVISION HISTORY

Q — QUALITY DESIGNATOR

ISSUED BY BPP-WTP/PM 15300 8/6/04 INIT DATE — ISSUE STAMP

	PROJECT No.	24590
	SITE	HANFORD
	AREA	200E
	BUILDING No.	30

	BY	DATE
ORIGINATOR		8/6/04
CHECKER		8/6/04
APPROVER		8-6-04
REVIEWER		8-6-04

CONTENT APPLICABLE TO ALARA? [X] YES [ ] NO
ADR NO. N/A REV:

BECHTEL

RIVER PROTECTION PROJECT
WASTE TREATMENT PLANT
2435 STEVENS CENTER PLACE
RICHLAND, WA 99352

CONTRACT No: DE-AC27-01RV14136

P&ID - HLW RADIOACTIVE LIQUID WASTE DISPOSAL SYSTEM MISCELLANEOUS SUMPS

SCALE: NONE

24590-HLW-M6-RLD-P0016

REV 0

R10344782

08/06/2004 12:55:13 PM

PLOTTED BY: konderso
C:\Work\dms0570\HLW\RLD\P0016r0.dgn

FORM E_SDN.DGN 02/2003

'E' SIZE - 44x34
COMPUTER GENERATED - MANUAL CHANGES NOT PERMITTED

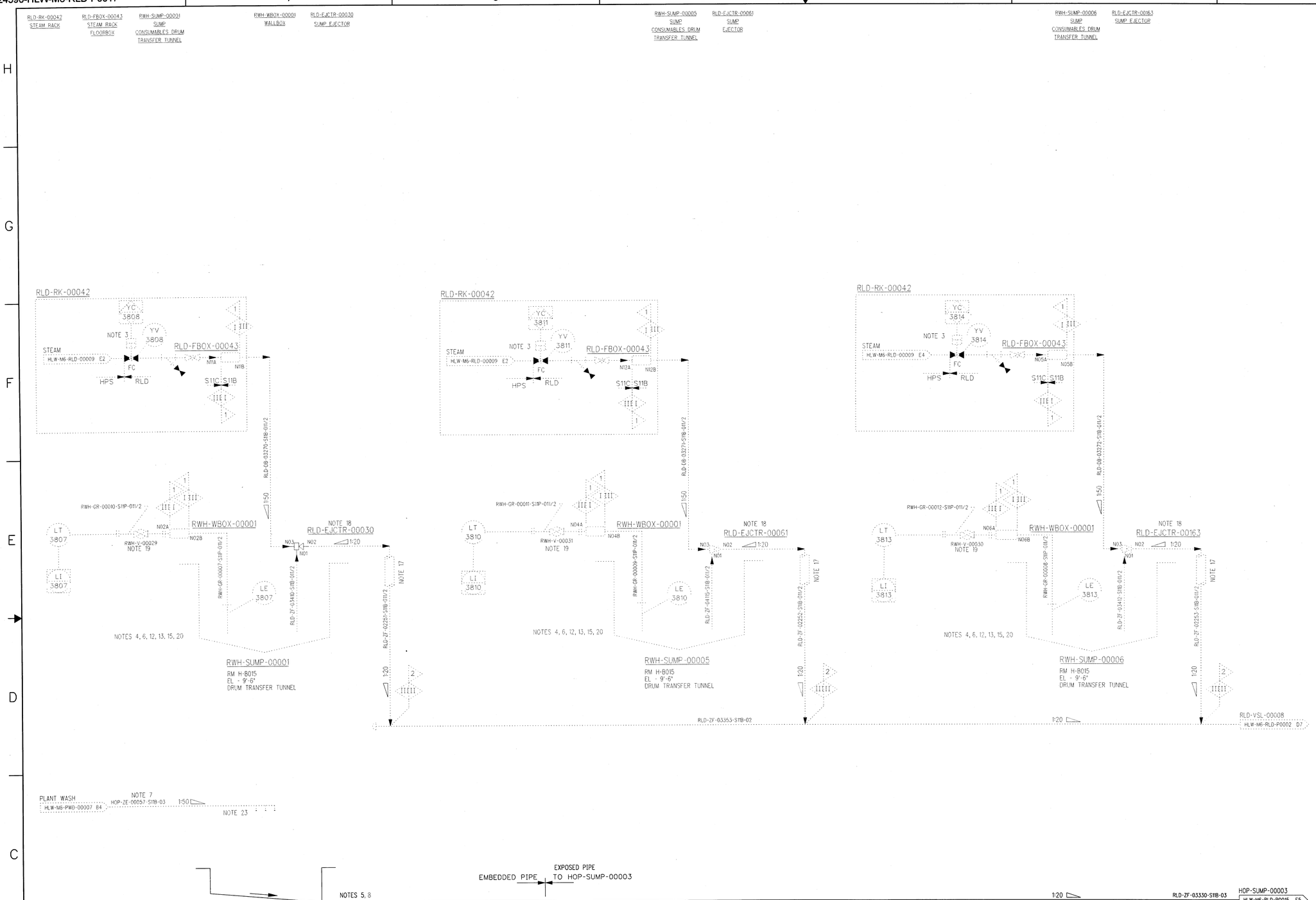

NOTES:

THE FOLLOWING NOTES ARE GENERAL NOTES FOR RLD SYSTEM.

1. SEE DRAWINGS 24590-WTP-M6-50-P0001 THROUGH 24590-WTP-M6-50-P0006 FOR GENERAL NOTES, SYMBOLS AND LEGEND.

THE FOLLOWING NOTES ARE SPECIFIC TO THIS DRAWING.

2. NOT USED.
3. STEAM SUPPLY VALVE MUST BE A MINIMUM OF 35'-0" ABOVE THE EJECTOR.
4. PROVIDE 3/8" ±1/8" CLEARANCE BETWEEN BOTTOM OF EJECTOR SUCTION PIPE AND SUMP BOTTOM.
5. THE SLOPED CATCH AREA SHALL BE ROUTED WITH 3" DIA. DRAIN PIPE. THE DRAIN PIPE IS TO BE EMBEDDED IN CONCRETE AS REQUIRED TO PROVIDE SHIELDING FROM RADIATION.
6. SUMP WILL BE COVERED WITH STAINLESS STEEL REMOVABLE SCREEN PLATE TO PROTECT PIPING SYSTEM FROM DEBRIS. MAX SCREEN SIZE 1/4" DIAMETER HOLE. SUMP AND SUMP COVERS TO BE PROVIDED BY CSA.
7. PIPING IS SEISMIC CATEGORY II AND QUALITY LEVEL 2.
8. PIPING IS SEISMIC CATEGORY III AND COMMERCIAL GRADE.
9. NOT USED.
10. DELETED.
11. NOT USED.
12. PROVIDE 1/2" CLEARANCE BETWEEN BOTTOM OF LEVEL METER WAVE GUIDE AND SUMP BASE.
13. ALL SUMPS ARE QUALITY LEVEL 1 AND SEISMIC CATEGORY I.
14. NOT USED.
15. DELETED.
16. NOT USED.
17. DELETED.
18. EJECTOR DISCHARGE PIPING TO HAVE A MINIMUM LENGTH OF 24 INCHES OF STRAIGHT PIPE BEFORE FIRST BEND.
19. RADAR GUIDE IS TO BE ROUTED TO TRANSMITTER. A FULL PORT BALL VALVE IS REQUIRED FOR ISOLATION PURPOSE AT TRANSMITTER END OF GUIDE TUBE.
20. SUMPS SHOWN WITH CONE BOTTOM ARE TO BE PROVIDED WITH STAINLESS STEEL LINERS.
21. CONTENTS OF THIS DOCUMENT ARE DANGEROUS WASTE PERMIT AFFECTING.
22. DELETED.
23. DELETED.
24. THE PORTIONS OF THIS DRAWING SHOWN IN PHANTOM ARE CONSIDERED NON-PERMIT AFFECTING AND ARE NOT SUBJECT TO THE REGULATORY REQUIREMENTS OF THE WAC CODE FOR THE DANGEROUS WASTE PERMIT TO THE EXTENT THAT THOSE PORTIONS DO NOT IMPACT DANGEROUS WASTE AREAS/OPERATIONS.

HOLD/OPEN ITEM

1. DELETED.
2. DELETED.

REFERENCES:

1. 24590-HLW-3YD-RLD-00001, "SYSTEM DESCRIPTION FOR HLW RADIOACTIVE LIQUID WASTE DISPOSAL (SYSTEM RLD)".
2. 24590-HLW-M5-V17T-P0007001, PROCESS FLOW DIAGRAM HLW VITRIFICATION LIQUID WASTE EFFLUENT (SYSTEM RLD) (SHEET 1)".
3. 24590-HLW-M5-V17T-P0007002, PROCESS FLOW DIAGRAM HLW VITRIFICATION LIQUID WASTE EFFLUENT(SYSTEM RLD) (SHEET 2)".

ERIC B. ISEBN
STATE OF WASHINGTON
33449
REGISTERED PROFESSIONAL ENGINEER
8/5/04
EXPIRES: 07/28/04

PLEASE NOTE THAT SOURCE, SPECIAL NUCLEAR AND BYPRODUCT MATERIALS, AS DEFINED IN THE ATOMIC ENERGY ACT OF 1954 (AEA), ARE REGULATED AT THE U.S. DEPARTMENT OF ENERGY (DOE) FACILITIES EXCLUSIVELY BY DOE ACTING PURSUANT TO ITS AEA AUTHORITY. DOE ASSERTS, THAT PURSUANT TO THE AEA, IT HAS SOLE AND EXCLUSIVE RESPONSIBILITY AND AUTHORITY TO REGULATE SOURCE, SPECIAL NUCLEAR, AND BYPRODUCT MATERIAL AT DOE-OWNED NUCLEAR FACILITIES. INFORMATION CONTAINED HEREIN ON RADIONUCLIDES IS PROVIDED FOR PROCESS DESCRIPTION PURPOSES ONLY.

Q
QUALITY DESIGNATOR

REV	DESCRIPTION	ORG	CHKD	RVWD	APVD	DATE
0	ISSUED FOR PERMITTING USE	JM	GMM	TV	TV	8/5/04

REVISION HISTORY

ISSUED BY RPP-WTP PDC
SIGN DATE
ISSUE STAMP

PROJECT No.	24590
SITE	HANFORD
AREA	200E
BUILDING No.	30

	BY	DATE
ORIGINATOR		8-2-04
CHECKER		8/2/04
APPROVER		8/5/04
REVIEWER		8-5-04

CONTENT APPLICABLE TO ALARA? [X] YES [ ] NO
ADR NO. N/A REV:

BECHTEL
RIVER PROTECTION PROJECT
WASTE TREATMENT PLANT
2435 STEVENS CENTER PLACE
RICHLAND, WA 99352

CONTRACT No: DE-AC27-01RV14136

P&ID - HLW RADIOACTIVE LIQUID WASTE DISPOSAL SYSTEM MISCELLANEOUS SUMPS

SCALE: NONE

24590-HLW-M6-RLD-P0017

REV 0

FORM E_SDN.DGN 02/2003

'E' SIZE - 44x34
COMPUTER GENERATED - MANUAL CHANGES NOT PERMITTED

R10344397

07/29/2004 04:46:08 PLOTTED BY: konderso
C:\Work\dma05070\HLW\M6\RLDP0017-0.dgn

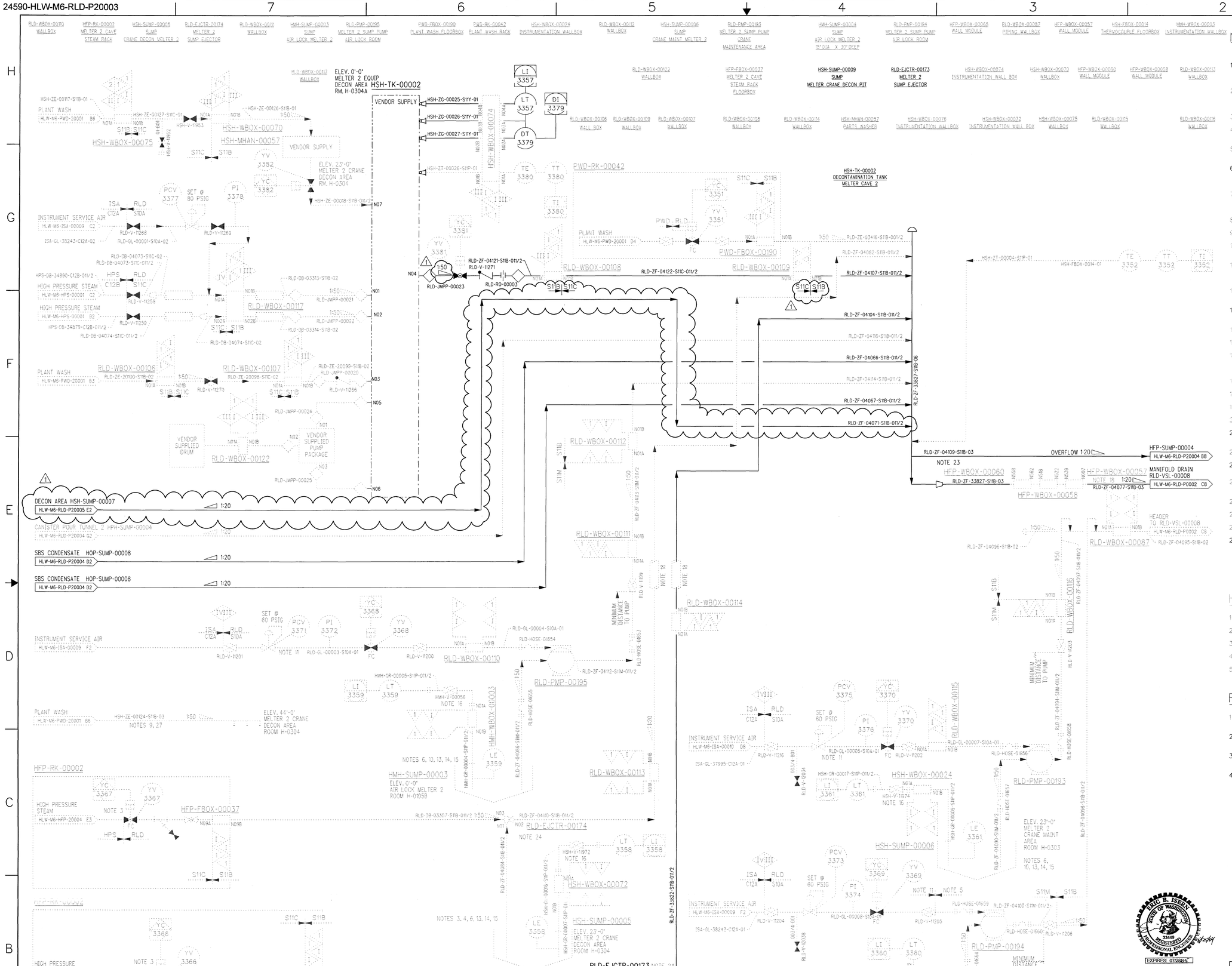

NOTES:

THE FOLLOWING NOTES ARE GENERAL NOTES FOR RLD SYSTEM.

1. SEE DRAWINGS 24590-WTP-M6-50-P0001 THROUGH 24590-WTP-M6-50-P0006 FOR GENERAL NOTES, SYMBOLS AND LEGEND.
2. NOT USED.

THE FOLLOWING NOTES ARE SPECIFIC TO THIS DRAWING.

3. STEAM VALVE MUST BE A MINIMUM OF 35'-0" ABOVE THE EJECTOR.
4. PROVIDE 3/8 "±1/8 CLEARANCE BETWEEN BOTTOM OF EJECTOR SUCTION PIPE AND SUMP BOTTOM.
5. VENTILATION SEAL WASHER REQUIRED ON ALL PIPE PENETRATIONS THAT SEGREGATE CONTAMINATION CONTROL ZONES (i.e. C3 TO C5).
6. SUMP PROVIDED WITH REMOVABLE STAINLESS STEEL SCREEN PLATE TO PROTECT PIPING SYSTEM FROM DEBRIS. MAX. SCREEN SIZE IS 1/4" DIAMETER HOLE. SUMP COVERS TO BE PROVIDED BY CSA.
7. ALL PIPING AND COMPONENTS ASSOCIATED WITH SUMPS ARE SEISMIC CATEGORY III AND COMMERCIAL QUALITY, UNLESS NOTED OTHERWISE.
8. NOT USED.
9. THIS LINE IS SEISMIC CATEGORY II AND QUALITY LEVEL 2.
10. PROVIDE 1/2 "±1/8 CLEARANCE BETWEEN BOTTOM OF PUMP SUCTION PIPE AND SUMP BASE.
11. AIR SUPPLY VALVE, PRESSURE REGULATOR, PRESSURE INDICATOR AND ISOLATION VALVE FOR DIAPHRAGM PUMP SHALL BE LOCATED IN C2/R2 AREA.
12. ALL SYSTEMS AND COMPONENTS ON THIS DRAWING ARE NON-QUALITY RELATED, EXCEPT AS IDENTIFIED IN NOTES 14 & 23.
13. SUMPS SHOWN WITH CONE BOTTOM ARE PROVIDED WITH STAINLESS STEEL LINERS. SUMPS SHOWN WITH FLAT BOTTOM HAVE NO LINERS.
14. ALL SUMPS ARE QUALITY LEVEL 1 SEISMIC CATEGORY I.
15. DELETED.
16. RADAR GUIDE IS TO BE ROUTED TO TRANSMITTER. A FULL PORT BALL VALVE IS REQUIRED FOR ISOLATION PURPOSES AT THE TRANSMITTER END OF GUIDE TUBE.
17. NOT USED.
18. DELETED.
19. NOT USED.
20. NOT USED.
21. CONTENTS OF THIS DOCUMENT ARE DANGEROUS WASTE PERMIT AFFECTING.
22. NOT USED.
23. OVERFLOW LINE IS LOCATED UNDER ALL INCOMING LINES TO THE MANIFOLD.
24. EJECTOR DISCHARGE PIPING TO HAVE A MINIMUM LENGTH OF 24 INCHES OF STRAIGHT PIPE BEFORE 1ST BEND.
25. DELETED.
26. DELETED.
27. DELETED.
28. THE PORTIONS OF THIS DRAWING SHOWN IN PHANTOM ARE CONSIDERED NON-PERMIT AFFECTING AND ARE NOT SUBJECT TO THE REGULATORY REQUIREMENTS OF THE WAC CODE FOR THE DANGEROUS WASTE PERMIT TO THE EXTENT THAT THOSE PORTIONS DO NOT IMPACT DANGEROUS WASTE AREAS/OPERATIONS.

HOLD/OPEN ITEMS:

1. DELETED.
2. DELETED.
3. DELETED.
4. DELETED.
5. DELETED.

REFERENCES:

1. 24590-HLW-3YD-RLD-00001, "SYSTEM DESCRIPTION FOR HLW RADIOACTIVE LIQUID WASTE DISPOSAL (SYSTEM RLD)".
2. 24590-HLW-M5-V17T-P0007001, "PROCESS FLOW DIAGRAM HLW VITRIFICATION LIQUID WASTE EFFLUENT (SYSTEM RLD) (SHEET 1)."
3. 24590-HLW-M5-V17T-P0007002, "PROCESS FLOW DIAGRAM HLW VITRIFICATION LIQUID WASTE EFFLUENT (SYSTEM RLD) (SHEET 2)."
4. 24590-HLW-M6-RLD-P0003, "P&ID - HLW RADIOACTIVE LIQUID WASTE DISPOSAL SYSTEM DECONTAMINATION TANK & SUMPS".

ERIC B. ISKEN
STATE OF WASHINGTON
33449
REGISTERED PROFESSIONAL ENGINEER
8/25/04
EXPIRES: 07/28/05

PLEASE NOTE THAT SOURCE, SPECIAL NUCLEAR AND BYPRODUCT MATERIALS, AS DEFINED IN THE ATOMIC ENERGY ACT OF 1954 (AEA), ARE REGULATED AT THE U.S. DEPARTMENT OF ENERGY (DOE) FACILITIES EXCLUSIVELY BY DOE ACTING PURSUANT TO ITS AEA AUTHORITY. DOE ASSERTS, THAT PURSUANT TO THE AEA, IT HAS SOLE AND EXCLUSIVE RESPONSIBILITY AND AUTHORITY TO REGULATE SOURCE, SPECIAL NUCLEAR, AND BYPRODUCT MATERIAL AT DOE-OWNED NUCLEAR FACILITIES. INFORMATION CONTAINED HEREIN ON RADIONUCLIDES IS PROVIDED FOR PROCESS DESCRIPTION PURPOSES ONLY.

Q
QUALITY DESIGNATOR

REV	DESCRIPTION	ORG	CHKD	RVWD	APVD	DATE
1	ISSUED FOR PERMITTING USE	JM		SC	TV	8-25-04
0	ISSUED FOR PERMITTING USE	YM	TMG	DMY	TV	8/05/04

REVISION HISTORY

ISSUED BY RPP-WTP PDR 12-28-04
INIT DATE
ISSUE STAMP

PROJECT No.	24590	
SITE	HANFORD	
AREA	200E	
BUILDING No.	30	
	BY	DATE
ORIGINATOR	YUKO MAY	8/05/04
CHECKER	THOMAS GALIOTO	8/05/04
APPROVER	T. VALENTINO	8/05/04
REVIEWER	D. M. YARBROUGH	8/05/04

CONTENT APPLICABLE TO ALARA? [X] YES [ ] NO
ADR NO. N/A REV:

BECHTEL

RIVER PROTECTION PROJECT
WASTE TREATMENT PLANT
2435 STEVENS CENTER PLACE
RICHLAND, WA 99352

CONTRACT No: DE-AC27-01RV14136

P&ID - HLW RADIOACTIVE LIQUID WASTE DISPOSAL SYSTEM DECONTAMINATION TANK & SUMPS - MELTER 2

SCALE: NONE
24590-HLW-M6-RLD-P20003
REV 1

R10365918

"E" SIZE - 44x34
COMPUTER GENERATED - MANUAL CHANGES NOT PERMITTED

FORM E_SDN.DGN 02/2003

08/24/2004 07:58:47 AM
PLOTTED BY: handerso
C:\Work\dms50070\HLW\M6RLDP20003r1.dgn

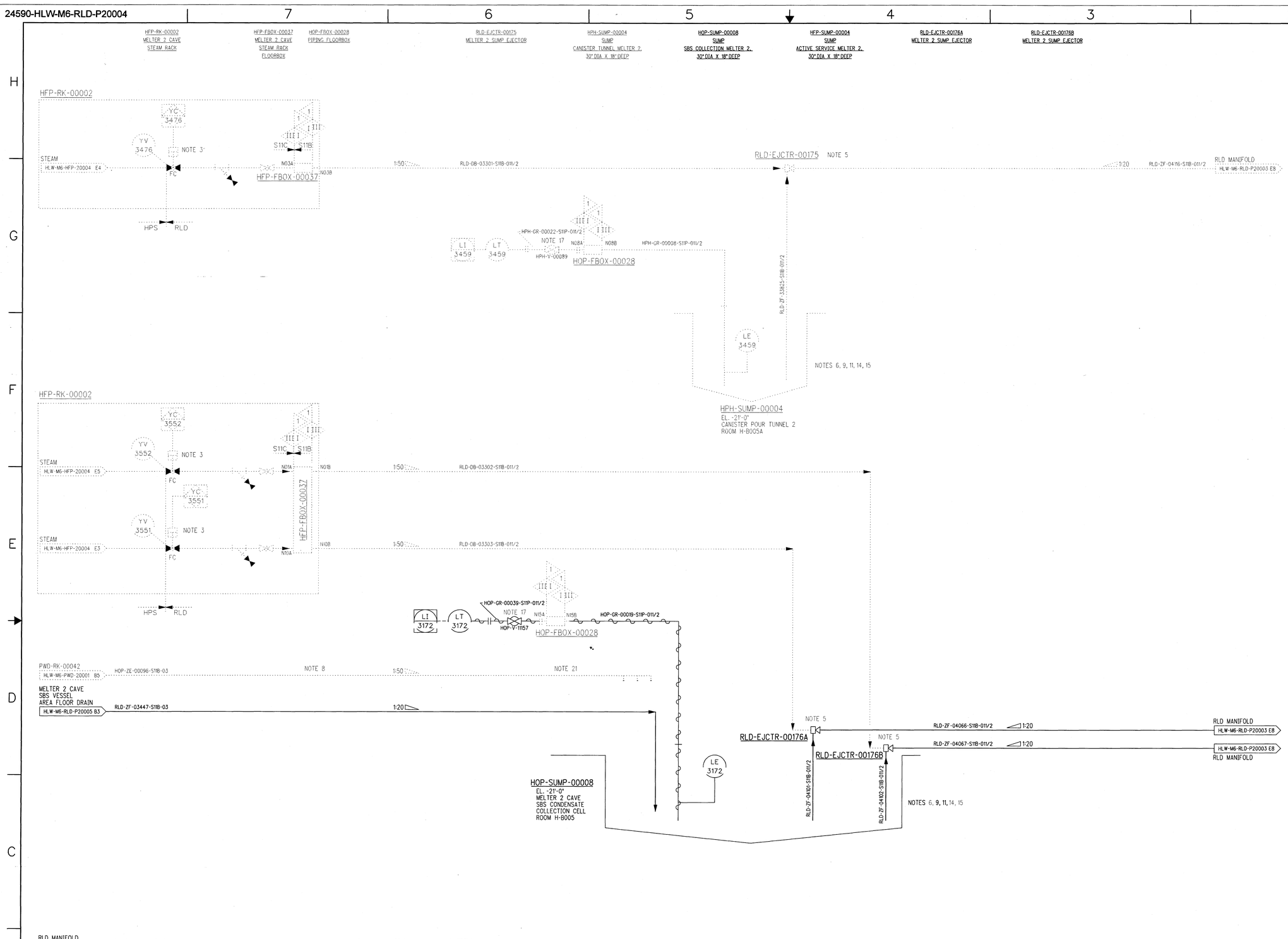

NOTES:

THE FOLLOWING NOTES ARE GENERAL NOTES FOR RLD SYSTEM

1. SEE DRAWINGS 24590-WTP-M6-50-P0001 THROUGH 24590-WTP-M6-50-P0006 FOR GENERAL NOTES, SYMBOLS AND LEGEND.
2. NOT USED.

THE FOLLOWING NOTES ARE SPECIFIC TO THIS DRAWING

3. STEAM SUPPLY VALVES MUST BE A MINIMUM OF 35'-0" ABOVE THE EJECTOR.
4. CONTENTS OF THIS DOCUMENT ARE DANGEROUS WASTE PERMIT AFFECTING.
5. EJECTOR DISCHARGE PIPING TO HAVE A MINIMUM LENGTH OF 24 INCHES OF STRAIGHT PIPE BEFORE FIRST BEND.
6. PROVIDE 3/8"±1/8 CLEARANCE BETWEEN BOTTOM OF EJECTOR SUCTION PIPE AND SUMP LINER.
7. ALL SUMP ASSOCIATED PIPING AND COMPONENTS ARE SEISMIC CATEGORY III AND COMMERCIAL QUALITY UNLESS OTHERWISE NOTED.
8. THIS LINE IS SEISMIC CATEGORY II AND QUALITY LEVEL 2.
9. SUMP PROVIDED WITH REMOVABLE STAINLESS STEEL SCREEN PLATE TO PROTECT PIPING SYSTEM FROM DEBRIS. MAX. SCREEN SIZE IS 1/4" DIAMETER HOLE. SUMP COVERS TO BE PROVIDED BY CSA.
10. THE SUMP SHALL BE PROVIDED WITH 3" DIA DRAIN PIPE. THE DRAIN FROM THE SUMP TO BE ROUTED EMBEDDING IT IN CONCRETE AS REQUIRED TO PROVIDE SHIELDING FROM RADIATION.
11. SUMPS SHOWN WITH CONE BOTTOM ARE TO BE PROVIDED WITH STAINLESS STEEL LINERS.
12. DELETED.
13. NOT USED.
14. ALL SUMPS ARE SEISMIC CATEGORY I AND QUALITY LEVEL 1.
15. DELETED.
16. NOT USED
17. RADAR GUIDE IS TO BE ROUTED TO TRANSMITTER. A FULL PORT BALL VALVE IS REQUIRED FOR ISOLATION PURPOSES AT TRANSMITTER END OF GUIDE TUBE.
18. DELETED.
19. NOT USED.
20. NOT USED.
21. DELETED.
22. THE PORTIONS OF THIS DRAWING SHOWN IN PHANTOM ARE CONSIDERED NON-PERMIT AFFECTING AND ARE NOT SUBJECT TO THE REGULATORY REQUIREMENTS OF THE WAC CODE FOR THE DANGEROUS WASTE PERMIT TO THE EXTENT THAT THOSE PORTIONS DO NOT IMPACT DANGEROUS WASTE AREAS/OPERATIONS.

HOLDS/OPEN ITEMS:

1. DELETED.
2. DELETED.

REFERENCES:

1. 24590-HLW-3YD-RLD-00001, "SYSTEM RLD: RADIOACTIVE LIQUID WASTE DISPOSAL SYSTEM DESCRIPTION."
2. 24590-HLW-M5-V17T-P0007001, "PROCESS FLOW DIAGRAM HLW VITRIFICATION LIQUID WASTE EFFLUENT (SYSTEM RLD) (SHEET 1)".
3. 24590-HLW-M5-V17T-P0007002, "PROCESS FLOW DIAGRAM HLW VITRIFICATION LIQUID WASTE EFFLUENT (SYSTEM RLD) (SHEET 2).

PLEASE NOTE THAT SOURCE, SPECIAL NUCLEAR AND BYPRODUCT MATERIALS, AS DEFINED IN THE ATOMIC ENERGY ACT OF 1954 (AEA), ARE REGULATED AT THE U.S. DEPARTMENT OF ENERGY (DOE) FACILITIES EXCLUSIVELY BY DOE ACTING PURSUANT TO ITS AEA AUTHORITY. DOE ASSERTS, THAT PURSUANT TO THE AEA, IT HAS SOLE AND EXCLUSIVE RESPONSIBILITY AND AUTHORITY TO REGULATE SOURCE, SPECIAL NUCLEAR, AND BYPRODUCT MATERIAL AT DOE-OWNED NUCLEAR FACILITIES. INFORMATION CONTAINED HEREIN ON RADIONUCLIDES IS PROVIDED FOR PROCESS DESCRIPTION PURPOSES ONLY.

Q
QUALITY DESIGNATOR

REVISION HISTORY

REV	DESCRIPTION	ORG	CHKD	RVWD	APVD	DATE
0	ISSUED FOR PERMITTING USE	GM				8/5/04

ISSUED BY HPF-WTP PDCS
D. A. WILL
UNIT DATE
ISSUE STAMP

PROJECT No.	24590	
SITE	HANFORD	
AREA	200E	
BUILDING No.	30	

	BY	DATE
ORIGINATOR		8/5/04
CHECKER		8-5-04
APPROVER		8-5-04
REVIEWER		8-5-04

CONTENT APPLICABLE TO ALARA? [X] YES [ ] NO
ADR NO. N/A REV:

STATE OF WASHINGTON
ERIC B. ISERN
33449
REGISTERED PROFESSIONAL ENGINEER
8/5/04
EXPIRES: 07/28/2004

BECHTEL

RIVER PROTECTION PROJECT
WASTE TREATMENT PLANT
2435 STEVENS CENTER PLACE
RICHLAND, WA 99352

CONTRACT No: DE-AC27-01RV14136

P&ID - HLW RADIOACTIVE LIQUID WASTE DISPOSAL SYSTEM MISCELLANEOUS SUMPS MELTER 2

SCALE: NONE

24590-HLW-M6-RLD-P20004

REV 0

"E" SIZE - 44x34
COMPUTER GENERATED - MANUAL CHANGES NOT PERMITTED

R10344399

08/05/2004 03:35:03 PM

PLOTTED BY: eerstb
PLOT NAME: ...\M6\RLDP20004-0.dgn

FORM E_SDN.DGN 02/2003

24590-HLW-M6-RLD-P20005

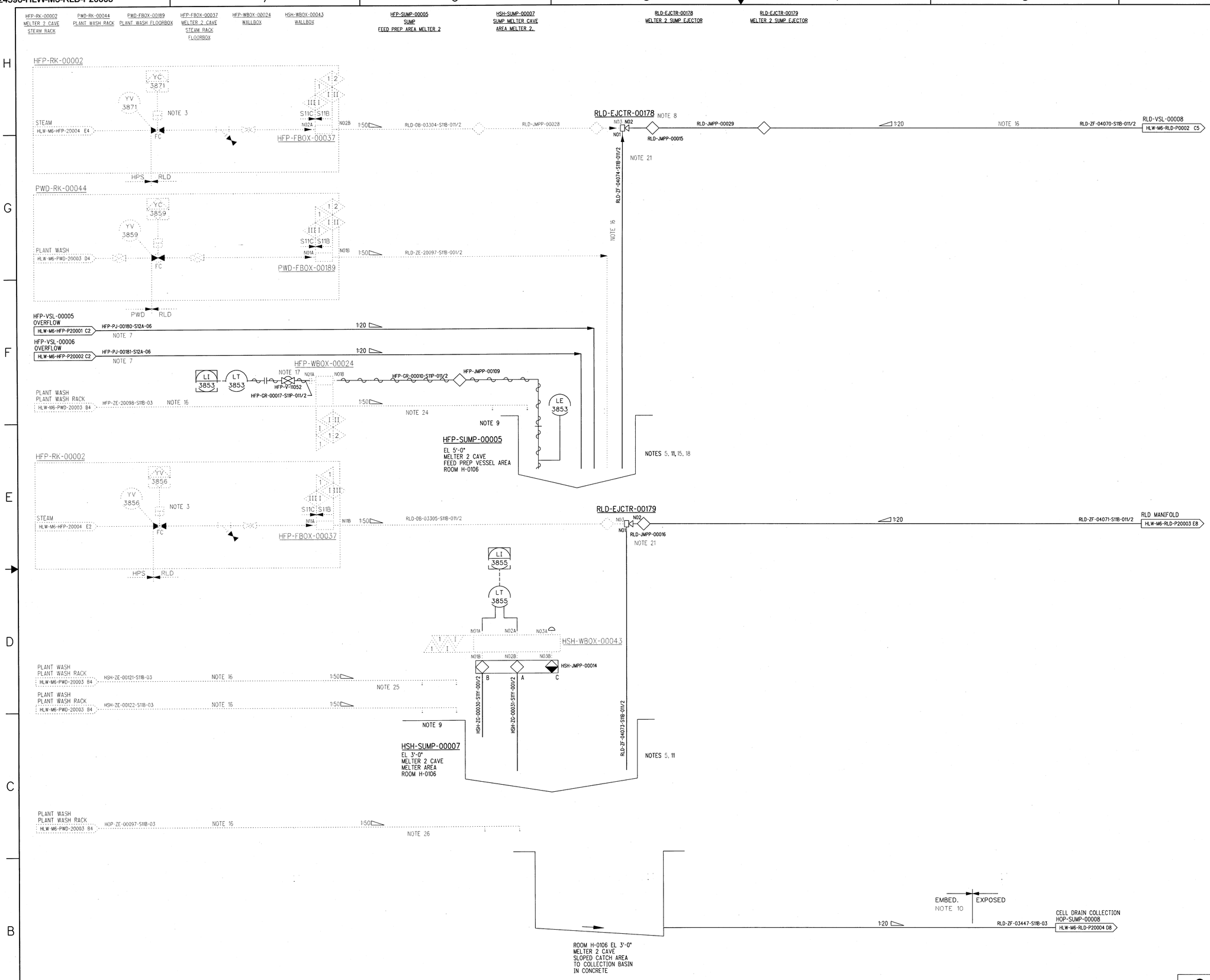

NOTES:

THE FOLLOWING NOTES ARE GENERAL NOTES FOR RLD SYSTEM

1. SEE DRAWINGS 24590-WTP-M6-50-P0001 THROUGH 24590-WTP-M6-50-P0006 FOR GENERAL NOTES, SYMBOLS AND LEGEND.
2. NOT USED.

THE FOLLOWING NOTES ARE SPECIFIC TO THIS DRAWING

3. STEAM SUPPLY VALVES MUST BE 35'-0" MIN ABOVE EJECTOR.
4. CONTENTS OF THIS DOCUMENT ARE DANGEROUS WASTE PERMIT AFFECTING.
5. PROVIDE ⅜" ±1/8" CLEARANCE BETWEEN BOTTOM OF EJECTOR SUCTION PIPE AND SUMP LINER.
6. ALL SUMP ASSOCIATED PIPING AND COMPONENTS ARE SEISMIC CATEGORY III AND COMMERCIAL GRADE UNLESS OTHERWISE NOTED.
7. THIS LINE IS QUALITY LEVEL 1 AND SEISMIC CATEGORY I.
8. EJECTOR IS SEISMIC CATEGORY III AND COMMERCIAL GRADE.
9. SUMP PROVIDED WITH REMOVABLE STAINLESS STEEL SCREEN PLATE TO PROTECT PIPING SYSTEM FROM DEBRIS. MAX. SCREEN SIZE IS ¼" DIAMETER HOLE. SUMP COVERS TO BE PROVIDED BY CSA.
10. THE BERM AREA SHALL BE PROVIDED WITH 3" DIA DRAIN PIPE. THE DRAIN PIPE IS TO BE ROUTED BY EMBEDDING IT IN CONCRETE AS REQUIRED.
11. SUMPS SHOWN WITH CONE BOTTOM ARE TO BE PROVIDED WITH STAINLESS STEEL LINERS.
12. DELETED.
13. ALL SUMPS ARE QUALITY LEVEL 1.
14. ALL SUMPS ARE SEISMIC CATEGORY I.
15. DELETED.
16. THIS LINE IS SEISMIC CATEGORY II AND QUALITY LEVEL 2.
17. RADAR GUIDE IS TO BE ROUTED TO TRANSMITTER. A FULL PORT BALL VALVE IS REQUIRED FOR ISOLATION PURPOSES AT TRANSMITTER END OF GUIDE TUBE.
18. PROVIDE ½" CLEARANCE BETWEEN BOTTOM OF LEVEL METER WAVE GUIDE AND SUMP BASE.
19. DELETED.
20. NOT USED.
21. EJECTOR DISCHARGE PIPING TO HAVE A MINIMUM LENGTH OF 24 INCHES OF STRAIGHT PIPE BEFORE FIRST BEND.
22. NOT USED.
23. NOT USED.
24. DELETED.
25. DELETED.
26. DELETED.
27. THE PORTIONS OF THIS DRAWING SHOWN IN PHANTOM ARE CONSIDERED NON-PERMIT AFFECTING AND ARE NOT SUBJECT TO THE REGULATORY REQUIREMENTS OF THE WAC CODE FOR THE DANGEROUS WASTE PERMIT TO THE EXTENT THAT THOSE PORTIONS DO NOT IMPACT DANGEROUS WASTE AREAS/OPERATIONS.

HOLD/OPEN ITEMS:

1. DELETED.
2. DELETED.

REFERENCES:

1. 24590-HLW-3YD-RLD-00001, "SYSTEM RLD: RADIOACTIVE LIQUID WASTE DISPOSAL SYSTEM DESCRIPTION".
2. 24590-HLW-M5-V17T-P0007001, "PROCESS FLOW DIAGRAM HLW VITRIFICATION LIQUID WASTE EFFLUENT (SYSTEM RLD) (SHEET 1)".
3. 24590-HLW-M5-V17T-P0007002, "PROCESS FLOW DIAGRAM HLW VITRIFICATION LIQUID WASTE EFFLUENT (SYSTEM RLD) (SHEET 2)".

PLEASE NOTE THAT SOURCE, SPECIAL NUCLEAR AND BYPRODUCT MATERIALS, AS DEFINED IN THE ATOMIC ENERGY ACT OF 1954 (AEA), ARE REGULATED AT THE U.S. DEPARTMENT OF ENERGY (DOE) FACILITIES EXCLUSIVELY BY DOE ACTING PURSUANT TO ITS AEA AUTHORITY. DOE ASSERTS, THAT PURSUANT TO THE AEA, IT HAS SOLE AND EXCLUSIVE RESPONSIBILITY AND AUTHORITY TO REGULATE SOURCE, SPECIAL NUCLEAR, AND BYPRODUCT MATERIAL AT DOE-OWNED NUCLEAR FACILITIES. INFORMATION CONTAINED HEREIN ON RADIONUCLIDES IS PROVIDED FOR PROCESS DESCRIPTION PURPOSES ONLY.

Q
QUALITY DESIGNATOR

REVISION HISTORY

REV	DESCRIPTION	ORG	CHKD	RVWD	APVD	DATE
0	ISSUED FOR PERMITTING USE	JM	SM	DR	DV	8/5/04

ISSUED BY (PRO-WTP-ENG) 07/29/04
ISSUE STAMP

PROJECT No.	24590	
SITE	HANFORD	
AREA	200E	
BUILDING No.	30	
	BY	DATE
ORIGINATOR	Glen A. Mathis	8-2-04
CHECKER	Walter Mayer	8/2/04
APPROVER	D. V. Vitt	8/5/04
REVIEWER	Tilly Jones	8-5-04

CONTENT APPLICABLE TO ALARA? [X] YES [ ] NO
ADR NO. N/A REV:

ERIC B. ISSEN, STATE OF WASHINGTON, 35449, REGISTERED PROFESSIONAL ENGINEER, 8/5/04, EXPIRES: 07/28/05

BECHTEL

RIVER PROTECTION PROJECT
WASTE TREATMENT PLANT
2435 STEVENS CENTER PLACE
RICHLAND, WA 99352

CONTRACT No: DE-AC27-01RV14136

P&ID - HLW RADIOACTIVE LIQUID WASTE DISPOSAL SYSTEM MISCELLANEOUS SUMPS MELTER 2

SCALE: NONE

24590-HLW-M6-RLD-P20005

REV 0

'E' SIZE - 44x34
COMPUTER GENERATED - MANUAL CHANGES NOT PERMITTED

R10344400

07/29/2004 04:48:08 PM
PLOTTED BY: kanderso
C:\Work\Lims\50070\HLW\M6\RLD\P20005-0.dgn

FORM E_SDN.DGN 02/2003

Quarter Ending 9/30/2005 24590-HLW-PCN-ENV-05-005

Hanford Facility RCRA Permit Modification Notification Form

Part III, Chapter 10 and Attachment 51

Waste Treatment and Immobilization Plant

ISSUED BY
~~RPP-WTP-PDC~~

Index

Page 2 of 2: Hanford Facility RCRA Permit, Part III, Attachment 51, Appendix 10.2
Revise P&IDs 24590-HLW-M6-RLD-P0015, Rev 0; 24590-HLW-M6-RLD-P0017, Rev 0; 24590-HLW-M6-RLD-P20004, Rev 0; and 24590-HLW-M6-RLD-P20005, Rev 0 as noted

Submitted by Co-Operator:

D. Klein 8/22/05
D. Klein Date

Reviewed by ORP Program Office:

R. J. Schepens 8/31/05
R. J. Schepens Date

Hanford Facility RCRA Permit Modification Notification Form	
Unit: **Waste Treatment and Immobilization Plant**	Permit Part & Chapter: **Part III, Chapter 10 and Attachment 51**

Description of Modification:

The purpose of this modification is to incorporate the following changes to the permit RLD P&IDs identified below. These changes update these permit drawings to provide flexibility in addressing construction interferences while maintaining minimum slope requirements, and to otherwise make the permit drawings consistent with their corresponding source drawings.

- **24590-HLW-M6-RLD-P0015, Rev. 0:**
  - Add the following note applicable to the drain piping from HFP-SUMP-00001: "The drain pipe is embedded to provide shielding from radiation. Slope the embedded pipe at 1:20 unless constrained by physical limitations. If constrained by physical limitations the slope may be reduced to 1:50".
  - Add the following note: "The required batch sequences, permissives, interlocks, alarms and operator interface points are described in the software requirements specification for RLD radioactive liquid waste disposal system, 24590-HLW-RLD-T0001 (to be issued)."
  - Add the following to note 25: "For radar installation see drawings 24590-WTP-J8-50-00001 and 24590-WTP-J8-50-00004, 'HLW Instrument Installation Detail Radar Pipe Antenna Sump Assembly.' Provide ½" clearance between bottom of level meter wave guide and sump base."
  - Add the following note applicable to floor drain line from Melter 1 cave SBS vessel area to HOP-SUMP-00003: "Line to be sloped at 1:20 unless constrained by physical limitations. If physical limitations exist, the slope may be reduced to 1:50."
  - The portion of this drawing depicting steam supply to ejectors for HCP-SUMP-00001, HOP-SUMP-00003, and RLD-SUMP-00001 downstream of the HPS/RLD interface is permit-affecting.
  - All references and notes are considered permit-affecting, except those that relate to portions of the drawing in phantom.

- **24590-HLW-M6-RLD-P0017, Rev. 0:**
  - Add the following applicable to in-cave portion of line from Rm. H-017 to HOP-SUMP-00003: "Pipe is sloped at 1:20 unless constrained by physical limitations. If physical limitations exist, the slope is reduced to 1:80 for routing of pipe".
  - Add the following to note 5: "Embedded pipe to be sloped at 1:20 unless constrained by physical limitations. If physical limitations exist, the slope may be reduced to 1:80."
  - Add the following note: "The required batch sequences, permissives, interlocks, alarms and operator interface points are described in the software requirements specification for RLD radioactive liquid waste disposal system, 24590-HLW-RLD-T0001 (to be issued)."
  - All references and notes are considered permit-affecting, except those that relate to portions of the drawing in phantom.

[1] Class 1 modifications requiring prior Agency approval.
[2] This is only an advanced notification of an intended Class [1] 1, 2, or 3 modification, this should be followed with a formal modification request, and consequently implement the required Public Involvement processes when required.

- **24590-HLW-M6-RLD-P20004, Rev. 0:**
  - Add the following note, applicable to steam ejector discharge lines from HOP-SUMP-00008, drain line from HFP-SUMP-00004 to RLD-VSL-00008, and drain line from Melter 2 cave sloped catch area to HOP-SUMP-00008: "Line to be sloped at 1:20 unless constrained by physical limitations. If the physical limitations exist, the slope may be reduced to 1:50".
  - Add the following note: "The required batch sequences, permissives, interlocks, alarms and operator interface points are described in the software requirements specification for RLD radioactive liquid waste disposal system, 24590-HLW-RLD-T0001 (to be issued)."
  - Add the following to note 3: "Ejector is seismic category III and commercial grade."
  - Add the following to note 17: "For radar installation see drawings 24590-WTP-J8-50-00001 and 24590-HLW-J8-50-00004."
  - Add the following note, applicable to the drain line from HFP-SUMP-00004 to RLD-VSL-00008: This line is seismic category II and commercial grade based on "seismic II over seismic I" routing."
  - Add the following note: "All piping and components are quality level CM and seismic category III unless otherwise noted."
  - Add the following note: "Joggled penetrations are quality level 1 and seismic category I."
  - The portion of this drawing depicting steam supply to ejectors for HOP-SUMP-00008 downstream of the HPS/RLD interface is permit-affecting.
  - All references and notes are considered permit-affecting, except those that relate to portions of the drawing in phantom.

- **24590-HLW-M6-RLD-P20005, Rev. 0:**
  - Add the following note, applicable to the embedded portion of the drain line from melter 2 cave sloped catch area to HOP-SUMP-00008: "The drain pipe is embedded to provide shielding from radiation. Slope the embedded pipe at 1:20 unless constrained by physical limitations. If constrained by physical limitations the slope may be reduced to 1:50".
  - Add the following note: "The required batch sequences, permissives, interlocks, alarms and operator interface points are described in the software requirements specification for RLD radioactive liquid waste disposal system, 24590-HLW-RLD-T0001 (to be issued)."
  - Add the following note: "Joggled penetrations and wall modules including internal piping are quality level 1 and seismic category I. Bulkhead structures are quality level 2 and seismic category II. Service piping within the bulkhead is commercial grade and seismic category III.
  - Add the following to note 17: "For radar installation see drawings 24590-WTP-J8-50-00001 and 24590-HLW-J8-50-00004, HLW Instrument Installation Detail Radar Pipe Antenna Sump Assembly. Provide ½" clearance between bottom of level meter wave guide and sump base."
  - Add the following note: "All pipe lines and piping components on this drawing are seismic category III and commercial grade unless otherwise noted."
  - The portion of this drawing depicting steam supply to ejectors for HSH-SUMP-00007 and HFP-SUMP-00005 downstream of the HPS/RLD interface is permit-affecting.
  - All references and notes are considered permit-affecting, except those that relate to portions of the drawing in phantom.

WAC 173-303-830 Modification Class: [1 2]	Class 1	Class [1]1	Class 2	Class 3
Please mark the Modification Class:		X		

Enter Relevant WAC 173-303-830, Appendix I Modification citation number: N/A

Enter wording of WAC 173-303-830, Appendix I Modification citation: N/A

In accordance with WAC 173-303-830(4)(d)(i), this modification notification is requested to be reviewed and approved as a Class [1]1 modification. WAC 173-303-830(4)(d)(ii)(A) states, "Class 1 modifications apply to minor changes that keep the permit current with routine changes to facility or its operation. These changes do not substantially alter the permit conditions or reduce the capacity of the facility to protect human health or the environment. In the case of Class 1 modifications, the director may require prior approval."

Modification Approved: [X] Yes [ ] No (state reason for denial)

Reason for denial:

Reviewed by Ecology:

S. Dahl Sep 6 05

Date

Attachment 51 – Appendix 10.4
High Level Waste Building
General Arrangement Drawings

Where information regarding treatment, management, and disposal of the radioactive source, byproduct material, and/or special nuclear components of mixed waste (as defined by the Atomic Energy Act of 1954, as amended) has been incorporated into this permit, it is not incorporated for the purpose of regulating the radiation hazards of such components under the authority of this permit and chapter 70.105 RCW. In the event of any conflict between Permit Condition III.10.A. and any statement relating to the regulation of source, special nuclear, and byproduct material contained in portions of the permit application that are incorporated into this permit, Permit Condition III.10.A. will prevail.

Additional appendices will be added to this appendix as new information is incorporated into this permit.

Drawings and Documents

Attachment 51 – Appendix 10.4

High Level Waste Building
General Arrangement Drawings

The following drawings have been incorporated into Appendix 10.4 and can be viewed at the Ecology Richland Office. **New drawings are in bold lettering**.

Drawing/Documents	**Description**
24590-HLW -P1- P01T-P0001, Rev 6	General Arrangement Plan El. -21
24590-HLW -P1- P01T-P0002, Rev 3	General Arrangement Plan El. 0
24590-HLW -P1- P01T-P0004, Rev 0	General Arrangement Plan El. 37
24590-HLW -P1- P01T-P0005, Rev 0	General Arrangement Plan El. 58
24590-HLW -P1- P01T-P0008, Rev 7	General Arrangement Sections A-A, B-B, C-C
24590-HLW -P1- P01T-P0009, Rev 6	General Arrangement Sections D-D, E-E, F-F
24590-HLW -P1- P01T-P0010, Rev 6	General Arrangement Sections G-G, H-H
24590-HLW -P1- P01T-P0011, Rev 7	General Arrangement Sections J-J, K-K
RESERVED	RESERVED

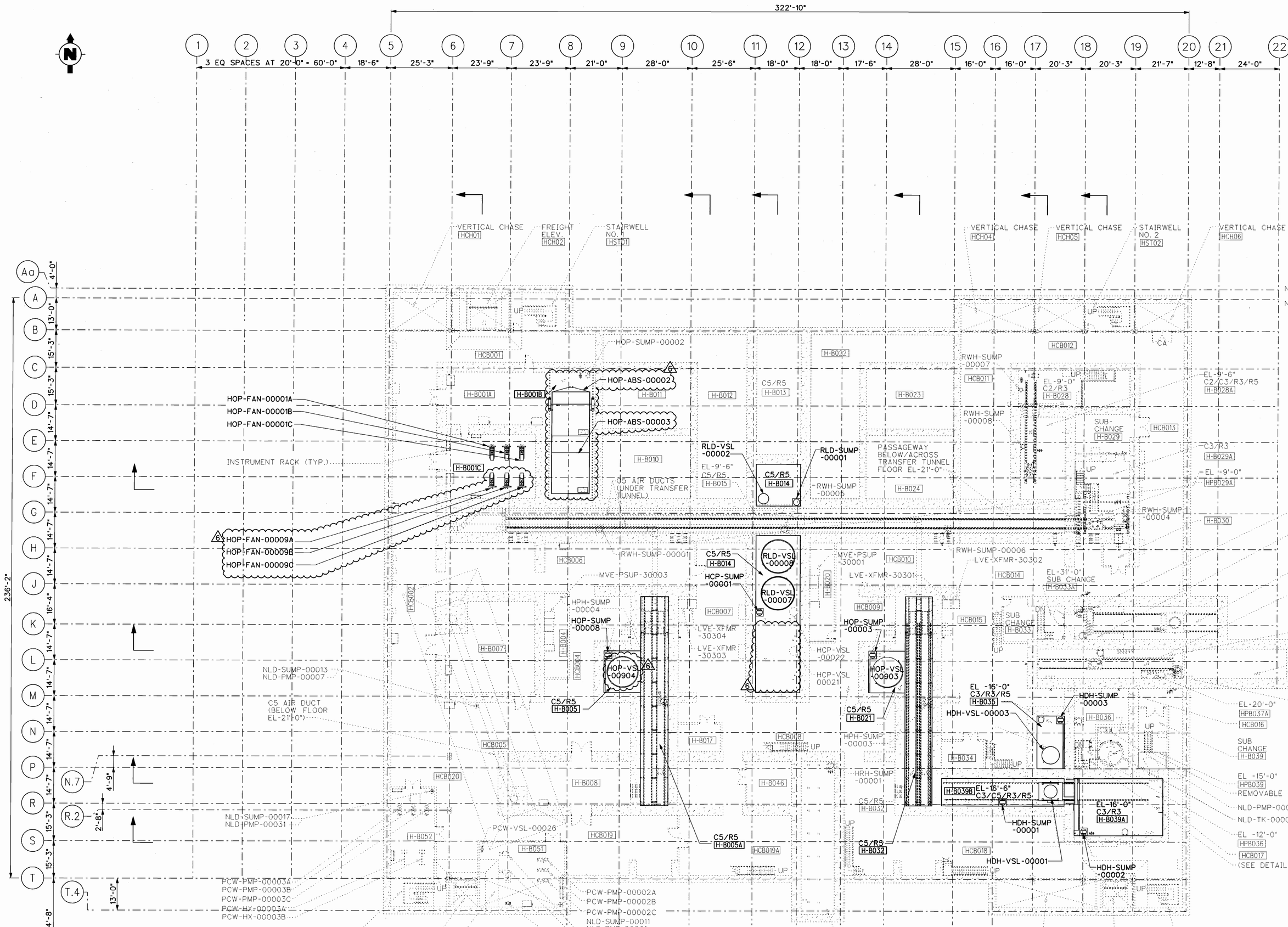

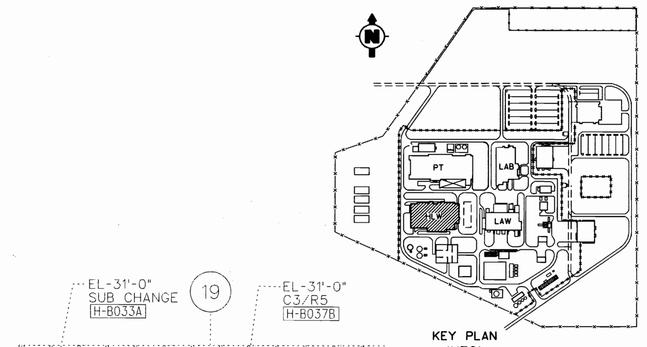

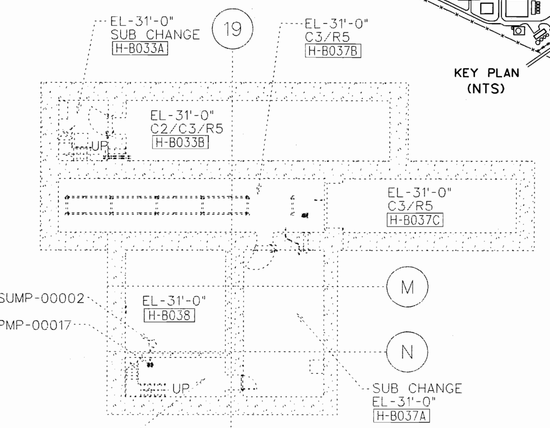

DETAIL 1
EL-31'-0" DETAIL

NOTES:

1. ALL OPERATING AREAS ARE DESIGNATED C2/R2 UNLESS NOTED OTHERWISE.
2. ALL SUB CHANGE ROOMS ARE DESIGNATED C2/C3/R2 UNLESS NOTED OTHERWISE.
3. DELETED.
4. DELETED.
5. CONTENTS OF THIS DOCUMENT ARE DANGEROUS WASTE PERMIT AFFECTING.
6. ADDITIONAL WALLS FOR COMMODITY ITS SEPARATION WILL BE ADDED AS REQUIRED BASED ON FINAL COMMODITY ROUTING.
7. THE PORTIONS OF THIS DRAWING SHOWN IN PHANTOM ARE CONSIDERED NON-PERMIT AFFECTING AND ARE NOT SUBJECT TO THE REGULATORY REQUIREMENTS OF THE WAC CODE FOR THE DANGEROUS WASTE PERMIT TO THE EXTENT THAT THOSE PORTIONS DO NOT IMPACT DANGEROUS WASTE AREAS/OPERATIONS.

HOLDS:

1. NOT USED
2. NOT USED
3. NOT USED
4. DELETED
5. DELETED

LEGEND:

CA	CONTROLLED ACCESS
EE	EMERGENCY EXIT
H-0101	ROOMS, CELLS, CAVES (VAULTS) AND TUNNELS
HC0102	CORRIDORS & CONNECTING VESTIBULES
HM0103	MEZZANINES
HP0104	PLATFORMS
HCH01	CHASES
H-A101	ANNEX
HST01	STAIRWELL
	EQUIPMENT REMOVAL/PULL SPACE OR LAYDOWN AREA
	CONCRETE
	CHECKERED PLATE
	GRATING SPAN
	CONSTRUCTION ACCESS

PLEASE NOTE THAT SOURCE, SPECIAL NUCLEAR AND BYPRODUCT MATERIALS, AS DEFINED IN THE ATOMIC ENERGY ACT OF 1954 (AEA), ARE REGULATED AT THE U.S. DEPARTMENT OF ENERGY (DOE) FACILITIES EXCLUSIVELY BY DOE ACTING PURSUANT TO ITS AEA AUTHORITY. DOE ASSERTS, THAT PURSUANT TO THE AEA, IT HAS SOLE AND EXCLUSIVE RESPONSIBILITY AND AUTHORITY TO REGULATE SOURCE, SPECIAL NUCLEAR, AND BYPRODUCT MATERIAL AT DOE-OWNED NUCLEAR FACILITIES. INFORMATION CONTAINED HEREIN ON RADIONUCLIDES IS PROVIDED FOR PROCESS DESCRIPTION PURPOSES ONLY.

REV	DESCRIPTION	ORG	CHKD	RVWD	APVD	DATE
6	ISSUED FOR PERMITTING USE. UPDATED HOP FANS AND HOP ABS TO MATCH VENDOR DRAWINGS. REMOVED HCP VESSELS 1 AND 2.	KAC	JM NML	WDM	JPV	08/04/04
5	ISSUED FOR PERMITTING USE. MOVED OFFGAS TO EL. 0', ADDED POUR TUNNELS, GHOSTED DRUM TRANSFER TUNNEL, MOVED HDH-VSL-00002. ADDED (PERMIT) TO TITLE	KAC	NML	DG	DNP	10/02/03
4	REISSUED FOR PERMITTING USE DUE TO ADDING CALL OUTS FOR FUTURE EQUIPMENT AND SUMPS.	KAC	NML	DG	DNP	05/14/03
3	REISSUED FOR PERMITTING USE DUE TO CHANGE IN POUR TUNNEL AND OFFGAS CLASSIFICATIONS.	TL	DG		MM SCF	12/11/02
2	REISSUED FOR PERMITTING USE DUE TO REMOVAL OF VESSEL RLD-VSL-00001.	TL	DG		MM SCF	09/08/02
0	ISSUED FOR PERMITTING USE.	TL	DG		MM SCF	04/08/02

REVISION HISTORY

ISSUED BY: RPS-WTP-PDC
UNIT: A2-2N
DATE:
ISSUE STAMP

PROJECT No.	24590	
SITE	HANFORD	
AREA	200E	
BUILDING No.	200A	
	BY	DATE
ORIGINATOR	T. LOGAN	4/08/02
CHECKER	D. GOTT	4/08/02
APPROVER	MARK MYATT/S C FOELBER	4/08/02
REVIEWER	N/A	

CONTENT APPLICABLE TO ALARA? [X] YES [ ] NO
ADR NO. N/A REV:

BECHTEL

RIVER PROTECTION PROJECT
WASTE TREATMENT PLANT
2435 STEVENS CENTER PLACE
RICHLAND, WA 99352

CONTRACT No: DE-AC27-01RV14136

HLW VITRIFICATION BUILDING GENERAL ARRANGEMENT (PERMIT) PLAN AT EL -21'-0"

SCALE: 1/16"=1'-0"

24590-HLW-P1-P01T-P0001

REV 6

'E' SIZE - 44x34
COMPUTER GENERATED - MANUAL CHANGES NOT PERMITTED

R10343981

08/04/2004 11:36:12 AM

C:\Work\cms00784\24590WLWP01TP0001(REV 6).dgn

FORM E_SDN.DGN 02/2003

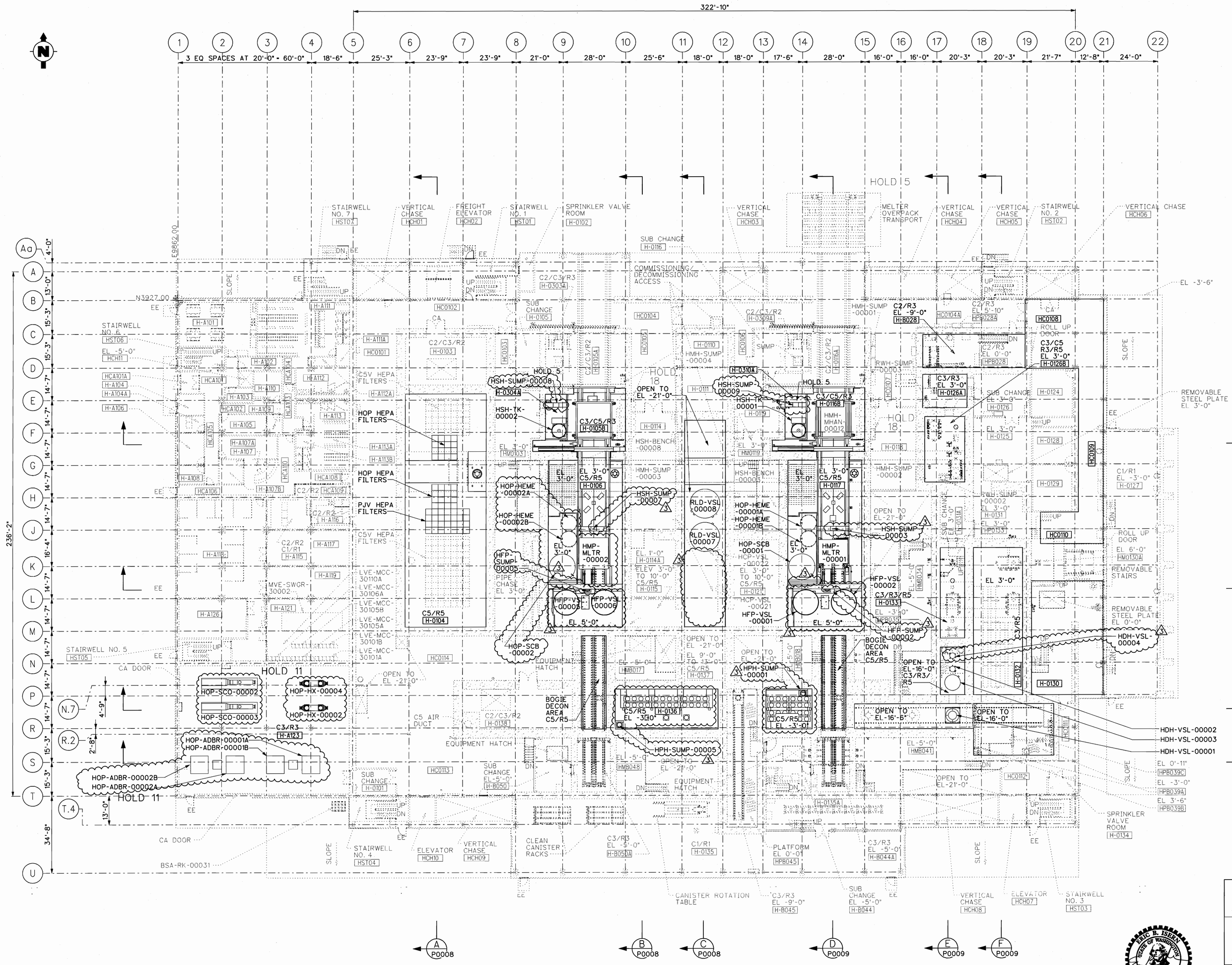

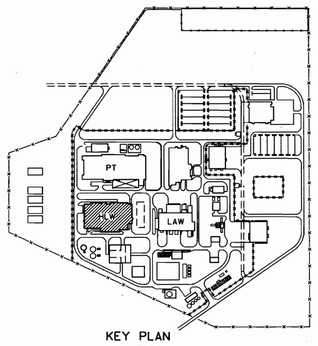

KEY PLAN (NTS)

NOTES:

1. ALL OPERATING AREAS ARE DESIGNATED C2/R2 UNLESS NOTED OTHERWISE. ANNEX ROOMS (B-T/1-5) ARE C1/R1 UNLESS NOTED OTHERWISE.
2. ALL SUB CHANGE ROOMS ARE DESIGNATED C2/C3/R2 UNLESS NOTED OTHERWISE.
3. DELETED
4. DELETED
5. CONTENTS OF THIS DOCUMENT ARE DANGEROUS WASTE PERMIT AFFECTING. (3)
6. ADDITIONAL WALLS FOR COMMODITY ITS SEPARATION WILL BE ADDED AS REQUIRED BASED ON FINAL COMMODITY ROUTING.
7. THE PORTIONS OF THIS DRAWING SHOWN IN PHANTOM ARE CONSIDERED NON-PERMIT AFFECTING AND ARE NOT SUBJECT TO THE REGULATORY REQUIREMENTS OF THE WAC CODE FOR THE DANGEROUS WASTE PERMIT TO THE EXTENT THAT THOSE PORTIONS DO NOT IMPACT DANGEROUS WASTE AREAS/OPERATIONS. (3)

HOLDS:

1. NOT USED.
2. NOT USED.
3. NOT USED.
4. NOT USED.
5. HOLD PENDING MH EQUIPMENT DEVELOPMENT AND SUMPS HSH-SUMP-00008 AND HSH-SUMP-00009 PLACEMENT.
6. NOT USED.
7. NOT USED.
8. NOT USED. (3)
9. NOT USED.
10. NOT USED.
11. HOLD PENDING MS EQUIPMENT DEVELOPMENT. (3)
12. NOT USED.
13. NOT USED.
14. NOT USED.
15. NOT USED. (3)
16. NOT USED.
17. NOT USED.
18. HOLD PENDING HYDRAULIC SYSTEM (HSH) DEVELOPMENT.
19. NOT USED.
20. NOT USED.
21. NOT USED.

LEGEND:

CA	CONTROLLED ACCESS
EE	EMERGENCY EXIT
H-0101	ROOMS, CELLS, CAVES (VAULTS) AND TUNNELS
HC0102	CORRIDORS & CONNECTING VESTIBULES
HM0103	MEZZANINES
HP0104	PLATFORMS
HCH01	CHASES
H-A101	ANNEX
HST01	STAIRWELL
	EQUIPMENT REMOVAL/PULL SPACE OR LAYDOWN AREA (3)
	CONCRETE
	CHECKERED PLATE
	GRATING SPAN
	CONSTRUCTION ACCESS

PLAN AT EL 0'-0"

(FROM EL -9'-0" TO EL 11'-0")

REV	DESCRIPTION	ORG	CHKD	RVWD	APVD	DATE
3	ISSUED FOR PERMITTING USE. RELOCATED SUMPS; RESIZED SUMPS, REMOVED HOLDS 9, 12 AND 15, REDESIGN OF CANISTER HANDLING RACKS. REMOVED HCP VESSELS 1 AND 2.	KAC	JM NML	WTM	DPF	08/04/04
2	ISSUED FOR PERMITTING USE. MOVED OFFGAS FROM EL. -21'-0", GHOSTED ROOM H-0103 AND PART OF FILTER CAVE, ADDED MELTER 2 EQUIPMENT, ADDED POUR TUNNELS; ADDED HOLDS 5, 9, 11, 12 AND 15, ADDED HDH-VSL-00004. ADDED (PERMIT) TO TITLE. ADDED CALLOUTS TO SUMPS.	KAC	NML	DG	DNP	10/02/03
1	REISSUED FOR PERMITTING USE DUE TO CLASSIFICATION CHANGE IN POUR TUNNEL AND FILTER CRANE MAINTENANCE AREAS.	NML	DG		JM SCF	12/11/02
0	ISSUED FOR PERMITTING USE.	NML	DG		MM SCF	10/30/02

REVISION HISTORY

ERIC B. ISERN — STATE OF WASHINGTON — 33449 — REGISTERED PROFESSIONAL ENGINEER — EXPIRES: 07/28/04

ISSUED BY PRP-WTP-PDC — ISSUE STAMP

PROJECT No.	24590	
SITE	HANFORD	
AREA	200E	
BUILDING No.		
	BY	DATE
ORIGINATOR	NATHANIEL LOVENGUTH	10/30/02
CHECKER	DAVID GOTT	10/30/02
APPROVER	MM/S C FOELBER	10/30/02
REVIEWER	N/A	

CONTENT APPLICABLE TO ALARA? [X] YES [ ] NO
ADR NO. N/A REV:

RIVER PROTECTION PROJECT
WASTE TREATMENT PLANT
2435 STEVENS CENTER PLACE
RICHLAND, WA 99352

CONTRACT No: DE-AC27-01RV14136

HLW VITRIFICATION BUILDING GENERAL ARRANGEMENT (PERMIT) PLAN AT EL 0'-0"

SCALE: 1/16"=1'-0" | 24590-HLW-P1-P01T-P0002 | REV 3

"E" SIZE - 44x34
COMPUTER GENERATED - MANUAL CHANGES NOT PERMITTED

PLEASE NOTE THAT SOURCE, SPECIAL NUCLEAR AND BYPRODUCT MATERIALS, AS DEFINED IN THE ATOMIC ENERGY ACT OF 1954 (AEA), ARE REGULATED AT THE U.S. DEPARTMENT OF ENERGY (DOE) FACILITIES EXCLUSIVELY BY DOE ACTING PURSUANT TO ITS AEA AUTHORITY. DOE ASSERTS, THAT PURSUANT TO THE AEA, IT HAS SOLE AND EXCLUSIVE RESPONSIBILITY AND AUTHORITY TO REGULATE SOURCE, SPECIAL NUCLEAR, AND BYPRODUCT MATERIAL AT DOE-OWNED NUCLEAR FACILITIES. INFORMATION CONTAINED HEREIN ON RADIONUCLIDES IS PROVIDED FOR PROCESS DESCRIPTION PURPOSES ONLY.

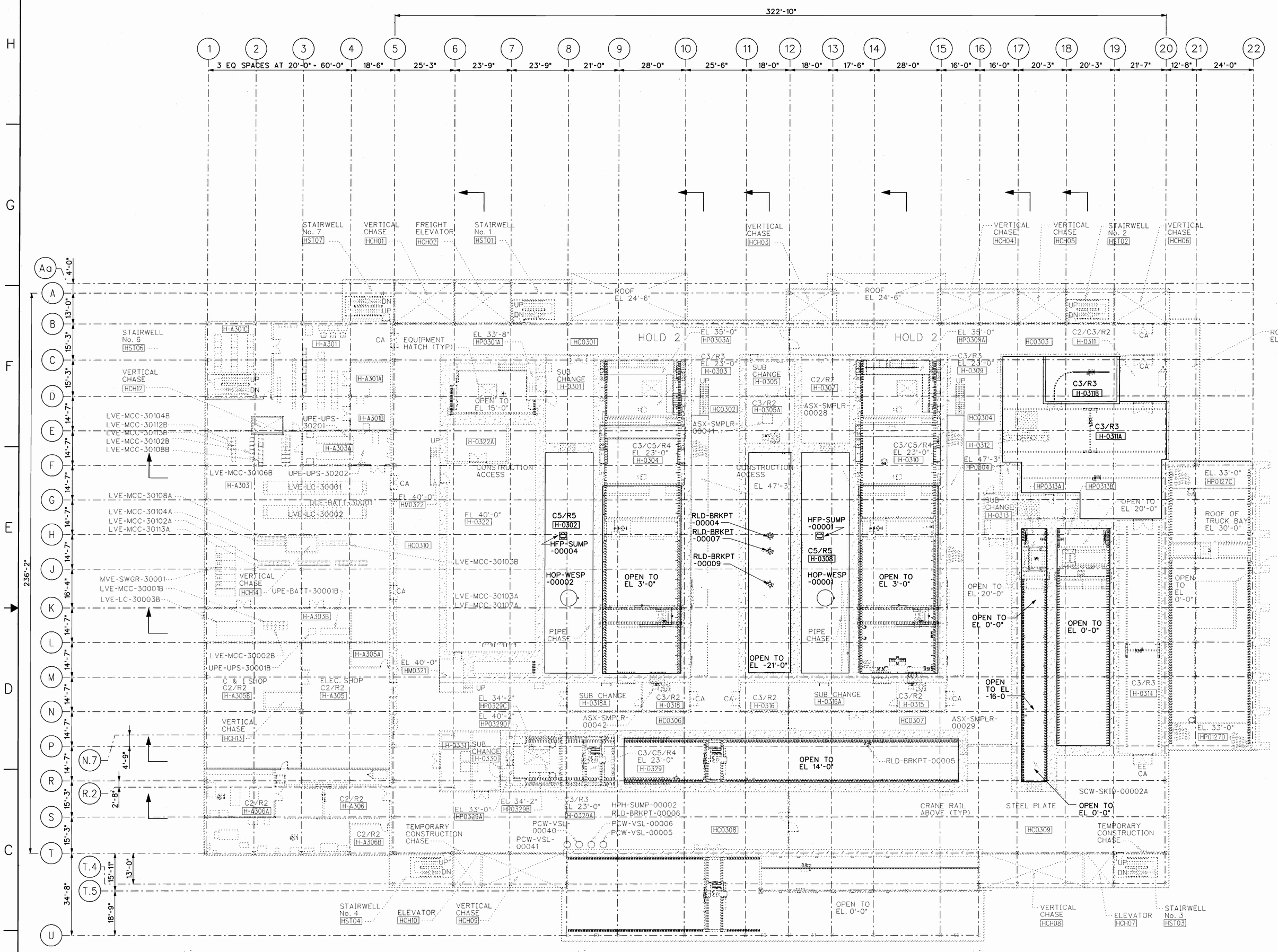

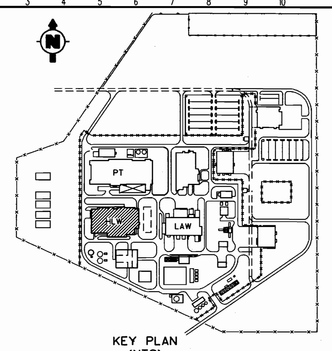

KEY PLAN (NTS)

NOTES:

1. ALL OPERATING AREAS ARE DESIGNATED C2/R2 UNLESS NOTED OTHERWISE. ANNEX ROOMS (B-T/1-5) ARE C1/R1 UNLESS NOTED OTHERWISE.
2. ALL SUB CHANGE ROOMS ARE DESIGNATED C2/C3/R2 UNLESS NOTED OTHERWISE.
3. DELETED.
4. DELETED.
5. ADDITIONAL WALLS FOR COMMODITY ITS SEPARATION WILL BE ADDED AS REQUIRED BASED ON FINAL COMMODITY ROUTING.
6. **CONTENTS OF THIS DOCUMENT ARE DANGEROUS WASTE PERMIT AFFECTING.**
7. **THE PORTIONS OF THIS DRAWING SHOWN IN PHANTOM ARE CONSIDERED NON-PERMIT AFFECTING AND ARE NOT SUBJECT TO THE REGULATORY REQUIREMENTS OF THE WAC CODE FOR THE DANGEROUS WASTE PERMIT TO THE EXTENT THAT THOSE PORTIONS DO NOT IMPACT DANGEROUS WASTE AREAS/OPERATIONS.**

HOLDS:

1. DELETED.
2. DELETED.
3. HOLD PENDING MS EQUIPMENT INPUT FOR ASX SAMPLERS.
4. NOT USED.
5. NOT USED.
6. NOT USED.
7. NOT USED.

LEGEND:

CA	CONTROLLED ACCESS
EE	EMERGENCY EXIT
H-0101	ROOMS, CELLS, CAVES (VAULTS) AND TUNNELS
HC0102	CORRIDORS & CONNECTING VESTIBULES
HM0103	MEZZANINES
HP0104	PLATFORMS
HCH01	CHASES
H-A101	ANNEX
HST01	STAIRWELL
	EQUIPMENT REMOVAL/PULL SPACE OR LAYDOWN AREA
	CONCRETE
	CHECKERED PLATE
	GRATING SPAN
	CONSTRUCTION ACCESS

PLEASE NOTE THAT SOURCE, SPECIAL NUCLEAR AND BYPRODUCT MATERIALS, AS DEFINED IN THE ATOMIC ENERGY ACT OF 1954 (AEA), ARE REGULATED AT THE U.S. DEPARTMENT OF ENERGY (DOE) FACILITIES EXCLUSIVELY BY DOE ACTING PURSUANT TO ITS AEA AUTHORITY. DOE ASSERTS, THAT PURSUANT TO THE AEA, IT HAS SOLE AND EXCLUSIVE RESPONSIBILITY AND AUTHORITY TO REGULATE SOURCE, SPECIAL NUCLEAR, AND BYPRODUCT MATERIAL AT DOE-OWNED NUCLEAR FACILITIES. INFORMATION CONTAINED HEREIN ON RADIONUCLIDES IS PROVIDED FOR PROCESS DESCRIPTION PURPOSES ONLY.

ERIC B. ISERN — STATE OF WASHINGTON — 33440 — REGISTERED PROFESSIONAL ENGINEER — EXPIRES: 07/28/05

REV	DESCRIPTION	ORG	CHKD	RVWD	APVD	DATE
0	ISSUED FOR PERMITTING USE.	KAC	JM	KJTM	DK	08/04/04

REVISION HISTORY

ISSUED BY RPP-WTP PDC — INIT — DATE — ISSUE STAMP

PROJECT No.	24590	
SITE	HANFORD	
AREA	200E	
BUILDING No.	30	
	BY	DATE
ORIGINATOR	Kimberly Cunningham	8-4-04
CHECKER	[illegible]	8-04-04
APPROVER	[illegible]	8-4-04
REVIEWER	Wade V. Myers	8/4/04

CONTENT APPLICABLE TO ALARA? [X] YES [ ] NO
ADR NO. N/A REV:

BECHTEL

RIVER PROTECTION PROJECT
WASTE TREATMENT PLANT
2435 STEVENS CENTER PLACE
RICHLAND, WA 99352

CONTRACT No: DE-AC27-01RV14136

HLW VITRIFICATION BUILDING GENERAL ARRANGEMENT (PERMIT) PLAN AT EL 37'-0"

SCALE: 1/16"=1'-0" | 24590-HLW-P1-P01T-P0004 | REV 0

'E' SIZE - 44x34
COMPUTER GENERATED - MANUAL CHANGES NOT PERMITTED

R10343983

08/04/2004 10:52:41 AM

FORM E_SDN.DGN 02/2003

c:\work\dms00784\24590\wp90\p0004\working permit.dgn

PLAN AT EL 37'-0"
(FROM EL 33'-0 TO EL 54'-0")

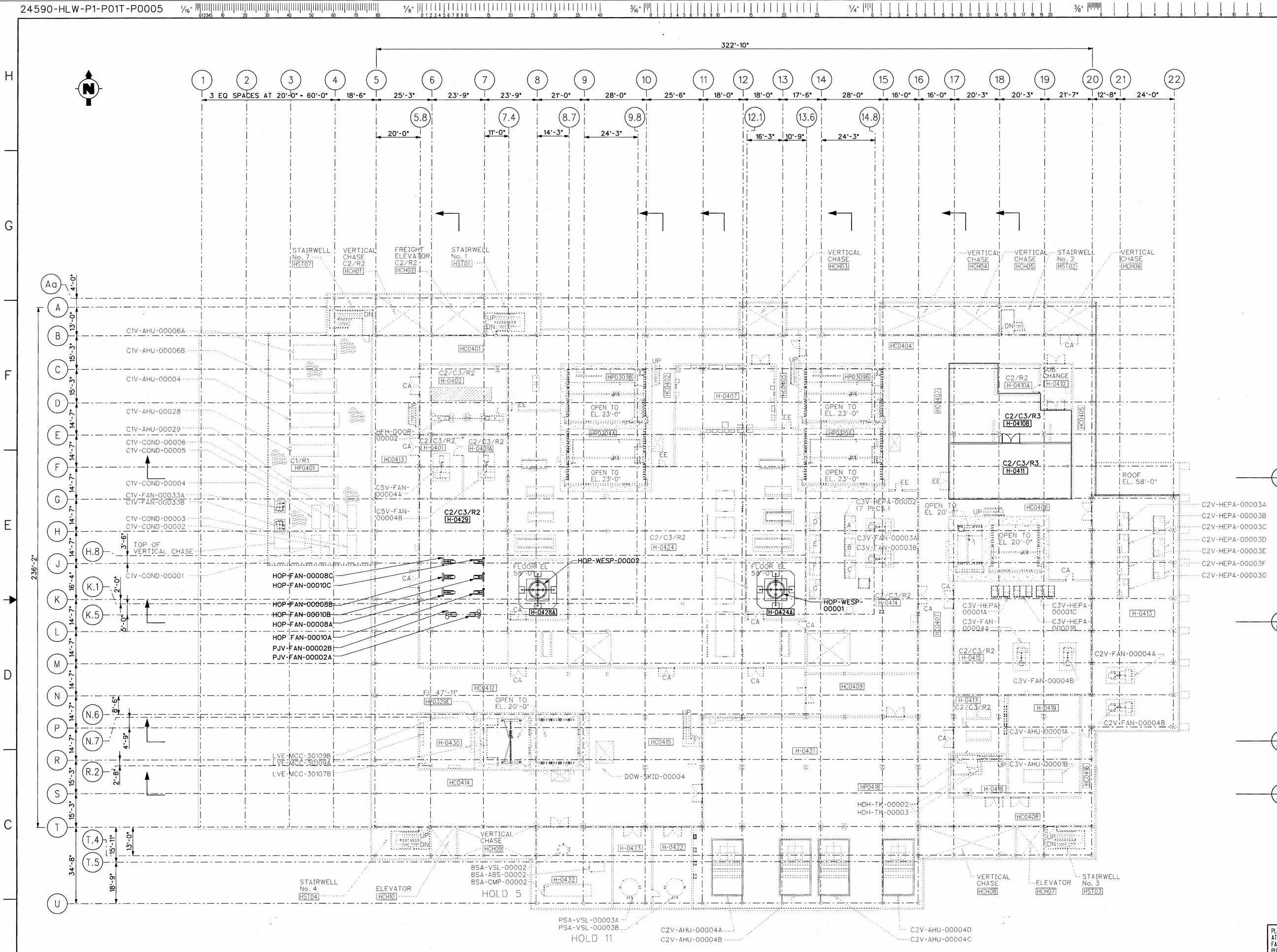

PLAN AT EL 58'-0"
(FROM EL 54'-0" TO EL 68'-0")

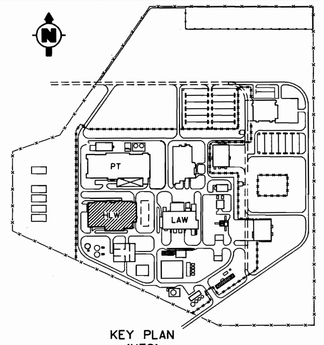

KEY PLAN
(NTS)

NOTES:

1. ALL OPERATING AREAS ARE DESIGNATED C2/R2 UNLESS NOTED OTHERWISE. ANNEX ROOMS (B-T/1-5) ARE C1/R1 UNLESS NOTED OTHERWISE.
2. ALL SUB CHANGE ROOMS ARE DESIGNATED C2/C3/R2 UNLESS NOTED OTHERWISE.
3. DELETED.
4. DELETED
5. ADDITIONAL WALLS FOR COMMODITY ITS SEPARATION WILL BE ADDED AS REQUIRED BASED ON FINAL COMMODITY ROUTING.
6. **CONTENTS OF THIS DOCUMENT ARE DANGEROUS WASTE PERMIT AFFECTING.**
7. **THE PORTIONS OF THIS DRAWING SHOWN IN PHANTOM ARE CONSIDERED NON-PERMIT AFFECTING AND ARE NOT SUBJECT TO THE REGULATORY REQUIREMENTS OF THE WAC CODE FOR THE DANGEROUS WASTE PERMIT TO THE EXTENT THAT THOSE PORTIONS DO NOT IMPACT DANGEROUS WASTE AREAS/OPERATIONS.**

HOLDS:

1. NOT USED.
2. NOT USED.
3. NOT USED.
4. NOT USED.
5. HOLD PENDING BSA EQUIPMENT DEVELOPMENT.
6. NOT USED.
7. NOT USED.
8. NOT USED.
9. NOT USED.
10. NOT USED.
11. HOLD PENDING MS ISA P&ID.

LEGEND:

CA	CONTROLLED ACCESS
EE	EMERGENCY EXIT
H-0101	ROOMS, CELLS, CAVES (VAULTS) AND TUNNELS
HC0102	CORRIDORS & CONNECTING VESTIBULES
HM0103	MEZZANINES
HP0104	PLATFORMS
HCH01	CHASES
H-A101	ANNEX
HST01	STAIRS
	EQUIPMENT REMOVAL/PULL SPACE OR LAYDOWN AREA
	CONCRETE
	CHECKERED PLATE
	GRATING SPAN
	CONSTRUCTION ACCESS

PLEASE NOTE THAT SOURCE, SPECIAL NUCLEAR AND BYPRODUCT MATERIALS, AS DEFINED IN THE ATOMIC ENERGY ACT OF 1954 (AEA), ARE REGULATED AT THE U.S. DEPARTMENT OF ENERGY (DOE) FACILITIES EXCLUSIVELY BY DOE ACTING PURSUANT TO ITS AEA AUTHORITY. DOE ASSERTS, THAT PURSUANT TO THE AEA, IT HAS SOLE AND EXCLUSIVE RESPONSIBILITY AND AUTHORITY TO REGULATE SOURCE, SPECIAL NUCLEAR, AND BYPRODUCT MATERIAL AT DOE-OWNED NUCLEAR FACILITIES. INFORMATION CONTAINED HEREIN ON RADIONUCLIDES IS PROVIDED FOR PROCESS DESCRIPTION PURPOSES ONLY.

ERIC B. ISELER — STATE OF WASHINGTON — 35449 — REGISTERED PROFESSIONAL ENGINEER — EXPIRES: 07/28/05

REV	DESCRIPTION	ORG	CHKD	RVWD	APVD	DATE
0	ISSUED FOR PERMITTING USE.	KAC	JMN	WTJH	VR	08/04/04

REVISION HISTORY

ISSUED BY RIVER PROTECTION PROJECT — JMN — 8/4/04 — ISSUE STAMP

PROJECT No.	24590	
SITE	HANFORD	
AREA	200E	
BUILDING No.	30	
	BY	DATE
ORIGINATOR	Kimberly Cunningham	8-4-04
CHECKER	Nathan Zumwalt	8-04-04
APPROVER	[illegible]	8-4-04
REVIEWER	Wade T. Myers	8/4/04

CONTENT APPLICABLE TO ALARA? [X] YES [ ] NO
ADR NO. N/A REV:

BECHTEL
RIVER PROTECTION PROJECT
WASTE TREATMENT PLANT
2435 STEVENS CENTER PLACE
RICHLAND, WA 99352

CONTRACT No: DE-AC27-01RV14136

HLW VITRIFICATION BUILDING GENERAL ARRANGEMENT (PERMIT) PLAN AT EL 58'-0"

SCALE: 1/16"=1'-0"

24590-HLW-P1-P01T-P0005

REV 0

FORM E_SDN.DGN 02/2003

'E' SIZE - 44x34
COMPUTER GENERATED - MANUAL CHANGES NOT PERMITTED

R10343984

08/04/2004 10:52:40 AM

c:\work\dms00784\24590hwp\p01tp0005\workingpermit.dgn

24590-HLW-P1-P01T-P0008

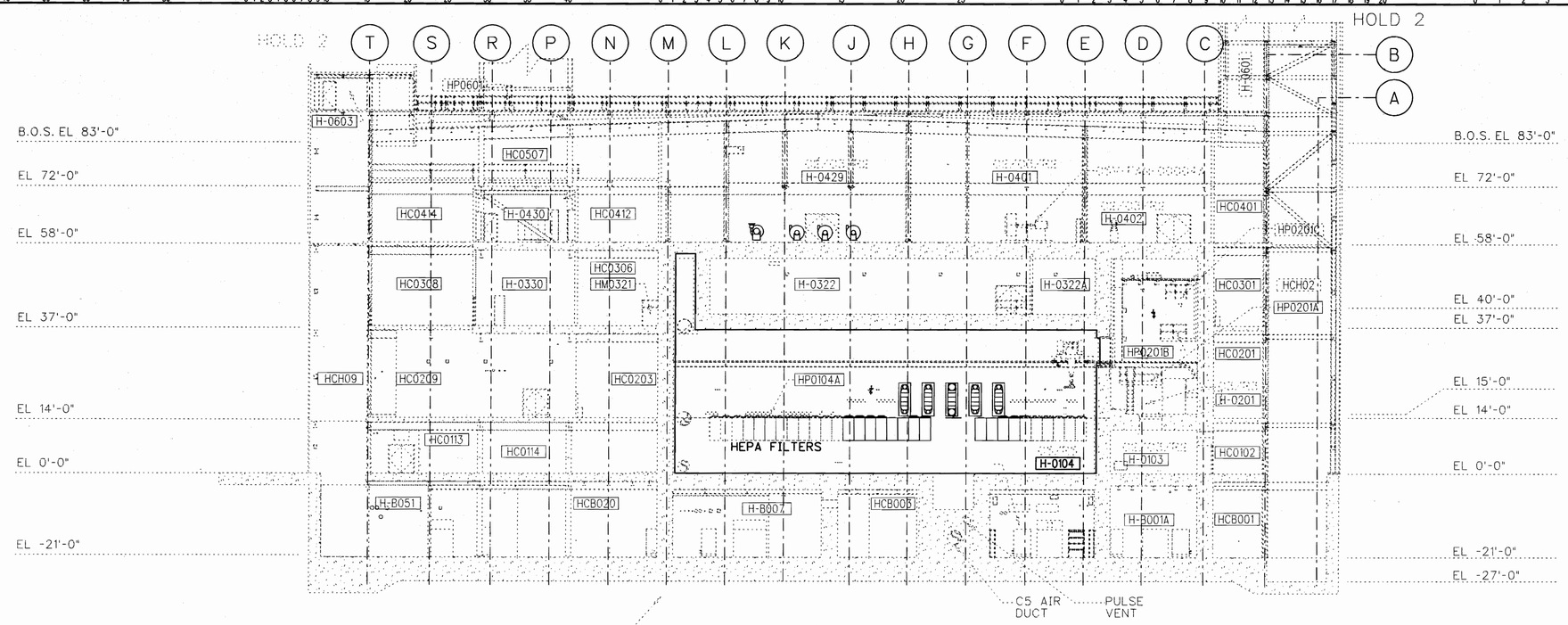

SECTION A
P0001 THRU P0007

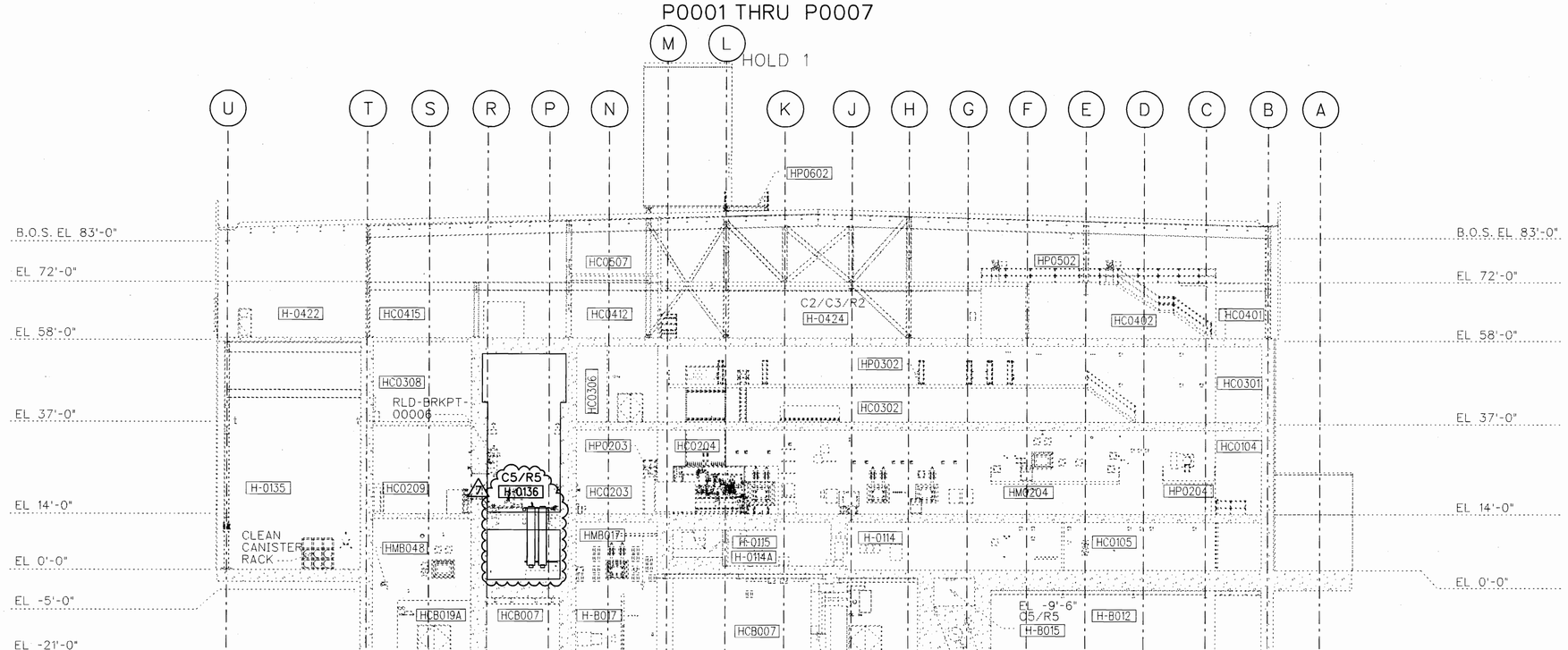

SECTION B
P0001 THRU P0007

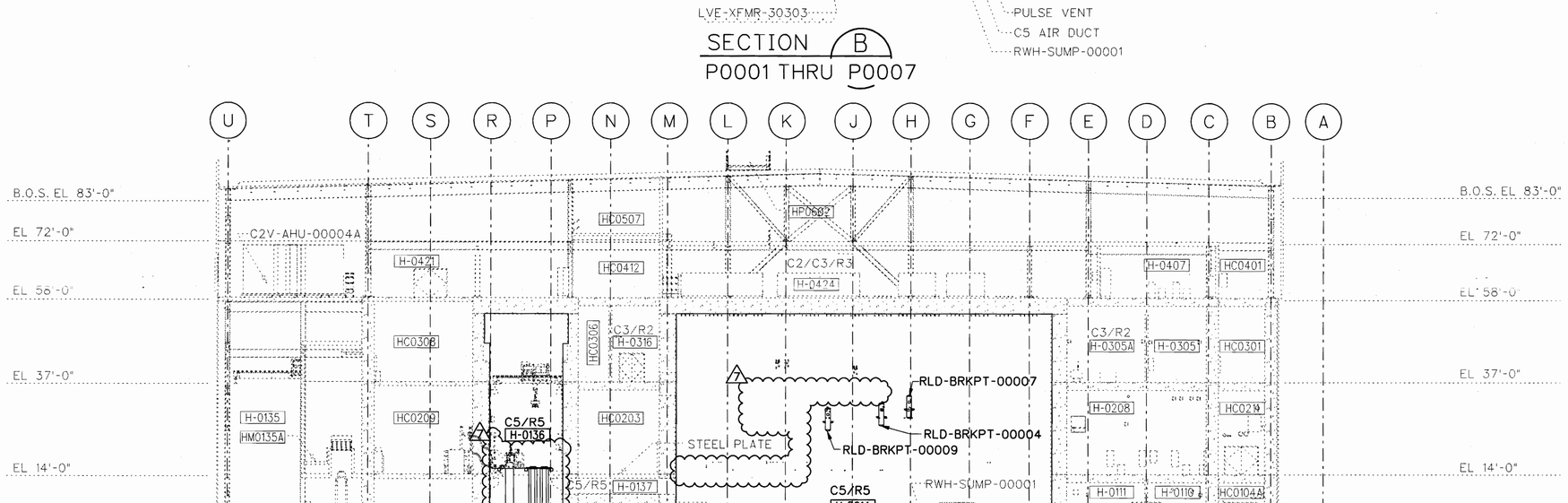

SECTION C
P0001 THRU P0007

HOLDS:

1. HOLD PENDING MH EQUIPMENT DATA.
2. HOLD FOR ARCHITECTURAL DESIGN OF ELEVATOR MACHINE ROOMS, AND RADIOLOGICAL ISSUES.
3. NOT USED
4. NOT USED.
5. NOT USED
6. NOT USED
7. NOT USED
8. NOT USED
9. NOT USED
10. DELETED.
11. DELETED.
12. HOLD PENDING MS EQUIPMENT INPUT FOR ASX SAMPLERS.

NOTES:

1. FOR GENERAL NOTES, SEE 24590-HLW-P1-P01T-P0001.
2. DELETED.
3. DELETED
4. NOT USED.
5. CONTENTS OF THIS DOCUMENT ARE DANGEROUS WASTE PERMIT AFFECTING.
6. THE PORTIONS OF THIS DRAWING SHOWN IN PHANTOM ARE CONSIDERED NON-PERMIT AFFECTING AND ARE NOT SUBJECT TO THE REGULATORY REQUIREMENTS OF THE WAC CODE FOR THE DANGEROUS WASTE PERMIT TO THE EXTENT THAT THOSE PORTIONS DO NOT IMPACT DANGEROUS WASTE AREAS/OPERATIONS.

PLEASE NOTE THAT SOURCE, SPECIAL NUCLEAR AND BYPRODUCT MATERIALS, AS DEFINED IN THE ATOMIC ENERGY ACT OF 1954 (AEA), ARE REGULATED AT THE U.S. DEPARTMENT OF ENERGY (DOE) FACILITIES EXCLUSIVELY BY DOE ACTING PURSUANT TO ITS AEA AUTHORITY. DOE ASSERTS, THAT PURSUANT TO THE AEA, IT HAS SOLE AND EXCLUSIVE RESPONSIBILITY AND AUTHORITY TO REGULATE SOURCE, SPECIAL NUCLEAR, AND BYPRODUCT MATERIALS AT DOE-OWNED NUCLEAR FACILITIES. IFORMATION CONTAINED HEREIN ON RADIONUCLIDES IS PROVIDED FOR PROCESS DESCRIPTION PURPOSES ONLY.

REV	DESCRIPTION	ORG	CHKD	RVWD	APVD	DATE
7	ISSUED FOR PERMITTING USE, REMOVED HOLD 10, REDESIGN CANISTER HANDLING RACKS. REMOVED HCP VESSELS 1 AND 2. REMOVED RLD BREAKPOTS 1 AND 3.	KAC	JM NML	WTM	MM	08/04/04
6	ISSUED FOR PERMITTING USE, MOVED UP HOLD 10, ADDED FILTER CAVE AREA, ADDED POUR TUNNEL, GHOSTED DRUM TRANSFER TUNNEL AND MOVED OFFGAS TO EL. 0'. ADDED (PERMIT) TO TITLE.	KAC	NML	DG	DNP	09/30/03
5	REISSUED FOR PERMITTING USE DUE TO ADDING CALL OUTS FOR FUTURE EQUIPMENT AND SUMPS.	KAC	NML	DG	TV	5/14/2003
4	REISSUED FOR PERMITTING USE DUE TO CHANGE IN POUR TUNNELS AND OFFGAS CLASSIFICATION.	NML	DG		MM SCF	12/11/02
3	ISSUED FOR PERMITTING USE.	NML	DG		MM SCF	10/30/02
2	REISSUED FOR PERMITTING USE DUE TO REMOVAL OF VESSEL RLD-VSL-00001.	TL	DG		MM SCF	9/08/02
1	REISSUED FOR PERMITTING USE DUE TO CHANGE IN DRAWING FORMAT.	TL	DG		MM SCF	6/10/02
0	ISSUED FOR PERMITTING USE.	TL	DG		MM SCF	4/08/02

REVISION HISTORY

ERIC B. ISSEN — STATE OF WASHINGTON — 33449 — REGISTERED PROFESSIONAL ENGINEER — EXPIRES: 07/28/05

ISSUED BY RPP-WTP PDC — ISSUE STAMP

PROJECT No.	24590	
SITE	HANFORD	
AREA	200E	
BUILDING No.		
	BY	DATE
ORIGINATOR	TIM LOGAN	4/08/02
CHECKER	DAVE GOTT	4/08/02
APPROVER	MARK MYATT/S C FOELBER	4/08/02
REVIEWER	N/A	

CONTENT APPLICABLE TO ALARA? [X] YES [ ] NO
ADR NO. N/A REV:

BECHTEL

RIVER PROTECTION PROJECT
WASTE TREATMENT PLANT
2435 STEVENS CENTER PLACE
RICHLAND, WA 99352

CONTRACT No: DE-AC27-01RV14136

HLW VITRIFICATION BUILDING GENERAL ARRANGEMENT (PERMIT) SECTIONS A-A, B-B & C-C

SCALE: 1/16"=1'-0"

24590-HLW-P1-P01T-P0008

REV 7

'E' SIZE - 44x34
COMPUTER GENERATED - MANUAL CHANGES NOT PERMITTED

R10343985

08/04/2004 10:52:38 AM

FORM E_SDN.DGN 02/2003

e:\work\dms00784\24590\hwp\p01tp0008 working rev 7.dgn

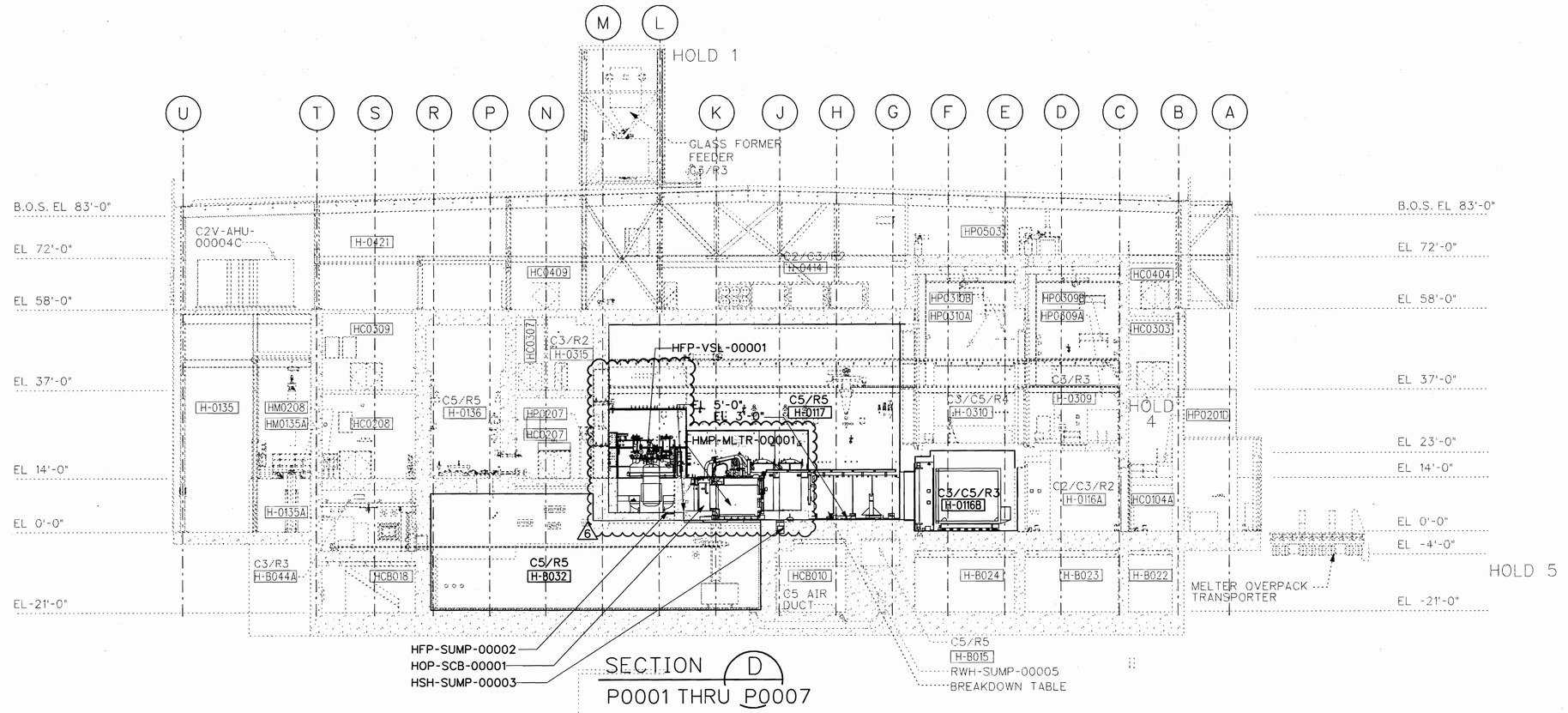

SECTION D
P0001 THRU P0007

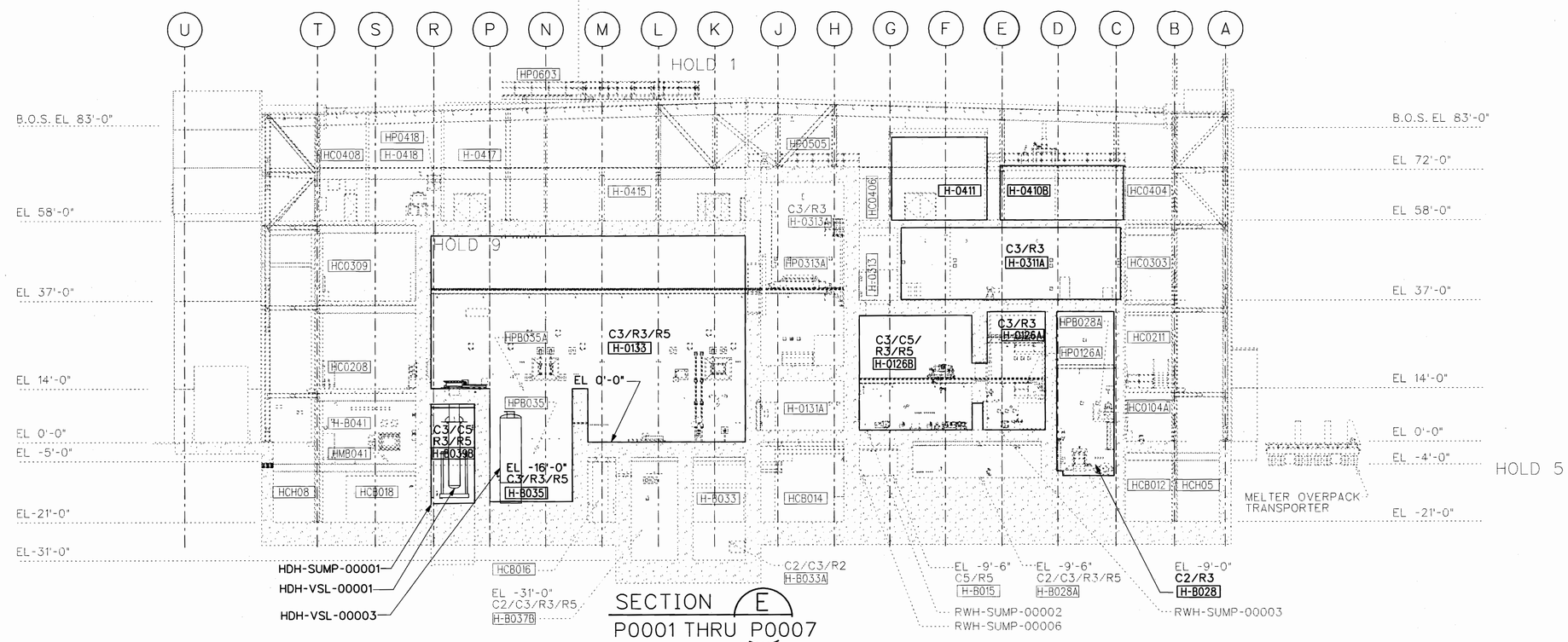

SECTION E
P0001 THRU P0007

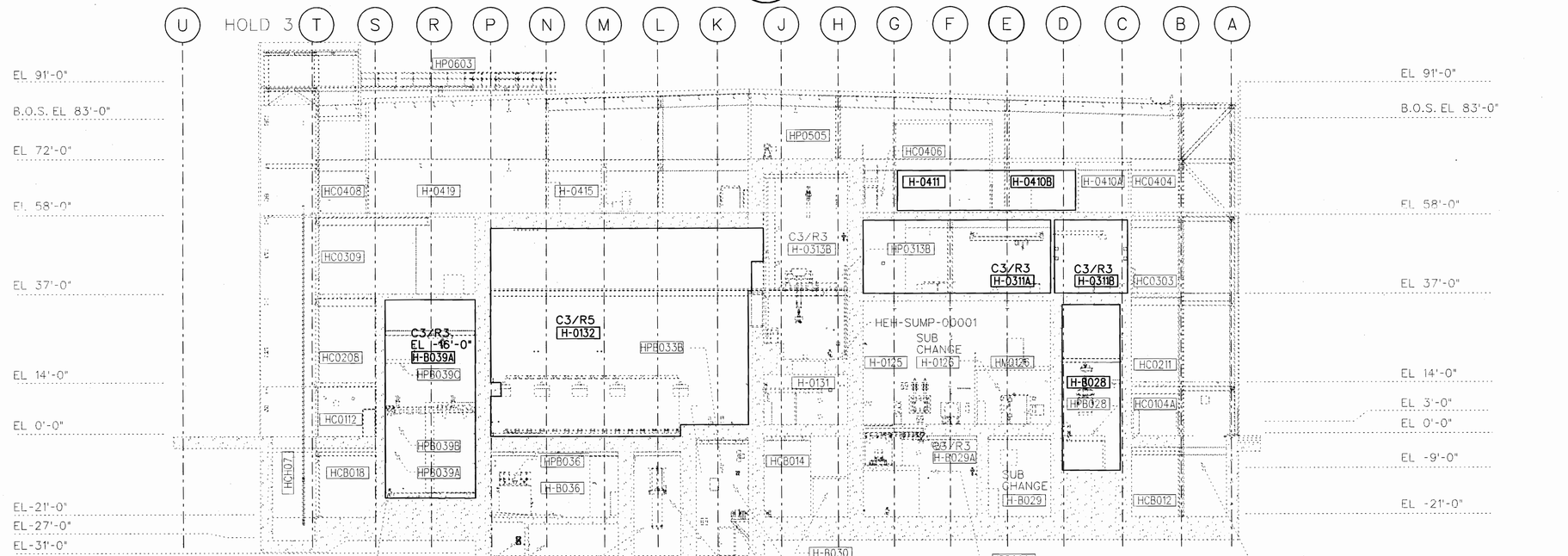

SECTION F
P0001 THRU P0007

HOLDS:

1. HOLD PENDING MH EQUIPMENT DATA AND E&NS AREA CLASSIFICATION INPUT.
2. NOT USED.
3. HOLD FOR ARCHITECTURAL DESIGN OF ELEVATOR MACHINE ROOM AND RADIOLOGICAL ISSUES.
4. HOLD PENDING MH PLATFORM DEVELOPMENT.
5. HOLD PENDING MS EQUIPMENT LAYOUT.
6. NOT USED.
7. NOT USED.
8. NOT USED
9. HOLD PENDING HDH EQUIPMENT LAYOUT.
10. NOT USED.
11. NOT USED

NOTES:

1. FOR GENERAL NOTES, SEE 24590-HLW-P1-P01T-P0001.
2. DELETED
3. DELETED
4. NOT USED.
5. CONTENTS OF THIS DRAWING ARE DANGEROUS WASTE PERMIT AFFECTING.
6. THE PORTIONS OF THIS DRAWING SHOWN IN PHANTOM ARE CONSIDERED NON-PERMIT AFFECTING AND ARE NOT SUBJECT TO THE REGULATORY REQUIREMENTS OF THE WAC CODE FOR THE DANGEROUS WASTE PERMIT TO THE EXTENT THAT THOSE PORTIONS DO NOT IMPACT DANGEROUS WASTE AREAS/ OPERATIONS.

PLEASE NOTE THAT SOURCE, SPECIAL NUCLEAR AND BYPRODUCT MATERIALS, AS DEFINED IN THE ATOMIC ENERGY ACT OF 1954 (AEA), ARE REGULATED AT THE U.S. DEPARTMENT OF ENERGY (DOE) FACILITIES EXCLUSIVELY BY DOE ACTING PURSUANT TO ITS AEA AUTHORITY. DOE ASSERTS, THAT PURSUANT TO THE AEA, IT HAS SOLE AND EXCLUSIVE RESPONSIBILITY AND AUTHORITY TO REGULATE SOURCE, SPECIAL NUCLEAR, AND BYPRODUCT MATERIALS AT DOE-OWNED NUCLEAR FACILITIES. IFORMATION CONTAINED HEREIN ON RADIONUCLIDES IS PROVIDED FOR PROCESS DESCRIPTION PURPOSES ONLY.

REV	DESCRIPTION	ORG	CHKD	RVWD	APVD	DATE
6	ISSUED FOR PERMITTING USE, REMOVED HOLD 2 & 12, REVISED MELTER CAVE.	KAC	NML	DG	DNP	08/04/04
5	ISSUED FOR PERMITTING USE, REVISED HOLD 12, ADDED POUR TUNNEL, ADDED PERMIT AFFECTING AREAS ON EL. 0' AND 14', ADDED (PERMIT) TO TITLE.	KAC	NML	DG	DNP	10/02/03
4	REISSUED FOR PERMITTING USE DUE TO ADDING CALL OUTS TO FUTURE EQUIPMENT AND SUMPS	KAC	NML	DG	TV	05/14/03
3	REISSUED FOR PERMITTING USE DUE TO CHANGE IN POUR TUNNEL CLASSIFICATION.	NML	DG		MM SCF	12/11/02
2	ISSUED FOR PERMITTING USE.	NML	DG		MM SCF	10/30/02
1	REISSUED FOR PERMITTING USE DUE TO CHANGE IN DRAWING FORMAT.	TL	DG		MM SCF	06/10/02
0	ISSUED FOR PERMITTING USE.	TL	DG		MM SCF	4/08/02

REVISION HISTORY

ERIC B. ISKAN — STATE OF WASHINGTON — 33449 — REGISTERED PROFESSIONAL ENGINEER — EXPIRES: 07/28/04

ISSUED BY / DATE / ISSUE STAMP

PROJECT No.	24590	
SITE	HANFORD	
AREA	200E	
BUILDING No.		
	BY	DATE
ORIGINATOR	TIM LOGAN	4/08/02
CHECKER	DAVE GOTT	4/08/02
APPROVER	MARK WYATT/S C FOELBER	4/08/02
REVIEWER	N/A	

CONTENT APPLICABLE TO ALARA? [X] YES [ ] NO
ADR NO. N/A REV:

BECHTEL

RIVER PROTECTION PROJECT
WASTE TREATMENT PLANT
2435 STEVENS CENTER PLACE
RICHLAND, WA 99352

CONTRACT No: DE-AC27-01RV14136

HLW VITRIFICATION BUILDING GENERAL ARRANGEMENT (PERMIT) SECTIONS D-D, E-E & F-F

SCALE: 1/16"=1'-0"

24590-HLW-P1-P01T-P0009

REV 6

"E" SIZE - 44x34
COMPUTER GENERATED - MANUAL CHANGES NOT PERMITTED

R10343966

08/03/2004 01:27:13 PM

FORM E_SDN.DGN 02/2003

e:\work\dms00784\24590\wp\p01tp0009 rev 6).dgn

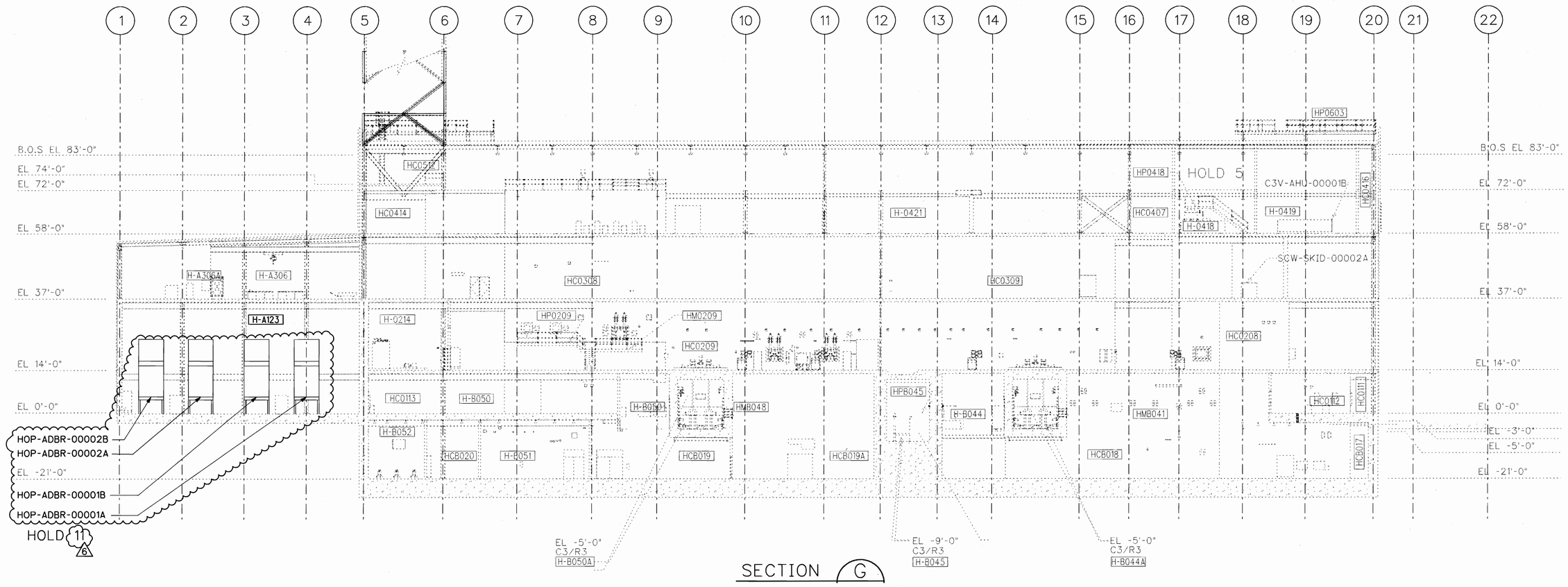

SECTION G
P0001 THRU P0007

HOLDS:

1. NOT USED
2. NOT USED
3. NOT USED
4. NOT USED
5. HOLD PENDING HDH EQUIPMENT LAYOUT.
6. NOT USED
7. NOT USED
8. NOT USED
9. HOLD PENDING MH DESIGN.
10. NOT USED
11. HOLD PENDING MS EQUIPMENT DEVELOPMENT.
12. NOT USED
13. NOT USED

NOTES:

1. FOR GENERAL NOTES, SEE 24590-HLW-P1-P01T-P0001.
2. DELETED.
3. DELETED.
4. DELETED.
5. CONTENTS OF THIS DOCUMENT ARE DANGEROUS WASTE PERMIT AFFECTING.
6. THE PORTIONS OF THIS DRAWING SHOWN IN PHANTOM ARE CONSIDERED NON-PERMIT AFFECTING AND ARE NOT SUBJECT TO THE REGULATORY REQUIREMENTS OF THE WAC CODE FOR THE DANGEROUS WASTE PERMIT TO THE EXTENT THAT THOSE PORTIONS DO NOT IMPACT DANGEROUS WASTE AREAS/OPERATIONS.

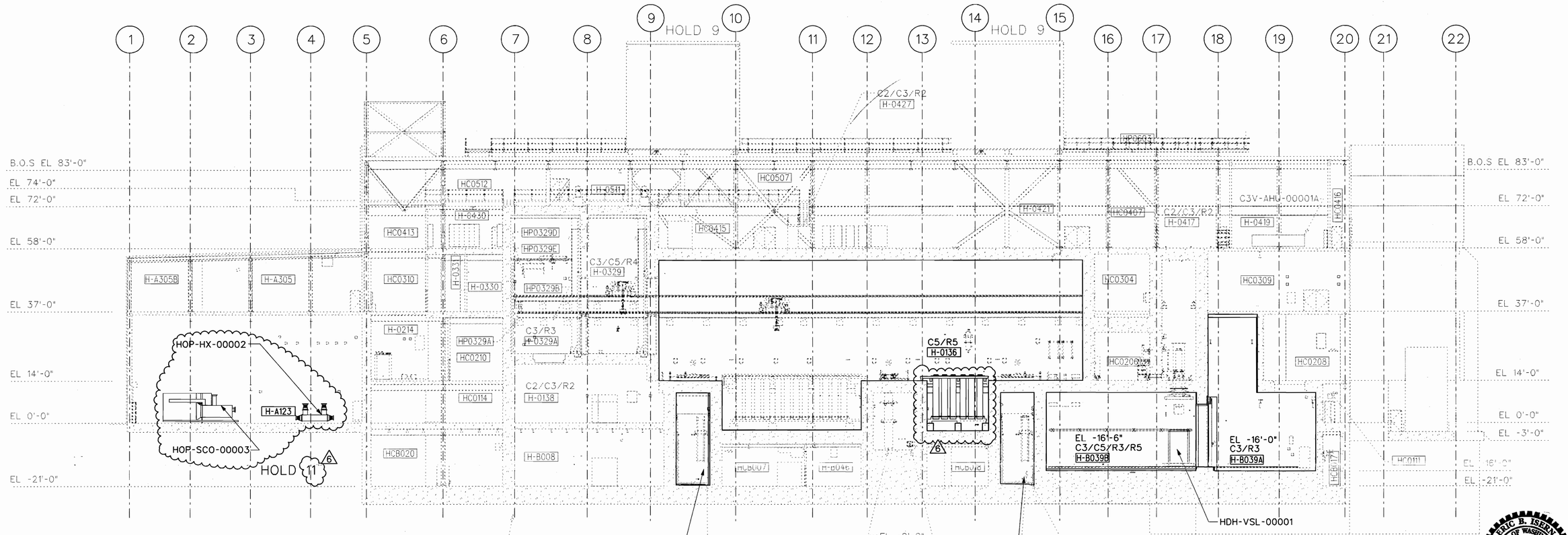

SECTION H
P0001 THRU P0007

PLEASE NOTE THAT SOURCE, SPECIAL NUCLEAR AND BYPRODUCT MATERIALS, AS DEFINED IN THE ATOMIC ENERGY ACT OF 1954 (AEA), ARE REGULATED ATTHE U.S. DEPARTMENT OF ENERGY (DOE) FACILITIES EXCLUSIVELY BY DOE ACTING PURSUANT TO ITS AEA AUTHORITY. DOE ASSERTS, THAT PURSUANT TO THE AEA, IT HAS SOLE AND EXCLUSIVE RESPONSIBILITY AND AUTHORITY TO REGULATE SOURCE, SPECIAL NUCLEAR, AND BYPRODUCT MATERIALS AT DOE-OWNED NUCLEAR FACILITIES. INFORMATION CONTAINED HEREIN ON RADIONUCLIDES IS PROVIDED FOR PROCESS DESCRIPTION PURPOSES ONLY.

REV	DESCRIPTION	ORG	CHKD	RVWD	APVD	DATE
6	ISSUED FOR PERMITTING USE.REDESIGN CANISTER HANDLING RACKS, REMOVED HOLD 10 & 12, REVISED HOLD 11.	KAC	JM NML	WTM	TPV	08/04/04
5	ISSUED FOR PERMITTING USE, MOVED OFFGAS EQUIPMENT TO EL. 0', REVISED HOLD 11, ADDED PERMIT AFFECTING AREAS ON EL. 0' AND 14', ADDED HOLD 10. ADDED (PERMIT) TO TITLE.	KAC	NML	DG	DNP	10/02/03
4	REISSUED FOR PERMITTING USE DUE TO ADDITION OF CALL OUTS TO FUTURE EQUIPMENT AND SUMPS.	KAC	NML	DG	TV	05/14/03
3	REISSUED FOR PERMITTING USE DUE TO CHANGE IN POUR TUNNEL CLASSIFICATION .	NML	DG		MM SCF	12/11/02
2	ISSUED FOR PERMITTING USE.	NML	DG		MM SCF	10/30/02
1	REISSUED FOR PERMITTING USE DUE TO CHANGE IN DRAWING FORMAT.	TL	DG		MM SCF	6/10/02
0	ISSUED FOR PERMITTING USE.	TL	DG		MM SCF	4/08/02

REVISION HISTORY

ERIC B. ISSEN — STATE OF WASHINGTON — 35449 — REGISTERED PROFESSIONAL ENGINEER — 08/04/04 — EXPIRES: 07/28/05

ISSUED BY DOE-RL/ORP FOR PERMIT ISSUE STATE

PROJECT No.	24590	
SITE	HANFORD	
AREA	200E	
BUILDING No.		
	BY	DATE
ORIGINATOR	TIM LOGAN	4/08/02
CHECKER	DAVE GOTT	4/08/02
APPROVER	MARK WYATT/S C FOELBER	4/08/02
REVIEWER	N/A	

CONTENT APPLICABLE TO ALARA? [X] YES [ ] NO
ADR NO. N/A REV:

BECHTEL

RIVER PROTECTION PROJECT
WASTE TREATMENT PLANT
2435 STEVENS CENTER PLACE
RICHLAND, WA 99352

CONTRACT No: DE-AC27-01RV14136

HLW VITRIFICATION BUILDING GENERAL ARRANGEMENT (PERMIT) SECTION G-G & H-H

SCALE: 1/16"=1'-0"

24590-HLW-P1-P01T-P0010

REV 6

'E' SIZE - 44x34
COMPUTER GENERATED - MANUAL CHANGES NOT PERMITTED

R10343987

08/03/2004 01:27:12 PM

c:\work\dms0078\24590\hnp\p01tp0010 (rev 6).dgn

FORM E_SDN.DGN 02/2003

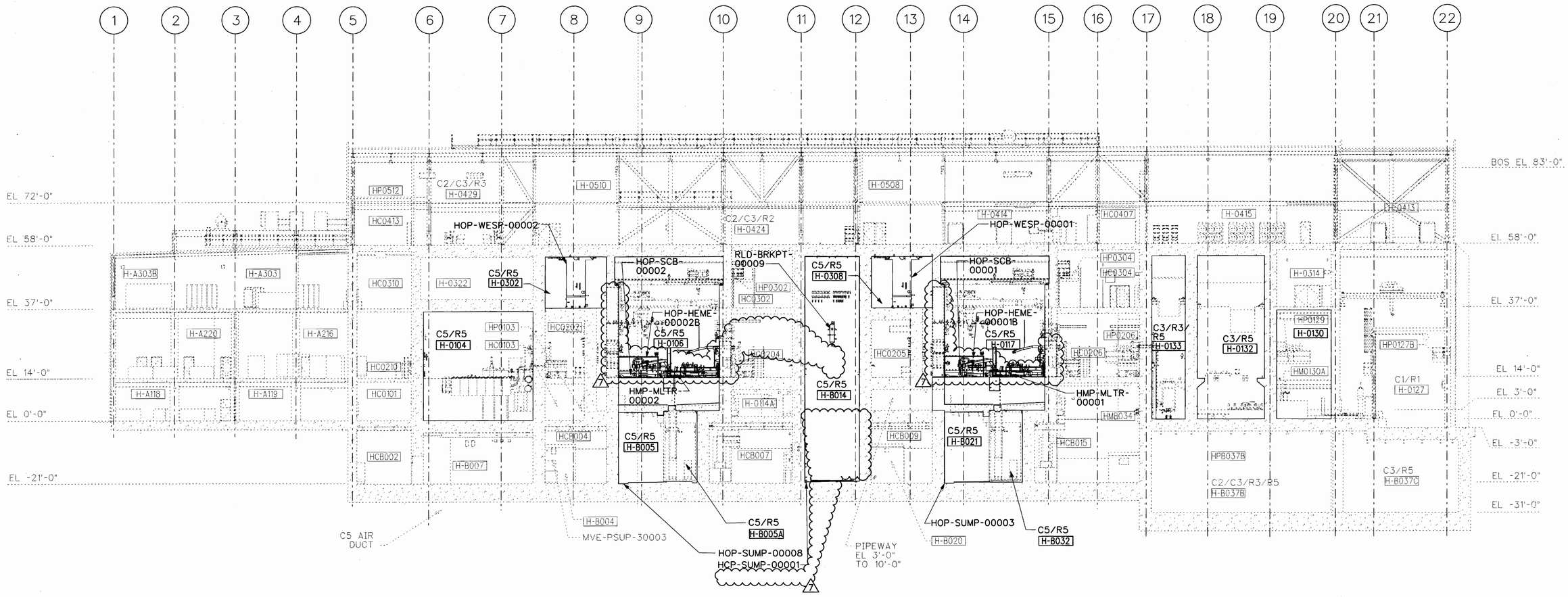

SECTION J
P0001 THRU P0007

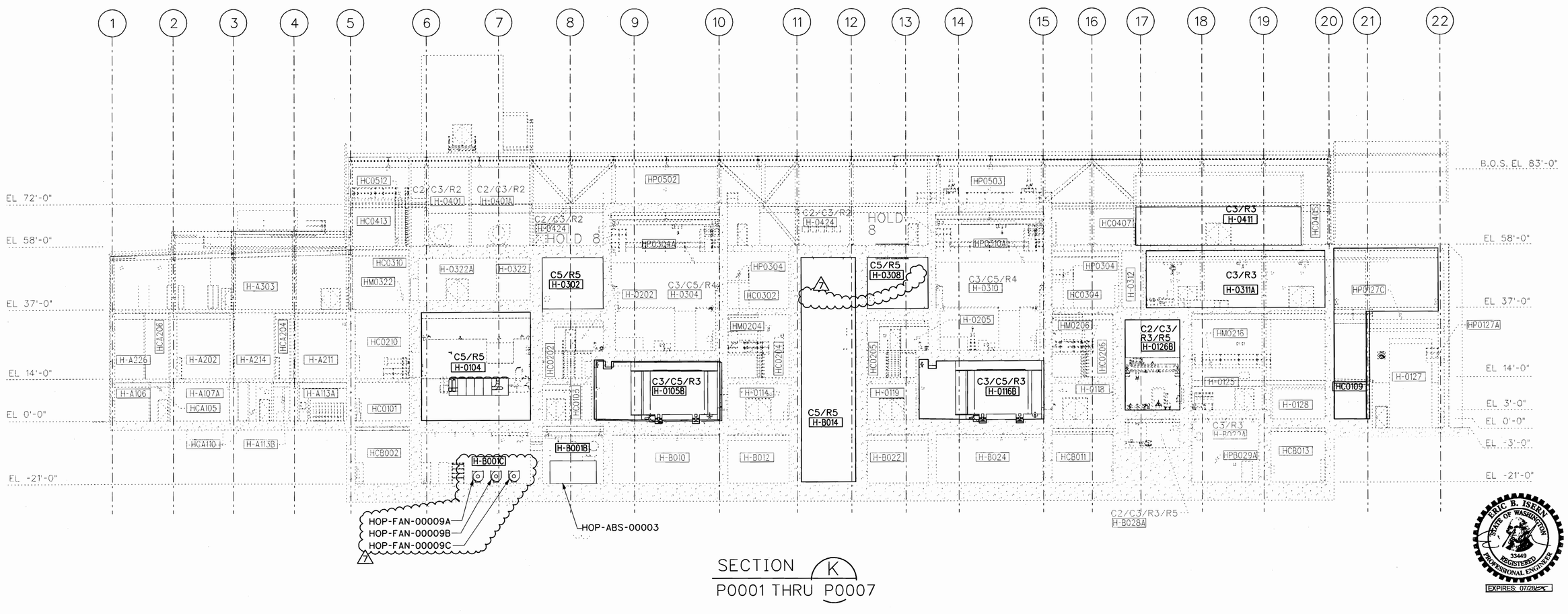

SECTION K
P0001 THRU P0007

HOLDS:

1. NOT USED.
2. NOT USED.
3. NOT USED.
4. NOT USED.
5. NOT USED.
6. NOT USED.
7. NOT USED
8. HOLD PENDING UPPER MAINTENANCE PLATFORM DEVELOPMENT.
9. NOT USED.
10. NOT USED.

NOTES:

1. FOR GENERAL NOTES, SEE 24590-HLW-P1-P01T-P0001.
2. DELETED.
3. DELETED.
4. DELETED.
5. CONTENTS OF THIS DOCUMENT ARE DANGEROUS WASTE PERMIT AFFECTING.
6. THE PORTIONS OF THIS DRAWING SHOWN IN PHANTOM ARE CONSIDERED NON-PERMIT AFFECTING AND ARE NOT SUBJECT TO THE REGULATORY REQUIREMENTS OF THE WAC CODE FOR THE DANGEROUS WASTE PERMIT TO THE EXTENT THAT THOSE PORTIONS DO NOT IMPACT DANGEROUS WASTE AREAS/OPERATIONS.

PLEASE NOTE THAT SOURCE, SPECIAL NUCLEAR AND BYPRODUCT MATERIALS, AS DEFINED IN THE ATOMIC ENERGY ACT OF 1954 (AEA), ARE REGULATED ATTHE U.S. DEPARTMENT OF ENERGY (DOE) FACILITIES EXCLUSIVELY BY DOE ACTING PURSUANT TO ITS AEA AUTHORITY. DOE ASSERTS, THAT PURSUANT TO THE AEA, IT HAS SOLE AND EXCLUSIVE RESPONSIBILITY AND AUTHORITY TO REGULATE SOURCE, SPECIAL NUCLEAR, AND BYPRODUCT MATERIALS AT DOE-OWNED NUCLEAR FACILITIES. INFORMATION CONTAINED HEREIN ON RADIONUCLIDES IS PROVIDED FOR PROCESS DESCRIPTION PURPOSES ONLY.

REV	DESCRIPTION	ORG	CHKD	RVWD	APVD	DATE
7	ISSUED FOR PERMITTING USE, REMOVED HOLDS 1 11 & 12. REMOVE HCP VESSEL 2. REMOVE RLD BREAKPOT 1.	KAC	NML	JM WTM	MM	08/04/04
6	ISSUED FOR PERMITTING USE, REVISED HOLD 11, MOVED OFF GAS TO EL. 0', ADDED PERMIT AFFECTING AREAS ON EL. 0' AND 14', ADDED (PERMIT) TO TITLE, ADDED HOLD 12.	KAC	NML	DG	DNP	10/02/03
5	REISSUED FOR PERMITTING USE DUE TO ADDITION OF CALL OUTS FOR FUTURE EQUIPMENT AND SUMPS.	KAC	NML	DG	TV	05/14/03
4	REISSUED FOR PERMITTING USE DUE TO CHANGE IN POUR TUNNEL AND OFFGAS CLASSIFICATIONS.	NML	DG		MM SCF	12/11/02
3	ISSUED FOR PERMITTING USE.	NML	DG		MM SCF	10/30/02
2	REISSUED FOR PERMITTING USE DUE TO REMOVAL OF VESSEL RLD-VSL-00001.	TL	DG		MM SCF	9/08/02
1	REISSUED FOR PERMITTING USE DUE TO CHANGE IN DRAWING FORMAT.	TL	DG		MM SCF	6/10/02
0	ISSUED FOR PERMITTING USE.	TL	DG		MM SCF	4/08/02

REVISION HISTORY

ERIC B. ISBEY — STATE OF WASHINGTON — 33449 — REGISTERED PROFESSIONAL ENGINEER — EXPIRES 07/28/04

ISSUED BY RPP-WTP PDC — ISSUE STAMP — DATE

PROJECT No.	24590	
SITE	HANFORD	
AREA	200E	
BUILDING No.		
	BY	DATE
ORIGINATOR	TIM LOGAN	4/08/02
CHECKER	DAVE GOTT	4/08/02
APPROVER	MARK MYATT/S C FOELBER	4/08/02
REVIEWER	N/A	

CONTENT APPLICABLE TO ALARA? [X] YES [ ] NO
ADR NO. N/A REV:

BECHTEL

RIVER PROTECTION PROJECT
WASTE TREATMENT PLANT
2435 STEVENS CENTER PLACE
RICHLAND, WA 99352

CONTRACT No: DE-AC27-01RV14136

HLW VITRIFICATION BUILDING GENERAL ARRANGEMENT (PERMIT) SECTION J-J & K-K

SCALE: 1/16"=1'-0"

24590-HLW-P1-P01T-P0011

REV 7

'E' SIZE - 44x34
COMPUTER GENERATED - MANUAL CHANGES NOT PERMITTED

R10343988

08/03/2004 01:27:10 PM

FORM E_SDN.DGN 02/2003

c:\work\dms00784\24590hlwp\p01tp001\working (rev 7).dgn

Attachment 51 – Appendix 10.5
High Level Waste Building
Civil, Structural, and Architectural Criteria and Typical Design Details

Where information regarding treatment, management, and disposal of the radioactive source, byproduct material, and/or special nuclear components of mixed waste (as defined by the Atomic Energy Act of 1954, as amended) has been incorporated into this permit, it is not incorporated for the purpose of regulating the radiation hazards of such components under the authority of this permit and chapter 70.105 RCW. In the event of any conflict between Permit Condition III.10.A. and any statement relating to the regulation of source, special nuclear, and byproduct material contained in portions of the permit application that are incorporated into this permit, Permit Condition III.10.A. will prevail.

Additional appendices will be added to this appendix as new information is incorporated into this permit.

Drawings and Documents

Attachment 51 – Appendix 10.5

High Level Waste Building
Civil, Structural, and Architectural Criteria and Typical Design Details

The following drawings have been incorporated into Appendix 10.5 and can be viewed at the Ecology Richland Office. **New drawings are in bold lettering**.

Drawing/Documents	**Description**
24590-HLW-PER-M-02-001, Rev 3	HLW Facility Sump Data
RESERVED	RESERVED

R10343187

Document title: **HLW Facility Sump Data**

Contract number: DE-AC27-01RV14136

Department: Mechanical Systems

Author(s): J Medina

ISSUED BY
RPP-WTP PDC
8/3/04
INIT DATE

Principal author signature:

Document number: 24590-HLW-PER-M-02-001, Rev 3

Checked by: Y May

Checker signature:

Date of issue: 3 August 2004

Issue status: Issued for Permitting Use

Approved by: J Schneider

Approver's position: HLW Area Project Engineering Manager

Approver signature:

ERIC B. ISERN
STATE OF WASHINGTON
33449
REGISTERED
PROFESSIONAL ENGINEER
8/3/04
EXPIRES: 07/28/05

This bound document contains a total of 14 sheets

River Protection Project
Waste Treatment Plant
2435 Stevens Center Place
Richland, WA 99352
United States of America
Tel: 509 371 2000

Notice

Please note that source, special nuclear, and byproduct materials, as defined in the Atomic Energy Act of 1954 (AEA), are regulated at the US Department of Energy (DOE) facilities exclusively by DOE acting pursuant to its AEA authority. DOE asserts, that pursuant to the AEA, it has sole and exclusive responsibility and authority to regulate source, special nuclear, and byproduct materials at DOE-owned nuclear facilities. Information contained herein on radionuclides is provided for process description purposes only.

History Sheet

Rev	Date	Reason for revision	Revised by
0	18 December 2002	Issued for permitting use	S Thakkar
1	14 May 2003	Major revision, issued for permitting use	J Medina
2	10 October 2003	Major revision, issued for permitting use	J Medina
3	3 August 2004	Issued for permitting use	J Medina

Acronyms and Abbreviations

AEA	*Atomic Energy Act*
DOE	US Department of Energy
HCP	HLW concentrate receipt process system
HDH	HLW canister decontamination handling system
HEME	high efficiency mist eliminator
HFP	HLW melter feed process system
HLW	high-level waste
HMH	HLW melter handling system
HMP	HLW melter process system
HOP	melter offgas treatment process system
HPH	HLW canister pour handling system
HSH	HLW melter cave support handling system
moly	molybdenum
PT	pretreatment facility
PWD	plant wash and disposal system
RLD	radioactive liquid waste disposal system
SBS	submerged bed scrubber
US	United States
WAC	*Washington Administrative Code*
WESP	wet electrostatic precipitator

Contents

Notice ii
History Sheet iii
Acronyms and Abbreviations iv
1 Introduction 1
2 Applicable Documents 1
3 Description 1
3.1 Sumps Located at Elevation −21 Ft 1
3.2 Sumps Located at Elevation 0 Ft 4
3.3 Sumps Located at Elevation 14 Ft 6
3.4 Sumps Located at Elevation 37 Ft 6
3.5 Sumps Located at Elevation 58 Ft 7

Tables

Table 1 HLW Sumps 8
Table 2 HLW Floor Drains 9

1 Introduction

The *Washington Administrative Code*, WAC 173-303, requires that secondary containment be designed and operated to contain 100 % of the capacity of the largest tank within its boundary for tank systems containing dangerous waste. This document provides a brief description of the secondary containment sumps, regulated under the Dangerous Waste Permit, in the high-level waste (HLW) vitrification facility. These sumps are listed in Table 1. Floor drains are considered extensions of secondary containment and are listed in Table 2. This document addresses all regulated sumps in the HLW vitrification facility.

2 Applicable Documents

WAC 173-303. *Dangerous Waste Regulations. Washington Administrative Code.*

3 Description

3.1 Sumps Located at Elevation −21 Ft

The sumps shown on the *HLW Vitrification Building General Arrangement (Permit) Plan at El. −21'- 0"*, 24590-HLW-P1-P01T-P0001, Rev 6, are listed in Table 1, numbers 1 through 7. These sumps are equipped with radar-type level detectors and have either ejectors or pumps, as detailed in the following paragraphs. If the sumps are equipped with ejectors, they are either 100 % capacity ejectors or redundant ejectors. 100% capacity ejectors have the ability to remove spills, leaks, or accumulated liquid from the secondary containment system within 24 hours. The sumps, detailed below are dry sumps lined with 6 % molybdenum (6 moly) stainless steel liner material.

3.1.1 Sumps Located in Wet Process Cell

The wet process cell (H-B014) floor area is divided into two sections by the drum transfer tunnel (H-B015); they are the north and south sections.

Two sumps are located in the wet process cell (H-B014):

HCP-SUMP-00001	wet process cell (south)
RLD-SUMP-00001	wet process cell (north)

The following vessels are located in the south section of the wet process cell (H-B014):

RLD-VSL-00007	acidic waste vessel
RLD-VSL-00008	plant wash and drains vessel

If the capacity of the acidic waste vessel (RLD-VSL-00007) is exceeded, the excess overflows to the plant wash and drains vessel (RLD-VSL-00008). Any leakages from these vessels flow into sump HCP-SUMP-00001, which is located in the same cell. This sump is equipped with two 100 % capacity ejectors. During normal operation, one of the ejectors for sump HCP-SUMP-00001 transfers the waste to the plant wash and drains vessel (RLD-VSL-00008). If the capacity of the plant wash and drains vessel (RLD-VSL-00008) is exceeded or failure of the vessel occurs, the excess flows into sump HCP-SUMP-00001. The redundant ejector transfers the waste to breakpot RLD-BRKPT-00004. From this breakpot, the waste flows by gravity to the pretreatment (PT) facility. This sump is located at the −21 ft elevation.

The following vessel is located in the north section of the wet process cell (H-B014):

RLD-VSL-00002	offgas drains collection vessel

If the capacity of the offgas drains collection vessel (RLD-VSL-00002) is exceeded, the excess overflows to sump RLD-SUMP-00001, which is located in the same section of the cell. Two 100 % capacity ejectors are provided to transfer the waste from the sump to the plant wash and drains vessel (RLD-VSL-00008). This sump is located at the −21 ft elevation.

3.1.2 Sumps Located in Canister Decon Area

The canister decon area is separated into three rooms: the canister rinse tunnel (H-B039B), the canister rinse-bogie maintenance room (H-B039A), and the canister decon cave (H-B035).

Three sumps are located in the canister decon area:

HDH-SUMP-00001

HDH-SUMP-00002

HDH-SUMP-00003

The following vessels are located in this area:

HDH-VSL-00001	rinse tunnel canister rinse vessel
HDH-VSL-00002	canister decon vessel 1
HDH-VSL-00003	waste neutralization vessel
HDH-VSL-00004	canister decon vessel 2

The rinse tunnel canister rinse vessel (HDH-VSL-00001) is located in the canister rinse tunnel (H-B039B) at the −16.5 ft elevation. The waste from this vessel is pumped to the waste neutralization vessel (HDH-VSL-00003). Any leakages from the rinse tunnel canister rinse vessel (HDH-VSL-00001) flow into sump HDH-SUMP-00001 located in this cell. This sump is equipped with one 100 % capacity ejector that transfers the waste to the plant wash and drains vessel (RLD-VSL-00008). This sump is located at the −16.5 ft elevation.

Sump HDH-SUMP-00002 is located in the canister rinse-bogie maintenance room (H-B039A). Any leakage in this tunnel flows into this sump. One 100 % capacity pump located at the sump transfers the

waste to the plant wash and drains vessel (RLD-VSL-00008). From the plant wash and drains vessel (RLD-VSL-00008), the waste is transferred to breakpot RLD-BRKPT-00007 or RLD-BRKPT-00009. From this breakpot, the waste flows by gravity to the PT facility. This sump is located at the −16 ft elevation.

Any leakages from the canister decon vessel 1 (HDH-VSL-00002), canister decon vessel 2 (HDH-VSL-00004), and waste neutralization vessel (HDH-VSL-00003) flow into sump HDH-SUMP-00003 in the canister decon cave (H-B035). Canister decon vessels 1 and 2 (HDH-VSL-00002 and HDH-VSL-00004) pass through the floor at the 14 ft elevation. The tops of these vessels protrude approximately 4 ft above the floor. They are supported at the 14 ft elevation. From the floor of the 14 ft elevation, the vessels extend down approximately 14 ft. This room is open to the −16 ft elevation. The overflow from these vessels is transferred to the waste neutralization vessel (HDH-VSL-00003). If the capacity of the waste neutralization vessel (HDH-VSL-00003) is exceeded, the excess overflows into sump HDH-SUMP-00003, which is located in the same cell. This sump is equipped with one 100 % capacity ejector that transfers the waste to the plant wash and drains vessel (RLD-VSL-00008). This sump is located at the −16 ft elevation.

3.1.3 Sumps Located in the SBS Drain Collection Cell No 1

One sump is located in this cell (H-B021):

HOP-SUMP-00003

The following vessel is located in this cell:

HOP-VSL-00903 SBS condensate receiver vessel

Any leakage from the SBS condensate receiver vessel (HOP-VSL-00903) flows into sump HOP-SUMP-00003. This sump also receives waste, through the gravity floor drain from the secondary containment for the melter 1 submerged bed scrubber (SBS) (HOP-SCB-00001), and melter 1 high efficiency mist eliminators (HEMEs) (HOP-HEME-00001A/B). The SBS and HEMEs for melter 1 are located in the west section of melter cave no 1 (H-0117), which is located directly above the SBS drains collection cell no 1 (H-B021). Two 100 % capacity ejectors transfer the waste from sump HOP-SUMP-00003 to the plant wash and drains vessel (RLD-VSL-00008). This sump is located at the −21 ft elevation.

3.1.4 Sumps Located in the SBS Drain Collection Cell No 2

One sump is located in this cell (H-B005):

HOP-SUMP-00008

The following vessel is located in this cell:

HOP-VSL-00904 melter 2 SBS condensate receiver vessel

Any leakage from the melter 2 SBS condensate receiver vessel (HOP-VSL-00904) flows into sump HOP-SUMP-00008. This sump also receives waste, through the gravity floor drain, from the secondary containment for the melter 2 submerged bed scrubber (SBS) (HOP-SCB-00002), and melter 2 high efficiency mist eliminators (HEMEs) (HOP-HEME-00002A/B). The SBS and HEMEs for melter 2 are

located in the west section of melter cave no 2 (H-0106), which is located directly above the SBS drain collection cell no 2 (H-B005). Two 100 % capacity ejectors transfer the waste from sump HOP-SUMP-00008 to the plant wash and drains vessel (RLD-VSL-00008). This sump is located at the −21 ft elevation.

3.2 Sumps Located at Elevation 0 Ft

The sumps shown on the *HLW Vitrification Building General Arrangement (Permit) Plan at El. 0' 0"*, 24590-HLW-P1-P01T-P0002, Rev 3, are listed in Table 1, numbers 8 through 15. These sumps are equipped with either radar-type or bubbler-type level detectors and have either ejectors or pumps as detailed in the following paragraphs. If the sumps are equipped with ejectors, they are either 100 % capacity ejectors or redundant ejectors. 100% capacity ejectors have the ability to remove spills, leaks, or accumulated liquid from the secondary containment system within 24 hours. The sumps detailed below are dry sumps lined with 6 moly stainless steel liner material.

3.2.1 Sumps Located in the Melter Cave No 1 Area

The melter cave no 1 area consists of three rooms: melter cave no 1 (H-0117), melter no 1 equipment decontamination pit (H-0310A), and melter cave no 1 - C3/C5 airlock (H-0116B).

Three sumps are located in the melter cave no 1 area:

HSH-SUMP-00003

HFP-SUMP-00002

HSH-SUMP-00008

Vessels and equipment located in the melter cave no 1 (H-0117) and melter no 1 equipment decontamination pit (H-0310A) include the following:

HMP-MLTR-00001	HLW melter 1
HFP-VSL-00001	melter 1 feed preparation vessel
HFP-VSL-00002	melter 1 feed vessel
HOP-SCB-00001	melter 1 submerged bed scrubber (SBS)
HOP-HEME-00001A	melter 1 high efficiency mist eliminator (HEME)
HOP-HEME-00001B	melter 1 high efficiency mist eliminator (HEME)
HSH-TK-00001	decontamination tank melter cave 1

Sump HSH-SUMP-00003 is located in the central section of melter cave no 1 (H-0117). A 100% capacity ejector ejector in the sump transfers the waste to the plant wash and drains vessel (RLD-VSL-00008). From the plant wash and drains vessel (RLD-VSL-00008), waste is transferred to breakpot RLD-BRKPT-00004. The waste is then transferred to the PT facility by gravity flow into the ultimate overflow vessel (PWD-VSL-00033). This sump is located at the 3 ft elevation.

If the capacity of the melter 1 feed preparation vessel (HFP-VSL-00001) and melter 1 feed vessel (HFP-VSL-00002) is exceeded, the excess overflows to sump HFP-SUMP-00002. Additionally, any leakages from these vessels can flow into the same sump, which is located in the south section of the cell (H-0117). A 100% capacity ejector in the sump transfers waste to the plant wash and drains vessel (RLD-VSL-00008). This sump is located at the 5 ft elevation.

If the capacity of the decontamination tank melter cave 1 (HSH-TK-00001) is exceeded, the excess overflows into sump HSH-SUMP-00008 located in the melter no 1 equipment decontamination pit (H-0310A). A 100% capacity ejector in the sump transfers the waste to the plant wash and drains vessel (RLD-VSL-00008). This sump is located at the 0 ft elevation.

3.2.2 Sumps Located in the Melter Cave No 2 Area

The melter cave no 2 area consists of three rooms: the melter cave no 2 (H-0106), melter no 2 equipment decontamination pit (H-0304A), and melter cave no 2 - C3/C5 airlock (H-0105B).

Three sumps are located in the melter cave no 2 area:

HSH-SUMP-00007

HFP-SUMP-00005

HSH-SUMP-00009

Vessels and equipment located in the melter cave no 2 (H-0106) and melter no 2 equipment decontamination pit (H-0304A) include the following:

HMP-MLTR-00002	HLW melter 2
HFP-VSL-00005	melter 2 feed preparation vessel
HFP-VSL-00006	melter 2 feed vessel
HOP-SCB-00002	melter 2 submerged bed scrubber (SBS)
HOP-HEME-00002A	melter 2 high efficiency mist eliminator (HEME)
HOP-HEME-00002B	melter 2 high efficiency mist eliminator (HEME)
HSH-TK-00002	decontamination tank melter cave 2

Sump HSH-SUMP-00007 is located in the central section of melter cave no 2 (H-0106). A 100% capacity ejector in the sump transfers the waste to the plant wash and drains vessel (RLD-VSL-00008). From the plant wash and drains vessel (RLD-VSL-00008), waste is transferred to breakpot RLD-BRKPT-00004. The waste is then transferred to the PT facility by gravity flow into the ultimate overflow vessel (PWD-VSL-00033). This sump is located at the 3 ft elevation.

If the capacity of the melter 2 feed preparation vessel (HFP-VSL-00005) and melter 2 feed vessel (HFP-VSL-00006) is exceeded, the excess overflows to sump HFP-SUMP-00005. Additionally, any leakage from these vessels can flow into the same sump, which is located in the south section of the cell (H-0106). A 100% capacity ejector in the sump transfers waste to the plant wash and drains vessel (RLD-VSL-00008). This sump is located at the 5 ft elevation.

If the capacity of the waste from decontamination tank melter cave 2 (HSH-TK-00002) is exceeded, the excess overflows into sump HSH-SUMP-00009 located in the melter no 2 equipment decontamination pit (H-0304A). A 100% capacity ejector in the sump transfers the waste to the plant wash and drains vessel (RLD-VSL-00008). This sump is located at the 0 ft elevation.

3.2.3 Sumps Located in Canister Handling Cave

Two sumps are located in the canister handling cave (H-0136):

HPH-SUMP-00001

HPH-SUMP-00005

These sumps collect any liquids or decontamination solutions in the canister-handling cave. A 100% capacity ejector in sump HPH-SUMP-00001 transfers the wastes to the plant wash and drains vessel (RLD-VSL-00008). The contents of sump HPH-SUMP-00005 are transferred by A 100% capacity ejector to the plant wash and drains vessel (RLD-VSL-00008). These sumps are located at the -3 ft elevation.

3.3 Sumps Located at Elevation 14 Ft

There are no regulated sumps at elevation 14 ft.

3.4 Sumps Located at Elevation 37 Ft

The sumps shown on the *HLW Vitrification Building General Arrangement (Permit) Plan at El. 37' 0"*, 24590-HLW-P1-P01T-P0004, Rev 0, are listed in Table 1, numbers 16 through 17. The sump contents flow by gravity into the plant wash and drains vessel (RLD-VSL-00008). The sumps detailed below are lined with 6 moly stainless steel liner material.

3.4.1 Sumps Located in the Active Services Cell Melter No 1

One sump is located in this cell (H-0308):

HFP-SUMP-00001

The following vessel is located in and above this cell:

HOP-WESP-00001 melter 1 wet electrostatic precipitator (WESP)

Any leakage from the melter 1 wet electrostatic precipitator (WESP) (HOP-WESP-00001) can flow into the sump (HFP-SUMP-00001). Additionally if the capacity of the transfer manifold is exceeded, sump HFP-SUMP-0001 receives the overflow. The waste from the sump drains into the plant wash and drains vessel (RLD-VSL-00008). The sump is located in the active services cell melter no 1 (H-0308). This sump is located at the 37 ft elevation.

3.4.2 Sumps Located in Active Services Cell Melter No 2

One sump is located in this cell (H-0302):

HFP-SUMP-00004

The following vessel is located in and above this cell:

HOP-WESP-00002 melter 2 wet electrostatic precipitator (WESP)

Any leakage from the melter 2 WESP (HOP-WESP-00002) can flow into the sump (HFP-SUMP-00004). Additionally if the capacity of the transfer manifold is exceeded, sump HFP-SUMP-0004 receives the overflow. The waste from the sump drains into the plant wash and drains vessel (RLD-VSL-00008). The sump is located in the active services cell melter no 2 (H-0302). This sump is located at the 37 ft elevation.

3.5 Sumps Located at Elevation 58 Ft

There are no regulated sumps at elevation 58 ft.

Table 1 HLW Sumps

Number	Sump PIN	HLW Room Number	Room Name	Elevation (Ft)	Maximum Sump Capacity (US Gal)	Sump Type	Sump Dimensions (In.)	Piping and Instrumentation Diagram Number 24590-HLW-M6-RLD-	Level Detection Type	Material of Fabrication
1	HCP-SUMP-00001	H-B014	wet process cell	−21	70	dry sump	30 in. diam × 18 in. deep	P0015	radar	6 moly
2	RLD-SUMP-00001	H-B014	wet process cell	−21	70	dry sump	30 in. diam × 18 in. deep	P0015	radar	6 moly
3	HDH-SUMP-00001	H-B039B	canister rinse tunnel	−16.5	70	dry sump	30 in. diam × 18 in. deep	P0016	radar	6 moly
4	HDH-SUMP-00002	H-B039A	canister rinse-bogie maintenance room	−16	70	dry sump	30 in. diam × 18 in. deep	P0016	radar	6 moly
5	HDH-SUMP-00003	H-B035	canister decon cave	−16	70	dry sump	30 in. diam × 18 in. deep	P0004	radar	6 moly
6	HOP-SUMP-00003	H-B021	SBS drain collection cell no 1	−21	70	dry sump	30 in. diam × 18 in. deep	P0015	radar	6 moly
7	HOP-SUMP-00008	H-B005	SBS drain collection cell no 2	−21	70	dry sump	30 in. diam × 18 in. deep	P20004	radar	6 moly
8	HSH-SUMP-00003	H-0117	melter cave no 1	3	55.6	dry sump	31.5 in. × 25.5 in. × 16 in. deep	P0008	bubbler	6 moly
9	HFP-SUMP-00002	H-0117	melter cave no 1	5	55.6	dry sump	31.5 in. × 25.5 in. × 16 in. deep	P0008	radar	6 moly
10	HSH-SUMP-00008	H-0310A	melter no 1 equipment decontamination pit	0	55.6	dry sump	31.5 in. × 25.5 in. × 16 in. deep	P0003	radar	6 moly
11	HSH-SUMP-00007	H-0106	melter cave no 2	3	55.6	dry sump	31.5 in. × 25.5 in. × 16 in. deep	P20005	bubbler	6 moly
12	HFP-SUMP-00005	H-0106	melter cave no 2	5	55.6	dry sump	31.5 in. × 25.5 in. × 16 in. deep	P20005	radar	6 moly
13	HSH-SUMP-00009	H-0304A	melter no 2 equipment decontamination pit	0	55.6	dry sump	31.5 in. × 25.5 in. × 16 in. deep	P20003	radar	6 moly
14	HPH-SUMP-00001	H-0136	canister handling cave	−3	70	dry sump	30 in. diam × 18 in. deep	P0016	radar	6 moly
15	HPH-SUMP-00005	H-0136	canister handling cave	−3	70	dry sump	30 in. diam × 18 in. deep	P0004	radar	6 moly
16	HFP-SUMP-00001	H-0308	active services cell melter no 1	37	70	gravity drain	30 in. diam × 18 in. deep	P0015	none	6 moly
17	HFP-SUMP-00004	H-0302	active services cell melter no 2	37	70	gravity drain	30 in. diam × 18 in. deep	P20004	none	6 moly

Table 2 HLW Floor Drains

Number	Drain Line Number	HLW Room Number	Room Name	Maximum Flow Capacity (US Gal/Min)*	Overflow Line Size Pipe Diam (In.)	Piping and Instrumentation Diagram Number 24590-HLW-M6-RLD-	Level Detection Type	Pipe Material of Fabrication
1	RLD-ZF-00330-S11B-03	H-B021	SBS drain collection cell no 1	20	3	P0015	NA	316L Stainless Steel
2	RLD-ZF-03447-S11B-03	H-B005	SBS drain collection cell no 2	20	3	P20004	NA	316L Stainless Steel

* **Note**: The basis for obtaining maximum flow capacity US gal/min is $d=0.92q^{0.4}$ where d = overflow line diameter in inches and q = flow rate in gal/min.

Attachment 51 – Appendix 10.6
High Level Waste Building
Mechanical Drawings

Where information regarding treatment, management, and disposal of the radioactive source, byproduct material, and/or special nuclear components of mixed waste (as defined by the Atomic Energy Act of 1954, as amended) has been incorporated into this permit, it is not incorporated for the purpose of regulating the radiation hazards of such components under the authority of this permit and chapter 70.105 RCW. In the event of any conflict between Permit Condition III.10.A. and any statement relating to the regulation of source, special nuclear, and byproduct material contained in portions of the permit application that are incorporated into this permit, Permit Condition III.10.A. will prevail.

Additional appendices will be added to this appendix as new information is incorporated into this permit.

Drawings and Documents

Attachment 51 – Appendix 10.6

High Level Waste Building
Mechanical Drawings

The following drawings have been incorporated into Appendix 10.6 and can be viewed at the Ecology Richland Office. **New drawings are in bold lettering**.

Drawing/Document	Description
24590-HLW-M0-HDH-P0012001, Rev 1	Equipment Assembly Drawing for HDH Canister Rinse Bogie
24590-HLW-M0-HDH-P0012002, Rev 1	Equipment Assembly Drawing for HDH Canister Rinse Bogie
24590-HLW-M0-HSH-P0072, Rev 1	**Equipment Assembly Drawing: HLW-HSH-Design Proposal Drawing Decontamination Tank**
24590-HLW-MOD-HMP-P0001, Rev 1	Mechanical Data Sheet: HLW Melter 1
24590-HLW-MOD-HMP-P0002, Rev 0	Mechanical Data Sheet: HLW Melter 2
24590-HLW-MAD-HOP-P0010, Rev 0	Mechanical Data Sheet: HOP-HEPA-00001A
24590-HLW-MAD-HOP-P0011, Rev 0	Mechanical Data Sheet: HOP-HEPA-00002A
24590-HLW-MAD-HOP-P0012, Rev 0	Mechanical Data Sheet: HOP-HEPA-00001B
24590-HLW-MAD-HOP-P0013, Rev 0	Mechanical Data Sheet: HOP-HEPA-00002B
24590-HLW-MAD-HOP-P0014, Rev 0	Mechanical Data Sheet: HOP-HEPA-00007A
24590-HLW-MAD-HOP-P0015, Rev 0	Mechanical Data Sheet: HOP-HEPA-00008A
24590-HLW-MAD-HOP-P0016, Rev 0	Mechanical Data Sheet: HOP-HEPA-00007B
24590-HLW-MAD-HOP-P0017, Rev 0	Mechanical Data Sheet: HOP-HEPA-00008B
24590-HLW-MAD-HOP-P0018, Rev 2	Centrifugal Blower Data Sheets for HOP-FAN-00001A/B/C and HOP-FAN-00009A/B/C
24590-HLW-MAD-HOP-P0019, Rev 0	Centrifugal Blower Data Sheets for HOP-FAN-0000B
24590-HLW-MAD-HOP-P0020, Rev 0	Centrifugal Blower Data Sheets for HOP-FAN-00001C
24590-HLW-MAD-HOP-P0035, Rev 0	Centrifugal Blower Data Sheets for HOP-FAN-00009A
24590-HLW-MAD-HOP-P0036, Rev 0	Centrifugal Blower Data Sheets for HOP-FAN-00009B
24590-HLW-MAD-HOP-P0037, Rev 0	Centrifugal Blower Data Sheets for HOP-FAN-00009C
24590-HLW-MAD-HOP-P0038, Rev 0	Centrifugal Blower Data Sheet: HOP-FAN-00008A/8B/8C/10A/10B/10C
24590-HLW-MAD-PJV-P0004, Rev 0	Mechanical Data Sheet for PJV-HEPA-00004A
24590-HLW-MAD-PJV-P0005, Rev 0	Mechanical Data Sheet for PJV-HE;A-00005A
24590-HLW-MAD-PJV-P0006, Rev 0	Mechanical Data Sheet for PJV-HEPA-00004B
24590-HLW-MAD-PJV-P0007, Rev 0	Mechanical Data Sheet for PJV-HEPA-00005B
24590-HLW-MED-HOP-P0012, Rev 1	Mechanical Data Sheet for HOP-HX-00002
24590-HLW-MED-HOP-P0013, Rev 0	Mechanical Data Sheet for HOP-HTR-00001B/2A/5A/5B
24590-HLW-MED-HOP-P0017, Rev 1	Mechanical Data Sheet for HOP-HX-00004
24590-HLW-MED-PJV-P0002, Rev 0	Mechanical Data Sheet for PJV-HTR-00002
24590-HLW–MKD-HOP-P0014, Rev 1	Mechanical Data Sheet for HOP-ABS-00002
24590-HLW-MKD-HOP-P0016, Rev 0	Mechanical Data Sheet for HOP-SCB-00001/2
24590-HLW-MKD-HOP-P0017, Rev 0	Mechanical Data Sheet for HOP-ABS-00003
24590-HLW-MKD-HOP-P0019, Rev 0	Mechanical Data Sheet for HOP-SCO-00002
24590-HLW-MKD-HOP-P0020, Rev 0	Mechanical Data Sheet for HOP-SCO-00003

Drawing/Document	Description
24590-HLW-MK-HOP-P0001001, Rev 0	Equipment Assembly Drawing for HOP-SCB-00001/2 Sheet 1 of 4
24590-HLW-MK-HOP-P0001002, Rev 0	Equipment Assembly Drawing for HOP-SCB-00001/2 Sheet 2 of 4
24590-HLW-MK-HOP-P0001003, Rev 0	Equipment Assembly Drawing for HOP-SCB-00001/2 Sheet 3 of 4
24590-HLW-MK-HOP-P0001004, Rev 0	Equipment Assembly Drawing for HOP-SCB-00001/2 Sheet 4 of 4
24590-HLW-MVD-HDH-P0003, Rev 2	Mechanical Data Sheet for HDH-VSL-00003
24590-HLW-MVD-HDH-P0006, Rev 2	Mechanical Data Sheet for HDH-VSL-00002
24590-HLW-MVD-HDH-P0009, Rev 0	Mechanical Data Sheet for HDH-VSL-00001
24590-HLW-MVD-HDH-P0012, Rev 1	Mechanical Data Sheet for HDH-VSL-00004
24590-HLW–MVD-HOP-P0001, Rev 2	Mechanical Data Sheet for HOP-VSL-00903
24590-HLW-MVD-HOP-P0007, Rev 0	Mechanical Data Sheet for HOP-HEME-00001A/1B/2A/2B
24590-HLW–MVD-HOP-P0012, Rev 1	Mechanical Data Sheet for HOP-VSL-00904
24590-HLW-MVD-HOP-P0015, Rev 1	**Mechanical Data Sheet for HOP-ADBR-00001A/B**
24590-HLW-MVD-HOP-P0016, Rev 1	**Mechanical Data Sheet for HOP-ADBR-00002A/B**
24590-HLW-MVD-RLD-P0005, Rev 0	Mechanical Data Sheet for RLD-VSL-00007
24590-HLW-MVD-RLD-P0007, Rev 1	Mechanical Data Sheet for RLD-VSL-00008
24590-HLW-MVD-RLD-P0008, Rev 1	Mechanical Data Sheet for RLD-VSL-00002
24590-HLW-MV-HDH-P0003, Rev 1	Equipment Assembly Drawing for HDH-VSL-00003
24590-HLW-MV-HDH-P0004, Rev 1	Equipment Assembly Drawing for HDH-VSL-00002, Sheet 1 of 2
24590-HLW-MV-HDH-P0005, Rev 1	Equipment Assembly Drawing for HDH-VSL-00002, Sheet 2 of 2
24590-HLW-MV-HDH-P0006, Rev 0	Equipment Assembly Drawing for HDH-VSL-00004, Sheet 1 of 2
24590-HLW-MV-HDH-P0007, Rev 0	Equipment Assembly Drawing for HDH-VSL-00004, Sheet 2 of 2
24590-HLW–MV-HOP-P0001, Rev 2	Equipment Assembly Drawing for HOP-VSL-00903
24590-HLW-MV-HOP-P0002001, Rev 0	Equipment Assembly Drawing for HOP-HEME-00001A/1B Sheet 1 of 3
24590-HLW-MV-HOP-P0002002, Rev 0	Equipment Assembly Drawing for HOP-HEME-00001A/1B Sheet 2 of 3
24590-HLW-MV-HOP-P0002003, Rev 0	Equipment Assembly Drawing for HOP-HEME-00001A/1B Sheet 3 of 3
24590-HLW–MV-HOP-P0003, Rev 2	Equipment Assembly Drawing for HOP-VSL-00904
24590-HLW-MV-RLD-P0002, Rev. 0	Equipment Assembly Drawing for RLD-VSL-00002
24590-HLW-MV-RLD-P0003, Rev. 0	Equipment Assembly Drawing for RLD-VSL-00007
24590-HLW-MV-RLD-P0004, Rev. 0	Equipment Assembly Drawing for RLD-VSL-00008
RESERVED	RESERVED

RPP-WTP	DATA SHEET HIGH LEVEL WASTE MELTER 1	Data Sheet Number	24590-HLW-M0D-HMP-P0001
		Plant Item Number	24590-HLW-ME-HMP-MLTR-00001
		This bound document contains a total of 1 sheet	

System: HMP

Project: RPP-WTP

Project No: 24590

Site: Hanford

Function: Convert blended HLW slurry and glass formers into glass and deliver glass to canisters

Reference Documents:

24590-HLW-3PS-AE00-TP001, Engineering Specification for High Level Waste Melters

deleted

deleted

deleted

deleted

WALTER PAUL DROSTACK
STATE OF WASHINGTON
REGISTERED PROFESSIONAL ENGINEER

4/27/06

EXPIRES 6/6/07

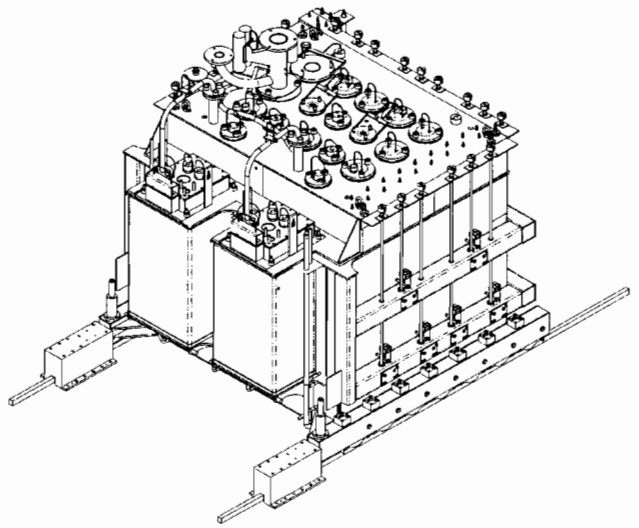

ISSUED BY
RPP-WTP PDC

R10673689

MECHANICAL

	Units			Units	
Melter Design Life	years	5	Melter Base, Rail Center to Center Distance	inches	148.00
Maximum Outside Dimensions (L x W x H)	inches	172 x 164 x 146	Maximum Assembled Weight, Empty	pounds	174,000
Plant Elevation, top of rail	ft-in	2 - 11	Maximum Assembled Weight with Glass	pounds	198,000

PROCESS

Design Glass Production	MT/D	3.0	Thermal load to cave from melter (idle and feed modes)	kW	35 max
Glass Tank Volume	ft^3	144	Melter Cooling Water	GPM	50 (nominal)
Glass Tank Surface Dimensions (L x W)	inches	60 x 96	Melter Cooling Water	Delta T (°F)	15 (nominal)
Max Operating Glass Depth	inches	44			
Design Glass Operating Temperature (max)	°F	2200			

ELECTRICAL

Electrodes, kW	600 maximum
Start-up Heaters, kW	183 total maximum
Discharge Chamber, kW	56 max per chamber

CONTROLS AND INSTRUMENTATION

deleted

deleted

MAJOR COMPONENTS - Materials

Melter Shell and Base	A500, A36, 304L, C276		Cooling Panels	C276, 316L
Melter and Discharge Chamber Lids	304L, Alloy 690		Discharge Chamber Trough and Dam	Alloy 690
Electrodes	Alloy 690		Film Cooler	Alloy 690

REPLACEABLE COMPONENTS

	Number	Design Life (months)		Number	Design Life (months)
Feed Nozzle	2	60	Discharge Chamber Lid Assembly	2	30
Film Cooler	1	60	Discharge Chamber Vent Line	2	60
Air Lift Lance	2	60	Discharge Chamber Vent Insert	2	60
Level Probe	1	12	Discharge Chamber Thermowell	4	60
Plenum/Glass Pool Thermocouple	2	4	Discharge Chamber Thermocouple	4	12
Plenum/Glass Pool Thermowell	2	9	Electrode Thermocouple Assembly	3	12
Refractory Thermocouple Assy	2	12	Plenum View Camera	1	12
Bubblers	5	2	Start-up Heaters	5	3

NOTES

Note 1: Contents of this document are Dangerous Waste Permit affecting.

Note 2: Please note that source, special nuclear and byproduct materials, as defined in the Atomic Energy Act of 1954 (AEA), are regulated at the U.S. Department of Energy (DOE) facilities exclusively by DOE acting pursuant to its AEA authority. DOE asserts, that pursuant to the AEA, it has sole and exclusive responsibility and authority to regulate source, special nuclear, and byproduct materials at DOE-owned nuclear facilities. Information contained herein on radionuclides is provided for process description purposes only.

Date	Rev	Reason for Revision	Prepared	Checked	Approved
4/27/06	1	Revised to correct typographical error	Mark Hall	Loyd Donovan/Lisa Han	
1/31/2005	0	Issued for Permitting Use	Mark Hall	Lawrence Curtis	Will Eaton

RPP-WTP	DATA SHEET HIGH LEVEL WASTE MELTER 2	Data Sheet Number	24590-HLW-M0D-HMP-P0002
		Plant Item Number	24590-HLW-ME-HMP-MLTR-00002
		This bound document contains a total of 1 sheet	

System: HMP
Project: RPP-WTP
Project No: 24590
Site: Hanford
Function: Convert blended HLW slurry and glass formers into glass and deliver glass to canisters

Reference Documents:
24590-HLW-3PS-AE00-TP001, Engineering Specification for High Level Waste Melters
deleted
deleted
deleted
deleted

WALTER PAUL DROSJACK
STATE OF WASHINGTON
41231
REGISTERED
PROFESSIONAL ENGINEER

1/31/05

EXPIRES 6/6/05

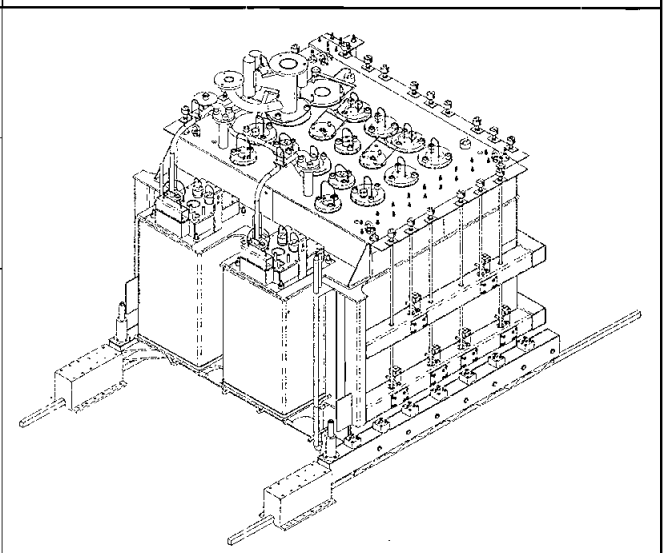

MECHANICAL

	Units			Units	
Melter Design Life	years	5	Melter Base, Rail Center to Center Distance	inches	148.00
Maximum Outside Dimensions (L x W x H)	inches	172 x 164 x 146	Maximum Assembled Weight, Empty	pounds	174,000
Plant Elevation, top of rail	ft-in	2 - 11	Maximum Assembled Weight with Glass	pounds	198,000

PROCESS

Design Glass Production	MT/D	3.0	Thermal load to cave from melter (idle and feed modes)	kW	35 max
Glass Tank Volume	ft^3	144	Melter Cooling Water	GPM	50 (nominal)
Glass Tank Surface Dimensions (L x W)	inches	60 x 96	Melter Cooling Water	Delta T (°F)	15 (nominal)
Max Operating Glass Depth	inches	44			
Design Glass Operating Temperature (max)	°F	2200			

ELECTRICAL

Electrodes, kW	600 maximum
Start-up Heaters, kW	183 total maximum
Discharge Chamber, kW	56 max per chamber

CONTROLS AND INSTRUMENTATION

deleted
deleted

MAJOR COMPONENTS - Materials

Melter Shell and Base	A500, A36, 304L, C276		Cooling Panels	C276, 316L
Melter and Discharge Chamber Lids	304L, Alloy 690		Discharge Chamber Trough and Dam	Alloy 690
Electrodes	Alloy 690		Film Cooler	Alloy 690

REPLACEABLE COMPONENTS

	Number	Design Life (months)		Number	Design Life (months)
Feed Nozzle	2	60	Discharge Chamber Lid Assembly	2	30
Film Cooler	1	60	Discharge Chamber Vent Line	2	60
Air Lift Lance	2	60	Discharge Chamber Vent Insert	2	60
Level Probe	1	12	Discharge Chamber Thermowell	4	60
Plenum/Glass Pool Thermocouple	2	4	Discharge Chamber Thermocouple	4	12
Plenum/Glass Pool Thermowell	2	9	Electrode Thermocouple Assembly	3	12
Refractory Thermocouple Assy	2	12	Plenum View Camera	1	12
Bubblers	5	2	Start-up Heaters	5	3

NOTES

Note 1: Contents of this document are Dangerous Waste Permit affecting.

Note 2: Please note that source, special nuclear and byproduct materials, as defined in the Atomic Energy Act of 1954 (AEA), are regulated at the U.S. Department of Energy (DOE) facilities exclusively by DOE acting pursuant to its AEA authority. DOE asserts, that pursuant to the AEA, it has sole and exclusive responsibility and authority to regulate source, special nuclear, and byproduct materials at DOE-owned nuclear facilities. Information contained herein on radionuclides is provided for process description purposes only.

Date	Rev	Reason for Revision	Prepared	Checked	Approved
1/31/05	0	Issued for Permitting Use	Mark Hall	Lawrence Curtis	Will Eaton

ISSUED BY
RPP-WTP PDC

R10482355

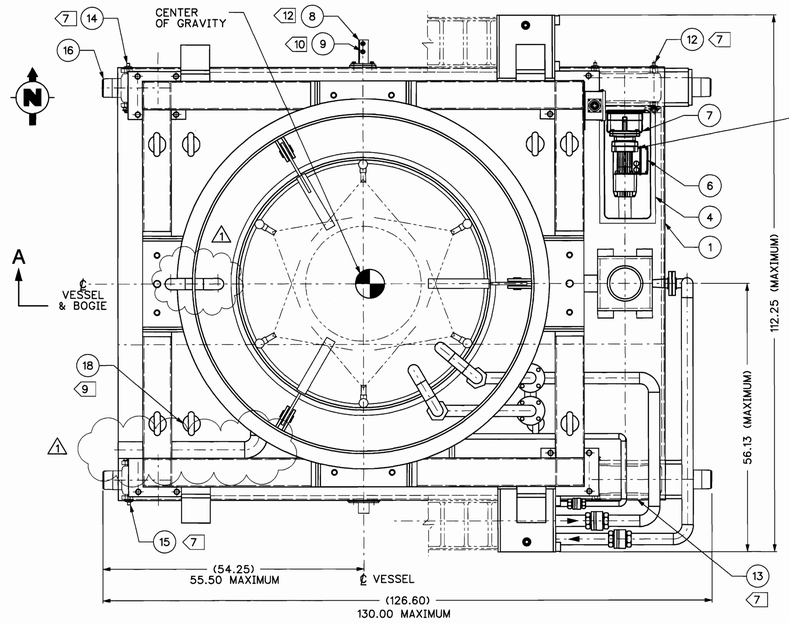

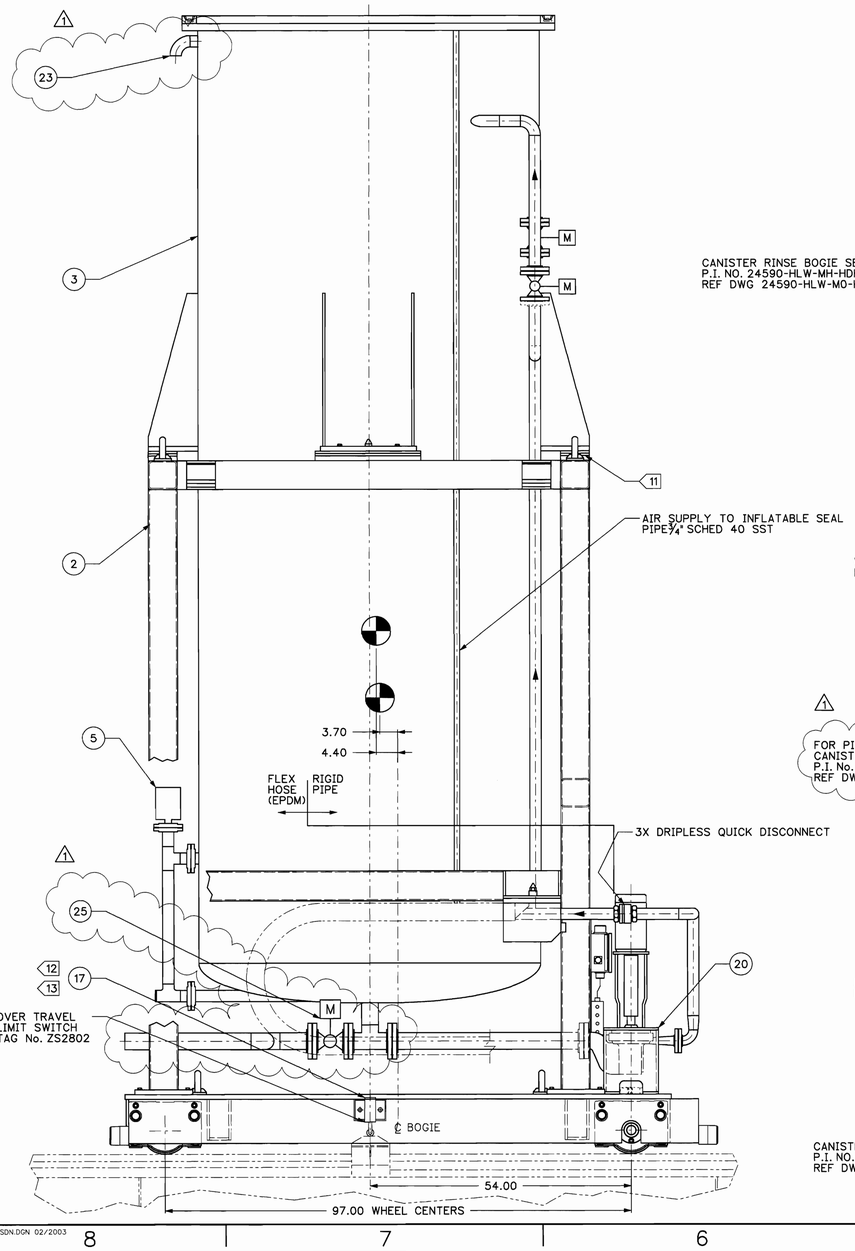

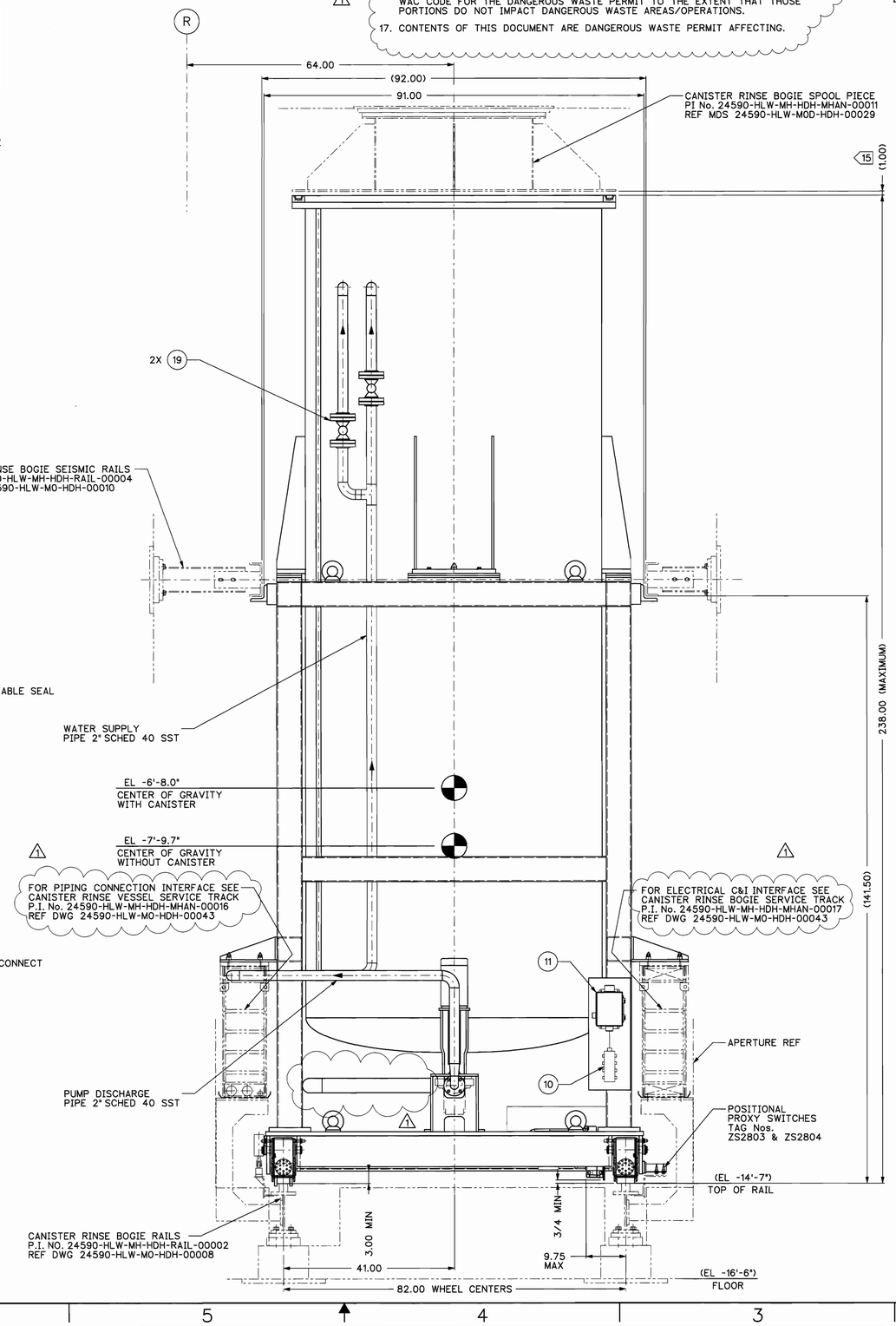

7 BOGIE WHEEL LOADS (INCLUDES HOIST LOAD FACTOR):

WHEEL LOADS (LBF)	
ITEM	VERTICAL LOAD
12	7763
13	7763
14	9327
15	9327

8 BOGIE PRIMARY OPERATING SPEEDS:
3 FT/MIN CREEP.
10 FT/MIN NORMAL.

9 LIFTING FEATURES TO BE PROVIDED TO ALLOW FOR INSTALLATION AND REMOVAL OF BOGIE CHASSIS AND CANISTER RINSE VESSEL, AND TO ASSIST WITH MAINTENANCE ACTIVITIES.

10 PROXIMITY SWITCHES, (ONE PRIMARY AND ONE BACKUP) SHALL BE ADJUSTABLE TO ALLOW FOR ON-SITE SETTING IN CONJUNCTION WITH POSITIONING TARGETS AT PROCESS STATIONS.

11 SHIMS SHALL BE PROVIDED TO ALLOW FOR LEVELING OF CANISTER RINSE VESSEL ON ASSEMBLY.

12 LIMIT SWITCH STRIKER BRACKET AND PROXIMITY SENSOR FLAG TO BE ADJUSTABLE FOR ON-SITE INSTALLATION.

13 LIMIT SWITCH STRIKER BRACKET FOR OPERATION IN 2 DIRECTIONS.

1 14 NOTE DELETED.

15 GAP BETWEEN TOP OF VESSEL AND SPOOL PIECE TO BE DETERMINED BY SUPPLIER IN CONJUNCTION WITH INFLATABLE SEAL REQUIREMENTS.

1 16. THE PORTIONS OF THIS DRAWING SHOWN IN PHANTOM ARE CONSIDERED NON-PERMIT AFFECTING AND ARE NOT SUBJECT TO THE REGULATORY REQUIREMENTS OF THE WAC CODE FOR THE DANGEROUS WASTE PERMIT TO THE EXTENT THAT THOSE PORTIONS DO NOT IMPACT DANGEROUS WASTE AREAS/OPERATIONS.

17. CONTENTS OF THIS DOCUMENT ARE DANGEROUS WASTE PERMIT AFFECTING.

PARTS/MATERIAL LIST

ITEM	QTY	DESCRIPTION	REFERENCE	
1	1	BOGIE CHASSIS		CS
2	1	VESSEL SUPPORT FRAME		CS
3	1	CANISTER RINSE VESSEL	24590-HLW-M0-HDH-P0012002	SST
4	1	DRIVE SYSTEM DUST COVER		CS
5	1	LEVEL DETECTOR SERIES 508-45	DREXELBROOK OR EQUAL	
6	1	BRAKE MOTOR	MANNESMANN DEMATIC OR EQUAL	
7	1	OFFSET GEARBOX	MANNESMANN DEMATIC OR EQUAL	
8	1	PROXIMITY SENSOR BRACKET		CS
9	2	PROXIMITY SENSOR	KLASCHKA OR EQUAL	
10	1	CONTROL (24V) ELECTRICAL JUNCTION BOX		CS
11	1	POWER ELECTRICAL JUNCTION BOX		CS
12	1	WHEEL BLOCK-DRS 250, TYPE B (PLAIN DRVN)	MANNESMANN DEMATIC OR EQUAL	
13	1	WHEEL BLOCK-DRS 250, TYPE A (FLANGED DRVN)	MANNESMANN DEMATIC OR EQUAL	
14	1	WHEEL BLOCK-DRS 250, TYPE B (PLAIN NON-DRVN)	MANNESMANN DEMATIC OR EQUAL	
15	1	WHEEL BLOCK-DRS 250, TYPE A (FLANGED NON-DRVN)	MANNESMANN DEMATIC OR EQUAL	
16	4	RUBBER BUFFER - DPG 100	MANNESMANN DEMATIC OR EQUAL	
17	1	ULTIMATE TRAVEL LIMIT SWITCH	NAMCO OR EQUAL	
18	8	LIFTING EYE		CS
19	2	2" BALL VALVE 2 WAY ELECTRIC		SST
20	1	PROCESS PUMP, 80 GPM, 42.6 FT HEAD, 1.39 BHP	GOULD OR EQUAL	
21	1	INFLATABLE SEAL WITH RETAINER CODE G-12	SEAL MASTER OR EQUAL	
22	1	SPRAY CAGE/CANISTER GUIDE		SST
23	1	VENT TUBE		SST
24	1	PEDESTAL		SST
25	1	3" BALL VALVE 2 WAY ELECTRIC		SST
26	1	LEVEL SWITCH MODEL TQ	K-TEK OR EQUAL	SST

NOTES:

1. SELECTION OF COMMERCIAL COMPONENTS ON THIS DRAWING IS A BUYER'S PROPOSAL ONLY. THE SUPPLIER SHALL BE RESPONSIBLE FOR FULL VALIDATION OF THE COMPONENTS SELECTED FOR THE CONTRACTED APPLICATION WHETHER IDENTICAL TO THE BUYER'S PROPOSAL OR OTHERWISE.
2. ALL DIMENSIONS ARE IN INCHES UNLESS OTHERWISE STATED.
3. MATERIALS:
THE BOGIE CHASSIS AND VESSEL SUPPORT FRAME SHALL BE CONSTRUCTED FROM CARBON STEEL. THE VESSEL AND ASSOCIATED COMPONENTS SHALL BE CONSTRUCTED FROM STAINLESS STEEL.
4. REFERENCE TECHNICAL SPECIFICATION 24590-HLW-3PS-MQR0-TP002 FOR DESIGN AND FABRICATION REQUIREMENTS.
1 5. GROSS WEIGHT OF BOGIE CHASSIS AND DRIVE COMPONENTS: 5140 LBS.
GROSS WEIGHT OF VESSEL AND INTERNAL COMPONENTS: 8170 LBS
GROSS WEIGHT OF VESSEL SUPPORT FRAME: 2360 LBS.
MAXIMUM WEIGHT OF CANISTER: 9260 LBS.
TOTAL WEIGHT OF CANISTER RINSE BOGIE WITHOUT CANISTER: 15670 LBS.
TOTAL WEIGHT OF CANISTER RINSE BOGIE WITH CANISTER: 24930 LBS
MAXIMUM BOUNDING WEIGHT OF BOGIE AND CANISTER (INCLUDING MAXIMUM STATIC HEAD OF WATER): 30000 LBS.

6 DRIVE SYSTEM DETAILS:
BRAKE MOTOR - MANNESMANN DEMATIC, 1/3 HP, 820 RPM, 460V 60 Hz/3 PH, VARIABLE SPEED DRIVE TYPE ZBA80A8 B007 OR EQUAL.
OFFSET GEAR BOX - MANNESMANN DEMATIC, WITH TORQUE BRACKET, 218:1 REDUCTION, TYPE ADE50TD OR EQUAL.

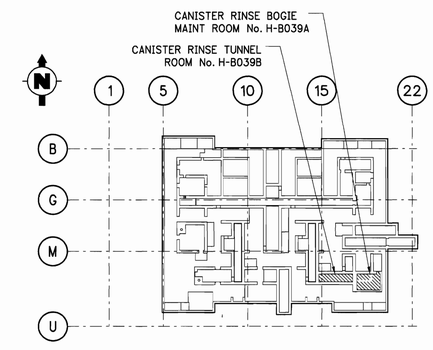

KEY PLAN AT EL -21'-0"

1 PLEASE NOTE THAT SOURCE, SPECIAL NUCLEAR AND BYPRODUCT MATERIALS, AS DEFINED IN THE ATOMIC ENERGY ACT OF 1954 (AEA), ARE REGULATED AT THE U.S. DEPARTMENT OF ENERGY (DOE) FACILITIES EXCLUSIVELY BY DOE ACTING PURSUANT TO ITS AEA AUTHORITY. DOE ASSERTS, THAT PURSUANT TO THE AEA, IT HAS SOLE AND EXCLUSIVE RESPONSIBILITY AND AUTHORITY TO REGULATE SOURCE, SPECIAL NUCLEAR, AND BYPRODUCT MATERIALS AT DOE-OWNED NUCLEAR FACILITIES. INFORMATION CONTAINED HEREIN ON RADIONUCLIDES IS PROVIDED FOR PROCESS DESCRIPTION PURPOSES ONLY.

PLANT ITEM No's
24590-HLW-MQ-HDH-TRLY-00003
24590-HLW-MV-HDH-VSL-P0001

DRAWING INDEX

DWG NO	REV	TITLE
24590-HLW-M0-HDH-P0012001	1	HLW VIT SYS HDH DPD CANISTER RINSE BOGIE
24590-HLW-M0-HDH-P0012002	1	HLW VIT SYS HDH DPD CANISTER RINSE BOGIE

REFERENCE DRAWINGS

DWG NO	TITLE
24590-HLW-M6-HDH-P0001	P&ID-HLW CANISTER DECONTAMINATION HANDLING SYSTEM
24590-HLW-M0-HDH-00008	HLW VIT SYS HDH DPD CANISTER RINSE BOGIE RAILS
24590-HLW-M0-HDH-00010	HLW VIT SYS HDH DPD CANISTER RINSE BOGIE SEISMIC RAILS
24590-HLW-M0-HDH-00013	HLW VIT SYS HDH DPD CANISTER RINSE BOGIE ARRANGEMENT
24590-HLW-P1-P01T-P0001	HLW VIT BLDG GA PLAN AT EL -21'-0"
24590-HLW-P1-P01T-P0009	HLW VIT BLDG GA SECTIONS D-D, E-E & F-F
24590-HLW-P1-P01T-P0010	HLW VIT BLDG GA SECTION G-G AND SECTION H-H
24590-HLW-M0-HDH-00043	HLW VIT SYS HDH DPD CANISTER RINSE BOGIE SERVICE TRACKS

Grant P. Man 3/22/04
GRANT D. MAN
STATE OF WASHINGTON
23770
REGISTERED PROFESSIONAL ENGINEER
EXPIRES 12-26-05

THIRD ANGLE PROJECTION

TOLERANCES
NO TOLERANCES ARE APPLIED TO DIMENSIONS, UNLESS NOTED.

REVISION HISTORY

REV	DESCRIPTION	ORG	CHKD	RVWD	APVD	DATE
1	ISSUED FOR PERMITTING USE					3/22/04
0	ISSUED FOR PERMITTING USE	JH	LH		DJW	10-09-02

ISSUED BY RPP-WTP PDC C.O. 32416-1 NET DATE ISSUE STAMP

PROJECT No.	24590	
SITE	HANFORD	
AREA	200E	
BUILDING No.	30	
	BY	DATE
ORIGINATOR	J HANCOCK	10-09-02
CHECKER	L HOPKINSON	10-09-02
APPROVER	DJ WILSEY	10-09-02
REVIEWER	Grant P. Man	3/22/04

CONTENT APPLICABLE TO ALARA? [X] YES [ ] NO
ADR NO. N/A REV:

BECHTEL

RIVER PROTECTION PROJECT
WASTE TREATMENT PLANT
2435 STEVENS CENTER PLACE
RICHLAND, WA 99352

CONTRACT No: DE-AC27-01RV14136

HLW VITRIFICATION SYSTEM HDH DESIGN PROPOSAL DRAWING CANISTER RINSE BOGIE

SCALE: 1" = 1'-0"

24590-HLW-M0-HDH-P0012001 REV 1

"E" SIZE - 44x34
COMPUTER GENERATED - MANUAL CHANGES NOT PERMITTED

03/22/2004 01:02:58 PM

PLOTTED BY: jrsandke
C:\Work\dms04227\HLW\M0\HDH\P0012001.dgn

R1027820

FORM E_SDN.DGN 02/2003

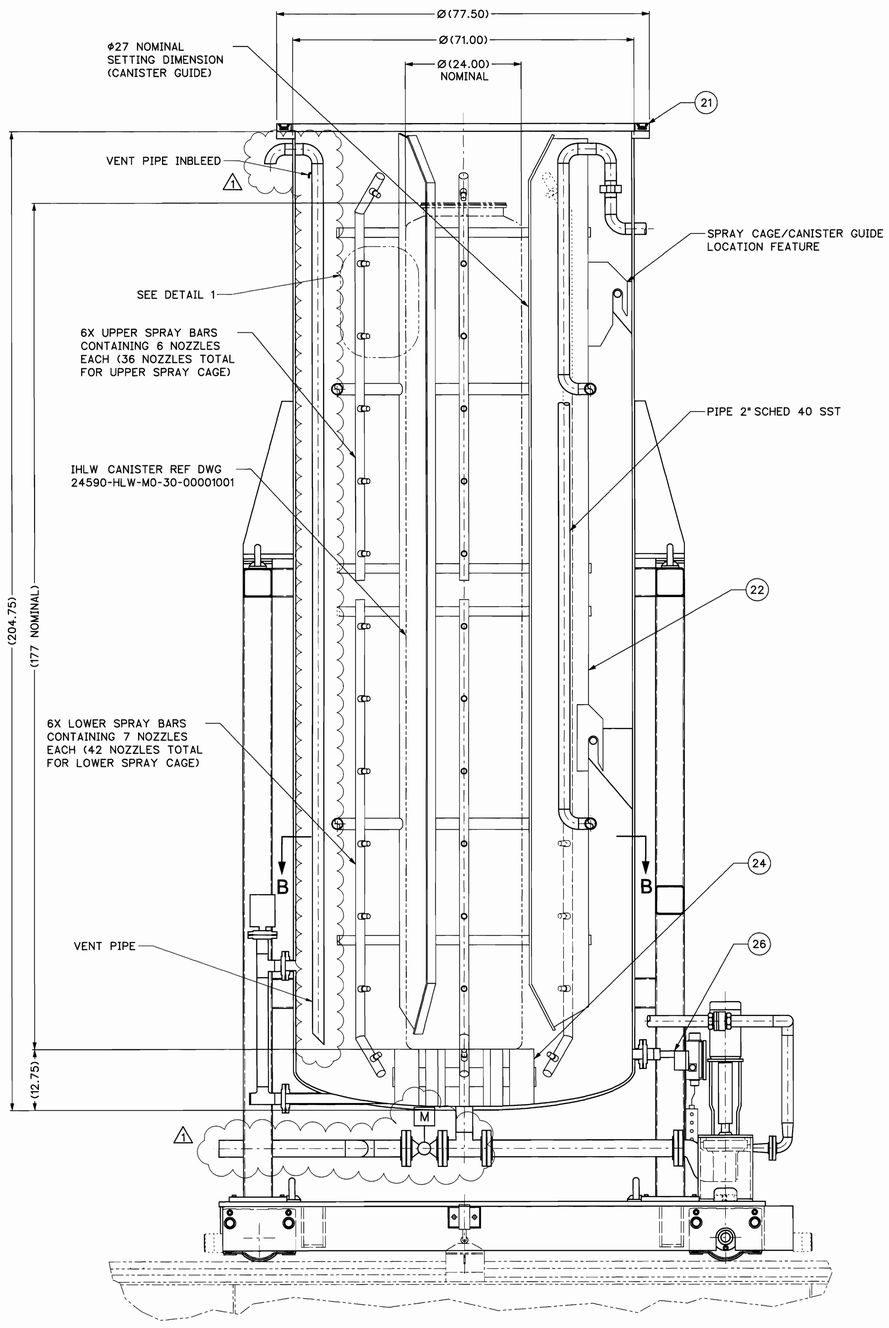

SECTION A-A

SEE DWG 24590-HLW-M0-HDH-P0012001

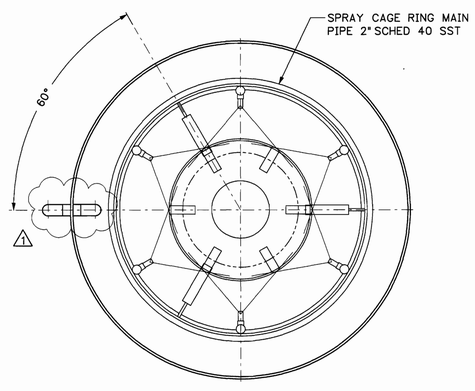

SECTION B-B

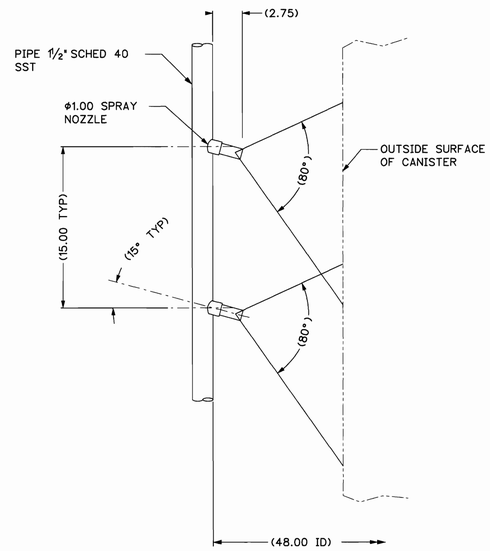

NOTE: NOZZLE TO CANISTER DISTANCE SHOWN IN TRUE ORIENTATION FOR CLARITY.

DETAIL 1

SCALE: 3/16" = 1"

NOTES:

1. FOR NOTES AND PARTS/MATERIAL LIST REF DWG 24590-HLW-M0-HDH-P0012001.
2. THE PORTIONS OF THIS DRAWING SHOWN IN PHANTOM ARE CONSIDERED NON-PERMIT AFFECTING AND ARE NOT SUBJECT TO THE REGULATORY REQUIREMENTS OF THE WAC CODE FOR THE DANGEROUS WASTE PERMIT TO THE EXTENT THAT THOSE PORTIONS DO NOT IMPACT DANGEROUS WASTE AREAS/OPERATIONS.
3. CONTENTS OF THIS DOCUMENT ARE DANGER WASTE PERMIT AFFECTING.

PLEASE NOTE THAT SOURCE, SPECIAL NUCLEAR AND BYPRODUCT MATERIALS, AS DEFINED IN THE ATOMIC ENERGY ACT OF 1954 (AEA), ARE REGULATED AT THE U.S. DEPARTMENT OF ENERGY (DOE) FACILITIES EXCLUSIVELY BY DOE ACTING PURSUANT TO ITS AEA AUTHORITY. DOE ASSERTS, THAT PURSUANT TO THE AEA, IT HAS SOLE AND EXCLUSIVE RESPONSIBILITY AND AUTHORITY TO REGULATE SOURCE, SPECIAL NUCLEAR, AND BYPRODUCT MATERIALS AT DOE-OWNED NUCLEAR FACILITIES. INFORMATION CONTAINED HEREIN ON RADIONUCLIDES IS PROVIDED FOR PROCESS DESCRIPTION PURPOSES ONLY.

SEAL OF WASHINGTON GRANT D. WEBB 23770 REGISTERED PROFESSIONAL ENGINEER
EXPIRES 12-26-05
3/22/04

REFERENCE DRAWINGS

DWG NO	TITLE
24590-HLW-M0-HDH-P0012001	HLW VIT SYS HDH DPD CANISTER RINSE BOGIE

THIRD ANGLE PROJECTION

TOLERANCES

NO TOLERANCES ARE APPLIED TO DIMENSIONS, UNLESS NOTED.

REVISION HISTORY

REV	DESCRIPTION	ORG	CHKD	RVWD	APVD	DATE
1	ISSUED FOR PERMITTING USE					3/22/04
0	ISSUED FOR PERMIT USE	JH	LH		DJW	10-09-02

ISSUED BY RPP-WTP PDC INIT DATE ISSUE STAMP

PROJECT No.	24590	
SITE	HANFORD	
AREA	200E	
BUILDING No.	30	
	BY	DATE
ORIGINATOR	J HANCOCK	10-09-02
CHECKER	L HOPKINSON	10-09-02
APPROVER	DJ WILSEY	10-09-02
REVIEWER		3/22/04

CONTENT APPLICABLE TO ALARA? [X] YES [ ] NO
ADR NO. N/A REV:

BECHTEL

RIVER PROTECTION PROJECT
WASTE TREATMENT PLANT
2435 STEVENS CENTER PLACE
RICHLAND, WA 99352

CONTRACT No: DE-AC27-01RV14136

HLW VITRIFICATION SYSTEM HDH DESIGN PROPOSAL DRAWING CANISTER RINSE BOGIE

SCALE: 1" = 1'-0"

24590-HLW-M0-HDH-P0012002

REV 1

R1027521

PLOTTED BY: jsandbe
E:\Work\dmsd4227\HLW\M0\HDH\P0012002.dgn

03/22/2004 01:01:20 PM

FORM E_SDN.DGN 02/2003

"E" SIZE - 44x34
COMPUTER GENERATED - MANUAL CHANGES NOT PERMITTED

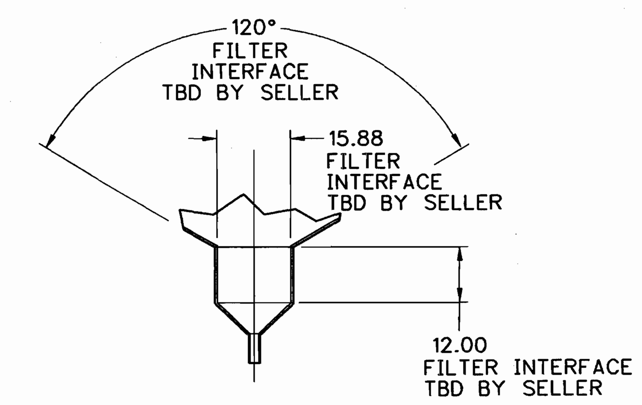

DETAIL 1

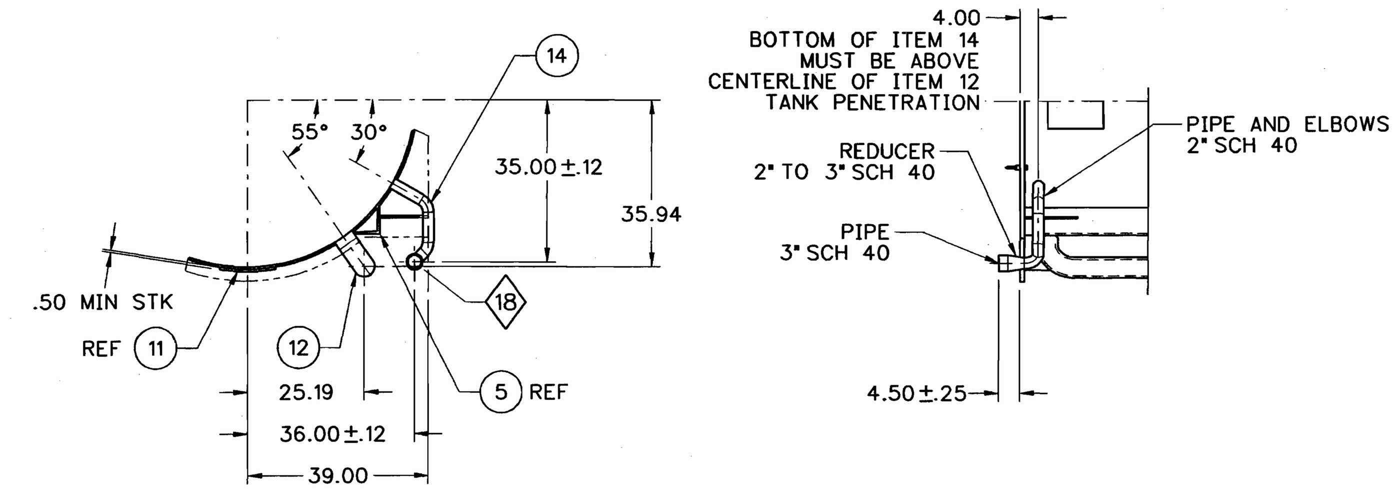

SECTION E-E

	ITEM	QTY	DESCRIPTION	REFERENCE	MATL
			PARTS/MATERIAL LIST		
13	1	X	DECON TANK WELDMENT		
	2	1	TOP TANK RING		316L
	3	2	TANK RING		316L
	4	AR	TANK SHELL		316L
	5	AR	SHELL SUPPORT (6.00 x 6.00 ANGLE SHOWN)		316L
	6	AR	SUPPORT DOUBLER PLATE		316L
	7	4	SUPPORT LEG (8.00 PIPE SHOWN)		316L
	8	4	FOOT PLATE		316L
	9	4	LEG GUSSET		316L
	10	AR	TANK RING SUPPORT GUSSET		316L
	11	4	SIESMIC BUMPER PAD		316L
	12	AR	OVERFLOW PIPING - FROM 4.00 SCHED 40S		316L
	13		(NOT USED)		316L
	14	AR	PARTS WASHER DRAIN PIPING - FROM 2.00 AND 3.00 SCHED 40S		316L
	15	1	TANK DRAIN PIPE STUB - 2.00 SCHED 40S X 6.00 MIN LG		316L
	16	2	GROUNDING TAB		316L
	17	1	SPRAY & SPARGE SYSTEM PRIMARY LOCATING PIN (φ1.00)		316L
	18	1	SPRAY & SPARGE SYSTEM SECONDARY LOCATING PIN, (φ1.00)		316L
	19	1	PUMP PKG PRIMARY LOCATING PIN, (φ2.00)		316L
	20	1	PUMP PKG SECONDARY LOCATING PIN, (φ2.00)		316L
	21	2	PUMP PKG GUIDE PIN (φ2.00)		316L
13	22	X	TANK DRAIN PIPING WELDMENT		
11	23	1	JUMPER NOZZLE		316L
	24	AR	PIPING - FROM 2.00 SCHED 40S		316L
	25	1	NOZZLE SUPPORT WELDMENT		316L

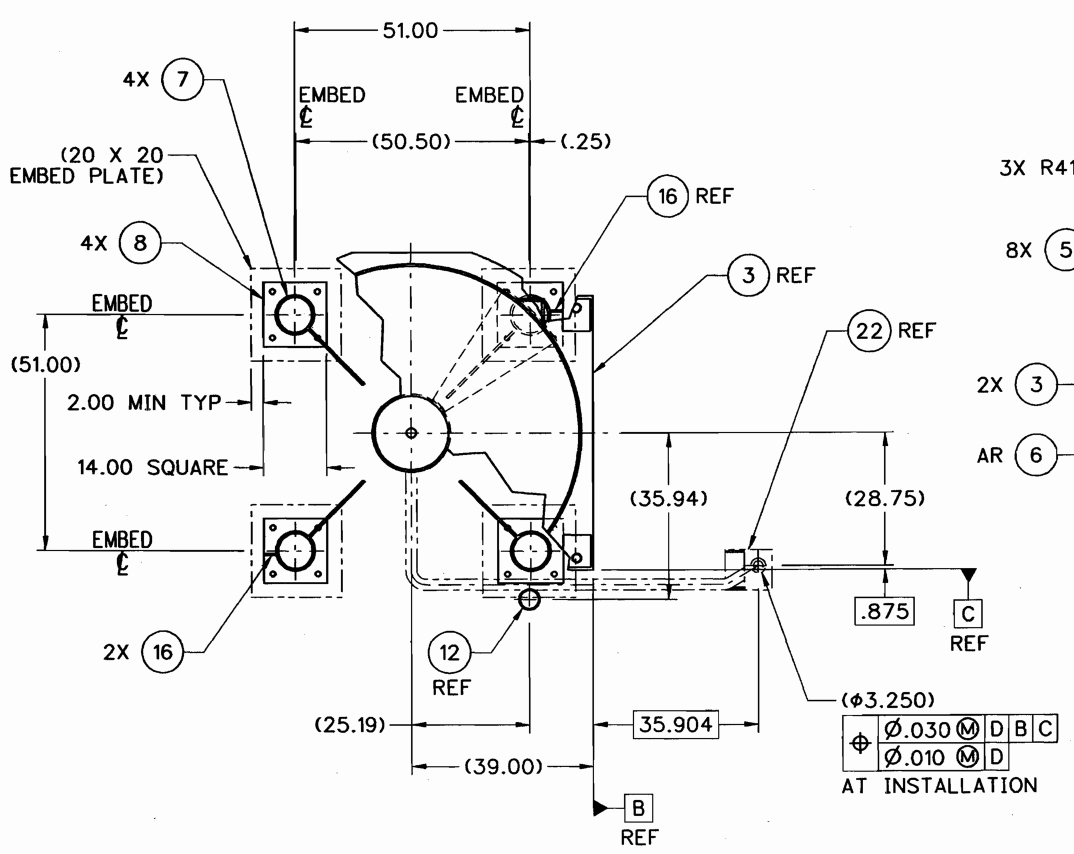

SECTION A-A

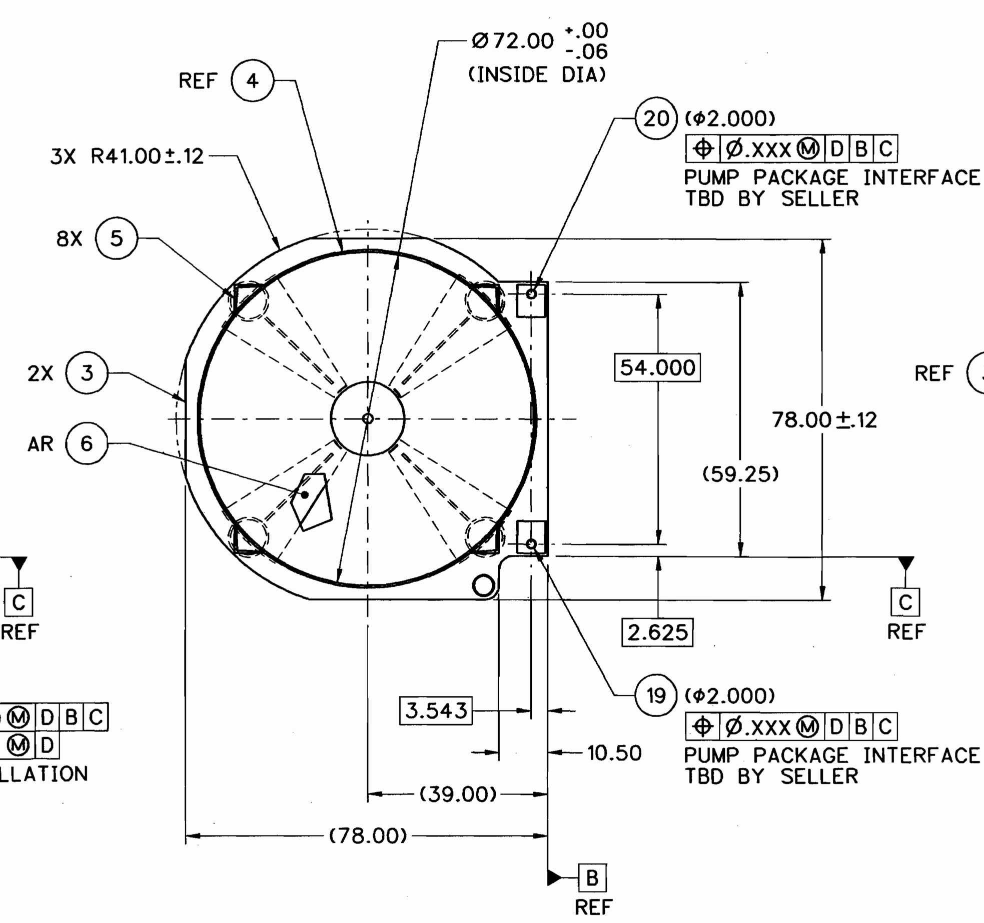

SECTION B-B

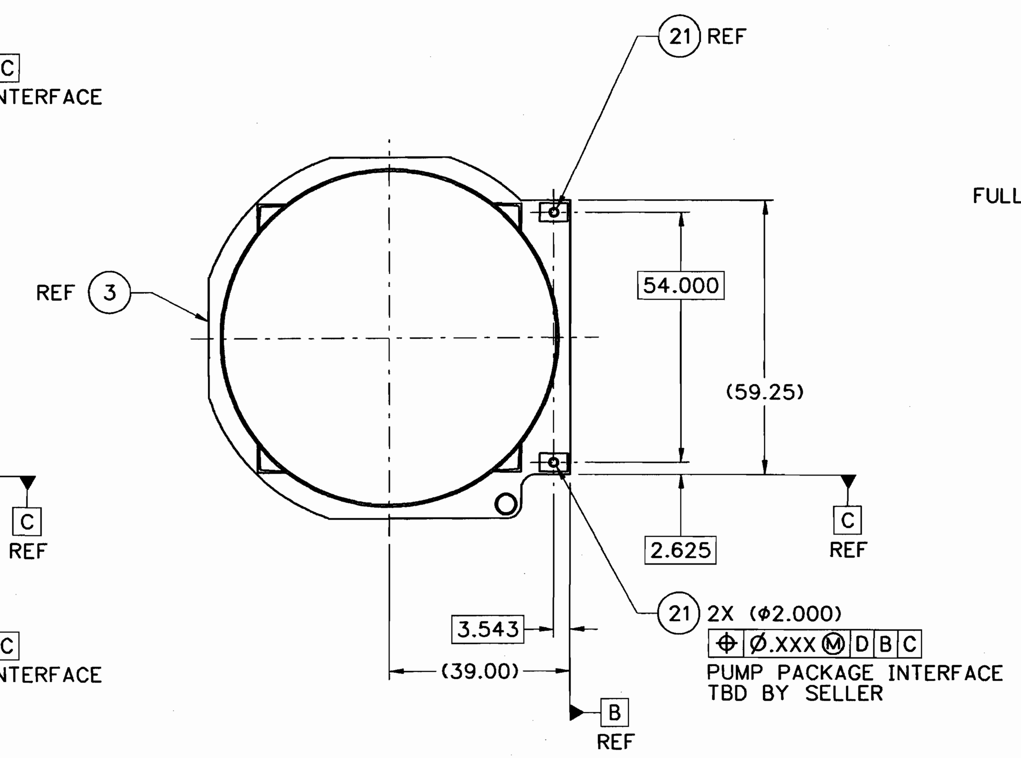

SECTION C-C

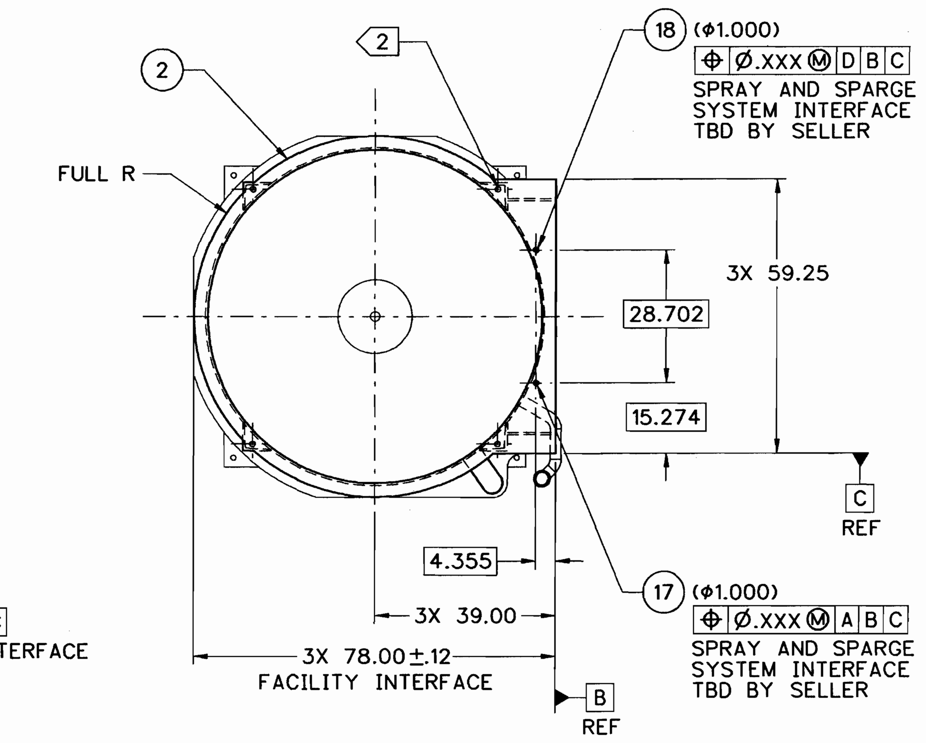

VIEW D-D

NOTES:

1. ALL DIMENSIONS ARE IN INCHES. MAX, MIN, ± TOLERANCED AND GEOMETRIC TOLERANCED DIMENSIONS INDICATE BOUNDING SIZES/ POSITIONS AND SHALL BE INCORPORATED INTO THE FINAL DESIGN PROVIDED BY THE SELLER. UNTOLERANCED DIMENSIONS ARE CONCEPTUAL ONLY

2. PROVIDE TANK LIFTING FEATURES FOR SETTING TANK IN PLACE. METHOD OF LIFTING SHALL NOT IMPEDE THE PERMANENT USE OF TANK WITH SPRAY AND SPARGE SYSTEM (ITEM 2 DWG 24590-HLW-MO-HSH-00071). (TAPPED HOLES FOR HOIST RINGS SHOWN).

3. PROVIDE 12"x12" NAMEPLATE WITH:
   PIN 24590-HLW-MT-HSH-TK-00001 (MELTER CAVE 1)
   PIN 24590-HLW-MT-HSH-TK-00002 (MELTER CAVE 2)
   MELTER CAVE DECONTAMINATION TANK
   DRY WEIGHT IN LBS

4. MARK CG ON SIDE OF TANK NOTED.

5. DELETED

6. DELETED

7. SELECTION OF COMMERCIAL COMPONENTS ON THIS DRAWING IS BECHTEL PROPOSAL ONLY. THE VENDOR SHALL BE RESPONSIBLE FOR FULL VALIDATION OF THE COMPONENTS SELECTED FOR THE CONTRACTED APPLICATION WHETHER IDENTICAL TO THE BECHTEL PROPOSAL OR OTHERWISE.

8. DELETED

9. THIS DRAWING TO BE READ IN CONJUNCTION WITH TECHNICAL SPECIFICATION 24590-WTP-3PS-HD00-TP001.

10. THIS DRAWING PROVIDED BASIC OUTLINES AND DESIGN OBJECTIVES TO CONTRACTED DESIGN OR FABRICATION SUPPLIER(S) AND SHALL NOT BE USED TO CONFIRM THE AS-BUILT WTP STRUCTURE, SYSTEM OR COMPONENT IDENTIFIED HEREIN. SEE VENDOR INFORMATION FOR FINAL CONFIGURATION PROVIDED IN CONFORMANCE TO PURCHASE ORDER 24590-CM-POA-HDYR-00001.

11. REMOTELY OPERATED JUMPER NOZZLE (ITEM 23) WILL BE PROVIDED TO SELLER FROM BUYER WITH PURCHASE ORDER. SEE SPECIFICATION 24590-WTP-GPG-ENG-022 FOR INFORMATION ON POSITIONING REMOTE JUMPER NOZZLES.

12. PIPING IS TO BE CONFIGURED TO MINIMIZE TRAPS THAT COULD COLLECT RADIOACTIVE CONTAMINATION.

13. QUANTITIES LISTED ARE FOR A SINGLE COMPONENT ASSEMBLY. TWO OF EACH NOTED ITEMS ARE REQUIRED, ONE FOR EACH MELTER CAVE AREA. SEE PLANT ITEM LISTING (ZONE C-2).

14. REVISION HISTORY:
    UPDATED ITEM 1 ADDING BOUNDING DIMENSIONS AND EQUIPMENT INTERFACES. VIEW D-D WAS SECTION D-D. REVISED SECTIONS E-E AND DETAIL 1. MODIFIED PARTS LIST. ADDED ITEMS 18 THRU 25. REVISED NOTES 1, 2, 3, 9, AND 11. DELETED NOTES 5, 6, AND 8. ADDED NOTES 12 THRU 14. REVISED REF DWGS. ADDED NOZZLE ID TABLE. ADDED PLANT ITEM NUMBER LIST.

JUMPER NOZZLE IDENTIFICATION TABLE

ITEM	DESCRIPTION	TYPE
1	TANK DRAIN	PROCESS JUMPER
18	PARTS WASHER DRAIN	FIELD WELDED JOINT

(SEE DWG 24590-HLW-MO-HSH-00071 FOR COMPLETE TABLE)

LEGEND

◇X - NOZZLE/CONNECTOR ID

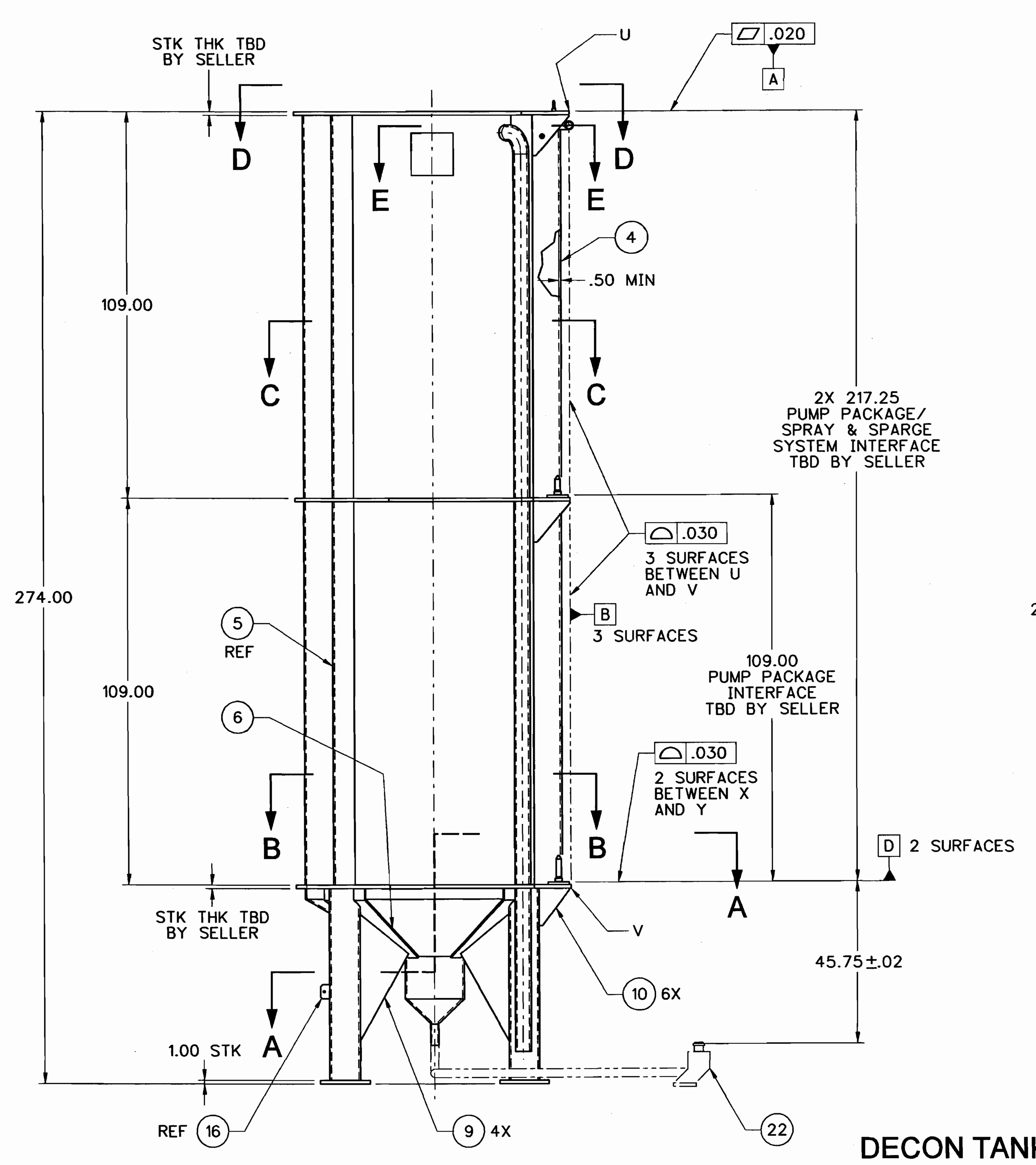

1 DECON TANK WELDMENT
REQD: 2

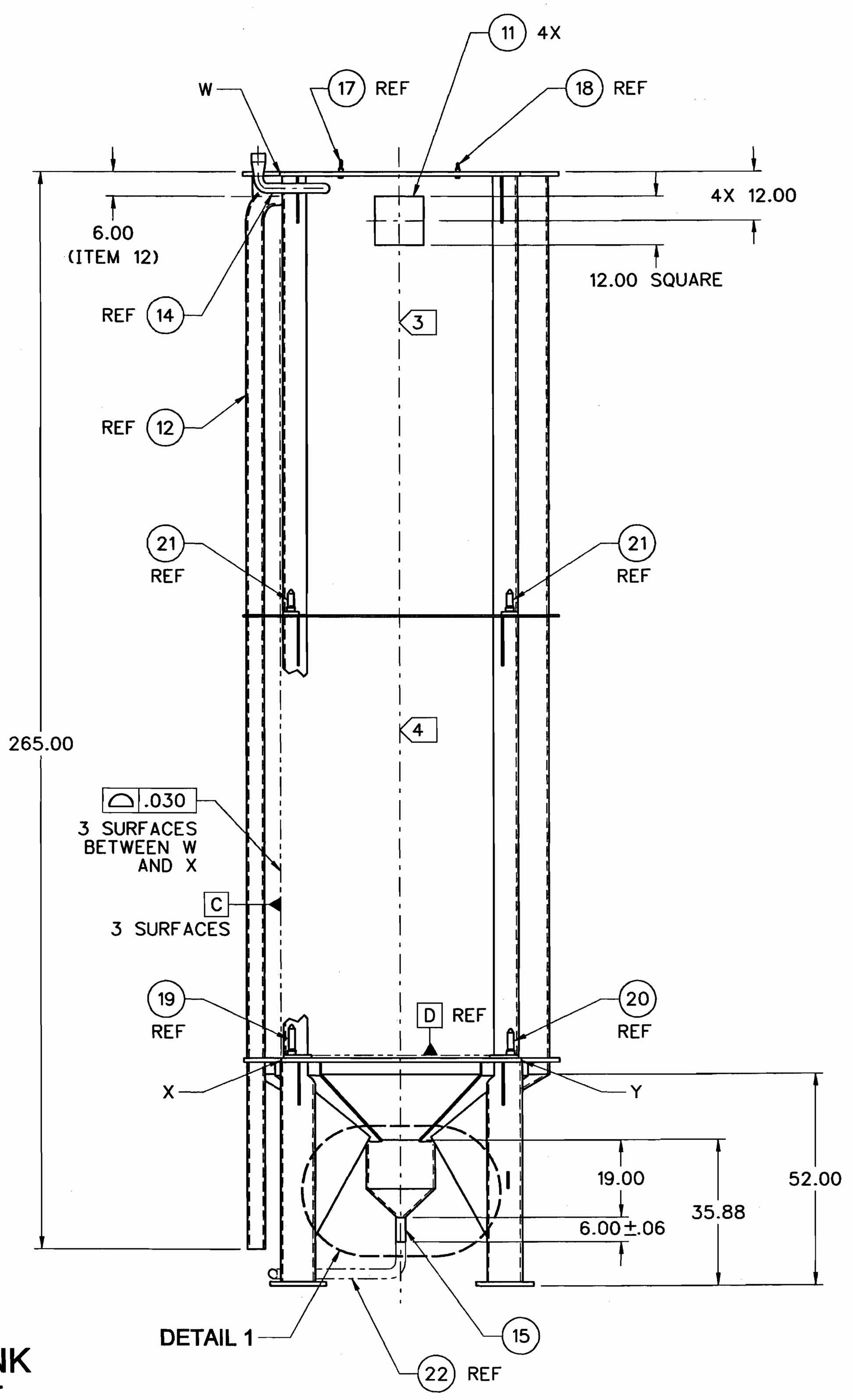

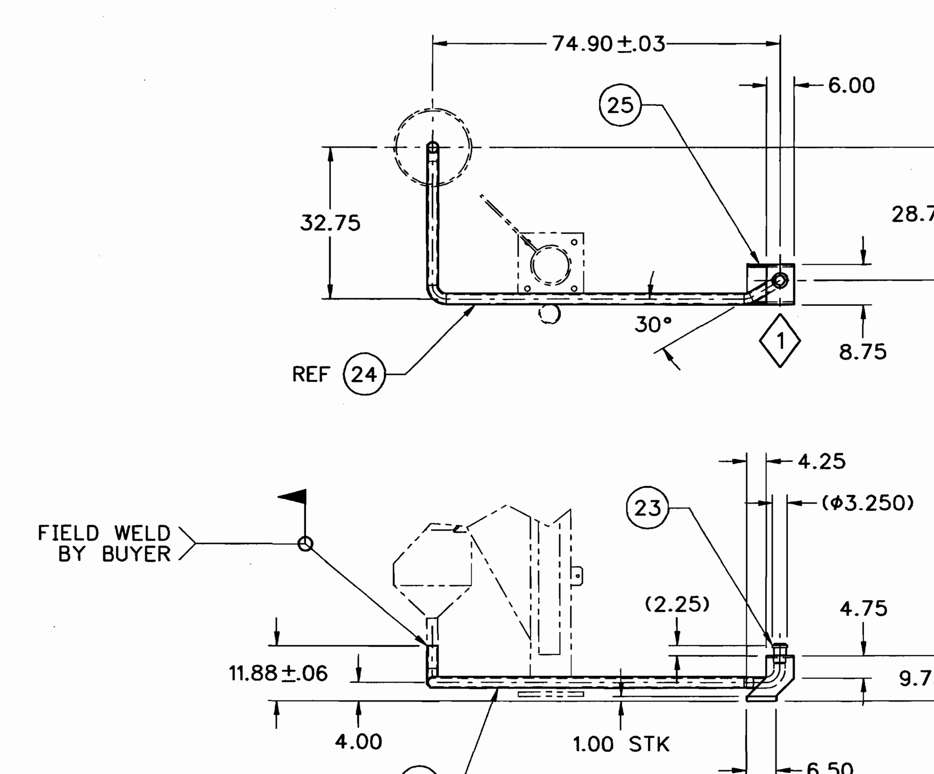

22 TANK DRAIN PIPING WELDMENT
REQD: 2

PLEASE NOTE THAT SOURCE, SPECIAL NUCLEAR AND BYPRODUCT MATERIALS, AS DEFINED IN THE ATOMIC ENERGY ACT OF 1954 (AEA), ARE REGULATED AT THE U.S. DEPARTMENT OF ENERGY (DOE) FACILITIES EXCLUSIVELY BY DOE ACTING PURSUANT TO ITS AEA AUTHORITY. DOE ASSERTS, THAT PURSUANT TO THE AEA, IT HAS SOLE AND EXCLUSIVE RESPONSIBILITY AND AUTHORITY TO REGULATE SOURCE, SPECIAL NUCLEAR, AND BYPRODUCT MATERIALS AT DOE-OWNED NUCLEAR FACILITIES. INFORMATION CONTAINED HEREIN ON RADIONUCLIDES IS PROVIDED FOR PROCESS DESCRIPTION PURPOSES ONLY.

MELTER CAVE 1 PLANT ITEM NUMBER
DECON TANK/SPRAY RING - 24590-HLW-MT-HSH-TK-00001

MELTER CAVE 2 PLANT ITEM NUMBER
DECON TANK/SPRAY RING - 24590-HLW-MT-HSH-TK-00002

REFERENCE DRAWINGS

DWG NO	TITLE
24590-HLW-MO-HSH-00071	HLW HSH DPD DECONTAMINATION TANK ASSEMBLY
24590-HLW-MO-HSH-00073	HLW HSH DPD DECON TANK SPRAY & SPARGE SYS
24590-HLW-MO-HSH-00074	HLW HSH DPD DECON TANK PUMP SUPPORT PKG
24590-HLW-MO-HSH-00076	HLW HSH DPD DECON TANK DISCHARGE FILTER
24590-HLW-MO-HSH-00082001	HLW HSH DPD DECON PIT EMBEDS
24590-HLW-MO-HSH-P0075	HLW HSH DECON TANK PROCESS FLOW DIAGRAM

CM
QUALITY DESIGNATOR

ISSUED BY RPP-WTP PDC

THIRD ANGLE PROJECTION

TOLERANCES

NO TOLERANCES ARE APPLIED TO DIMENSIONS, UNLESS NOTED.

REV	DESCRIPTION	ORG	CHKD	RVWD	APVD	DATE
1	ISSUED FOR PERMITTING USE COMPLETE REDRAW SEE NOTE 14	AC	JSL	SLW	DW	12/19/06
0	ISSUED FOR PERMITTING USE	ARR	RL	LH	DW	11/04/04

REVISION HISTORY

ISSUE STAMP	PROJECT No.	24590
	SITE	HANFORD
	AREA	200E
	BUILDING No.	30

	BY	DATE
ORIGINATOR	ALAN RATHMACHER	11/03/04
CHECKER	ROBERT LEYVA	11/03/04
APPROVER	DAVID J WILSEY	11/04/04
REVIEWER	LAWRNEL HARRISON	11/03/04

BECHTEL
RIVER PROTECTION PROJECT
WASTE TREATMENT PLANT
2435 STEVENS CENTER PLACE
RICHLAND, WA 99354

CONTRACT No: DE-AC27-01RV14136

HLW VITRIFICATION SYSTEM HSH DESIGN PROPOSAL DRAWING DECONTAMINATION TANK

CONTENT APPLICABLE TO ALARA? [X] YES [ ] NO
ADR NO. N/A REV:
SAFETY SCREEN REQUIRED? [ ] YES [X] NO E&NS INITIAL IF YES

SCALE: 1/2"=1'-0"
24590-HLW-M0-HSH-P0072
REV 1

SAFETY SCREEN IS REQUIRED FOR DRAWING TYPES IDENTIFIED IN 24590-WTP-GPP-SREG-002

'E' SIZE - 44x34
COMPUTER GENERATED - MANUAL CHANGES NOT PERMITTED

R10742157 12/13/2006 02:06:35 PM

PLOTTED BY: dljames
C:\Work\dms04235\HLWM0HSHP0072_0.dgn

FORM E_SDN.DGN 02/2003

R10306038

REMOTE-CHANGE HEPA FILTER HOUSING Data Sheet:

24590-HLW-MAD-HOP-P0010

MR No.	DELETED
Plant Item No.	24590-HLW-MK-HOP-HEPA-00001A
Rev No.	0

1	Project:	RPP-WTP	Bldg /Rm #	HLW / H104	Manufacturer:	*
2	Project No·	24590	Supporting Calculations	DELETED		
3	Site	DOE Hanford			Manufacturer Part No	
4	Safety Class	SDC	Associated Drawings	24590-HLW-M6-HOP-P0010		
5	Seismic Category	SC-I			Quantity Required	1
6	System No.	HOP	System Desc.	Melter Offgas System	Quality Level	QL-1
7	Description: HLW Vessel Vent / Offgas Melter #1- Primary "Active" Housing					
8						

ISSUED BY RPP-WTP PDC INN DATE 4/28/01

9 DESIGN CONDITIONS

10	Zone Design Temperature- Summer F	113		Maximum/ Normal Inlet Air Temperature F	200 F	161 F
11	Site Storage Conditions - Summer F	SEE SPEC	db	SEE SPEC	wb	
12	Housing Interior Chemical Exposure	DELETED				
13	Site Storage Conditions - Winter F	SEE SPEC		Radiological Dose Level per Hr		
14	Indoor Design Temperature - Winter F	59		Radiological Dose Level for Facility Life - 40years		7.2×10^8 Rem

15 PERFORMANCE RATING

16	Design Flow Rate (CFM)	4000		Leakage Rate @ Design Flow &		4 SCFM
17	Maximum Operating Pressure (in wc)	(-) 160"		Max Pressure (CFM)		
18	Maximum Design Pressure (in wc)	(-) 240"		Assembly Clean Pressure Drop with Filters (in wc)		3.5"
19	Total Filter Openings Required	3		Weight with HEPA Filters (pounds)		*
20	No. Filters per Bank	2		Weight without HEPA Filters (pounds)		*

21 CONSTRUCTION

22	Design Housing Manufacturer:	*	Design Housing Model Number·	*
23	Housing Construction Method	All Welded		
24	Housing Material	Type 304L Stainless Steel	Housing Material Gauge.	*
25	Top Panel Material.	Type 304L Stainless Steel	Top Panel Material Gauge:	*
26	Structural Frame Material:	Type 304L Stainless Steel	Structural Frame Features	*
27	Inlet Plenum Total Volume·	*	Outlet Plenum Total Volume	*
28	Inlet Position: (Top/Side)	Side	Outlet Position: (Top/Side)	Side
29	Inlet Inside Dimensions· (inches)	12" Nom.Diam.	Outlet Inside Dimensions: (inches)	12" Nom. Diam.
30		See Note 5.		See Note 5.
31	Inlet Connection Type:	Welded	Outlet Connection Type:	Welded
32	Inlet Flange Bolt Required.	N/A	Outlet Flange Bolts Required	N/A
33	Inlet Flange Bolt Size:	N/A	Outlet Flange Bolt Size:	N/A
34	Inlet Flange Bolt Material:	N/A	Outlet Flange Bolt Material	N/A
35	Inlet Flange Gasket Material:	N/A	Outlet Flange Gasket Material:	N/A
36	Paint and Finish Material.	N/A	Paint and Finish Material Minimum Thickness:	N/A

37 HOUSING ACCESSORIES

38	Accessory Provided	Yes	No	Accessory Information	
39	Test w/Inlet Isolation Damper:	X		Damper Provided By:	Vendor
40	See Note 7			Inlet Isolation Damper Type.	Gate
41				Inlet Isolation Damper Size·	12" Nominal Diameter
42	Inlet Transition Ductwork:	X		Inlet Transition Ductwork	DELETED
43				Overall Length: (inches)	
44				Inlet Transition Smallest	12" Nominal Diameter
45				Inside Dimension· (inches)	See Note 5.
46				Inlet Transition Largest	12" Nominal Diameter
47				Inside Dimension (inches)	See Note 5.
48	Inlet Aerosol Test Port Criteria.	X		Challenge Aerosol Connection Type·	*
49	See Note 8			Challenge Aerosol Connection Size.	*
50				Challenge Aerosol Connection Quantity.	*
51					
52					

REMOTE-CHANGE HEPA FILTER HOUSING Data Sheet:

24590-HLW-MAD-HOP-P0010

MR No.	DELETED
Plant Item No	24590-HLW-MK-HOP-HEPA-00001A
Rev No	0

1	Project.	RPP-WTP	Bldg./Rm #	HLW / H104	Manufacturer:	*
2	Project No:	24590	Supporting Calculations	DELETED		
3	Site:	DOE Hanford			Manufacturer Part No:	*
4	Safety Class	SDC	Associated Drawings	24590-HLW-M6-HOP-P0010		
5	Seismic Category	SC-I			Quantity Required	1
6	System No	HOP	System Desc.	Melter Offgas System	Quality Level	QL-1
7	Description:	HLW Vessel Vent / Offgas Melter #1- Primary "Active" Housing				
8						

9 HOUSING ACCESSORIES (continued)

10	Accessory Provided	Yes	No	Total Number of Viewing Ports Required:	N/A	
11	Inlet Viewing Ports		X	Inlet Viewing Port Type.	N/A	
12				Inlet Viewing Port Locations:	N/A	
13				Inlet Viewing Port	N/A	Width
14				Dimensions: (inches)	N/A	Length
15	Internal Fire Suppression:		X	Fire Suppression System Description.	N/A	
16				Accessory Information	1 per bank	
17	Vacuum-Relief Vent Assembly:	X		Number Required	*	
18				Vacuum-Relief Vent Assembly Setpoint.	*	
19				Vacuum-Relief Vent Assembly Manufacturer:	*	
20				Vacuum-Relief Vent Model Number:	N/A	
21	Test w/Outlet Isolation Damper		X	Damper Provided By:	N/A	
22				Outlet Isolation Damper Type:	N/A	
23				Outlet Isolation Damper Size:	12" Nominal Diameter	
24	Outlet Transition Ductwork:	X		Outlet Transition Ductwork Overall Length. (inches)	DELETED	
25						
26				Outlet Transition Smallest Inside Dimension:(inches)	12" Nominal Diameter	
27						
28				Outlet Transition Largest Inside Dimension: (inches)	12" Nominal Diameter	
29						
30	Outlet Aerosol Test Port Criteria:	X		Challenge Aerosol Connection Type:	*	
31				Challenge Aerosol Connection Size:	*	
32				Challenge Aerosol Connection Quantity:	*	
33	Outlet Viewing Ports:		X	Total Number of Viewing Ports Required:	N/A	
34				Outlet Viewing Port Type:	N/A	
35				Outlet Viewing Port Locations:	N/A	
36				Outlet Viewing Port	N/A	Width
37				Dimensions: (inches)	N/A	Length
38	Differential Pressure Taps:	X		Differential Pressure Tap Size: (inches)	1/2-inch SW	
39	Drain Connection:	See Note 9		Drain Connection Size: (inches)	N/A	
40	Drain Connection Valve:		X	Drain Connection Valve Size: (inches)	1 1/2"	
41				PVC Safe Change Bag Type:	N/A	

42 UTILITY REQUIREMENTS

43	Electrical: (volts/phase/hertz)	N/A
44	Compressed Air:	N/A
45	Intrumentation Taps:	3/4-inch SW
46	Pressure/Leak Test Ports	*
47	Air/Aerosol Mixing Test Ports	*
48		
49		
50		
51		
52		
53		

REMOTE-CHANGE HEPA FILTER HOUSING Data Sheet:

24590-HLW-MAD-HOP-P0010

MR No.	DELETED
Plant Item No.	24590-HLW-MK-HOP-HEPA-00001A
Rev No	0

1	Project:	RPP-WTP	Bldg./Rm #	HLW / H104	Manufacturer	*
2	Project No·	24590	Supporting Calculations	DELETED		
3	Site:	DOE Hanford			Manufacturer Part No·	*
4	Safety Class	SDC	Associated Drawings	24590-HLW-M6-HOP-P0010		
5	Seismic Category	SC-I			Quantity Required	1
6	System No.	HOP	System Desc	Melter Offgas System	Quality Level	QL-1
7	Description: HLW Vessel Vent / Offgas Melter #1- Primary "Active" Housing					
8						

9 Remarks: * Data to be provided by Vendor.

10 **Notes:**

11 **1.) Vendor to fill in data with (*) asterisk.**

12 **2.) DELETED.**

13 **3.) DELETED.**

14 **4.) DELETED.**

15 **5.) Inlet and Outlet I.D.'s to match I.D. of 12" Sch 40S Stainless Steel Pipe.**

16 **6.) N/A denotes "Not Applicable".**

17 **7.) During Shop Test, Contractor may use a temporary valve or a blank-off plate.**

18 **8.) Aerosol test ports include injection and sampling at each stage.**

19 **9.) 1 1/2" plugged drain at low point in the plenum.**

20 **10.) Sealing materials and mechanism shall comply with ASME AG-1.**

DANIEL JOSEPH CRAGIN
STATE OF WASHINGTON
34535
REGISTERED PROFESSIONAL ENGINEER

4-21-04

EXPIRES: 9-10-04

This document contains 3 pages.

Please note that source, special nuclear and byproduct materials, as defined in the Atomic Energy Act of 1954 (AEA), are regulated at the U.S. Department of Energy (DOE) facilities exclusively by DOE acting pursuant to its AEA authority. DOE asserts, that pursuant to the AEA, it has sole and exclusive responsibility and authority to regulate source, special nuclear, and byproduct materials at DOE-owned nuclear facilities. Information contained herein on radionuclides is provided for process description purposes only.

Rev	Date	Description	Originator	Checker	Approver
0	4/21/04	Issued for Permitting Use	Dale E. Green	[illegible]	[illegible]

R10306039

REMOTE-CHANGE HEPA FILTER HOUSING Data Sheet:

24590-HLW-MAD-HOP-P0011

MR No	DELETED
Plant Item No.	24590-HLW-MK-HOP-HEPA-00002A
Rev No.	0

1	Project:	RPP-WTP	Bldg./Rm #	HLW / H104	Manufacturer:	*
2	Project No:	24590	Supporting Calculations	DELETED		
3	Site:	DOE Hanford			Manufacturer	*
4	Safety Class	SDC	Associated Drawings	24590-HLW-M6-HOP-P0010	Part No	
5	Seismic Category	SC-I			Quantity Required	
6	System No.	HOP	System Desc.	Melter Offgas System	Quality Level	QL-1
7	Description:	HLW Vessel Vent / Offgas Melter #1- Secondary "Active" Housing				
8						

ISSUED BY RPP-WTP PDC INIT DATE

9 DESIGN CONDITIONS

10	Zone Design Temperature- Summer F	113		Maximum/ Normal Inlet Air Temperature F	200 F	161 F
11	Site Storage Conditions - Summer F	SEE SPEC	db	SEE SPEC wb		
12	Housing Interior Chemical Exposure	DELETED				
13	Site Storage Conditions - Winter F	SEE SPEC		Radiological Dose Level per Hr		
14	Indoor Design Temperature - Winter F	59		Radiological Dose Level for Facility Life - 40years		7.2×10^8 Rem

15 PERFORMANCE RATING

16	Design Flow Rate (CFM)	4000		Leakage Rate @ Design Flow &		4 SCFM
17	Maximum Operating Pressure (in wc)	(-) 160"		Max Pressure (CFM)		
18	Maximum Design Pressure (in wc)	(-) 240"		Assembly Clean Pressure Drop with Filters (in wc)		3.5"
19	Total Filter Openings Required	3		Weight with HEPA Filters (pounds)		*
20	No. Filters per Bank	2		Weight without HEPA Filters (pounds)		*

21 CONSTRUCTION

22	Design Housing Manufacturer:	*	Design Housing Model Number:	*
23	Housing Construction Method.	All Welded		
24	Housing Material.	Type 304L Stainless Steel	Housing Material Gauge:	*
25	Top Panel Material	Type 304L Stainless Steel	Top Panel Material Gauge.	*
26	Structural Frame Material:	Type 304L Stainless Steel	Structural Frame Features:	*
27	Inlet Plenum Total Volume	*	Outlet Plenum Total Volume	*
28	Inlet Position: (Top/Side)	Side	Outlet Position: (Top/Side)	Side
29	Inlet Inside Dimensions: (inches)	12" Nom.Diam.	Outlet Inside Dimensions (inches)	12" Nom. Diam.
30		See Note 5.		See Note 5.
31	Inlet Connection Type:	Welded	Outlet Connection Type:	Welded
32	Inlet Flange Bolt Required:	N/A	Outlet Flange Bolts Required:	N/A
33	Inlet Flange Bolt Size:	N/A	Outlet Flange Bolt Size:	N/A
34	Inlet Flange Bolt Material:	N/A	Outlet Flange Bolt Material:	N/A
35	Inlet Flange Gasket Material:	N/A	Outlet Flange Gasket Material:	N/A
36	Paint and Finish Material:	N/A	Paint and Finish Material Minimum Thickness	N/A

37 HOUSING ACCESSORIES

38	Accessory Provided	Yes	No	Accessory Information	
39	Test w/Inlet Isolation Damper:	X		Damper Provided By	Vendor
40	See Note 7			Inlet Isolation Damper Type:	Gate
41				Inlet Isolation Damper Size	12" Nominal Diameter
42	Inlet Transition Ductwork:	X		Inlet Transition Ductwork	DELETED
43				Overall Length: (inches)	
44				Inlet Transition Smallest	12" Nominal Diameter
45				Inside Dimension: (inches)	See Note 5.
46				Inlet Transition Largest	12" Nominal Diameter
47				Inside Dimension: (inches)	See Note 5.
48	Inlet Aerosol Test Port Criteria:	X		Challenge Aerosol Connection Type.	*
49	See Note 8			Challenge Aerosol Connection Size.	*
50				Challenge Aerosol Connection Quantity	*
51					
52					

REMOTE-CHANGE HEPA FILTER HOUSING Data Sheet:

24590-HLW-MAD-HOP-P0011

MR No.	DELETED
Plant Item No	24590-HLW-MK-HOP-HEPA-00002A
Rev No.	0

1	Project:	RPP-WTP	Bldg./Rm #	HLW / H104	Manufacturer:	*
2	Project No:	24590	Supporting Calculations	DELETED		
3	Site:	DOE Hanford			Manufacturer Part No:	*
4	Safety Class	SDC	Associated Drawings	24590-HLW-M6-HOP-P0010		
5	Seismic Category	SC-I			Quantity Required	1
6	System No.	HOP	System Desc.	Melter Offgas System	Quality Level	QL-1
7	Description: HLW Vessel Vent / Offgas Melter #1- Secondary "Active" Housing					
8						

9 HOUSING ACCESSORIES (continued)

10	**Accessory Provided**	**Yes**	**No**	Total Number of Viewing Ports Required:	N/A	
11	Inlet Viewing Ports		X	Inlet Viewing Port Type:	N/A	
12				Inlet Viewing Port Locations:	N/A	
13				Inlet Viewing Port	N/A	Width
14				Dimensions: (inches)	N/A	Length
15	Internal Fire Suppression:		X	Fire Suppression System Description:	N/A	
16				Accessory Information	1 per bank	
17	Vacuum-Relief Vent Assembly:	X		Number Required:	*	
18				Vacuum-Relief Vent Assembly Setpoint:	*	
19				Vacuum-Relief Vent Assembly Manufacturer:	*	
20				Vacuum-Relief Vent Model Number:	N/A	
21	Test w/Outlet Isolation Damper:		X	Damper Provided By.	N/A	
22				Outlet Isolation Damper Type	N/A	
23				Outlet Isolation Damper Size:	12" Nominal Diameter	
24	Outlet Transition Ductwork:	X		Outlet Transition Ductwork Overall Length: (inches)	DELETED	
25						
26				Outlet Transition Smallest Inside Dimension:(inches)	12" Nominal Diameter	
27						
28				Outlet Transition Largest Inside Dimension: (inches)	12" Nominal Diameter	
29						
30	Outlet Aerosol Test Port Criteria	X		Challenge Aerosol Connection Type	*	
31				Challenge Aerosol Connection Size:	*	
32				Challenge Aerosol Connection Quantity.	*	
33	Outlet Viewing Ports:		X	Total Number of Viewing Ports Required:	N/A	
34				Outlet Viewing Port Type:	N/A	
35				Outlet Viewing Port Locations:	N/A	
36				Outlet Viewing Port	N/A	Width
37				Dimensions: (inches)	N/A	Length
38	Differential Pressure Taps:	X		Differential Pressure Tap Size. (inches)	1/2-inch SW	
39	Drain Connection:	See Note 9		Drain Connection Size: (inches)	N/A	
40	Drain Connection Valve:		X	Drain Connection Valve Size: (inches)	1 1/2"	
41				PVC Safe Change Bag Type:	N/A	

42 UTILITY REQUIREMENTS

43	Electrical: (volts/phase/hertz)	N/A
44	Compressed Air:	N/A
45	Intrumentation Taps:	3/4-inch SW
46	Pressure/Leak Test Ports	*
47	Air/Aerosol Mixing Test Ports	*
48		
49		
50		
51		
52		
53		

REMOTE-CHANGE HEPA FILTER HOUSING Data Sheet:

24590-HLW-MAD-HOP-P0011

MR No.	DELETED
Plant Item No.	24590-HLW-MK-HOP-HEPA-00002A
Rev No	0

1	Project:	RPP-WTP	Bldg /Rm #	HLW / H104	Manufacturer: *	
2	Project No:	24590	Supporting Calculations	DELETED		
3	Site:	DOE Hanford			Manufacturer Part No: *	
4	Safety Class	SDC	Associated Drawings	24590-HLW-M6-HOP-P0010		
5	Seismic Category	SC-I			Quantity Required	1
6	System No	HOP	System Desc.	Melter Offgas System	Quality Level	QL-1
7	Description: HLW Vessel Vent / Offgas Melter #1- Secondary "Active" Housing					
8						

9 Remarks: * Data to be provided by Vendor.

10 **Notes:**

11 **1.) Vendor to fill in data with (*) asterisk.**

12 **2.) DELETED.**

13 **3.) DELETED.**

14 **4.) DELETED.**

15 **5.) Inlet and Outlet I.D.'s to match I.D. of 12" Sch 40S Stainless Steel Pipe.**

16 **6.) N/A denotes "Not Applicable".**

17 **7.) During Shop Test, Contractor may use a temporary valve or a blank-off plate.**

18 **8.) Aerosol test ports include injection and sampling at each stage.**

19 **9.) 1 1/2" plugged drain at low point in the plenum.**

20 **10.) Sealing materials and mechanism shall comply with ASME AG-1.**

DANIEL JOSEPH CRAGIN
STATE OF WASHINGTON
34536
REGISTERED PROFESSIONAL ENGINEER

4-21-04

EXPIRES: 9-10-04

This document contains 3 pages.

Please note that source, special nuclear and byproduct materials, as defined in the Atomic Energy Act of 1954 (AEA), are regulated at the U.S. Department of Energy (DOE) facilities exclusively by DOE acting pursuant to its AEA authority. DOE asserts, that pursuant to the AEA, it has sole and exclusive responsibility and authority to regulate source, special nuclear, and byproduct materials at DOE-owned nuclear facilities. Information contained herein on radionuclides is provided for process description purposes only.

50						
51						
52	0	4/21/04	Issued for Permitting Use	Dale E. Green	M. Ordona	
53	Rev	Date	Description	Originator	Checker	Approver

REMOTE-CHANGE HEPA FILTER HOUSING Data Sheet:

24590-HLW-MAD-HOP-P0012

R10306040

MR No.

DELETED

Plant Item No	Rev No
24590-HLW-MK-HOP-HEPA-00001B	0

ISSUED BY RPP-WTP PDC INIT DATE

1	Project:	RPP-WTP	Bldg./Rm #	HLW / H104	Manufacturer:	
2	Project No:	24590	Supporting Calculations	DELETED		
3	Site:	DOE Hanford			Manufacturer Part No:	
4	Safety Class	SDC	Associated Drawings	24590-HLW-M6-HOP-P0010		
5	Seismic Category	SC-I			Quantity Required	1
6	System No.	HOP	System Desc	Melter Offgas System	Quality Level	QL-1
7	Description: HLW Vessel Vent / Offgas Melter #1- Primary "Standby" Housing					
8						

9 DESIGN CONDITIONS

10	Zone Design Temperature- Summer F	113		Maximum/ Normal Inlet Air Temperature F	200 F	161 F
11	Site Storage Conditions - Summer F	SEE SPEC	db	SEE SPEC	wb	
12	Housing Interior Chemical Exposure	DELETED				
13	Site Storage Conditions - Winter F	SEE SPEC		Radiological Dose Level per Hr		
14	Indoor Design Temperature - Winter F	59		Radiological Dose Level for Facility Life - 40years		7.2×10^8 Rem

15 PERFORMANCE RATING

16	Design Flow Rate (CFM)	4000		Leakage Rate @ Design Flow &		4 SCFM
17	Maximum Operating Pressure (in wc)	(-) 160"		Max Pressure (CFM)		
18	Maximum Design Pressure (in wc)	(-) 240"		Assembly Clean Pressure Drop with Filters (in wc)		3.5"
19	Total Filter Openings Required	3		Weight with HEPA Filters (pounds)		*
20	No. Filters per Bank	2		Weight without HEPA Filters (pounds)		*

21 CONSTRUCTION

22	Design Housing Manufacturer:	*	Design Housing Model Number.	*
23	Housing Construction Method:	All Welded		
24	Housing Material:	Type 304L Stainless Steel	Housing Material Gauge:	*
25	Top Panel Material	Type 304L Stainless Steel	Top Panel Material Gauge:	*
26	Structural Frame Material:	Type 304L Stainless Steel	Structural Frame Features:	*
27	Inlet Plenum Total Volume	*	Outlet Plenum Total Volume	*
28	Inlet Position: (Top/Side)	Side	Outlet Position: (Top/Side)	Side
29	Inlet Inside Dimensions: (inches)	12" Nom.Diam.	Outlet Inside Dimensions: (inches)	12" Nom. Diam.
30		See Note 5.		See Note 5.
31	Inlet Connection Type:	Welded	Outlet Connection Type:	Welded
32	Inlet Flange Bolt Required:	N/A	Outlet Flange Bolts Required:	N/A
33	Inlet Flange Bolt Size.	N/A	Outlet Flange Bolt Size:	N/A
34	Inlet Flange Bolt Material:	N/A	Outlet Flange Bolt Material:	N/A
35	Inlet Flange Gasket Material	N/A	Outlet Flange Gasket Material:	N/A
36	Paint and Finish Material:	N/A	Paint and Finish Material Minimum Thickness:	N/A

37 HOUSING ACCESSORIES

38	Accessory Provided	Yes	No	Accessory Information	
39	Test w/Inlet Isolation Damper:	X		Damper Provided By:	Vendor
40	See Note 7			Inlet Isolation Damper Type:	Gate
41				Inlet Isolation Damper Size:	12" Nominal Diameter
42	Inlet Transition Ductwork:	X		Inlet Transition Ductwork	DELETED
43				Overall Length: (inches)	
44				Inlet Transition Smallest	12" Nominal Diameter
45				Inside Dimension: (inches)	See Note 5.
46				Inlet Transition Largest	12" Nominal Diameter
47				Inside Dimension: (inches)	See Note 5.
48	Inlet Aerosol Test Port Criteria:	X		Challenge Aerosol Connection Type:	*
49	See Note 8			Challenge Aerosol Connection Size:	*
50				Challenge Aerosol Connection Quantity:	*
51					
52					

REMOTE-CHANGE HEPA FILTER HOUSING Data Sheet:

24590-HLW-MAD-HOP-P0012

MR No.	DELETED
Plant Item No	24590-HLW-MK-HOP-HEPA-00001B
Rev No.	0

1	Project.	RPP-WTP	Bldg./Rm #	HLW / H104	Manufacturer:	*
2	Project No.	24590	Supporting Calculations	DELETED		
3	Site:	DOE Hanford			Manufacturer Part No:	*
4	Safety Class	SDC	Associated Drawings	24590-HLW-M6-HOP-P0010		
5	Seismic Category	SC-I			Quantity Required	1
6	System No.	HOP	System Desc.	Melter Offgas System	Quality Level	QL-1
7	Description: HLW Vessel Vent / Offgas Melter #1- Primary "Standby" Housing					
8						

9 HOUSING ACCESSORIES (continued)

10	**Accessory Provided**	**Yes**	**No**	Total Number of Viewing Ports Required.	N/A	
11	Inlet Viewing Ports		X	Inlet Viewing Port Type:	N/A	
12				Inlet Viewing Port Locations:	N/A	
13				Inlet Viewing Port	N/A	Width
14				Dimensions: (inches)	N/A	Length
15	Internal Fire Suppression.		X	Fire Suppression System Description:	N/A	
16				Accessory Information	1 per bank	
17	Vacuum-Relief Vent Assembly:	X		Number Required:	*	
18				Vacuum-Relief Vent Assembly Setpoint:	*	
19				Vacuum-Relief Vent Assembly Manufacturer:	*	
20				Vacuum-Relief Vent Model Number.	N/A	
21	Test w/Outlet Isolation Damper:		X	Damper Provided By:	N/A	
22				Outlet Isolation Damper Type	N/A	
23				Outlet Isolation Damper Size:	12" Nominal Diameter	
24	Outlet Transition Ductwork:	X		Outlet Transition Ductwork Overall Length: (inches)	DELETED	
25						
26				Outlet Transition Smallest Inside Dimension:(inches)	12" Nominal Diameter	
27						
28				Outlet Transition Largest Inside Dimension: (inches)	12" Nominal Diameter	
29						
30	Outlet Aerosol Test Port Criteria:	X		Challenge Aerosol Connection Type:	*	
31				Challenge Aerosol Connection Size:	*	
32				Challenge Aerosol Connection Quantity.	*	
33	Outlet Viewing Ports:		X	Total Number of Viewing Ports Required:	N/A	
34				Outlet Viewing Port Type:	N/A	
35				Outlet Viewing Port Locations.	N/A	
36				Outlet Viewing Port	N/A	Width
37				Dimensions: (inches)	N/A	Length
38	Differential Pressure Taps:	X		Differential Pressure Tap Size: (inches)	1/2-inch SW	
39	Drain Connection:	See Note 9		Drain Connection Size: (inches)	N/A	
40	Drain Connection Valve:		X	Drain Connection Valve Size. (inches)	1 1/2"	
41				PVC Safe Change Bag Type.	N/A	

42 UTILITY REQUIREMENTS

43	Electrical: (volts/phase/hertz)	N/A
44	Compressed Air:	N/A
45	Intrumentation Taps:	3/4-inch SW
46	Pressure/Leak Test Ports	*
47	Air/Aerosol Mixing Test Ports	*
48		
49		
50		
51		
52		
53		

REMOTE-CHANGE HEPA FILTER HOUSING Data Sheet:

24590-HLW-MAD-HOP-P0012

MR No.	DELETED
Plant Item No.	24590-HLW-MK-HOP-HEPA-00001B
Rev No	0

1	Project:	RPP-WTP	Bldg./Rm #	HLW / H104	Manufacturer.	*
2	Project No:	24590	Supporting Calculations	DELETED		
3	Site:	DOE Hanford			Manufacturer Part No:	*
4	Safety Class	SDC	Associated Drawings	24590-HLW-M6-HOP-P0010		
5	Seismic Category	SC-I			Quantity Required	1
6	System No	HOP	System Desc.	Melter Offgas System	Quality Level	QL-1
7	Description. HLW Vessel Vent / Offgas Melter #1- Primary "Standby" Housing					
8						

9 Remarks: * Data to be provided by Vendor.

10 **Notes:**

11 **1.) Vendor to fill in data with (*) asterisk.**

12 **2.) DELETED.**

13 **3.) DELETED.**

14 **4.) DELETED.**

15 **5.) Inlet and Outlet I.D.'s to match I.D. of 12" Sch 40S Stainless Steel Pipe.**

16 **6.) N/A denotes "Not Applicable".**

17 **7.) During Shop Test, Contractor may use a temporary valve or a blank-off plate.**

18 **8.) Aerosol test ports include injection and sampling at each stage.**

19 **9.) 1 1/2" plugged drain at low point in the plenum.**

20 **10.) Sealing materials and mechanism shall comply with ASME AG-1.**

DANIEL JOSEPH CRAGIN
STATE OF WASHINGTON
34835
REGISTERED
PROFESSIONAL ENGINEER

4-21-04

EXPIRES: 9-10-04

This document contains 3 pages.

Please note that source, special nuclear and byproduct materials, as defined in the Atomic Energy Act of 1954 (AEA), are regulated at the U.S. Department of Energy (DOE) facilities exclusively by DOE acting pursuant to its AEA authority. DOE asserts, that pursuant to the AEA, it has sole and exclusive responsibility and authority to regulate source, special nuclear, and byproduct materials at DOE-owned nuclear facilities. Information contained herein on radionuclides is provided for process description purposes only.

Rev	Date	Description	Originator	Checker	Approver
0	4/21/04	Issued for Permitting Use	Dale E. Green	M. Ordna	

REMOTE-CHANGE HEPA FILTER HOUSING Data Sheet:

24590-HLW-MAD-HOP-P0013

MR No. R10306041

DELETED

Plant Item No	Rev No
24590-HLW-MK-HOP-HEPA-00002B	0

ISSUED BY RPP-WTP PDC DATE

1	Project.	RPP-WTP	Bldg /Rm #	HLW / H104	Manufacturer	
2	Project No.	24590	Supporting Calculations	DELETED		
3	Site:	DOE Hanford			Manufacturer Part No:	
4	Safety Class	SDC	Associated Drawings	24590-HLW-M6-HOP-P0010		
5	Seismic Category	SC-I			Quantity Required	1
6	System No.	HOP	System Desc.	Melter Offgas System	Quality Level	QL-1
7	Description: HLW Vessel Vent / Offgas Melter #1- Secondary "Standby" Housing					
8						

9 DESIGN CONDITIONS

10	Zone Design Temperature- Summer F	113		Maximum/ Normal Inlet Air Temperature F	200 F	161 F
11	Site Storage Conditions - Summer F	SEE SPEC	db	SEE SPEC wb		
12	Housing Interior Chemical Exposure	DELETED				
13	Site Storage Conditions - Winter F	SEE SPEC		Radiological Dose Level per Hr		
14	Indoor Design Temperature - Winter F	59		Radiological Dose Level for Facility Life - 40years		7.2×10^8 Rem

15 PERFORMANCE RATING

16	Design Flow Rate (CFM)	4000		Leakage Rate @ Design Flow &		4 SCFM
17	Maximum Operating Pressure (in wc)	(-) 160"		Max Pressure (CFM)		
18	Maximum Design Pressure (in wc)	(-) 240"		Assembly Clean Pressure Drop with Filters (in wc)		3.5"
19	Total Filter Openings Required	3		Weight with HEPA Filters (pounds)		*
20	No. Filters per Bank	2		Weight without HEPA Filters (pounds)		*

21 CONSTRUCTION

22	Design Housing Manufacturer:	*	Design Housing Model Number:	*
23	Housing Construction Method	All Welded		
24	Housing Material:	Type 304L Stainless Steel	Housing Material Gauge:	*
25	Top Panel Material:	Type 304L Stainless Steel	Top Panel Material Gauge:	*
26	Structural Frame Material:	Type 304L Stainless Steel	Structural Frame Features:	*
27	Inlet Plenum Total Volume.	*	Outlet Plenum Total Volume	*
28	Inlet Position: (Top/Side)	Side	Outlet Position: (Top/Side)	Side
29	Inlet Inside Dimensions: (inches)	12" Nom.Diam.	Outlet Inside Dimensions: (inches)	12" Nom. Diam.
30		See Note 5.		See Note 5.
31	Inlet Connection Type:	Welded	Outlet Connection Type:	Welded
32	Inlet Flange Bolt Required:	N/A	Outlet Flange Bolts Required	N/A
33	Inlet Flange Bolt Size:	N/A	Outlet Flange Bolt Size:	N/A
34	Inlet Flange Bolt Material:	N/A	Outlet Flange Bolt Material.	N/A
35	Inlet Flange Gasket Material:	N/A	Outlet Flange Gasket Material:	N/A
36	Paint and Finish Material.	N/A	Paint and Finish Material Minimum Thickness:	N/A

37 HOUSING ACCESSORIES

38	Accessory Provided	Yes	No	Accessory Information	
39	Test w/Inlet Isolation Damper:	X		Damper Provided By.	Vendor
40	See Note 7			Inlet Isolation Damper Type:	Gate
41				Inlet Isolation Damper Size	12" Nominal Diameter
42	Inlet Transition Ductwork.	X		Inlet Transition Ductwork	DELETED
43				Overall Length: (inches)	
44				Inlet Transition Smallest	12" Nominal Diameter
45				Inside Dimension: (inches)	See Note 5.
46				Inlet Transition Largest	12" Nominal Diameter
47				Inside Dimension: (inches)	See Note 5.
48	Inlet Aerosol Test Port Criteria:	X		Challenge Aerosol Connection Type:	*
49	See Note 8			Challenge Aerosol Connection Size	*
50				Challenge Aerosol Connection Quantity:	*
51					
52					

REMOTE-CHANGE HEPA FILTER HOUSING Data Sheet:

24590-HLW-MAD-HOP-P0013

MR No.	DELETED
Plant Item No	24590-HLW-MK-HOP-HEPA-00002B
Rev No	0

1	Project:	RPP-WTP	Bldg./Rm #	HLW / H104	Manufacturer:	*
2	Project No:	24590	Supporting Calculations	DELETED		
3	Site.	DOE Hanford			Manufacturer Part No:	*
4	Safety Class	SDC	Associated Drawings	24590-HLW-M6-HOP-P0010		
5	Seismic Category	SC-I			Quantity Required	1
6	System No.	HOP	System Desc.	Melter Offgas System	Quality Level	QL-1
7	Description: HLW Vessel Vent / Offgas Melter #1- Secondary "Standby" Housing					
8						

9 HOUSING ACCESSORIES (continued)

10	**Accessory Provided**	**Yes**	**No**	Total Number of Viewing Ports Required:	N/A	
11	Inlet Viewing Ports		X	Inlet Viewing Port Type:	N/A	
12				Inlet Viewing Port Locations:	N/A	
13				Inlet Viewing Port	N/A	Width
14				Dimensions: (inches)	N/A	Length
15	Internal Fire Suppression:		X	Fire Suppression System Description:	N/A	
16				Accessory Information	1 per bank	
17	Vacuum-Relief Vent Assembly:	X		Number Required:	*	
18				Vacuum-Relief Vent Assembly Setpoint:	*	
19				Vacuum-Relief Vent Assembly Manufacturer:	*	
20				Vacuum-Relief Vent Model Number:	N/A	
21	Test w/Outlet Isolation Damper:		X	Damper Provided By:	N/A	
22				Outlet Isolation Damper Type:	N/A	
23				Outlet Isolation Damper Size:	12" Nominal Diameter	
24	Outlet Transition Ductwork.	X		Outlet Transition Ductwork Overall Length: (inches)	DELETED	
25						
26				Outlet Transition Smallest Inside Dimension:(inches)	12" Nominal Diameter	
27						
28				Outlet Transition Largest Inside Dimension. (inches)	12" Nominal Diameter	
29						
30	Outlet Aerosol Test Port Criteria.	X		Challenge Aerosol Connection Type:	*	
31				Challenge Aerosol Connection Size:	*	
32				Challenge Aerosol Connection Quantity:	*	
33	Outlet Viewing Ports.		X	Total Number of Viewing Ports Required:	N/A	
34				Outlet Viewing Port Type:	N/A	
35				Outlet Viewing Port Locations:	N/A	
36				Outlet Viewing Port	N/A	Width
37				Dimensions: (inches)	N/A	Length
38	Differential Pressure Taps:	X		Differential Pressure Tap Size: (inches)	1/2-inch SW	
39	Drain Connection:	See Note 9		Drain Connection Size: (inches)	N/A	
40	Drain Connection Valve:		X	Drain Connection Valve Size: (inches)	1 1/2"	
41				PVC Safe Change Bag Type.	N/A	

42 UTILITY REQUIREMENTS

43	Electrical: (volts/phase/hertz)	N/A
44	Compressed Air:	N/A
45	Intrumentation Taps:	3/4-inch SW
46	Pressure/Leak Test Ports	*
47	Air/Aerosol Mixing Test Ports	*
48		
49		
50		
51		
52		
53		

REMOTE-CHANGE HEPA FILTER HOUSING Data Sheet:

24590-HLW-MAD-HOP-P0013

MR No.

DELETED

Plant Item No.

24590-HLW-MK-HOP-HEPA-00002B

Rev No

0

1	Project:	RPP-WTP	Bldg./Rm #	**HLW / H104**	Manufacturer: *	
2	Project No:	24590	Supporting Calculations	**DELETED**		
3	Site:	DOE Hanford			Manufacturer Part No: *	
4	Safety Class	**SDC**	Associated Drawings	**24590-HLW-M6-HOP-P0010**		
5	Seismic Category	**SC-I**			Quantity Required	**1**
6	System No.	**HOP**	System Desc.	**Melter Offgas System**	Quality Level	**QL-1**
7	Description: **HLW Vessel Vent / Offgas Melter #1- Secondary "Standby" Housing**					
8						

9 Remarks: * Data to be provided by Vendor.

10 **Notes:**

11 **1.) Vendor to fill in data with (*) asterisk.**

12 **2.) DELETED.**

13 **3.) DELETED.**

14 **4.) DELETED.**

15 **5.) Inlet and Outlet I.D.'s to match I.D. of 12" Sch 40S Stainless Steel Pipe.**

16 **6.) N/A denotes "Not Applicable".**

17 **7.) During Shop Test, Contractor may use a temporary valve or a blank-off plate.**

18 **8.) Aerosol test ports include injection and sampling at each stage.**

19 **9.) 1 1/2" plugged drain at low point in the plenum.**

20 **10.) Sealing material and mechanism shall comply with ASME AG-1.**

DANIEL JOSEPH CRAGG
STATE OF WASHINGTON
34635
REGISTERED PROFESSIONAL ENGINEER

4-21-04

EXPIRES: 9-10-04

This document contains 3 pages.

Please note that source, special nuclear and byproduct materials, as defined in the Atomic Energy Act of 1954 (AEA), are regulated at the U.S. Department of Energy (DOE) facilities exclusively by DOE acting pursuant to its AEA authority. DOE asserts, that pursuant to the AEA, it has sole and exclusive responsibility and authority to regulate source, special nuclear, and byproduct materials at DOE-owned nuclear facilities. Information contained herein on radionuclides is provided for process description purposes only.

Rev	Date	Description	Originator	Checker	Approver
0	4/21/04	Issued for Permitting Use	Dale E. Green	M. Orlene	

R10306042

REMOTE-CHANGE HEPA FILTER HOUSING Data Sheet:

24590-HLW-MAD-HOP-P0014

MR No.

DELETED

Plant Item No	Rev No.
24590-HLW-MK-HOP-HEPA-00007A	0

1	Project:	RPP-WTP	Bldg./Rm #	HLW / H104	Manufacturer:	ISSUED BY RPP-WTP PDC 10/21/01 INIT DATE
2	Project No	24590	Supporting Calculations	DELETED		
3	Site.	DOE Hanford			Manufacturer Part No.	
4	Safety Class	SDC	Associated Drawings	24590-HLW-M6-HOP-P20010		
5	Seismic Category	SC-I			Quantity Required	1
6	System No.	HOP	System Desc.	Melter Offgas System	Quality Level	QL-1
7	Description: HLW Vessel Vent / Offgas Melter #2- Primary "Active" Housing					
8						

9 DESIGN CONDITIONS

10	Zone Design Temperature- Summer F	113		Maximum/ Normal Inlet Air Temperature F	200 F	161F
11	Site Storage Conditions - Summer F	SEE SPEC	db	SEE SPEC wb		
12	Housing Interior Chemical Exposure	DELETED				
13	Site Storage Conditions - Winter F	SEE SPEC		Radiological Dose Level per Hr		
14	Indoor Design Temperature - Winter F	59		Radiological Dose Level for Facility Life - 40years		7.2×10^8 Rem

15 PERFORMANCE RATING

16	Design Flow Rate (CFM)	4000		Leakage Rate @ Design Flow &		4 SCFM
17	Maximum Operating Pressure (in wc)	(-) 160"		Max Pressure (CFM)		
18	Maximum Design Pressure (in wc)	(-) 240"		Assembly Clean Pressure Drop with Filters (in wc)		3.5"
19	Total Filter Openings Required	3		Weight with HEPA Filters (pounds)		*
20	No Filters per Bank	2		Weight without HEPA Filters (pounds)		*

21 CONSTRUCTION

22	Design Housing Manufacturer:	*	Design Housing Model Number:	*
23	Housing Construction Method:	All Welded		
24	Housing Material:	Type 304L Stainless Steel	Housing Material Gauge	*
25	Top Panel Material:	Type 304L Stainless Steel	Top Panel Material Gauge.	*
26	Structural Frame Material:	Type 304L Stainless Steel	Structural Frame Features:	*
27	Inlet Plenum Total Volume:	*	Outlet Plenum Total Volume	*
28	Inlet Position (Top/Side)	Side	Outlet Position: (Top/Side)	Side
29	Inlet Inside Dimensions: (inches)	12" Nom.Diam.	Outlet Inside Dimensions: (inches)	12" Nom. Diam.
30		See Note 5.		See Note 5.
31	Inlet Connection Type:	Welded	Outlet Connection Type:	Welded
32	Inlet Flange Bolt Required:	N/A	Outlet Flange Bolts Required:	N/A
33	Inlet Flange Bolt Size:	N/A	Outlet Flange Bolt Size:	N/A
34	Inlet Flange Bolt Material:	N/A	Outlet Flange Bolt Material:	N/A
35	Inlet Flange Gasket Material.	N/A	Outlet Flange Gasket Material:	N/A
36	Paint and Finish Material:	N/A	Paint and Finish Material Minimum Thickness:	N/A

37 HOUSING ACCESSORIES

38	Accessory Provided	Yes	No	Accessory Information	
39	Test w/Inlet Isolation Damper:	X		Damper Provided By:	Vendor
40	See Note 7			Inlet Isolation Damper Type	Gate
41				Inlet Isolation Damper Size	12" Nominal Diameter
42	Inlet Transition Ductwork	X		Inlet Transition Ductwork	DELETED
43				Overall Length. (inches)	
44				Inlet Transition Smallest	12" Nominal Diameter
45				Inside Dimension: (inches)	See Note 5.
46				Inlet Transition Largest	12" Nominal Diameter
47				Inside Dimension: (inches)	See Note 5.
48	Inlet Aerosol Test Port Criteria:	X		Challenge Aerosol Connection Type:	*
49	See Note 8			Challenge Aerosol Connection Size	*
50				Challenge Aerosol Connection Quantity:	*
51					
52					

REMOTE-CHANGE HEPA FILTER HOUSING Data Sheet:

24590-HLW-MAD-HOP-P0014

MR No.	DELETED
Plant Item No.	24590-HLW-MK-HOP-HEPA-00007A
Rev No.	0

1	Project:	RPP-WTP	Bldg./Rm #	HLW / H104	Manufacturer:	*
2	Project No:	24590	Supporting Calculations	DELETED		
3	Site:	DOE Hanford			Manufacturer Part No:	*
4	Safety Class	SDC	Associated Drawings	24590-HLW-M6-HOP-P20010		
5	Seismic Category	SC-I			Quantity Required	1
6	System No.	HOP	System Desc.	Melter Offgas System	Quality Level	QL-1
7	Description:	HLW Vessel Vent / Offgas Melter #2- Primary "Active" Housing				
8						

9 HOUSING ACCESSORIES (continued)

10	Accessory Provided	Yes	No	Total Number of Viewing Ports Required:	N/A	
11	Inlet Viewing Ports		X	Inlet Viewing Port Type:	N/A	
12				Inlet Viewing Port Locations:	N/A	
13				Inlet Viewing Port	N/A	Width
14				Dimensions (inches)	N/A	Length
15	Internal Fire Suppression:		X	Fire Suppression System Description:	N/A	
16				Accessory Information	1 per bank	
17	Vacuum-Relief Vent Assembly	X		Number Required:	*	
18				Vacuum-Relief Vent Assembly Setpoint:	*	
19				Vacuum-Relief Vent Assembly Manufacturer:	*	
20				Vacuum-Relief Vent Model Number:	N/A	
21	Test w/Outlet Isolation Damper:		X	Damper Provided By:	N/A	
22				Outlet Isolation Damper Type:	N/A	
23				Outlet Isolation Damper Size:	DELETED	
24	Outlet Transition Ductwork:	X		Outlet Transition Ductwork Overall Length: (inches)	12" Nominal Diameter	
25						
26				Outlet Transition Smallest Inside Dimension.(inches)	12" Nominal Diameter	
27						
28				Outlet Transition Largest Inside Dimension (inches)	*	
29						
30	Outlet Aerosol Test Port Criteria:	X		Challenge Aerosol Connection Type:	*	
31				Challenge Aerosol Connection Size:	*	
32				Challenge Aerosol Connection Quantity:	*	
33	Outlet Viewing Ports:		X	Total Number of Viewing Ports Required:	N/A	
34				Outlet Viewing Port Type	N/A	
35				Outlet Viewing Port Locations:	N/A	
36				Outlet Viewing Port	N/A	Width
37				Dimensions. (inches)	N/A	Length
38	Differential Pressure Taps:	X		Differential Pressure Tap Size. (inches)	1/2-inch SW	
39	Drain Connection:	See Note 9		Drain Connection Size: (inches)	N/A	
40	Drain Connection Valve:		X	Drain Connection Valve Size: (inches)	1 1/2"	
41				PVC Safe Change Bag Type.	N/A	

42 UTILITY REQUIREMENTS

43	Electrical. (volts/phase/hertz)	N/A
44	Compressed Air.	N/A
45	Intrumentation Taps.	3/4-inch SW
46	Pressure/Leak Test Ports	*
47	Air/Aerosol Mixing Test Ports	*
48		
49		
50		
51		
52		
53		

REMOTE-CHANGE HEPA FILTER HOUSING Data Sheet:

24590-HLW-MAD-HOP-P0014

MR No.

DELETED

Plant Item No.

24590-HLW-MK-HOP-HEPA-00007A

Rev No

0

1	Project:	RPP-WTP	Bldg./Rm #	**HLW / H104**	Manufacturer: *	
2	Project No:	24590	Supporting Calculations	**DELETED**		
3	Site:	DOE Hanford			Manufacturer Part No: *	
4	Safety Class	**SDC**	Associated Drawings	**24590-HLW-M6-HOP-P20010**		
5	Seismic Category	**SC-I**			Quantity Required	**1**
6	System No.	**HOP**	System Desc.	**Melter Offgas System**	Quality Level	**QL-I**
7	Description: **HLW Vessel Vent / Offgas Melter #2- Primary "Active" Housing**					
8						

9 Remarks: * Data to be provided by Vendor.

10 **Notes:**

11 **1.) Vendor to fill in data with (*) asterisk.**

12 **2.) DELETED.**

13 **3.) DELETED.**

14 **4.) DELETED.**

15 **5.) Inlet and Outlet I.D.'s to match I.D. of 12" Sch 40S Stainless Steel Pipe.**

16 **6.) N/A denotes "Not Applicable".**

17 **7.) During Shop Test, Contractor may use a temporary valve or a blank-off plate.**

18 **8.) Aerosol test ports include injection and sampling at each stage.**

19 **9.) 1 1/2" plugged drain at low point in the plenum.**

20 **10.) Sealing materials and mechanism shall comply with ASME AG-1.**

DANIEL JOSEPH CRAGIN
STATE OF WASHINGTON
34535
REGISTERED PROFESSIONAL ENGINEER

4-21-04

EXPIRES: 9-10-04

This document contains 3 pages.

Please note that source, special nuclear and byproduct materials, as defined in the Atomic Energy Act of 1954 (AEA), are regulated at the U.S. Department of Energy (DOE) facilities exclusively by DOE acting pursuant to its AEA authority. DOE asserts, that pursuant to the AEA, it has sole and exclusive responsibility and authority to regulate source, special nuclear, and byproduct materials at DOE-owned nuclear facilities. Information contained herein on radionuclides is provided for process description purposes only.

Rev	Date	Description	Originator	Checker	Approver
0	4/21/04	Issued for Permitting Use	Neil E. Green	M. Adam	

R10306043

REMOTE-CHANGE HEPA FILTER HOUSING Data Sheet:

24590-HLW-MAD-HOP-P0015

MR No.	DELETED
Plant Item No.	24590-HLW-MK-HOP-HEPA-00008A
Rev No.	0

1	Project:	RPP-WTP	Bldg /Rm #	HLW / H104	Manufacturer.	*
2	Project No:	24590	Supporting Calculations	DELETED		
3	Site:	DOE Hanford			Manufacturer Part No:	
4	Safety Class	SDC	Associated Drawings	24590-HLW-M6-HOP-P20010		
5	Seismic Category	SC-I			Quantity Required	
6	System No.	HOP	System Desc.	Melter Offgas System	Quality Level	QL-1
7	Description: HLW Vessel Vent / Offgas Melter #2- Secondary "Active" Housing					
8						

ISSUED BY RPP-WTP PDC DATE 1

9 DESIGN CONDITIONS

10	Zone Design Temperature- Summer F	113		Maximum/ Normal Inlet Air Temperature F	200 F	161 F
11	Site Storage Conditions - Summer F	SEE SPEC	db	SEE SPEC wb		
12	Housing Interior Chemical Exposure	DELETED				
13	Site Storage Conditions - Winter F	SEE SPEC		Radiological Dose Level per Hr		
14	Indoor Design Temperature - Winter F	59		Radiological Dose Level for Facility Life - 40years		7.2×10^8 Rem

15 PERFORMANCE RATING

16	Design Flow Rate (CFM)	4000		Leakage Rate @ Design Flow &		4 SCFM
17	Maximum Operating Pressure (in wc)	(-) 160"		Max Pressure (CFM)		
18	Maximum Design Pressure (in wc)	(-) 240"		Assembly Clean Pressure Drop with Filters (in wc)		3.5"
19	Total Filter Openings Required	3		Weight with HEPA Filters (pounds)		*
20	No. Filters per Bank	2		Weight without HEPA Filters (pounds)		*

21 CONSTRUCTION

22	Design Housing Manufacturer:	*	Design Housing Model Number:	*
23	Housing Construction Method:	All Welded		
24	Housing Material:	Type 304L Stainless Steel	Housing Material Gauge:	*
25	Top Panel Material:	Type 304L Stainless Steel	Top Panel Material Gauge	*
26	Structural Frame Material:	Type 304L Stainless Steel	Structural Frame Features:	*
27	Inlet Plenum Total Volume:	*	Outlet Plenum Total Volume	*
28	Inlet Position: (Top/Side)	Side	Outlet Position: (Top/Side)	Side
29	Inlet Inside Dimensions: (inches)	12" Nom.Diam.	Outlet Inside Dimensions: (inches)	12" Nom. Diam.
30		See Note 5.		See Note 5.
31	Inlet Connection Type:	Welded	Outlet Connection Type:	Welded
32	Inlet Flange Bolt Required:	N/A	Outlet Flange Bolts Required	N/A
33	Inlet Flange Bolt Size:	N/A	Outlet Flange Bolt Size:	N/A
34	Inlet Flange Bolt Material:	N/A	Outlet Flange Bolt Material:	N/A
35	Inlet Flange Gasket Material:	N/A	Outlet Flange Gasket Material	N/A
36	Paint and Finish Material:	N/A	Paint and Finish Material Minimum Thickness:	N/A

37 HOUSING ACCESSORIES

38	Accessory Provided	Yes	No	Accessory Information	
39	Test w/Inlet Isolation Damper:	X		Damper Provided By	Vendor
40	See Note 7			Inlet Isolation Damper Type:	Gate
41				Inlet Isolation Damper Size:	12" Nominal Diameter
42	Inlet Transition Ductwork:	X		Inlet Transition Ductwork	DELETED
43				Overall Length: (inches)	
44				Inlet Transition Smallest	12" Nominal Diameter
45				Inside Dimension: (inches)	See Note 5.
46				Inlet Transition Largest	12" Nominal Diameter
47				Inside Dimension. (inches)	See Note 5.
48	Inlet Aerosol Test Port Criteria	X		Challenge Aerosol Connection Type:	*
49	See Note 8			Challenge Aerosol Connection Size:	*
50				Challenge Aerosol Connection Quantity:	*
51					
52					

REMOTE-CHANGE HEPA FILTER HOUSING Data Sheet:

24590-HLW-MAD-HOP-P0015

MR No.	DELETED
Plant Item No	24590-HLW-MK-HOP-HEPA-00008A
Rev No.	0

1	Project:	RPP-WTP	Bldg./Rm #	HLW / H104	Manufacturer:	*
2	Project No:	24590	Supporting Calculations	DELETED		
3	Site:	DOE Hanford			Manufacturer Part No	*
4	Safety Class	SDC	Associated Drawings	24590-HLW-M6-HOP-P20010		
5	Seismic Category	SC-I			Quantity Required	1
6	System No.	HOP	System Desc.	Melter Offgas System	Quality Level	QL-1
7	Description: HLW Vessel Vent / Offgas Melter #2- Secondary "Active" Housing					
8						

9 HOUSING ACCESSORIES (continued)

10	Accessory Provided	Yes	No	Total Number of Viewing Ports Required:	N/A	
11	Inlet Viewing Ports		X	Inlet Viewing Port Type:	N/A	
12				Inlet Viewing Port Locations:	N/A	
13				Inlet Viewing Port	N/A	Width
14				Dimensions: (inches)	N/A	Length
15	Internal Fire Suppression:		X	Fire Suppression System Description:	N/A	
16				Accessory Information	1 per bank	
17	Vacuum-Relief Vent Assembly:	X		Number Required	*	
18				Vacuum-Relief Vent Assembly Setpoint:	*	
19				Vacuum-Relief Vent Assembly Manufacturer:	*	
20				Vacuum-Relief Vent Model Number:	N/A	
21	Test w/Outlet Isolation Damper:		X	Damper Provided By:	N/A	
22				Outlet Isolation Damper Type:	N/A	
23				Outlet Isolation Damper Size:	12" Nominal Diameter	
24	Outlet Transition Ductwork:	X		Outlet Transition Ductwork Overall Length: (inches)	DELETED	
25						
26				Outlet Transition Smallest Inside Dimension (inches)	12" Nominal Diameter	
27						
28				Outlet Transition Largest Inside Dimension: (inches)	12" Nominal Diameter	
29						
30	Outlet Aerosol Test Port Criteria	X		Challenge Aerosol Connection Type:	*	
31				Challenge Aerosol Connection Size.	*	
32				Challenge Aerosol Connection Quantity:	*	
33	Outlet Viewing Ports.		X	Total Number of Viewing Ports Required	N/A	
34				Outlet Viewing Port Type:	N/A	
35				Outlet Viewing Port Locations:	N/A	
36				Outlet Viewing Port	N/A	Width
37				Dimensions: (inches)	N/A	Length
38	Differential Pressure Taps:	X		Differential Pressure Tap Size: (inches)	1/2-inch SW	
39	Drain Connection.	See Note 9		Drain Connection Size: (inches)	N/A	
40	Drain Connection Valve:		X	Drain Connection Valve Size. (inches)	1 1/2"	
41				PVC Safe Change Bag Type:	N/A	

42 UTILITY REQUIREMENTS

43	Electrical: (volts/phase/hertz)	N/A
44	Compressed Air:	N/A
45	Intrumentation Taps:	3/4-inch SW
46	Pressure/Leak Test Ports	*
47	Air/Aerosol Mixing Test Ports	*
48		
49		
50		
51		
52		
53		

REMOTE-CHANGE HEPA FILTER HOUSING Data Sheet:

24590-HLW-MAD-HOP-P0015

MR No

DELETED

Plant Item No.	Rev No.
24590-HLW-MK-HOP-HEPA-00008A	0

1	Project:	RPP-WTP	Bldg /Rm #	HLW / H104	Manufacturer.	*
2	Project No.	24590	Supporting Calculations	DELETED		
3	Site:	DOE Hanford			Manufacturer	*
4	Safety Class	SDC	Associated Drawings	24590-HLW-M6-HOP-P20010	Part No:	
5	Seismic Category	SC-I			Quantity Required	1
6	System No.	HOP	System Desc.	Melter Offgas System	Quality Level	QL-1
7	Description:	HLW Vessel Vent / Offgas Melter #2- Secondary "Active" Housing				
8						

9 Remarks: * Data to be provided by Vendor.

10 **Notes:**

11 **1.) Vendor to fill in data with (*) asterisk.**

12 **2.) DELETED.**

13 **3.) DELETED.**

14 **4.) DELETED.**

15 **5.) Inlet and Outlet I.D.'s to match I.D. of 12" Sch 40S Stainless Steel Pipe.**

16 **6.) N/A denotes "Not Applicable".**

17 **7.) During Shop Test, Contractor may use a temporary valve or a blank-off plate.**

18 **8.) Aerosol test ports include injection and sampling at each stage.**

19 **9.) 1 1/2" plugged drain at low point in the plenum.**

20 **10.) Sealing materials and mechanism shall comply with ASME AG-1.**

DANIEL JOSEPH CRAVEN
STATE OF WASHINGTON
34535
REGISTERED PROFESSIONAL ENGINEER

4-21-04

EXPIRES: 9-10-04

This document contains 3 pages.

Please note that source, special nuclear and byproduct materials, as defined in the Atomic Energy Act of 1954 (AEA), are regulated at the U.S. Department of Energy (DOE) facilities exclusively by DOE acting pursuant to its AEA authority. DOE asserts, that pursuant to the AEA, it has sole and exclusive responsibility and authority to regulate source, special nuclear, and byproduct materials at DOE-owned nuclear facilities. Information contained herein on radionuclides is provided for process description purposes only.

Rev	Date	Description	Originator	Checker	Approver
0	4/21/04	Issued for Permitting Use	Dale E. Green	M. Orme	

R10306086

REMOTE-CHANGE HEPA FILTER HOUSING Data Sheet:

24590-HLW-MAD-HOP-P0016

MR No	DELETED
Plant Item No.	24590-HLW-MK-HOP-HEPA-00007B
Rev No	0

1	Project:	RPP-WTP	Bldg./Rm #	HLW / H104	Manufacturer:	*
2	Project No:	24590	Supporting Calculations	DELETED		
3	Site:	DOE Hanford			Manufacturer	
4	Safety Class	SDC	Associated Drawings	24590-HLW-M6-HOP-P20010	Part No:	
5	Seismic Category	SC-I			Quantity Required	1
6	System No.	HOP	System Desc.	Melter Offgas System	Quality Level	QL-1
7	Description: HLW Vessel Vent / Offgas Melter #2- Primary "Standby" Housing					
8						

ISSUED BY RPP-WTP PDC INIT DATE

9 DESIGN CONDITIONS

10	Zone Design Temperature- Summer F	113		Maximum/ Normal Inlet Air Temperature F	200 F	161 F
11	Site Storage Conditions - Summer F	SEE SPEC	db	SEE SPEC	wb	
12	Housing Interior Chemical Exposure	DELETED				
13	Site Storage Conditions - Winter F	SEE SPEC		Radiological Dose Level per Hr		
14	Indoor Design Temperature - Winter F	59		Radiological Dose Level for Facility Life - 40years		7.2×10^8 Rem

15 PERFORMANCE RATING

16	Design Flow Rate (CFM)	4000		Leakage Rate @ Design Flow &		4 SCFM
17	Maximum Operating Pressure (in wc)	(-) 160"		Max Pressure (CFM)		
18	Maximum Design Pressure (in wc)	(-) 240"		Assembly Clean Pressure Drop with Filters (in wc)		3.5"
19	Total Filter Openings Required	3		Weight with HEPA Filters (pounds)		*
20	No. Filters per Bank	2		Weight without HEPA Filters (pounds)		*

21 CONSTRUCTION

22	Design Housing Manufacturer:	*	Design Housing Model Number:	*
23	Housing Construction Method.	All Welded		
24	Housing Material:	Type 304L Stainless Steel	Housing Material Gauge	*
25	Top Panel Material.	Type 304L Stainless Steel	Top Panel Material Gauge:	*
26	Structural Frame Material:	Type 304L Stainless Steel	Structural Frame Features:	*
27	Inlet Plenum Total Volume.	*	Outlet Plenum Total Volume	*
28	Inlet Position: (Top/Side)	Side	Outlet Position: (Top/Side)	Side
29	Inlet Inside Dimensions: (inches)	12" Nom.Diam.	Outlet Inside Dimensions (inches)	12" Nom. Diam.
30		See Note 5.		See Note 5.
31	Inlet Connection Type	Welded	Outlet Connection Type:	Welded
32	Inlet Flange Bolt Required	N/A	Outlet Flange Bolts Required	N/A
33	Inlet Flange Bolt Size:	N/A	Outlet Flange Bolt Size:	N/A
34	Inlet Flange Bolt Material.	N/A	Outlet Flange Bolt Material:	N/A
35	Inlet Flange Gasket Material:	N/A	Outlet Flange Gasket Material.	N/A
36	Paint and Finish Material	N/A	Paint and Finish Material Minimum Thickness:	N/A

37 HOUSING ACCESSORIES

38	Accessory Provided	Yes	No	Accessory Information	
39	Test w/Inlet Isolation Damper:	X		Damper Provided By:	Vendor
40	See Note 7			Inlet Isolation Damper Type	Gate
41				Inlet Isolation Damper Size:	12" Nominal Diameter
42	Inlet Transition Ductwork:	X		Inlet Transition Ductwork	DELETED
43				Overall Length (inches)	
44				Inlet Transition Smallest	12" Nominal Diameter
45				Inside Dimension: (inches)	See Note 5.
46				Inlet Transition Largest	12" Nominal Diameter
47				Inside Dimension: (inches)	See Note 5.
48	Inlet Aerosol Test Port Criteria:	X		Challenge Aerosol Connection Type:	*
49	See Note 8			Challenge Aerosol Connection Size:	*
50				Challenge Aerosol Connection Quantity:	*
51					
52					

REMOTE-CHANGE HEPA FILTER HOUSING Data Sheet:

24590-HLW-MAD-HOP-P0016

MR No.	DELETED
Plant Item No	24590-HLW-MK-HOP-HEPA-00007B
Rev No	0

1	Project:	RPP-WTP	Bldg./Rm #	HLW / H104	Manufacturer:	*
2	Project No	24590	Supporting Calculations	DELETED		
3	Site:	DOE Hanford			Manufacturer Part No	*
4	Safety Class	SDC	Associated Drawings	24590-HLW-M6-HOP-P20010		
5	Seismic Category	SC-I			Quantity Required	1
6	System No.	HOP	System Desc.	Melter Offgas System	Quality Level	QL-1
7	Description: HLW Vessel Vent / Offgas Melter #2- Primary "Standby" Housing					
8						

9 HOUSING ACCESSORIES (continued)

10	**Accessory Provided**	**Yes**	**No**	Total Number of Viewing Ports Required:	N/A	
11	Inlet Viewing Ports		X	Inlet Viewing Port Type:	N/A	
12				Inlet Viewing Port Locations:	N/A	
13				Inlet Viewing Port	N/A	Width
14				Dimensions: (inches)	N/A	Length
15	Internal Fire Suppression:		X	Fire Suppression System Description:	N/A	
16				Accessory Information	1 per bank	
17	Vacuum-Relief Vent Assembly:	X		Number Required:	*	
18				Vacuum-Relief Vent Assembly Setpoint:	*	
19				Vacuum-Relief Vent Assembly Manufacturer	*	
20				Vacuum-Relief Vent Model Number	N/A	
21	Test w/Outlet Isolation Damper:		X	Damper Provided By:	N/A	
22				Outlet Isolation Damper Type:	N/A	
23				Outlet Isolation Damper Size	12" Nominal Diameter	
24	Outlet Transition Ductwork:	X		Outlet Transition Ductwork Overall Length. (inches)	DELETED	
25						
26				Outlet Transition Smallest Inside Dimension (inches)	12" Nominal Diameter	
27						
28				Outlet Transition Largest Inside Dimension: (inches)	12" Nominal Diameter	
29						
30	Outlet Aerosol Test Port Criteria:	X		Challenge Aerosol Connection Type.	*	
31				Challenge Aerosol Connection Size:	*	
32				Challenge Aerosol Connection Quantity:	*	
33	Outlet Viewing Ports:		X	Total Number of Viewing Ports Required:	N/A	
34				Outlet Viewing Port Type:	N/A	
35				Outlet Viewing Port Locations:	N/A	
36				Outlet Viewing Port	N/A	Width
37				Dimensions. (inches)	N/A	Length
38	Differential Pressure Taps:	X		Differential Pressure Tap Size: (inches)	1/2-inch SW	
39	Drain Connection:	See Note 9		Drain Connection Size (inches)	N/A	
40	Drain Connection Valve:		X	Drain Connection Valve Size (inches)	1 1/2"	
41				PVC Safe Change Bag Type:	N/A	

42 UTILITY REQUIREMENTS

43	Electrical: (volts/phase/hertz)	N/A
44	Compressed Air:	N/A
45	Intrumentation Taps	3/4-inch SW
46	Pressure/Leak Test Ports	*
47	Air/Aerosol Mixing Test Ports	*
48		
49		
50		
51		
52		
53		

REMOTE-CHANGE HEPA FILTER HOUSING Data Sheet:

24590-HLW-MAD-HOP-P0016

MR No.

DELETED

Plant Item No.

24590-HLW-MK-HOP-HEPA-00007B

Rev No.

0

1	Project:	RPP-WTP	Bldg./Rm #	**HLW / H104**	Manufacturer	*
2	Project No	24590	Supporting Calculations	**DELETED**		
3	Site:	DOE Hanford			Manufacturer Part No	*
4	Safety Class	**SDC**	Associated Drawings	**24590-HLW-M6-HOP-P20010**		
5	Seismic Category	**SC-I**			Quantity Required	**1**
6	System No.	**HOP**	System Desc.	**Melter Offgas System**	Quality Level	**QL-1**
7	Description: **HLW Vessel Vent / Offgas Melter #2- Primary "Standby" Housing**					
8						

9 Remarks * Data to be provided by Vendor.

10 **Notes:**

11 **1.) Vendor to fill in data with (*) asterisk.**

12 **2.) DELETED.**

13 **3.) DELETED.**

14 **4.) DELETED.**

15 **5.) Inlet and Outlet I.D.'s to match I.D. of 12" Sch 40S Stainless Steel Pipe.**

16 **6.) N/A denotes "Not Applicable".**

17 **7.) During Shop Test, Contractor may use a temporary valve or a blank-off plate.**

18 **8.) Aerosol test ports include injection and sampling at each stage.**

19 **9.) 1 1/2" plugged drain at low point in the plenum.**

20 **10.) Sealing material and mechanism shall comply with ASME AG-1.**

DANIEL JOSEPH CRAIG
STATE OF WASHINGTON
34535
REGISTERED
PROFESSIONAL ENGINEER

4-21-04

EXPIRES: 9-10-04

This document contains 3 pages

Please note that source, special nuclear and byproduct materials, as defined in the Atomic Energy Act of 1954 (AEA), are regulated at the U.S. Department of Energy (DOE) facilities exclusively by DOE acting pursuant to its AEA authority. DOE asserts, that pursuant to the AEA, it has sole and exclusive responsibility and authority to regulate source, special nuclear, and byproduct materials at DOE-owned nuclear facilities. Information contained herein on radionuclides is provided for process description purposes only.

Rev	Date	Description	Originator	Checker	Approver
0	4/21/04	Issued for Permitting Use	Dale E. Green	M. Orme	

R10306044

REMOTE-CHANGE HEPA FILTER HOUSING Data Sheet:

24590-HLW-MAD-HOP-P0017

MR No.	DELETED
Plant Item No	24590-HLW-MK-HOP-HEPA-00008B
Rev No.	0

1	Project:	RPP-WTP	Bldg./Rm #	HLW / H104	Manufacturer.	ISSUED BY RPP-WTP PDC 4/30/01 INIT DATE
2	Project No:	24590	Supporting Calculations	DELETED		
3	Site:	DOE Hanford			Manufacturer Part No	
4	Safety Class	SDC	Associated Drawings	24590-HLW-M6-HOP-P20010		
5	Seismic Category	SC-I			Quantity Required	1
6	System No.	HOP	System Desc.	Melter Offgas System	Quality Level	QL-1
7	Description: HLW Vessel Vent / Offgas Melter #2- Secondary "Standby" Housing					
8						

9 DESIGN CONDITIONS

10	Zone Design Temperature- Summer F	113		Maximum/ Normal Inlet Air Temperature F	200 F	161 F
11	Site Storage Conditions - Summer F	SEE SPEC	db	SEE SPEC wb		
12	Housing Interior Chemical Exposure	DELETED				
13	Site Storage Conditions - Winter F	SEE SPEC		Radiological Dose Level per Hr		
14	Indoor Design Temperature - Winter F	59		Radiological Dose Level for Facility Life - 40years		7.2×10^8 Rem

15 PERFORMANCE RATING

16	Design Flow Rate (CFM)	4000		Leakage Rate @ Design Flow &		4 SCFM
17	Maximum Operating Pressure (in wc)	(-) 160"		Max Pressure (CFM)		
18	Maximum Design Pressure (in wc)	(-) 240"		Assembly Clean Pressure Drop with Filters (in wc)		3.5"
19	Total Filter Openings Required	3		Weight with HEPA Filters (pounds)		*
20	No. Filters per Bank	2		Weight without HEPA Filters (pounds)		*

21 CONSTRUCTION

22	Design Housing Manufacturer:	*	Design Housing Model Number:	*
23	Housing Construction Method:	All Welded		
24	Housing Material:	Type 304L Stainless Steel	Housing Material Gauge:	*
25	Top Panel Material	Type 304L Stainless Steel	Top Panel Material Gauge	*
26	Structural Frame Material:	Type 304L Stainless Steel	Structural Frame Features	*
27	Inlet Plenum Total Volume:	*	Outlet Plenum Total Volume	*
28	Inlet Position: (Top/Side)	Side	Outlet Position (Top/Side)	Side
29	Inlet Inside Dimensions: (inches)	12" Nom.Diam.	Outlet Inside Dimensions: (inches)	12" Nom. Diam.
30		See Note 5.		See Note 5.
31	Inlet Connection Type:	Welded	Outlet Connection Type	Welded
32	Inlet Flange Bolt Required	N/A	Outlet Flange Bolts Required.	N/A
33	Inlet Flange Bolt Size:	N/A	Outlet Flange Bolt Size:	N/A
34	Inlet Flange Bolt Material:	N/A	Outlet Flange Bolt Material:	N/A
35	Inlet Flange Gasket Material:	N/A	Outlet Flange Gasket Material.	N/A
36	Paint and Finish Material:	N/A	Paint and Finish Material Minimum Thickness.	N/A

37 HOUSING ACCESSORIES

38	Accessory Provided	Yes	No	Accessory Information	
39	Test w/Inlet Isolation Damper:	X		Damper Provided By:	Vendor
40	See Note 7			Inlet Isolation Damper Type:	Gate
41				Inlet Isolation Damper Size:	12" Nominal Diameter
42	Inlet Transition Ductwork:	X		Inlet Transition Ductwork	DELETED
43				Overall Length: (inches)	
44				Inlet Transition Smallest	12" Nominal Diameter
45				Inside Dimension: (inches)	See Note 5.
46				Inlet Transition Largest	12" Nominal Diameter
47				Inside Dimension: (inches)	See Note 5.
48	Inlet Aerosol Test Port Criteria:	X		Challenge Aerosol Connection Type:	*
49	See Note 8			Challenge Aerosol Connection Size.	*
50				Challenge Aerosol Connection Quantity:	*
51					
52					

REMOTE-CHANGE HEPA FILTER HOUSING Data Sheet:

24590-HLW-MAD-HOP-P0017

MR No.	DELETED
Plant Item No.	24590-HLW-MK-HOP-HEPA-00008B
Rev No	0

1	Project:	RPP-WTP	Bldg./Rm #	HLW / H104	Manufacturer:	*
2	Project No:	24590	Supporting Calculations	DELETED		
3	Site:	DOE Hanford			Manufacturer Part No.	*
4	Safety Class	SDC	Associated Drawings	24590-HLW-M6-HOP-P20010		
5	Seismic Category	SC-I			Quantity Required	1
6	System No	HOP	System Desc.	Melter Offgas System	Quality Level	QL-1
7	Description: HLW Vessel Vent / Offgas Melter #2- Secondary "Standby" Housing					
8						

9 HOUSING ACCESSORIES (continued)

10	**Accessory Provided**	**Yes**	**No**	Total Number of Viewing Ports Required	N/A	
11	Inlet Viewing Ports		X	Inlet Viewing Port Type:	N/A	
12				Inlet Viewing Port Locations	N/A	
13				Inlet Viewing Port	N/A	Width
14				Dimensions: (inches)	N/A	Length
15	Internal Fire Suppression:		X	Fire Suppression System Description.	N/A	
16				Accessory Information	1 per bank	
17	Vacuum-Relief Vent Assembly	X		Number Required:	*	
18				Vacuum-Relief Vent Assembly Setpoint:	*	
19				Vacuum-Relief Vent Assembly Manufacturer.	*	
20				Vacuum-Relief Vent Model Number.	N/A	
21	Test w/Outlet Isolation Damper:		X	Damper Provided By	N/A	
22				Outlet Isolation Damper Type:	N/A	
23				Outlet Isolation Damper Size:	12" Nominal Diameter	
24	Outlet Transition Ductwork.	X		Outlet Transition Ductwork Overall Length: (inches)	DELETED	
25						
26				Outlet Transition Smallest Inside Dimension:(inches)	12" Nominal Diameter	
27						
28				Outlet Transition Largest Inside Dimension: (inches)	12" Nominal Diameter	
29						
30	Outlet Aerosol Test Port Criteria:	X		Challenge Aerosol Connection Type.	*	
31				Challenge Aerosol Connection Size:	*	
32				Challenge Aerosol Connection Quantity:	*	
33	Outlet Viewing Ports:		X	Total Number of Viewing Ports Required:	N/A	
34				Outlet Viewing Port Type:	N/A	
35				Outlet Viewing Port Locations	N/A	
36				Outlet Viewing Port	N/A	Width
37				Dimensions: (inches)	N/A	Length
38	Differential Pressure Taps.	X		Differential Pressure Tap Size: (inches)	1/2-inch SW	
39	Drain Connection:	See Note 9		Drain Connection Size: (inches)	N/A	
40	Drain Connection Valve:		X	Drain Connection Valve Size. (inches)	1 1/2"	
41				PVC Safe Change Bag Type:	N/A	

42 UTILITY REQUIREMENTS

43	Electrical: (volts/phase/hertz)	N/A
44	Compressed Air:	N/A
45	Intrumentation Taps:	3/4-inch SW
46	Pressure/Leak Test Ports	*
47	Air/Aerosol Mixing Test Ports	*
48		
49		
50		
51		
52		
53		

REMOTE-CHANGE HEPA FILTER HOUSING Data Sheet:

24590-HLW-MAD-HOP-P0017

MR No.	DELETED
Plant Item No.	24590-HLW-MK-HOP-HEPA-00008B
Rev No.	0

1	Project	RPP-WTP	Bldg./Rm #	HLW / H104	Manufacturer:	*
2	Project No:	24590	Supporting Calculations	DELETED		
3	Site:	DOE Hanford			Manufacturer Part No:	*
4	Safety Class	SDC	Associated Drawings	24590-HLW-M6-HOP-P20010		
5	Seismic Category	SC-I			Quantity Required	1
6	System No	HOP	System Desc.	Melter Offgas System	Quality Level	QL-1
7	Description: HLW Vessel Vent / Offgas Melter #2- Secondary "Standby" Housing					
8						

9 Remarks: * Data to be provided by Vendor.

10 **Notes:**

11 **1.) Vendor to fill in data with (*) asterisk.**

12 **2.) DELETED.**

13 **3.) DELETED.**

14 **4.) DELETED.**

15 **5.) Inlet and Outlet I.D.'s to match I.D. of 12" Sch 40S Stainless Steel Pipe.**

16 **6.) N/A denotes "Not Applicable".**

17 **7.) During Shop Test, Contractor may use a temporary valve or a blank-off plate.**

18 **8.) Aerosol test ports include injection and sampling at each stage.**

19 **9.) 1 1/2" plugged drain at low point in the plenum.**

20 **10.) Sealing materials and mechanism shall comply with ASME AG-1.**

DANIEL JOSEPH CRAGIN
STATE OF WASHINGTON
34656
REGISTERED PROFESSIONAL ENGINEER

4-21-04

EXPIRES: 9-10-04

This document contains 3 pages

Please note that source, special nuclear and byproduct materials, as defined in the Atomic Energy Act of 1954 (AEA), are regulated at the U.S. Department of Energy (DOE) facilities exclusively by DOE acting pursuant to its AEA authority. DOE asserts, that pursuant to the AEA, it has sole and exclusive responsibility and authority to regulate source, special nuclear, and byproduct materials at DOE-owned nuclear facilities. Information contained herein on radionuclides is provided for process description purposes only.

Rev	Date	Description	Originator	Checker	Approver
0	4/21/04	Issued for Permitting Use	Dale E. Green	M. Orme	

R10484665

ISSUED BY RPP-WTP PDC

CENTRIFUGAL BLOWER Data Sheet:

24590-HLW-MAD-HOP-P0018

MR No. 24590-QL-MRA-MACS-00002

Plant Item No. (See Note 11)
24590-HLW-HOP-FAN-00001A/B/C
24590-HLW-HOP-FAN-00009A/B/C

Rev No. 2 (2)

1	Project:	RPP-WTP	Bldg /Room #	HLW / H-B001C	Manufacturer:	The Spencer Turbine Co.	
2	Project No:	24590	Supporting	DELETED			(2)
3	Site:	DOE Hanford	Calculation		Manufacturer	*	
4	Safety Class	SDS	Supporting	24590-HLW-M6-HOP-P0003	Model No:		
5	Seismic Category	SC-III	Drawings	24590-HLW-M6-HOP-P20003	Quantity Required		6
6	System No.	HOP	System Desc	24590-HLW-3YD-HOP-00001	Quality Level		QL2
7			Process Data Sheets	Deleted			(2)
8	Description: Booster Extraction Fan						

9 DESIGN TEMPERATURES

10	Zone Design Temperature	Summer °F	95					
11	Indoor Design Temperature	Minimum °F	59	Maximum °F	95	Relative Humidity	10%	(min.)
12								
13	Contamination Classification Area	DELETED	Elevation:	661	Ft above MSL			

14 DESIGN CONDITIONS

15	Design Fan Capacity	1600	ACFM	Inlet Air Temperature at max flow (Design)	162	°F
16	Design External Static Pres. (Note 12)	84	inches WC	Suction Air Density at max flow (Design)	0.046	lbs/ft^3
17	Normal Fan Capacity	847	ACFM	Inlet Air Temperature at normal flow	143	°F (2)
18	External Static Pressure at normal flow	62	inches WC	Suction Air Density at normal flow	0.054	lbs/ft^3
19	Minimum Operating Fan Capacity	627	ACFM	Inlet Air Temperature at minimum operating flow	127	°F
20	External Static Pressure at min op flow	37	inches WC	Suction Air Density at minimum operating flow	0.058	lbs/ft^3
21	Total Static Pressure (Max)	*	inches WC	Fan Inlet Pressure range	11.0 to 12.7	psia
22	Minimum Fan Efficiency	*	%	Fan Discharge Pressure range	13.9 to 14.0	psia (2)
23	Fan Operating Speed	*	RPM	Fan Motor Operating Weight	*	pounds
24	Power at Operating Conditions	*	BHP	Power at Inlet Temperature	*	BHP
25	Assembly Weight (Mtr + Fan + Base)	*	pounds	Max. Temp. & Rate of Rise for Mech. Design	350 / 30	°F / °F/sec (2)

26 CONSTRUCTION

27	Design Fan Manufacturer	*	Design Fan Model Number	*
28	AMCA Drive Arrangement	8	AMCA Inlet Box Position	*
29	AMCA Motor Position	Direct Drive	AMCA Discharge	Upblast
30	AMCA Rotation	CW (See Note 9)	Fan Scroll Type	*

31 FAN WHEEL

32	Fan Wheel Type	* (See Note 4)	Fan Shaft Diameter	*
33	Design Wheel Diameter	*	Actual Wheel Diameter	*
34	Design Wheel Width	*	Actual Wheel Width	*
35	Design Fan RPM	*	Actual Fan RPM @ design	* (2)
36	Design Brake Horsepower	*	Actual Brake Horsepower	*
37	Fan Bearing Type	*	Fan Bearing Designator	*
38	First Critical Speed Range	* rpm	Second Critical Speed Range	* rpm (2)

39 FAN MATERIALS

40	Housing	316L SS	Fan Wheel	316L SS
41	Evase	N/A	Mounting Frame	316L SS (2)
42	Shaft	316L SS	Inlet Box / Transition Piece	316L SS / 316L SS
43	Inlet Vane	N/A	Discharge Damper	N/A
44	Inlet Screen	N/A	Bearing Special Features	N/A
45	Mechanical Coupling	Falk Flex-Type (or equal)	Safety Guards Types	OSHA Compatible

46 FAN ACCESSORIES

47	Flanged Inlet	Yes		Flanged Inlet Dimensions, in.	*
48	Flanged Discharge	Yes		Flanged Discharge Dimensions, in.	* (See Note 6) (2)
49	Flanged Discharge Evase		No	Flanged Discharge Evase Dimensions, in	N/A
50	Split Housing	Yes		Split Housing Type	*
51	Inlet Box	Yes		Inlet Box Type	* (2)
52	Inlet Damper		No	Inlet Damper Type	N/A
53	Inlet Transition Piece	Yes		Inlet Transition Piece Inlet Flange Dimen, in.	* (See Note 6)
54	Inspection Door	Yes		Inspection Door Size, in.	* 1 in. dia., half-coupling w/ plug (See Note 10) (2)
55	Drain Connection	Yes		Drain Connection Size, in.	* See Spec.
56	Shaft Seals	Yes		Seal Type	* Gas Tight

CENTRIFUGAL BLOWER
Data Sheet:

24590-HLW-MAD-HOP-P0018

MR No.
24590-QL-MRA-MACS-00002

Plant Item No. (See Note 11)
24590-HLW-HOP-FAN-00001A/B/C
24590-HLW-HOP-FAN-00009A/B/C

Rev No 2 △2

1	Project	RPP-WTP	Bldg./Room #	HLW / H-B001C	Manufacturer:	The Spencer Turbine Co.
2	Project No	24590	Supporting Calculation	DELETED		△2
3	Site	DOE Hanford			Manufacturer	*
4	Safety Class	SDS	Supporting Drawings	24590-HLW-M6-HOP-P0003	Model No:	
5	Seismic Category	SC-III		24590-HLW-M6-HOP-P20003	Quantity Required	6
6	System No.	HOP	System Desc	24590-HLW-3YD-HOP-00001	Quality Level	QL2
7			Process Data Sheets	Deleted		△2
8	Description: **Booster Extraction Fan**					

9	**FAN ACCESSORIES (continued)**				
10	Isolation Base		No	Isolation Base Type	N/A
11				Isolation Base Manufacturer	N/A
12	Isolation Springs	Yes		Isolation Springs Mfr and Model No	*
13				Isolation Springs Minimum Diameter	*
14				Isolation Springs Deflection	*
15				Isolation Springs Restraint Features	*
16	Flexible Inlet Connection	Yes		Flexible Inlet Connection Dimensions	* (See Note 6)
17	Flexible Inlet Connection Type		*		△2
18	Flexible Inlet Connection Material		* 316L SS		
19	Flexible Inlet Connection Manufacturer and Model No			*	
20	Flexible Outlet Connection	Yes		Flexible Outlet Connection Dimensions	* (See Note 6)
21	Flexible Outlet Connection Type		*		
22	Flexible Outlet Connection Material		* 316L SS		
23	Flexible Outlet Connection Manufacturer and Model No			*	
24	Inlet Screen		No		
25	Inlet Screen Features	N/A			
26	Fan Pedestal	Yes			
27	Fan Pedestal Description	Common mounting base for fan, motor, and bearings			
28	Insulation Studs		No	Insulation thickness	N/A
29	Silencer		No		△2
30	**MOTOR AND DRIVE REQUIREMENTS**				
31	**Deleted**				
32	Adjustable Speed Drive	Yes			△2
33	Special Drive Features	Provide ASD programming for motor RPM to pass through first critical speed dead band to avoid excessive vibration.			

34 **NOTES**

35 1) * Denotes data to be provided / verified by Vendor
36 2) N/A denotes "Not Applicable".
37 3) TBD denotes "To Be Determined" at a later date.
38 4) The impeller shall be anti-surge design developing continuously rising SP from free delivery thru shutoff.
39 5) Bounding dimensions not to exceed 45" w x 60" h x 105" l (Blower, Motor, Baseplate and Inlet Box). △2
40 6) Connections shall match Buyer's supply pipe: 10 inch diameter, 316L SS, Sched 40S, w/ 150 lb, RF Flange.
41 7) See Specification 24590-WTP-3PS-MACS-TP004 for additional requirements.
42 8) Motor horsepower to be provided by Vendor. Assume "cold-gas" conditions (59 °F) at startup.
43 9) Rotation is listed as viewed from drive side.
44 10) Provide a plugged inspection port for each stage of the multi-stage blower. △2
45 11) Driven Equipment / Motor / Adjustable Speed Drive (ASD) equipment tag relationship is as follows:

	Fan Tag Number		Motor Tag Number		ASD Tag Number
46					
47	HOP-FAN-00001A	/	HOP-MTR-00005A	/	HOP-ASD-00001A
48	HOP-FAN-00001B	/	HOP-MTR-00005B	/	HOP-ASD-00001B
49	HOP-FAN-00001C	/	HOP-MTR-00005C	/	HOP-ASD-00001C
50	HOP-FAN-00009A	/	HOP-MTR-00006A	/	HOP-ASD-00003A
51	HOP-FAN-00009B	/	HOP-MTR-00006B	/	HOP-ASD-00003B
52	HOP-FAN-00009C	/	HOP-MTR-00006C	/	HOP-ASD-00003C

53 12) The External Static Pressure at design, normal, and minimum operating flows includes 2 inches WC maximum drop through the inlet box △2
54 13) Contents of this document are Dangerous Waste Permit affecting.

CENTRIFUGAL BLOWER
Data Sheet:
24590-HLW-MAD-HOP-P0018

MR No.
24590-QL-MRA-MACS-00002

Plant Item No (See Note 11)
24590-HLW-HOP-FAN-00001A/B/C
24590-HLW-HOP-FAN-00009A/B/C

Rev No
2 △2

1	Project	RPP-WTP	Bldg./Room #	HLW / H-B001C	Manufacturer.	The Spencer Turbine Co.
2	Project No	24590	Supporting	DELETED		
3	Site:	DOE Hanford	Calculation		Manufacturer	*
4	Safety Class	SDS	Supporting	24590-HLW-M6-HOP-P0003	Model No:	
5	Seismic Category	SC-III	Drawings	24590-HLW-M6-HOP-P20003	Quantity Required	6
6	System No.	HOP	System Desc	24590-HLW-3YD-HOP-00001	Quality Level	QL2
7			Process Data Sheets	Deleted		
8	Description: Booster Extraction Fan					

Please note that source, special nuclear and byproduct materials, as defined in the Atomic Energy Act of 1954 (AEA), are regulated at the U.S. Department of Energy (DOE) facilities exclusively by DOE acting pursuant to its AEA authority. DOE asserts, that pursuant to the AEA, it has sole and exclusive responsibility and authority to regulate source, special nuclear, and byproduct materials at DOE-owned nuclear facilities. Information contained herein on radionuclides is provided for process description purposes only.

ERIC B. ISERN
STATE OF WASHINGTON
33449
REGISTERED
PROFESSIONAL ENGINEER
2/15/05

EXPIRES: 07/28/05

This bound document contains a total of 3 sheets.

Rev	Date	Description	Originator	Checker	Reviewer	Approver
2	2/15/05	Re-Issued for Permitting Use	R. Tomatgat	Jason Medina		
1	9/15/04	Updated design conditions and Re-issued for Permitting Use. Superseded 24590-HLW-MAD-HOP-P0019, P0020, P0035, P0036 & P0037.	K. Kirschenheiter	Jason Medina / SC	N/A	Eric Isern
0	3/19/04	Issued for Permitting Use	Dale E Green	M. Ordona / DMY	N/A	M. Hoffmann

R10272780

HIGH-PRESSURE CENTRIFUGAL BLOWER Data Sheet:

24590-HLW-MAD-HOP-P0019

MR No: **24590-QL-MRA-MACS-00002**

Plant Item No.: **24590-HLW-MA-HOP-FAN-00001B**

Rev. No.: **0**

1	Project:	RPP-WTP	Bldg./Room #	HLW / H-B001C	Manufacturer:	*	
2	Project No	24590	Supporting	DELETED			
3	Site:	DOE Hanford	Calculation		Manufacturer		
4	Safety Class	SDS	Supporting	24590-HLW-M6-HOP-P0003	Part No:		
5	Seismic Category	SC-III	Drawings		Quantity Required		1
6	System No.	HOP	System Desc	24590-HLW-3YD-HOP-00001	Quality Level		QL2
7	Description. **HLW Offgas Booster Fan**						
8							

ISSUED BY RPP-WTP PDC 3/19/01 INIT DATE

9 DESIGN TEMPERATURES

10	Zone Design Temperature	Summer °F	95					
11	Indoor Design Temperature	Minimum °F	59	Maximum °F	95	Relative Humidity	10%	(min.)
12								
13	Contamination Classification Area	DELETED	Elevation	661	Ft. above MSL			

14 DESIGN CONDITIONS

15	Design Fan Capacity	*	ACFM	Inlet Air Temperature °F	300	
16	Design Fan Capacity (min / max)	400 / 1000	SCFM @ 60°F	Air Temperature Range °F	See Note 6	
17	External Static Pressure (min / max)	20 / 80	inches WC	Air Density	See Note 6	lbs/ft^3
18	Total Static Pressure	*	inches WC	Fan Inlet Pressure	See Note 6	inches WC
19	Minimum Fan Efficiency	*	%	Fan Discharge Pressure	See Note 6	inches WC
20	Fan Operating Speed	*	RPM	Fan Motor Operating Weight	*	pounds
21	Power at Operating Conditions	*	BHP	Power at Inlet Temperature	*	BHP
22	Assembly wt -Mtr Fan Base	*	pounds	Max Temp. & Rate of Rise for Mech. Design	350 / 30	°F / °F/sec

23 CONSTRUCTION

24	Design Fan Manufacturer	*	Design Fan Model Number	*
25	AMCA Drive Arrangement	8	AMCA Inlet Box Position	*
26	AMCA Motor Position	Direct Drive	AMCA Discharge	Upblast
27	AMCA Rotation	CW (See Note 9)	Fan Scroll Type	SWSI

28 FAN WHEEL

29	Fan Wheel Type	See Note 4	Fan Shaft Diameter	*
30	Design Wheel Diameter	*	Actual Wheel Diameter	*
31	Design Wheel Width	*	Actual Wheel Width	*
32	Design Fan RPM	*	Actual Fan RPM	*
33	Design Brake Horsepower	*	Actual Brake Horsepower	*
34	Fan Bearing Type	*	Fan Bearing Designator	*

35 FAN MATERIALS

36	Housing	S/S 316L	Fan Wheel	S/S 316L
37	Evase	N/A	Mounting Frame	S/S 316L
38	Shaft	S/S 316L	Inlet Damper	N/A
39	Inlet Vane	N/A	Discharge Damper	N/A
40	Inlet Screen	N/A	Bearing Special Features	N/A
41	Mechanical Cou	Falk Flex-Type (or equal)	Safety Guards Types	OSHA Compatible

42 FAN ACCESSORIES

43	Flanged Inlet	Yes		Flanged Inlet Dimensions	*
44	Flanged Discharge	Yes		Flanged Discharge Dimensions	*
45	Flanged Discharge Evase		No	Flanged Evase Dimensions	N/A
46	Split Housing	Yes		Split Housing Type	*
47	Inlet Box		No	Inlet Box Type	N/A
48	Inlet Damper		No	Inlet damper Type	N/A
49	Inlet Damper Motor		No	Inlet Damper Mfr and Model No	N/A
50	Inspection Door	Yes		Inspection Door Size	*
51	Drain Connection	Yes		Drain Connection Size	See Spec.
52	Gas Tight Shaft Seals	Yes		Gas Tight Seal Type	*

HIGH-PRESSURE CENTRIFUGAL BLOWER Data Sheet:

24590-HLW-MAD-HOP-P0019

MR No.	24590-QL-MRA-MACS-00002
Plant Item No.	24590-HLW-MA-HOP-FAN-00001B
Rev. No.	0

1	Project:	RPP-WTP	Bldg./Room #	HLW / H-B001C	Manufacturer:	*
2	Project No:	24590	Supporting	DELETED		
3	Site:	DOE Hanford	Calculation		Manufacturer	*
4	Safety Class	SDS	Supporting	24590-HLW-M6-HOP-P0003	Part No:	
5	Seismic Category	SC-III	Drawings		Quantity Required	1
6	System No.	HOP	System Desc	24590-HLW-3YD-HOP-00001	Quality Level	QL2
7	Description: HLW Offgas Booster Fan					
8						

9 FAN ACCESSORIES (continued)

10	Isolation Base		No	Isolation Base Type	N/A
11				Isolation Base Manufacturer	N/A
12	Isolation Springs		No	Isolation Springs Mfr and Model No	N/A
13				Isolation Springs Minumum Diameter	N/A
14				Isolation Springs Deflection	N/A
15				Isolation Springs Restraint Features	N/A
16	Flexible Connection Inlet		Yes		
17	Flexible Connection Inlet Type		*		
18	Flexible Inlet Connection Material		*		
19	Flexible Connection Manufacturer and Model No		*		
20	Flexible Connection Outlet		Yes		
21	Flexible Connection Outlet Type		*		
22	Flexible Outlet Connection Material		*		
23	Flexible Connection Manufacturer and Model No		*		
24	Inlet Screen		No		
25	Inlet Screen Features	N/A			
26	Variable Speed Drive	Yes			
27	Special Drive Features	ASD to operate motor from 30% to 100% of required RPM within a 30 second time frame (max)			
28	Fan Pedestal	Yes			
29	Fan Pedestal Description	Common mounting base for fan, motor, and bearings			
30	Silencer	*			

31 MOTOR AND DRIVE REQUIREMENTS

32	NEMA Motor Horsepower	See Appendix 1		
33	Motor Synchronous RPM	See Appendix 1		
34	Motor Enclosure Type	See Appendix 1		
35	Frame Size	See Appendix 1		
36	Temperature Rise	See Appendix 1		
37	Bearings	See Appendix 1		
38	Bearing L-10 Life	300,000 hr. (min.)		
39	Insulation Class	See Appendix 1		
40	Conduit Box Construction	NEMA Type 4		
41	Space Heaters	See Appendix 1		
42	Mounting Base	*		
43	Special Motor Features	See Appendix 1		
44				
45	Disconnect Switch Provided	See Appendix 1		
46	Motor Pedestal	Yes		Common with fan.
47	Motor (Voltage/Phase/Frequency)	See Appendix 1		
48	Construction (Horiz/Vertical Shaft)	Horizontal Shaft		
49	Service Factor	See Appendix 1		
50	Running and Starting Duty	Continuous		
51	Bearing Lubrication	*		
52	Starting Method	*		
53	Assembly Position	*		

HIGH-PRESSURE CENTRIFUGAL BLOWER Data Sheet:

24590-HLW-MAD-HOP-P0019

MR No.	
24590-QL-MRA-MACS-00002	
Plant Item No.	Rev No.
24590-HLW-MA-HOP-FAN-00001B	0

1	Project:	RPP-WTP	Bldg./Room #	HLW / H-B001C	Manufacturer: *	
2	Project No·	24590	Supporting	DELETED		
3	Site:	DOE Hanford	Calculation		Manufacturer *	
4	Safety Class	SDS	Supporting	24590-HLW-M6-HOP-P0003	Part No·	
5	Seismic Category	SC-III	Drawings		Quantity Required	1
6	System No.	HOP	System Desc	24590-HLW-3YD-HOP-00001	Quality Level	QL2
7	Description: **HLW Offgas Booster Fan**					
8						

9 MOTOR AND DRIVE REQUIREMENTS

10	Coupling and Sheaves	**Falk Flex-Type (or equal)**
11	Test and Inspection Requirements	**See Appendix 1**
12		
13	Motor Shaft Size	**See Appendix 1**
14	Min Full Loaded Motor Efficiency	**See Appendix 1**
15		

16 Remarks:

17

18 1) * dentoes data to be provided by vendor.
19 2) N/A denotes "Not Applicable".
20 3) TBD denotes "To Be Determined" at a later date.
21 4) The impeller shall be anti-surge design developing continuously rising SP from free delivery thru shutoff.
22 5) Bounding dimensions not to exceed 45" w x 60" h x 80" l (Total Vendor Scope).
23 6) See Process Data Sheet 24590-HLW-MAD-HOP-00002 for Process Data and Effluent Definition.
24 7) See Specification 24590-WTP-3PS-MACS-TP004 for additional requirements.
25 8) Motor horsepower to be provided by vendor. Assume "cold-gas" conditions at startup.
26 9) Rotation is listed as viewed from drive side.
27 10) For technical requirements specific to the motors serving this equipment see the following Appendix 1.

28 29 30 31 32 33 34 35 36 37 38 39 40 41 42 43

MARYLAND STATE OF MARYLAND 0030952 REGISTERED PROFESSIONAL ENGINEER

3/19/04

EXPIRES 12/10/04

This bound document contains 5 pages

44 **Please note that source, special nuclear and byproduct materials, as defined in the Atomic Energy**
45 **Act of 1954 (AEA), are regulated at the U.S. Department of Energy (DOE) facilities exclusively by DOE**
46 **acting pursuant to its AEA authority. DOE asserts, that pursuant to the AEA, it has sole and**
47 **exclusive responsibility and authority to regulate source, special nuclear, and byproduct materials at**
48 **DOE-owned nuclear facilities. Information contained herein on radionuclides is provided for**
49 **process description purposes only.**
50

51						
52						
53	0	3/19/04	Issued for Permitting Use	Dale E. Green	M. Orina	
54	Rev	Date	Description	Originator	Checker	Approver

APPENDIX 1 **ELECTRICAL DATA SHEET** **LOW VOLTAGE INDUCTION MOTOR** **24590-HLW-MAD-HOP-P0019**	MR No **24590-QL-MRA-MACS-00002** Plant Item No **24590-HLW-MA-HOP-FAN-00001B -M**	Rev No. **0**

Driven Equipment No.: 24590-HLW-MA-HOP-FAN-00001B

Service:

Refer to "Primary Specification": 24590-WTP-3PS-MACS-TP004

LINE NO.	DESCRIPTION	USER SPECIFIED	SUPPLIER FURNISHED	UNITS
	BASIC DATA:			
1	RATED HORSEPOWER	*		HP
2	SYNCHRONOUS SPEED	*		RPM
3	VOLTAGE	460		V
4	PHASE	3		-
5	FREQUENCY	60		Hz
6	INSULATION CLASS	F		-
7	TEMPERATURE RISE ABOVE 40°C AMBIENT	80		deg. C
8	NEMA DESIGN TYPE (B, C, OTHER)	B		-
9	EFFICIENCY (STANDARD, PREMIUM)	PREMIUM		-
10	ENCLOSURE TYPE (TEFC - SEVERE DUTY PER IEEE Std 841, TENV, WP1I)	TEFC IEEE Std. 841		-
11	SERVICE FACTOR	1.15		-
12	COUPLED DRIVE (DIRECT, BELT, GEAR)	DIRECT		-
13	BEARING (ANTI-FRICTION/SLEEVE)	ANTI-FRICTION		-
14	BEARING SEAL (ONE END, BOTH ENDS)	BOTH ENDS		-
15	SPACE HEATER (FOR OUTDOOR MOTORS > 20 HP)	N/A		W
16	RTD FOR SLEEVE BEARING . 1 per bearing for Belt drive only	NO		Ω
17	TERMINAL BOX LOCATION	By Elect		-
18	WARRANTY (2 YEARS, 3 YEARS, 5 YEARS)	2		-
19	**SHOP TESTS**			
	- MFR STANDARD TEST (YES / NO)	YES		
	- ROUTINE TEST (YES / NO)	YES		
	- FULL TEST (YES / NO)	NO		
	UNUSUAL SERVICE CONDITIONS: (YES / NO)			
20	FLAMMABLE OR EXPLOSIVE GASES	NO		
21	COMBUSTIBLE, EXPLOSIVE, ABRASIVE OR CONDUCTIVE DUST	NO		
22	WET OR DRY OPERATING CONDITIONS	DRY		
23	NUCLEAR RADIATION	NO		
24	SPECIAL PAINTING REQUIREMENTS PER IEEE Std. 841	NO		
25	OTHER (SDC or SDS)	ITS - SDS		
26	OTHER (SEISMIC CATEGORY I , II, III or IV)	SC-III		

APPENDIX 1 **ELECTRICAL DATA SHEET** **LOW VOLTAGE INDUCTION MOTOR** **24590-HLW-MAD-HOP-P0019**	MR No. **24590-QL-MRA-MACS-00002** Plant Item No. **24590-HLW-MA-HOP-FAN-00001B -M**	Rev. No. **0**

Driven Equipment No.: 24590-HLW-MA-HOP-FAN-00001B

Service:

Refer to "Primary Specification": 24590-WTP-3PS-MACS-TP004

LINE NO.	DESCRIPTION	USER SPECIFIED	SUPPLIER FURNISHED	UNITS
27	MANUFACTURER	-		-
28	NEMA FRAME	-		-
29	MODEL NUMBER	-		-
30	SERIAL NUMBER / MANUFACTURER DATE	-		-
31	FULL LOAD SPEED	-		RPM
32	FULL LOAD CURRENT	-		A
33	FULL LOAD TORQUE	-		ft-lb
34	POWER FACTOR : - @ 50 % LOAD	-		%
	- @ 75 % LOAD	-		%
	- @ 100 % LOAD	-		%
35	EFFICIENCY . - @ 50% LOAD	-		%
	- @ 75% LOAD	-		%
	- @ 100% LOAD	-		%
36	LOCKED ROTOR CURRENT @ 100 % of RATED VOLTAGE	-		A
37	LOCKED ROTOR CURRENT @ 80% of RATED VOLTAGE	-		A
38	ALLOWABLE STALL TIME @ FULL VOLTAGE	-		SEC
39	ALLOWABLE STALL TIME @ 80% of VOLTAGE	-		SEC
40	LOSSES @ FULL LOAD	-		W
41	ROTOR WK2 @ MOTOR SHAFT SPEED (For > 250 hp only)	-		lb-ft²
42	STARTING POWER FACTOR (For > 75 hp only)	-		-
43	SUBTRANSIENT REACTANCE AND X/R (For > 75 hp only)	-		-
44	WEIGHT	-		lbs
45	ROTATION (CW, CCW, BI-DIR.) FACING DRIVEN EQUIPMENT	-		-
46	MEAN TIME BETWEEN FAILURE (MOTOR 100 HP AND ABOVE)			
47	STARTING METHOD (FULL/REDUCED VOLTAGE, ASD APPLICATION)	-		-
48	MEAN TIME BETWEEN FAILURE (MOTOR 100 HP AND ABOVE)	-		
49	RECOMMENDED BEARING LUBRICANT	-		
50	INVERTER DUTY RATED	YES		-

NOTES:

1) This Datasheet is for all motors except for Cranes, Hoists, Elevators and Submersible Motors. Motors less than ½ HP shall be Supplier's standard 115 V, 1 Ph, totally enclosed, preferably 1800 rpm.
2) Motor should be applied within its rating based on service factor of 1.0.
3) Data Sheet Line no. from 34 to 46 are applicable for motor 100 HP and above.
4) * denotes data to be provided by vendor.
5) DELETED

R10272781

HIGH-PRESSURE CENTRIFUGAL BLOWER Data Sheet:

24590-HLW-MAD-HOP-P0020

MR No	24590-QL-MRA-MACS-00002
Plant Item No	24590-HLW-MA-HOP-FAN-00001C
Rev. No.	0

1	Project:	RPP-WTP	Bldg./Room #	HLW / H-B001C	Manufacturer:	*
2	Project No.	24590	Supporting	DELETED		
3	Site:	DOE Hanford	Calculation		Manufacturer	
4	Safety Class	SDS	Supporting	24590-HLW-M6-HOP-P0003	Part No·	
5	Seismic Category	SC-III	Drawings		Quantity Required	1
6	System No.	HOP	System Desc	24590-HLW-3YD-HOP-00001	Quality Level	QL2
7	Description. HLW Offgas Booster Fan					
8						

ISSUED BY RPP-WTP PDC INIT DATE

9 DESIGN TEMPERATURES

10	Zone Design Temperature	Summer °F	95					
11	Indoor Design Temperature	Minimum °F	59	Maximum °F	95	Relative Humidity	10%	(min.)
12								
13	Contamination Classification Area	DELETED	Elevation:	661	Ft. above MSL			

14 DESIGN CONDITIONS

15	Design Fan Capacity	*	ACFM	Inlet Air Temperature °F	300	
16	Design Fan Capacity (min / max)	400 / 1000	SCFM @ 60°F	Air Temperature Range °F	See Note 6	
17	External Static Pressure (min / max)	20 / 80	inches WC	Air Density	See Note 6	lbs/ft^3
18	Total Static Pressure	*	inches WC	Fan Inlet Pressure	See Note 6	inches WC
19	Minimum Fan Efficiency	*	%	Fan Discharge Pressure	See Note 6	inches WC
20	Fan Operating Speed	*	RPM	Fan Motor Operating Weight	*	pounds
21	Power at Operating Conditions	*	BHP	Power at Inlet Temperature	*	BHP
22	Assembly wt -Mtr Fan Base	*	pounds	Max. Temp. & Rate of Rise for Mech. Design	350 / 30	°F / °F/sec

23 CONSTRUCTION

24	Design Fan Manufacturer	*	Design Fan Model Number	*
25	AMCA Drive Arrangement	8	AMCA Inlet Box Position	*
26	AMCA Motor Position	Direct Drive	AMCA Discharge	Upblast
27	AMCA Rotation	CW (See Note 9)	Fan Scroll Type	SWSI

28 FAN WHEEL

29	Fan Wheel Type	See Note 4	Fan Shaft Diameter	*
30	Design Wheel Diameter	*	Actual Wheel Diameter	*
31	Design Wheel Width	*	Actual Wheel Width	*
32	Design Fan RPM	*	Actual Fan RPM	*
33	Design Brake Horsepower	*	Actual Brake Horsepower	*
34	Fan Bearing Type	*	Fan Bearing Designator	*

35 FAN MATERIALS

36	Housing	S/S 316L	Fan Wheel	S/S 316L
37	Evase	N/A	Mounting Frame	S/S 316L
38	Shaft	S/S 316L	Inlet Damper	N/A
39	Inlet Vane	N/A	Discharge Damper	N/A
40	Inlet Screen	N/A	Bearing Special Features	N/A
41	Mechanical Coupling	Falk Flex-Type (or equal)	Safety Guards Types	OSHA Compatible

42 FAN ACCESSORIES

43	Flanged Inlet	Yes		Flanged Inlet Dimensions	*
44	Flanged Discharge	Yes		Flanged Discharge Dimensions	*
45	Flanged Discharge Evase		No	Flanged Evase Dimensions	N/A
46	Split Housing	Yes		Split Housing Type	*
47	Inlet Box		No	Inlet Box Type	N/A
48	Inlet Damper		No	Inlet damper Type	N/A
49	Inlet Damper Motor		No	Inlet Damper Mfr and Model No	N/A
50	Inspection Door	Yes		Inspection Door Size	*
51	Drain Connection	Yes		Drain Connection Size	See Spec.
52	Gas Tight Shaft Seals	Yes		Gas Tight Seal Type	*

HIGH-PRESSURE CENTRIFUGAL BLOWER Data Sheet:

24590-HLW-MAD-HOP-P0020

MR No.	24590-QL-MRA-MACS-00002
Plant Item No	24590-HLW-MA-HOP-FAN-00001C
Rev No.	0

1	Project:	RPP-WTP	Bldg /Room #	HLW / H-B001C	Manufacturer:	*
2	Project No:	24590	Supporting Calculation	DELETED		
3	Site:	DOE Hanford			Manufacturer Part No.	*
4	Safety Class	SDS	Supporting Drawings	24590-HLW-M6-HOP-P0003		
5	Seismic Category	SC-III			Quantity Required	1
6	System No	HOP	System Desc	24590-HLW-3YD-HOP-00001	Quality Level	QL2
7	Description: HLW Offgas Booster Fan					
8						

9 FAN ACCESSORIES (continued)

10	Isolation Base		No	Isolation Base Type	N/A
11				Isolation Base Manufacturer	N/A
12	Isolation Springs		No	Isolation Springs Mfr and Model No	N/A
13				Isolation Springs Minumum Diameter	N/A
14				Isolation Springs Deflection	N/A
15				Isolation Springs Restraint Features	N/A
16	Flexible Connection Inlet		Yes		
17	Flexible Connection Inlet Type		*		
18	Flexible Inlet Connection Material		*		
19	Flexible Connection Manufacturer and Model No		*		
20	Flexible Connection Outlet		Yes		
21	Flexible Connection Outlet Type		*		
22	Flexible Outlet Connection Material		*		
23	Flexible Connection Manufacturer and Model No		*		
24	Inlet Screen		No		
25	Inlet Screen Features	N/A			
26	Variable Speed Drive	Yes			
27	Special Drive Features	ASD to operate motor from 30% to 100% of required RPM within a 30 second time frame (max)			
28	Fan Pedestal	Yes			
29	Fan Pedestal Description	Common mounting base for fan, motor, and bearings			
30	Silencer	*			

31 MOTOR AND DRIVE REQUIREMENTS

32	NEMA Motor Horsepower	See Appendix 1		
33	Motor Synchronous RPM	See Appendix 1		
34	Motor Enclosure Type	See Appendix 1		
35	Frame Size	See Appendix 1		
36	Temperature Rise	See Appendix 1		
37	Bearings	See Appendix 1		
38	Bearing L-10 Life	300,000 hr. (min.)		
39	Insulation Class	See Appendix 1		
40	Conduit Box Construction	NEMA Type 4		
41	Space Heaters	See Appendix 1		
42	Mounting Base	*		
43	Special Motor Features	See Appendix 1		
44				
45	Disconnect Switch Provided	Yes		
46	Motor Pedestal	Yes		Common with fan.
47	Motor (Voltage/Phase/Frequency)	See Appendix 1		
48	Construction (Horiz/Vertical Shaft)	Horizontal Shaft		
49	Service Factor	See Appendix 1		
50	Running and Starting Duty	Continuous		
51	Bearing Lubrication	*		
52	Starting Method	*		
53	Assembly Position	*		

HIGH-PRESSURE CENTRIFUGAL BLOWER Data Sheet:

24590-HLW-MAD-HOP-P0020

MR No.	
24590-QL-MRA-MACS-00002	
Plant Item No.	Rev. No.
24590-HLW-MA-HOP-FAN-00001C	0

1	Project:	RPP-WTP	Bldg./Room #	HLW / H-B001C	Manufacturer:	*
2	Project No:	24590	Supporting	DELETED		
3	Site:	DOE Hanford	Calculation		Manufacturer	*
4	Safety Class	SDS	Supporting	24590-HLW-M6-HOP-P0003	Part No:	
5	Seismic Category	SC-III	Drawings		Quantity Required	1
6	System No.	HOP	System Desc	24590-HLW-3YD-HOP-00001	Quality Level	QL2
7	Description: **HLW Offgas Booster Fan**					
8						

9 MOTOR AND DRIVE REQUIREMENTS

10	Coupling and Sheaves	**Falk Flex-Type (or equal)**
11	Test and Inspection Requirements	**See Appendix 1**
12		
13	Motor Shaft Size	**See Appendix 1**
14	Min Full Loaded Motor Efficiency	**See Appendix 1**
15		

16 Remarks:

17

18 1) * dentoes data to be provided by vendor.

19 2) N/A denotes "Not Applicable".

20 3) TBD denotes "To Be Determined" at a later date.

21 4) The impeller shall be anti-surge design developing continuously rising SP from free delivery thru shutoff.

22 5) Bounding dimensions not to exceed 45" w x 60" h x 80" l (Total Vendor Scope).

23 6) See Process Data Sheet 24590-HLW-MAD-HOP-00003 for Process Data and Effluent Definition.

24 7) See Specification 24590-WTP-3PS-MACS-TP004 for additional requirements.

25 8) Motor horsepower to be provided by vendor Assume "cold-gas" conditions at startup.

26 9) Rotation is listed as viewed from drive side.

27 10) For technical requirements specific to the motors serving this equipment see the following Appendix 1

28 29 30 31 32 33 34 35 36 37 38 39 40 41 42 43

MARK W. HOFFMANN
STATE OF WASHINGTON
0030952
REGISTERED
PROFESSIONAL ENGINEER

3/19/04

EXPIRES 12/10/04

This bound document contains 5 pages

44 **Please note that source, special nuclear and byproduct materials, as defined in the Atomic Energy Act of 1954 (AEA), are regulated at the U.S. Department of Energy (DOE) facilities exclusively by DOE acting pursuant to its AEA authority. DOE asserts, that pursuant to the AEA, it has sole and exclusive responsibility and authority to regulate source, special nuclear, and byproduct materials at DOE-owned nuclear facilities. Information contained herein on radionuclides is provided for process description purposes only.**

45 46 47 48 49 50

51						
52						
53	0	3/19/04	Issued for Permit Use	Nate E. Green	M. Ordona	Hoffman
54	Rev	Date	Description	Originator	Checker	Approver

APPENDIX 1 **ELECTRICAL DATA SHEET** **LOW VOLTAGE INDUCTION MOTOR** **24590-HLW-MAD-HOP-P0020**	MR No. **24590-QL-MRA-MACS-00002** Plant Item No. **24590-HLW-MA-HOP-FAN-00001C -M**	Rev. No. **0**

Driven Equipment No.: 24590-HLW-MA-HOP-FAN-00001C

Service:

Refer to "Primary Specification": 24590-WTP-3PS-MACS-TP004

LINE NO.	DESCRIPTION	USER SPECIFIED	SUPPLIER FURNISHED	UNITS
	BASIC DATA:			
1	RATED HORSEPOWER	*		HP
2	SYNCHRONOUS SPEED	*		RPM
3	VOLTAGE	460		V
4	PHASE	3		-
5	FREQUENCY	60		Hz
6	INSULATION CLASS	F		-
7	TEMPERATURE RISE ABOVE 40°C AMBIENT	80		deg. C
8	NEMA DESIGN TYPE (B, C, OTHER)	B		-
9	EFFICIENCY (STANDARD, PREMIUM)	PREMIUM		-
10	ENCLOSURE TYPE (TEFC - SEVERE DUTY PER IEEE Std. 841, TENV, WPII)	TEFC IEEE Std. 841		-
11	SERVICE FACTOR	1 15		-
12	COUPLED DRIVE (DIRECT, BELT, GEAR)	DIRECT		-
13	BEARING (ANTI-FRICTION/SLEEVE)	ANTI-FRICTION		-
14	BEARING SEAL (ONE END, BOTH ENDS)	BOTH ENDS		-
15	SPACE HEATER (FOR OUTDOOR MOTORS > 20 HP)	N/A		W
16	RTD FOR SLEEVE BEARING : 1 per bearing for Belt drive only	NO		Ω
17	TERMINAL BOX LOCATION	By Elect		-
18	WARRANTY (2 YEARS, 3 YEARS, 5 YEARS)	2		-
19	**SHOP TESTS**			
	- MFR STANDARD TEST (YES / NO)	YES		
	- ROUTINE TEST (YES / NO)	YES		
	- FULL TEST (YES / NO)	NO		
	UNUSUAL SERVICE CONDITIONS: (YES / NO)			
20	FLAMMABLE OR EXPLOSIVE GASES	NO		
21	COMBUSTIBLE, EXPLOSIVE, ABRASIVE OR CONDUCTIVE DUST	NO		
22	WET OR DRY OPERATING CONDITIONS	DRY		
23	NUCLEAR RADIATION	NO		
24	SPECIAL PAINTING REQUIREMENTS PER IEEE Std. 841	NO		
25	OTHER (SDC or SDS)	ITS - SDS		
26	OTHER (SEISMIC CATEGORY I , II, III or IV)	SC-III		

APPENDIX 1 **ELECTRICAL DATA SHEET** **LOW VOLTAGE INDUCTION MOTOR** **24590-HLW-MAD-HOP-P0020**	MR No. **24590-QL-MRA-MACS-00002** Plant Item No. **24590-HLW-MA-HOP-FAN-00001C -M**	Rev. No. **0**

Driven Equipment No.: 24590-HLW-MA-HOP-FAN-00001C

Service:

Refer to "Primary Specification": 24590-WTP-3PS-MACS-TP004

LINE NO.	DESCRIPTION	USER SPECIFIED	SUPPLIER FURNISHED	UNITS
27	MANUFACTURER	-		-
28	NEMA FRAME	-		-
29	MODEL NUMBER	-		-
30	SERIAL NUMBER / MANUFACTURER DATE	-		-
31	FULL LOAD SPEED	-		RPM
32	FULL LOAD CURRENT	-		A
33	FULL LOAD TORQUE	-		ft-lb
34	POWER FACTOR : - @ 50 % LOAD	-		%
	- @ 75 % LOAD	-		%
	- @ 100 % LOAD	-		%
35	EFFICIENCY : - @ 50% LOAD	-		%
	- @ 75% LOAD	-		%
	- @ 100% LOAD	-		%
36	LOCKED ROTOR CURRENT @ 100 % of RATED VOLTAGE	-		A
37	LOCKED ROTOR CURRENT @ 80% of RATED VOLTAGE	-		A
38	ALLOWABLE STALL TIME @ FULL VOLTAGE	-		SEC
39	ALLOWABLE STALL TIME @ 80% of VOLTAGE	-		SEC
40	LOSSES @ FULL LOAD	-		W
41	ROTOR WK2 @ MOTOR SHAFT SPEED (For > 250 hp only)	-		lb-ft²
42	STARTING POWER FACTOR (For > 75 hp only)	-		-
43	SUBTRANSIENT REACTANCE AND X/R (For > 75 hp only)	-		-
44	WEIGHT	-		lbs
45	ROTATION (CW, CCW, BI-DIR.) FACING DRIVEN EQUIPMENT	-		-
46	MEAN TIME BETWEEN FAILURE (MOTOR 100 HP AND ABOVE)			
47	STARTING METHOD (FULL/REDUCED VOLTAGE, ASD APPLICATION)	-		-
48	MEAN TIME BETWEEN FAILURE (MOTOR 100 HP AND ABOVE)	-		
49	RECOMMENDED BEARING LUBRICANT	-		
50	INVERTER DUTY RATED	YES		-

NOTES:

1) This Datasheet is for all motors except for Cranes, Hoists, Elevators and Submersible Motors. Motors less than ½ HP shall be Supplier's standard 115 V, 1 Ph, totally enclosed, preferably 1800 rpm.
2) Motor should be applied within its rating based on service factor of 1.0.
3) Data Sheet Line no. from 34 to 46 are applicable for motor 100 HP and above.
4) * denotes data to be provided by vendor.
5) DELETED

R10272782

HIGH-PRESSURE CENTRIFUGAL BLOWER Data Sheet:

24590-HLW-MAD-HOP-P0035

MR No. **24590-QL-MRA-MACS-00002**

Plant Item No. **24590-HLW-MA-HOP-FAN-00009A** | Rev. No **0**

1	Project:	RPP-WTP	Bldg./Room #	**HLW / H-B001C**	Manufacturer:	ISSUED BY RPP-WTP PDC 3/19/01 INIT DATE
2	Project No:	24590	Supporting Calculation	**DELETED**		
3	Site.	DOE Hanford			Manufacturer Part No:	
4	Safety Class	**SDS**	Supporting Drawings	**24590-HLW-M6-HOP-P20003**		
5	Seismic Category	**SC-III**			Quantity Required	**1**
6	System No.	**HOP**	System Desc	**24590-HLW-3YD-HOP-00001**	Quality Level	**QL2**
7	Description: **HLW Offgas Booster Fan**					
8						

9 DESIGN TEMPERATURES

10	Zone Design Temperature	Summer °F	**95**					
11	Indoor Design Temperature	Minimum °F	**59**	Maximum °F	**95**	Relative Humidity	**10%**	(min.)
12								
13	Contamination Classification Area	**DELETED**	Elevation:	**661**	Ft. above MSL			

14 DESIGN CONDITIONS

15	Design Fan Capacity	*	ACFM	Inlet Air Temperature °F	**300**	
16	Design Fan Capacity (min / max)	**400 / 1000**	SCFM @ 60°F	Air Temperature Range °F	**See Note 6**	
17	External Static Pressure (min / max)	**20 / 80**	inches WC	Air Density	**See Note 6**	lbs/ft^3
18	Total Static Pressure	*	inches WC	Fan Inlet Pressure	**See Note 6**	inches WC
19	Minimum Fan Efficiency	*	%	Fan Discharge Pressure	**See Note 6**	inches WC
20	Fan Operating Speed	*	RPM	Fan Motor Operating Weight	*	pounds
21	Power at Operating Conditions	*	BHP	Power at Inlet Temperature	*	BHP
22	Assembly wt -Mtr Fan Base	*	pounds	Max Temp. & Rate of Rise for Mech. Design	**350 / 30**	°F / °F/sec

23 CONSTRUCTION

24	Design Fan Manufacturer	*	Design Fan Model Number	*
25	AMCA Drive Arrangement	**8**	AMCA Inlet Box Position	*
26	AMCA Motor Position	**Direct Drive**	AMCA Discharge	**Upblast**
27	AMCA Rotation	**CW (See Note 9)**	Fan Scroll Type	**SWSI**

28 FAN WHEEL

29	Fan Wheel Type	**See Note 4**	Fan Shaft Diameter	*
30	Design Wheel Diameter	*	Actual Wheel Diameter	*
31	Design Wheel Width	*	Actual Wheel Width	*
32	Design Fan RPM	*	Actual Fan RPM	*
33	Design Brake Horsepower	*	Actual Brake Horsepower	*
34	Fan Bearing Type	*	Fan Bearing Designator	*

35 FAN MATERIALS

36	Housing	**S/S 316L**	Fan Wheel	**S/S 316L**
37	Evase	**N/A**	Mounting Frame	**S/S 316L**
38	Shaft	**S/S 316L**	Inlet Damper	**N/A**
39	Inlet Vane	**N/A**	Discharge Damper	**N/A**
40	Inlet Screen	**N/A**	Bearing Special Features	**N/A**
41	Mechanical Coupling	**Falk Flex-Type (or equal)**	Safety Guards Types	**OSHA Compatible**

42 FAN ACCESSORIES

43	Flanged Inlet	**Yes**		Flanged Inlet Dimensions	*
44	Flanged Discharge	**Yes**		Flanged Discharge Dimensions	*
45	Flanged Discharge Evase		**No**	Flanged Evase Dimensions	**N/A**
46	Split Housing	**Yes**		Split Housing Type	*
47	Inlet Box		**No**	Inlet Box Type	**N/A**
48	Inlet Damper		**No**	Inlet damper Type	**N/A**
49	Inlet Damper Motor		**No**	Inlet Damper Mfr and Model No	**N/A**
50	Inspection Door	**Yes**		Inspection Door Size	*
51	Drain Connection	**Yes**		Drain Connection Size	**See Spec.**
52	Gas Tight Shaft Seals	**Yes**		Gas Tight Seal Type	*

HIGH-PRESSURE CENTRIFUGAL BLOWER Data Sheet:

24590-HLW-MAD-HOP-P0035

MR No.
24590-QL-MRA-MACS-00002

Plant Item No.
24590-HLW-MA-HOP-FAN-00009A

Rev. No.
0

1	Project:	RPP-WTP	Bldg./Room #	**HLW / H-B001C**	Manufacturer:	*
2	Project No:	24590	Supporting	**DELETED**		
3	Site:	DOE Hanford	Calculation		Manufacturer	*
4	Safety Class	**SDS**	Supporting	**24590-HLW-M6-HOP-P20003**	Part No.	
5	Seismic Category	**SC-III**	Drawings		Quantity Required	**1**
6	System No.	**HOP**	System Desc	**24590-HLW-3YD-HOP-00001**	Quality Level	**QL2**
7	Description: **HLW Offgas Booster Fan**					
8						

9 FAN ACCESSORIES (continued)

10	Isolation Base		**No**	Isolation Base Type	**N/A**
11				Isolation Base Manufacturer	**N/A**
12	Isolation Springs		**No**	Isolation Springs Mfr and Model No	**N/A**
13				Isolation Springs Minumum Diameter	**N/A**
14				Isolation Springs Deflection	**N/A**
15				Isolation Springs Restraint Features	**N/A**
16	Flexible Connection Inlet		**Yes**		
17	Flexible Connection Inlet Type		*		
18	Flexible Inlet Connection Material		*		
19	Flexible Connection Manufacturer and Model No		*		
20	Flexible Connection Outlet		**Yes**		
21	Flexible Connection Outlet Type		*		
22	Flexible Outlet Connection Material		*		
23	Flexible Connection Manufacturer and Model No		*		
24	Inlet Screen		**No**		
25	Inlet Screen Features	**N/A**			
26	Variable Speed Drive	**Yes**			
27	Special Drive Features	**ASD to operate motor from 30% to 100% of required RPM within a 30 second time frame (max)**			
28	Fan Pedestal	**Yes**			
29	Fan Pedestal Description	**Common mounting base for fan, motor, and bearings**			
30	Silencer	*			

31 MOTOR AND DRIVE REQUIREMENTS

32	NEMA Motor Horsepower	**See Appendix 1**		
33	Motor Synchronous RPM	**See Appendix 1**		
34	Motor Enclosure Type	**See Appendix 1**		
35	Frame Size	**See Appendix 1**		
36	Temperature Rise	**See Appendix 1**		
37	Bearings	**See Appendix 1**		
38	Bearing L-10 Life	**300,000 hr. (min.)**		
39	Insulation Class	**See Appendix 1**		
40	Conduit Box Construction	**NEMA Type 4**		
41	Space Heaters	**See Appendix 1**		
42	Mounting Base	*		
43	Special Motor Features	**See Appendix 1**		
44				
45	Disconnect Switch Provided	**Yes**		
46	Motor Pedestal	**Yes**		**Common with fan.**
47	Motor (Voltage/Phase/Frequency)	**See Appendix 1**		
48	Construction (Horiz/Vertical Shaft)	**Horizontal Shaft**		
49	Service Factor	**See Appendix 1**		
50	Running and Starting Duty	**Continuous**		
51	Bearing Lubrication	*		
52	Starting Method	*		
53	Assembly Position	*		

HIGH-PRESSURE CENTRIFUGAL BLOWER Data Sheet:

24590-HLW-MAD-HOP-P0035

MR No.	
24590-QL-MRA-MACS-00002	
Plant Item No.	Rev. No.
24590-HLW-MA-HOP-FAN-00009A	0

1	Project:	RPP-WTP	Bldg./Room #	HLW / H-B001C	Manufacturer: *	
2	Project No:	24590	Supporting Calculation	DELETED		
3	Site:	DOE Hanford			Manufacturer Part No: *	
4	Safety Class	SDS	Supporting Drawings	24590-HLW-M6-HOP-P20003		
5	Seismic Category	SC-III			Quantity Required	1
6	System No.	HOP	System Desc	24590-HLW-3YD-HOP-00001	Quality Level	QL2
7	Description: HLW Offgas Booster Fan					
8						

9 MOTOR AND DRIVE REQUIREMENTS

10	Coupling and Sheaves	Falk Flex-Type (or equal)
11	Test and Inspection Requirements	See Appendix 1
12		
13	Motor Shaft Size	See Appendix 1
14	Min Full Loaded Motor Efficiency	See Appendix 1
15		

16 Remarks:

17

18 1) * dentoes data to be provided by vendor.
19 2) N/A denotes "Not Applicable".
20 3) TBD denotes "To Be Determined" at a later date.
21 4) The impeller shall be anti-surge design developing continuously rising SP from free delivery thru shutoff.
22 5) Bounding dimensions not to exceed 45" w x 60" h x 80" l (Total Vendor Scope).
23 6) See Process Data Sheet 24590-HLW-MAD-HOP-00029 for Process Data and Effluent Definition.
24 7) See Specification 24590-WTP-3PS-MACS-TP004 for additional requirements.
25 8) Motor horsepower to be provided by vendor. Assume "cold-gas" conditions at startup.
26 9) Rotation is listed as viewed from drive side.
27 10) For technical requirements specific to the motors serving this equipment see the following Appendix 1.

MARK W. HOFFMANN
STATE OF WASHINGTON
0030952
REGISTERED
PROFESSIONAL ENGINEER
3/19/04

EXPIRES 12/10/04

This bound document contains 5 pages

Please note that source, special nuclear and byproduct materials, as defined in the Atomic Energy Act of 1954 (AEA), are regulated at the U.S. Department of Energy (DOE) facilities exclusively by DOE acting pursuant to its AEA authority. DOE asserts, that pursuant to the AEA, it has sole and exclusive responsibility and authority to regulate source, special nuclear, and byproduct materials at DOE-owned nuclear facilities. Information contained herein on radionuclides is provided for process description purposes only.

Rev	Date	Description	Originator	Checker	Approver
0	3/19/04	Issued for Permitting Use			

APPENDIX 1 **ELECTRICAL DATA SHEET** **LOW VOLTAGE INDUCTION MOTOR** **24590-HLW-MAD-HOP-P0035**	MR No. **24590-QL-MRA-MACS-00002** Plant Item No. **24590-HLW-MA-HOP-FAN-00009A -M**	Rev. No **0**

Driven Equipment No.: 24590-HLW-MA-HOP-FAN-00009A

Service:

Refer to "Primary Specification": 24590-WTP-3PS-MACS-TP004

LINE NO.	DESCRIPTION	USER SPECIFIED	SUPPLIER FURNISHED	UNITS
	BASIC DATA:			
1	RATED HORSEPOWER	*		HP
2	SYNCHRONOUS SPEED	*		RPM
3	VOLTAGE	460		V
4	PHASE	3		-
5	FREQUENCY	60		Hz
6	INSULATION CLASS	F		-
7	TEMPERATURE RISE ABOVE 40°C AMBIENT	80		deg. C
8	NEMA DESIGN TYPE (B, C, OTHER)	B		-
9	EFFICIENCY (STANDARD, PREMIUM)	PREMIUM		-
10	ENCLOSURE TYPE (TEFC - SEVERE DUTY PER IEEE Std. 841, TENV, WP1I)	TEFC IEEE Std. 841		-
11	SERVICE FACTOR	1.15		-
12	COUPLED DRIVE (DIRECT, BELT, GEAR)	DIRECT		-
13	BEARING (ANTI-FRICTION/SLEEVE)	ANTI-FRICTION		-
14	BEARING SEAL (ONE END, BOTH ENDS)	BOTH ENDS		-
15	SPACE HEATER (FOR OUTDOOR MOTORS > 20 HP)	N/A		W
16	RTD FOR SLEEVE BEARING : 1 per bearing for Belt drive only	NO		Ω
17	TERMINAL BOX LOCATION	By Elect		-
18	WARRANTY (2 YEARS, 3 YEARS, 5 YEARS)	2		-
19	**SHOP TESTS**			
	- MFR STANDARD TEST (YES / NO)	YES		
	- ROUTINE TEST (YES / NO)	YES		
	- FULL TEST (YES / NO)	NO		
	UNUSUAL SERVICE CONDITIONS: (YES / NO)			
20	FLAMMABLE OR EXPLOSIVE GASES	NO		
21	COMBUSTIBLE, EXPLOSIVE, ABRASIVE OR CONDUCTIVE DUST	NO		
22	WET OR DRY OPERATING CONDITIONS	DRY		
23	NUCLEAR RADIATION	NO		
24	SPECIAL PAINTING REQUIREMENTS PER IEEE Std. 841	NO		
25	OTHER (SDC or SDS)	ITS - SDS		
26	OTHER (SEISMIC CATEGORY I , II, III or IV)	SC-III		

APPENDIX 1 **ELECTRICAL DATA SHEET** **LOW VOLTAGE INDUCTION MOTOR** **24590-HLW-MAD-HOP-P0035**	MR No. **24590-QL-MRA-MACS-00002** Plant Item No. **24590-HLW-MA-HOP-FAN-00009A -M**	Rev. No. **0**

Driven Equipment No.: 24590-HLW-MA-HOP-FAN-00009A

Service:

Refer to "Primary Specification": 24590-WTP-3PS-MACS-TP004

LINE NO.	DESCRIPTION	USER SPECIFIED	SUPPLIER FURNISHED	UNITS
27	MANUFACTURER	-		-
28	NEMA FRAME	-		-
29	MODEL NUMBER	-		-
30	SERIAL NUMBER / MANUFACTURER DATE	-		-
31	FULL LOAD SPEED	-		RPM
32	FULL LOAD CURRENT	-		A
33	FULL LOAD TORQUE	-		ft-lb
34	POWER FACTOR : - @ 50 % LOAD	-		%
	- @ 75 % LOAD	-		%
	- @ 100 % LOAD	-		%
35	EFFICIENCY . - @ 50% LOAD	-		%
	- @ 75% LOAD	-		%
	- @ 100% LOAD	-		%
36	LOCKED ROTOR CURRENT @ 100 % of RATED VOLTAGE	-		A
37	LOCKED ROTOR CURRENT @ 80% of RATED VOLTAGE	-		A
38	ALLOWABLE STALL TIME @ FULL VOLTAGE	-		SEC
39	ALLOWABLE STALL TIME @ 80% of VOLTAGE	-		SEC
40	LOSSES @ FULL LOAD	-		W
41	ROTOR WK2 @ MOTOR SHAFT SPEED (For > 250 hp only)	-		lb-ft²
42	STARTING POWER FACTOR (For > 75 hp only)	-		-
43	SUBTRANSIENT REACTANCE AND X/R (For > 75 hp only)	-		-
44	WEIGHT	-		lbs
45	ROTATION (CW, CCW, BI-DIR.) FACING DRIVEN EQUIPMENT	-		-
46	MEAN TIME BETWEEN FAILURE (MOTOR 100 HP AND ABOVE)			
47	STARTING METHOD (FULL/REDUCED VOLTAGE, ASD APPLICATION)	-		-
48	MEAN TIME BETWEEN FAILURE (MOTOR 100 HP AND ABOVE)	-		
49	RECOMMENDED BEARING LUBRICANT	-		
50	INVERTER DUTY RATED	YES		-

NOTES:

1) This Datasheet is for all motors except for Cranes, Hoists, Elevators and Submersible Motors. Motors less than ½ HP shall be Supplier's standard 115 V, 1 Ph, totally enclosed, preferably 1800 rpm.
2) Motor should be applied within its rating based on service factor of 1.0.
3) Data Sheet Line no. from 34 to 46 are applicable for motor 100 HP and above.
4) * denotes data to be provided by vendor.
5) DELETED

R10272783

HIGH-PRESSURE CENTRIFUGAL BLOWER Data Sheet:

24590-HLW-MAD-HOP-P0036

MR No	24590-QL-MRA-MACS-00002
Plant Item No.	24590-HLW-MA-HOP-FAN-00009B
Rev. No.	0

1	Project:	RPP-WTP	Bldg./Room #	HLW / H-B001C	Manufacturer:	*
2	Project No:	24590	Supporting	DELETED		
3	Site	DOE Hanford	Calculation		Manufacturer	
4	Safety Class	SDS	Supporting	24590-HLW-M6-HOP-P20003	Part No:	
5	Seismic Category	SC-III	Drawings		Quantity Required	1
6	System No.	HOP	System Desc	24590-HLW-3YD-HOP-00001	Quality Level	QL2
7	Description:	HLW Offgas Booster Fan				
8						

ISSUED BY RPP-WTP PDC 3/19/01 INIT DATE

9 DESIGN TEMPERATURES

10	Zone Design Temperature	Summer °F	95					
11	Indoor Design Temperature	Minimum °F	59	Maximum °F	95	Relative Humidity	10%	(min.)
12								
13	Contamination Classification Area	DELETED	Elevation:	661	Ft. above MSL			

14 DESIGN CONDITIONS

15	Design Fan Capacity	*	ACFM	Inlet Air Temperature °F	300	
16	Design Fan Capacity (min / max)	400 / 1000	SCFM @ 60°F	Air Temperature Range °F	See Note 6	
17	External Static Pressure (min / max)	20 / 80	inches WC	Air Density	See Note 6	lbs/ft^3
18	Total Static Pressure	*	inches WC	Fan Inlet Pressure	See Note 6	inches WC
19	Minimum Fan Efficiency	*	%	Fan Discharge Pressure	See Note 6	inches WC
20	Fan Operating Speed	*	RPM	Fan Motor Operating Weight	*	pounds
21	Power at Operating Conditions	*	BHP	Power at Inlet Temperature	*	BHP
22	Assembly wt -Mtr Fan Base	*	pounds	Max. Temp. & Rate of Rise for Mech. Design	350 / 30	°F / °F/sec

23 CONSTRUCTION

24	Design Fan Manufacturer	*	Design Fan Model Number	*
25	AMCA Drive Arrangement	8	AMCA Inlet Box Position	*
26	AMCA Motor Position	Direct Drive	AMCA Discharge	Upblast
27	AMCA Rotation	CW (See Note 9)	Fan Scroll Type	SWSI

28 FAN WHEEL

29	Fan Wheel Type	See Note 4	Fan Shaft Diameter	*
30	Design Wheel Diameter	*	Actual Wheel Diameter	*
31	Design Wheel Width	*	Actual Wheel Width	*
32	Design Fan RPM	*	Actual Fan RPM	*
33	Design Brake Horsepower	*	Actual Brake Horsepower	*
34	Fan Bearing Type	*	Fan Bearing Designator	*

35 FAN MATERIALS

36	Housing	S/S 316L	Fan Wheel	S/S 316L
37	Evase	N/A	Mounting Frame	S/S 316L
38	Shaft	S/S 316L	Inlet Damper	N/A
39	Inlet Vane	N/A	Discharge Damper	N/A
40	Inlet Screen	N/A	Bearing Special Features	N/A
41	Mechanical Coupling	Falk Flex-Type (or equal)	Safety Guards Types	OSHA Compatible

42 FAN ACCESSORIES

43	Flanged Inlet	Yes		Flanged Inlet Dimensions	*
44	Flanged Discharge	Yes		Flanged Discharge Dimensions	*
45	Flanged Discharge Evase		No	Flanged Evase Dimensions	N/A
46	Split Housing	Yes		Split Housing Type	*
47	Inlet Box		No	Inlet Box Type	N/A
48	Inlet Damper		No	Inlet damper Type	N/A
49	Inlet Damper Motor		No	Inlet Damper Mfr and Model No	N/A
50	Inspection Door	Yes		Inspection Door Size	*
51	Drain Connection	Yes		Drain Connection Size	See Spec.
52	Gas Tight Shaft Seals	Yes		Gas Tight Seal Type	*

HIGH-PRESSURE CENTRIFUGAL BLOWER Data Sheet:

24590-HLW-MAD-HOP-P0036

MR No.
24590-QL-MRA-MACS-00002

Plant Item No.
24590-HLW-MA-HOP-FAN-00009B

Rev. No.
0

1	Project:	RPP-WTP	Bldg./Room #	**HLW / H-B001C**	Manufacturer:	*
2	Project No·	24590	Supporting	**DELETED**		
3	Site:	DOE Hanford	Calculation		Manufacturer	*
4	Safety Class	**SDS**	Supporting	**24590-HLW-M6-HOP-P20003**	Part No:	
5	Seismic Category	**SC-III**	Drawings		Quantity Required	**1**
6	System No.	**HOP**	System Desc	**24590-HLW-3YD-HOP-00001**	Quality Level	**QL2**
7	Description: **HLW Offgas Booster Fan**					
8						

9 FAN ACCESSORIES (continued)

10	Isolation Base		**No**	Isolation Base Type	**N/A**
11				Isolation Base Manufacturer	**N/A**
12	Isolation Springs		**No**	Isolation Springs Mfr and Model No	**N/A**
13				Isolation Springs Minumum Diameter	**N/A**
14				Isolation Springs Deflection	**N/A**
15				Isolation Springs Restraint Features	**N/A**
16	Flexible Connection Inlet		**Yes**		
17	Flexible Connection Inlet Type		*		
18	Flexible Inlet Connection Material		*		
19	Flexible Connection Manufacturer and Model No		*		
20	Flexible Connection Outlet		**Yes**		
21	Flexible Connection Outlet Type		*		
22	Flexible Outlet Connection Material		*		
23	Flexible Connection Manufacturer and Model No		*		
24	Inlet Screen		**No**		
25	Inlet Screen Features	**N/A**			
26	Variable Speed Drive	**Yes**			
27	Special Drive Features	**ASD to operate motor from 30% to 100% of required RPM within a 30 second time frame (max)**			
28	Fan Pedestal	**Yes**			
29	Fan Pedestal Description	**Common mounting base for fan, motor, and bearings**			
30	Silencer	*			

31 MOTOR AND DRIVE REQUIREMENTS

32	NEMA Motor Horsepower	**See Appendix 1**		
33	Motor Synchronous RPM	**See Appendix 1**		
34	Motor Enclosure Type	**See Appendix 1**		
35	Frame Size	**See Appendix 1**		
36	Temperature Rise	**See Appendix 1**		
37	Bearings	**See Appendix 1**		
38	Bearing L-10 Life	**300,000 hr. (min.)**		
39	Insulation Class	**See Appendix 1**		
40	Conduit Box Construction	**NEMA Type 4**		
41	Space Heaters	**See Appendix 1**		
42	Mounting Base	*		
43	Special Motor Features	**See Appendix 1**		
44				
45	Disconnect Switch Provided	**Yes**		
46	Motor Pedestal	**Yes**		**Common with fan.**
47	Motor (Voltage/Phase/Frequency)	**See Appendix 1**		
48	Construction (Horiz/Vertical Shaft)	**Horizontal Shaft**		
49	Service Factor	**See Appendix 1**		
50	Running and Starting Duty	**Continuous**		
51	Bearing Lubrication	*		
52	Starting Method	*		
53	Assembly Position	*		

HIGH-PRESSURE CENTRIFUGAL BLOWER Data Sheet:

24590-HLW-MAD-HOP-P0036

MR No.
24590-QL-MRA-MACS-00002

Plant Item No.
24590-HLW-MA-HOP-FAN-00009B

Rev. No.
0

1	Project:	RPP-WTP	Bldg./Room #	**HLW / H-B001C**	Manufacturer:	*
2	Project No:	24590	Supporting	**DELETED**		
3	Site:	DOE Hanford	Calculation		Manufacturer	*
4	Safety Class	**SDS**	Supporting	**24590-HLW-M6-HOP-P20003**	Part No:	
5	Seismic Category	**SC-III**	Drawings		Quantity Required	**1**
6	System No.	**HOP**	System Desc	**24590-HLW-3YD-HOP-00001**	Quality Level	**QL2**
7	Description. **HLW Offgas Booster Fan**					
8						

9 MOTOR AND DRIVE REQUIREMENTS

10	Coupling and Sheaves	**Falk Flex-Type (or equal)**
11	Test and Inspection Requirements	**See Appendix 1**
12		
13	Motor Shaft Size	**See Appendix 1**
14	Min Full Loaded Motor Efficiency	**See Appendix 1**
15		

16 Remarks

17

18 1) * dentoes data to be provided by vendor.
19 2) N/A denotes "Not Applicable".
20 3) TBD denotes "To Be Determined" at a later date.
21 4) The impeller shall be anti-surge design developing continuously rising SP from free delivery thru shutoff.
22 5) Bounding dimensions not to exceed 45" w x 60" h x 80" l (Total Vendor Scope).
23 6) See Process Data Sheet 24590-HLW-MAD-HOP-00030 for Process Data and Effluent Definition.
24 7) See Specification 24590-WTP-3PS-MACS-TP004 for additional requirements.
25 8) Motor horsepower to be provided by vendor. Assume "cold-gas" conditions at startup
26 9) Rotation is listed as viewed from drive side.
27 10) For technical requirements specific to the motors serving this equipment see the following Appendix 1.

MARK W. HOFFMANN
STATE OF WASHINGTON
0030952
REGISTERED
PROFESSIONAL ENGINEER
3/19/04

EXPIRES 12/10/04

This bound document contains 5 pages

Please note that source, special nuclear and byproduct materials, as defined in the Atomic Energy Act of 1954 (AEA), are regulated at the U.S. Department of Energy (DOE) facilities exclusively by DOE acting pursuant to its AEA authority. DOE asserts, that pursuant to the AEA, it has sole and exclusive responsibility and authority to regulate source, special nuclear, and byproduct materials at DOE-owned nuclear facilities. Information contained herein on radionuclides is provided for process description purposes only.

Rev	Date	Description	Originator	Checker	Approver
0	3/19/04	Issued for Permitting Use			

APPENDIX 1 **ELECTRICAL DATA SHEET** **LOW VOLTAGE INDUCTION MOTOR** **24590-HLW-MAD-HOP-P0036**	MR No. **24590-QL-MRA-MACS-00002** Plant Item No. **24590-HLW-MA-HOP-FAN-00009B -M**	Rev. No. **0**

Driven Equipment No.: 24590-HLW-MA-HOP-FAN-00009B

Service:

Refer to "Primary Specification": 24590-WTP-3PS-MACS-TP004

LINE NO.	DESCRIPTION	USER SPECIFIED	SUPPLIER FURNISHED	UNITS
	BASIC DATA:			
1	RATED HORSEPOWER	*		HP
2	SYNCHRONOUS SPEED	*		RPM
3	VOLTAGE	460		V
4	PHASE	3		-
5	FREQUENCY	60		Hz
6	INSULATION CLASS	F		-
7	TEMPERATURE RISE ABOVE 40°C AMBIENT	80		deg. C
8	NEMA DESIGN TYPE (B, C, OTHER)	B		-
9	EFFICIENCY (STANDARD, PREMIUM)	PREMIUM		-
10	ENCLOSURE TYPE (TEFC - SEVERE DUTY PER IEEE Std. 841, TENV, WP1I)	TEFC IEEE Std. 841		-
11	SERVICE FACTOR	1.15		-
12	COUPLED DRIVE (DIRECT, BELT, GEAR)	DIRECT		-
13	BEARING (ANTI-FRICTION/SLEEVE)	ANTI-FRICTION		-
14	BEARING SEAL (ONE END, BOTH ENDS)	BOTH ENDS		-
15	SPACE HEATER (FOR OUTDOOR MOTORS > 20 HP)	N/A		W
16	RTD FOR SLEEVE BEARING : 1 per bearing for Belt drive only	NO		Ω
17	TERMINAL BOX LOCATION	By Elect		-
18	WARRANTY (2 YEARS, 3 YEARS, 5 YEARS)	2		-
19	**SHOP TESTS**			
	- MFR STANDARD TEST (YES / NO)	YES		
	- ROUTINE TEST (YES / NO)	YES		
	- FULL TEST (YES / NO)	NO		
	UNUSUAL SERVICE CONDITIONS: (YES / NO)			
20	FLAMMABLE OR EXPLOSIVE GASES	NO		
21	COMBUSTIBLE, EXPLOSIVE, ABRASIVE OR CONDUCTIVE DUST	NO		
22	WET OR DRY OPERATING CONDITIONS	DRY		
23	NUCLEAR RADIATION	NO		
24	SPECIAL PAINTING REQUIREMENTS PER IEEE Std. 841	NO		
25	OTHER (SDC or SDS)	ITS - SDS		
26	OTHER (SEISMIC CATEGORY I , II, III or IV)	SC-III		

APPENDIX 1 ELECTRICAL DATA SHEET LOW VOLTAGE INDUCTION MOTOR 24590-HLW-MAD-HOP-P0036	MR No. 24590-QL-MRA-MACS-00002	
	Plant Item No. 24590-HLW-MA-HOP-FAN-00009B -M	Rev. No. 0

Driven Equipment No.: 24590-HLW-MA-HOP-FAN-00009B

Service:

Refer to "Primary Specification": 24590-WTP-3PS-MACS-TP004

LINE NO.	DESCRIPTION	USER SPECIFIED	SUPPLIER FURNISHED	UNITS
27	MANUFACTURER	-		-
28	NEMA FRAME	-		-
29	MODEL NUMBER	-		-
30	SERIAL NUMBER / MANUFACTURER DATE	-		-
31	FULL LOAD SPEED	-		RPM
32	FULL LOAD CURRENT	-		A
33	FULL LOAD TORQUE	-		ft-lb
34	POWER FACTOR : - @ 50 % LOAD	-		%
	- @ 75 % LOAD	-		%
	- @ 100 % LOAD	-		%
35	EFFICIENCY : - @ 50% LOAD	-		%
	- @ 75% LOAD	-		%
	- @ 100% LOAD	-		%
36	LOCKED ROTOR CURRENT @ 100 % of RATED VOLTAGE	-		A
37	LOCKED ROTOR CURRENT @ 80% of RATED VOLTAGE	-		A
38	ALLOWABLE STALL TIME @ FULL VOLTAGE	-		SEC
39	ALLOWABLE STALL TIME @ 80% of VOLTAGE	-		SEC
40	LOSSES @ FULL LOAD	-		W
41	ROTOR WK2 @ MOTOR SHAFT SPEED (For > 250 hp only)	-		lb-ft²
42	STARTING POWER FACTOR (For > 75 hp only)	-		-
43	SUBTRANSIENT REACTANCE AND X/R (For > 75 hp only)	-		-
44	WEIGHT	-		lbs
45	ROTATION (CW, CCW, BI-DIR.) FACING DRIVEN EQUIPMENT	-		-
46	MEAN TIME BETWEEN FAILURE (MOTOR 100 HP AND ABOVE)			
47	STARTING METHOD (FULL/REDUCED VOLTAGE, ASD APPLICATION)	-		-
48	MEAN TIME BETWEEN FAILURE (MOTOR 100 HP AND ABOVE)	-		
49	RECOMMENDED BEARING LUBRICANT	-		
50	INVERTER DUTY RATED	YES		-

NOTES:

1) This Datasheet is for all motors except for Cranes, Hoists, Elevators and Submersible Motors. Motors less than ½ HP shall be Supplier's standard 115 V, 1 Ph, totally enclosed, preferably 1800 rpm.
2) Motor should be applied within its rating based on service factor of 1.0.
3) Data Sheet Line no from 34 to 46 are applicable for motor 100 HP and above.
4) * denotes data to be provided by vendor.
5) DELETED

R10272784

HIGH-PRESSURE CENTRIFUGAL BLOWER Data Sheet:

24590-HLW-MAD-HOP-P0037

MR No.	24590-QL-MRA-MACS-00002
Plant Item No.	24590-HLW-MA-HOP-FAN-00009C
Rev. No.	0

1	Project:	RPP-WTP	Bldg./Room #	HLW / H-B001C	Manufacturer:	ISSUED BY RPP-WTP PDC INIT DATE
2	Project No:	24590	Supporting Calculation	DELETED		
3	Site:	DOE Hanford			Manufacturer Part No:	
4	Safety Class	SDS	Supporting Drawings	24590-HLW-M6-HOP-P20003		
5	Seismic Category	SC-III			Quantity Required	1
6	System No.	HOP	System Desc	24590-HLW-3YD-HOP-00001	Quality Level	QL2
7	Description: HLW Offgas Booster Fan					
8						

9 DESIGN TEMPERATURES

10	Zone Design Temperature	Summer °F	95					
11	Indoor Design Temperature	Minimum °F	59	Maximum °F	95	Relative Humidity	10%	(min.)
12								
13	Contamination Classification Area	DELETED	Elevation:	661	Ft. above MSL			

14 DESIGN CONDITIONS

15	Design Fan Capacity	*	ACFM	Inlet Air Temperature °F	300	
16	Design Fan Capacity (min / max)	400 / 1000	SCFM @ 60°F	Air Temperature Range °F	See Note 6	
17	External Static Pressure (min / max)	20 / 80	inches WC	Air Density	See Note 6	lbs/ft^3
18	Total Static Pressure	*	inches WC	Fan Inlet Pressure	See Note 6	inches WC
19	Minimum Fan Efficiency	*	%	Fan Discharge Pressure	See Note 6	inches WC
20	Fan Operating Speed	*	RPM	Fan Motor Operating Weight	*	pounds
21	Power at Operating Conditions	*	BHP	Power at Inlet Temperature	*	BHP
22	Assembly wt -Mtr Fan Base	*	pounds	Max. Temp. & Rate of Rise for Mech. Design	350 / 30	°F / °F/sec

23 CONSTRUCTION

24	Design Fan Manufacturer	*	Design Fan Model Number	*
25	AMCA Drive Arrangement	8	AMCA Inlet Box Position	*
26	AMCA Motor Position	Direct Drive	AMCA Discharge	Upblast
27	AMCA Rotation	CW (See Note 9)	Fan Scroll Type	SWSI

28 FAN WHEEL

29	Fan Wheel Type	See Note 4	Fan Shaft Diameter	*
30	Design Wheel Diameter	*	Actual Wheel Diameter	*
31	Design Wheel Width	*	Actual Wheel Width	*
32	Design Fan RPM	*	Actual Fan RPM	*
33	Design Brake Horsepower	*	Actual Brake Horsepower	*
34	Fan Bearing Type	*	Fan Bearing Designator	*

35 FAN MATERIALS

36	Housing	S/S 316L	Fan Wheel	S/S 316L
37	Evase	N/A	Mounting Frame	S/S 316L
38	Shaft	S/S 316L	Inlet Damper	N/A
39	Inlet Vane	N/A	Discharge Damper	N/A
40	Inlet Screen	N/A	Bearing Special Features	N/A
41	Mechanical Coupling	Falk Flex-Type (or equal)	Safety Guards Types	OSHA Compatible

42 FAN ACCESSORIES

43	Flanged Inlet	Yes		Flanged Inlet Dimensions	*
44	Flanged Discharge	Yes		Flanged Discharge Dimensions	*
45	Flanged Discharge Evase		No	Flanged Evase Dimensions	N/A
46	Split Housing	Yes		Split Housing Type	*
47	Inlet Box		No	Inlet Box Type	N/A
48	Inlet Damper		No	Inlet damper Type	N/A
49	Inlet Damper Motor		No	Inlet Damper Mfr and Model No	N/A
50	Inspection Door	Yes		Inspection Door Size	*
51	Drain Connection	Yes		Drain Connection Size	See Spec.
52	Gas Tight Shaft Seals	Yes		Gas Tight Seal Type	*

HIGH-PRESSURE CENTRIFUGAL BLOWER Data Sheet:

24590-HLW-MAD-HOP-P0037

MR No.	24590-QL-MRA-MACS-00002
Plant Item No.	24590-HLW-MA-HOP-FAN-00009C
Rev. No.	0

1	Project:	RPP-WTP	Bldg./Room #	HLW / H-B001C	Manufacturer:	*
2	Project No:	24590	Supporting Calculation	DELETED		
3	Site:	DOE Hanford			Manufacturer Part No:	*
4	Safety Class	SDS	Supporting Drawings	24590-HLW-M6-HOP-P20003		
5	Seismic Category	SC-III			Quantity Required	1
6	System No.	HOP	System Desc	24590-HLW-3YD-HOP-00001	Quality Level	QL2
7	Description: HLW Offgas Booster Fan					
8						

9 FAN ACCESSORIES (continued)

10	Isolation Base		No	Isolation Base Type	N/A
11				Isolation Base Manufacturer	N/A
12	Isolation Springs		No	Isolation Springs Mfr and Model No	N/A
13				Isolation Springs Minumum Diameter	N/A
14				Isolation Springs Deflection	N/A
15				Isolation Springs Restraint Features	N/A
16	Flexible Connection Inlet		Yes		
17	Flexible Connection Inlet Type		*		
18	Flexible Inlet Connection Material		*		
19	Flexible Connection Manufacturer and Model No		*		
20	Flexible Connection Outlet		Yes		
21	Flexible Connection Outlet Type		*		
22	Flexible Outlet Connection Material		*		
23	Flexible Connection Manufacturer and Model No		*		
24	Inlet Screen		No		
25	Inlet Screen Features	N/A			
26	Variable Speed Drive	Yes			
27	Special Drive Features	ASD to operate motor from 30% to 100% of required RPM within a 30 second time frame (max)			
28	Fan Pedestal	Yes			
29	Fan Pedestal Description	Common mounting base for fan, motor, and bearings			
30	Silencer	*			

31 MOTOR AND DRIVE REQUIREMENTS

32	NEMA Motor Horsepower	See Appendix 1		
33	Motor Synchronous RPM	See Appendix 1		
34	Motor Enclosure Type	See Appendix 1		
35	Frame Size	See Appendix 1		
36	Temperature Rise	See Appendix 1		
37	Bearings	See Appendix 1		
38	Bearing L-10 Life	300,000 hr. (min.)		
39	Insulation Class	See Appendix 1		
40	Conduit Box Construction	NEMA Type 4		
41	Space Heaters	See Appendix 1		
42	Mounting Base	*		
43	Special Motor Features	See Appendix 1		
44				
45	Disconnect Switch Provided	Yes		
46	Motor Pedestal	Yes		Common with fan.
47	Motor (Voltage/Phase/Frequency)	See Appendix 1		
48	Construction (Horiz/Vertical Shaft)	Horizontal Shaft		
49	Service Factor	See Appendix 1		
50	Running and Starting Duty	Continuous		
51	Bearing Lubrication	*		
52	Starting Method	*		
53	Assembly Position	*		

HIGH-PRESSURE CENTRIFUGAL BLOWER Data Sheet:

24590-HLW-MAD-HOP-P0037

MR No
24590-QL-MRA-MACS-00002

Plant Item No.: **24590-HLW-MA-HOP-FAN-00009C**

Rev No.: **0**

1	Project:	RPP-WTP	Bldg./Room #	**HLW / H-B001C**	Manufacturer:	*
2	Project No:	24590	Supporting Calculation	**DELETED**		
3	Site:	DOE Hanford			Manufacturer Part No:	*
4	Safety Class	**SDS**	Supporting Drawings	**24590-HLW-M6-HOP-P20003**		
5	Seismic Category	**SC-III**			Quantity Required	**1**
6	System No.	**HOP**	System Desc	**24590-HLW-3YD-HOP-00001**	Quality Level	**QL2**
7	Description: **HLW Offgas Booster Fan**					
8						

9 MOTOR AND DRIVE REQUIREMENTS

10	Coupling and Sheaves	**Falk Flex-Type (or equal)**
11	Test and Inspection Requirements	**See Appendix 1**
12		
13	Motor Shaft Size	**See Appendix 1**
14	Min Full Loaded Motor Efficiency	**See Appendix 1**
15		

16 Remarks:

17

18 1) * dentoes data to be provided by vendor.
19 2) N/A denotes "Not Applicable".
20 3) TBD denotes "To Be Determined" at a later date.
21 4) The impeller shall be anti-surge design developing continuously rising SP from free delivery thru shutoff.
22 5) Bounding dimensions not to exceed 45" w x 60" h x 80" l (Total Vendor Scope).
23 6) See Process Data Sheet 24590-HLW-MAD-HOP-00031 for Process Data and Effluent Definition.
24 7) See Specification 24590-WTP-3PS-MACS-TP004 for additional requirements.
25 8) Motor horsepower to be provided by vendor. Assume "cold-gas" conditions at startup.
26 9) Rotation is listed as viewed from drive side
27 10) For technical requirements specific to the motors serving this equipment see the following Appendix 1.

MARK W. HOFFMANN
STATE OF WASHINGTON
0030952
REGISTERED
PROFESSIONAL ENGINEER
3/19/04

EXPIRES 12/10/04

This bound document contains 5 pages

Please note that source, special nuclear and byproduct materials, as defined in the Atomic Energy Act of 1954 (AEA), are regulated at the U.S. Department of Energy (DOE) facilities exclusively by DOE acting pursuant to its AEA authority. DOE asserts, that pursuant to the AEA, it has sole and exclusive responsibility and authority to regulate source, special nuclear, and byproduct materials at DOE-owned nuclear facilities. Information contained herein on radionuclides is provided for process description purposes only.

Rev	Date	Description	Originator	Checker	Approver
0	3/19/04	Issued for Permitting Use			

APPENDIX 1 **ELECTRICAL DATA SHEET** **LOW VOLTAGE INDUCTION MOTOR** **24590-HLW-MAD-HOP-P0037**	MR No. **24590-QL-MRA-MACS-00002** Plant Item No. **24590-HLW-MA-HOP-FAN-00009C -M**	Rev. No. **0**

Driven Equipment No.: 24590-HLW-MA-HOP-FAN-00009C

Service:

Refer to "Primary Specification": 24590-WTP-3PS-MACS-TP004

LINE NO.	DESCRIPTION	USER SPECIFIED	SUPPLIER FURNISHED	UNITS
	BASIC DATA:			
1	RATED HORSEPOWER	*		HP
2	SYNCHRONOUS SPEED	*		RPM
3	VOLTAGE	460		V
4	PHASE	3		-
5	FREQUENCY	60		Hz
6	INSULATION CLASS	F		-
7	TEMPERATURE RISE ABOVE 40°C AMBIENT	80		deg. C
8	NEMA DESIGN TYPE (B, C, OTHER)	B		-
9	EFFICIENCY (STANDARD, PREMIUM)	PREMIUM		-
10	ENCLOSURE TYPE (TEFC - SEVERE DUTY PER IEEE Std 841, TENV, WP1I)	TEFC IEEE Std. 841		-
11	SERVICE FACTOR	1.15		-
12	COUPLED DRIVE (DIRECT, BELT, GEAR)	DIRECT		-
13	BEARING (ANTI-FRICTION/SLEEVE)	ANTI-FRICTION		-
14	BEARING SEAL (ONE END, BOTH ENDS)	BOTH ENDS		-
15	SPACE HEATER (FOR OUTDOOR MOTORS > 20 HP)	N/A		W
16	RTD FOR SLEEVE BEARING : 1 per bearing for Belt drive only	NO		Ω
17	TERMINAL BOX LOCATION	By Elect		-
18	WARRANTY (2 YEARS, 3 YEARS, 5 YEARS)	2		-
19	**SHOP TESTS**			
	- MFR STANDARD TEST (YES / NO)	YES		
	- ROUTINE TEST (YES / NO)	YES		
	- FULL TEST (YES / NO)	NO		
	UNUSUAL SERVICE CONDITIONS: (YES / NO)			
20	FLAMMABLE OR EXPLOSIVE GASES	NO		
21	COMBUSTIBLE, EXPLOSIVE, ABRASIVE OR CONDUCTIVE DUST	NO		
22	WET OR DRY OPERATING CONDITIONS	DRY		
23	NUCLEAR RADIATION	NO		
24	SPECIAL PAINTING REQUIREMENTS PER IEEE Std. 841	NO		
25	OTHER (SDC or SDS)	ITS - SDS		
26	OTHER (SEISMIC CATEGORY I , II, III or IV)	SC-III		

APPENDIX 1 **ELECTRICAL DATA SHEET** **LOW VOLTAGE INDUCTION MOTOR** **24590-HLW-MAD-HOP-P0037**	MR No. **24590-QL-MRA-MACS-00002** Plant Item No. **24590-HLW-MA-HOP-FAN-00009C -M**	Rev. No. **0**

Driven Equipment No.: 24590-HLW-MA-HOP-FAN-00009C

Service:

Refer to "Primary Specification": 24590-WTP-3PS-MACS-TP004

LINE NO.	DESCRIPTION	USER SPECIFIED	SUPPLIER FURNISHED	UNITS
27	MANUFACTURER	-		-
28	NEMA FRAME	-		-
29	MODEL NUMBER	-		-
30	SERIAL NUMBER / MANUFACTURER DATE	-		-
31	FULL LOAD SPEED	-		RPM
32	FULL LOAD CURRENT	-		A
33	FULL LOAD TORQUE	-		ft-lb
34	POWER FACTOR : - @ 50 % LOAD	-		%
	- @ 75 % LOAD	-		%
	- @ 100 % LOAD	-		%
35	EFFICIENCY - @ 50% LOAD	-		%
	- @ 75% LOAD	-		%
	- @ 100% LOAD	-		%
36	LOCKED ROTOR CURRENT @ 100 % of RATED VOLTAGE	-		A
37	LOCKED ROTOR CURRENT @ 80% of RATED VOLTAGE	-		A
38	ALLOWABLE STALL TIME @ FULL VOLTAGE	-		SEC
39	ALLOWABLE STALL TIME @ 80% of VOLTAGE	-		SEC
40	LOSSES @ FULL LOAD	-		W
41	ROTOR WK2 @ MOTOR SHAFT SPEED (For > 250 hp only)	-		lb-ft²
42	STARTING POWER FACTOR (For > 75 hp only)	-		-
43	SUBTRANSIENT REACTANCE AND X/R (For > 75 hp only)	-		-
44	WEIGHT	-		lbs
45	ROTATION (CW, CCW, BI-DIR.) FACING DRIVEN EQUIPMENT	-		-
46	MEAN TIME BETWEEN FAILURE (MOTOR 100 HP AND ABOVE)			
47	STARTING METHOD (FULL/REDUCED VOLTAGE, ASD APPLICATION)	-		-
48	MEAN TIME BETWEEN FAILURE (MOTOR 100 HP AND ABOVE)	-		
49	RECOMMENDED BEARING LUBRICANT	-		
50	INVERTER DUTY RATED	YES		-

NOTES:

1) This Datasheet is for all motors except for Cranes, Hoists, Elevators and Submersible Motors. Motors less than ½ HP shall be Supplier's standard 115 V, 1 Ph, totally enclosed, preferably 1800 rpm.
2) Motor should be applied within its rating based on service factor of 1.0.
3) Data Sheet Line no. from 34 to 46 are applicable for motor 100 HP and above.
4) * denotes data to be provided by vendor.
5) DELETED

R10378308

HIGH-PRESSURE CENTRIFUGAL BLOWER Data Sheet:

24590-HLW-MAD-HOP-P0038

MR No	24590-QL-MRA-MACS-00002
Plant Item No.	See Note 11
Rev No.	0

ISSUED BY RPP-WTP PDC

1	Project:	RPP-WTP	Bldg./Room #	HLW / H-0429	Manufacturer	*
2	Project No	24590	Supporting	DELETED		
3	Site:	DOE Hanford	Calculation		Manufacturer	*
4	Safety Class	SDS	Supporting	24590-HLW-M6-HOP-P0008	Part No:	
5	Seismic Category	SC-III	Drawings	24590-HLW-M6-HOP-P20008	Quantity Required	6
6	System No.	HOP	System Desc	24590-HLW-3YD-HOP-00001	Quality Level	QL2
7	Description: HLW Offgas Stack Extraction Fan					
8						

9 DESIGN TEMPERATURES

10	Zone Design Temperature	Summer °F	95					
11	Indoor Design Temperature	Minimum °F	59	Maximum °F	95	Relative Humidity	10%	(min)
12								
13	Contamination Classification Area	DELETED	Elevation:	661	Ft above MSL			

14 DESIGN CONDITIONS

15	Design Fan Capacity (max)	1785	ACFM	Inlet Air Temperature °F at max flow	276	
16	External Static Pressure at max flow	82	inches WC	Suction Air Density at max flow	0.041	lbs/ft^3
17	Design Fan Capacity (normal)	1110	ACFM	Inlet Air Temperature °F at normal flow	248	
18	External Static Pressure at normal flow	60	inches WC	Suction Air Density at normal flow	0.047	lbs/ft^3
19	Design Fan Capacity (min op)	590	ACFM	Inlet Air Temperature °F at min operating flow	227	
20	External Static Pressure at min op flow	35	inches WC	Suction Air Density at min operating flow	0.051	lbs/ft^3
21	Design Fan Capacity (melter idle)	545	ACFM	Inlet Air Temperature °F at (melter idle) flow	142	
22	External Static Pressure at(melter idle)	20	inches WC	Suction Air Density at(melter idle) flow	0.058	lbs/ft^3
23	Total Static Pressure (Max)	*	inches WC	Fan Inlet Pressure range	11.7 to 14.1	psia
24	Minimum Fan Efficiency	*	%	Fan Discharge Pressure range	14.4 to 14.5	psia
25	Fan Operating Speed	*	RPM	Fan Motor Operating Weight	*	pounds
26	Power at Operating Conditions	*	BHP	Power at Inlet Temperature	*	BHP
27	Assembly wt -Mtr Fan Base	*	pounds	Max Temp & Rate of Rise for Mech. Design	350 / 30	°F / °F/sec

28 CONSTRUCTION

29	Design Fan Manufacturer	*	Design Fan Model Number	*
30	AMCA Drive Arrangement	8	AMCA Inlet Box Position	*
31	AMCA Motor Position	Direct Drive	AMCA Discharge	Upblast
32	AMCA Rotation	CW (See Note 9)	Fan Scroll Type	•

33 FAN WHEEL

34	Fan Wheel Type	See Note 4	Fan Shaft Diameter	*
35	Design Wheel Diameter	*	Actual Wheel Diameter	*
36	Design Wheel Width	*	Actual Wheel Width	*
37	Design Fan RPM	*	Actual Fan RPM	*
38	Design Brake Horsepower	*	Actual Brake Horsepower	*
39	Fan Bearing Type	*	Fan Bearing Designator	*

40 FAN MATERIALS

41	Housing	S/S 316L	Fan Wheel	S/S 316L
42	Evase	N/A	Mounting Frame	S/S 316L
43	Shaft	S/S 316L	Inlet Damper	N/A
44	Inlet Vane	N/A	Discharge Damper	N/A
45	Inlet Screen	N/A	Bearing Special Features	N/A
46	Mechanical Coupling	Falk Flex-Type (or equal)	Safety Guards Types	OSHA Compatible

47 FAN ACCESSORIES

48	Flanged Inlet	Yes		Flanged Inlet Dimensions	*
49	Flanged Discharge	Yes		Flanged Discharge Dimensions	*
50	Flanged Discharge Evase		No	Flanged Evase Dimensions	N/A
51	Split Housing	Yes		Split Housing Type	*
52	Inlet Box		No	Inlet Box Type	N/A
53	Inlet Damper		No	Inlet damper Type	N/A
54	Inlet Damper Motor		No	Inlet Damper Mfr and Model No	N/A
55	Inspection Door	Yes		Inspection Door Size	*
56	Drain Connection	Yes		Drain Connection Size	See Spec.
57	Gas Tight Shaft Seals	Yes		Gas Tight Seal Type	*

HIGH-PRESSURE CENTRIFUGAL BLOWER Data Sheet:

24590-HLW-MAD-HOP-P0038

MR No.	24590-QL-MRA-MACS-00002
Plant Item No	See Note 11
Rev. No.	0

1	Project:	RPP-WTP	Bldg./Room #	HLW / H-0429	Manufacturer:	*
2	Project No:	24590	Supporting	DELETED		
3	Site:	DOE Hanford	Calculation		Manufacturer	*
4	Safety Class	SDS	Supporting	24590-HLW-M6-HOP-P0008	Part No.	
5	Seismic Category	SC-III	Drawings	24590-HLW-M6-HOP-P20008	Quantity Required	6
6	System No.	HOP	System Desc	24590-HLW-3YD-HOP-00001	Quality Level	QL2
7	Description: HLW Offgas Stack Extraction Fan					
8						

9 FAN ACCESSORIES (continued)

10	Isolation Base		No	Isolation Base Type	N/A
11				Isolation Base Manufacturer	N/A
12	Isolation Springs		No	Isolation Springs Mfr and Model No	N/A
13				Isolation Springs Minimum Diameter	N/A
14				Isolation Springs Deflection	N/A
15				Isolation Springs Restraint Features	N/A
16	Flexible Connection Inlet		Yes		
17	Flexible Connection Inlet Type		*		
18	Flexible Inlet Connection Material		*		
19	Flexible Connection Manufacturer and Model No		*		
20	Flexible Connection Outlet		Yes		
21	Flexible Connection Outlet Type		*		
22	Flexible Outlet Connection Material		*		
23	Flexible Connection Manufacturer and Model No		*		
24	Inlet Screen		No		
25	Inlet Screen Features	N/A			
26	Variable Speed Drive	Yes			
27	Special Drive Features	ASD to operate motor from 30% to 100% of required RPM within a 30 second time frame (max)			
28	Fan Pedestal	Yes			
29	Fan Pedestal Description	Common mounting base for fan, motor, and bearings			
30	Insulation Studs	No	Insulation thickness	N/A	
31	Silencer	*			

32 MOTOR AND DRIVE REQUIREMENTS

33 **(See Motors Data sheet and ASD Data sheet)**

34

35 Notes

36 1) * denotes data to be provided / verified by vendor.

37 2) N/A denotes "Not Applicable".

38 3) TBD denotes "To Be Determined" at a later date.

39 4) The impeller shall be anti-surge design developing continuously rising SP from free delivery thru shutoff.

40 5) Bounding dimensions not to exceed 45" w x 60" h x 105" l (Blower, Motor and Baseplate).

41 6) Deleted

42 7) See Specification 24590-WTP-3PS-MACS-T0004 for additional requirements.

43 8) Motor horsepower to be provided by vendor. Assume "cold-gas" conditions (59 °F) at startup.

44 9) Rotation is listed as viewed from drive side.

45 10) Deleted.

46 11) Driven Equipment / Motor / ASD relationship is as follows:

	Fan Tag Number	Motor Tag Number	ASD Tag Number
47			
48	HOP-FAN-00008A	HOP-MTR-00008	HOP-ASD-00002A
49	HOP-FAN-00008B	HOP-MTR-00009	HOP-ASD-00002B
50	HOP-FAN-00008C	HOP-MTR-00010	HOP-ASD-00002C
51	HOP-FAN-00010A	HOP-MTR-00014	HOP-ASD-00004A
52	HOP-FAN-00010B	HOP-MTR-00015	HOP-ASD-00004B
53	HOP-FAN-00010C	HOP-MTR-00016	HOP-ASD-00004C

54 12) Contents of this document are Dangerous Waster Permit affecting.

HIGH-PRESSURE CENTRIFUGAL BLOWER Data Sheet:

24590-HLW-MAD-HOP-P0038

MR No	24590-QL-MRA-MACS-00002
Plant Item No.	See Note 11
Rev. No.	0

1	Project.	RPP-WTP	Bldg./Room #	HLW / H-0429	Manufacturer. *	
2	Project No:	24590	Supporting	DELETED		
3	Site	DOE Hanford	Calculation		Manufacturer *	
4	Safety Class	SDS	Supporting	24590-HLW-M6-HOP-P0008	Part No:	
5	Seismic Category	SC-III	Drawings	24590-HLW-M6-HOP-P20008	Quantity Required	6
6	System No.	HOP	System Desc	24590-HLW-3YD-HOP-00001	Quality Level	QL2
7	Description: HLW Offgas Stack Extraction Fan					
8						

10
11
12
13
14
15
16
17
18
19

Please note that source, special nuclear and byproduct materials, as defined in the Atomic Energy Act of 1954 (AEA), are regulated at the U.S. Department of Energy (DOE) facilities exclusively by DOE acting pursuant to its AEA authority. DOE asserts, that pursuant to the AEA, it has sole and exclusive responsibility and authority to regulate source, special nuclear, and byproduct materials at DOE-owned nuclear facilities. Information contained herein on radionuclides is provided for process description purposes only.

Rev	Date	Description	Originator	Checker	Approver
0	9/15/04	Issued for Permitting Use			

ERIC B. ISERN
STATE OF WASHINGTON
33449
REGISTERED
PROFESSIONAL ENGINEER
9/15/04
EXPIRES: 07/28/05

REMOTE-CHANGE HEPA FILTER HOUSING Data Sheet: 24590-HLW-MAD-PJV-P0004

ISSUED BY RPP-WTP PDC

R10397024

MR No.	Plant Item No.	Rev No.
DELETED	24590-HLW-MK-PJV-HEPA-00004A	0

1	Project:	RPP-WTP	Bldg./Rm #	HLW / H-0104	Manufacturer:	*
2	Project No:	24590	Supporting Calculations	DELETED		
3	Site:	DOE Hanford			Manufacturer Part No:	*
4	Safety Class	SDC	Associated Drawings	24590-HLW-M6-PJV-P0002		
5	Seismic Category	SC-I			Quantity Required	1
6	System No.	PJV	System Desc.	Pulse Jet Vent System	Quality Level	QL-1
7	Description: HLW Pulse Vent System - Primary "Active" Housing					
8						

9 DESIGN CONDITIONS

10	Zone Design Temperature- Summer F	113		Maximum/ Normal Inlet Air Temperature F	136 F	70 F
11	Site Storage Conditions - Summer F	113	db	0 -100% RH		
12	Housing Interior Chemical Exposure	DELETED				
13	Site Storage Conditions - Winter F	(-) 23		Radiological Dose Level per Hr		
14	Indoor Design Temperature - Winter F	59		Radiological Dose Level for Facility Life - 40years		7.2×10^8 Rem

15 PERFORMANCE RATING

16	Design Flow Rate (CFM)	10000		Leakage Rate @ Design Flow &		15 SCFM
17	Maximum Operating Pressure (in wc)	(-) 80"		Max Pressure (CFM)		
18	Maximum Design Pressure (in wc)	(-) 120"		Assembly Clean Pressure Drop with Filters (in wc)		5.5"
19	Total Filter Openings Required	6		Weight with HEPA Filters (pounds)		*
20	No. Filters per Bank	5		Weight without HEPA Filters (pounds)		•

21 CONSTRUCTION

22	Design Housing Manufacturer:	*	Design Housing Model Number:	*
23	Housing Construction Method:	All Welded		
24	Housing Material:	Type 304L Stainless Steel	Housing Material Gauge:	*
25	Top Panel Material:	Type 304L Stainless Steel	Top Panel Material Gauge:	*
26	Structural Frame Material:	Type 304L Stainless Steel	Structural Frame Features:	*
27	Inlet Plenum Total Volume:	*	Outlet Plenum Total Volume	•
28	Inlet Position: (Top/Side)	Side	Outlet Position: (Top/Side)	Side
29	Inlet Inside Dimensions: (inches)	20" Nom.Diam.	Outlet Inside Dimensions: (inches)	20" Nom. Diam.
30		See Note 5.		See Note 5.
31	Inlet Connection Type:	Welded	Outlet Connection Type:	Welded
32	Inlet Flange Bolt Required:	N/A	Outlet Flange Bolts Required:	N/A
33	Inlet Flange Bolt Size:	N/A	Outlet Flange Bolt Size:	N/A
34	Inlet Flange Bolt Material:	N/A	Outlet Flange Bolt Material:	N/A
35	Inlet Flange Gasket Material:	N/A	Outlet Flange Gasket Material:	N/A
36	Paint and Finish Material:	N/A	Paint and Finish Material Minimum Thickness:	N/A

37 HOUSING ACCESSORIES

38	Accessory Provided	Yes	No	Accessory Information	
39	Test w/Inlet Isolation Damper:	X		Damper Provided By:	Vendor
40	See Note 7			Inlet Isolation Damper Type:	Gate
41				Inlet Isolation Damper Size:	20" Nominal Diameter
42	Inlet Transition Ductwork:	X		Inlet Transition Ductwork	DELETED
43				Overall Length: (inches)	
44				Inlet Transition Smallest	20" Nominal Diameter
45				Inside Dimension: (inches)	See Note 5.
46				Inlet Transition Largest	20" Nominal Diameter
47				Inside Dimension: (inches)	See Note 5.
48	Inlet Aerosol Test Port Criteria:	X		Challenge Aerosol Connection Type:	*
49	See Note 8			Challenge Aerosol Connection Size:	*
50				Challenge Aerosol Connection Quantity:	*
51					
52					

REMOTE-CHANGE HEPA FILTER HOUSING Data Sheet: 24590-HLW-MAD-PJV-P0004

MR No	
DELETED	
Plant Item No.	Rev No.
24590-HLW-MK-PJV-HEPA-00004A	0

1	Project:	RPP-WTP	Bldg./Rm #	HLW / H-0104	Manufacturer: *	
2	Project No.:	24590	Supporting Calculations	DELETED		
3	Site:	DOE Hanford			Manufacturer Part No: *	
4	Safety Class	SDC	Associated Drawings	24590-HLW-M6-PJV-P0002		
5	Seismic Category	SC-I			Quantity Required	1
6	System No.	PJV	System Desc.	Pulse Jet Vent System	Quality Level	QL-1
7	Description: HLW Pulse Vent System - Primary "Active" Housing					
8						

9 HOUSING ACCESSORIES (continued)

10	**Accessory Provided**	**Yes**	**No**	Total Number of Viewing Ports Required:	N/A	
11	Inlet Viewing Ports		X	Inlet Viewing Port Type:	N/A	
12				Inlet Viewing Port Locations:	N/A	
13				Inlet Viewing Port	N/A	Width
14				Dimensions: (inches)	N/A	Length
15	Internal Fire Suppression:		X	Fire Suppression System Description:	N/A	
16				Accessory Information	1 per bank	
17	Vacuum-Relief Vent Assembly:	X		Number Required:	*	
18				Vacuum-Relief Vent Assembly Setpoint:	*	
19				Vacuum-Relief Vent Assembly Manufacturer:	*	
20				Vacuum-Relief Vent Model Number:	N/A	
21	Test w/Outlet Isolation Damper:		X	Damper Provided By:	N/A	
22				Outlet Isolation Damper Type:	N/A	
23				Outlet Isolation Damper Size:	20" Nominal Diameter	
24	Outlet Transition Ductwork:	X		Outlet Transition Ductwork Overall Length: (inches)	DELETED	
25						
26				Outlet Transition Smallest Inside Dimension:(inches)	20" Nominal Diameter	
27						
28				Outlet Transition Largest Inside Dimension: (inches)	20" Nominal Diameter	
29						
30	Outlet Aerosol Test Port Criteria:	X		Challenge Aerosol Connection Type:	*	
31				Challenge Aerosol Connection Size:	*	
32				Challenge Aerosol Connection Quantity:	*	
33	Outlet Viewing Ports:		X	Total Number of Viewing Ports Required:	N/A	
34				Outlet Viewing Port Type:	N/A	
35				Outlet Viewing Port Locations:	N/A	
36				Outlet Viewing Port	N/A	Width
37				Dimensions: (inches)	N/A	Length
38	Differential Pressure Taps:	X		Differential Pressure Tap Size: (inches)	1/2-inch SW	
39	Drain Connection:	See Note 9		Drain Connection Size: (inches)	N/A	
40	Drain Connection Valve:		X	Drain Connection Valve Size: (inches)	1 1/2"	
41				PVC Safe Change Bag Type:	N/A	

42 UTILITY REQUIREMENTS

43	Electrical: (volts/phase/hertz)	N/A
44	Compressed Air:	N/A
45	Intrumentation Taps:	3/4-inch SW
46	Pressure/Leak Test Ports	*
47	Air/Aerosol Mixing Test Ports	*
48		
49		
50		
51		
52		
53		

REMOTE-CHANGE HEPA FILTER HOUSING Data Sheet: 24590-HLW-MAD-PJV-P0004

MR No.	
DELETED	
Plant Item No.	Rev No.
24590-HLW-MK-PJV-HEPA-00004A	0

1	Project:	RPP-WTP	Bldg./Rm #	HLW / H-0104	Manufacturer: *	
2	Project No.:	24590	Supporting Calculations	DELETED		
3	Site:	DOE Hanford			Manufacturer Part No: *	
4	Safety Class	SDC	Associated Drawings	24590-HLW-M6-PJV-P0002		
5	Seismic Category	SC-I			Quantity Required	1
6	System No.	PJV	System Desc.	Pulse Jet Vent System	Quality Level	QL-1
7	Description: HLW Pulse Vent System - Primary "Active" Housing					
8						
9	Remarks: * Data to be provided by Vendor.					

10 **Notes:**

11 **1.) Vendor to fill in data with (*) asterisk.**

12 **2.) DELETED**

13 **3.) DELETED.**

14 **4.) DELETED.**

15 **5.) Inlet and Outlet I.D.'s to match I.D. of 20", 0.375" nominal wall thickness Stainless Steel Pipe.**

16 **6.) N/A denotes "Not Applicable".**

17 **7.) During Shop Test, Contractor may use a temporary valve or a blank-off plate.**

18 **8.) Aerosol test ports include injection and sampling at each stage.**

19 **9.) 1 1/2" plugged drain at low point in the plenum.**

20 **10.) Sealing materials and mechanism shall comply with ASME AG-1.**

ERIC B. ISERN
STATE OF WASHINGTON
33449
REGISTERED
PROFESSIONAL ENGINEER
10/4/04
EXPIRES: 07/28/05

Please note that source, special nuclear and byproduct materials, as defined in the Atomic Energy Act of 1954 (AEA), are regulated at the U.S. Department of Energy (DOE) facilities exclusively by DOE acting pursuant to its AEA authority. DOE asserts, that pursuant to the AEA, it has sole and exclusive responsibility and authority to regulate source, special nuclear, and byproduct materials at DOE-owned nuclear facilities. Information contained herein on radionuclides is provided for process description purposes only.

Rev	Date	Description	Originator	Checker	Approver
0	10/4/04	Issued for Permitting Use	M. Ondma		

REMOTE-CHANGE HEPA FILTER HOUSING Data Sheet: 24590-HLW-MAD-PJV-P0005

ISSUED BY RPP-WTP PDC

R10397025

MR No.	DELETED
Plant Item No.	24590-HLW-MK-PJV-HEPA-00005A
Rev No.	0

1	Project:	RPP-WTP	Bldg./Rm #	HLW / H-0104	Manufacturer:	*
2	Project No:	24590	Supporting Calculations	DELETED		
3	Site:	DOE Hanford			Manufacturer Part No:	*
4	Safety Class	SDC	Associated Drawings	24590-HLW-M6-PJV-P0002		
5	Seismic Category	SC-I			Quantity Required	1
6	System No.	PJV	System Desc.	Pulse Jet Vent System	Quality Level	QL-1
7	Description: HLW Pulse Vent System - Primary "Active" Housing					
8						

9 DESIGN CONDITIONS

10	Zone Design Temperature- Summer F	113		Maximum/ Normal Inlet Air Temperature F	136 F	70 F
11	Site Storage Conditions - Summer F	113	db	0 -100% RH		
12	Housing Interior Chemical Exposure	DELETED				
13	Site Storage Conditions - Winter F	(-) 23		Radiological Dose Level per Hr		
14	Indoor Design Temperature - Winter F	59		Radiological Dose Level for Facility Life - 40years		7.2×10^8 Rem

15 PERFORMANCE RATING

16	Design Flow Rate (CFM)	10000		Leakage Rate @ Design Flow & Max Pressure (CFM)		15 SCFM
17	Maximum Operating Pressure (in wc)	(-) 80"				
18	Maximum Design Pressure (in wc)	(-) 120"		Assembly Clean Pressure Drop with Filters (in wc)		5.5"
19	Total Filter Openings Required	6		Weight with HEPA Filters (pounds)		*
20	No. Filters per Bank	5		Weight without HEPA Filters (pounds)		*

21 CONSTRUCTION

22	Design Housing Manufacturer:	*	Design Housing Model Number:	*
23	Housing Construction Method:	All Welded		
24	Housing Material:	Type 304L Stainless Steel	Housing Material Gauge:	*
25	Top Panel Material:	Type 304L Stainless Steel	Top Panel Material Gauge:	*
26	Structural Frame Material:	Type 304L Stainless Steel	Structural Frame Features:	*
27	Inlet Plenum Total Volume:	*	Outlet Plenum Total Volume	*
28	Inlet Position: (Top/Side)	Side	Outlet Position: (Top/Side)	Side
29	Inlet Inside Dimensions: (inches)	20" Nom.Diam.	Outlet Inside Dimensions: (inches)	20" Nom. Diam.
30		See Note 5.		See Note 5.
31	Inlet Connection Type:	Welded	Outlet Connection Type:	Welded
32	Inlet Flange Bolt Required:	N/A	Outlet Flange Bolts Required:	N/A
33	Inlet Flange Bolt Size:	N/A	Outlet Flange Bolt Size:	N/A
34	Inlet Flange Bolt Material:	N/A	Outlet Flange Bolt Material:	N/A
35	Inlet Flange Gasket Material:	N/A	Outlet Flange Gasket Material:	N/A
36	Paint and Finish Material:	N/A	Paint and Finish Material Minimum Thickness:	N/A

37 HOUSING ACCESSORIES

38	Accessory Provided	Yes	No	Accessory Information	
39	Test w/Inlet Isolation Damper:	X		Damper Provided By:	Vendor
40	See Note 7			Inlet Isolation Damper Type:	Gate
41				Inlet Isolation Damper Size:	20" Nominal Diameter
42	Inlet Transition Ductwork:	X		Inlet Transition Ductwork Overall Length: (inches)	DELETED
43					
44				Inlet Transition Smallest Inside Dimension: (inches)	20" Nominal Diameter
45					See Note 5.
46				Inlet Transition Largest Inside Dimension: (inches)	20" Nominal Diameter
47					See Note 5.
48	Inlet Aerosol Test Port Criteria:	X		Challenge Aerosol Connection Type:	*
49	See Note 8			Challenge Aerosol Connection Size:	*
50				Challenge Aerosol Connection Quantity:	*
51					
52					

REMOTE-CHANGE HEPA FILTER HOUSING Data Sheet: 24590-HLW-MAD-PJV-P0005

MR No.	DELETED
Plant Item No.	24590-HLW-MK-PJV-HEPA-00005A
Rev No.	0

1	Project:	RPP-WTP	Bldg./Rm #	HLW / H-0104	Manufacturer:	*
2	Project No.:	24590	Supporting Calculations	DELETED		
3	Site:	DOE Hanford			Manufacturer Part No:	*
4	Safety Class	SDC	Associated Drawings	24590-HLW-M6-PJV-P0002		
5	Seismic Category	SC-I			Quantity Required	1
6	System No.	PJV	System Desc.	Pulse Jet Vent System	Quality Level	QL-1
7	Description:	HLW Pulse Vent System - Primary "Active" Housing				
8						

9 HOUSING ACCESSORIES (continued)

10	**Accessory Provided**	**Yes**	**No**	Total Number of Viewing Ports Required:	N/A	
11	Inlet Viewing Ports		X	Inlet Viewing Port Type:	N/A	
12				Inlet Viewing Port Locations:	N/A	
13				Inlet Viewing Port	N/A	Width
14				Dimensions: (inches)	N/A	Length
15	Internal Fire Suppression:		X	Fire Suppression System Description:	N/A	
16				Accessory Information	1 per bank	
17	Vacuum-Relief Vent Assembly:	X		Number Required:	*	
18				Vacuum-Relief Vent Assembly Setpoint:	*	
19				Vacuum-Relief Vent Assembly Manufacturer:	*	
20				Vacuum-Relief Vent Model Number:	N/A	
21	Test w/Outlet Isolation Damper:		X	Damper Provided By:	N/A	
22				Outlet Isolation Damper Type:	N/A	
23				Outlet Isolation Damper Size:	20" Nominal Diameter	
24	Outlet Transition Ductwork:	X		Outlet Transition Ductwork Overall Length: (inches)	DELETED	
25						
26				Outlet Transition Smallest Inside Dimension:(inches)	20" Nominal Diameter	
27						
28				Outlet Transition Largest Inside Dimension: (inches)	20" Nominal Diameter	
29						
30	Outlet Aerosol Test Port Criteria:	X		Challenge Aerosol Connection Type:	*	
31				Challenge Aerosol Connection Size:	*	
32				Challenge Aerosol Connection Quantity:	*	
33	Outlet Viewing Ports:		X	Total Number of Viewing Ports Required:	N/A	
34				Outlet Viewing Port Type:	N/A	
35				Outlet Viewing Port Locations:	N/A	
36				Outlet Viewing Port	N/A	Width
37				Dimensions: (inches)	N/A	Length
38	Differential Pressure Taps:	X		Differential Pressure Tap Size: (inches)	1/2-inch SW	
39	Drain Connection:	See Note 9		Drain Connection Size: (inches)	N/A	
40	Drain Connection Valve:		X	Drain Connection Valve Size: (inches)	1 1/2"	
41				PVC Safe Change Bag Type:	N/A	

42 UTILITY REQUIREMENTS

43	Electrical: (volts/phase/hertz)	N/A
44	Compressed Air:	N/A
45	Intrumentation Taps:	3/4-inch SW
46	Pressure/Leak Test Ports	*
47	Air/Aerosol Mixing Test Ports	*
48		
49		
50		
51		
52		
53		

REMOTE-CHANGE HEPA FILTER HOUSING Data Sheet: 24590-HLW-MAD-PJV-P0005

MR No.

DELETED

Plant Item No.	Rev No.
24590-HLW-MK-PJV-HEPA-00005A	**0**

1	Project:	RPP-WTP	Bldg./Rm #	**HLW / H-0104**	Manufacturer: *	
2	Project No.:	24590	Supporting Calculations	**DELETED**		
3	Site:	DOE Hanford			Manufacturer Part No: *	
4	Safety Class	**SDC**	Associated Drawings	**24590-HLW-M6-PJV-P0002**		
5	Seismic Category	**SC-I**			Quantity Required	**1**
6	System No.	**PJV**	System Desc.	**Pulse Jet Vent System**	Quality Level	**QL-1**
7	Description: **HLW Pulse Vent System - Primary "Active" Housing**					
8						
9	Remarks: * Data to be provided by Vendor.					

10 **Notes:**

11 **1.) Vendor to fill in data with (*) asterisk.**

12 **2.) DELETED**

13 **3.) DELETED.**

14 **4.) DELETED.**

15 **5.) Inlet and Outlet I.D.'s to match I.D. of 20", 0.375" nominal wall thickness Stainless Steel Pipe.**

16 **6.) N/A denotes "Not Applicable".**

17 **7.) During Shop Test, Contractor may use a temporary valve or a blank-off plate.**

18 **8.) Aerosol test ports include injection and sampling at each stage.**

19 **9.) 1 1/2" plugged drain at low point in the plenum.**

20 **10.) Sealing materials and mechanism shall comply with ASME AG-1.**

ERIC B. ISERN
STATE OF WASHINGTON
33449
REGISTERED
PROFESSIONAL ENGINEER
10/4/04

EXPIRES: 07/28/05

Please note that source, special nuclear and byproduct materials, as defined in the Atomic Energy Act of 1954 (AEA), are regulated at the U.S. Department of Energy (DOE) facilities exclusively by DOE acting pursuant to its AEA authority. DOE asserts, that pursuant to the AEA, it has sole and exclusive responsibility and authority to regulate source, special nuclear, and byproduct materials at DOE-owned nuclear facilities. Information contained herein on radionuclides is provided for process description purposes only.

Rev	Date	Description	Originator	Checker	Approver
0	10/4/04	**Issued for Permitting Use**	M. Ordona		

REMOTE-CHANGE HEPA FILTER HOUSING Data Sheet: 24590-HLW-MAD-PJV-P0006

MR No.	Plant Item No.	Rev No.
DELETED (ISSUED BY RPP-WTP PDC) R10397026	24590-HLW-MK-PJV-HEPA-00004B	0

1	Project:	RPP-WTP	Bldg./Rm #	HLW / H-0104	Manufacturer:	•
2	Project No:	24590	Supporting Calculations	DELETED		
3	Site:	DOE Hanford			Manufacturer Part No:	*
4	Safety Class	SDC	Associated Drawings	24590-HLW-M6-PJV-P0002		
5	Seismic Category	SC-I			Quantity Required	1
6	System No.	PJV	System Desc.	Pulse Jet Vent System	Quality Level	QL-1
7	Description: HLW Pulse Vent System - Primary "Active" Housing					
8						

9 DESIGN CONDITIONS

10	Zone Design Temperature- Summer F	113		Maximum/ Normal Inlet Air Temperature F	136 F	70 F
11	Site Storage Conditions - Summer F	113	db	0 -100% RH		
12	Housing Interior Chemical Exposure	DELETED				
13	Site Storage Conditions - Winter F	(-) 23		Radiological Dose Level per Hr		
14	Indoor Design Temperature - Winter F	59		Radiological Dose Level for Facility Life - 40years		7.2×10^8 Rem

15 PERFORMANCE RATING

16	Design Flow Rate (CFM)	10000	Leakage Rate @ Design Flow &		15 SCFM
17	Maximum Operating Pressure (in wc)	(-) 80"	Max Pressure (CFM)		
18	Maximum Design Pressure (in wc)	(-) 120"	Assembly Clean Pressure Drop with Filters (in wc)		5.5"
19	Total Filter Openings Required	6	Weight with HEPA Filters (pounds)		*
20	No. Filters per Bank	5	Weight without HEPA Filters (pounds)		•

21 CONSTRUCTION

22	Design Housing Manufacturer:	•	Design Housing Model Number:	*
23	Housing Construction Method:	All Welded		
24	Housing Material:	Type 304L Stainless Steel	Housing Material Gauge:	•
25	Top Panel Material:	Type 304L Stainless Steel	Top Panel Material Gauge:	*
26	Structural Frame Material:	Type 304L Stainless Steel	Structural Frame Features:	*
27	Inlet Plenum Total Volume:	*	Outlet Plenum Total Volume	•
28	Inlet Position: (Top/Side)	Side	Outlet Position: (Top/Side)	Side
29	Inlet Inside Dimensions: (inches)	20" Nom.Diam.	Outlet Inside Dimensions: (inches)	20" Nom. Diam.
30		See Note 5.		See Note 5.
31	Inlet Connection Type:	Welded	Outlet Connection Type:	Welded
32	Inlet Flange Bolt Required:	N/A	Outlet Flange Bolts Required:	N/A
33	Inlet Flange Bolt Size:	N/A	Outlet Flange Bolt Size:	N/A
34	Inlet Flange Bolt Material:	N/A	Outlet Flange Bolt Material:	N/A
35	Inlet Flange Gasket Material:	N/A	Outlet Flange Gasket Material:	N/A
36	Paint and Finish Material:	N/A	Paint and Finish Material Minimum Thickness:	N/A

37 HOUSING ACCESSORIES

38	Accessory Provided	Yes	No	Accessory Information	
39	Test w/Inlet Isolation Damper:	X		Damper Provided By:	Vendor
40	See Note 7			Inlet Isolation Damper Type:	Gate
41				Inlet Isolation Damper Size:	20" Nominal Diameter
42	Inlet Transition Ductwork:	X		Inlet Transition Ductwork	DELETED
43				Overall Length: (inches)	
44				Inlet Transition Smallest	20" Nominal Diameter
45				Inside Dimension: (inches)	See Note 5.
46				Inlet Transition Largest	20" Nominal Diameter
47				Inside Dimension: (inches)	See Note 5.
48	Inlet Aerosol Test Port Criteria:	X		Challenge Aerosol Connection Type:	*
49	See Note 8			Challenge Aerosol Connection Size:	*
50				Challenge Aerosol Connection Quantity:	*
51					
52					

REMOTE-CHANGE HEPA FILTER HOUSING Data Sheet: 24590-HLW-MAD-PJV-P0006

MR No.	
DELETED	
Plant Item No.	Rev No.
24590-HLW-MK-PJV-HEPA-00004B	0

1	Project:	RPP-WTP	Bldg./Rm #	HLW / H-0104	Manufacturer: *	
2	Project No.:	24590	Supporting Calculations	DELETED		
3	Site:	DOE Hanford			Manufacturer Part No: *	
4	Safety Class	SDC	Associated Drawings	24590-HLW-M6-PJV-P0002		
5	Seismic Category	SC-I			Quantity Required	1
6	System No.	PJV	System Desc.	Pulse Jet Vent System	Quality Level	QL-1
7	Description: HLW Pulse Vent System - Primary "Active" Housing					
8						

9 HOUSING ACCESSORIES (continued)

10	**Accessory Provided**	**Yes**	**No**	Total Number of Viewing Ports Required:	N/A	
11	Inlet Viewing Ports		X	Inlet Viewing Port Type:	N/A	
12				Inlet Viewing Port Locations:	N/A	
13				Inlet Viewing Port	N/A	Width
14				Dimensions: (inches)	N/A	Length
15	Internal Fire Suppression:		X	Fire Suppression System Description:	N/A	
16				Accessory Information	1 per bank	
17	Vacuum-Relief Vent Assembly:	X		Number Required:	*	
18				Vacuum-Relief Vent Assembly Setpoint:	*	
19				Vacuum-Relief Vent Assembly Manufacturer:	*	
20				Vacuum-Relief Vent Model Number:	N/A	
21	Test w/Outlet Isolation Damper:		X	Damper Provided By:	N/A	
22				Outlet Isolation Damper Type:	N/A	
23				Outlet Isolation Damper Size:	20" Nominal Diameter	
24	Outlet Transition Ductwork:	X		Outlet Transition Ductwork Overall Length: (inches)	DELETED	
25						
26				Outlet Transition Smallest Inside Dimension:(inches)	20" Nominal Diameter	
27						
28				Outlet Transition Largest Inside Dimension: (inches)	20" Nominal Diameter	
29						
30	Outlet Aerosol Test Port Criteria:	X		Challenge Aerosol Connection Type:	*	
31				Challenge Aerosol Connection Size:	*	
32				Challenge Aerosol Connection Quantity:	*	
33	Outlet Viewing Ports:		X	Total Number of Viewing Ports Required:	N/A	
34				Outlet Viewing Port Type:	N/A	
35				Outlet Viewing Port Locations:	N/A	
36				Outlet Viewing Port	N/A	Width
37				Dimensions: (inches)	N/A	Length
38	Differential Pressure Taps:	X		Differential Pressure Tap Size: (inches)	1/2-inch SW	
39	Drain Connection:	See Note 9		Drain Connection Size: (inches)	N/A	
40	Drain Connection Valve:		X	Drain Connection Valve Size: (inches)	1 1/2"	
41				PVC Safe Change Bag Type:	N/A	

42 UTILITY REQUIREMENTS

43	Electrical: (volts/phase/hertz)	N/A
44	Compressed Air:	N/A
45	Intrumentation Taps:	3/4-inch SW
46	Pressure/Leak Test Ports	*
47	Air/Aerosol Mixing Test Ports	*
48		
49		
50		
51		
52		
53		

REMOTE-CHANGE HEPA FILTER HOUSING Data Sheet: 24590-HLW-MAD-PJV-P0006

MR No.	
DELETED	
Plant Item No.	Rev No.
24590-HLW-MK-PJV-HEPA-00004B	0

1	Project:	RPP-WTP	Bldg./Rm #	HLW / H-0104	Manufacturer: *	
2	Project No.:	24590	Supporting Calculations	DELETED		
3	Site:	DOE Hanford			Manufacturer Part No: *	
4	Safety Class	SDC	Associated Drawings	24590-HLW-M6-PJV-P0002		
5	Seismic Category	SC-I			Quantity Required	1
6	System No.	PJV	System Desc.	Pulse Jet Vent System	Quality Level	QL-1
7	Description: HLW Pulse Vent System - Primary "Active" Housing					
8						
9	Remarks: * Data to be provided by Vendor.					

10 **Notes:**

11 **1.) Vendor to fill in data with (*) asterisk.**

12 **2.) DELETED**

13 **3.) DELETED.**

14 **4.) DELETED.**

15 **5.) Inlet and Outlet I.D.'s to match I.D. of 20", 0.375" nominal wall thickness Stainless Steel Pipe.**

16 **6.) N/A denotes "Not Applicable".**

17 **7.) During Shop Test, Contractor may use a temporary valve or a blank-off plate.**

18 **8.) Aerosol test ports include injection and sampling at each stage.**

19 **9.) 1 1/2" plugged drain at low point in the plenum.**

20 **10.) Sealing materials and mechanism shall comply with ASME AG-1.**

ERIC B. ISERN
STATE OF WASHINGTON
33449
REGISTERED
PROFESSIONAL ENGINEER
10/4/04
EXPIRES: 07/28/05

Please note that source, special nuclear and byproduct materials, as defined in the Atomic Energy Act of 1954 (AEA), are regulated at the U.S. Department of Energy (DOE) facilities exclusively by DOE acting pursuant to its AEA authority. DOE asserts, that pursuant to the AEA, it has sole and exclusive responsibility and authority to regulate source, special nuclear, and byproduct materials at DOE-owned nuclear facilities. Information contained herein on radionuclides is provided for process description purposes only.

Rev	Date	Description	Originator	Checker	Approver
0	10/4/04	Issued for Permitting Use	M. Ordona		

REMOTE-CHANGE HEPA FILTER HOUSING Data Sheet: 24590-HLW-MAD-PJV-P0007

MR No.	R10397027
DELETED	ISSUED BY RPP-WTP PDC
Plant Item No.	Rev No.
24590-HLW-MK-PJV-HEPA-00005B	0

1	Project:	RPP-WTP	Bldg./Rm #	HLW / H-0104	Manufacturer:	*
2	Project No.	24590	Supporting Calculations	DELETED		
3	Site:	DOE Hanford			Manufacturer Part No:	*
4	Safety Class	SDC	Associated Drawings	24590-HLW-M6-PJV-P0002		
5	Seismic Category	SC-I			Quantity Required	1
6	System No.	PJV	System Desc.	Pulse Jet Vent System	Quality Level	QL-1
7	Description: HLW Pulse Vent System - Primary "Active" Housing					
8						

9 DESIGN CONDITIONS

10	Zone Design Temperature- Summer F	113		Maximum/ Normal Inlet Air Temperature F	136 F	70 F
11	Site Storage Conditions - Summer F	113	db	0 -100% RH		
12	Housing Interior Chemical Exposure	DELETED				
13	Site Storage Conditions - Winter F	(-) 23		Radiological Dose Level per Hr		
14	Indoor Design Temperature - Winter F	59		Radiological Dose Level for Facility Life - 40years		7.2×10^8 Rem

15 PERFORMANCE RATING

16	Design Flow Rate (CFM)	10000		Leakage Rate @ Design Flow &		15 SCFM
17	Maximum Operating Pressure (in wc)	(-) 80"		Max Pressure (CFM)		
18	Maximum Design Pressure (in wc)	(-) 120"		Assembly Clean Pressure Drop with Filters (in wc)		5.5"
19	Total Filter Openings Required	6		Weight with HEPA Filters (pounds)		*
20	No. Filters per Bank	5		Weight without HEPA Filters (pounds)		•

21 CONSTRUCTION

22	Design Housing Manufacturer:	•	Design Housing Model Number:	*
23	Housing Construction Method:	All Welded		
24	Housing Material:	Type 304L Stainless Steel	Housing Material Gauge:	*
25	Top Panel Material:	Type 304L Stainless Steel	Top Panel Material Gauge:	•
26	Structural Frame Material:	Type 304L Stainless Steel	Structural Frame Features:	*
27	Inlet Plenum Total Volume:	•	Outlet Plenum Total Volume	*
28	Inlet Position: (Top/Side)	Side	Outlet Position: (Top/Side)	Side
29	Inlet Inside Dimensions: (inches)	20" Nom.Diam.	Outlet Inside Dimensions: (inches)	20" Nom. Diam.
30		See Note 5.		See Note 5.
31	Inlet Connection Type:	Welded	Outlet Connection Type:	Welded
32	Inlet Flange Bolt Required:	N/A	Outlet Flange Bolts Required:	N/A
33	Inlet Flange Bolt Size:	N/A	Outlet Flange Bolt Size:	N/A
34	Inlet Flange Bolt Material:	N/A	Outlet Flange Bolt Material:	N/A
35	Inlet Flange Gasket Material:	N/A	Outlet Flange Gasket Material:	N/A
36	Paint and Finish Material:	N/A	Paint and Finish Material Minimum Thickness:	N/A

37 HOUSING ACCESSORIES

38	Accessory Provided	Yes	No	Accessory Information	
39	Test w/Inlet Isolation Damper:	X		Damper Provided By:	Vendor
40	See Note 7			Inlet Isolation Damper Type:	Gate
41				Inlet Isolation Damper Size:	20" Nominal Diameter
42	Inlet Transition Ductwork:	X		Inlet Transition Ductwork	DELETED
43				Overall Length: (inches)	
44				Inlet Transition Smallest	20" Nominal Diameter
45				Inside Dimension: (inches)	See Note 5.
46				Inlet Transition Largest	20" Nominal Diameter
47				Inside Dimension: (inches)	See Note 5.
48	Inlet Aerosol Test Port Criteria:	X		Challenge Aerosol Connection Type:	*
49	See Note 8			Challenge Aerosol Connection Size:	*
50				Challenge Aerosol Connection Quantity:	•
51					
52					

REMOTE-CHANGE HEPA FILTER HOUSING Data Sheet: 24590-HLW-MAD-PJV-P0007

MR No.	
DELETED	
Plant Item No.	Rev No.
24590-HLW-MK-PJV-HEPA-00005B	0

1	Project:	RPP-WTP	Bldg./Rm #	HLW / H-0104	Manufacturer: *	
2	Project No.:	24590	Supporting Calculations	DELETED		
3	Site:	DOE Hanford			Manufacturer Part No: *	
4	Safety Class	SDC	Associated Drawings	24590-HLW-M6-PJV-P0002		
5	Seismic Category	SC-I			Quantity Required	1
6	System No.	PJV	System Desc.	Pulse Jet Vent System	Quality Level	QL-1
7	Description: HLW Pulse Vent System - Primary "Active" Housing					
8						

9 HOUSING ACCESSORIES (continued)

10	**Accessory Provided**	**Yes**	**No**	Total Number of Viewing Ports Required:	N/A	
11	Inlet Viewing Ports		X	Inlet Viewing Port Type:	N/A	
12				Inlet Viewing Port Locations:	N/A	
13				Inlet Viewing Port	N/A	Width
14				Dimensions: (inches)	N/A	Length
15	Internal Fire Suppression:		X	Fire Suppression System Description:	N/A	
16				Accessory Information	1 per bank	
17	Vacuum-Relief Vent Assembly:	X		Number Required:	*	
18				Vacuum-Relief Vent Assembly Setpoint:	*	
19				Vacuum-Relief Vent Assembly Manufacturer:	*	
20				Vacuum-Relief Vent Model Number:	N/A	
21	Test w/Outlet Isolation Damper:		X	Damper Provided By:	N/A	
22				Outlet Isolation Damper Type:	N/A	
23				Outlet Isolation Damper Size:	20" Nominal Diameter	
24	Outlet Transition Ductwork:	X		Outlet Transition Ductwork Overall Length: (inches)	DELETED	
25						
26				Outlet Transition Smallest Inside Dimension:(inches)	20" Nominal Diameter	
27						
28				Outlet Transition Largest Inside Dimension: (inches)	20" Nominal Diameter	
29						
30	Outlet Aerosol Test Port Criteria:	X		Challenge Aerosol Connection Type:	*	
31				Challenge Aerosol Connection Size:	*	
32				Challenge Aerosol Connection Quantity:	*	
33	Outlet Viewing Ports:		X	Total Number of Viewing Ports Required:	N/A	
34				Outlet Viewing Port Type:	N/A	
35				Outlet Viewing Port Locations:	N/A	
36				Outlet Viewing Port	N/A	Width
37				Dimensions: (inches)	N/A	Length
38	Differential Pressure Taps:	X		Differential Pressure Tap Size: (inches)	1/2-inch SW	
39	Drain Connection:	See Note 9		Drain Connection Size: (inches)	N/A	
40	Drain Connection Valve:		X	Drain Connection Valve Size: (inches)	1 1/2"	
41				PVC Safe Change Bag Type:	N/A	

42 UTILITY REQUIREMENTS

43	Electrical: (volts/phase/hertz)	N/A
44	Compressed Air:	N/A
45	Intrumentation Taps:	3/4-inch SW
46	Pressure/Leak Test Ports	*
47	Air/Aerosol Mixing Test Ports	*
48		
49		
50		
51		
52		
53		

REMOTE-CHANGE HEPA FILTER HOUSING Data Sheet: 24590-HLW-MAD-PJV-P0007

MR No	DELETED
Plant Item No	24590-HLW-MK-PJV-HEPA-00005B
Rev No.	0

1	Project:	RPP-WTP	Bldg./Rm #	HLW / H-0104	Manufacturer:	*
2	Project No.:	24590	Supporting Calculations	DELETED		
3	Site:	DOE Hanford			Manufacturer Part No:	*
4	Safety Class	SDC	Associated Drawings	24590-HLW-M6-PJV-00002		
5	Seismic Category	SC-I			Quantity Required	1
6	System No.	PJV	System Desc.	Pulse Jet Vent System	Quality Level	QL-1
7	Description: HLW Pulse Vent System - Primary "Active" Housing					
8						
9	Remarks: * Data to be provided by Vendor.					

10 **Notes:**

11 **1.) Vendor to fill in data with (*) asterisk.**

12 **2.) DELETED**

13 **3.) DELETED.**

14 **4.) DELETED.**

15 **5.) Inlet and Outlet I.D.'s to match I.D. of 20", 0.375" nominal wall thickness Stainless Steel Pipe.**

16 **6.) N/A denotes "Not Applicable".**

17 **7.) During Shop Test, Contractor may use a temporary valve or a blank-off plate.**

18 **8.) Aerosol test ports include injection and sampling at each stage.**

19 **9.) 1 1/2" plugged drain at low point in the plenum.**

20 **10.) Sealing materials and mechanism shall comply with ASME AG-1.**

ERIC B. ISERN
STATE OF WASHINGTON
33449
REGISTERED
PROFESSIONAL ENGINEER
10/4/04
EXPIRES 07/28/05

Please note that source, special nuclear and byproduct materials, as defined in the Atomic Energy Act of 1954 (AEA), are regulated at the U.S. Department of Energy (DOE) facilities exclusively by DOE acting pursuant to its AEA authority. DOE asserts, that pursuant to the AEA, it has sole and exclusive responsibility and authority to regulate source, special nuclear, and byproduct materials at DOE-owned nuclear facilities. Information contained herein on radionuclides is provided for process description purposes only.

Rev	Date	Description	Originator	Checker	Approver
0	10/4/04	Issued for Permitting Use	M. Ordona		

R10484664

MECHANICAL DATA SHEET

PLATE HEAT EXCHANGER

ISSUED BY RPP-WTP PDC

PLANT ITEM No.
24590-HLW-ME-HOP-HX-00002

Data Sheet Number:
24590-HLW-MED-HOP-P0012 Rev. 1

Project:	**RPP-WTP**	Description:	**Silver Mordenite Preheater @ 0' Elv. - Room H-A123**
Project No:	**24590**	Specification:	**N/A**
Site:	**Hanford**	P&ID:	**24590-HLW-M6-HOP-P0003**
Process flow diagram:	**24590-HLW-M5-V17T-P0004**	Process Data Sht:	**Deleted**

1

Reference Data

Quality Level	***QL-2***	Flow Type	*** IU**
Seismic Category	***SC-III***	Heat Exchanger Duty (Design with Base surface) Btu/hr	**• 465,201**
Design Code	***Note 4***	Heat Exchanger Area (with Oversurface) ft^2	**• 1920**
Code Stamp	***No***	ΔT (LMTD) (Design) °F	**• 63.5**
NB Registration	***No***	Overall Heat Transfer Coefficient (Design) Btu / hr-ft^2-°F	**• 3.66**

Mechanical Design Data

		Hot Side		Cold Side	
Design Pressure (max. / min.)	psig	***5***	***-5***	***5***	***-5***
Design Temperature (max. / min.)	°F	***500***	***59***	***500***	***59***
Corrosion Allowance	inch	***none***		***none***	
Erosion Allowance	inch	***none***		***none***	
Hydro/Pneumatic Test Pressure	psig	***per code***			
Insulation Type		***Calcium Silicate rigid block (note 7)***			
Insulation Thickness	inch	***Vendor to specify for 140° F surface temperature and meet Note 10***			
Thermal Cycling: Design min to max temp	cycles/yr	***1***			

Process Design Data

		Hot Side	Cold Side
Design Flow Rate	SCFM	***2000***	***2000***
Design Density (Avg)	lb/ft^3	***0.038***	***0.047***
Design Inlet Temperature	°F	***500***	***250***
Outlet Temperature (Base Area)	°F	*** 317 (Note 11)**	*** 436 (Note 11)**
Outlet Temperature (With Oversurface area)	°F	*** 315.5 (Note 11)**	**• 438 (Note 11)**
Specific Heat (Avg)	Btu/lbm-°F	***0.30***	***0.29***
Heat Recovery Efficiency	%	***70***	
Fouling Resistance	hr-ft^2-°F / Btu	***0.000757***	
Pressure Drop (Maximum Allowable)	in-WG	***4***	***4***
Overall Flange Inleakage	SCFM	***<1***	
Oversurface (minimum)	%	***15***	

Material Data

Plates	***SA-240 316L***	Nozzles/Flanges	***SS T316L***
End Covers	***SA-240 316L***	Removable Shroud	***N/A***
Hot Side Gaskets	***None (Note 6)***	Cold Side Gaskets	***None (Note 6)***
Tightening Bolts	***None***	Tightening Nuts	***None***

Construction Data

		Hot Side Piping		Cold Side Piping	
Inlet (Size/Connection Type)	inch	***16"***	***150 lb RF Flange***	***14"***	***150 lb RF Flange***
Outlet (Size/Connection Type)	inch	***14"***	***150 lb RF Flange***	***14"***	***150 lb RF Flange***
Plates Total Number (Supplied/Max) ***(Note 6)***		64/64		Plate Dimensions (LxWxThk) inch	**120 x 36 x 0.05**
Overall Unit Size (LxWxH)	inch	***(Note 2)****			
Weight lbf	***(Note 3)***	Operating Weight lbf	***(Note 3)***	Test Weight lbf	*

BECHTEL	**MECHANICAL DATA SHEET** **PLATE HEAT EXCHANGER**	**PLANT ITEM No.** **24590-HLW-ME-HOP-HX-00002** **Data Sheet Number:** **24590-HLW-MED-HOP-P0012 Rev. 1**

Thermal/Hydraulic Data

Maximum Conditions

		Hot Side		Cold Side	
Fluid Name		***Melter Offgas***		***Melter Offgas***	
		IN	***OUT***	***IN***	***OUT***
Fluid Quantities: Total (In/Out)	lbm/hr	***7529***	***7529***	***6392***	***6392***
(Note 13) Condensable Vapor (In/Out)		***775***	***775***	***684***	***684***
Liquid (In/Out)		***0***	***0***	***0***	***0***
Noncondensable (In/Out)		***6754***	***6754***	***5708***	***5708***
Temperature (In/Out) (with Oversurface)	°F	***443***	*** 281 (Note 11)**	***205***	*** 399 (Note 11)**
Density	lb/ft³	***0.034***	***0.042***	***0.052***	***0.041***
Viscosity	Cp	***0.0263***	***0.0225***	***0.0208***	***0.0247***
Molecular Weight, Vapor		***18***	***18***	***18***	***18***
Molecular Weight, Noncondensable		***28***	***28***	***28***	***28***
Specific Heat	Btu/lbm-°F	***0.311***	***0.291***	***0.281***	***0.301***
Thermal Conductivity	Btu/hr-ft-°F	***0.023***	***0.019***	***0.017***	***0.021***
Inlet pressure	psia	***12.0***		***13.2***	
Pressure Drop (with Oversurface)	in-WG	*** 0.45**		*** 0.31**	
Heat Recovery	%	*** 80%**			

△1

Normal Conditions

		Hot Side		Cold Side	
Fluid Name		***Melter Offgas***		***Melter Offgas***	
		IN	***OUT***	***IN***	***OUT***
Fluid Quantities: Total (In/Out)	lbm/hr	***6622***	***6622***	***5537***	***5537***
(Note 13) Condensable Vapor (In/Out)		***364***	***364***	***327***	***327***
Liquid (In/Out)		***0***	***0***	***0***	***0***
Noncondensable (In/Out)		***6258***	***6258***	***5210***	***5210***
Temperature (In/Out) (with Oversurface)	°F	***434***	*** 254 (Note 11)**	***168***	*** 387 (Note 11)**
Density	lb/ft³	***0.038***	***0.047***	***0.057***	***0.044***
Viscosity	Cp	***0.0265***	***0.0223***	***0.0203***	***0.0248***
Molecular Weight, Vapor		***18***	***18***	***18***	***18***
Molecular Weight, Noncondensable		***28***	***28***	***28***	***28***
Specific Heat	Btu/lbm-°F	***0.282***	***0.27***	***0.265***	***0.278***
Thermal Conductivity	Btu/hr-ft-°F	***0.022***	***0.018***	***0.016***	***0.021***
Inlet pressure	psia	***12.8***		***13.6***	
Pressure Drop (with Oversurface)	in-WG	*** 0.33**		*** 0.22**	
Heat Recovery	%	*** 82%**			

BECHTEL	**MECHANICAL DATA SHEET** **PLATE HEAT EXCHANGER**	**PLANT ITEM No.** **24590-HLW-ME-HOP-HX-00002** **Data Sheet Number:** **24590-HLW-MED-HOP-P0012 Rev. 1**

Notes

1. ***Items identified with an asterisk* are determined and or confirmed by the Vendor.***
2. ***Bounding dimensions not to exceed: 150" L x 56" W x 72" H.***
3. ***The weight shall not exceed 10,000 lbs.***
4. ***The heat exchanger pressure boundary shall be designed to ASME Section VIII, Div 1.***
5. ***Vendor to design the heat exchanger to the Mechanical and Process Design Data, and provide performance data as indicated for Normal and Maximum Conditions.***
6. ***Plates shall be all welded assembly, no gasketed joints allowed.***
7. ***Vendor to provide insulation mounted on exterior of unit.***
8. ***Not Used.***
9. ***There shall be no leakage between hot side and cold side.***
10. ***The total heat loss from the heat exchanger shall not exceed 1.5 kW.***
11. ***For the Process Design Data, Vendor shall provide the outlet temperatures for both the Base surface area and the Oversurface area. For the Maximum and Normal Conditions, provide the outlet temperatures based on Oversurface area.***
12. ***The temperature of the floor shall not exceed 100 °F. The temperature of the local imbeds shall not exceed 150 °F.***
13. ***Condensate vapor present in offgas is steam. There are no liquids present in the offgas stream.***
14. ***The Cold Side flow shall be in the straight pass (i.e., I) and the Hot Side flow in the U-pass.***
15. ***Contents of this document are Dangerous Waste Permit Affecting.***

Please note that source, special nuclear and byproduct materials, as defined in the Atomic Energy Act of 1954 (AEA), are regulated at the U.S. Department of Energy (DOE) facilities exclusively by DOE acting pursuant to its AEA authority. DOE asserts, that pursuant to the AEA, it has sole and exclusive responsibility and authority to regulate source, special nuclear, and byproduct materials at DOE-owned nuclear facilities. Information contained herein on radionuclides is provided for process description purposes only.

ERIC B. ISERN
STATE OF WASHINGTON
33449
REGISTERED
PROFESSIONAL ENGINEER
2/15/05
EXPIRES: 07/28/05

This bound document contains a total of 3 sheets

Rev	Description	System Engr	Equip Engr	Checked	Reviewed	Approved	Date
1	**Re-Issued for Permitting Use**	R. Tometzyak	N/A				2/15/05
0	**Issued For Permitting Use**	K. Kirschenheiter	N/A	S. Shah	C. Winkler	M. Hoffmann	4/21/04

R10305226

BECHTEL	**MECHANICAL DATA SHEET** **HEPA PREHEATER**	**PLANT ITEM No.** 24590-HLW-ME-HOP-HTR-00002A 24590-HLW-ME-HOP-HTR-00001B 24590-HLW-ME-HOP-HTR-00005A 24590-HLW-ME-HOP-HTR-00005B
	ISSUED BY RPP-WTP PDC INIT DATE	**Data Sheet Number** 24590-HLW-MED-HOP-P0013 — **Rev** 0

Project:	**RPP-WTP**	Description:	**HOP HEPA Preheater**
Project No:	**24590**	Specification:	**24590-HLW-3PS-MEE0-TP001**
Site:	**Hanford**	P&ID:	**24590-HLW-M6-HOP-P0010, P20010**
Process flow diagram:	**24590-HLW-M5-V17T-P0003, P20003**	Process Data Sht:	**Deleted**

Reference Data

	Pressure Boundary	Elements & Control Panel	
Quality Level	***QL-2***	***QL-2***	
Seismic Category	***SC-I***	***SC-I***	
Design Code	***ASME VIII, Div 1***	***See Specification***	
Code Stamp	***No***	***No***	
NB Registration	***No***	***No***	

Operating Process Data (from Process Data Sheet, unless noted otherwise)

		Normal		Maximum	
Fluid Name		***Offgas***		***Offgas***	
Mass Flow Rate	lbm/hr	***5772***		***7413***	
Temperature (In/Out)	°F	***125***	***161 (1)***	***141***	***177 (1)***
Relative Humidity (In/Out*)	%	***92.8***	*	***100***	*
Density (In)	lb/ft³	***0.056***		***0.051***	
Viscosity (In)	cP	***0.019***		***0.019***	
Specific Heat	Btu/lbm-°F	***0.270***		***0.279***	
Inlet Pressure	psia	***12.4***		***11.5***	
Inlet Velocity	ft/s	***59 (2)***		***81 (2)***	
Pressure Drop* (actual)	in-WG	*		*	
Heater Duty	kW	***17 (3)***		***21 (3)***	
Single Element Mean Time to Failure*	hours	*		*	

Please note that source, special nuclear and byproduct materials, as defined in the Atomic Energy Act of 1954 (AEA), are regulated at the U.S. Department of Energy (DOE) facilities exclusively by DOE acting pursuant to its AEA authority. DOE asserts, that pursuant to the AEA, it has sole and exclusive responsibility and authority to regulate source, special nuclear, and byproduct materials at DOE-owned nuclear facilities. Information contained herein on radionuclides is provided for process description purposes only.

MARK W. HOFFMANN
STATE OF WASHINGTON
0030952
REGISTERED
PROFESSIONAL ENGINEER

4/19/04

EXPIRES 12/10/04

This bound document contains a total of 4 sheets

REV	DATE	REASON FOR REVISION	PREPARER	CHECKER	REVIEWER	APPROVER
0	4/18/04	Issued for Permitting Use				

	MECHANICAL DATA SHEET **HEPA PREHEATER**	**PLANT ITEM No.** **24590-HLW-ME-HOP-HTR-00002A** **24590-HLW-ME-HOP-HTR-00001B** **24590-HLW-ME-HOP-HTR-00005A** **24590-HLW-ME-HOP-HTR-00005B** **Data Sheet Number** **Rev** **24590-HLW-MED-HOP-P0013** **0**

Mechanical/Process Design Data

Design Conditions (max/min)	psig @ °F	***0 @ 59***	***-6 @ 192***
Corrosion/Erosion Allowance	inch	***0.04***	
Hydro/Pneumatic Test Pressure*	psig	*	
Insulation Type*		•	
Insulation Thickness*	inch	*	
Element Type*		*	
Total Number of Elements*		*	
Max Element Surface Temperature*	°F	*	
Max Element Pocket Surface Temp	°F	***500***	
Max Element Failure (Note 3)	%	***25***	
Thermal Cycling, Min to max temp	cycles/yr	***1***	
Flow Rate	SCFM @ 68 °F	***2000***	
Inlet Temperature	°F	***192***	
Outlet Temperature	°F	***228***	
Inlet Humidity	%	***100***	
Outlet Humidity*	%	*	
Max Heater Duty	kW	***25***	
Min Heater Duty	kW	***9***	
Fouling Resistance	hr-ft²-°F / Btu	***None***	
Pressure Drop (Allowable)	in-WG	***5***	

Mechanical/Process Design Data (cont)

Max Concrete Interface Temp	°F	***Note 4***

Material Data

Plenum	***316L***	In-Cast Liner	***Carbon Steel***
Element Pockets	***316L***	Gaskets*	*
Shield Plate	***Carbon Steel***	Heating Elements*	*
Mounting Frame	***Carbon Steel***		
Bolting*	*		

Construction Data

(To be determined by the supplier when not specified by the buyer)

Inlet (Size/Connection Type)	inch		***10 Sch 10S***	***Butt Weld***
Outlet (Size/Connection Type)	inch		***12 Sch 10S***	***Butt Weld***
Size (LxWxH)*	inch		***Note 2***	
Available Element Pull Space	inch		***48***	
Weight*	lb	•	Shipping Weight* lb	•

Power and Control

See Specification

Notes

1. ***Items identified with an asterisk* are determined by the Vendor.***
2. ***The bounding dimensions and nozzle locations shall be in accordance with the preliminary sketch on page 4.***
3. ***The maximum element failure is the percent of total elements that can fail and still achieve maximum design heater duty without exceeding the maximum element pocket surface temperature.***
4. ***All heater components, in-cast liner, and mounting frame in contact with concrete shall not exceed 100 °F under any operating scenario. Vendor is responsible for insulation and design to comply with this requirement.***

References

(1) Deleted
(2) Deleted
(3) Deleted

	MECHANICAL DATA SHEET **HEPA PREHEATER**	**PLANT ITEM No.** **24590-HLW-ME-HOP-HTR-00002A** **24590-HLW-ME-HOP-HTR-00001B** **24590-HLW-ME-HOP-HTR-00005A** **24590-HLW-ME-HOP-HTR-00005B**
		Data Sheet Number / **Rev** **24590-HLW-MED-HOP-P0013** / **0**

Preliminary Sketch of HEPA Filter Preheater

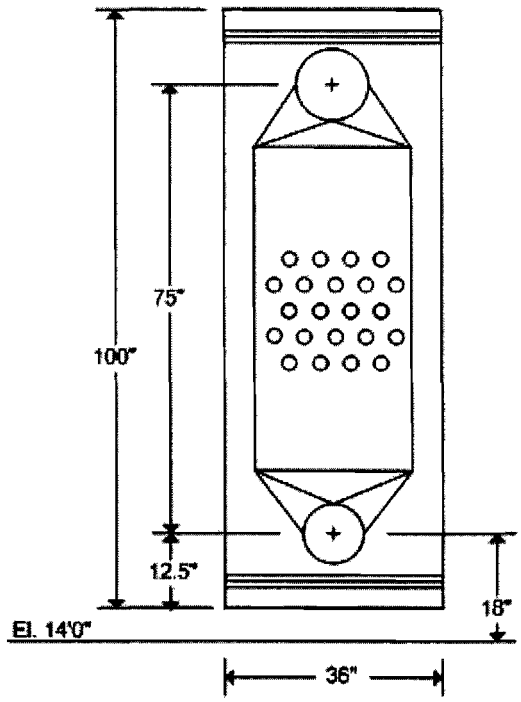

Front View

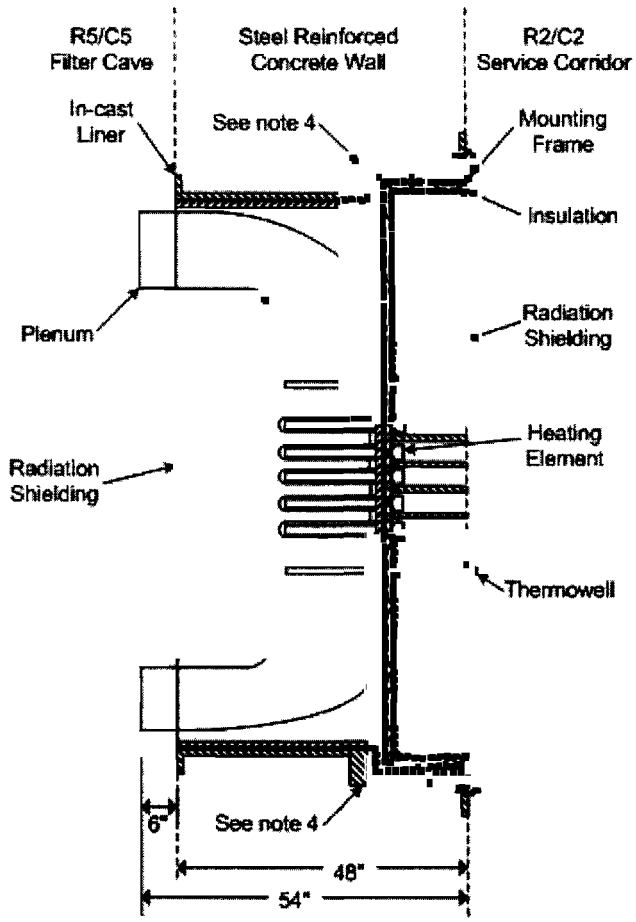

Cross-Section View

R10484663

MECHANICAL DATA SHEET
PLATE HEAT EXCHANGER

ISSUED BY RPP-WTP PDC

PLANT ITEM No. 24590-HLW-ME-HOP-HX-00004

Data Sheet Number: 24590-HLW-MED-HOP-P0017 Rev. 1

Project:	**RPP-WTP**	Description:	**Silver Mordenite Preheater @ 0' Elv. - Room H-A123**
Project No:	**24590**	Specification:	**N/A**
Site:	**Hanford**	P&ID:	**24590-HLW-M6-HOP-P20003**
Process flow diagram:	**24590-HLW-M5-V17T-P20004**	Process Data Sht:	**Deleted**

1

Reference Data

Quality Level	***QL-2***	Flow Type	*** IU**
Seismic Category	***SC-III***	Heat Exchanger Duty (Design with Base surface) Btu/hr	**• 465,201**
Design Code	***Note 4***	Heat Exchanger Area (with Oversurface) ft^2	*** 1920**
Code Stamp	***No***	ΔT (LMTD) (Design) °F	*** 63.5**
NB Registration	***No***	Overall Heat Transfer Coefficient (Design) Btu / hr-ft^2-°F	*** 3.66**

Mechanical Design Data

		Hot Side		Cold Side	
Design Pressure (max. / min.)	psig	***5***	***-5***	***5***	***-5***
Design Temperature (max. / min.)	°F	***500***	***59***	***500***	***59***
Corrosion Allowance	inch	***none***		***none***	
Erosion Allowance	inch	***none***		***none***	
Hydro/Pneumatic Test Pressure	psig	***per code***			
Insulation Type		***Calcium Silicate rigid block (note 7)***			
Insulation Thickness	inch	***Vendor to specify for 140° F surface temperature and meet Note 10***			
Thermal Cycling: Design min to max temp	cycles/yr	***1***			

Process Design Data

		Hot Side	Cold Side
Design Flow Rate	SCFM	***2000***	***2000***
Design Density (Avg)	lb/ft^3	***0.038***	***0.047***
Design Inlet Temperature	°F	***500***	***250***
Outlet Temperature (Base Area)	°F	*** 317 (Note 11)**	**• 436 (Note 11)**
Outlet Temperature (With Oversurface area)	°F	**• 315.5 (Note 11)**	**• 438 (Note 11)**
Specific Heat (Avg)	Btu/lbm-°F	***0.30***	***0.29***
Heat Recovery Efficiency	%	***70***	
Fouling Resistance	hr-ft^2-°F / Btu	***0.000757***	
Pressure Drop (Maximum Allowable)	in-WG	***4***	***4***
Overall Flange Inleakage	SCFM	***<1***	
Oversurface (minimum)	%	***15***	

Material Data

Plates	***SA-240 316L***	Nozzles/Flanges	***SS T316L***
End Covers	***SA-240 316L***	Removable Shroud	***N/A***
Hot Side Gaskets	***None (Note 6)***	Cold Side Gaskets	***None (Note 6)***
Tightening Bolts	***None***	Tightening Nuts	***None***

Construction Data

		Hot Side Piping		Cold Side Piping	
Inlet (Size/Connection Type)	inch	***16"***	***150 lb RF Flange***	***14"***	***150 lb RF Flange***
Outlet (Size/Connection Type)	inch	***14"***	***150 lb RF Flange***	***14"***	***150 lb RF Flange***
Plates Total Number (Supplied/Max) ***(Note 6)***		64/64		Plate Dimensions (LxWxThk) inch	**120 x 36 x 0.05**
Overall Unit Size (LxWxH)	inch	***(Note 2)****			
Weight lbf	***(Note 3)***	Operating Weight lbf	***(Note 3)***	Test Weight lbf	*

BECHTEL	**MECHANICAL DATA SHEET** **PLATE HEAT EXCHANGER**	**PLANT ITEM No.** **24590-HLW-ME-HOP-HX-00004** **Data Sheet Number:** **24590-HLW-MED-HOP-P0017 Rev. 1**

Thermal/Hydraulic Data

Maximum Conditions

		Hot Side		Cold Side	
Fluid Name		***Melter Offgas***		***Melter Offgas***	
		IN	***OUT***	***IN***	***OUT***
Fluid Quantities: Total (In/Out)	lbm/hr	***7529***	***7529***	***6392***	***6392***
(Note 13) Condensable Vapor (In/Out)		***775***	***775***	***684***	***684***
Liquid (In/Out)		***0***	***0***	***0***	***0***
Noncondensable (In/Out)		***6754***	***6754***	***5708***	***5708***
Temperature (In/Out) (with Oversurface)	°F	***443***	*** 281 (Note 11)**	***205***	*** 399 (Note 11)**
Density	lb/ft³	***0.034***	***0.042***	***0.052***	***0.041***
Viscosity	Cp	***0.0263***	***0.0225***	***0.0208***	***0.0247***
Molecular Weight, Vapor		***18***	***18***	***18***	***18***
Molecular Weight, Noncondensable		***28***	***28***	***28***	***28***
Specific Heat	Btu/lbm-°F	***0.311***	***0.291***	***0.281***	***0.301***
Thermal Conductivity	Btu/hr-ft-°F	***0.023***	***0.019***	***0.017***	***0.021***
Inlet pressure	psia	***12.0***		***13.2***	
Pressure Drop (with Oversurface)	in-WG	*** 0.45**		*** 0.31**	
Heat Recovery	%	*** 80%**			

△1

Normal Conditions

		Hot Side		Cold Side	
Fluid Name		***Melter Offgas***		***Melter Offgas***	
		IN	***OUT***	***IN***	***OUT***
Fluid Quantities: Total (In/Out)	lbm/hr	***6622***	***6622***	***5537***	***5537***
(Note 13) Condensable Vapor (In/Out)		***364***	***364***	***327***	***327***
Liquid (In/Out)		***0***	***0***	***0***	***0***
Noncondensable (In/Out)		***6258***	***6258***	***5210***	***5210***
Temperature (In/Out) (with Oversurface)	°F	***434***	*** 254 (Note 11)**	***168***	*** 387 (Note 11)**
Density	lb/ft³	***0.038***	***0.047***	***0.057***	***0.044***
Viscosity	Cp	***0.0265***	***0.0223***	***0.0203***	***0.0248***
Molecular Weight, Vapor		***18***	***18***	***18***	***18***
Molecular Weight, Noncondensable		***28***	***28***	***28***	***28***
Specific Heat	Btu/lbm-°F	***0.282***	***0.27***	***0.265***	***0.278***
Thermal Conductivity	Btu/hr-ft-°F	***0.022***	***0.018***	***0.016***	***0.021***
Inlet pressure	psia	***12.8***		***13.6***	
Pressure Drop (with Oversurface)	in-WG	*** 0.33**		*** 0.22**	
Heat Recovery	%	*** 82%**			

BECHTEL	**MECHANICAL DATA SHEET** **PLATE HEAT EXCHANGER**	**PLANT ITEM No.** **24590-HLW-ME-HOP-HX-00004** **Data Sheet Number:** **24590-HLW-MED-HOP-P0017 Rev. 1**

Notes

1. ***Items identified with an asterisk* are determined and or confirmed by the Vendor.***
2. ***Bounding dimensions not to exceed: 150" L x 56" W x 72" H.***
3. ***The weight shall not exceed 10,000 lbs.***
4. ***The heat exchanger pressure boundary shall be designed to ASME Section VIII, Div 1.***
5. ***Vendor to design the heat exchanger to the Mechanical and Process Design Data, and provide performance data as indicated for Normal and Maximum Conditions.***
6. ***Plates shall be all welded assembly, no gasketed joints allowed.***
7. ***Vendor to provide insulation mounted on exterior of unit.***
8. ***Not Used.***
9. ***There shall be no leakage between hot side and cold side.***
10. ***The total heat loss from the heat exchanger shall not exceed 1.5 kW.***
11. ***For the Process Design Data, Vendor shall provide the outlet temperatures for both the Base surface area and the Oversurface area. For the Maximum and Normal Conditions, provide the outlet temperatures based on Oversurface area.***
12. ***The temperature of the floor shall not exceed 100 °F. The temperature of the local imbeds shall not exceed 150 °F.***
13. ***Condensate vapor present in offgas is steam. There are no liquids present in the offgas stream.***
14. ***The Cold Side flow shall be in the straight pass (i.e., I) and the Hot Side flow in the U-pass.***
15. ***Contents of this document are Dangerous Waste Permit Affecting.***

Please note that source, special nuclear and byproduct materials, as defined in the Atomic Energy Act of 1954 (AEA), are regulated at the U.S. Department of Energy (DOE) facilities exclusively by DOE acting pursuant to its AEA authority. DOE asserts, that pursuant to the AEA, it has sole and exclusive responsibility and authority to regulate source, special nuclear, and byproduct materials at DOE-owned nuclear facilities. Information contained herein on radionuclides is provided for process description purposes only.

ERIC B. ISERN
STATE OF WASHINGTON
33449
REGISTERED
PROFESSIONAL ENGINEER
2/15/05

EXPIRES: 07/28/05

This bound document contains a total of 3 sheets

Rev	Description	System Engr	Equip Engr	Checked	Reviewed	Approved	Date
1	**Re-Issued for Permitting Use**	R. Tomatczak	N/A				2/15/05
0	**Issued For Permitting Use**	K. Kirschenheiter	N/A	S. Shah	C. Winkler	M. Hoffmann	4/21/04

BECHTEL	**MECHANICAL DATA SHEET** **HEPA PREHEATER**	**PLANT ITEM No.** **24590-HLW-ME-PJV-HTR-00002** **Data Sheet Number** / **Rev** **24590-HLW-MED-PJV-P0002** / **0**

Project:	**RPP-WTP**	Description:	**Pulse Ventilation HEPA Electric Preheater**
Project No:	**24590**	Specification:	**24590-HLW-3PS-MEE0-TP001**
Site:	**Hanford**	P&ID:	**24590-HLW-M6-PJV-P0001**
Process flow diagram:	**NA**	Process Data Sht:	**DELETED**

ISSUED BY RPP-WTP PDC

R10409791

Reference Data

	Exhaust Air Pressure Boundary (Note 5)	Heating Elements & Control Panel	C5 Cell Confinement Boundary (Note 6)	Remarks
Quality Level	***AP***	***CM***	***1***	***DELETED***
Seismic Category	***III***	***IV***	***I***	***DELETED***
Important to Safety (ITS)	***No***	***No***	***Yes***	***DELETED***
Design Code	***ASME VIII, Div 1***	***See Specification***	***See Specification***	
Code Stamp	***No***	***No***	***No***	
NB Registration	***No***	***No***	***No***	

Operating Process Data

		Operational Mode		Design	
Fluid Name		***PJM Exhaust Air***		***PJM Exhaust Air***	
Flow rate	scfm @ 68°F	***3700*** (nom. max.) / **1900** (nom. avg.)		***6500*** (instantaneous peak)	
Temperature (Inlet / Outlet)	°F	***76***	*	***76***	*
Relative Humidity (Inlet / Outlet)	%	***24***	*	***24***	*
Density (Inlet)	lbm / ft³	***0.065***		***0.065***	
Viscosity (Inlet)	cP	***0.018***		***0.018***	
Specific Heat	Btu / lbm-°F	***0.25***		***0.25***	
Inlet Pressure	psia	***12.9***		***12.9***	
Inlet Velocity	ft / s	*		*	
Pressure Drop (allowable)	inch WG	*		***1.5***	
Heater Duty	kW or (Btu / hr)	*		***(70,000)***	
Single Element Mean Time to Failure	hours	*		*	

Mechanical/Process Design Data

Mech. Differential Pressure	inch WG @ °F	***±150 @ 60*** (design criteria for structural integrity of the pressure boundary)
Corrosion/Erosion Allowance	inch	***0.04 / none***
Hydro / Pneumatic Test Pressure	psig	***1.1 × Design Conditions*** (pneumatic)
Insulation Type		*
Insulation Thickness	inch	*
Element Type		*
Total Number of Elements		*
Max Element Surface Temperature	°F	*
Max Element Pocket Surface Temp	°F	***500***
Max Element Failure (Note 3)	%	***25***
Thermal Cycling, Min to max temp	cycles / yr	***1***
Flow Rate	scfm @ 68 °F	*
Inlet Temperature	°F	(see Operating Process Data table above)
Outlet Temperature	°F	(see Operating Process Data table above)
Inlet Humidity	%	(see Operating Process Data table above)
Outlet Humidity	%	(see Operating Process Data table above)
Max Heater Duty	kW or (Btu / hr)	*
Min Heater Duty	kW or (Btu / hr)	*
Fouling Resistance	hr-ft²-°F / Btu	***None***
Fluid Pressure Drop	inch WG	* (at the design airflow condition)
Max Concrete Interface Temp (Note 4)	°F	*

BECHTEL	**MECHANICAL DATA SHEET** **HEPA PREHEATER**	**PLANT ITEM No.** **24590-HLW-ME-PJV-HTR-00002** **Data Sheet Number** / **Rev** **24590-HLW-MED-PJV-P0002** / **0**

Material Data

Plenum	***SA 240 304*** (max. 0.030% C, dual certified)	In-Cast Liner	***ASTM A36***
Element Pockets	***SA 240 316*** (max. 0.030% C, dual certified)	Gaskets*	*
Shield Plate	***ASTM A36***	Heating Elements*	*
Mounting Frame	***ASTM A36***		
Bolting*	*		

Construction Data

(To be determined by the supplier when not specified by the buyer)

Inlet (Size/Connection Type)		inch	(note 2)	***ϕ 20", 0.250", BE***	
Outlet (Size/Connection Type)		inch	(note 2)	***ϕ 20", 0.250", BE***	
Size (LxWxH)*		inch	(note 2)		
Available Element Pull Space		inch	***48***		
Weight*	lb	*	Shipping Weight*	lb	*

Power and Control

Power Supply	Volt / Phase / Hertz	***480 / 3 / 60***
		(See abv. tech. spec. for bal. of electrical requirements)

Preliminary Sketch of HEPA Filter Preheater

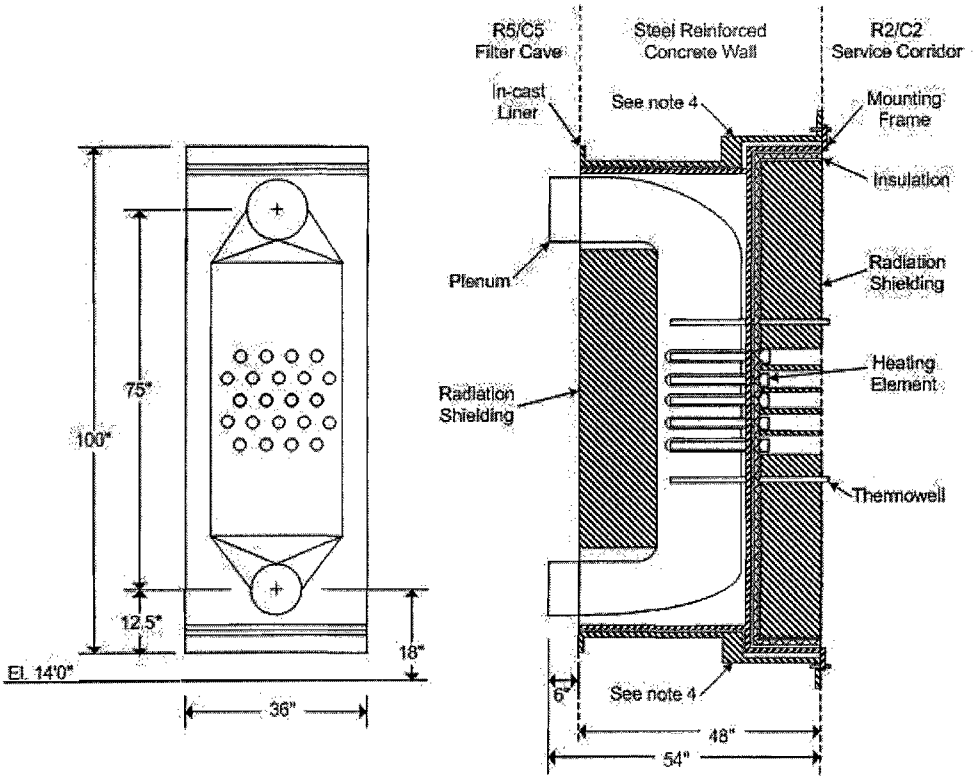

Front View

Cross-Section View

	MECHANICAL DATA SHEET HEPA PREHEATER	PLANT ITEM No. 24590-HLW-ME-PJV-HTR-00002	
		Data Sheet Number 24590-HLW-MED-PJV-P0002	Rev 0

Notes

1. ***Items identified with an asterisk* are determined by the Vendor.***
2. ***The bounding dimensions and nozzle locations shall be in accordance with the preliminary sketch on page 2.***
3. ***The maximum element failure is the percent of total elements that can fail and still achieve maximum design heater duty without exceeding the maximum element pocket surface temperature.***
4. ***The heater components including: the in-cast liner and mounting frame that are in direct contact with the wall shall not exceed 100 °F under any operating scenario. The Vendor is responsible to design his equipment to comply with this requirement.***
5. ***The pressure boundary for the preheater consists of the heater plenum, element pockets, and thermo wells.***
6. ***The C5 Cell Confinement Boundary consists of the in-cast liner, mounting frame, and R5/C5 to R2/C2 radiation shielding.***
7. ***Contents of this document are Dangerous Waste Permit affecting.***

Please note that source, special nuclear and byproduct materials, as defined in the Atomic Energy Act of 1954 (AEA), are regulated at the U.S. Department of Energy (DOE) facilities exclusively by DOE acting pursuant to its AEA authority. DOE asserts, that pursuant to the AEA, it has sole and exclusive responsibility and authority to regulate source, special nuclear, and byproduct materials at DOE-owned nuclear facilities. Information contained herein on radionuclides is provided for process description purposes only.

							11/4/05
0	Issued for Permitting Use	Jason Medina	Jagdish Rewari	Jim Rouse	Steve Cross	Eric Isern	
Rev	Description	System Engr	Equip Engr	Checked	Reviewed	Approved	Date

ERIC B. ISERN
STATE OF WASHINGTON
33449
REGISTERED
PROFESSIONAL ENGINEER
11/4/05
EXPIRES: 07/28/05

MECHANICAL SYSTEMS DATA SHEET: VESSEL

PLANT ITEM No.
24590-HLW-MV-HOP-ABS-00002

R10193251

Project:	RPP-WTP	P&ID:	24590-HLW-M6-HOP-P0008 1
Project No:	24590	Process Data Sheet:	Deleted 1
Project Site:	Hanford	Vessel Drawing 1	24590-HLW-3PS-MBT0-TP001 (Vendor Supplied Dwg's TBD)
Description:	Melter 1 Silver Mordenite Column		

Reference Data

Charge Vessels (Tag Numbers)	None
Pulsejet Mixers / Agitators (Tag Numbers)	None
RFDs/Pumps (Tag Numbers)	None

Design Data

Quality Level		QL-2	Fabrication Specs	24590-HLW-3PS-MBT0-TP001		
Seismic Category		SC-III 1	Design Code 1	ASME AG-1/1a & ASME Section VIII, Div. 1		
Service/Contents		Filtered Radioactive Gas	Code Stamp	No		
Design Specific Gravity		0.588	NB Registration	No		
Maximum Operating Volume	gal	N/A	Weights (lbs)	Empty	Operating	Test
Total Volume	gal	N/A	Estimated	14,200	35,200	35,200
			Actual *	39,600	55,900	55,900 1

Inside Diameter	inch	N/A			Wind Design	Not Required	
Length/Height (TL-TL)	inch	See note 1			Snow Design	Not Required	
		Vessel Operating	Vessel Design	Coil/Jacket Design	Seismic Design	24590-WTP-3PS-FB01-T0001 & 24590-HLW-3PS-MBT0-TP001	
Internal Pressure	psig	0	3 1	N/A	Seismic Base Moment *	ft*lb	TBD
External Pressure	psig	1.3 (see note 3)	3 1	N/A	Postweld Heat Treat	Not Required	
Temperature	°F	330	330 1	N/A	Corrosion Allowance	Inch	0.04
Min. Design Metal Temp.	°F	59			Hydrostatic Test Pressure *	psig	See note 2
Max Operating Pressure Drop	in-WG	10					

Please note that source, special nuclear and byproduct materials, as defined in the Atomic Energy Act of 1954 (AEA), are regulated at the U.S. Department of Energy (DOE) facilities exclusively by DOE acting pursuant to its AEA authority. DOE asserts that pursuant to the AEA, it has sole and exclusive responsibility and authority to regulate source, special nuclear, and byproduct materials at DOE-owned nuclear facilities. Information contained herein on radionuclides is provided for process description purposes only.

MARK W. HOFFMANN
STATE OF WASHINGTON
0030952
REGISTERED
PROFESSIONAL ENGINEER

1/28/04

EXPIRES 12/10/04

ISSUED BY
RPP-WTP PDC
INIT DATE 1/28/04

This bound document contains a total of 3 sheets

REV	DATE	REASON FOR REVISION	PREPARER	CHECKER	REVIEWER	APPROVER
1	1/28/04	Issued for Permitting Use				
0	10/29/02	Issued for Permitting Use	Jessica Jackson	Cliff Slater	n/a	Suzanne Kirk

BECHTEL	**MECHANICAL SYSTEMS DATA SHEET: VESSEL**	**PLANT ITEM No.** ***24590-HLW-MV-HOP-ABS-00002***

Materials of Construction

Component	Material	Minimum Thickness / Size	Containment
Top Head	***N/A***	***N/A***	***N/A***
Shell	***316L***	***1/4" Plate*** 1	***Primary***
Bottom Head	***N/A***	***N/A***	***N/A***
Support	***316L***	***1/4" 3 x 3 angle*** 1	***N/A***
Jacket/Coils/Half-Pipe Jacket	***N/A***	***N/A***	***N/A***
Internals	***316L***	***1/4" Plate*** 1	***N/A***
Pipe	***316L***	***SCH 40***	***N/A***
Forgings/ Bar stock	***N/A***	***N/A***	***N/A***
Gaskets	***Silicone HT*** 1	***N/A***	***N/A***
Bolting	***Varies - See DWGs***	***N/A***	***N/A***

Miscellaneous Data

Orientation	***Horizontal***	Support Type	****TBD***
Insulation Function	***Personnel protection and process temperature control***	Insulation Material	***Calcium Silicate w/0.024" thk, 304 SST Jacket***
Insulation Thickness (inch)	***6"*** 1	Internal Finish	***N/A***
		External Finish	***N/A***

Remarks

* To be determined by the Vendor.

Equipment Cyclic Data Sheet

Component Plant Item Number:	***24590-HLW-MV-HOP-ABS-00002***
Component Description	***Silver Mordenite Column containment housing***

The information below is provisional and envelopes operational duty for fatigue assessment. It is not to be used as operational data.

Materials of Construction	***316L***
Design Life	***40 yr***
Component Function and Life Cycle Description	***Removal of Iodine-129 and other halogens***

Load Type		Min	Max	Number of Cycles	Comment
Design Pressure (-ve/+ve)	psig	***-3*** 1	***+3***	***1***	***Based on 3 yr melter life***
Operating Pressure (-ve/+ve)	psig	***-1.3*** 1	***+1.5***	***13***	***Based on 3 yr melter life***
Operating Temperature	°F	***59***	***330*** 1	***13***	***Based on 3 yr melter life***
Contents Specific Gravity		***0.588***	***0.588***	***N/A***	
Contents Level	inch	***N/A***	***N/A***	***N/A***	***Gas service, flow through operation***
Localized Features					
Nozzles		***Sampling & Testing Connections***		****TBD***	
Air Inlet		***Flange***			
Delivery		***Flange***			
Supports		****TBD***			

Notes

1. *Maximum outside dimensions: 19'-9 1/4" L (w/o insulation) x 15'-3 1/8" W (w/insulation) x 7'-0" H (bottom of column to top of column grating)*
2. *Pneumatic Test of Housing Pressure Boundary per ASME Section VIII, Div 1. All other testing per ASME AG-1/1a & N509*
3. *Normal operating pressure will be 1.3 psig External. The other pressures shown are design, off-normal conditions.*
4. *Deleted* 1
5. *Contents of this document are Dangerous Waste Permit affecting*

R10306118

MECHANICAL SYSTEMS DATA SHEET: SBS

PLANT ITEM No.
24590-HLW-MK-HOP-SCB-00001
24590-HLW-MK-HOP-SCB-00002

Project	**RPP-WTP**	P&ID.	**24590-HLW-M6-HOP-P0001**
Project No	**24590**	Process Data Sheet	**Deleted**
Project Site	**Hanford**	Vessel Drawing	**24590-HLW-MK-HOP-P0001001,1002,1003,1004**
Description	**HLW Submerged Bed Scrubber**		

Reference Data

Charge Vessels (Tag Numbers)	**None**
Pulsejet Mixers / Agitators (Tag Numbers)	**None**
RFDs/Pumps (Tag Numbers)	**None**

ISSUED BY RPP-WTP PDD INIT DATE

Design Data

Quality Level		**QL-2**	Fabrication Specs	**24590-WTP-3PS-MV00-TP001**		
Seismic Category		**SC-2 (Note 1)**	Design Code	**ASME VIII Div 1 (See Note 13)**		
Service/Contents		**Radioactive Liquid**	Code Stamp	**Yes**		
Design Specific Gravity		**1.1**	NB Registration	**Yes**		
Maximum Operating Volume	gal	**3,249**	Weights (lbs)	Empty	Operating	Test
Total Volume	gal	**4,516**	Estimated	**50,790**	**81,900**	**88,490**
			Actual *			

Inside Diameter	inch	**120**			Wind Design	**N/A**	
Length/Height (TL-TL)	inch	**69**			Snow Design	**N/A**	
		Vessel Operating	Vessel Design	Coil/Jacket Design	Seismic Design	**24590-WTP-3PS-MV00-TP002** **24590-WTP-3PS-SS90-T0001**	
Internal Pressure	psig	**ATM**	**15**	**65**	Seismic Base Moment *	ft*lb	
External Pressure	psig	**3.6**	**3.6 (Note 2)**	**-**	Postweld Heat Treat	**Per Code**	
Temperature	°F	**212 (Note 3)**	**237 (Note 4)**	**237**	Corrosion Allowance	inch	**0.08 (Note 7)**
Min. Design Metal Temp	°F	**41**			Hydrostatic Test Pressure *	psig	

Please note that source, special nuclear and byproduct materials, as defined in the Atomic Energy Act of 1954 (AEA), are regulated at the U.S. Department of Energy (DOE) facilities exclusively by DOE acting pursuant to its AEA authority. DOE asserts, that pursuant to the AEA, it has sole and exclusive responsibility and authority to regulate source, special nuclear, and byproduct materials at DOE-owned nuclear facilities. Information contained herein on radionuclides is provided for process description purposes only.

MARK W. HOFFMAN
STATE OF WASHINGTON
0030952
REGISTERED
PROFESSIONAL ENGINEER
4/21/04

EXPIRES 12/10/04

This bound document contains a total of 4 sheets

REV	DATE	REASON FOR REVISION	PREPARER	CHECKER	REVIEWER	APPROVER
0	4/21/04	Issued for Permitting Use				

BECHTEL	**MECHANICAL SYSTEMS DATA SHEET: SBS**	PLANT ITEM No. ***24590-HLW-MK-HOP-SCB-00001*** ***24590-HLW-MK-HOP-SCB-00002***

Materials of Construction

Component	Material	Minimum Thickness / Size	Containment
Top Head	***SB575 N06022***	***See Drawing***	***Auxiliary***
Shell	***SB575 N06022***	***See Drawing***	***Primary***
Bottom Head	***SB575 N06022***	***See Drawing***	***Primary***
Support	***SA240 304 (Note 5)***	***See Drawing***	***N/A***
Internal Coils/External Jacket	***SB622 N06022/ SA312 304 (Note 5)***	***See Drawing***	***N/A***
Internals	***SB575 N06022 / SB622 N06022 (Note 6)***	***See Drawing***	***Thermowell Primary***
Pipe	***SB622 N06022***	***See Drawing***	***Note 8***
Forgings/ Bar stock	***SB564 N06022***	***See Drawing***	***N/A***
Gaskets	***EPDM (Note 12)***	***N/A***	***N/A***
Bolting	***SA193 Grade B16***	***N/A***	***N/A***

Miscellaneous Data

Orientation	***Vertical***	Support Type	***Skirt***
Insulation Function	***None***	Insulation Material	***None***
Insulation Thickness (inch)	***None***	Internal Finish	***Welds descaled as laid***
		External Finish	***Welds descaled as laid***

Notes

* To be determined by the vendor.

Note 1 : Due to the close proximity of SBS Column & Jumpers to the Feed Vessels, SC-2 is assumed in order to protect the Hydrogen Mitigation System.

Note 2 : Design of shell & head under jacket is to be based on 65 psig internal jacket pressure plus 3.6 psi internal vacuum on main vessel.

Note 3 : The vessel normally operates at 140 °F, however, operating fluctuations can allow it to reach 212 °F.

Note 4 : To consider upset condition, the top head cover & top head flange shall be designed to 1250 °F & 945 °F respectively.

Note 5 : SA240 304 & SA312 304 stainless steel material shall have carbon content of 0.030% maximum. Non welded items are excluded from this requirement.

Note 6 : Internal fasteners shall be of alloy N06022 material.

Note 7 : Corrosion allowance of 0.01 inch shall be applied to external surfaces of shell & head exposed to cooling fluid of jacket.

Note 8 : Nozzle necks below the high operating liquid level are primary, the others are auxiliary.

Note 9 : This vessel has an internal removable bed or column. This bed has different operating characteristics than the vessel and is noted in the localized features section on sheet 3.

Note 10 : The internal coils operating pressure is 50 psig and maximum operating temperature is 94 °F.

Note 11 : The bed packing material is ceramic spheres 1" diameter and weigh 115 lb/ft^3.

Note 12 : Gasket material to be confirmed at a later date.

Note 13: PUREX nozzles are excluded from the scope of ASME Code Section VIII, Division 1 in accordance with paragraph U-1 (e)(1).

Equipment Cyclic Data Sheet

Component Plant Item Number:	
Component Description	***Vessel***

The information below is provisional and envelopes operational duty for fatigue assessment. It is not to be used as operational data.

Materials of Construction	***SB575 N06022 (Hastelloy C -22)***
Design Life	***40 years***
Component Function and Life Cycle Description	***The SBS is a semi-passive device designed for aqueous scrubbing of entrained radioactive particulate from the melter offgas. It also serves to cool and condense the melter vapor emissions.*** ***Melter offgas is nominally cooled from 392 °F while feeding (from 752 °F when idled) to 122 °F. Operation within and between these two modes are the predominate conditions the vessel encounter.*** ***Design parameters for the cooling coils is to cool the offgas from 392 °F to a maximum of 140 °F.*** ***Occasional process upsets will direct undiluted offgas to the SBS at temperatures near 1250 °F, where the SBS will cool the gases to 140 °F.*** ***Non-routine maintenance is expected to occur annually. During this period the SBS will be allowed to cool and remain at ambient temperature, from 41 to 100 °F.***

Load Type		Min	Max	Number of Cycles	Comment
Design Pressure	psig	-3.6	15	8	Nominal assumption
Operating Pressure	psig	-2.2	0	40	Bed min. -.36, max. 0. Assume an annual shutdown (40 cycles/life time).
Operating Temperature	°F	104	140	Infinite	Normal operating range
Contents Specific Gravity		1	1.1	40	Nominal operating is 1.1, assume annual flush out and replace with clean water.
Contents Level	inch	Empty	57	120	Nominal operating is 57 inch, assume annual 3x flush out and replace with clean water.
Localized Features					
Nozzle (N11) & Top Head Cover		41 / 392 / 752 / 1250		Assume normal mode is feeding (392), with 40 cycles to upset (1250) and back to idle (752). Assume normal mode is feeding (392) with 2100 cycles to idle (752) and back to feeding. Assume mode is idle (752) with 40 cycle of trip to upset (1250), and return to idle (752). Assume mode is idle (752) with 40 cycle to off (41) and back to idle (752).	
Nozzle (N13)		41 / 70 / 1250		Assume normal mode is feeding (70), with 40 cycles to upset (1250) and back to idle (70). [Unplanned activations] Assume mode is idle (70) with 2100 cycle of trip to upset (1250), and return to idle (70). [Weekly surveillance tests] Assume mode is idle (70) with 40 cycle to off (41) and back to idle (70).	
Cooling supply/returns		41 in, 68 out		Nominally, temperature is 41 in, 68 out. Assume annual cooling outage, in=out=ambient=70 (40 cycles). Assume annual cooling supply failure/isolation during operation, in=out=212 (40 cycles).	
Internal Bed		41 / 140		Assume 40 cycles from running (140), to off (41), then resume (140).	

Remarks

- *Cycle increase: The Seller must increase the numbers of operational cycles given above by 10% to account for commissioning duty unless otherwise noted.*
- *The seller shall consider the conditions of nozzle N11 and N13 happening coincidentally.*
- *Vessel volumes are approximate and do not account for manufacturing tolerances, nozzles, and displacement of internals.*

BECHTEL	**MECHANICAL SYSTEMS DATA SHEET: VESSEL**	**PLANT ITEM No.** ***24590-HLW-MV-HOP-ABS-00003***

R1119325D

Project:	***RPP-WTP***	P&ID:	***24590-HLW-M6-HOP-P20008***
Project No:	***24590***	Process Data Sheet:	***Deleted***
Project Site:	***Hanford***	Vessel Drawing	***24590-HLW-3PS-MBT0-TP001 (Vendor Supplied Dwg's TBD)***
Description:	***Melter 2 Silver Mordenite Column***		

Reference Data

Charge Vessels (Tag Numbers)	***None***
Pulsejet Mixers / Agitators (Tag Numbers)	***None***
RFDs/Pumps (Tag Numbers)	***None***

Design Data

Quality Level		***QL-2***	Fabrication Specs	***24590-HLW-3PS-MBT0-TP001***		
Seismic Category		***SC-III***	Design Code	***ASME AG-1/1a & ASME Section VIII, Div. 1***		
Service/Contents		***Filtered Radioactive Gas***	Code Stamp	***No***		
Design Specific Gravity		***0.588***	NB Registration	***No***		
Maximum Operating Volume	gal	***N/A***	Weights (lbs)	Empty	Operating	Test
Total Volume	gal	***N/A***	Estimated	***14,200***	***35,200***	***35,200***
			Actual *	***39,600***	***55,900***	***55,900***

Inside Diameter	inch	***N/A***			Wind Design	***Not Required***	
Length/Height (TL-TL)	inch	***See note 1***			Snow Design	***Not Required***	
		Vessel Operating	Vessel Design	Coil/Jacket Design	Seismic Design	***24590-WTP-3PS-FB01-T0001 & 24590-HLW-3PS-MBT0-TP001***	
Internal Pressure	psig	***0***	***3***	***N/A***	Seismic Base Moment *	ft*lb	***TBD***
External Pressure	psig	***1.3 (see note 3)***	***3***	***N/A***	Postweld Heat Treat	***Not Required***	
Temperature	°F	***330***	***330***	***N/A***	Corrosion Allowance	Inch	***0.04***
Min. Design Metal Temp.	°F	***59***			Hydrostatic Test Pressure *	psig	***See note 2***
Max Operating Pressure Drop	in-WG	***10***					

Please note that source, special nuclear and byproduct materials, as defined in the Atomic Energy Act of 1954 (AEA), are regulated at the U.S. Department of Energy (DOE) facilities exclusively by DOE acting pursuant to its AEA authority. DOE asserts that pursuant to the AEA, it has sole and exclusive responsibility and authority to regulate source, special nuclear, and byproduct materials at DOE-owned nuclear facilities. Information contained herein on radionuclides is provided for process description purposes only.

MARK W. HOFFMANN
STATE OF WASHINGTON
0030952
REGISTERED
PROFESSIONAL ENGINEER

1/28/04

EXPIRES 12/10/04

ISSUED BY
RPP/WTP PDC
INIT DATE 1/28/04

This bound document contains a total of 3 sheets

REV	DATE	REASON FOR REVISION	PREPARER	CHECKER	REVIEWER	APPROVER
0	1/28/04	Issued for Permitting Use				

BECHTEL	**MECHANICAL SYSTEMS DATA SHEET: VESSEL**	**PLANT ITEM No.** ***24590-HLW-MV-HOP-ABS-00003***

Materials of Construction

Component	Material	Minimum Thickness / Size	Containment
Top Head	***N/A***	***N/A***	***N/A***
Shell	***316L***	***1/4" Plate***	***Primary***
Bottom Head	***N/A***	***N/A***	***N/A***
Support	***316L***	***1/4" 3 x 3 angle***	***N/A***
Jacket/Coils/Half-Pipe Jacket	***N/A***	***N/A***	***N/A***
Internals	***316L***	***1/4" Plate***	***N/A***
Pipe	***316L***	***SCH 40***	***N/A***
Forgings/ Bar stock	***N/A***	***N/A***	***N/A***
Gaskets	***Silicone HT***	***N/A***	***N/A***
Bolting	***Varies - See DWGs***	***N/A***	***N/A***

Miscellaneous Data

Orientation	***Horizontal***	Support Type	****TBD***
Insulation Function	***Personnel protection and process temperature control***	Insulation Material	***Calcium Silicate w/0.024" thk, 304 SST Jacket***
Insulation Thickness (inch)	***6"***	Internal Finish	***N/A***
		External Finish	***N/A***

Remarks

* To be determined by the Vendor.

Equipment Cyclic Data Sheet

Component Plant Item Number:	***24590-HLW-MV-HOP-ABS-00003***
Component Description	***Silver Mordenite Column containment housing***

The information below is provisional and envelopes operational duty for fatigue assessment. It is not to be used as operational data.

Materials of Construction	***316L***
Design Life	***40 yr***
Component Function and Life Cycle Description	***Removal of Iodine-129 and other halogens***

Load Type		Min	Max	Number of Cycles	Comment
Design Pressure (-ve/+ve)	psig	***-3***	***+3***	***1***	***Based on 3 yr melter life***
Operating Pressure (-ve/+ve)	psig	***-1.3***	***+1.5***	***13***	***Based on 3 yr melter life***
Operating Temperature	°F	***59***	***330***	***13***	***Based on 3 yr melter life***
Contents Specific Gravity		***0.588***	***0.588***	***N/A***	
Contents Level	inch	***N/A***	***N/A***	***N/A***	***Gas service, flow through operation***
Localized Features					
Nozzles		***Sampling & Testing Connections***		****TBD***	
Air Inlet		***Flange***			
Delivery		***Flange***			
Supports		****TBD***			

Notes

1. *Maximum outside dimensions: 19'-9 1/4" L (w/o insulation) x 15'-3 1/8" W (w/insulation) x 7'-0" H (bottom of column to top of column grating)*
2. *Pneumatic Test of Housing Pressure Boundary per ASME Section VIII, Div 1. All other testing per ASME AG-1/1a & N509*
3. *Normal operating pressure will be 1.3 psig External. The other pressures shown are design, off-normal conditions.*
4. *Deleted*
5. *Contents of this document are Dangerous Waste Permit affecting*

River Protection Project Waste Treatment Plant	HLW Catalytic Oxidizer/Reducer Mechanical Data Sheet	Data Sheet No. 24590-HLW-MKD-HOP-P0019	Rev. 0
	Sheet 1 of 4	Component No. 24590-HLW-MB-HOP-SCO-00002	

Project	RPP-WTP	System Description	Thermal Catalytic Oxidizer/Selective Catalytic Reduction
Project No.	24590		
System No.	HOP	Reference Doc	Specification 24590-WTP-3PS-MBTV-TP001
Building	HLW		PDS 24590-HLW-MKD-HOP-00011
Quality Level	2	Associated Dwgs	24590-HLW-M5-V17T-P0004
Seismic Criteria	Category III		24590-HLW-M6-HOP-P0008

PROCESS DATA (Buyer)

Offgas Inlet Conditions:

		Normal	Maximum	Design
Vol. Flow	(acfm)	2250	3062	2000 scfm
Temperature	(°F)	330	330	(note 1)
Pressure	(in wg)	-32.4	-50.9	± 80
Allowable Diff Pressure	(in. wg)			10

Primary Offgas Inlet Composition:

		Nominal	Maximum
N_2	(By Volume)	69.9%	65 8%
O_2	(By Volume)	18.7%	17 6%
H_2O	(By Volume)	10.1%	14 9%
CO_2	(By Volume)	0.36%	0 55%
Ar	(By Volume)	0.84%	0 79%
NO_X (note 2)	(lb/hr)	4.4	26
CO	(lb/hr)	0.25	0 50
SO_2	(g/hr)	0 30	0 25
Hg	(g/hr)	4.6E-04	2 4E-02
HCl	(g/hr)	1.4E-05	9.8E-05
HF	(g/hr)	4.4E-04	4 2E-03
I_2	(g/hr)	7.4E-11	5 4E-08
Total of As, Cr, Cu, Fe, Ni, Pb, Sb, Si, Sn, Zn	(g/hr)	1.6E-11	1 1E-10
Organics	(lb/hr)	<0.5	0 to 4

Process Data Notes.

1. Design Temperature for the Thermal Catalytic Oxidizer/Selective Catalytic Reduction internals and vessel shall be determined by the Seller based on the thermodynamic activities in the equipment
2. Minimum NOx concentration ranges to 0 lb/hr.

Ammonia Supply:

		Nominal	Maximum
Temperature	(°F)	77	125
Specific Gravity (vapor)	(lb/lb air SC)	6.00	12 8
Viscosity	(μP)	100	137
Internal Pressure	(psia)	145	314
Solids Content	(wt.%)	0%	0%

Note: Buyer will supply anhydrous ammonia at Seller's specified flowrate to meet design conditions Seller is responsible for flow control of anhydrous ammonia to meet performance requirements. Ammonia vaporizer assure nominial conditions.

Performance Requirements:

1. The destruction removal efficiency (DRE) for volatile organic compounds (VOCs) and semi-volatile compounds (SVOCs) shall be greater than or equal to 95%. The Principal Organic Dangerous Constituents (PODCs) to be used in HLW performance testing are naphthalene (CAS 91-20-3) and 2-propene-1-01 (CAS 107-18-6). A DRE greater than 95% is preferred
2. The NO_x Selective Catalytic Reduction (SCR) unit shall perform with a reduction efficiency of 95%.
3. Dioxin and furan emissions at the outlet of the Thermal Catalytic Oxidizer/Reducers shall meet the MACT criteria of 0.2 ng/m^3 TEQ (Toxic Equivalent).

Note: Please note that source, special nuclear and byproduct materials, as defined in the Atomic Energy Act of 1954 (AEA), are regulated at the U.S. Department of Energy (DOE) facilities exclusively by DOE acting pursuant to its AEA authority. DOE asserts, that pursuant to the AEA, it has sole and exclusive responsibility and authority to regulate source, special nuclear, and byproduct materials at DOE-owned nuclear facilities. Information contained herein on radionuclides is provided for process description purposes only.

MARK W. HOFFMANN STATE OF WASHINGTON 0030952 REGISTERED PROFESSIONAL ENGINEER 9/29/04

EXPIRES 12/10/04

Contents of this document are Dangerous Waste Permit affecting.

This Bound Document Contains a total of 4 sheets

Rev	Reason for revision	By	Check	Review	Approved	Date
0	Issued for Permitting Use					9/29/04

R10395046

ISSUED BY RPP-WTP PDC

HLW Catalytic Oxidizer/Reducer

Sheet 2 of 4	Data Sheet No.	Rev
	24590-HLW-MKD-HOP-P0019	0

MECHANICAL DATA (Buyer)

Construction Data:

Process Equipment Dimensions (L x W x H).

Sections	12 5 x 5 x 6	ft
Overall	25 x 5 x 10	ft
Operating Weight		lbf
Shipping Dimensions (L x W x H)		ft
Shipping Weight		lbf

Ammonia Dilution Equipment (L x W x H):

Skid dimensions with dilution fans	12' x 5' x 6'	ft
Skid dimensions without dilution fans	8' x 5' x 6'	ft
Operating Weight	9000	lbf
Shipping Dimensions (L x W x H)	12' x 5' x 6'	ft
Shipping Weight	8000	lbf

Thermal Analysis Data:

Room Temperature	83 °F	Concrete Slab Base Thickness 6 Ft
Earth Temperature Under Base	70 °F	Thermal Conductivity of Concrete Slab K = 1.8 W / m / K
Maximum Heat Loss	15 Kw	

Thermal Cycling Frequency: For design purposes, use a thermal cycle frequency of once every two (2) months for the life of the plant (40 years).

Process Pipe and Housing Fabrication Data:

Pipe Class	S11V	Housing Material	316 L SS
Pipe Material	316 L SS	Rating	ASME B16.5
Flange Material	316 L SS	Inlet Piping Size	14 inches
Flange Rating	CL 150 RF B16.5	Outlet Piping Size	16 inches
Gasket Material	316 SS Spiral-Wound / B16.20		

Ammonia Piping:

Pipe Class	S30J	Rating	ASME B16.5
Pipe Material	304 L SS	Inlet Piping Size	TBD inches
Flange Material	304 L SS	Valve Material	316/316L SS
Flange Rating	CL 300 RF B16.5	Valve Trim	TRIM 12, API 600
Gasket Material	316 SS Spiral-Wound / Graphite Filled		

Nozzle Loadings (Buyer)

Inlet:

Load Case	Fa (lb)	Fb (lb)	Fc (lb)	Ma (ft-lb)	Mb (ft-lb)	Mc (ft-lb)
Weight	400	-500	400	1000	3000	-1000
Thermal (+)	200	1000	200	2000	2000	2000
Thermal (-)	-4400	-1000	-1000	-7000	-15000	-25000
Seismic (+)	3500	3500	3500	11000	18000	18000
Seismic (-)	-3500	-3500	-3500	-11000	-18000	-18000
Normal (+)	600	500	600	3000	5000	1000
Normal (-)	-4000	-1500	-600	-6000	-12000	-26000
Occasional (+)	4100	4000	4100	14000	23000	19000
Occasional (-)	-7500	-5000	-4100	-17000	-30000	-44000

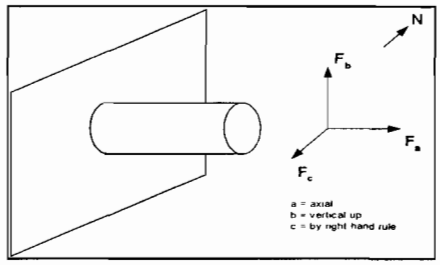

Nozzle movements at °F: Δa =___, Δb =___, and Δc =___ (nominal)
Δa =___, Δb =___, and Δc =___ (design)

Outlet:

Load Case	Fa (lb)	Fb (lb)	Fc (lb)	Ma (ft-lb)	Mb (ft-lb)	Mc (ft-lb)
Weight	-1700	400	400	-200	-500	500
Thermal (+)	2000	1000	2000	100	13000	1000
Thermal (-)	-1300	-2000	-2000	-20000	-2000	-16000
Seismic (+)	4200	6600	6600	9500	75000	75000
Seismic (-)	-4200	-6600	-6600	-9500	-75000	-75000
Normal (+)	300	1400	2400	800	12500	1500
Normal (-)	-3000	-1600	-1600	-20200	-2500	-15500
Occasional (+)	4500	8000	9000	10300	87500	76500
Occasional (-)	-7200	-8200	-8200	-29700	-77500	-90500

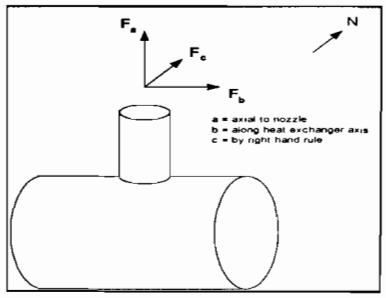

Nozzle movements at °F: Δa =___, Δb =___, and Δc =___ (nominal)
Δa =___, Δb =___, and Δc =___ (design)

Notes:
1. Normal = Weight + Thermal
2. Occasional = Weight + Thermal + Seismic

HLW Catalytic Oxidizer/Reducer

Sheet 3 of 4	Data Sheet No.	Rev
	24590-HLW-MKD-HOP-P0019	0

SYSTEM PERFORMANCE (Seller)

Volatile Organic DRE	95 %	Semi-Volatile Organic DRE	95 %
NO_X Reduction	95 %	Ammonia consumption, max	10 lb/hr
NO_X emissions, max	58 ppm @ 7% O_2	Ammonia entering injection chamber:	Dilution Air:
Ammonia slip, max	20 ppm @ 7% O_2	Pressure	1.0 in-WG; Pressure 1.0 in-WG
Ammonia/NO_X molar injection ratio	0 95	Flow	9.3 lb/hr (max); Flow 200 scfm
Pressure drop through Oxidizer unit	10 in wg	Temperature	100 °F
Minimum service life of catalyst:	VOC 2 yrs (EST)	NO_X 2 yrs (EST.)	
Recommended Catalyst replacement schedule	Test at 1 year to determine activity level. Replacement schedule could be 2-4 year intervals		

COMPONENTS (Seller)

Catalyst:	Organic	NO_X
Manufacturer	Engelhard (VOCAT 360 PFC)	Haldor Topsoe
Number of reactors	9	50
Residence time, sec	0.15	1.20
Arrangement	2 blocks x 4.5	3.5 high x 3 wide
Catalyst vol. per reactor ft^3	7	76 62
Type	Precious metal - platinum	Vanadium/Titanium
Material: base/substrate	ceramic - cordierite	ceramic - honeycomb
Number of layers per reactor	2	5
Thickness of layer, in	4 3	10 0
Spacing between layer, in	0 125	0 125
Space for additional layer, in	8 5	none
Is dummy layer provided	Yes	No
Flow passage, in. x in	0.066" x 0.066"	0.125" x 0.125"
Face velocity thru reactor, fpm	486	292
Max allowable temp, °F	1300	1100
Min. allowable temp, °F	700	550
Module Dimensions, (L x W x D)	12.5" x 12.5" x 8.5"	18" x 18" x 10"
Module weight, lb	40	45
Total weight per reactor, lb	360	2425
Housing:		
Material/Thickness, in	3/8" plate 316L SS	3/8" plate 316L SS
Number of Section	2	1
Weight of Heaviest Section, lb	30,000	20,000
Insulation Lining	Ceramic fiber block	Ceramic fiber block
Material/Thickness, in	7" thick 8 lbs density	7" thick 8 lbs density
Thermal Cond, Btu-in/hr ft^2 °F	40 btu-in/hr ft^2 °F	40 btu-in/hr ft^2 °F
Method of Attachment	Weld stud w/ your attachmt	Weld stud w/ your attachmt
Design pressure, psig	3.5	3 5
Operating pressure, psig	15	15
Design temperature, °F	1300	1300
Ducting		
Material/Thickness, in	3/8" plate 316L SS	3/8" plate 316L SS
Cross Section, ft x ft	3' tall x 2' wide	3' tall x 2' wide
Duct Velocity, fpm	700	700
Electric Heater		
Manufacturer	Watlow	
Type	Round Tubular Elements - Watrod	
Number of Heat Zone	57 heating elements	
Watt Density, W/in^2	12	
Power, kW	155	
Voltage/Current rating	480V / 186.5 amps 1	

HLW Catalytic Oxidizer/Reducer

Sheet 4 of 4	Data Sheet No.	Rev.
	24590-HLW-MKD-HOP-P0019	0

Recuperative Heat Exchanger		
Manufacturer	Exothermic Eclipse	
Type	Plate type	
Material	316L SS	
Ht transfer coefficient, Btu/hr ft^2 °F	5.76	
Heat exchange area, ft^2	2,179	
ΔT (LMTD)	194	
Heat Eexchanger duty, Btu/hr	2,439,000	
Ammonia Injection Manifold		
Type/Arrangement	Spider	
Feed Inlet Dia in	1/2" dia.	
Supply Pressure/Temp (psi/°F)	1 psig @ 100%	
Material/Quantity	316L SS	
No. of nozzle bar per manifold	6 nozzles	
No. of nozzles per bar	6	
Spacing between nozzles, in	3.5"	
Nozzle opening diameter, in	0.5"	
Weight		
Shipping (Heaviest), lb	30,000 lbs	15,000 lbs
Installed, lb	30,000 lbs	15,000 lbs
Shipping dimension (L x W x H), in	12 5' x 5' x 6'	12 5' x 5' x 6'

Notes

NOTES:

1. Deleted
2. Deleted
3. Seller's data is rounded and based on preliminary engineering design.
4. Sub component tag numbers: 24590-HLW-HOP-HX-00001
   24590-HLW-HOP-HTR-00001
   24590-HLW-HOP-SCO-00001
   24590-HLW-HOP-SCR-00001

River Protection Project Waste Treatment Plant	HLW Catalytic Oxidizer/Reducer Mechanical Data Sheet	Data Sheet No. 24590-HLW-MKD-HOP-P0020	Rev. 0
	Sheet 1 of 4	Component No. 24590-HLW-MB-HOP-SCO-00003	

Project	RPP-WTP	System Description	Thermal Catalytic Oxidizer/Selective Catalytic Reduction
Project No.	24590		
System No	HOP	Reference Doc	Specification 24590-WTP-3PS-MBTV-TP001
Building	HLW		PDS 24590-HLW-MKD-HOP-00003
Quality Level	2	Associated Dwgs	24590-HLW-M5-V17T-P20004
Seismic Criteria	Category III		24590-HLW-M6-HOP-P20008

PROCESS DATA (Buyer)

Offgas Inlet Conditions:

		Normal	Maximum	Design
Vol. Flow	(acfm)	2250	3062	2000 scfm
Temperature	(°F)	330	330	(note 1)
Pressure	(in. wg)	-32.4	-50.9	± 80
Allowable Diff. Pressure			(in. wg)	10

Primary Offgas Inlet Composition:

		Nominal	Maximum
N_2	(By Volume)	69.9%	65.8%
O_2	(By Volume)	18 7%	17.6%
H_2O	(By Volume)	10.1%	14.9%
CO_2	(By Volume)	0 36%	0.55%
Ar	(By Volume)	0.84%	0.79%
NO_X (note 2)	(lb/hr)	4 4	26
CO	(lb/hr)	0.25	0 50
SO_2	(g/hr)	0.30	0.25
Hg	(g/hr)	4.6E-04	2.4E-02
HCl	(g/hr)	1.4E-05	9 8E-05
HF	(g/hr)	4 4E-04	4.2E-03
I_2	(g/hr)	7 4E-11	5.4E-08
Total of As, Cr, Cu, Fe, Ni, Pb, Sb, Si, Sn, Zn	(g/hr)	1 6E-11	1.1E-10
Organics	(lb/hr)	<0 5	0 to 4

Process Data Notes

1. Design Temperature for the Thermal Catalytic Oxidizer/Selective Catalytic Reduction internals and vessel shall be determined by the Seller based on the thermodynamic activities in the equipment
2. Minimum NOx concentration ranges to 0 lb/hr.

Ammonia Supply.

			Maximum
Temperature	(°F)	77	125
Specific Gravity (vapor)	(lb/lb air SC)	6.00	12 8
Viscosity	(μP)	100	137
Internal Pressure	(psia)	145	314
Solids Content	(wt.%)	0%	0%

Note. Buyer will supply anhydrous ammonia at Seller's specified flowrate to meet design conditions. Seller is responsible for flow control of anhydrous ammonia to meet performance requirements Ammonia vaporizer assure nominial conditions.

Performance Requirements:

1. The destruction removal efficiency (DRE) for volatile organic compounds (VOCs) and semi-volatile compounds (SVOCs) shall be greater than or equal to 95%. The Principal Organic Dangerous Constituents (PODCs) to be used in HLW performance testing are naphthalene (CAS 91-20-3) and 2-propene-1-01 (CAS 107-18-6) A DRE greater than 95% is preferred.
2. The NO_x Selective Catalytic Reduction (SCR) unit shall perform with a reduction efficiency of 95%.
3. Dioxin and furan emissions at the outlet of the Thermal Catalytic Oxidizer/Reducers shall meet the MACT criteria of 0.2 ng/m^3 TEQ (Toxic Equivalent).

Note: Please note that source, special nuclear and byproduct materials, as defined in the Atomic Energy Act of 1954 (AEA), are regulated at the U.S. Department of Energy (DOE) facilities exclusively by DOE acting pursuant to its AEA authority. DOE asserts, that pursuant to the AEA, it has sole and exclusive responsibility and authority to regulate source, special nuclear, and byproduct materials at DOE-owned nuclear facilities. Information contained herein on radionuclides is provided for process description purposes only.

MARK W. HOFFMANN STATE OF WASHINGTON 0030952 REGISTERED PROFESSIONAL ENGINEER 9/29/04

EXPIRES 12/10/04

Contents of this document are Dangerous Waste Permit affecting

This Bound Document Contains a total of 4 sheets

Rev	Reason for revision	By	Check	Review	Approved	Date
0	Issued for Permitting Use					9/29/04

R10395045

ISSUED BY RPP-WTP PDC

HLW Catalytic Oxidizer/Reducer

Sheet 2 of 4	Data Sheet No	Rev.
	24590-HLW-MKD-HOP-P0020	0

MECHANICAL DATA (Buyer)

Construction Data:

Process Equipment Dimensions (L x W x H):

Sections	12.5 x 5 x 6	ft
Overall	25 x 5 x 10	ft
Operating Weight		lbf
Shipping Dimensions (L x W x H)		ft
Shipping Weight		lbf

Ammonia Dilution Equipment (L x W x H)

Skid dimensions with dilution fans	7 5' x 5' x 4.5'	ft
Skid dimensions without dilution fans	5' x 3' x 4.5'	ft
Operating Weight	2000	lbf
Shipping Dimensions (L x W x H)	7.5' x 5' x 4 5'	ft
Shipping Weight	2000	lbf

Thermal Analysis Data:

Room Temperature	83 °F	Concrete Slab Base Thickness	6 Ft
Earth Temperature Under Base	70 °F	Thermal Conductivity of Concrete Slab	K = 1 8 W / m / K
Maximum Heat Loss	15 Kw		

Thermal Cycling Frequency: For design purposes, use a thermal cycle frequency of once every two (2) months for the life of the plant (40 years).

Process Pipe and Housing Fabrication Data:

Pipe Class	S11V	Housing Material	316 L SS
Pipe Material	316 L SS	Rating	ASME B16.5
Flange Material	316 L SS	Inlet Piping Size	14 inches
Flange Rating	CL 150 RF B16.5	Outlet Piping Size	16 inches
Gasket Material	316 SS Spiral-Wound / B16.20		

Ammonia Piping:

Pipe Class	S30J	Rating	ASME B16.5
Pipe Material	304 L SS	Inlet Piping Size	TBD inches
Flange Material	304 L SS	Valve Material	316/316 L SS
Flange Rating	CL 300 RF B16.5	Valve Trim	TRIM 12, API 600
Gasket Material	316 SS Spiral-Wound / Graphite Filled		

Nozzle Loadings (Buyer)

Inlet:

Load Case	Fa (lb)	Fb (lb)	Fc (lb)	Ma (ft-lb)	Mb (ft-lb)	Mc (ft-lb)
Weight	400	-500	400	1000	3000	-1000
Thermal (+)	200	1000	200	2000	2000	2000
Thermal (-)	-4400	-1000	-1000	-7000	-15000	-25000
Seismic (+)	3500	3500	3500	11000	18000	18000
Seismic (-)	-3500	-3500	-3500	-11000	-18000	-18000
Normal (+)	600	500	600	3000	5000	1000
Normal (-)	-4000	-1500	-600	-6000	-12000	-26000
Occasional (+)	4100	4000	4100	14000	23000	19000
Occasional (-)	-7500	-5000	-4100	-17000	-30000	-44000

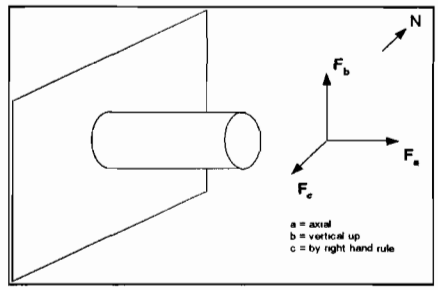

Nozzle movements at °F: Δa =___, Δb =___, and Δc =___ (nominal)
Δa =___, Δb =___, and Δc =___ (design)

Outlet:

Load Case	Fa (lb)	Fb (lb)	Fc (lb)	Ma (ft-lb)	Mb (ft-lb)	Mc (ft-lb)
Weight	-1700	400	400	-200	-500	500
Thermal (+)	2000	1000	2000	100	13000	1000
Thermal (-)	-1300	-2000	-2000	-20000	-2000	-16000
Seismic (+)	4200	6600	6600	9500	75000	75000
Seismic (-)	-4200	-6600	-6600	-9500	-75000	-75000
Normal (+)	300	1400	2400	800	12500	1500
Normal (-)	-3000	-1600	-1600	-20200	-2500	-15500
Occasional (+)	4500	8000	9000	10300	87500	76500
Occasional (-)	-7200	-8200	-8200	-29700	-77500	-90500

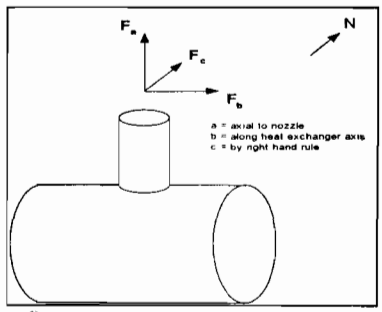

Nozzle movements at °F: Δa =___, Δb =___, and Δc =___ (nominal)
Δa =___, Δb =___, and Δc =___ (design)

Notes: 1 Normal = Weight + Thermal
2 Occasional = Weight + Thermal + Seismic

HLW Catalytic Oxidizer/Reducer

Sheet 3 of 4	Data Sheet No.	Rev.
	24590-HLW-MKD-HOP-P0020	0

SYSTEM PERFORMANCE (Seller)

Volatile Organic DRE	95 %	Semi-Volatile Organic DRE	95 %
NO_X Reduction	95 %	Ammonia consumption, max	10 lb/hr
NO_X emissions, max	58 ppm @ 7% O_2	Ammonia entering injection chamber	Dilution Air:
Ammonia slip, max	20 ppm @ 7% O_2	Pressure 1.0 in-WG	Pressure 1.0 in-WG
Ammonia/NO_X molar injection ratio	0 95	Flow 9.3 lb/hr (max)	Flow 200 scfm
Pressure drop through Oxidizer unit	10 in wg	Temperature 100 °F	
Minimum service life of catalyst:	VOC 2 yrs (EST.)	NO_X 2 yrs (EST)	

Recommended Catalyst replacement schedule: Test at 1 year to determine activity level. Replacement schedule could be 2-4 year intervals. (1)

COMPONENTS (Seller)

Catalyst	Organic	NO_X
Manufacturer	Engelhard (VOCAT 360 PFC)	Haldor Topsoe
Number of reactors	9	50
Residence time, sec	0.15	1.20
Arrangement	2 blocks x 4.5	3.5 high x 3 wide
Catalyst vol. per reactor ft^3	7	76.62
Type	Precious metal - platinum	Vanadium/Titanium
Material base/substrate	ceramic - cordierite	ceramic - honeycomb
Number of layers per reactor	2	5
Thickness of layer, in	4.3	10.0
Spacing between layer, in	0.125	0.125
Space for additional layer, in	8.5	none
Is dummy layer provided	Yes	No
Flow passage, in x in.	0 066" x 0.066"	0.125" x 0.125"
Face velocity thru reactor, fpm	486	292
Max allowable temp, °F	1300	1100
Min allowable temp, °F	700	550
Module Dimensions, (L x W x D)	12.5" x 12.5" x 8.5"	18" x 18" x 10"
Module weight, lb	40	45
Total weight per reactor, lb	360	2425
Housing.		
Material/Thickness, in	3/8" plate 316L SS	3/8" plate 316L SS
Number of Section	2	1
Weight of Heaviest Section, lb	30,000	20,000
Insulation Lining	Ceramic fiber block	Ceramic fiber block
Material/Thickness, in	7" thick 8 lbs density	7" thick 8 lbs density
Thermal Cond, Btu-in/hr ft^2 °F	40 btu-in/hr ft^2 °F	40 btu-in/hr ft^2 °F
Method of Attachment	Weld stud w/ your attachmt	Weld stud w/ your attachmt
Design pressure, psig	3.5	3.5
Operating pressure, psig	15	15
Design temperature, °F	1300	1300
Ducting		
Material/Thickness, in	3/8" plate 316L SS	3/8" plate 316L SS
Cross Section, ft x ft	3' tall x 2' wide	3' tall x 2' wide
Duct Velocity, fpm	700	700
Electric Heater		
Manufacturer	Watlow	
Type	Round Tubular Elements - Watrod	
Number of Heat Zone	57 heating elements	
Watt Density, W/in^2	12	
Power, kW	155	
Voltage/Current rating	480V / 186.5 amps	

HLW Catalytic Oxidizer/Reducer

Sheet 4 of 4	Data Sheet No	Rev.
	24590-HLW-MKD-HOP-P0020	0

Recuperative Heat Exchanger		
Manufacturer	Exothermic Eclipse	
Type	Plate type	
Material	316L SS	
Ht transfer coefficient, Btu/hr ft^2 °F	5.76	
Heat exchange area, ft^2	2,179	
ΔT (LMTD)	194	
Heat Eexchanger duty, Btu/hr	2,439,000	
Ammonia Injection Manifold		
Type/Arrangement	Spider	
Feed Inlet Dia. in	1/2" dia.	
Supply Pressure/Temp (psi/°F)	1 psig @ 100%	
Material/Quantity	316L SS	
No of nozzle bar per manifold	6 nozzles	
No of nozzles per bar	6	
Spacing between nozzles, in	3.5"	
Nozzle opening diameter, in	0.5"	
Weight		
Shipping (Heaviest), lb	30,000 lbs	15,000 lbs
Installed, lb	30,000 lbs	15,000 lbs
Shipping dimension (L x W x H), in	12.5' x 5' x 6'	12 5' x 5' x 6'

Notes

NOTES

1 Deleted

2 Deleted

3 Seller's data is rounded and based on preliminary engineering design.

4 Sub component tag numbers: 24590-HLW-HOP-HX-00003
24590-HLW-HOP-HTR-00007
24590-HLW-HOP-SCO-00004
24590-HLW-HOP-SCR-00002

DWG No. 24590-HLW-MK-HOP-P0001001

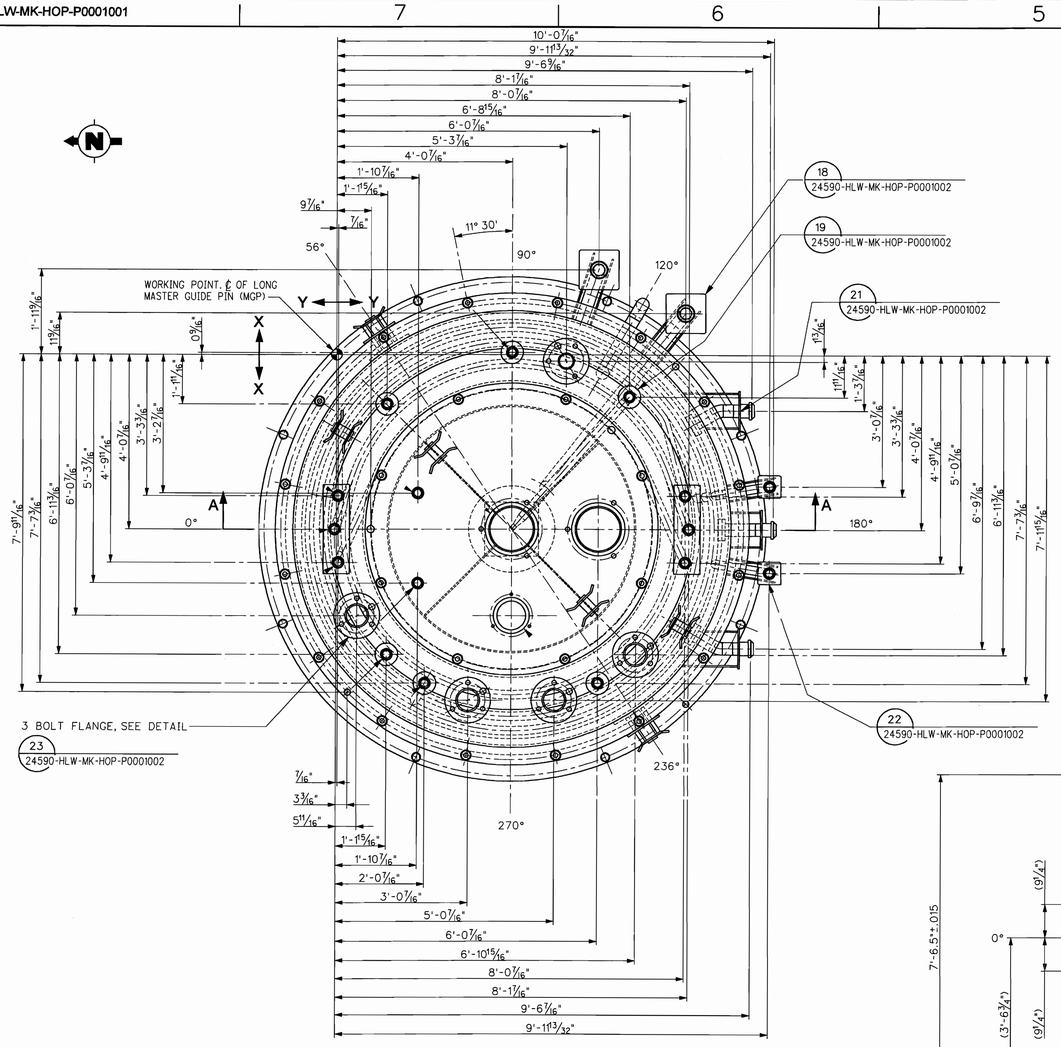

PLAN

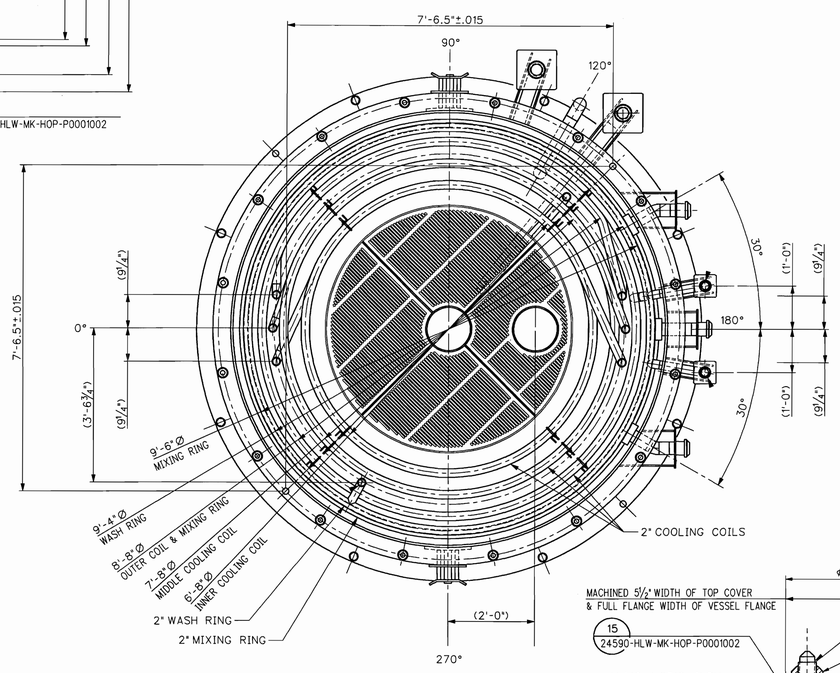

SECTION B-B

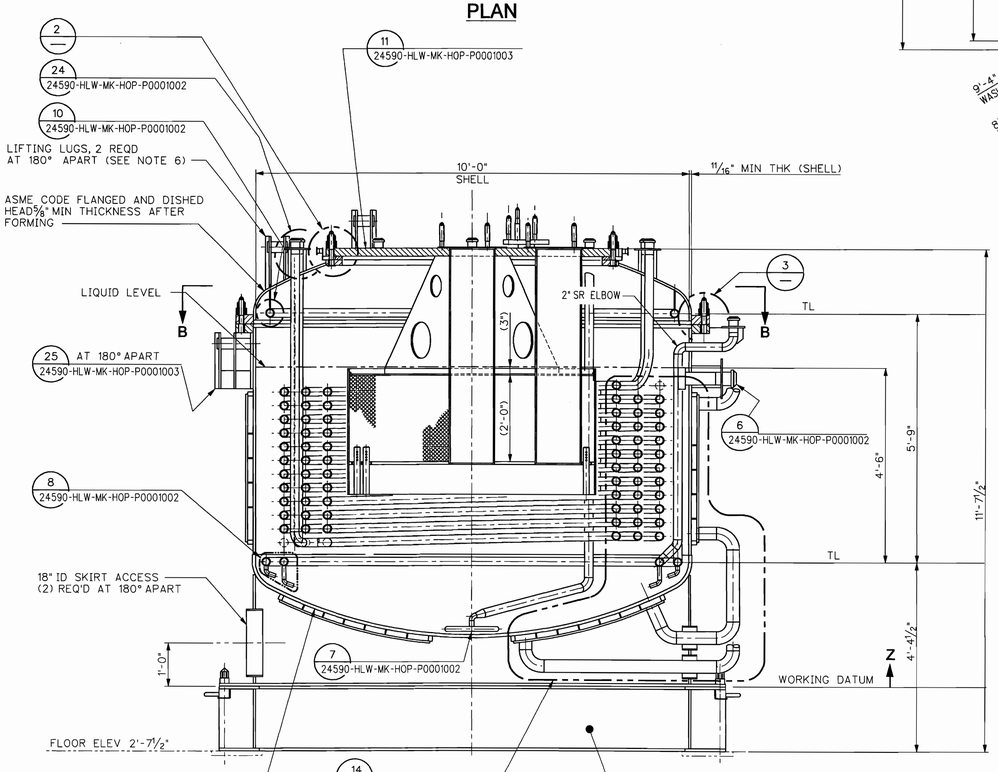

SECTION A-A

TRUE NOZZLE ORIENTATION SHOWN ON PLAN VIEW

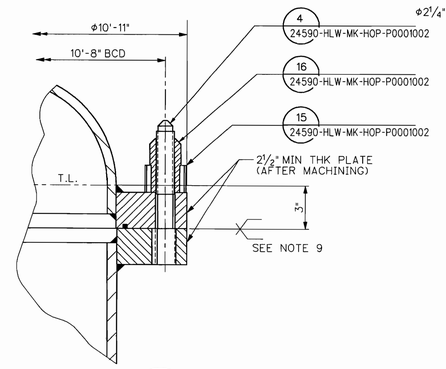

DETAIL 3 — SCALE: 3"=1'-0"

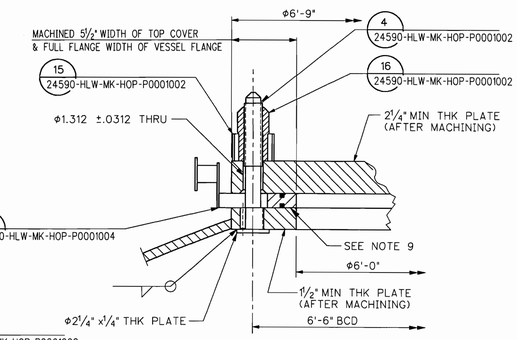

DETAIL 2 — SCALE: 3"=1'-0"

GENERAL NOTES :

1. ALL INTERNAL AND EXTERNAL CREVICES NOT COVERED BY STRUCTURAL WELDS SHALL RECEIVE A SEAL PASS WELD TO FACILITATE CLEANING AND DECONTAMINATION OF VESSEL. A CREVICE IS DEFINED AS AN OPENING OR PARTIALLY ENCLOSED SPACE WHICH COULD CONTAIN PROCESS LIQUID OR VAPOR BY CAPILLARY ACTION AND WILL USUALLY HAVE A DEPTH GREATER THAN ITS SMALLEST SURFACE DIMENSION.
2. NOZZLES AND GUIDE PINS LOCATIONS TOLERANCES SHALL BE ±1/32" FOR X AND Y COORDINATES AND ±1/16" FOR Z COORDINATES.
3. LOCATE LIFT LUGS SO THE BED WILL HANG LEVEL WITHIN 1/4" WHEN MEASURED ACROSS THE TOP FLAT COVER.
4. LOCATE LIFT LUGS SUCH THAT THE TOP HEAD ASSY. REMAIN LEVEL WHEN SUSPENDED AS MEASURED ACROSS THE LARGEST DIAMETER WITHIN 1/2".
5. THE INTERNAL COOLING COILS SHALL BE SUPPORTED FROM THE TOP HEAD, TO FACILITATE REPLACEMENT SHOULD THE COILS FAIL.
6. BED PACKING MEDIA FROM "NORTON CHEMICAL PROCESS PRODUCTS CORPORATION", DENSTONE 99 SPHERES 1" DIAMETER, MINIMUM PARTICLE DENSITY OF 115 LBS/CU-FT.
7. DELETED
8. PUREX NOZZLES WILL BE PROVIDED TO VESSEL VENDOR. THE INSTALLATION OF THE PUREX NOZZLES TO THE PIPE NOZZLES AND KICK PLATES ARE INCLUDED IN VENDOR'S SCOPE OF WORK.
9. MATERIAL SURFACE FINISH FOR ALL SEALS BE IN ACCORDANCE WITH THE SEAL MANUFACTURERS INSTRUCTION.
10. DELETED
11. SELLER SHALL PROPOSE ANCHOR BOLT DIAMETER, NUMBER, AND BOLT CIRCLE DIAMETER WITH A MINIMUM OF 8-1" ASTM F1554 GRADE 36 BOLTS, SUPPLIED BY BECHTEL.
12. DELETED
13. DELETED
14. NUT CUPS LOCATED AT EACH END OF FLATTENED SIDE OF THE MOUNTING BASE ARE TO BE ROTATED TO ALLOW 1/4" CLEARANCE BETWEEN THE WALL OF THE NUT CUP AND GUSSET.

HOLDS:

1. NAMEPLATE LOCATION TO BE PROVIDED UPON REVIEW OF SELLER'S GENERAL ARRANGEMENT DRAWING.
2. DELETED

PLEASE NOTE THAT SOURCE, SPECIAL NUCLEAR AND BYPRODUCT MATERIALS, AS DEFINED IN THE ATOMIC ENERGY ACT OF 1954 (AEA), ARE REGULATED AT THE U.S. DEPARTMENT OF ENERGY (DOE) FACILITIES EXCLUSIVELY BY DOE ACTING PURSUANT TO ITS AEA AUTHORITY. DOE ASSERTS, THAT PURSUANT TO THE AEA, IT HAS SOLE AND EXCLUSIVE RESPONSIBILITY AND AUTHORITY TO REGULATE SOURCE, SPECIAL NUCLEAR, AND BYPRODUCT MATERIAL AT DOE-OWNED NUCLEAR FACILITIES. INFORMATION CONTAINED HEREIN ON RADIONUCLIDES IS PROVIDED FOR PROCESS DESCRIPTION PURPOSES ONLY.

THIS DRAWING TO BE READ IN CONJUNCTION WITH THE MECHANICAL DATA SHEET NO 24590-HLW-MKD-HOP-P0016

VESSEL COMPONENT QUALITY LEVELS	
COMPONENTS	QUALITY LEVELS
MAIN VESSEL, SKIRT, ALL NOZZLES & EXTERNAL JACKET	QL-2
ALL INTERNAL PIPING & SUPPORTS	QL-2
CERAMIC BEAD PACKING	CM

DRAWING INDEX		
DWG NO	REV	TITLE
24590-HLW-MK-HOP-P0001001	0	HLW SUBMERGED BED SCB HOP-SCB-00001/00002 (SH 1)
24590-HLW-MK-HOP-P0001002	0	HLW SUBMERGED BED SCB HOP-SCB-00001/00002 (SH 2)
24590-HLW-MK-HOP-P0001003	0	HLW SUBMERGED BED SCB HOP-SCB-00001/00002 (SH 3)
24590-HLW-MK-HOP-P0001004	0	HLW SUBMERGED BED SCB HOP-SCB-00001/00002 (SH 4)

REFERENCE DRAWINGS		
DWG NO	REV	TITLE
24590-HLW-M6-HOP-P0001	0	P&ID PRIMARY OFFGAS PROCESS SYSTEM MELTER 1
24590-WTP-MV-M59T-00001	1	PRESSURE VESSEL TOLERANCES STANDARD DETAILS
24590-WTP-MV-M59T-00018	1	VESSEL NAMEPLATE STANDARD DETAILS
24590-WTP-M61-P23T-00005	1	NOZZLES PUREX MALE CONNECTOR 1", 2", 3" & 4"

MARK W. HOFFMANN — STATE OF WASHINGTON — REGISTERED PROFESSIONAL ENGINEER — 24590 — 4/21/04 — EXPIRES 10/18/04

REV	DESCRIPTION	ORG	CHKD	RVWD	APVD	DATE
0	ISSUED FOR PERMITTING USE					4/21/04

REVISION HISTORY

ISSUED BY RPP-WTP/DOE 4/20/04 INTERIM CHANGE

PROJECT No.	24590	
SITE	HANFORD	
AREA	200E	
BUILDING No.	30	

	BY	DATE
ORIGINATOR		4/19/04
CHECKER		4/20/04
APPROVER		4/21/04
REVIEWER		4/20/04

CONTENT APPLICABLE TO ALARA? [XX] YES [ ] NO
ADR NO. N/A REV:

RIVER PROTECTION PROJECT
WASTE TREATMENT PLANT
2435 STEVENS CENTER PLACE
RICHLAND, WA 99352

CONTRACT No: DE-AC27-01RV14136

EQUIPMENT ASSEMBLY
HLW SUBMERGED BED SCRUBBER
HOP-SCB-00001 (Q)
HOP-SCB-00002 (Q)
SHEET 1 OF 4

SCALE: AS SHOWN

24590-HLW-MK-HOP-P0001001 REV 0

R13036119

FORM E_SDN.DGN 02/2003 'E' SIZE - 44x34 COMPUTER GENERATED - MANUAL 04/19/2004 08:18:24 AM

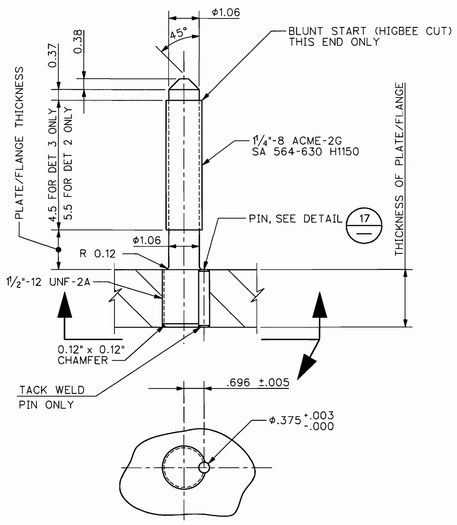

DETAIL 4
SCALE: 6 "=1'-0"
24590-HLW-MK-HOP-P0001001 & 1003
MATERIAL: SA 564-630 H1150

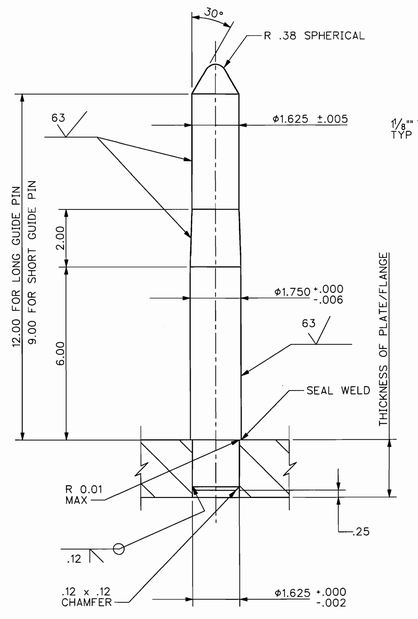

DETAIL 5
SCALE: 6 "=1'-0"
24590-HLW-MK-HOP-P0001001
MATERIAL: SA-582-416

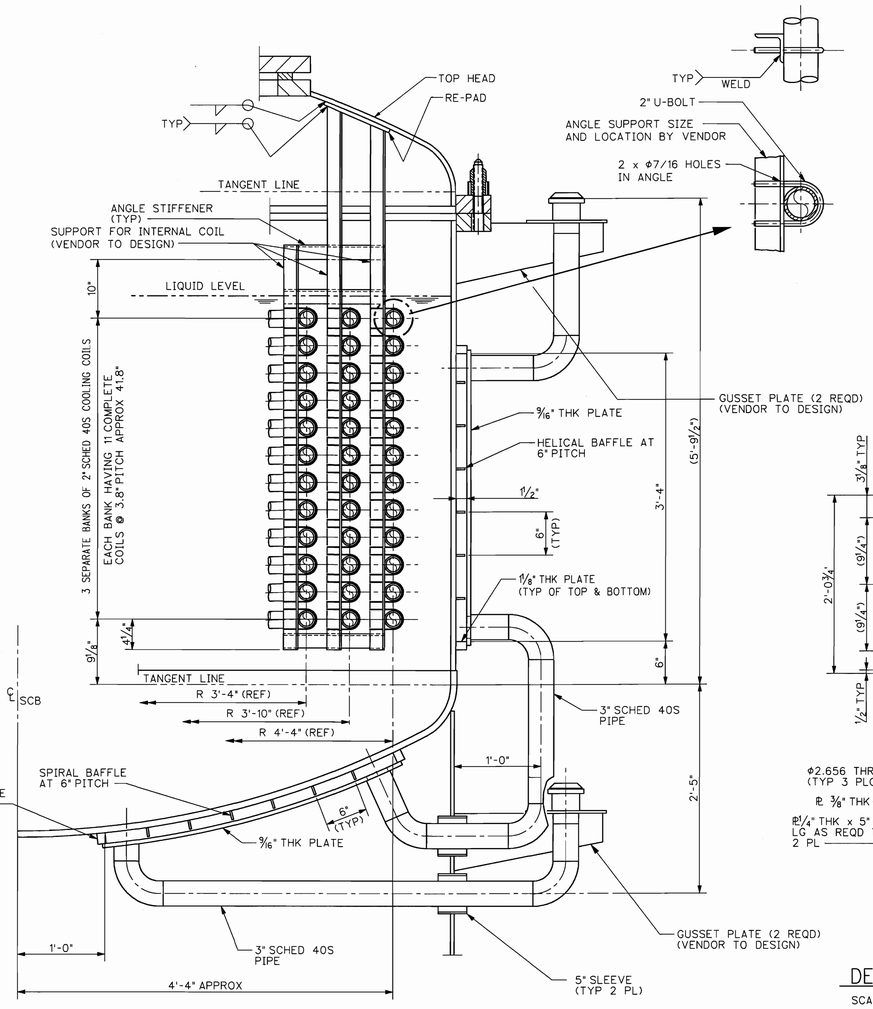

DETAIL 14
SCALE: 1½"=1'-0"
24590-HLW-MK-HOP-P0001001

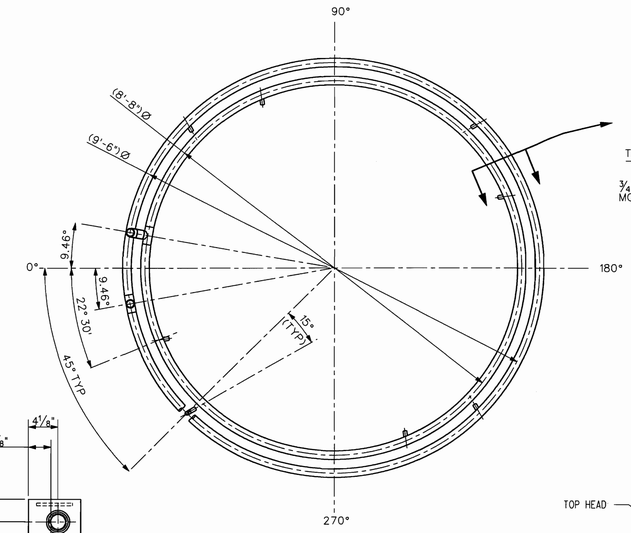

DETAIL 8
SCALE: ¾"=1'-0"
24590-HLW-MK-HOP-P0001001

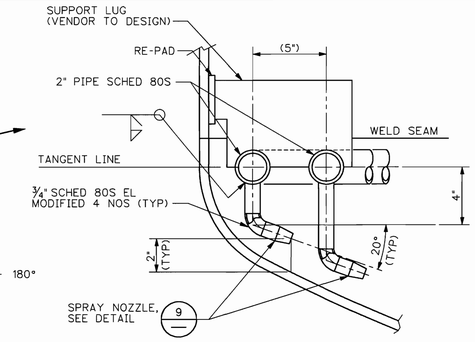

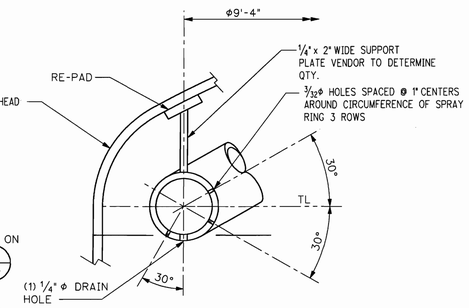

DETAIL 10
SCALE: 6"=1'-0"
24590-HLW-MK-HOP-P0001001

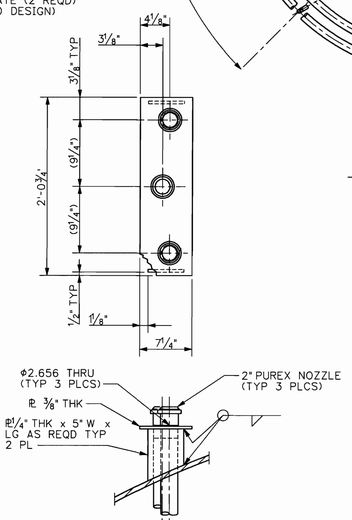

DETAIL 24
SCALE: 1½"=1'-0"
24590-HLW-MK-HOP-P0001001

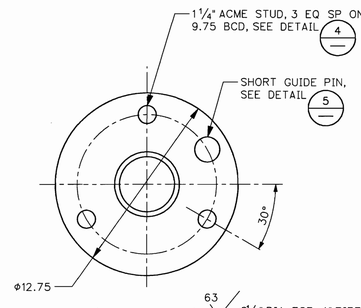

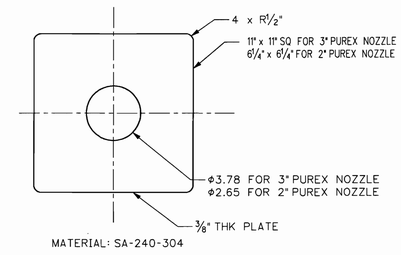

MATERIAL: SA-240-304

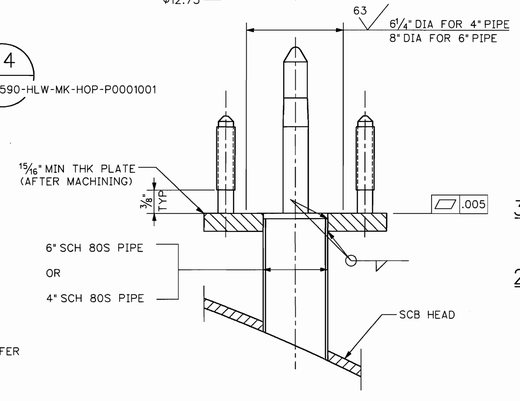

3 BOLT FLANGE

DETAIL 23
SCALE: NTS
24590-HLW-MK-HOP-P0001001

3" PUREX KICKPLATE 21
SCALE: 3 "=1'-0"
24590-HLW-MK-HOP-P0001001

2" PUREX KICKPLATE 22
SCALE: 3 "=1'-0"
24590-HLW-MK-HOP-P0001001

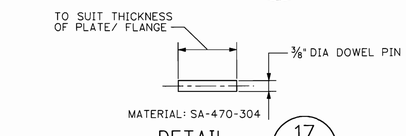

MATERIAL: SA-470-304

DETAIL 17
SCALE: 6 "=1'-0"

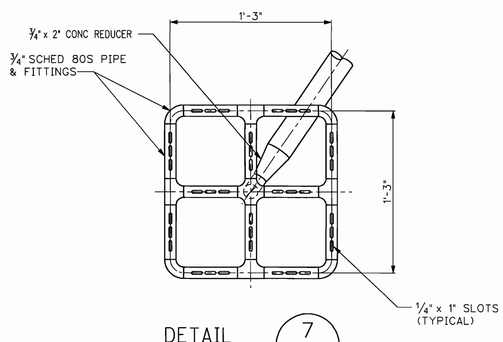

DETAIL 7
BOTTOM VIEW
SCALE: NONE
24590-HLW-MK-HOP-P0001001

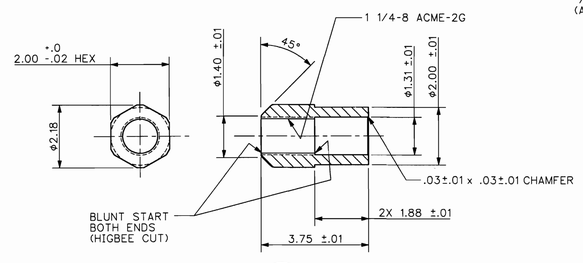

DETAIL 16
SCALE: 6 "=1'-0"
24590-HLW-MK-HOP-P0001001
MATERIAL: ASME SA-194 GRADE 8S

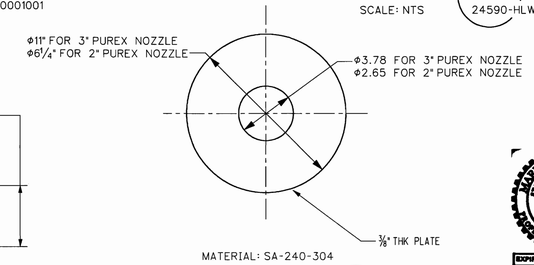

MATERIAL: SA-240-304

3" PUREX KICKPLATE 18
SCALE: 3 "=1'-0"
24590-HLW-MK-HOP-P0001001

2" PUREX KICKPLATE 19
SCALE: 3 "=1'-0"
24590-HLW-MK-HOP-P0001001

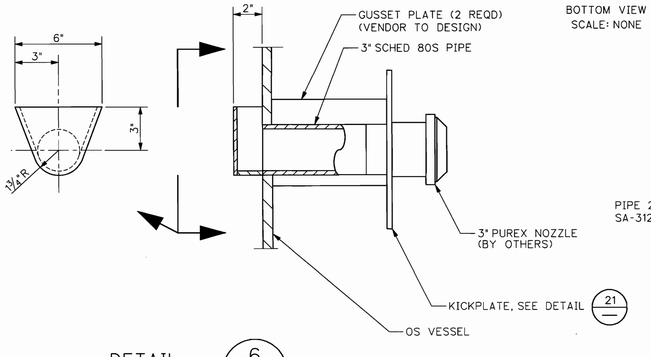

DETAIL 6
SCALE: 3"=1'-0"
24590-HLW-MK-HOP-P0001001

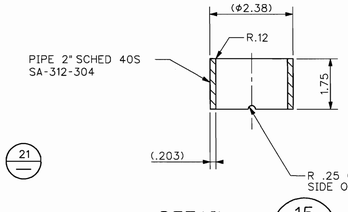

DETAIL 15
SCALE: 6 "=1'-0"
24590-HLW-MK-HOP-P0001001, 1003 & 1004

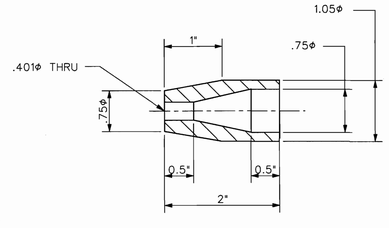

DETAIL 9
SCALE: NONE

PLEASE NOTE THAT SOURCE, SPECIAL NUCLEAR AND BYPRODUCT MATERIALS, AS DEFINED IN THE ATOMIC ENERGY ACT OF 1954 (AEA), ARE REGULATED AT THE U.S. DEPARTMENT OF ENERGY (DOE) FACILITIES EXCLUSIVELY BY DOE ACTING PURSUANT TO ITS AEA AUTHORITY. DOE ASSERTS, THAT PURSUANT TO THE AEA, IT HAS SOLE AND EXCLUSIVE RESPONSIBILITY AND AUTHORITY TO REGULATE SOURCE, SPECIAL NUCLEAR, AND BYPRODUCT MATERIAL AT DOE-OWNED NUCLEAR FACILITIES. INFORMATION CONTAINED HEREIN ON RADIONUCLIDES IS PROVIDED FOR PROCESS DESCRIPTION PURPOSES ONLY.

MARK W. HOPPANDE — STATE OF WASHINGTON — 24592 — REGISTERED PROFESSIONAL ENGINEER — 4/22/04 — EXPIRES 12/16/04

REV	DESCRIPTION	ORG	CHKD	RVWD	APVD	DATE
0	ISSUED FOR PERMITTING USE					4/22/04

REVISION HISTORY

ISSUED BY RPP-WTP PDC — INIT DATE — ISSUE STAMP

PROJECT No.	24590	
SITE	HANFORD	
AREA	200E	
BUILDING No.	30	

	BY	DATE
ORIGINATOR		4/22/04
CHECKER		04/22/04
APPROVER		4/22/04
REVIEWER		4/20/04

CONTENT APPLICABLE TO ALARA? [XX] YES [ ] NO
ADR NO. N/A REV:

BECHTEL
RIVER PROTECTION PROJECT
WASTE TREATMENT PLANT
2435 STEVENS CENTER PLACE
RICHLAND, WA 99352

CONTRACT No: DE-AC27-01RV14136

EQUIPMENT ASSEMBLY
HLW SUBMERGED BED SCRUBBER
HOP-SCB-00001 (Q)
HOP-SCB-00002 (Q)
SHEET 2 OF 4

SCALE: AS SHOWN
24590-HLW-MK-HOP-P0001002
REV 0

FORM E_SDN.DGN 02/2003
'E' SIZE - 44x34
COMPUTER GENERATED - MANUAL CHANGES NOT PERMITTED
04/22/2004 07:47:50 AM
PLOTTED BY: jrwill3
C:\Work\dms05070\HLW\MKHOP\P0001002.dgn

DWG No. 24590-HLW-MK-HOP-P0001003

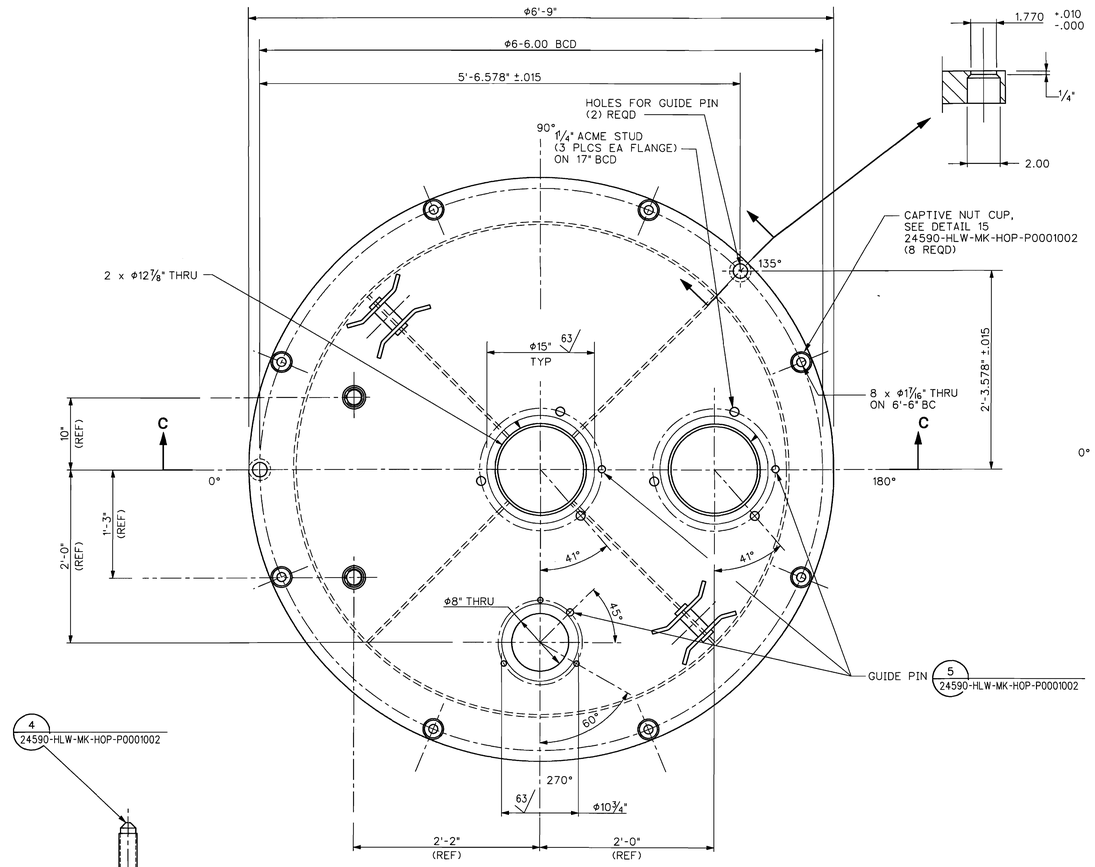

PLAN

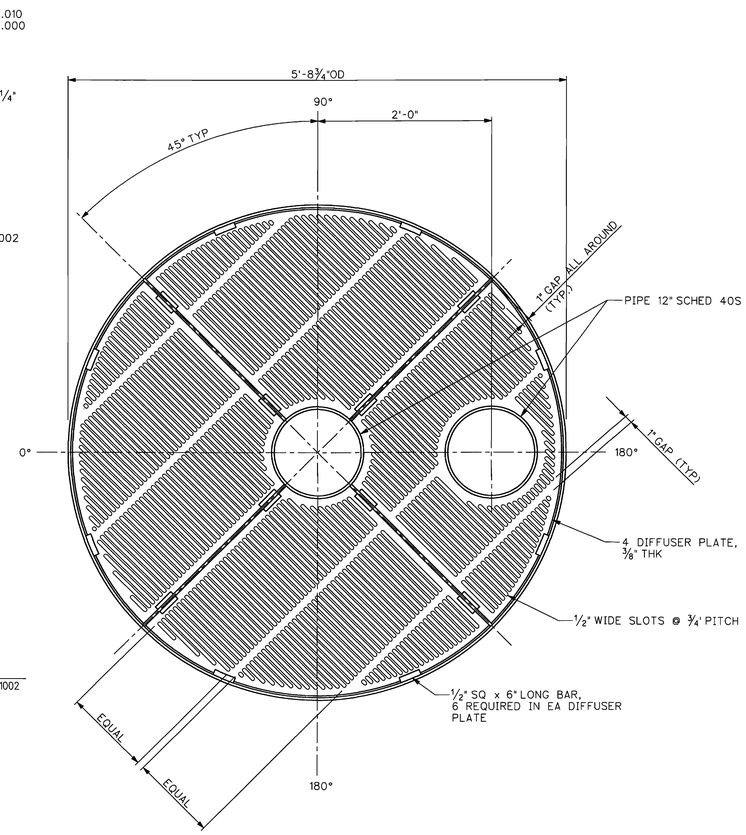

SECTION D-D

SCALE: 1½"=1'-0"

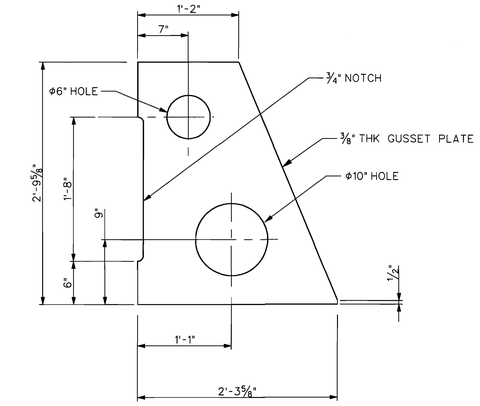

DETAIL 12

SCALE: 1½"=1'-0"

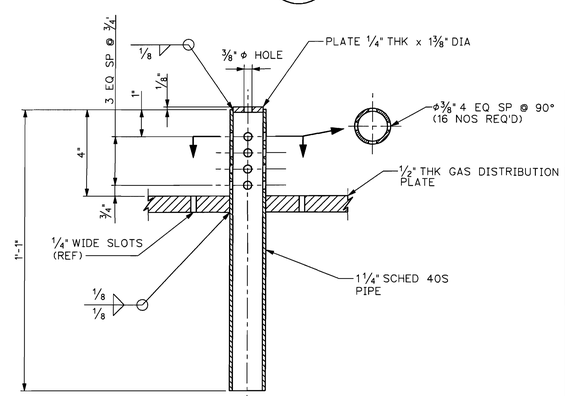

DETAIL 13

SCALE: NONE

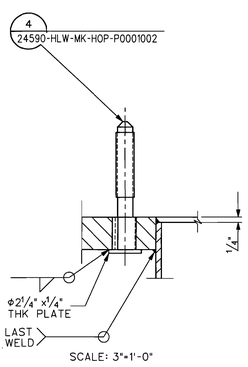

SCALE: 3"=1'-0"

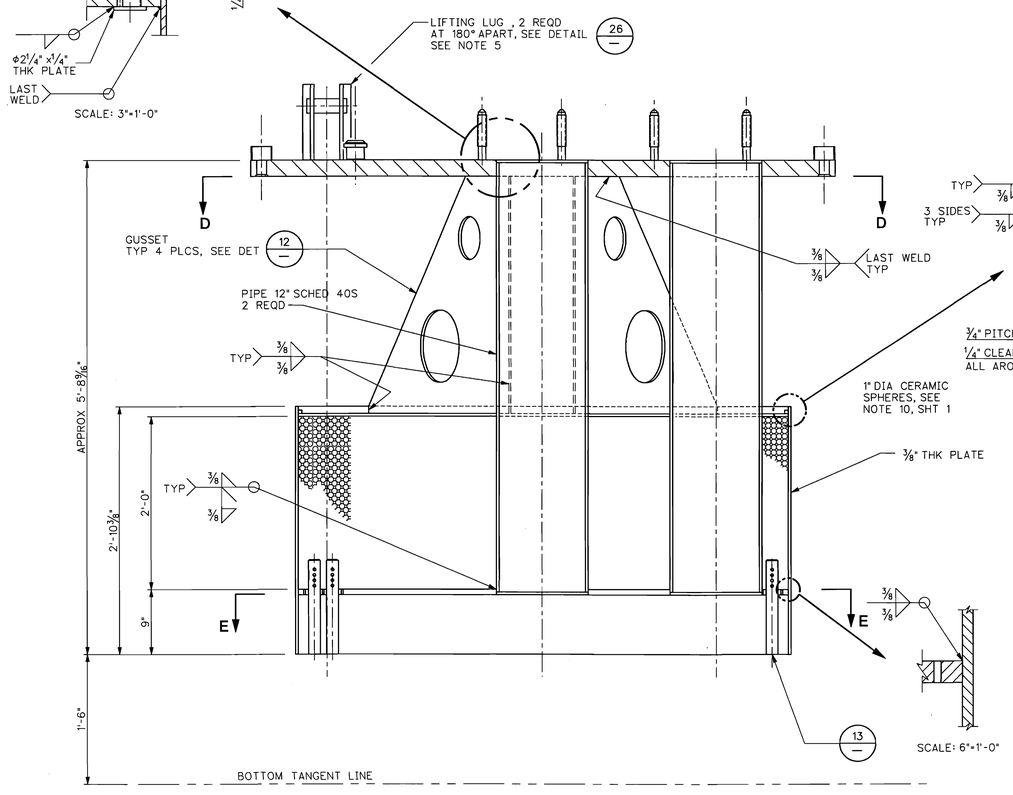

SECTION C-C

DETAIL 11

SCALE: 1½"=1'-0"

24590-HLW-MK-HOP-P0001001

TRUE NOZZLE ORIENTATION SHOWN ON PLAN VIEW

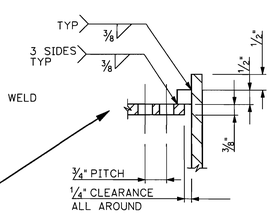

SCALE: 6"=1'-0"

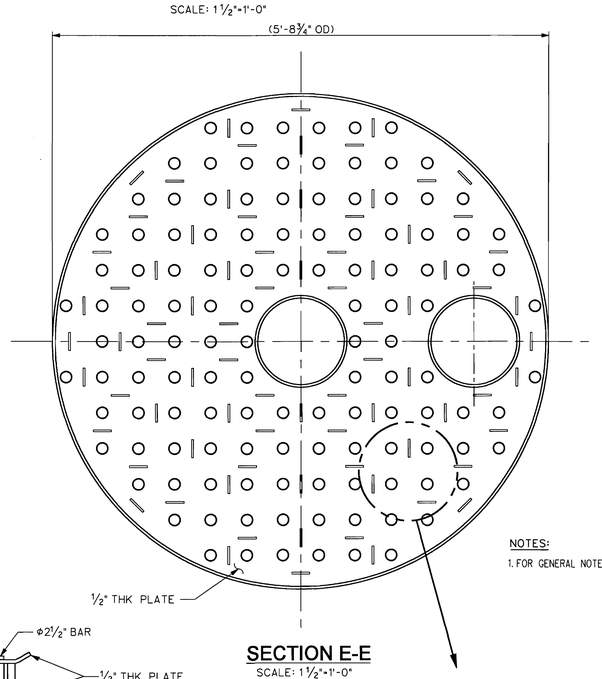

SECTION E-E

SCALE: 1½"=1'-0"

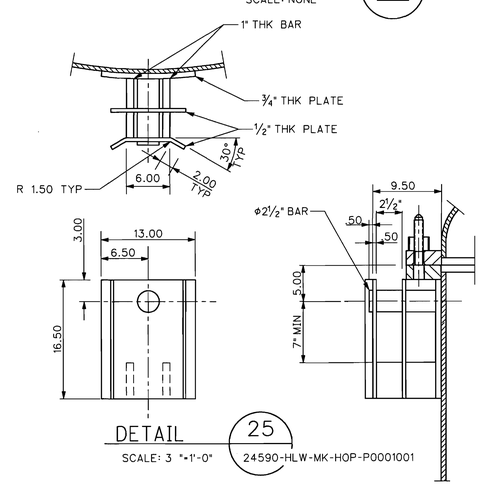

DETAIL 25

SCALE: 3 "=1'-0"

24590-HLW-MK-HOP-P0001001

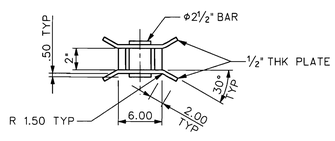

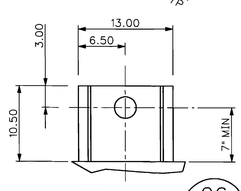

DETAIL 26

SCALE: 3"=1'-0"

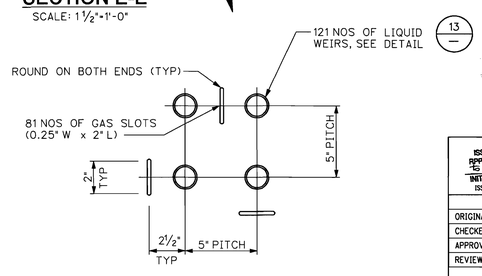

NOTES:

1. FOR GENERAL NOTES, SEE 24590-HLW-MK-HOP-P0001001.

PLEASE NOTE THAT SOURCE, SPECIAL NUCLEAR AND BYPRODUCT MATERIALS, AS DEFINED IN THE ATOMIC ENERGY ACT OF 1954 (AEA), ARE REGULATED AT THE U.S. DEPARTMENT OF ENERGY (DOE) FACILITIES EXCLUSIVELY BY DOE ACTING PURSUANT TO ITS AEA AUTHORITY. DOE ASSERTS, THAT PURSUANT TO THE AEA, IT HAS SOLE AND EXCLUSIVE RESPONSIBILITY AND AUTHORITY TO REGULATE SOURCE, SPECIAL NUCLEAR, AND BYPRODUCT MATERIAL AT DOE-OWNED NUCLEAR FACILITIES. INFORMATION CONTAINED HEREIN ON RADIONUCLIDES IS PROVIDED FOR PROCESS DESCRIPTION PURPOSES ONLY.

MARK W. HOUGHAM, STATE OF WASHINGTON, REGISTERED PROFESSIONAL ENGINEER — 4/21/04 — EXPIRES 12/16/04

REV	DESCRIPTION	ORG	CHKD	RVWD	APVD	DATE
0	ISSUED FOR PERMITTING USE					4/21/04

REVISION HISTORY

ISSUED BY RPP-WTP PDC — INIT — DATE — ISSUE STAMP

PROJECT No.	24590
SITE	HANFORD
AREA	200E
BUILDING No.	30

	BY	DATE
ORIGINATOR		4/8/04
CHECKER		04/20/04
APPROVER		4/21/04
REVIEWER		4/26/04

CONTENT APPLICABLE TO ALARA? [XX] YES [ ] NO

ADR NO. N/A REV:

BECHTEL

RIVER PROTECTION PROJECT
WASTE TREATMENT PLANT
2435 STEVENS CENTER PLACE
RICHLAND, WA 99352

CONTRACT No: DE-AC27-01RV14136

EQUIPMENT ASSEMBLY HLW SUBMERGED BED SCRUBBER HOP-SCB-00001 (Q) HOP-SCB-00002 (Q) SHEET 3 OF 4

SCALE: AS SHOWN

24590-HLW-MK-HOP-P0001003

REV 0

"E" SIZE - 44x34 COMPUTER GENERATED - MANUAL CHANGES NOT PERMITTED

04/19/2004 08:18:31 AM

\\Work\dms05070\HLWMKHOP0001003.dgn

FORM E_SDN.DGN 02/2003

DWG No. 24590-HLW-MK-HOP-P0001004

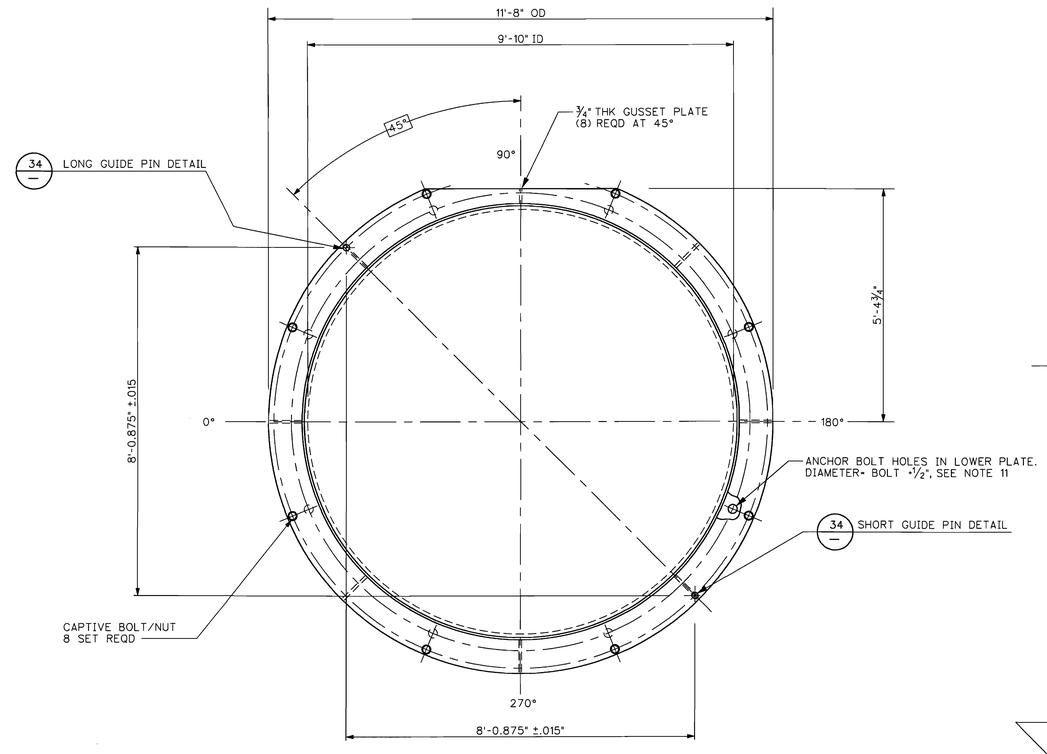

PLAN

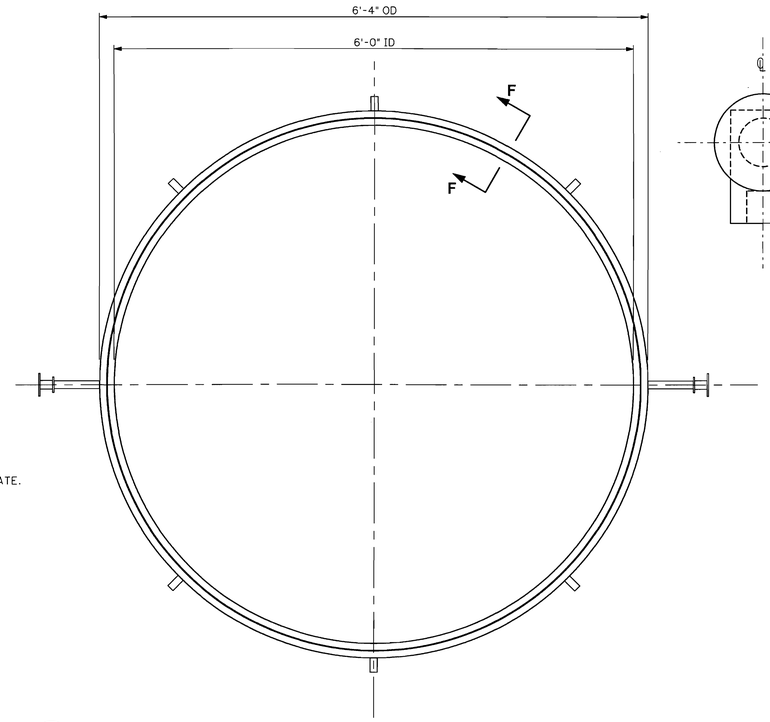

PLAN

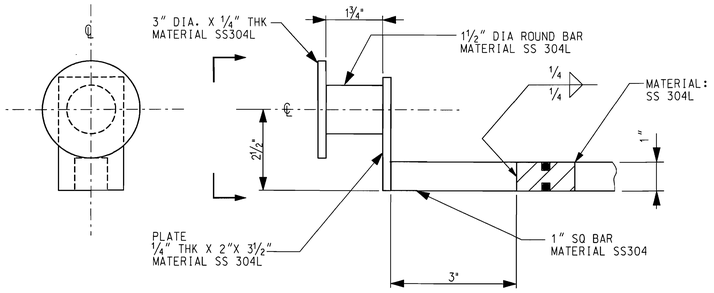

DETAIL 35
SCALE: 3"=1'-0"

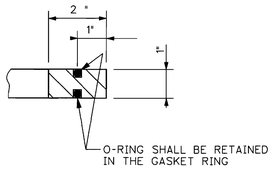

SECTION F-F
SCALE: 6"=1'-0"

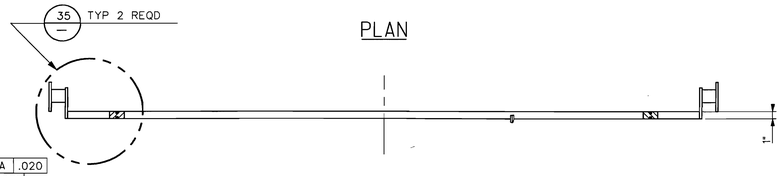

ELEVATION

DETAIL 28
SCALE: 1½"=1'-0"
24590-HLW-MK-HOP-P0001001

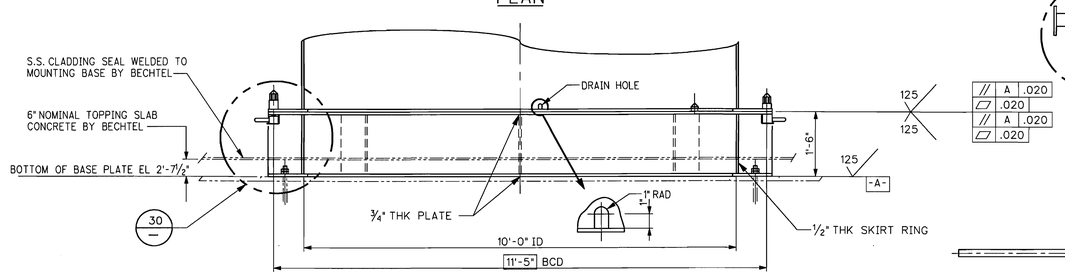

ELEVATION
MOUNTING BASE

DETAIL 27
SCALE: ¾"=1'-0"
24590-HLW-MK-HOP-P0001001

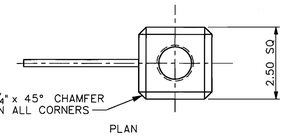

PLAN

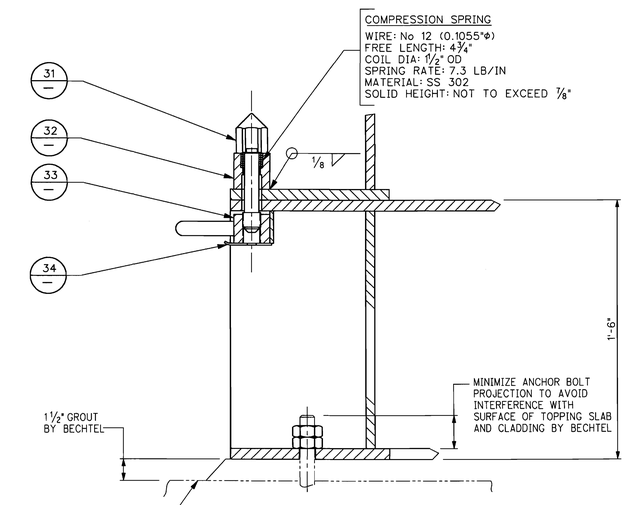

DETAIL 30
SCALE: 3"=1'-0"

TYPICAL 8 PLACES

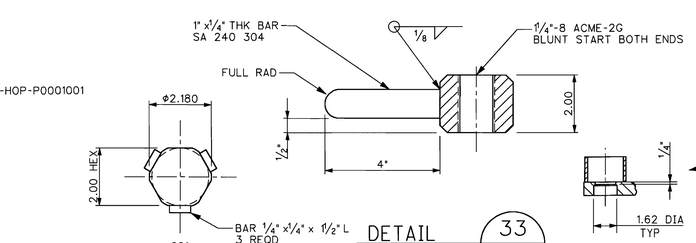

DETAIL 33
SCALE: 6"=1'-0"
MATERIAL: NITRONIC 60

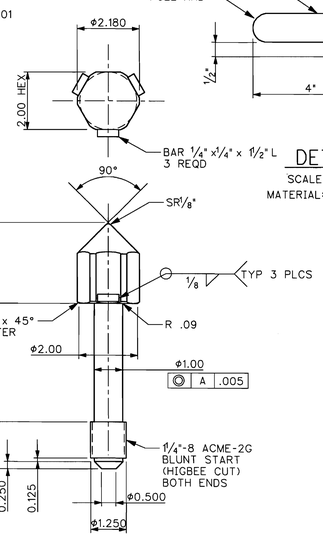

DETAIL 31
SCALE: 6"=1'-0"
MATERIAL: SA564-630 H1150

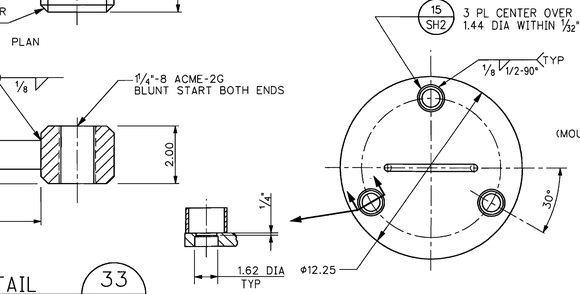

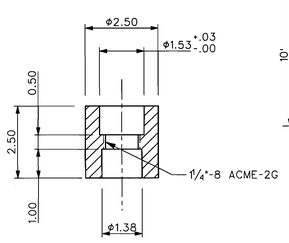

DETAIL 32
SCALE: 6"=1'-0"
MATERIAL: 304L SST

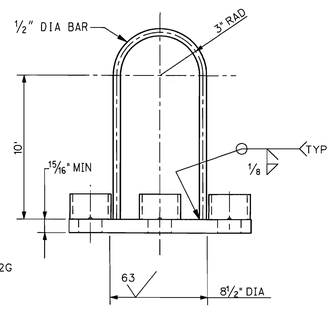

DETAIL 36
SCALE: 3"=1'-0"
24590-HLW-MK-HOP-P0001001

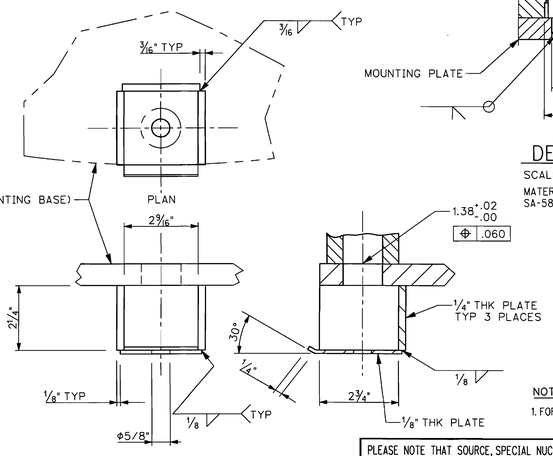

DETAIL 34
SCALE: 6"=1'-0"
MATERIAL: SS 304L

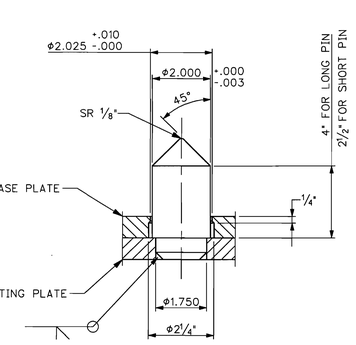

DETAIL 34
SCALE: 6"=1'-0"
MATERIAL: SA-582-416

NOTES:

1. FOR GENERAL NOTES, SEE 24590-HLW-MK-HOP-P0001001.

PLEASE NOTE THAT SOURCE, SPECIAL NUCLEAR AND BYPRODUCT MATERIALS, AS DEFINED IN THE ATOMIC ENERGY ACT OF 1954 (AEA), ARE REGULATED AT THE U.S. DEPARTMENT OF ENERGY (DOE) FACILITIES EXCLUSIVELY BY DOE ACTING PURSUANT TO ITS AEA AUTHORITY. DOE ASSERTS, THAT PURSUANT TO THE AEA, IT HAS SOLE AND EXCLUSIVE RESPONSIBILITY AND AUTHORITY TO REGULATE SOURCE, SPECIAL NUCLEAR, AND BYPRODUCT MATERIAL AT DOE-OWNED NUCLEAR FACILITIES. INFORMATION CONTAINED HEREIN ON RADIONUCLIDES IS PROVIDED FOR PROCESS DESCRIPTION PURPOSES ONLY.

REV	DESCRIPTION	ORG	CHKD	RVWD	APVD	DATE
0	ISSUED FOR PERMITTING USE					4/21/04

REVISION HISTORY

ISSUED BY RPP-WTP PDC — INIT / DATE — ISSUE STAMP

PROJECT No.	24590	
SITE	HANFORD	
AREA	200E	
BUILDING No.	30	

	BY	DATE
ORIGINATOR		4/16/04
CHECKER		04/20/04
APPROVER		4/21/04
REVIEWER		4/20/04

CONTENT APPLICABLE TO ALARA? [XX] YES [ ] NO
ADR NO. N/A REV:

RIVER PROTECTION PROJECT
WASTE TREATMENT PLANT
2435 STEVENS CENTER PLACE
RICHLAND, WA 99352

CONTRACT No: DE-AC27-01RV14136

EQUIPMENT ASSEMBLY
HLW SUBMERGED BED SCRUBBER
HOP-SCB-00001 (Q)
HOP-SCB-00002 (Q)
SHEET 4 OF 4

SCALE: AS SHOWN
24590-HLW-MK-HOP-P0001004
REV 0

FORM E_SDN.DGN 02/2003
'E' SIZE - 44x34
COMPUTER GENERATED - MANUAL CHANGES NOT PERMITTED
04/19/2004 08:18:34 AM
C:\Work\dms05070\HLW\MK\OP\P0001004.dgn

R10631606

MECHANICAL DATA SHEET: VESSEL

PLANT ITEM No. *24590-HLW-MV-HDH-VSL-00003*

Project:	***RPP-WTP***	P&ID:	***24590-HLW-M6-HDH-P0002***
Project No:	***24590***	Process Data Sheet:	***Deleted***
Project Site:	***Hanford***	Vessel Drawing	***24590-HLW-MV-HDH-P0003***
Description:	***Waste Neutralization Vessel***		

ISSUED BY ~~RPP-WTP PDC~~

Reference Data

Charge Vessels (Tag Numbers)	***N/A***
Pulsejet Mixers / Agitators (Tag Numbers)	***N/A***
RFDs/Pumps (Tag Numbers)	***N/A***

Design Data

Quality Level		***CM***	Fabrication Specs	***24590-WTP-3PS-MV00-TP001***		
Seismic Category		***SC-III***	Design Code	***ASME VIII Div 1***		
Service/Contents		***0.5 M Cerous Nitrate, 1M Nitric Acid, 5M NaOH, Demin Water***	Code Stamp	***Yes***		
Design Specific Gravity		***1.05*** 2	NB Registration	***Yes***		
Maximum Operating Volume	gal	***4819 (Note 4)***	Weights (lbs)	Empty	Operating	Test
Total Volume	gal	***5315 (Note 4)***	Estimated	***17,500***	***58,000***	***62,000***
Environmental Qualification 2		***N/A***	Actual *			

Inside Diameter	inch	***84***			Wind Design	***None***	
Length/Height (TL-TL)	inch	***204***			Snow Design	***None***	
		Vessel Operating	Vessel Design	Coil/Jacket Design	Seismic Design	***24590-WTP-3PS-MV00-TP002 24590-WTP-3PS-FB01-T0001***	
Internal Pressure	psig	***Atm***	***15***	***N/A***	Seismic Base Moment *	ft*lb	
External Pressure	psig	***Atm***	***FV***	***N/A***	Postweld Heat Treat	***None***	
Temperature	°F	***113***	***237 (Notes 5 and 6)*** 2	***N/A***	Corrosion Allowance	Inch	***0.04***
Min. Design Metal Temp.	°F	***16***			Hydrostatic Test Pressure *	psig	

Note: Please note that source, special nuclear and byproduct materials, as defined in the Atomic Energy Act of 1954 (AEA), are regulated at the U.S. Department of Energy (DOE) facilities exclusively by DOE acting pursuant to its AEA authority. DOE asserts, that pursuant to the source, special nuclear, and byproduct materials at DOE-owned nuclear facilities. Information contained herein on radionuclides is provided for process description purposes only.

ERIC B. ISERN
STATE OF WASHINGTON
33449
REGISTERED
PROFESSIONAL ENGINEER
9/22/05
EXPIRES: 07/28/07

This Bound Document Contains a total of 4 Sheets.

REV	DATE	REASON FOR REVISION	PREPARER	CHECKER	REVIEWER	APPROVER
2	9/22/05	Issued for Permitting Use				J. Julyk
1	3/24/04	Issued for Permitting Use	K. Brightman	B. Balakrishnan	C. Slater	M. Hoffmann
0	10/29/02	Issued for Permitting Use	J. Jackson	C. Slater	N/A	S. Kirk

DATA SHEET #: 24590-HLW-MVD-HDH-P0003, REV. 2

	MECHANICAL DATA SHEET: VESSEL	PLANT ITEM No. *24590-HLW-MV-HDH-VSL-00003*

Materials of Construction

Component	Material	Minimum Thickness / Size	Containment
Top Head	***SA-240 304 (Note 2)***	***See Drawing***	***Auxiliary***
Shell	***SA-240 304 (Note 2)***	***See Drawing***	***Primary***
Bottom Head	***SA-240 304 (Note 2)***	***See Drawing***	***Primary***
Support	***SA-240 304 (Note 2)***	***See Drawing***	***N/A***
Jacket/Coils/Half-Pipe Jacket	***SA-240 304 (Note 2)***	***See Drawing***	***N/A***
Internals	***SA-240 304 (Note 2)***	***See Drawing***	***Thermowells Primary***
Pipe	***SA-312 TP304 (Note 2)***	***See Drawing***	***Note 1***
Forgings/ Bar stock	***SA-182 F304 (Note 2)***	***See Drawing***	***N/A***
Bolting/Gaskets	***SA193 B8 CLASS 2, SPIRAL WOUND GRAPHITE FILLED***	***N/A***	***N/A***

Miscellaneous Data

Orientation	***Vertical***	Support Type	***Skirt***
Insulation Function	***Not Applicable***	Insulation Material	***Not Applicable***
Insulation Thickness (inch)	***Not Applicable***	Internal Finish	***Note 3***
		External Finish	***Note 3***

Remarks

* To be determined by the vendor.

Note 1: Nozzle necks below max. operating level are primary, others auxiliary.

Note 2: Maximum carbon content of 0.030% for all welded components.

Note 3: Welds descaled as laid.

Note 4: Vessel volumes are approximate and do not account for manufacturing tolerances, nozzles, and displacement of internals.

Note 5: For inlet nozzles/insert pipes N06/N06A, N07/N07A, N29/N29A, N30/N30A the temperature shall be 343°F at a pressure of 109 psig. 2

Note 6: For inlet nozzles N04 andN32 the temperature shall be 358°F at a pressure of 135 psig. 2

Equipment Cyclic Data Sheet

Component Plant Item Number:	***HDH-VSL-00003***
Component Description	***Parent Vessel***

The information below is provisional and envelopes operational duty for fatigue assessment. It is not to be used as operational data.

Materials of Construction	***SA-240-304 with0.030 % carbon.***
Design Life	***40 Years***
Component Function and Life Cycle Description	***The parent vessel is cyclically loaded and discharged in batch operation. In each batch operation, 2,037 gallons of liquid content is loaded and discharged.***

Load Type		Min	Max	Number of Cycles	Comment
Design Pressure	psig	***FV***	***15***	***10*** 2	***Nominal assumption*** 2
Operating Pressure	psig	***0***	***0***	***N/A*** 2	
Operating Temperature	°F	***68*** 2	***107*** 2	***N/A*** 2	
Contents Specific Gravity		***1.00***	***1.05*** 2	***N/A*** 2	
Contents Level	inch	***14***	***208***	***87,400*** 2	***A result of six one-hour cycles per day for 40 years*** 2
Localized Features					
Nozzles				***Normal operations will cause steam at 343°F temperature to enter the vessel via the inlet nozzles/insert pipes (N06/N06A, N07/N07A, N29/N29A, N30/N30A) six times per day, 1 hour each cycle.*** ***Normal operations will cause superheated steam at 358°F temperature to enter the vessel via inlet nozzles (N04, N32) twice per day, 8 hours each cycle.*** 2	
Supports					

Notes

- ***Cycle increase: The Seller must increase the numbers of operational cycles given above by 10% to account for commissioning duty unless otherwise noted.***
- ***Contents of this document are Dangerous Waste Permit affecting.***
- ***Nozzles N06/N06A, N07/N07A, N29/N29A, N30/N30A, and associated piping connected to ejectors shall be fatigue assessed/analyzed for pressure/temperature cycles over 40 years from 0 psig at 59°F to 109 psig at 343°F temperature. The pressure cycles shall coincide with temperature cycles.*** 2
- ***Nozzles N04, N32, and associated piping connected to ejectors shall be fatigue assessed/analyzed for pressure/temperature cycles over 40 years from 0 psig at 59°F to 135 psig at 358°F temperature. The pressure cycles shall coincide with temperature cycles.*** 2
- ***Heat Transfer summary for vessel:*** 2

  2 ***A. Cell Ambient Temperature: Min. 59 °F, Max. 95 °F***

  2 ***B. Headspace temperature: 107 °F***

  2 ***C. Ambient and headspace natural convection heat transfer coefficients = 1.63 BTU/h-ft2-°F***

  **** Ignoring forced convection inside the vessel is bounding assumption.***

  2 ***D. Ejector transfers from vessel (Nozzles N06/N06A, N07/N07A, N29/N29A, N30/N30A):***

  - ***Only one of these nozzles will be used at a time during transfers.***
  - ***Transfer frequency: Refer to Equipment Cyclic Data, page 3***
  - ***Steam mass flow rate = 610 lb/hr***

  2 ***E. Condensate transfers (Nozzles N04/N32):***

  - ***These nozzles can be utilized simultaneously during transfers.***
  - ***Transfer frequency: Refer to Equipment Cyclic Data, page 3***
  - ***Steam mass flow rate = 230 lb/hr***

  2 ***F. During operation, one ejector transfer and one condensate transfer can take place simultaneously.***

R10660667

BECHTEL	**MECHANICAL DATA SHEET: VESSEL**	**PLANT ITEM No.** ***24590-HLW-MV-HDH-VSL-00002***

Project:	***RPP-WTP***	P&ID:	***24590-HLW-M6-HDH-P0001***
Project No:	***24590***	Process Data Sheet:	***24590-HLW-MTD-HDH-00001*** 2
Project Site:	***Hanford***	Vessel Drawing	***24590-HLW-MV-HDH-P0004, P0005***
Description:	***Canister Decon Vessel 1***		

ISSUED BY RPP-WTP PDC

Reference Data

Charge Vessels (Tag Numbers)	***Not Required***
Pulsejet Mixers / Agitators (Tag Numbers)	***Not Required***
RFDs/Pumps (Tag Numbers)	***Not Required***

Design Data

Quality Level		***CM***	Fabrication Specs	***24590-WTP-3PS-MV00-TP001***		
Seismic Category		***SC-III***	Design Code	***Generally to ASME VIII Div 1***		
Service/Contents		***Nitric Acid, Water, Ceric Nitrate***	Code Stamp	***No***		
Design Specific Gravity		***1.25***	NB Registration	***No***		
Maximum Operating Volume	gal	***212 with Canister in Vessel***	Weights (lbs)	Empty	Operating	Test
Total Volume	gal	***630***	Estimated	***3400***	***21,200***	***21,200***
Environmental Qualification 2		***N/A***	Actual *			

Inside Diameter	inch	***30***			Wind Design	***None***	
Length/Height (TL-TL)	inch	***220 (OAL)*** 2			Snow Design	***None***	
		Vessel Operating	Vessel Design	Coil/Jacket Design	Seismic Design	***24590-WTP-3PS-MV00-TP002*** ***24590-WTP-3PS-FB01-T0001***	
Internal Pressure	psig	***Atm***	***15***	***Note 1***	Seismic Base Moment *	ft*lb	
External Pressure	psig	***Atm***	***Atm***	***Note 1***	Postweld Heat Treat	***None***	
Temperature	°F	***149***	***225***	***Note 1***	Corrosion Allowance	Inch	***0.04***
Min. Design Metal Temp.	°F	***40***			Hydrostatic Test Pressure *	psig	

Note: Please note that source, special nuclear and byproduct materials, as defined in the Atomic Energy Act of 1954 (AEA), are regulated at the U.S. Department of Energy (DOE) facilities exclusively by DOE acting pursuant to its AEA authority. DOE asserts, that pursuant to the AEA, it has sole and exclusive responsibility and authority to regulate source, special nuclear, and byproduct materials at DOE-owned nuclear facilities. Information contained herein on radionuclides is provided for process description purposes only.

ERIC B. ISERN
STATE OF WASHINGTON
33449
REGISTERED
PROFESSIONAL ENGINEER
12/6/05
EXPIRES: 07/28/07

This Bound Document Contains a total of 3 Sheets.

REV	DATE	REASON FOR REVISION	PREPARER	CHECKER	REVIEWER	APPROVER
2	12/27/05	Issued for Permitting Use	J. Thompson	B. Makadia / L. Han	C. Slater	J. Julyk
1	3/24/04	Issued for Permitting Use	K. Brightman	B. Balakrishnan	C. Slater	M. Hoffmann
0	10/29/02	Issued for Permitting Use	J. Jackson	C. Slater	N/A	S. Kirk

BECHTEL	**MECHANICAL DATA SHEET: VESSEL**	**PLANT ITEM No.** ***24590-HLW-MV-HDH-VSL-00002***

Materials of Construction

Component	Material	Minimum Thickness / Size	Containment
Lid Assembly	***B-265 2***	***See Drawing***	***N/A***
Shell	***B-265 2***	***See Drawing***	***N/A***
Bottom Head	***B-265 2***	***See Drawing***	***N/A***
Support	***B-265 2***	***See Drawing***	***N/A***
Shaft	***304SS Minimum***	***N/A***	***N/A***
Bearings	***304SS Minimum***	***N/A***	***N/A***
Pipe	***B-861/B-363 Seamless***	***See Drawing***	***N/A***
Tubing	***B-338 2***	***See Drawing***	***N/A***
Forgings/ Bar stock	***B-381 F2 / SB348-2 Note 5*** 2	***See Drawing***	***N/A***
Gaskets	***Note 3***	***N/A***	***N/A***
Bolting	***A-193 B8 / A-194 8***	***N/A***	***N/A***

Miscellaneous Data

Orientation	***Vertical***	Support Type	***Collar***
Insulation Function	***Not Applicable***	Insulation Material	***Not Applicable***
Insulation Thickness (inch)	***Not Applicable***	Internal Finish	***Welds Descaled as Laid***
		External Finish	***Welds Descaled as Laid***

Remarks

* To be determined by the vendor.

Note 1: Steam coil design pressure = 180 psig, design temperature = 393°F
Cooling coil design pressure = 119 psig, design temperature = 174°F

Note 2: Vessel volumes are approximate and do not account for manufacturing tolerances, nozzles, and displacement of internals.

Note 3: Body flange gasket shall be Garlock Helicoflex HN 208A seal configuration with titanium jacket. 2

Note 4: Contents of this document are Dangerous Waste Permit affecting.

BECHTEL	**MECHANICAL DATA SHEET: VESSEL**	PLANT ITEM No. ***24590-HLW-MV-HDH-VSL-00002***

Equipment Cyclic Data Sheet

Component Plant Item Number:	***HDH-VSL-00002***
Component Description	***Melter 1 Canister Decon Vessel***

The information below is provisional and envelopes operational duty for fatigue assessment. It is not to be used as operational data.

Materials of Construction	***SB-265 2***
Design Life	***40 Years***
Component Function and Life Cycle Description	***A cycle consists of the following:*** • ***A 10,000 lb canister will be loaded into the vessel and the lid will be closed*** • ***The vessel will fill to the overflow with one-molar nitric acid and Cerium +4 solution.*** • ***The heating coil will raise the temperature of the liquid from 68°F to 149°F.*** • ***Heating and cooling coils will maintain the temperature of the liquid at 149°F for 6 hours.*** • ***The nitric acid solution will be drained from the vessel*** • ***The upper and lower spray rings will rinse the canister with nitric acid and demineralized water*** • ***Flow to the upper spray ring will stop, the lid will open, and the canister will be slowly removed from the vessel while the lower spray ring continues to rinse the canister.***

Load Type		Min	Max	Number of Cycles	Comment
Design Pressure	psig	***N/A***	***N/A***	***N/A***	
Operating Pressure	psig	***Atm***	***Atm***	***29,200***	
Operating Temperature	°F	***48***	***149***	***29,200***	
Contents Specific Gravity		***1.00***	***1.25***	***29,200***	
Contents Level	inch	***Empty***	***Full***	***29,200***	
Localized Features					
Vessel and Supports		***Empty / Full+Canister***		***29,200***	

Notes

Cycle Increase: The Seller must increase the numbers of operational cycles given above by 10% to account for commissioning duty unless otherwise noted.

Note 5: Bar SB348-2 is used for Spray Nozzles PIN 08D & 09D, Rollers and Roller Pins PIN 18C & 18D, Thermowells PIN 38A & 38C, Stabilizer bars PIN 19B, Lid Hold Downs PIN 28B & 31K. 2

BECHTEL	**MECHANICAL DATA SHEET: VESSEL**	PLANT ITEM No. R10656187 *24590-HLW-MV-HDH-VSL-00002*

Project:	*RPP-WTP*	P&ID:	*24590-HLW-M6-HDH-00001*	ISSUED BY RPP-WTP PDC
Project No:	*24590*	Process Data Sheet:	*24590-HLW-MTD-HDH-00001*	
Project Site:	*Hanford*	Vessel Drawing	*24590-HLW-MV-HDH-00004, 00005*	
Description:	*Canister Decon Vessel 1*			

Reference Data

Charge Vessels (Tag Numbers)	*Not Required*
Pulsejet Mixers / Agitators (Tag Numbers)	*Not Required*
RFDs/Pumps (Tag Numbers)	*Not Required*

Design Data

Quality Level		*CM*	Fabrication Specs	*24590-WTP-3PS-MV00-T0001*		
Seismic Category		*SC-III*	Design Code	*Generally to ASME VIII Div 1*		
Service/Contents		*Nitric Acid, Water, Ceric Nitrate*	Code Stamp	*No*		
Design Specific Gravity		*1.25*	NB Registration	*No*		
Maximum Operating Volume	gal	*212 with Canister in Vessel*	Weights (lbs)	Empty	Operating	Test
Total Volume	gal	*630*	Estimated	*3400*	*21,200*	*21,200*
ENVIRONMENTAL QUALIFICATION: N/A			Actual *			

Inside Diameter	inch	*30*			Wind Design	*None*	
Length/Height (TL-TL)	inch	*220 (OAL)*			Snow Design	*None*	
		Vessel Operating	Vessel Design	Coil/Jacket Design	Seismic Design	*24590-WTP-3PS-MV00-T0002* *24590-WTP-3PS-FB01-T0001*	
Internal Pressure	psig	*Atm*	*15*	*Note 1*	Seismic Base Moment *	ft*lb	
External Pressure	psig	*Atm*	*Atm*	*Note 1*	Postweld Heat Treat	*None*	
Temperature	°F	*149*	*225*	*Note 1*	Corrosion Allowance	Inch	*0.04*
Min. Design Metal Temp.	°F	*40*			Hydrostatic Test Pressure *	psig	

Materials of Construction

Component	Material	Minimum Thickness / Size	Containment
Lid Assembly	*B-265 2*	*See Drawing*	*N/A*
Shell	*B-265 2*	*See Drawing*	*N/A*
Bottom Head	*B-265 2*	*See Drawing*	*N/A*
Support	*B-265 2*	*See Drawing*	*N/A*
Shaft	*304SS Minimum*	*N/A*	*N/A*
Bearings	*304SS Minimum*	*N/A*	*N/A*
Pipe	*B-861/B-363 Seamless*	*See Drawing*	*N/A*
Tubing	*B-338 2*	*See Drawing*	*N/A*
Forgings/ Bar stock	*B-381 F2 / SB348-2 Note 5*	*See Drawing*	*N/A*
Gaskets	*Note 3*	*N/A*	*N/A*
Bolting	*A-193 B8 / A-194 8*	*N/A*	*N/A*

Miscellaneous Data

Orientation	*Vertical*	Support Type	*Collar*
Insulation Function	*Not Applicable*	Insulation Material	*Not Applicable*
Insulation Thickness (inch)	*Not Applicable*	Internal Finish	*Welds Descaled as Laid*
		External Finish	*Welds Descaled as Laid*

Remarks

* To be determined by the vendor.

Note 1: ***Steam coil design pressure = 180 psig, design temperature = 393°F***
Cooling coil design pressure = 119 psig, design temperature = 174°F

Note 2: ***Vessel volumes are approximate and do not account for manufacturing tolerances, nozzles, and displacement of internals.***

Note 3: ***Body flange gasket shall be Garlock Helicoflex HN 208A seal configuration with titanium jacket.*** 3

Note 4: ***Contents of this document are Dangerous Waste Permit affecting.***

BECHTEL	**MECHANICAL DATA SHEET: VESSEL**	**PLANT ITEM No.** ***24590-HLW-MV-HDH-VSL-00002***

Equipment Cyclic Data Sheet

Component Plant Item Number:	***HDH-VSL-00002***
Component Description	***Melter 1 Canister Decon Vessel***

The information below is provisional and envelopes operational duty for fatigue assessment. It is not to be used as operational data.

Materials of Construction	***SB-265 2***
Design Life	***40 Years***
Component Function and Life Cycle Description	***A cycle consists of the following:*** • ***A 10,000 lb canister will be loaded into the vessel and the lid will be closed*** • ***The vessel will fill to the overflow with one-molar nitric acid and Cerium +4 solution.*** • ***The heating coil will raise the temperature of the liquid from 68°F to 149°F.*** • ***Heating and cooling coils will maintain the temperature of the liquid at 149°F for 6 hours.*** • ***The nitric acid solution will be drained from the vessel*** • ***The upper and lower spray rings will rinse the canister with nitric acid and demineralized water*** • ***Flow to the upper spray ring will stop, the lid will open, and the canister will be slowly removed from the vessel while the lower spray ring continues to rinse the canister.***

Load Type		Min	Max	Number of Cycles	Comment
Design Pressure	psig	***N/A***	***N/A***	***N/A***	
Operating Pressure	psig	***Atm***	***Atm***	***29,200***	
Operating Temperature	°F	***48***	***149***	***29,200***	
Contents Specific Gravity		***1.00***	***1.25***	***29,200***	
Contents Level	inch	***Empty***	***Full***	***29,200***	
Localized Features					
Vessel and Supports		***Empty / Full+Canister***		***29,200***	

Notes

Cycle Increase: The Seller must increase the numbers of operational cycles given above by 10% to account for commissioning duty unless otherwise noted.

Note 5: Bar SB348-2 is used for Spray Nozzles PIN 08D & 09D, Rollers and Roller Pins PIN 18C & 18D, Thermowells PIN 38A & 38C, Stabilizer bars PIN 19B, Lid Hold Downs PIN 28B & 31K.

Approval

Rev	Description	System Engr	Vessel Engr	Checked	Reviewed	Approved	Date
0	**Issue for Purchase**	D. Choi	R. Simmons	M. Staley C. Slater	M. Wright	M. Hoffmann	6/16/03
1	**Revised as Indicated**	G. Fenton	R. Simmons	T. Galioto C. Slater	D. Yarbrough	M. Hoffmann	10/29/03
2	**Issued to Incorporate 24590-WTP-SDDR-PROC-04-01079**	R. Tometczak	Paul Polani	Steve Crow	Jeff Pullen	M. Hoffmann	1/21/05
3	**Revised per Note 3 on sheet 1 of 2.**	[illegible]	BVM	[illegible]	[illegible]	[illegible]	11/28/05

R10272919

MECHANICAL SYSTEMS DATA SHEET: VESSEL

PLANT ITEM No.
24590-HLW-MV-HDH-VSL-00001

ISSUED BY RPP-WTP PDC
INIT DATE

Project:	RPP-WTP	P&ID:	24590-HLW-M6-HDH-P0002
Project No:	24590	Process Data Sheet:	N/A
Project Site:	Hanford	Vessel Drawing	Part of Canister Rinse Bogie Drawing by Mechanical Handling, see 24590-HLW-M0-HDH-P0012001 and 24590-HLW-M0-HDH-P0012002.
Description:	Canister Rinse Tunnel Canister Rinse Vessel		

Reference Data

Charge Vessels (Tag Numbers)	N/A
Pulsejet Mixers / Agitators (Tag Numbers)	N/A
RFDs/Pumps (Tag Numbers)	N/A

Design Data

Quality Level		Commercial Grade	Fabrication Specs	Generally in accordance with ASME SEC VIII D1		
Seismic Category		SC-III	Design Code	Generally in accordance with ASME SEC VIII D1 (Note 4)		
Service/Contents		Water / Possibly Radioactive	Code Stamp	N/A		
Design Specific Gravity		1.00	NB Registration	N/A		
Maximum Operating Volume	gal	360 (Note 8)	Weights (lbs)	Empty	Operating	Test
Total Volume	gal	3314 (Note 8)	Estimated		(Note 3)	
			Actual *			

Inside Diameter	inch	71 (Note 6)			Wind Design	N/A	
Length/Height (TL-TL)	inch	204.75 (Note 6)			Snow Design	N/A	
		Vessel Operating	Vessel Design	Coil/Jacket Design	Seismic Design	24590-WTP-3PS-MV00-TP002 24590-WTP-3PS-FB01-T0001	
Internal Pressure	psig	ATM	10 (Note5)		Seismic Base Moment *	ft*lb	
External Pressure	psig	ATM	ATM		Postweld Heat Treat		
Temperature	°F	68	212		Corrosion Allowance	Inch	0.04 (Note 9)
Min. Design Metal Temp.	°F	50			Hydrostatic Test Pressure *	psig	

Note:
Please note that source, special nuclear and byproduct materials, as defined in the Atomic Energy Act of 1954 (AEA), are regulated at the U.S. Department of Energy (DOE) facilities exclusively by DOE acting pursuant to its AEA authority. DOE asserts, that pursuant to the AEA, it has sole and exclusive responsibility and authority to regulate source, special nuclear, and byproduct materials at DOE-owned nuclear facilities. Information contained herein on radionuclides is provided for process description purposes only.

Grant D. Mann 3/19/04

GRANT D. MANN
STATE OF WASHINGTON
23170
REGISTERED
PROFESSIONAL ENGINEER
EXPIRES: 12-26-05

This Bound Document Contains a total of 4 pages.

REV	DATE	REASON FOR REVISION	PREPARER	CHECKER	REVIEWER	APPROVER
0	3/18/04	Issued for Permitting Use				

DATA SHEET #:24590-HLW-MVD-HDH-P0009, Rev 0

	MECHANICAL SYSTEMS DATA SHEET: VESSEL	PLANT ITEM No. 24590-HLW-MV-HDH-VSL-00001

Materials of Construction

Component	Material	Minimum Thickness / Size	Containment
Top Head	***N/A (Note 1)***	***N/A***	
Shell	***SA 240 316 with max. carbon of 0.030%***	*	
Bottom Head	***SA 240 316 with max. carbon of 0.030% (Note 7)***	*	
Support	***N/A***	***N/A***	
Jacket/Coils/Half-Pipe Jacket	***N/A***	***N/A***	
Internals	***N/A***	***N/A***	
Pipe	***SA 312 316 with max. carbon of 0.030%***	***N/A***	
Forgings/ Bar stock	***N/A***	***N/A***	
Bolting/Gaskets			

Miscellaneous Data

Orientation	***Vertical***	Support Type	***Bogie (Note 2)***
Insulation Function	***Not Applicable***	Insulation Material	***N/A***
Insulation Thickness (inch)	***Not Applicable***	Internal Finish	*
		External Finish	*

Remarks

* To be determined by the vendor.

NOTE 1: VESSEL TO BE PROVIDED WITH AN OPEN TOP AND AN INFLATABLE SEAL DESIGN OR APPROVED EQUAL (BY SUPPLIER). RECOMMENDED MATERIAL IS EPDM.

NOTE 2: VESSEL IS TO BE MOUNTED ON BOGIE.

NOTE 3: VESSEL TO SUPPORT A CANISTER WEIGHING APPROXIMATELY 10,000 LBS, AS WELL AS SUPPORT A SPRAY AND GUIDE ASSEMBLY. THE CANISTER WILL BE PLACED INSIDE THE VESSEL TO BE SPRAYED WITH WATER.

NOTE 4: PERFORM 100% RADIOGRAPHY.

NOTE 5: DUE TO WATER STATIC HEAD IF RINSE BOGIE PUMP MALFUNCTIONS AND WATER CONTINUES TO FILL UP THE VESSEL.

NOTE 6: FABRICATION TOLERANCES BETWEEN VESSEL AND BOGIE IS THE RESPONSIBILITY OF THE SUPPLIER.

NOTE 7: VESSEL BOTTOM HEAD (TORISPHERICAL DISHED END) SPECIFIED BY BOGIE SUPPLIER.

NOTE 8: VESSEL VOLUMES ARE NOMINAL AND DO NOT ACCOUNT FOR MANUFACTURING TOLERANCES, NOZZLES, AND DISPLACEMENT OF INTERNALS.

NOTE 9: THE CORROSION ALLOWANCE SHALL BE APPLIED TO EACH SURFACE EXPOSED TO PROCESS VAPOR OR LIQUID.

BECHTEL	**MECHANICAL SYSTEMS DATA SHEET: VESSEL**	**PLANT ITEM No.** ***24590-HLW-MV-HDH-VSL-00001***

Equipment Cyclic Data Sheet

Component Plant Item Number:	***24590-HLW-MV-HDH-VSL-00001***
Component Description	***Canister Rinse Tunnel Canister Rinse Vessel***

The information below is provisional and envelopes operational duty for fatigue assessment. It is not to be used as operational data.

Materials of Construction	***A 240 316L***
Design Life	***40 Years***
Component Function and Life Cycle Description	***Transport and spray HLW canister.***

Load Type		Min	Max	Number of Cycles	Comment
Design Pressure (-ve/+ve)	psig	***N/A***	***N/A***	***N/A***	
Operating Pressure (-ve/+ve)	psig	***Atm***	***Atm***	***N/A***	
Operating Temperature	°F	***59***	***200***	***29,200***	***Fluid minimum temperature based on process datasheet 24590-HLW-MVD-HDH-00004***
Contents Specific Gravity		***1.00***	***1.00***	***N/A***	
Contents Level	inch	***Empty***	***Full***	***29,200***	
Localized Features					
Nozzles				***Three - 1 inch level transmitter; One - 2 inch vent line***	
Air Inlet				***One - 1 inch air inlet***	
Delivery				***Two - 2 inch water inlet; One - 3 inch pump suction***	
Supports				***Canister supports shall withstand 29,200 life time cycles of loading and unloading of the canister weighed approx. 10,000 lb.***	

Notes

Cycle Increase: The Seller must increase the numbers of operational cycles given above by 10% to account for commissioning duty unless otherwise noted.

Nozzle	Description	Size		
1	Inflatable Boot Air Supply	1"		
2	Water Supply to Upper Spray Assembly	2"		
3	Water Supply to Lower Spray Assembly	2"		
7	Level Transmitter Nozzle	1"	Size provided by Vendor	
8	Level Transmitter Nozzle	1"		
6	Level Transmitter Nozzle	1"		
5	Vessel Effluent to Pump Suction	3"	Size provided by Vendor	
4	Vessel Vent Line	2"	Size provided by Vendor	

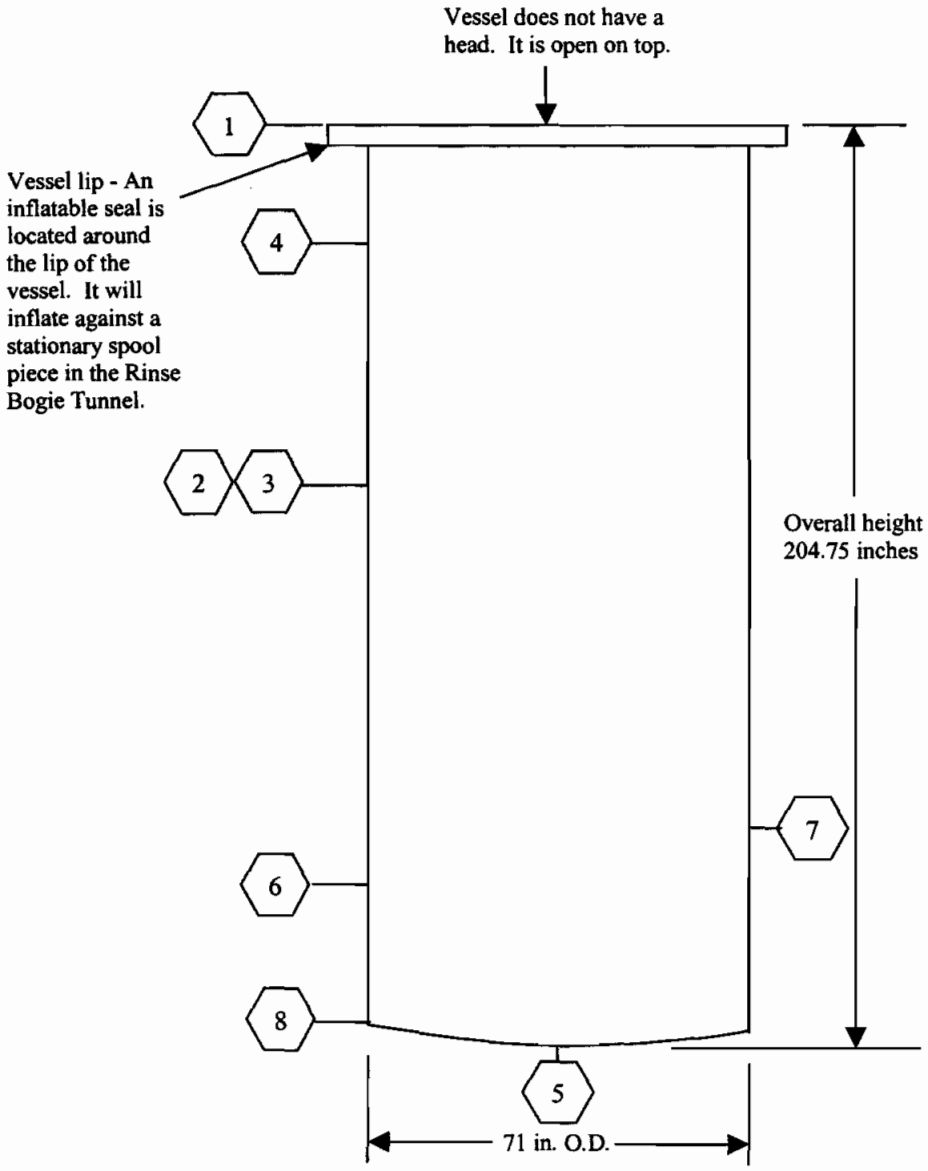

R10660668

BECHTEL	**MECHANICAL DATA SHEET: VESSEL**	PLANT ITEM No. ***24590-HLW-MV-HDH-VSL-00004***

Project:	***RPP-WTP***	P&ID:	***24590-HLW-M6-HDH-P20001***
Project No:	***24590***	Process Data Sheet:	***24590-HLW-MVD-HDH-00010*** 1
Project Site:	***Hanford***	Vessel Drawing	***24590-HLW-MV-HDH-P0006, 24590-HLW-MV-HDH-P0007***
Description:	***Canister Decon Vessel 2***		

Reference Data

ISSUED BY RPP-WTP PDC

Charge Vessels (Tag Numbers)	***Not Required***
Pulsejet Mixers / Agitators (Tag Numbers)	***Not Required***
RFDs/Pumps (Tag Numbers)	***Not Required***

Design Data

Quality Level		***CM***	Fabrication Specs	***24590-WTP-3PS-MV00-TP001***		
Seismic Category		***SC-III***	Design Code	***Generally to ASME VIII Div 1***		
Service/Contents		***Nitric Acid, Water, Ceric Nitrate***	Code Stamp	***No***		
Design Specific Gravity		***1.25***	NB Registration	***No***		
Maximum Operating Volume	gal	***212 with Canister in Vessel***	Weights (lbs)	Empty	Operating	Test
Total Volume	gal	***630***	Estimated	***3400***	***21,200***	***21,200***
Environmental Qualification	1	***N/A***	Actual *			

Inside Diameter	inch	***30***			Wind Design	***None***	
Length/Height (TL-TL)	inch	***220 (OAL)***			Snow Design	***None***	
		Vessel Operating	Vessel Design	Coil/Jacket Design	Seismic Design	***24590-WTP-3PS-MV00-TP002 24590-WTP-3PS-FB01-T0001***	
Internal Pressure	psig	***Atm***	***15***	***Note 1***	Seismic Base Moment *	ft*lb	
External Pressure	psig	***Atm***	***Atm***	***Note 1***	Postweld Heat Treat	***None***	
Temperature	°F	***149***	***225***	***Note 1***	Corrosion Allowance	Inch	***0.04***
Min. Design Metal Temp.	°F	***40***			Hydrostatic Test Pressure *	psig	

Note: Please note that source, special nuclear and byproduct materials, as defined in the Atomic Energy Act of 1954 (AEA), are regulated at the U.S. Department of Energy (DOE) facilities exclusively by DOE acting pursuant to its AEA authority. DOE asserts, that pursuant to the AEA, it has sole and exclusive responsibility and authority to regulate source, special nuclear, and byproduct materials at DOE-owned nuclear facilities. Information contained herein on radionuclides is provided for process description purposes only.

ERIC B. ISERN
STATE OF WASHINGTON
33449
REGISTERED
PROFESSIONAL ENGINEER
12/6/05
EXPIRES: 07/28/07

This Bound Document Contains a total of 3 Sheets.

REV	DATE	REASON FOR REVISION	PREPARER	CHECKER	REVIEWER	APPROVER
1	12/27/05	Issued for Permitting Use	C. Thompson	B. Makadia / L. Han	C. Slater	J. Julyk
0	3/24/04	Issued for Permitting Use	K. Brightman	B. Balakrishnan	C. Slater	M. Hoffmann

BECHTEL	**MECHANICAL DATA SHEET: VESSEL**	**PLANT ITEM No.** ***24590-HLW-MV-HDH-VSL-00004***

Materials of Construction

Component	Material	Minimum Thickness / Size	Containment
Lid Assembly	***B-265 2***	***See Drawing***	***N/A***
Shell	***B-265 2***	***See Drawing***	***N/A***
Bottom Head	***B-265 2***	***See Drawing***	***N/A***
Support	***B-265 2***	***See Drawing***	***N/A***
Shaft	***304SS Minimum***	***N/A***	***N/A***
Bearings	***304SS Minimum***	***N/A***	***N/A***
Pipe	***B-861/B-363 Seamless***	***See Drawing***	***N/A***
Tubing	***B-338 2***	***See Drawing***	***N/A***
Forgings/ Bar stock	***B-381 F2 / SB348-2 Note 5*** 1	***See Drawing***	***N/A***
Gaskets	***Note 3***	***N/A***	***N/A***
Bolting	***A-193 B8 / A-194 8***	***N/A***	***N/A***

Miscellaneous Data

Orientation	***Vertical***	Support Type	***Collar***
Insulation Function	***Not Applicable***	Insulation Material	***Not Applicable***
Insulation Thickness (inch)	***Not Applicable***	Internal Finish	***Welds Descaled as Laid***
		External Finish	***Welds Descaled as Laid***

Remarks

* To be determined by the vendor.

Note 1: Steam coil design pressure = 180 psig, design temperature = 393°F
Cooling coil design pressure = 119 psig, design temperature = 174°F

Note 2: Vessel volumes are approximate and do not account for manufacturing tolerances, nozzles, and displacement of internals.

Note 3: Body flange gasket shall be Garlock Helicoflex HN 208A seal configuration with titanium jacket. 1

Note 4: Contents of this document are Dangerous Waste Permit affecting.

BECHTEL	**MECHANICAL DATA SHEET: VESSEL**	**PLANT ITEM No.** ***24590-HLW-MV-HDH-VSL-00004***

Equipment Cyclic Data Sheet

Component Plant Item Number:	***HDH-VSL-00004***
Component Description	***Canister Decon Vessel 2***

The information below is provisional and envelopes operational duty for fatigue assessment. It is not to be used as operational data.

Materials of Construction	***SB-265 2***
Design Life	***40 Years***
Component Function and Life Cycle Description	***A cycle consists of the following:*** • ***A 10,000 lb canister will be loaded into the vessel and the lid will be closed*** • ***The vessel will fill to the overflow with one-molar nitric acid and Cerium +4 solution.*** • ***The heating coil will raise the temperature of the liquid from 68°F to 149°F.*** • ***Heating and cooling coils will maintain the temperature of the liquid at 149°F for 6 hours.*** • ***The nitric acid solution will be drained from the vessel*** • ***The upper and lower spray rings will rinse the canister with nitric acid and demineralized water*** • ***Flow to the upper spray ring will stop, the lid will open, and the canister will be slowly removed from the vessel while the lower spray ring continues to rinse the canister.***

Load Type		Min	Max	Number of Cycles	Comment
Design Pressure	psig	***N/A***	***N/A***	***N/A***	
Operating Pressure	psig	***Atm***	***Atm***	***29,200***	
Operating Temperature	°F	***48***	***149***	***29,200***	
Contents Specific Gravity		***1.00***	***1.25***	***29,200***	
Contents Level	inch	***Empty***	***Full***	***29,200***	
Localized Features					
Vessel and Supports		***Empty / Full+Canister***		***29,200***	

Notes

Cycle increase: The Seller must increase the numbers of operational cycles given above by 10% to account for commissioning duty unless otherwise noted.

Note 5: Bar SB348-2 is used for Spray Nozzles PIN 08D & 09D, Rollers and Roller Pins PIN 18C & 18D, Thermowells PIN 38A & 38C, Stabilizer bars PIN 19B, Lid Hold Downs PIN 28B & 31K. 1

BECHTEL	**MECHANICAL DATA SHEET: VESSEL**	PLANT ITEM No. R10658188 *24590-HLW-MV-HDH-VSL-00004*

Project:	***RPP-WTP***	P&ID:	***24590-HLW-M6-HDH-20001***
Project No:	***24590***	Process Data Sheet:	***24590-HLW-MVD-HDH-00010***
Project Site:	***Hanford***	Vessel Drawing	***24590-HLW-MV-HDH-00006, 24590-HLW-MV-HDH-00007***
Description:	***Canister Decon Vessel 2***		

Reference Data

ISSUED BY RPP-WTP PDC

Charge Vessels (Tag Numbers)	***Not Required***
Pulsejet Mixers / Agitators (Tag Numbers)	***Not Required***
RFDs/Pumps (Tag Numbers)	***Not Required***

Design Data

Quality Level		***CM***	Fabrication Specs	***24590-WTP-3PS-MV00-T0001***		
Seismic Category		***SC-III***	Design Code	***Generally to ASME VIII Div 1***		
Service/Contents		***Nitric Acid, Water, Ceric Nitrate***	Code Stamp	***No***		
Design Specific Gravity		***1.25***	NB Registration	***No***		
Maximum Operating Volume	gal	***212 with Canister in Vessel***	Weights (lbs)	Empty	Operating	Test
Total Volume	gal	***630***	Estimated	***3400***	***21,200***	***21,200***
ENVIRONMENTAL QUALIFICATION: N/A			Actual *			

Inside Diameter	inch	***30***			Wind Design	***None***	
Length/Height (TL-TL)	inch	***220 (OAL)***			Snow Design	***None***	
		Vessel Operating	Vessel Design	Coil/Jacket Design	Seismic Design	***24590-WTP-3PS-MV00-T0002*** ***24590-WTP-3PS-FB01-T0001***	
Internal Pressure	psig	***Atm***	***15***	***Note 1***	Seismic Base Moment *	ft*lb	
External Pressure	psig	***Atm***	***Atm***	***Note 1***	Postweld Heat Treat	***None***	
Temperature	°F	***149***	***225***	***Note 1***	Corrosion Allowance	Inch	***0.04***
Min. Design Metal Temp.	°F	***40***			Hydrostatic Test Pressure *	psig	

Materials of Construction

Component	Material	Minimum Thickness / Size	Containment
Lid Assembly	***B-265 2***	***See Drawing***	***N/A***
Shell	***B-265 2***	***See Drawing***	***N/A***
Bottom Head	***B-265 2***	***See Drawing***	***N/A***
Support	***B-265 2***	***See Drawing***	***N/A***
Shaft	***304SS Minimum***	***N/A***	***N/A***
Bearings	***304SS Minimum***	***N/A***	***N/A***
Pipe	***B-861/B-363 Seamless***	***See Drawing***	***N/A***
Tubing	***B-338 2***	***See Drawing***	***N/A***
Forgings/ Bar stock	***B-381 F2 / SB348-2 Note 5***	***See Drawing***	***N/A***
Gaskets	***Note 3***	***N/A***	***N/A***
Bolting	***A-193 B8 / A-194 8***	***N/A***	***N/A***

Miscellaneous Data

Orientation	***Vertical***	Support Type	***Collar***
Insulation Function	***Not Applicable***	Insulation Material	***Not Applicable***
Insulation Thickness (inch)	***Not Applicable***	Internal Finish	***Welds Descaled as Laid***
		External Finish	***Welds Descaled as Laid***

Remarks

* To be determined by the vendor.

Note 1: Steam coil design pressure = 180 psig, design temperature = 393°F
Cooling coil design pressure = 119 psig, design temperature = 174°F

Note 2: Vessel volumes are approximate and do not account for manufacturing tolerances, nozzles, and displacement of internals.

Note 3: Body flange gasket shall be Garlock Helicoflex HN 208A seal configuration with titanium jacket. 2

Note 4: Contents of this document are Dangerous Waste Permit affecting.

BECHTEL	**MECHANICAL DATA SHEET: VESSEL**	**PLANT ITEM No.** ***24590-HLW-MV-HDH-VSL-00004***

Equipment Cyclic Data Sheet

Component Plant Item Number:	***HDH-VSL-00004***
Component Description	***Canister Decon Vessel 2***

The information below is provisional and envelopes operational duty for fatigue assessment. It is not to be used as operational data.

Materials of Construction	***SB-265 2***
Design Life	***40 Years***
Component Function and Life Cycle Description	***A cycle consists of the following:*** • ***A 10,000 lb canister will be loaded into the vessel and the lid will be closed*** • ***The vessel will fill to the overflow with one-molar nitric acid and Cerium +4 solution.*** • ***The heating coil will raise the temperature of the liquid from 68°F to 149°F.*** • ***Heating and cooling coils will maintain the temperature of the liquid at 149°F for 6 hours.*** • ***The nitric acid solution will be drained from the vessel*** • ***The upper and lower spray rings will rinse the canister with nitric acid and demineralized water*** • ***Flow to the upper spray ring will stop, the lid will open, and the canister will be slowly removed from the vessel while the lower spray ring continues to rinse the canister.***

Load Type		Min	Max	Number of Cycles	Comment
Design Pressure	psig	***N/A***	***N/A***	***N/A***	
Operating Pressure	psig	***Atm***	***Atm***	***29,200***	
Operating Temperature	°F	***48***	***149***	***29,200***	
Contents Specific Gravity		***1.00***	***1.25***	***29,200***	
Contents Level	inch	***Empty***	***Full***	***29,200***	
Localized Features					
Vessel and Supports		***Empty / Full+Canister***		***29,200***	

Notes

Cycle Increase: The Seller must increase the numbers of operational cycles given above by 10% to account for commissioning duty unless otherwise noted.

Note 5: Bar SB348-2 is used for Spray Nozzles PIN 08D & 09D, Rollers and Roller Pins PIN 18C & 18D, Thermowells PIN 38A & 38C, Stabilizer bars PIN 19B, Lid Hold Downs PIN 28B & 31K.

Approval

Rev	Description	System Engr	Vessel Engr	Checked	Reviewed	Approved	Date
0	**Issue for Purchase**	**G. Fenton**	**R. Simmons**	**T. Galioto** **C. Slater**	**D. Yarbrough**	**M. Hoffmann**	**10/29/03**
1	**Issued to incorporate 24590-WTP-SDDR-PROC-04-01079**	**R. Tometczak**	**Paul Polani**	**Steve Crow**	**Jeff Pullen**	**M. Hoffmann**	**1/21/05**
2	**Revised per Note 3 on sheet 1 of 2.**						11/28/05

River Protection Project Waste Treatment Plant	**MECHANICAL DATA SHEET** **ACTIVATED CARBON ADSORBER** ISSUED BY RPP-WTP PDC	R10593033 **PLANT ITEM No.** **24590-HLW-MV-HOP-ADBR-00001A/B** Data Sheet No. / Rev. **24590-HLW-MVD-HOP-00015** / **1**

Project:	**RPP-WTP**	Description:	**Activated Carbon Unit for Mercury Abatement**
Project No:	**24590**	Mech. Drawing:*	
Site:	**Hanford**	P&ID:	**24590-HLW-M6-HOP-00003**
System:	**HOP**	Process Data:	**24590-HLW-M6D-HOP-00001 and calculation 24590-HLW-M6C-HOP-00011**
Process flow diagram:	**24590-HLW-M5-V17T-00004**	Specification:	**24590-WTP-3PS-MWK0-T0001**

General Data

Quality Level	**QL-2**	Design Life yrs	**40** (See Process Note C for media design life requirement)
Seismic Category	**SC-III**		
Design Code	**Note 2**		
Code Stamp	**N/A**		
NB Registration	**N/A**		

Process Data

Inlet Offgas Conditions:

	Conditions		
	Nominal	Max	Design
Vol. Flow ACFM	1559	1984	2000 SCFM @ 68 °F
Mass Flow lb/hr	5492	6347	N/A
Temperature °F	168	205	250
Pressure in-WG	-10.4	-18.1	-82
Density lb/ft³	0.059	0.054	N/A
Relative Humidity %	23.2	18.3	N/A
Allowable Pressure Drop in-WG			12 (Note B)

Gas Composition:

	Nominal (%)	Max (%)	
N_2	70.6	64.7	(By Volume)
O_2	18.9	17.4	(By Volume)
Ar	0.8	0.8	(By Volume)
CO_2	0.4	0.6	(By Volume)
H_2O	9.2	16.4	(By Volume)

	Nominal		Maximum	
	(ppmv)	(mg/m³)	(ppmv)	(mg/m³)
CO	40	34	65	50
NO_X	614	606	2,700	2,600
NH_3	69	36	61	29
SO_2	0.047	0.093	0.032	0.056
HCl	3.8E-03	4.3E-03	0.023	0.023
HF	0.22	0.14	1.8	0.99
I_2	2.9E-09	2.3E-08	1.3E-04	8.9E-04
SVOC	5.6	22	0.45	1.6
VOC	9.7E-08	2.3E-07	0.22	0.47
Particulate	2.9E-10	2.2E-10	7.3E-10	7.9E-10

Mercury Concentration:

	Nominal	Design
	(µg/dscm)	(µg/dscm)
Hg	5100	42000

Decontamination Factor (DF) for Hg 1000

Min Carbon Change Out Frequency months 12 (Note C) At nominal values

Process Notes:

A. Carbon beds shall be operated in series during normal operation.

B. Allowable pressure drop is for both carbon beds HOP-ADBR-00001A and B operating in series. (12 in-WG total)

C. Design life of activated carbon media shall be for one year at nominal concentrations of Mercury with the beds operating in series.

D. Equipment design pressure (Positive) shall be determined by Seller based on pressures generated during a carbon bed fire and activation of the fire suppression water.

Rev.	Reason for Revision	System Engineer / Process Engineer	Equipment Engineer	Checked	Approved	Date
1	Revised to comply with CODE 1 vendor Submittal (24590-QL-POA-MWK0-00001-09-00001), in accordance with CAR: 24590-WTP-CAR-QA-05-120. Added Environmental Qualification.					12/6/05
0	Issued for Purchase	J. Rouse	D. Pease	C. Morley	M. Hoffmann	9-20-04

River Protection Project Waste Treatment Plant	**MECHANICAL DATA SHEET** **ACTIVATED CARBON ADSORBER**	**PLANT ITEM No.** **24590-HLW-MV-HOP-ADBR-00001A/B**
		Data Sheet No. / **Rev.**
		24590-HLW-MVD-HOP-00015 / **1**

Material Data:

Process Pipe and Housing Fabrication -			
Pipe Class	S11V	Valve Material	316/316L SS
Inlet Piping Size	14 inches	Valve Trim	TRIM 12, API 600
Outlet Piping Size	14 inches	Flange Material	316L SS
Housing	316L SS	Gasket Material	Spiral-Wound/Flat, Graphite
Activated Carbon Beds Screens	316L SS	Flange Rating	CL 150 RF B16.5
Pipe schedule	TBD	Housing Insulation / Jacket	Calcium Silicate ASTM C533, Type I / 0.024" thk. SST ASTM A240
Pipe Material	316L SS	Pipe Insulation / Jacket	Calcium Silicate ASTM C533, Type I / 0.024" thk. SST ASTM A240
Fire Protection Pipe -			
Pipe Class	TBD	Valve Trim	TBD
Inlet Piping Size	* 2 inches	Flange Material	TBD
Pipe schedule	TBD	Gasket Material	TBD
Pipe Material	TBD	Flange Rating	TBD
Valve Material	TBD		

Appurtenances and Other items -			
Support Frames	Carbon Steel	Fire Suppression Drain Pipe Material	TBD
Pipe Supports	Carbon Steel	Fire Suppression Drain Pipe Sch.	TBD
Maintenance Platforms	Carbon Steel	Drain Line on/off valve	TBD
Flange Bolts / Nuts	ASTM F593 / ASTM F594	Drain Line Flange Material	TBD
		Drain Line Flange Rating	TBD

Bed Fire Suppression System:

Fluid Type	Water	Full Flood Fire Suppression:		
Activation Method:		Flowrate	* 22	gpm
Temperature Y/N	No	Pressure	* 50	psig
Smoke Y/N	No	Total Volume of Water	* 5400	gal
Instrument Signal Y/N	Yes	Total Time to Fill Vessel	* 240	minutes
Instrument Type	Differential CO Monitor	Drain Pipe Line Size	* 2 inches	

Design Data:

Nozzle Loads at Buyer Interface -

	F_X(lbs)	F_Y (lbs)	F_Z (lbs)	M_X (ft-lbs)	M_Y (ft-lbs)	M_Z (ft-lbs)	
Weight	200	1750	200	5250	2500	2500	
Thermal	2500	2500	3500	30000	30000	30000	
Seismic	5750	4500	8000	50000	50000	50000	
Total	8450	8750	11700	85250	82500	82500	

Thermal Information -

Room Temperature	83	°F	Maximum Heat Loss	5 ⚠ Kw (per unit)
Earth Temperature Beneath Slab	70	°F (Fixed)	Thermal Cycling Frequency:	For design purposes use a thermal cycle frequency of once every two (2) months for the life of the plant (40 years).
Concrete Slab Base Thickness	72	Inches		
Thermal Conductivity of Concrete Slab	1.8	W / m / K		

Environmental Qualification -⚠

Room #⚠	H-A123 ⚠	Radiation (mrads/hr) ⚠	2.5 ⚠
Environmental Conditions⚠	Mild ⚠	Flooding ⚠	Water Spray⚠
Temperature: ⚠		Chemical Spray ⚠	No ⚠
Normal (°F)⚠	59 - 95 ⚠	Plant Induced Vibration ⚠	No ⚠
Accident (°F)⚠	130 ⚠	Function post DBE ⚠	No ⚠
Pressure (atm) ⚠	1.05 ⚠	Operating time post DBE ⚠	N/A ⚠
Relative Humidity ⚠	1 - 100% ⚠		

Note: EQ requirement are applicable to electrical components pertaining to the carbon units. The carbon units are all metallic construction and not subject to EQ.

River Protection Project Waste Treatment Plant	MECHANICAL DATA SHEET ACTIVATED CARBON ADSORBER	PLANT ITEM No. 24590-HLW-MV-HOP-ADBR-00001A/B	
		Data Sheet No.	Rev.
		24590-HLW-MVD-HOP-00015	1

Activated Carbon Data -	Primary Bed	Guard Bed (if included)
Manufacturer	* Donau Carbon	* Donau Carbon
Type of carbon (charcoal, coconut shell, etc.)	* Kombisorbon BAT-37	* Desomix ZA-37 ⚠
Activation element (sulfur)	* Sulfur compounds ⚠	* Unimpregnated activated charcoal⚠
Carbon media form (granular, pellet, etc.)	* Granular	* Granular ⚠
Size of carbon media (mm)	* 3-5	* 3-5
Bulk density	* 0.57 g/cc (36 lb/ft^3) ⚠	* 0.57 g/cc (36 lb/ft^3) ⚠
Load efficiency	* 17%	* 17%
Number of beds per vessel	* two	* two
Arrangement	* Rectangular parallel beds	* Rectangular parallel beds
Residence time, sec	* 6 (at design flow rate in SCFM) ⚠	* 3 (at design flow rate in SCFM) ⚠
Thickness of bed, in	* 20	* 10
Total volume of carbon, ft^3 per vessel ⚠	* 220 ⚠	* 110 ⚠
Total weight of carbon, lbs per vessel ⚠	* 7920 ⚠	* 3960 ⚠
Spacing between beds, in	* 4	* 4 and 8
Face velocity thru carbon, fpm	* 16.67 (at design flowrate in SCFM) ⚠	* 16.67 (at design flowrate in SCFM) ⚠
Max. allowable temp, °F	* 284	* 284
Min. allowable temp, °F	* Ambient	* Ambient
House/vessel -		
Material/Thickness	* 3/8" stainless steel with external stiffeners ⚠	
Vessel dimensions, (L x W x H)	* 138" x 112" x 156" ⚠	
Total weight of vessel	* est. 22,670 lbs per vessel ⚠	
Weight of vessel with carbon, lbs	* 34,550 lbs ⚠	
Design pressure, in-WG	* -82 in-WG (Refer to Process Note D, positive design pressure 126 in-WG) ⚠	
Operating pressure, in-WG	* -18.1 in-WG ⚠	
Design temperature, °F	* 250 ⚠	
Recommended housing insulation:	* Calcium silicate and/or foam glass	
Material/Thickness, in	* 7 inches on sides, 1 inch over stiffeners ⚠	
Thermal Cond, Btu-in/hr ft^2 °F	* 0.39	
Method of Attachment	* Mechanical support via outer jacket and/or straps	
Unloading on/off valve	* 8 each per vessel, each 8" size (4 ea. for Primary Bed) ⚠	
Discharge Filter -		
Manufacturer	* American Air filter	
Type of filter	* Extended surface mini-pleat with metal sides	
Filter material	* microglass paper ⚠	
Filter frame material	* stainless steel type 316 ⚠	
Dimensions of filter, (L x W x H)	* 23-3/8" x 23-3/8" x 3-3/4" ⚠	
Weight of filter, lbs	* 15 lbs ⚠	
Number of filters per vessel	* 2	
Filter rating (efficiency, particle size)	* 99% on 5 micron particles	
Flowrate capacity, scfm	* 2000 per filter	
Max. allowable temp, °F	* 250 ⚠	
Min. allowable temp, °F	* Ambient	

Connecting Pipe -	
Pipe size, in	* 14
Material/Thickness, in	* 0.25 ⚠
Total length of piping, ft	* 70 ⚠
Valve type, (gate, butterfly, etc.)	* butterfly
Weight of valve, lbs	* 143 ⚠
Valve manufacturer	* Centerline Valves ⚠
Total number of valves	* 6
Actuators (air operated, rack and pinion, FC)	* Pneumatic, rack & pinion, Fail closed ⚠
Actuator manufacture	* Hi-Tork ⚠
Weight of actuator	* 50 lbs
Actuator operating pressure (min. and max.)	* 80-150 ⚠
Opening time, seconds	* less than 10 seconds ⚠
Total number of Actuators	* 6 per ACA unit
Required instrument air supply, scfm	* 2 SCFM/actuator ⚠
Recommended piping insulation:	* Calcium silicate or foam glass
Material/Thickness, in	* 1 inches ⚠
Thermal Cond, Btu-in/hr ft^2 °F	* 0.39
Method of Attachment	* strapes
Pneumatic Loading Equipment -	
Manufacturer	* N/A
Blower size, horsepower	* N/A
Blower electrical load, watts	* N/A
Required voltage for blower	* N/A
Skid envelope size, (L x W x H)	* N/A
Skid weight, lbs	* N/A
Skid transportation/mobility	* N/A
Estimated time to load the vessel	* N/A
Optional Electric Pre-Heater -	
Manufacturer	* N/A
Heater element electric load, watts	* N/A
Required voltage for heater elements, V	* N/A
Fan electric load, watts	* N/A
Required voltage for fan, V	* N/A
Fan size, horsepower	* N/A
Skid envelope size, (L x W x H)	* N/A
Skid weight, lbs	* N/A
Skid transportation/mobility	* N/A
Estimated time to preheat the carbon, hrs	* N/A
Total electric load for skid, watts	* N/A
Total required voltage	* N/A

Note:
System designed to permit loading directly from bulk bags or drums into beds without the need for pneumatic loading devices.

Note:
Electrical Pre-Heater no longer proposed - considered unnecessary.

Construction Data: *(To be determined by the supplier when not specified by the buyer)*

Envelope Dimensions, (L x W x H) ft	(25 x 11 x 31)	Shipping Dimensions, (L x W x H) ft	* 3 trailers, each load (15 x 10 x 9) ft
Operating Weight of unit (two vessels), lbs	* 69,100 ⚠	Shipping Weight lbs	* 71,500 ⚠
Full Water Flood Weight of unit (two vessels), lbs	* 114,100 ⚠		

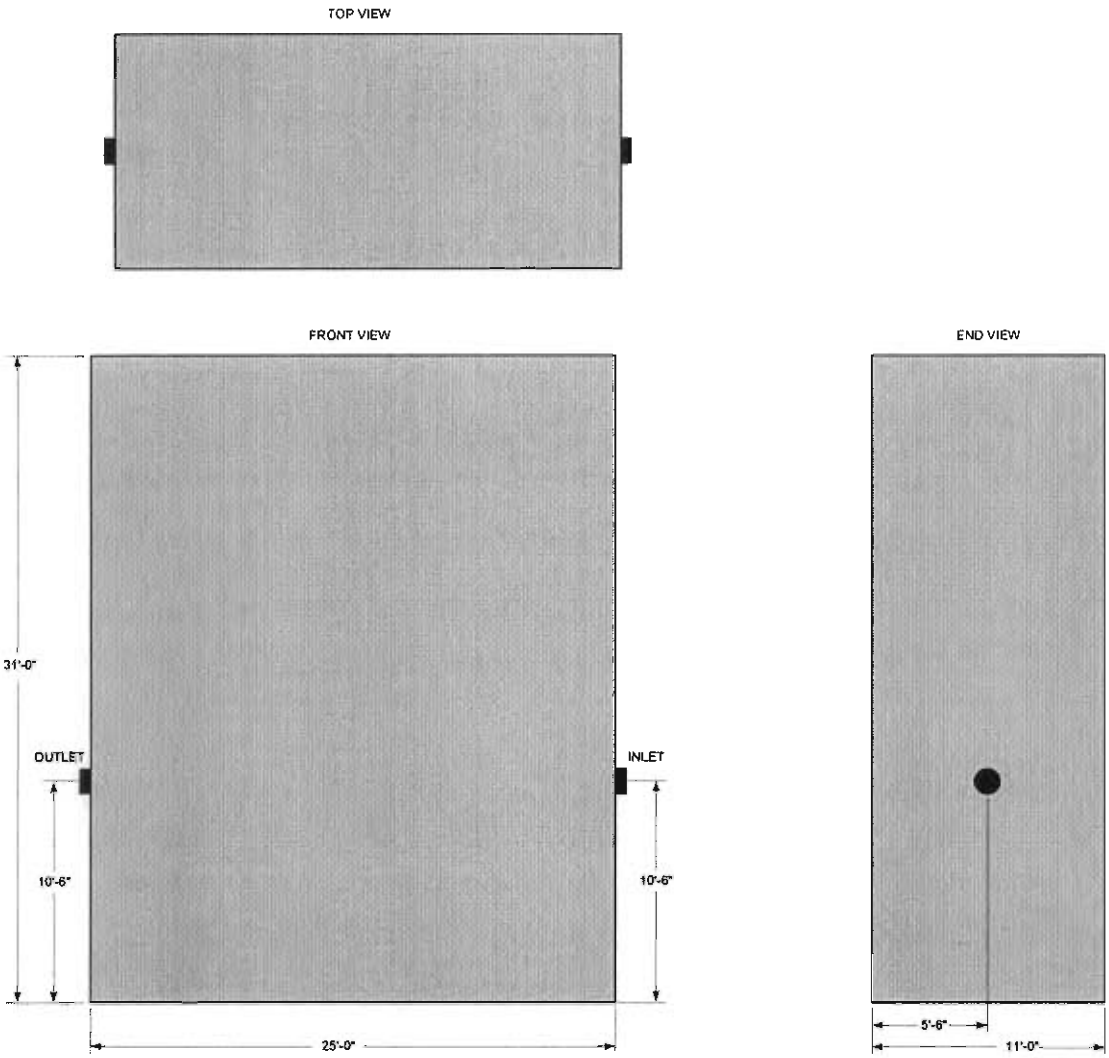

Layout Notes:

- Process Inlet and Outlet nozzles are shown for clarity. Other nozzle locations will be per Seller.
- Carbon bed, piping, support frame, and maintenance platform layout shall be per Seller meeting the requirements of engineering specification 24590-WTP-3PS-MWK0-T0001.
- Pneumatic loading system shall be located per Seller's design.

General Notes

1. ***Data marked with an asterisk to be provided by Vendor.***
2. ***The adsorber housing pressure boundary is designed and fabricated to ASME BPVC, Sec VIII, Div 1, the adsorbers and fire protection system are designed and fabricated to applicable ASME AG-1 requirements and the interconnect piping and valves are designed and fabricated to ASME B31.3 - 1996. The packaged unit is tested to ASME AG-1 with ASME AG-1a-2000 Addenda, and the pressure boundary pneumatically tested per ASME BPVC, Sec VIII, Div I.***
3. ***Contents of this document are Dangerous Waste Permit affecting.***

River Protection Project Waste Treatment Plant	**MECHANICAL DATA SHEET** **ACTIVATED CARBON ADSORBER** ISSUED BY RPP-WTP PDC	**PLANT ITEM No.** R10593034 **24590-HLW-MV-HOP-ADBR-00002A/B** Data Sheet No. / Rev. **24590-HLW-MVD-HOP-00016** / **1**

Project:	**RPP-WTP**	Description:	**Activated Carbon Unit for Mercury Abatement**
Project No:	**24590**	Mech. Drawing:*	
Site:	**Hanford**	P&ID:	**24590-HLW-M6-HOP-20003**
System:	**HOP**	Process Data:	**24590-HLW-M6D-HOP-00001 and calculation 24590-HLW-M6C-HOP-00011**
Process flow diagram:	**24590-HLW-M5-V17T-20004**	Specification:	**24590-WTP-3PS-MWK0-T0001**

General Data

Quality Level	**QL-2**	Design Life yrs	**40** (See Process Note C for media design life requirement)
Seismic Category	**SC-III**		
Design Code	**Note 2**		
Code Stamp	**N/A**		
NB Registration	**N/A**		

Process Data

Inlet Offgas Conditions:

	Conditions		
	Nominal	Max	Design
Vol. Flow ACFM	1559	1984	2000 SCFM @ 68 °F
Mass Flow lb/hr	5492	6347	N/A
Temperature °F	168	205	250
Pressure in-WG	-10.4	-18.1	-82
Density lb/ft³	0.059	0.054	N/A
Relative Humidity %	23.2	18.3	N/A
Allowable Pressure Drop in-WG			12 (Note B)

Gas Composition:

	Nominal (%)	Max (%)	
N_2	70.6	64.7	(By Volume)
O_2	18.9	17.4	(By Volume)
Ar	0.8	0.8	(By Volume)
CO_2	0.4	0.6	(By Volume)
H_2O	9.2	16.4	(By Volume)

	Nominal		Maximum	
	(ppmv)	(mg/m³)	(ppmv)	(mg/m³)
CO	40	34	65	50
NO_X	614	606	2,700	2,600
NH_3	69	36	61	29
SO_2	0.047	0.093	0.032	0.056
HCl	3.8E-03	4.3E-03	0.023	0.023
HF	0.22	0.14	1.8	0.99
I_2	2.9E-09	2.3E-08	1.3E-04	8.9E-04
SVOC	5.6	22	0.45	1.6
VOC	9.7E-08	2.3E-07	0.22	0.47
Particulate	2.9E-10	2.2E-10	7.3E-10	7.9E-10

Mercury Concentration:

	Nominal	Design
	(µg/dscm)	(µg/dscm)
Hg	5100	42000

Decontamination Factor (DF) for Hg 1000

Min Carbon Change Out Frequency months 12 (Note C) At nominal values

Process Notes:

A. Carbon beds shall be operated in series during normal operation.

B. Allowable pressure drop is for both carbon beds HOP-ADBR-00001A and B operating in series. (12 in-WG total)

C. Design life of activated carbon media shall be for one year at nominal concentrations of Mercury with the beds operating in series.

D. Equipment design pressure (Positive) shall be determined by Seller based on pressures generated during a carbon bed fire and activation of the fire suppression water.

Rev.	Reason for Revision	System Engineer / Process Engineer	Equipment Engineer	Checked	Approved	Date
1	Revised to comply with CODE 1 vendor Submittal (24590-QL-POA-MWK0-00001-09-00001), in accordance with CAR: 24590-WTP-CAR-QA-05-120. Added Environmental Qualification.					12/6/05
0	Issued for Purchase	J. Rouse	D. Pease	C. Morley	M. Hoffmann	9-20-04

River Protection Project Waste Treatment Plant	**MECHANICAL DATA SHEET** **ACTIVATED CARBON ADSORBER**	**PLANT ITEM No.** **24590-HLW-MV-HOP-ADBR-00002A/B**	
		Data Sheet No.	**Rev.**
		24590-HLW-MVD-HOP-00016	**1**

Material Data:

Process Pipe and Housing Fabrication -			
Pipe Class	S11V	Valve Material	316/316L SS
Inlet Piping Size	14 inches	Valve Trim	TRIM 12, API 600
Outlet Piping Size	14 inches	Flange Material	316L SS
Housing	316L SS	Gasket Material	Spiral-Wound/Flat, Graphite
Activated Carbon Beds Screens	316L SS	Flange Rating	CL 150 RF B16.5
Pipe schedule	TBD	Housing Insulation / Jacket	Calcium Silicate ASTM C533, Type I / 0.024" thk. SST ASTM A240
Pipe Material	316L SS	Pipe Insulation / Jacket	Calcium Silicate ASTM C533, Type I / 0.024" thk. SST ASTM A240
Fire Protection Pipe -			
Pipe Class	TBD	Valve Trim	TBD
Inlet Piping Size	* 2 inches	Flange Material	TBD
Pipe schedule	TBD	Gasket Material	TBD
Pipe Material	TBD	Flange Rating	TBD
Valve Material	TBD		

Appurtenances and Other items -			
Support Frames	Carbon Steel	Fire Suppression Drain Pipe Material	TBD
Pipe Supports	Carbon Steel	Fire Suppression Drain Pipe Sch.	TBD
Maintenance Platforms	Carbon Steel	Drain Line on/off valve	TBD
Flange Bolts / Nuts	ASTM F593 / ASTM F594	Drain Line Flange Material	TBD
		Drain Line Flange Rating	TBD

Bed Fire Suppression System:

Fluid Type	Water	Full Flood Fire Suppression:		
Activation Method:		Flowrate	* 22	gpm
Temperature Y/N	No	Pressure	* 50	psig
Smoke Y/N	No	Total Volume of Water	* 5400	gal
Instrument Signal Y/N	Yes	Total Time to Fill Vessel	* 240	minutes
Instrument Type	Differential CO Monitor	Drain Pipe Line Size	* 2 inches	

Design Data:

Nozzle Loads at Buyer Interface -

	F_X(lbs)	F_Y (lbs)	F_Z (lbs)	M_X (ft-lbs)	M_Y (ft-lbs)	M_Z (ft-lbs)	
Weight	200	1750	200	5250	2500	2500	
Thermal	2500	2500	3500	30000	30000	30000	
Seismic	5750	4500	8000	50000	50000	50000	
Total	8450	8750	11700	85250	82500	82500	

Thermal Information -

Room Temperature	83	°F	Maximum Heat Loss	5 ⚠	Kw (per unit)
Earth Temperature Beneath Slab	70	°F (Fixed)	Thermal Cycling Frequency:	For design purposes use a thermal cycle frequency of once every two (2) months for the life of the plant (40 years).	
Concrete Slab Base Thickness	72	Inches			
Thermal Conductivity of Concrete Slab	1.8	W / m / K			

Environmental Qualification - ⚠

Room # ⚠	H-A123 ⚠	Radiation (mrads/hr) ⚠	2.5 ⚠
Environmental Conditions ⚠	Mild ⚠	Flooding ⚠	Water Spray ⚠
Temperature: ⚠		Chemical Spray ⚠	No ⚠
Normal (°F) ⚠	59 - 95 ⚠	Plant Induced Vibration ⚠	No ⚠
Accident (°F) ⚠	130 ⚠	Function post DBE ⚠	No ⚠
Pressure (atm) ⚠	1.05 ⚠	Operating time post DBE ⚠	N/A ⚠
Relative Humidity ⚠	1 - 100% ⚠		

Note: EQ requirement are applicable to electrical components pertaining to the carbon units. The carbon units are all metallic construction and not subject to EQ.

River Protection Project Waste Treatment Plant	**MECHANICAL DATA SHEET** **ACTIVATED CARBON ADSORBER**	**PLANT ITEM No.** **24590-HLW-MV-HOP-ADBR-00002A/B**	
		Data Sheet No.	**Rev.**
		24590-HLW-MVD-HOP-00016	**1**

Activated Carbon Data -	Primary Bed	Guard Bed (if included)
Manufacturer	* Donau Carbon	* Donau Carbon
Type of carbon (charcoal, coconut shell, etc.)	* Kombisorbon BAT-37	* Desomix ZA-37 ⚠
Activation element (sulfur)	* Sulfur compounds ⚠	* Unimpregnated activated charcoal ⚠
Carbon media form (granular, pellet, etc.)	* Granular	* Granular ⚠
Size of carbon media (mm)	* 3-5	* 3-5
Bulk density	* 0.57 g/cc (36 lb/ft^3) ⚠	* 0.57 g/cc (36 lb/ft^3) ⚠
Load efficiency	* 17%	* 17%
Number of beds per vessel	* two	* two
Arrangement	* Rectangular parallel beds	* Rectangular parallel beds
Residence time, sec	* 6 (at design flow rate in SCFM) ⚠	* 3 (at design flow rate in SCFM) ⚠
Thickness of bed, in	* 20	* 10
Total volume of carbon, ft^3 per vessel ⚠	* 220 ⚠	* 110 ⚠
Total weight of carbon, lbs per vessel ⚠	* 7920 ⚠	* 3960 ⚠
Spacing between beds, in	* 4	* 4 and 8
Face velocity thru carbon, fpm	* 16.67 (at design flowrate in SCFM) ⚠	* 16.67 (at design flowrate in SCFM) ⚠
Max. allowable temp, °F	* 284	* 284
Min. allowable temp, °F	* Ambient	* Ambient
House/vessel -		
Material/Thickness	* 3/8" stainless steel with external stiffeners ⚠	
Vessel dimensions, (L x W x H)	* 138" x 112" x 156" ⚠	
Total weight of vessel	* est. 22,670 lbs per vessel ⚠	
Weight of vessel with carbon, lbs	* 34,550 lbs ⚠	
Design pressure, in-WG	* -82 in-WG (Refer to Process Note D, positive design pressure 126 in-WG) ⚠	
Operating pressure, in-WG	* -18.1 in-WG ⚠	
Design temperature, °F	* 250 ⚠	
Recommended housing insulation:	* Calcium silicate and/or foam glass	
Material/Thickness, in	* 7 inches on sides, 1 inch over stiffeners ⚠	
Thermal Cond, Btu-in/hr ft^2 °F	* 0.39	
Method of Attachment	* Mechanical support via outer jacket and/or straps	
Unloading on/off valve	* 8 each per vessel, each 8" size (4 ea. for Primary Bed) ⚠	
Discharge Filter -		
Manufacturer	* American Air filter	
Type of filter	* Extended surface mini-pleat with metal sides	
Filter material	* microglass paper ⚠	
Filter frame material	* stainless steel type 316 ⚠	
Dimensions of filter, (L x W x H)	* 23-3/8" x 23-3/8" x 3-3/4" ⚠	
Weight of filter, lbs	* 15 lbs ⚠	
Number of filters per vessel	* 2	
Filter rating (efficiency, particle size)	* 99% on 5 micron particles	
Flowrate capacity, scfm	* 2000 per filter	
Max. allowable temp, °F	* 250 ⚠	
Min. allowable temp, °F	* Ambient	

Connecting Pipe -	
Pipe size, in	* 14
Material/Thickness, in	* 0.25 ⚠
Total length of piping, ft	* 70 ⚠
Valve type, (gate, butterfly, etc.)	* butterfly
Weight of valve, lbs	* 143 ⚠
Valve manufacturer	* Centerline Valves ⚠
Total number of valves	* 6
Actuators (air operated, rack and pinion, FC)	* Pneumatic, rack & pinion, Fail closed ⚠
Actuator manufacture	* Hi-Tork ⚠
Weight of actuator	* 50 lbs
Actuator operating pressure (min. and max.)	* 80-150 ⚠
Opening time, seconds	* less than 10 seconds ⚠
Total number of Actuators	* 6 per ACA unit
Required instrument air supply, scfm	* 2 SCFM/actuator ⚠
Recommended piping insulation:	* Calcium silicate or foam glass
Material/Thickness, in	* 1 inches ⚠
Thermal Cond, Btu-in/hr ft^2 °F	* 0.39
Method of Attachment	* strapes
Pneumatic Loading Equipment -	
Manufacturer	* N/A
Blower size, horsepower	* N/A
Blower electrical load, watts	* N/A
Required voltage for blower	* N/A
Skid envelope size, (L x W x H)	* N/A
Skid weight, lbs	* N/A
Skid transportation/mobility	* N/A
Estimated time to load the vessel	* N/A
Optional Electric Pre-Heater -	
Manufacturer	* N/A
Heater element electric load, watts	* N/A
Required voltage for heater elements, V	* N/A
Fan electric load, watts	* N/A
Required voltage for fan, V	* N/A
Fan size, horsepower	* N/A
Skid envelope size, (L x W x H)	* N/A
Skid weight, lbs	* N/A
Skid transportation/mobility	* N/A
Estimated time to preheat the carbon, hrs	* N/A
Total electric load for skid, watts	* N/A
Total required voltage	* N/A

Note:
System designed to permit loading directly from bulk bags or drums into beds without the need for pneumatic loading devices.

Note:
Electrical Pre-Heater no longer proposed - considered unnecessary.

Construction Data: *(To be determined by the supplier when not specified by the buyer)*

Envelope Dimensions, (L x W x H) ft	(25 x 11 x 31)	Shipping Dimensions, (L x W x H) ft	* 3 trailers, each load (15 x 10 x 9) ft
Operating Weight of unit (two vessels), lbs	* 69,100 ⚠	Shipping Weight lbs	* 71,500 ⚠
Full Water Flood Weight of unit (two vessels), lbs	* 114,100 ⚠		

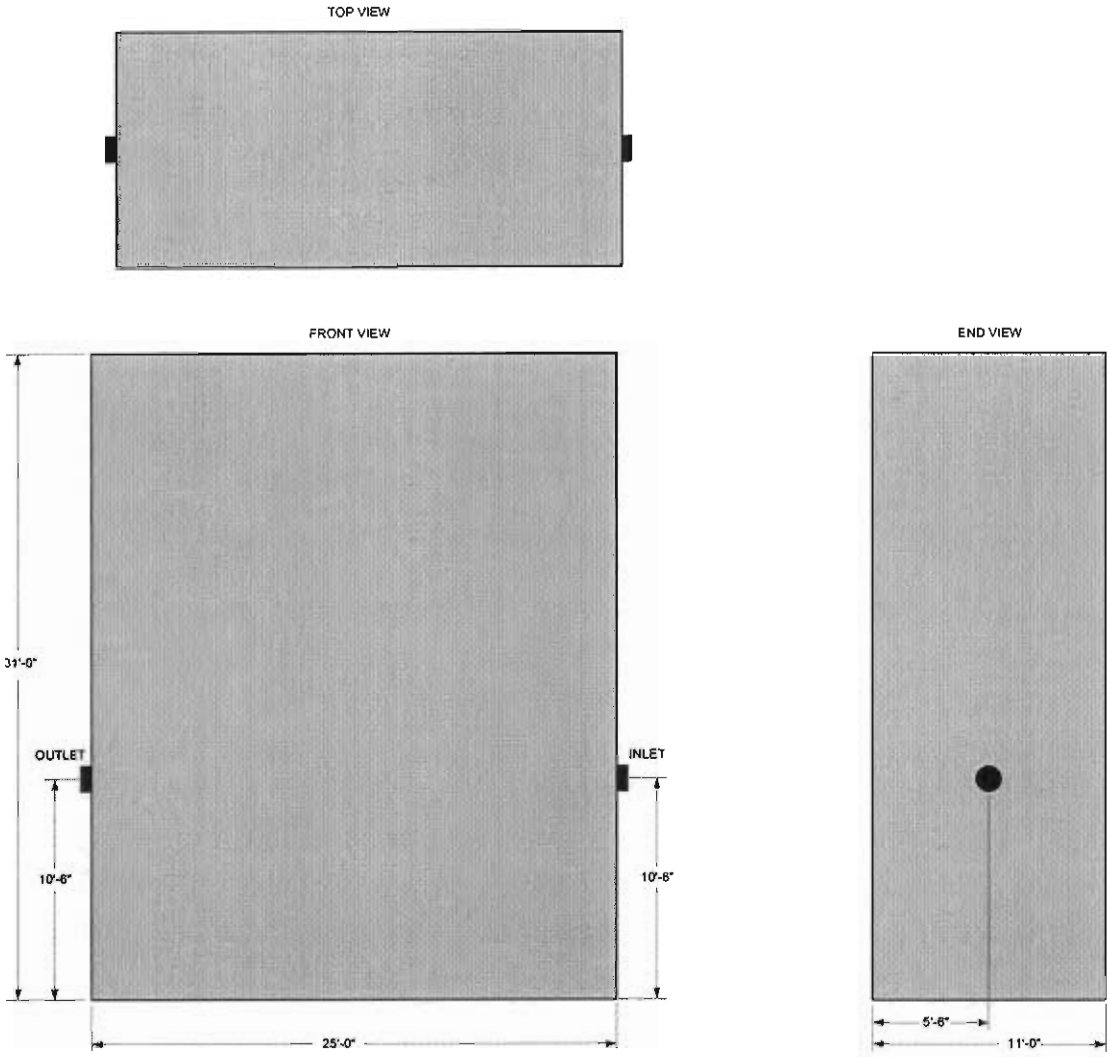

Layout Notes:

- Process Inlet and Outlet nozzles are shown for clarity. Other nozzle locations will be per Seller.
- Carbon bed, piping, support frame, and maintenance platform layout shall be per Seller meeting the requirements of engineering specification 24590-WTP-3PS-MWK0-T0001.
- Pneumatic loading system shall be located per Seller's design.

General Notes

1. ***Data marked with an asterisk to be provided by Vendor.***
2. ***The adsorber housing pressure boundary is designed and fabricated to ASME BPVC, Sec VIII, Div 1, the adsorbers and fire protection system are designed and fabricated to applicable ASME AG-1 requirements and the interconnect piping and valves are designed and fabricated to ASME B31.3 - 1996. The packaged unit is tested to ASME AG-1 with ASME AG-1a-2000 Addenda, and the pressure boundary pneumatically tested per ASME BPVC, Sec VIII, Div I.***
3. ***Contents of this document are Dangerous Waste Permit affecting.***

MECHANICAL SYSTEMS DATA SHEET: VESSEL

PLANT ITEM No.
24590-HLW-MV-HOP-VSL-00903

R1050706

Project:	RPP-WTP	P&ID:	24590-HLW-M6-HOP-P0006 & 24590-HLW-M6-HOP-P0004
Project No:	24590	Process Data Sheet:	Deleted 2
Project Site:	Hanford	Vessel Drawing	24590-HLW-MV-HOP-P0001
Description:	SBS Condensate Receiver Vessel 2		

ISSUED BY RPP-WTP PDC

Reference Data

Charge Vessels (Plant Item Numbers)	HOP-VSL-00004A/B, HOP-VSL-00101A/B
Pulsejet Mixers / Agitators (Plant Item Numbers)	HOP-PJM-00001, HOP-PJM-00002, HOP-PJM-00003, HOP-PJM-00007
RFD(s)/Pump(s) (Plant Item Numbers)	HOP-RFD-00001A/B, HOP-RFD-00002A/B

Design Data

Quality Level	QL-2 2	Fabrication Specs	24590-WTP-3PS-MV00-TP001 2		
Seismic Category	SC-III 2	Design Code	ASME VIII Div 1		
Service/Contents	Liquid Acidic Condensate	Code Stamp	Yes		
Design Specific Gravity	1.098	NB Registration	Yes		
Operating Volume gal	8199 (Note 5)	Weights (lbs)	Empty	Operating	Test
Total Volume gal	9891 (Note 5)	Estimated	37,900	111,000	121,000
		Actual *	42,810 2	116,070 2	134,470 2

Inside Diameter	inch	144			Wind Design	N/A	
Length/Height (TL-TL)	inch	93			Snow Design	N/A	
		Vessel Operating	Vessel Design	Coil/Jacket Design	Seismic Design	24590-WTP-3PS-SS90-T0001 24590-WTP-3PS-MV00-TP002	
Internal Pressure	psig	Atm	15	65	Seismic Base Moment *	ft*lb	
External Pressure	psig	1.8	FV	FV	Postweld Heat Treat	Not Required	
Temperature	°F	122	165	165	Corrosion Allowance	Inch	0.08 Shell / 0.04 Jacket
Min. Design Metal Temp.	°F	40			Hydrostatic Test Pressure *	Psig	

Note: Please note that source, special nuclear and byproduct materials, as defined in the Atomic Energy Act of 1954 (AEA), are regulated at the U.S. Department of Energy (DOE) facilities exclusively by DOE acting pursuant to its AEA authority. DOE asserts, that pursuant to the source, special nuclear, and byproduct materials at DOE-owned nuclear facilities. Information contained herein on radionuclides is provided for process description purposes only.

MARK W. HOFFMANN
STATE OF WASHINGTON
0030952
REGISTERED
PROFESSIONAL ENGINEER
4/7/05
EXPIRES 12/10/06

This Bound Document Contains a total of 8 Sheets.

REV	DATE	REASON FOR REVISION	PREPARER	CHECKER	REVIEWER	APPROVER
2	4/7/05	Issued for Permitting Use				
1	6/4/03	Issued for Permitting Use	J. Jackson	S. Lee	C.Slater	M. Hoffmann
0	9/19/02	Issued for Permitting Use	J. Jackson	C. Slater	N/A	S. Kirk

BECHTEL	**MECHANICAL SYSTEMS DATA SHEET: VESSEL**	**PLANT ITEM No.** ***24590-HLW-MV-HOP-VSL-00903***

Materials of Construction

Component	Material	Minimum Thickness / Size	Containment
Top Head	***SB-575 N06022***	***See drawing***	***Auxiliary (Note 1)*** 2
Shell	***SB-575 N06022***	***See drawing***	***Primary (Note 1)*** 2
Bottom Head	***SB-575 N06022***	***See drawing***	***Primary (Note 1)*** 2
Support	***SA-240 304L***	***See drawing***	***N/A (100% RT long seams)***
Jacket/Coils/Half-Pipe Jacket	***SA-240 316L***	***See drawing***	***N/A*** 2
Internals (incl. nozzle necks)	***SB-575 N06022 / SB-622 N06022***	***See drawing***	***Thermocouples Primary (Note 1)*** 2
Pipe (Internal / Jacket)	***SB-622 N06022 / SA-312 TP316L***	***See drawing***	***Note 1***
Forgings/ Bar stock (Vessel / Jacket)	***SB-564 N06022 / SA-182 F316L***		***Note 1*** 2
Gaskets	***None***		***N/A*** 2
Bolting	***None***		***N/A*** 2

Miscellaneous Data

Orientation	***Vertical***	Support Type	***Skirt***
Insulation Function	***None***	Insulation Material	***N/A***
Insulation Thickness (inch)	***N/A***	Internal Finish	***Note 2*** 2
		External Finish	***Note 2*** 2

Remarks

**** To be determined by the vendor.***

Note 1: All welds forming part of the primary and auxiliary containments, including the nozzle attachment welds shall be subjected to 100% volumetric examination. Radiography is the preferred method of volumetric testing. If it is considered impractical to perform radiographic examination, the Seller may propose ultrasonic examination. 2

Note 2: All welds descaled, as-laid 2

Note 3: Normal Operating Temperature is 122 °F, Maximum Temperature is 140 °F.

Note 4: Deleted 2

Note 5: Vessel volumes are approximate and do not account for manufacturing tolerances, nozzles, and displacement of internals. 2

Note 6: Deleted. 2

Note 7: Contents of this document are Dangerous Waste Permit affecting. 2

Note 8: This vessel is located in a Black Cell. 2

Note 9: The summary of the hydrodynamic forces for the fatigue case are as follows: 2

Summary of Hydrodynamic Forces for Normal PJM Operation (Fatigue) Case: 2

The peak loads given below are calculated based on velocity time histories generated using the CFD model of the SBSCV vessel for PJM drive flow of about 8 m/s. Force time histories were developed (e.g. see Figure 1) but the results given below are peak force summaries only.

1) Radial Direction - Peak Forces on Piping (Sch 40) below PJM Nozzle Level:

Pipe Diameter	Peak Positive Force/length	Peak Negative Force/length
inches	lbf/ft	lbf/ft
6	50	40
4	23	18
2	7	5
1	3	3

2) Radial Direction - Peak Forces on Piping (Sch 40) above PJM Nozzle Level:

Pipe Diameter	Peak Positive Force/length	Peak Negative Force/length
inches	lbf/ft	lbf/ft
6	3.0	1.0
4	1.5	0.5
2	0.4	0.2
1	0.1	0.1

3) Radial Direction - Charge Vessel Peak Force = 150 lbf

4) Radial Direction - PJM Peak Force = 200 lbf

5) Axial (Vertical) Direction - Charge Vessel Peak Force = 70 lbf

6) Axial (Vertical) Direction - PJM Peak Force = 70 lbf

7) Axial (Vertical) Direction – Peak Forces on Horizontal Piping (Sch 40)

Pipe Diameter	Peak Positive Force/length	Peak Negative Force/length
inches	lbf/ft	lbf/ft
6	28	6
4	13	4
2	4	1
1	1	0

Figure 1: Total Drag Loads per PJM Cycle at Monitor Point 20 Below PJM Nozzle Level - Radial Direction 2

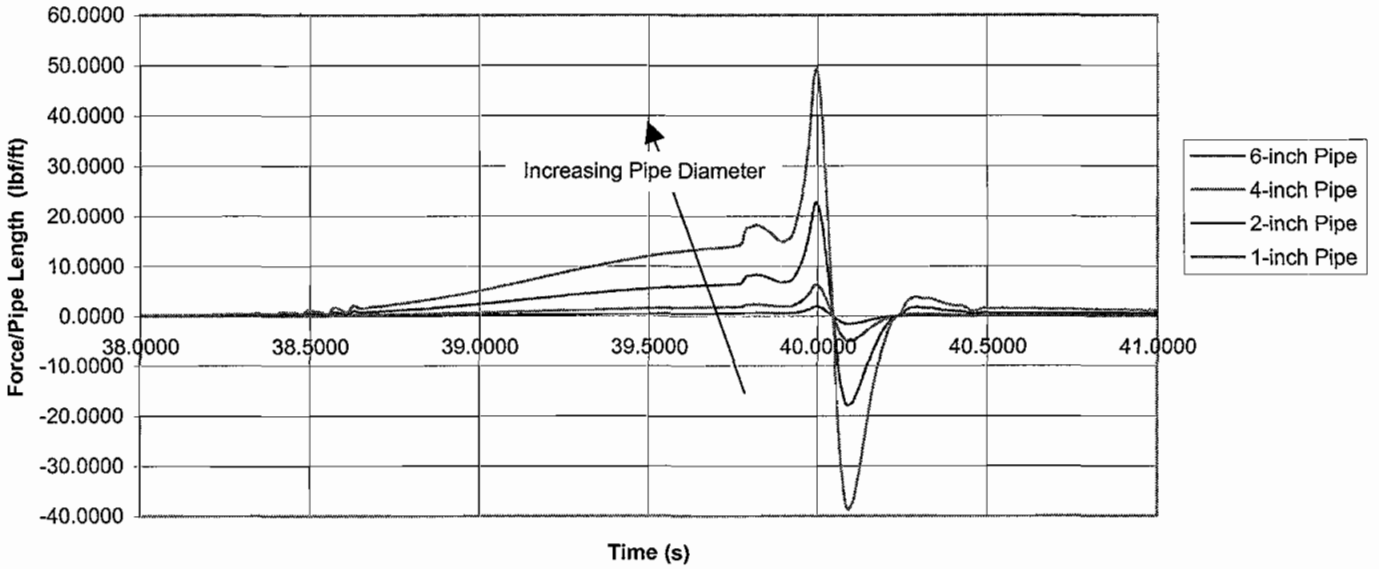

Note 10: The Hydrodynamic loads given in Note 9 are bounding loads. 2
Note 11: This Vessel was procured as Quality Level 1 and Seismic Category I. 2
Note 12: The changes implemented by Revision 2 of this data sheet are for BNI use only. 2

1	**EQUIPMENT CYCLIC DATA SHEET**			
2	Plant Item Number:	24590-HLW-MV-HOP-VSL-00903		
3	Plant Item Description	SBS Condensate Receiver Vessel		
4	Component	**Vessel**		
5		*The information below is provisional and envelopes operational duty for fatigue assessment. It is not to be used as operational data or requirement.*		
6				
7	Materials of Construction	SB-575 N06022 △2		
8	Design Life	40 years		
9	Component Function & Life Cycle Description	This is a 'head' tank. It normally operates full. HOP-RFD-00001A/B & HOP-RFD-00002A/B discharge liquid during normal operation and equal volumes of liquid are received by the vessel. The vessel is emptied once a day. Washdown is once per year.		
10	Associated Equipment	Jacket, HOP-PJM-00001, HOP-PJM-00002, HOP-PJM-00003, HOP-PJM-00007 and HOP-VSL-00004A/B, HOP-VSL-00101A/B		
11				
12	**Load Type**	Quantity	Number of Cycles	Comment
13	Design Pressure (+ve/-ve)	15 psig / (FV)	10	Nominal assumption.
14	Operating Pressure (+ve/-ve)	(Atm) / -1.8psi	14235	
15	Operating Temperature (max/min)	122° F / 59° F	14235	Pressure cycles to be at 122° F. This is a uniform material temperature range, not between adjacent points.
16	Contents SG (min/max)	1.000 / 1.098	14235	
17	Contents Level	Empty / Flooded	14235	Coincident with pressure cycles.
18				
19				
20	**Localized Features**			
21	Nozzles			
22	All nozzles	Within 50° F of vessel temperature.	As above.	
23				
24				
25				
26				

27 NOTES.

- Cycle increase: The Seller must increase the numbers of operational cycles given above by 10% to account for commissioning duty unless otherwise noted.
- CVs inside parent vessels shall have buoyancy effects considered. PJMs shall be similarly considered and also the liquid thrust effect. See the Specification for Pressure Vessel Design and Fabrication, 24590-WTP-3PS-MV00-TP001. △2
- Fatigue environmental effects assumed negligible.

1	**EQUIPMENT CYCLIC DATA SHEET**			
2	Plant Item Number:	24590-HLW-MV-HOP-VSL-00903		
3	Plant Item Description	SBS Condensate Receiver Vessel		
4	Component	**Jacket**		
5		*The information below is provisional and envelopes operational duty for fatigue assessment. It is not to be used as operational data or requirement.*		
6				
7	Materials of Construction	ASME SA240 316L		
8	Design Life	40 years		
9	Component Function & Life Cycle Description	The jacket provides a cooling duty with cold water when the vessel is in service. *Provisional assumption is shutdown once a day.*		
10	Associated Equipment	24590-HLW-MV-HOP-VSL-00903		
11				
12	**Load Type**	Quantity	Number of Cycles	Comment
13	Design Pressure (+ve/-ve)	65 psig / (FV)	10	Nominal assumption.
14	Operating Pressure (+ve/-ve)	60 psig / (FV)	14235	
15	Operating Temperature (max/min)	122° F / 59° F	14235	Pressure cycles to be at 122° F. This is a uniform material temperature range, not between adjacent points.
16	Contents SG (min/max)	1.000	N/A	
17	Contents Level	Empty / Flooded	13	*3 year maintenance period assumed*
18				
19				
20	**Localized Features**			
21	Nozzles			
22	All nozzles	Within 50° F of vessel and jacket temperatures.	As above.	
23				
24				
25				
26				
27	NOTES. • Cycle increase: The Seller must increase the numbers of operational cycles given above by 10% to account for commissioning duty unless otherwise noted. • Fatigue environmental effects assumed negligible.			

1	**EQUIPMENT CYCLIC DATA SHEET**			
2	Plant Item Number:	(Parent) 24590-HLW-MV-HOP-VSL-00903		
3	Plant Item Description	SBS Condensate Receiver Vessel		
4	Component	**Charge Vessel** HOP-VSL-00004A/B, HOP-VSL-00101A/B		
5		*The information below is provisional and envelopes operational duty for fatigue assessment. It is not to be used as operational data or requirement.*		
6				
7	Materials of Construction	SB-575 N06022 △2		
8	Design Life	40 years		
9	Component Function & Life Cycle Description	This component is part of a pumping system. It repeatedly floods and empties. The action is caused by vacuum or air pressure being presented to the top nozzle. The surrounding parent vessel may contain any level of the fluid between the maximum operating level and the heel level. The charge vessel is subjected to buoyancy forces when immersed in the parent vessel contents. The vessel is in cyclic duty.		
10	Associated Equipment	See parent vessel MDS details.		
11				
12	**Load Type**	Quantity	Number of Cycles	Comment
13	Design Pressure (+ve/-ve)	32 psig / (FV)	10	Nominal assumption.
14	Operating Pressure (+ve/-ve)	29 psig / (FV)	2.1×10^7	
15	Operating Temperature (max/min)	122° F / 59° F	14235 △2	Pressure cycles to be at 122° F and non-coincident with temperature cycles. The range given is uniform material temperature range, not between adjacent points. Typically washdown 1/year and shutdowns = 13.
16	Contents SG (min/max)	1.000 / 1.098	14235 △2	
17	Contents Level	Empty / Flooded	2.1×10^7	Coincident with pressure cycles.
18				
20	**Localized Features**			
21	Nozzles			
22	Air Inlet	As above	As above including pressure cycles.	
23	Delivery	As above	As above including pressure cycles.	
24	Supports	As above	As above with contents level changing coincident with pressure cycle. Floatation on parent vessel contents level frequency.	
25				
26				
27	NOTES. • Cycle increase: The Seller must increase the numbers of operational cycles given above by 10% to account for commissioning duty unless otherwise noted. • CVs inside parent vessels shall have buoyancy effects considered. PJMs shall be similarly considered and also the liquid thrust effect. See the Specification for Pressure Vessel Design and Fabrication, 24590-WTP-3PS-MV00-TP001. △2 • Fatigue environmental effects assumed negligible.			

1	**EQUIPMENT CYCLIC DATA SHEET**			
2	Plant Item Number:	(Parent) 24590-HLW-MV-HOP-VSL-00903		
3	Plant Item Description	SBS Condensate Receiver Vessel		
4	Component	**Pulse Jet Mixer** (vessel) HOP-PJM-00001, HOP-PJM-00002, HOP-PJM-00003, HOP-PJM-00007		
5		*The information below is provisional and envelopes operational duty for fatigue assessment. It is not to be used as operational data or requirement.*		
6				
7	Materials of Construction	SB-575 N06022 △2		
8	Design Life	40 years		
9	Component Function & Life Cycle Description	This component is part of a mixing system. It repeatedly floods and empties. The action is caused by vacuum or air pressure being presented to the top nozzle. The surrounding parent vessel may contain any level of the fluid between the maximum operating level and the heel level. The vessel is subjected to buoyancy forces when immersed in the parent vessel contents. The vessel is in cyclic duty.		
10	Associated Equipment	See parent vessel MDS details.		
11				
12	**Load Type**	Quantity	Number of Cycles	Comment
13	Design Pressure (+ve/-ve)	80 psig / (FV)	10	Nominal assumption.
14	Operating Pressure (+ve/-ve)	58 psig / (FV)	4.2×10^7	
15	Operating Temperature (max/min)	122° F / 59° F	14235 △2	Pressure cycles to be at 122° F and non-coincident with temperature cycles. The range given is uniform material temperature range, not between adjacent points. Typically washdown 1/year and shutdowns = 13.
16	Contents SG (min/max)	1.000 / 1.098	14235 △2	
17	Contents Level	Empty / Flooded	4.2×10^7	Coincident with pressure cycles.
18	Thrust Load (lb) △2	252	4.2×10^7	See Note below
20	**Localized Features**			
21	Nozzles			
22	Air Inlet	As above	As above including pressure cycles.	
23	Delivery	As above	As above including pressure cycles.	
24	Supports	As above	As above with contents level changing coincident with pressure cycle. Floatation on parent vessel contents level frequency.	

27 NOTES.

- Cycle increase: The Seller must increase the numbers of operational cycles given above by 10% to account for commissioning duty unless otherwise noted.
- CVs inside parent vessels shall have buoyancy effects considered. PJMs shall be similarly considered and also the liquid thrust effect. See the Specification for Pressure Vessel Design and Fabrication, 24590-WTP-3PS-MV00-TP001. △2
- Fatigue environmental effects assumed negligible.
- Thrust loading should be ignored when considering deadweight loading of PJM with empty parent vessel, and should only be applied when considering buoyancy loading of PJM with full parent vessel. Assume parent vessel to be full for 50% of stated number of PJM cycles. △2

R10306584

MECHANICAL DATA SHEET: HEME

PLANT ITEM No.

24590-HLW-MV-HOP-HEME-00001 (A&B) 24590-HLW-HOP-HEME-00002 (A&B)

Project.	***RPP-WTP***	P&ID:	***24590-HLW-M6-HOP-P0002***
Project No	***24590***	Process Data Sheet:	***Deleted***
Project Site	***Hanford***	Vessel Drawing	***24590-HLW-MV-HOP-P0002001,2002,2003***
Description	***HLW Primary Offgas HEME***		

ISSUED BY RPP-WTP PDC INIT DATE

Reference Data

Charge Vessels (Tag Numbers)	***None***
Pulsejet Mixers / Agitators (Tag Numbers)	***None***
RFDs/Pumps (Tag Numbers)	***None***

Design Data

Quality Level		***QL-2***	Fabrication Specs	***24590-WTP-3PS-MV00-TP001***		
Seismic Category		***SC III***	Design Code	***ASME VIII Div 1, (See Note 3)***		
Service/Contents		***Radioactive Mist & Particulate***	Code Stamp	***Yes***		
Design Specific Gravity		***1***	NB Registration	***Yes***		
Maximum Operating Volume	gal	***0***	Weights (lbs)	Empty	Operating	Test
Total Volume	gal	***2349***	Estimated	***37,690***	***37,690***	***57,615***
			Actual *			

Inside Diameter	inch	***66***			Wind Design	***N/A***	
Length/Height (TL-TL)	inch	***146***			Snow Design	***N/A***	
		Vessel Operating	Vessel Design	Coil/Jacket Design	Seismic Design	***24590-WTP-3PS-MV00-TP002***	
Internal Pressure	psig	***ATM***	***15***	***N/A***	Seismic Base Moment *	ft*lb	
External Pressure	psig	***4***	***FV***	***N/A***	Postweld Heat Treat	***Not Required***	
Temperature	°F	***300***	***325***	***N/A***	Corrosion Allowance	Inch	***0.04***
Min Design Metal Temp	°F	***32***			Hydrostatic Test Pressure *	psig	

Please note that source, special nuclear and byproduct materials, as defined in the Atomic Energy Act of 1954 (AEA), are regulated at the U.S. Department of Energy (DOE) facilities exclusively by DOE acting pursuant to its AEA authority. DOE asserts that pursuant to the AEA, it has sole and exclusive responsibility and authority to regulate source, special nuclear, and byproduct materials at DOE-owned nuclear facilities. Information contained herein on radionuclides is provided for process description purposes only.

MARK W. HOFFMANN STATE OF WASHINGTON 0030932 REGISTERED PROFESSIONAL ENGINEER

4/22/04

EXPIRES 12/10/04

This bound document contains a total of 3 sheets

REV	DATE	REASON FOR REVISION	PREPARER	CHECKER	REVIEWER	APPROVER
0	4/22/04	Issued for Permitting Use				

BECHTEL	**MECHANICAL DATA SHEET: HEME**	**PLANT ITEM No.** ***24590-HLW-MV-HOP-HEME-00001 (A&B) 24590-HLW-HOP-HEME-00002 (A&B)***

Materials of Construction

Component	Material	Minimum Thickness / Size	Containment
Top Head	***SB 688 N08367***	***See Drawing***	***Primary***
Shell	***SB 688 N08367***	***See Drawing***	***Primary***
Bottom Head	***SB 688 N08367***	***See Drawing***	***Primary***
Support	***SA 240 304 (Note 2)***	***See Drawing***	***N/A***
Jacket/Coils/Half-Pipe Jacket	***N/A***	***N/A***	***N/A***
Internals	***SB 688/SB 462/SB 690 N08367***	***See Drawing***	***N/A***
Pipe	***SB 690 N08367***	***See Drawing***	***Primary***
Forgings/ Bar stock	***SB 564 N08367***	***See Drawing***	***N/A***
Gaskets	***EPDM***	***N/A***	***N/A***
Bolting	***See drawing***	***N/A***	***N/A***

Miscellaneous Data

Orientation	***Vertical***	Support Type	***Skirt***
Insulation Function	***None***	Insulation Material	***None***
Insulation Thickness (inch)	***None***	Internal Finish	***Welds descaled as laid***
		External Finish	***Welds descaled as laid***

Remarks

* To be determined by the vendor.

Note 1. Deleted

Note 2 : SA240 304 stainless steel material shall have carbon content of 0.030% maximum. Non welded items are excluded from this requirement.

Note 3: PUREX nozzles are excluded from the scope of ASME Code Section VIII, Division 1 in accordance with paragraph U-1 (e)(1).

Equipment Cyclic Data Sheet

Component Plant Item Number:	
Component Description	***Vessel***

The information below is provisional and envelopes operational duty for fatigue assessment. It is not to be used as operational data.

Materials of Construction	***SB 688 N08367 (6% Mo alloy)***
Design Life	***40 Years***
Component Function and Life Cycle Description	***The HEME is a semi-passive device designed for removal of radioactive mists and dissolved solids from the melter offgas. Removal is accomplished by flowing the offgas through a glass fiber filter bed. The operation is basically steady state with the exception of routine maintenance periods. Routine maintenance would be the change out of a Melter. This is expected to occur every 5 years. During the change out the HEME's would be isolated and allowed to remain at ambient temperature or approximately 70 deg. F.***

BECHTEL	**MECHANICAL DATA SHEET: HEME**	**PLANT ITEM No.** ***24590-HLW-MV-HOP-HEME-00001 (A&B) 24590-HLW-HOP-HEME-00002 (A&B)***

Load Type		Min	Max	Number of Cycles	Comment
Design Pressure	psig	***FV***	***15***	***0***	***No known mechanism to pressurize***
Operating Pressure	psig	***-4***	***0***	***50***	***Maximum pressure excursion in 5 years (isolating and opening up vessel)***
Operating Temperature	°F	***70***	***300***	***50***	***Maximum temperature excursions in 5 years (switch over to bypass line). Normal operating temperature is 117 °F.***
Contents Specific Gravity		***1***	***1***	***10***	***Maximum fill and drain events in 5 years.***
Contents Level	inch	***0***	***169***	***20***	

Localized Features	**Temperature Range (°F)**	**Number of Cycles / Comment**
Nozzles		
Supports		

Notes

- ***Cycle increase: The Seller must increase the numbers of operational cycles given above by 10% to account for commissioning duty unless otherwise noted.***
- ***The total volume is approximate and does not account for manufacturing tolerances, nozzles, and displacement of internals.***

MECHANICAL DATA SHEET: VESSEL

PLANT ITEM No.
24590-HLW-MV-HOP-VSL-00904

R10550707

Project:	***RPP-WTP***	P&ID:	***24590-HLW-M6-HOP-P20006 & HLW-M6-HOP-P20004***
Project No:	***24590***	Process Data Sheet:	***Deleted*** 1
Project Site:	***Hanford***	Vessel Drawing	***24590-HLW-MV-HOP-P0003*** 1
Description:	***Melter 2 SBS Condensate Receiver Vessel***		

ISSUED BY RPP-WTP PDC

Reference Data

Charge Vessels (Tag Numbers)	***HOP-VSL-00905A/B, HOP-VSL-00906A/B***
Pulsejet Mixers / Agitators (Tag Numbers)	***HOP-PJM-00008, HOP-PJM-00009, HOP-PJM-00010, HOP-PJM-00011***
RFDs/Pumps (Tag Numbers)	***HOP-RFD-00003A/B, HOP-RFD-00004A/B***

Design Data

Quality Level		***QL-2*** 1	Fabrication Specs	***24590-WTP-3PS-MV00-TP001*** 1		
Seismic Category		***SC-III*** 1	Design Code	***ASME VIII Div 1***		
Service/Contents		***Liquid Acidic Condensate***	Code Stamp	***Yes***		
Design Specific Gravity		***1.098***	NB Registration	***Yes***		
Maximum Operating Volume	gal	***8,199 (Note 6)*** 1	Weights (lbs)	Empty	Operating	Test
Total Volume	gal	***9,891 (Note 6)*** 1	Estimated	***37,900***	***111,000***	***121,000***
			Actual *	***42,810*** 1	***116,070*** 1	***134,470*** 1

Inside Diameter	inch	***144***			Wind Design	***Not Required***	
Length/Height (TL-TL)	inch	***93***			Snow Design	***Not Required***	
		Vessel Operating	Vessel Design	Coil/Jacket Design	Seismic Design	***24590-WTP-3PS-SS90-T0001*** ***24590-WTP-3PS-MV00-TP002***	
Internal Pressure	psig	***Atm***	***15***	***65***	Seismic Base Moment *	ft*lb	
External Pressure	psig	***1.8***	***FV***	***FV***	Postweld Heat Treat	***Not Required***	
Temperature	°F	***122***	***165***	***165***	Corrosion Allowance	Inch	***0.08 Shell / 0.04 Jacket***
Min. Design Metal Temp.	°F	***40***			Hydrostatic Test Pressure *	psig	

Note: Please note that source, special nuclear and byproduct materials, as defined in the Atomic Energy Act of 1954 (AEA), are regulated at the U.S. Department of Energy (DOE) facilities exclusively by DOE acting pursuant to its AEA authority. DOE asserts, that pursuant to the source, special nuclear, and byproduct materials at DOE-owned nuclear facilities. Information contained herein on radionuclides is provided for process description purposes only.

MARK W. HOFFMANN
STATE OF WASHINGTON
0030952
REGISTERED
PROFESSIONAL ENGINEER
EXPIRES 12/10/06

4/7/05

This Bound Document Contains a total of 8 Sheets.

REV	DATE	REASON FOR REVISION	PREPARER	CHECKER	REVIEWER	APPROVER
1	4/7/05	Issued for Permitting Use				
0	10/3/03	Issued for Permitting Use	J. Jackson	S. Lee	C. Slater	M. Hoffmann

BECHTEL	**MECHANICAL DATA SHEET: VESSEL**	**PLANT ITEM No.** ***24590-HLW-MV-HOP-VSL-00904***

Materials of Construction

Component	Material	Minimum Thickness / Size	Containment
Top Head	***SB-575 N06022***	***See Drawing***	***Auxiliary (Note 1)*** 1
Shell	***SB-575 N06022***	***See Drawing***	***Primary (Note 1)*** 1
Bottom Head	***SB-575 N06022***	***See Drawing***	***Primary (Note 1)*** 1
Support	***SA-240 304L***	***See Drawing***	***N/A (100% RT long seams)***
Jacket/Coils/Half-Pipe Jacket	***SA-240 316L***	***See Drawing***	***N/A***
Internals (incl. nozzle necks)	***SB-575 N06022 / SB-622 N06022***	***See Drawing***	***Thermocouples Primary (Note 1)*** 1
Pipe (Internal / Jacket)	***SB-622 N06022 / SA-312 316L***	***See Drawing***	***Note 1***
Forgings/ Bar stock (Vessel / Jacket)	***SB-564 N06022 / SA-182 F316L***		***Note 1*** 1
Gaskets	***None***		***N/A***
Bolting	***None***		***N/A***

Miscellaneous Data

Orientation	***Vertical***	Support Type	***Skirt***
Insulation Function	***None***	Insulation Material	***N/A***
Insulation Thickness (inch)	***N/A***	Internal Finish	***Note 2*** 1
		External Finish	***Note 2*** 1

Remarks

**** To be determined by the vendor.***

Note 1: All welds forming part of the primary and auxiliary containments, including the nozzle attachment welds shall be subjected to 100% volumetric examination. Radiography is the preferred method of volumetric testing. If it is considered impractical to perform radiographic examination, the Seller may propose ultrasonic examination. 1

Note 2: All welds descaled, as-laid.

Note 3: Deleted.

Note 4: Deleted.

Note 5: Normal Operating Temperature is 122 °F, Maximum Temperature is 140 °F.

Note 6: Vessel volumes are approximate and do not account for manufacturing tolerances, nozzles, and displacement of internals.

Note 7: Contents of this document are Dangerous Waste Permit affecting. 1

Note 8: This vessel is located in a Black Cell. 1

Note 9: The summary of the hydrodynamic forces for the fatigue case are as follows: 1

Summary of Hydrodynamic Forces for Normal PJM Operation (Fatigue) Case: 1

The peak loads given below are calculated based on velocity time histories generated using the CFD model of the SBSCV vessel for PJM drive flow of about 8 m/s. Force time histories were developed (e.g. see Figure 1) but the results given below are peak force summaries only.

1) Radial Direction - Peak Forces on Piping (Sch 40) below PJM Nozzle Level:

Pipe Diameter	Peak Positive Force/length	Peak Negative Force/length
inches	lbf/ft	lbf/ft
6	50	40
4	23	18
2	7	5
1	3	3

2) Radial Direction - Peak Forces on Piping (Sch 40) above PJM Nozzle Level:

Pipe Diameter	Peak Positive Force/length	Peak Negative Force/length
inches	lbf/ft	lbf/ft
6	3.0	1.0
4	1.5	0.5
2	0.4	0.2
1	0.1	0.1

3) Radial Direction - Charge Vessel Peak Force = 150 lbf

4) Radial Direction - PJM Peak Force = 200 lbf

5) Axial (Vertical) Direction - Charge Vessel Peak Force = 70 lbf

6) Axial (Vertical) Direction - PJM Peak Force = 70 lbf

7) Axial (Vertical) Direction – Peak Forces on Horizontal Piping (Sch 40)

Pipe Diameter	Peak Positive Force/length	Peak Negative Force/length
inches	lbf/ft	lbf/ft
6	28	6
4	13	4
2	4	1
1	1	0

Figure 1: Total Drag Loads per PJM Cycle at Monitor Point 20 Below PJM Nozzle Level - Radial Direction 1

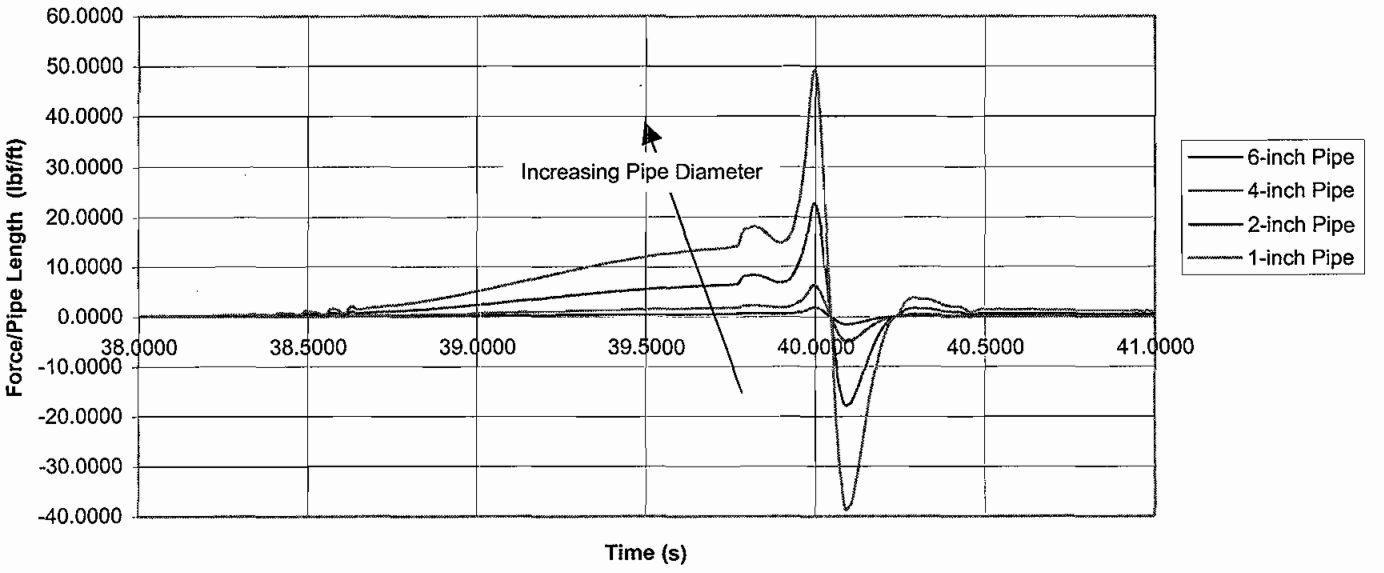

Note 10: The Hydrodynamic loads given in Note 9 are bounding loads. 1

Note 11: This Vessel was procured as Quality Level 1 and Seismic Category I. 1

Note 12: The changes implemented by Revision 1 of this data sheet are for BNI use only. 1

BECHTEL	**MECHANICAL DATA SHEET: VESSEL**	**PLANT ITEM No.** ***24590-HLW-MV-HOP-VSL-00904***

Equipment Cyclic Data Sheet

Component Plant Item Number:	***24590-HLW-MV-HOP-VSL-00904***
Component Description	***Melter 2 SBS Condensate Receiver Vessel***

The information below is provisional and envelopes operational duty for fatigue assessment. It is not to be used as operational data.

Materials of Construction	***SB-575 N06022***
Design Life	***40 Years***
Component Function and Life Cycle Description	***This is a 'head' tank. It is normally operates full. HOP-RFD-00003A/B and HOP-RFD-00004A/B discharge liquid during normal operation and equal volumes of liquid are received into the vessel. The vessel is emptied once a day. Washdown is once per year.***

Load Type		Min	Max	Number of Cycles	Comment
Design Pressure	psig	***FV***	***15***	***10***	***Nominal Assumption.***
Operating Pressure	psig	***-1.8***	***Atm***	***14235***	
Operating Temperature	°F	***59°F***	***122***	***14235***	***Pressure cycles to be at 122 °F. This is a uniform material temperature range, not between adjacent points.***
Contents Specific Gravity		***1.00***	***1.098***	***14235***	
Contents Level	inch	***Empty***	***Flooded***	***14235***	***Coincident with pressure cycles.***
Localized Features					
Nozzles 1					
Supports 1		***Within 50 °F of vessel temperature.***		***As above.***	

Notes

- ***Cycle increase: The Seller must increase the numbers of operational cycles given above by 10% to account for commissioning duty unless otherwise noted.***
- ***CVs inside parent vessels shall have buoyancy effects considered. PJMs shall be similarly considered and also the liquid thrust effect. See the Specification for Pressure Vessel Design and Fabrication, 24590-WTP-3PS-MV00-TP001.***
- ***Fatigue environmental effects assumed negligible.***

BECHTEL	**MECHANICAL DATA SHEET: VESSEL**	PLANT ITEM No. ***24590-HLW-MV-HOP-VSL-00904***

Equipment Cyclic Data Sheet

Component Plant Item Number:	***24590-HLW-MV-HOP-VSL-00904***
Component Description	***Jacket***

The information below is provisional and envelopes operational duty for fatigue assessment. It is not to be used as operational data.

Materials of Construction	***SA-240 316L***
Design Life	***40 Years***
Component Function and Life Cycle Description	***The jacket provides a cooling duty with cold water when the vessel is in service. Provisional assumption is shutdown once a day.***

Load Type		Min	Max	Number of Cycles	Comment
Design Pressure	psig	***FV***	***65***	***10***	***Nominal assumption.***
Operating Pressure	psig	***FV***	***60***	***14235***	
Operating Temperature	°F	***59°F***	***122 °F***	***14235***	***Pressure cycles to be at 122 °F. This is a uniform material temperature range, not between adjacent points.***
Contents Specific Gravity		***1.00***		***N/A***	
Contents Level	inch	***Empty***	***Flooded***	***13***	***3 year maintenance period assumed***

Localized Features		
Nozzles		
Supports	***Within 50 °F of vessel and jacket temperatures.***	***As above.***

Notes

- ***Cycle increase: The Seller must increase the numbers of operational cycles given above by 10% to account for commissioning duty unless otherwise noted.***
- ***Fatigue environmental effects assumed negligible.***

BECHTEL	**MECHANICAL DATA SHEET: VESSEL**	**PLANT ITEM No.** ***24590-HLW-MV-HOP-VSL-00904***

Equipment Cyclic Data Sheet

Component Plant Item Number:	***HOP-VSL-00905A/B, HOP-VSL-00906A/B***
Component Description	***Charge Vessels***

The information below is provisional and envelopes operational duty for fatigue assessment. It is not to be used as operational data.

Materials of Construction	***SB-575 N06022***
Design Life	***40 Years***
Component Function and Life Cycle Description	***This component is part of a pumping system. It repeatedly floods and empties. The action is caused by vacuum or air pressure being presented to the top nozzle. The surrounding parent vessel may contain any level of the fluid between the maximum operating level and the heel level. The charge vessel is subjected to buoyancy forces when immersed in the parent vessel contents. The vessel is in cyclic duty.***

Load Type		Min	Max	Number of Cycles	Comment
Design Pressure	psig	***FV***	***32***	***10***	***Nominal assumption.***
Operating Pressure	psig	***FV***	***29***	***2.1×10^7***	
Operating Temperature	°F	***59 °F***	***122 °F***	***14235*** (1)	***Pressure cycles to be at 122 °F and non-coincident with temperature cycles. The range given is uniform material temperature range, not between adjacent points. Typically washdown 1/year and shutdowns = 13.***
Contents Specific Gravity		***1.00***	***1.098***	***14235*** (1)	
Contents Level	inch	***Empty***	***Flooded***	***2.1×10^7***	***Coincident with pressure cycles.***
Localized Features					
Nozzles					
Air inlet		***As above***		***As above including pressure cycles.***	
Delivery		***As above***		***As above including pressure cycles.***	
Supports		***As above***		***As above with contents level changing coincident with pressure cycle. Floatation on parent vessel contents level frequency.***	

Notes

- ***Cycle increase: The Seller must increase the numbers of operational cycles given above by 10% to account for commissioning duty unless otherwise noted.***
- ***CVs inside parent vessels shall have buoyancy effects considered. PJMs shall be similarly considered and also the liquid thrust effect. See the Specification for Pressure Vessel Design and Fabrication, 24590-WTP-3PS-MV00-TP001.***
- ***Fatigue environmental effects assumed negligible.***

Equipment Cyclic Data Sheet

Component Plant Item Number:	***HOP-PJM-00008, HOP-PJM-00009, HOP-PJM-00010, HOP-PJM0-00011***
Component Description	***Pulse Jet Mixer***

The information below is provisional and envelopes operational duty for fatigue assessment. It is not to be used as operational data.

Materials of Construction	***SB-575 N06022***
Design Life	***40 Years***
Component Function and Life Cycle Description	***This component is part of a mixing system. It repeatedly floods and empties. The action is caused by vacuum or air pressure being presented to the top nozzle. The surrounding parent vessel may contain any level of the fluid between the maximum operating level and the heel level. The vessel is subjected to buoyancy forces when immersed in the parent vessel contents. The vessel is in cyclic duty.***

Load Type		Min	Max	Number of Cycles	Comment
Design Pressure	psig	***FV***	***80***	***10***	***Nominal assumption.***
Operating Pressure	psig	***FV***	***58***	***4.2×10^7***	
Operating Temperature	°F	***59 °F***	***122 °F***	***14235*** △1	***Pressure cycles to be at 122 °F and non-coincident with temperature cycles. The range given is uniform material temperature range, not between adjacent points. Typically washdown 1/year and shutdowns = 13.***
Contents Specific Gravity		***1.00***	***1.098***	***14235*** △1	
Contents Level	inch	***Empty***	***Flooded***	***4.2×10^7***	***Coincident with pressure cycles.***
Thrust Load △1	lb		***252*** △1	***4.2×10^7*** △1	***See Note below*** △1
Localized Features					
Nozzles					
Air inlet		***As above***		***As above including pressure cycles.***	
Delivery		***As above***		***As above including pressure cycles.***	
Supports		***As above***		***As above with contents level changing coincident with pressure cycle. Floatation on parent vessel contents level frequency.***	

Notes

- ***Cycle increase: The Seller must increase the numbers of operational cycles given above by 10% to account for commissioning duty unless otherwise noted.***
- ***CVs inside parent vessels shall have buoyancy effects considered. PJMs shall be similarly considered and also the liquid thrust effect. See the Specification for Pressure Vessel Design and Fabrication, 24590-WTP-3PS-MV00-TP001.***
- ***Fatigue environmental effects assumed negligible.***
- ***Thrust loading should be ignored when considering deadweight loading of PJM with empty parent vessel, and should only be applied when considering buoyancy loading of PJM with full parent vessel. Assume parent vessel to be full for 50% of stated number of PJM cycles.*** △1

BECHTEL	**MECHANICAL SYSTEMS DATA SHEET: VESSEL**	**PLANT ITEM No.** *24590-HLW-MV-RLD-VSL-00007*

R10343537

Project	***RPP-WTP***	P&ID.	***24590-HLW-M6-RLD-P0001***
Project No·	***24590***	Process Data Sheet	***Deleted***
Project Site	***Hanford***	Vessel Drawing	***24590-HLW-MV-RLD-P0003***
Description	***Acidic Waste Vessel RLD-VSL-00007***		

ISSUED BY RPP-WTP PDC 8/12/04 INIT DATE

Reference Data

Charge Vessels (Tag Numbers)	***RLD-VSL-00015A, RLD-VSL-00015B***
Pulsejet Mixers / Agitators (Tag Numbers)	***RLD-PJM-00005, RLD-PJM-00006, RLD-PJM-00007, RLD-PJM-00008***
RFDs/Pumps (Tag Numbers)	***RLD-RFD-00162A, RLD-RFD-00162B***

Design Data

Quality Level		***QL-2***	Fabrication Specs	***24590-WTP-3PS-MV00-TP001***		
Seismic Category		***SC-2***	Design Code	***ASME VIII Div 1***		
Service/Contents		***Radioactive Liquid***	Code Stamp	***Yes***		
Design Specific Gravity		***1.10***	NB Registration	***Yes***		
Maximum Operating Volume	gal	***15,758 (Note 3)***	Weights (lbs)	Empty	Operating	Test
Total Volume	gal	***18,145 (Note 3)***	Estimated	***43,000***	***186,000***	***194,000***
			Actual *			

Inside Diameter	inch	***156***			Wind Design	***Not Required***	
Length/Height (TL-TL)	inch	***186***			Snow Design	***Not Required***	
		Vessel Operating	Vessel Design	Coil/Jacket Design	Seismic Design	***24590-WTP-3PS-MV00-TP002*** ***24590-WTP-3PS-SS90-T0001***	
Internal Pressure	psig	***Atm***	***15***	***None***	Seismic Base Moment *	ft*lb	
External Pressure	psig	***0.05***	***FV***	***None***	Postweld Heat Treat	***Not Required***	
Temperature	°F	***143***	***168***	***None***	Corrosion Allowance	Inch	***0.04***
Min Design Metal Temp	°F	***40***			Hydrostatic Test Pressure *	psig	

Please note that source, special nuclear and byproduct materials, as defined in the Atomic Energy Act of 1954 (AEA), are regulated at the U.S. Department of Energy (DOE) facilities exclusively by DOE acting pursuant to its AEA authority. DOE asserts, that pursuant to the AEA, it has sole and exclusive responsibility and authority to regulate source, special nuclear, and byproduct materials at DOE-owned nuclear facilities. Information contained herein on radionuclides is provided for process description purposes only.

MARK W. HOFFMANN STATE OF WASHINGTON 0030952 REGISTERED PROFESSIONAL ENGINEER 7/22/04

EXPIRES 12/10/04

This bound document contains a total of 5 sheets

REV	DATE	REASON FOR REVISION	PREPARER	CHECKER	REVIEWER	APPROVER
0	7/22/04	Issued for Permitting Use				

BECHTEL	**MECHANICAL SYSTEMS DATA SHEET: VESSEL**	**PLANT ITEM No.** *24590-HLW-MV-RLD-VSL-00007*

Materials of Construction

Component	Material	Minimum Thickness / Size	Containment
Top Head	***SB 688 N08367***	***See Drawing***	***Auxiliary (see Note 4)***
Shell	***SB 688 N08367***	***See Drawing***	***Primary (see Note 4)***
Bottom Head	***SB 688 N08367***	***See Drawing***	***Primary (see Note 4)***
Support	***SA 240 304 (Note 2)***	***See Drawing***	***N/A***
Jacket/Coils/Half-Pipe Jacket	***N/A***	***N/A***	***N/A***
Internals	***SB 688 N08367***	***See Drawing***	***Thermocouples Primary (see Note 4)***
Pipe Seamless	***SB 690 N08367 / SB 622 N06022 (Note 8)***	***See Drawing***	***See Notes-1 and 4***
Forgings/ Bar stock	***SB 564 N08367***	***See Drawing***	***N/A***
Gaskets	***N/A***	***N/A***	***N/A***
Bolting	***N/A***	***N/A***	***N/A***

Miscellaneous Data

Orientation	***Vertical***	Support Type	***Skirt***
Insulation Function	***Not Applicable***	Insulation Material	***Not Applicable***
Insulation Thickness (inch)	***Not Applicable***	Internal Finish	***Descaled as laid***
		External Finish	***Descaled as laid***

Remarks

* To be determined by the vendor.

Note 1: Nozzle necks below the high operating liquid level are Primary, others Auxiliary.
Note 2: Material shall have Carbon Content of 0.030% Max. Non-welded specialty items are excluded from this requirement.
Note 3: Vessel volumes are approximate and do not account for manufacturing tolerances, nozzles, and displacement of internals.
Note 4: All welds forming part of the primary and auxiliary containment including nozzle attachment welds shall be subjected to100% volumetric examination.
Note 5: This vessel is located in a Black Cell.
Note 6: Contents of this document are Dangerous Waste Permit affecting.
Note 7: As a minimum, all welds on internal components and supports shall be dye-penetrant tested.
Note 8: Use SB 622 N06022 material for Ejectors (by others) and Ejector Piping.
Note 9: Internal components and supports natural frequencies shall not be less than 1.0 cycle per second.

Equipment Cyclic Data Sheet

Component Plant Item Number:	***24590-HLW-MV-RLD-VSL-00007***
Component Description	***Parent Vessel***

The information below is provisional and envelopes operational duty for fatigue assessment. It is not to be used as operational data.

Materials of Construction	***SB 688 N08367***
Design Life	***40 years***
Component Function and Life Cycle Description	***This is a 'head' tank. It is normally operates full. It's Charge Vessels discharge liquid during normal operation and equal volumes of liquid are received into the vessel.***

Load Type		Min	Max	Number of Cycles	Comment
Design Pressure	psig	***FV***	***15***	***10***	***Nominal assumption***
Operating Pressure	psig	***-2.5***	***0***	***4.5×10^{7}***	***Continuous operation of PJM''s with cycle time of 28 sec.***
Operating Temperature	°F	***137***	***143***	***N/A***	
Contents Specific Gravity		***1.0***	***1.10***	***N/A***	
Contents Level	inch	***Empty***	***Flooded***	***14,600***	***One cycle per day.***

Localized Features		
Nozzles	***Within 50^{0}F of operating temperature range***	***As above***
Air Inlet		
Delivery		
Supports		

Hydrodynamic Loading

Description	***Pulse jet mixers impose a cyclical hydrodynamic load on all internal components. The components shall be supported against these hydrodynamic loads due to both normal operation and overblow conditions. The following table indicates the hydrodynamic pressure for normal and overblow conditions at ranges of elevations in the vessel and the number of design cycles for each condition. The hydrodynamic forces cycle between the indicated pressure ranges applied across the projected area of the component. Positive hydrodynamic forces act in the radial, outward direction and the vertical, upward direction. Seller shall apply the radial load simultaneously in the radial direction and normal to the radial direction in the horizontal plane.***

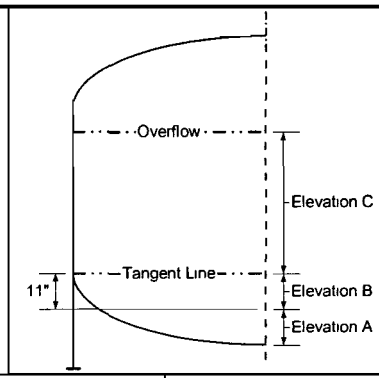

Condition	Hydrodynamic Pressure Range, psi						Number of Cycles
	Elevation A		Elevation B		Elevation C		
	Radial	Vertical	Radial	Vertical	Radial	Vertical	
Normal Operation	***0.40 to -0.20***	***0.30 to -0.00***	***0.10 to -0.10***	***0.30 to -0.00***	***0.10 to -0.10***	***0.30 to -0.00***	***4.5×10^{7}***
Overblow	***0 to 2***	***0 to 2***	***0 to 1***	***0 to 1***	***0 to 0.5***	***0 to 0.5***	***100***

Notes

- ***Cycle increase: The Seller must increase the numbers of operational cycles given above by 10% to account for commissioning duty unless otherwise noted.***

BECHTEL	**MECHANICAL SYSTEMS DATA SHEET: VESSEL**	**PLANT ITEM No.** ***24590-HLW-MV-RLD-VSL-00007***

Equipment Cyclic Data Sheet

Component Plant Item Number:	***RLD-VSL-00015A, RLD-VSL-00015B***
Component Description	***Charge Vessels***

The information below is provisional and envelopes operational duty for fatigue assessment. It is not to be used as operational data.

Materials of Construction	***SB 688 N08367***
Design Life	***40 years***
Component Function and Life Cycle Description	***This component is part of a pumping system. It repeatedly floods and empties. The action is caused by vacuum or air pressure being presented to the top nozzle. The surrounding parent vessel may contain any level of the fluid between the maximum operating level and the heel level. The charge vessel is subjected to buoyancy forces when immersed in the parent vessel contents. The vessel is in cyclic duty.***

Load Type		Min	Max	Number of Cycles	Comment
Design Pressure	psig	***FV***	***125***	***10***	***Nominal assumption***
Operating Pressure	psig	***FV***	***73.5***	***2.5×10^6***	***Continuous operation with cycle time of 495 sec.***
Operating Temperature	°F	***137***	***143***	***NA***	
Contents Specific Gravity		***1.0***	***1.10***	***NA***	
Contents Level	inch	***Empty***	***Flooded***	***2.5×10^6***	***Coincident with pressure cycles***

Localized Features		
Nozzles	***As above***	***As above***
Air Inlet	***As above***	***As above***
Delivery		
Supports	***As above***	***As above with contents level changing coincident with pressure cycles.***

Notes

- ***Cycle increase: The Seller must increase the numbers of operational cycles given above by 10% to account for commissioning duty unless otherwise noted.***
- ***CVs inside parent vessels shall have buoyancy effects considered. PJMs shall be similarly considered and also the liquid thrust effect.***

BECHTEL	**MECHANICAL SYSTEMS DATA SHEET: VESSEL**	**PLANT ITEM No.** ***24590-HLW-MV-RLD-VSL-00007***

Equipment Cyclic Data Sheet

Component Plant Item Number:	***RLD-PJM-00005, RLD-PJM-00006, RLD-PJM-00007 & RLD-PJM-00008***
Component Description	***Pulse Jet Mixers***

The information below is provisional and envelopes operational duty for fatigue assessment. It is not to be used as operational data.

Materials of Construction	***SB 688 N08367***
Design Life	***40 years***
Component Function and Life Cycle Description	***This component is part of a mixing system. It repeatedly floods and empties. The action is caused by vacuum or air pressure being presented to the top nozzle. The surrounding parent vessel may contain any level of the fluid between the maximum operating level and the heel level. The PJM is subjected to buoyancy forces when immersed in the parent vessel contents. The vessel is in cyclic duty.***

Load Type		Min	Max	Number of Cycles	Comment
Design Pressure	psig	***FV***	***125***	***10***	***Nominal assumption***
Operating Pressure	psig	***F V***	***95***	***4.5×10^7***	***PJM continuous agitation with cycle time of 28 sec.***
Operating Temperature	°F	***137***	***143***	***NA***	
Contents Specific Gravity		***1.0***	***1.10***	***NA***	
Contents Level	inch	***Empty***	***Flooded***	***4.5×10^7***	***Coincident with pressure cycles***
Thrust	lbf		***262***	***4.5×10^7***	***See Note below***

Localized Features		
Nozzles	***As above***	***As above***
Air Inlet	***As above***	***As above***
Delivery		
Supports	***As above***	***As above with contents level changing coincident with pressure cycles.***

Notes

- ***Cycle increase: The Seller must increase the numbers of operational cycles given above by 10% to account for commissioning duty unless otherwise noted.***
- ***CVs inside parent vessels shall have buoyancy effects considered. PJMs shall be similarly considered and also the liquid thrust effect.***
- ***The PJM supports shall be designed to cycle between fully buoyant (PJM empty and parent vessel full) and fully loaded (PJM full and parent vessel empty) states. Thrust load shall be applied only to the fully buoyant state. Assume the parent vessel is full for 50% of the number of PJM cycles.***

MECHANICAL SYSTEMS DATA SHEET: VESSEL

PLANT ITEM No.
24590-HLW-MV-RLD-VSL-00008

R10343536

Project	***RPP-WTP***	P&ID	***24590-HLW-M6-RLD-P0002***
Project No:	***24590***	Process Data Sheet	***Deleted***
Project Site:	***Hanford***	Vessel Drawing	***24590-HLW-MV-RLD-~~P~~0004*** P
Description:	***Plant Wash and Drains Vessel RLD-VSL-00008***		

ISSUED BY RPP-WTP PDC 7/27/04 DATE

Reference Data

Charge Vessels (Tag Numbers)	***RLD-VSL-00016A, RLD-VSL-00016B***
Pulsejet Mixers / Agitators (Tag Numbers)	***RLD-PJM-00001, RLD-PJM-00002, RLD-PJM-00003, RLD-PJM-00004***
RFDs/Pumps (Tag Numbers)	***RLD-RFD-00163A, RLD-RFD-00163B***

Design Data

Quality Level		***QL-1***	Fabrication Specs	***24590-WTP-3PS-MV00-TP001***		
Seismic Category		***SC-1***	Design Code	***ASME VIII Div 1***		
Service/Contents		***Radioactive Liquid***	Code Stamp	***Yes***		
Design Specific Gravity		***1.186***	NB Registration	***Yes***		
Maximum Operating Volume	gal	***10,628 (Note 3)***	Weights (lbs)	Empty	Operating	Test
Total Volume	gal	***13,774 (Note 3)***	Estimated	***43,000***	***150,800***	***158,600***
			Actual *			

Inside Diameter	inch	***156***			Wind Design	***Not Required***	
Length/Height (TL-TL)	inch	***117***			Snow Design	***Not Required***	
		Vessel Operating	Vessel Design	Coil/Jacket Design	Seismic Design	***24590-WTP-3PS-MV00-TP002*** ***24590-WTP-3PS-SS90-T0001*** 1	
Internal Pressure	psig	***Atm***	***15***	***None***	Seismic Base Moment *	ft*lb	
External Pressure	psig 1	***0.05***	***FV***	***None***	Postweld Heat Treat	***Not Required***	
Temperature	°F	***140***	***165***	***None***	Corrosion Allowance	Inch	***0.08***
Min Design Metal Temp	°F	***40***			Hydrostatic Test Pressure *	psig	

Please note that source, special nuclear and byproduct materials, as defined in the Atomic Energy Act of 1954 (AEA), are regulated at the U.S. Department of Energy (DOE) facilities exclusively by DOE acting pursuant to its AEA authority. DOE asserts, that pursuant to the AEA, it has sole and exclusive responsibility and authority to regulate source, special nuclear, and byproduct materials at DOE-owned nuclear facilities. Information contained herein on radionuclides is provided for process description purposes only.

MARK W. HOFFMANN
STATE OF WASHINGTON
0030952
REGISTERED PROFESSIONAL ENGINEER
7/22/04

EXPIRES 12/10/04

This bound document contains a total of 5 sheets

REV	DATE	REASON FOR REVISION	PREPARER	CHECKER	REVIEWER	APPROVER
1	7/22/04	Issued for Permitting Use				
0	12/18/02	Issued for Permitting Use	Jessica Jackson	Cliff Slater	N/A	Mark Hoffmann

BECHTEL	**MECHANICAL SYSTEMS DATA SHEET: VESSEL**	**PLANT ITEM No.** *24590-HLW-MV-RLD-VSL-00008*

Materials of Construction

Component	Material	Minimum Thickness / Size	Containment
Top Head	***SA 240 316 (Note 2)***	***See Drawing***	***Auxiliary (see note 4)***
Shell	***SA 240 316 (Note 2)***	***See Drawing***	***Primary (see note 4)***
Bottom Head	***SA 240 316 (Note 2)***	***See Drawing***	***Primary (see note 4)***
Support	***SA 240 304 (Note 2)***	***See Drawing***	***N/A***
Jacket/Coils/Half-Pipe Jacket	***N/A***	***N/A***	***N/A***
Internals	***SA 240 316 (Note 2)***	***See Drawing***	***Thermocouples Primary (see note 4)***
Pipe Seamless 1	***SA 312 TP316 (Note 2) / SB 622 N06022 (Note 8)*** 1	***See Drawing***	***See Notes 1 and 4***
Forgings/ Bar stock	***SA 182 F316 (Note 2)***	***See Drawing***	***N/A***
Gaskets	***N/A***	***N/A***	***N/A***
Bolting	***N/A***	***N/A***	***N/A***

Miscellaneous Data

Orientation	***Vertical***	Support Type	***Skirt***
Insulation Function	***Not Applicable***	Insulation Material	***Not Applicable***
Insulation Thickness (inch)	***Not Applicable***	Internal Finish	***Descaled as laid***
		External Finish	***Descaled as laid***

Remarks

• To be determined by the vendor.

Note 1: Nozzle necks below the high operating liquid level are Primary, others Auxiliary.
Note 2: Material shall have Carbon Content of 0.030% Max. Non-welded specialty items are excluded from this requirement.
Note 3: Vessel volumes are approximate and do not account for manufacturing tolerances, nozzles, and displacement of internals. 1
Note 4: All welds forming part of the primary and auxiliary containment including nozzle attachment welds shall be subjected to100% volumetric examination. 1
Note 5: This vessel is located in a Black Cell. 1
Note 6: Contents of this document are Dangerous Waste Permit affecting. 1
Note 7: As a minimum, all welds on internal components and supports shall be dye-penetrant tested. 1
Note 8: Use SB 622 N06022 material for Ejectors (by others) and Ejector Piping. 1
Note 9: Internal components and supports natural frequencies shall not be less than 1.0 cycle per second. 1

BECHTEL	**MECHANICAL SYSTEMS DATA SHEET: VESSEL**	**PLANT ITEM No.** ***24590-HLW-MV-RLD-VSL-00008***

Equipment Cyclic Data Sheet

Component Plant Item Number:	***24590-HLW-MV-RLD-VSL-00008***
Component Description	***Parent Vessel***

The information below is provisional and envelopes operational duty for fatigue assessment. It is not to be used as operational data.

Materials of Construction	***SA 240 316***
Design Life	***40 years***
Component Function and Life Cycle Description	***This is a 'head' tank. It is normally operates full. It's Charge Vessels discharge liquid during normal operation and equal volumes of liquid are received into the vessel.***

Load Type		Min	Max	Number of Cycles	Comment
Design Pressure	psig	***FV***	***15***	***10***	***Nominal assumption***
Operating Pressure	psig	***-2.5*** 1	***0*** 1	***4.2×10^7*** 1	***Continuous operation of PJM"s with cycle time of 30 sec.*** 1
Operating Temperature	°F	***59***	***140***	***NA*** 1	1
Contents Specific Gravity		***0.999***	***1.186***	***NA*** 1	1
Contents Level	inch	***Empty***	***Flooded***	***14,600*** 1	***One cycle per day*** 1

Localized Features		
Nozzles	***Within 50°F of operating temperature range***	***As above***
Air Inlet		
Delivery		
Supports		

Hydrodynamic Loading 1

Description	***Pulse jet mixers impose a cyclical hydrodynamic load on all internal components. The components shall be supported against these hydrodynamic loads due to both normal operation and overblow conditions. The following table indicates the hydrodynamic pressure for normal and overblow conditions at ranges of elevations in the vessel and the number of design cycles for each condition. The hydrodynamic forces cycle between the indicated pressure ranges applied across the projected area of the component. Positive hydrodynamic forces act in the radial, outward direction and the vertical, upward direction. Seller shall apply the radial load simultaneously in the radial direction and normal to the radial direction in the horizontal plane.***

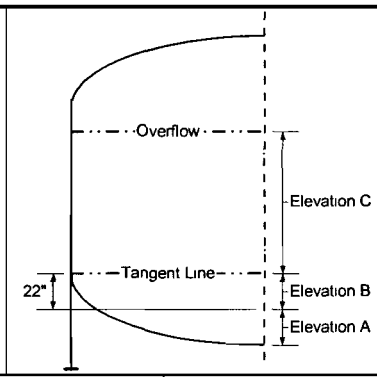

Condition	Hydrodynamic Pressure Range, psi						Number of Cycles
	Elevation A		Elevation B		Elevation C		
	Radial	Vertical	Radial	Vertical	Radial	Vertical	
Normal Operation	***0.45 to -0.20***	***0.30 to -0.00***	***0.10 to -0.10***	***0.30 to -0.00***	***0.10 to -0.10***	***0.30 to -0.00***	***4.2×10^7***
Overblow	***0 to 2***	***0 to 2***	***0 to 1***	***0 to 1***	***0 to 0.5***	***0 to 0.5***	***100***

Notes

- ***Cycle increase: The Seller must increase the numbers of operational cycles given above by 10% to account for commissioning duty unless otherwise noted.***

BECHTEL	**MECHANICAL SYSTEMS DATA SHEET: VESSEL**	**PLANT ITEM No.** ***24590-HLW-MV-RLD-VSL-00008***

Equipment Cyclic Data Sheet

Component Plant Item Number:	***RLD-VSL-00016A, RLD-VSL-00016B***
Component Description	***Charge Vessels***

The information below is provisional and envelopes operational duty for fatigue assessment. It is not to be used as operational data.

Materials of Construction	***SA 240 316***
Design Life	***40 years***
Component Function and Life Cycle Description	***This component is part of a pumping system. It repeatedly floods and empties. The action is caused by vacuum or air pressure being presented to the top nozzle. The surrounding parent vessel may contain any level of the fluid between the maximum operating level and the heel level. The charge vessel is subjected to buoyancy forces when immersed in the parent vessel contents. The vessel is in cyclic duty.***

Load Type		Min	Max	Number of Cycles	Comment
Design Pressure	psig	***FV***	***125***	***10***	***Nominal assumption***
Operating Pressure	psig	***FV***	***73.5***	***2.6×10^6*** 1	***Continuous operation with cycle time of 490 sec.*** 1
Operating Temperature	°F	***59***	***140***	***NA*** 1	1
Contents Specific Gravity		***0.999***	***1.186***	***NA*** 1	1
Contents Level	inch	***Empty***	***Flooded***	***2.6×10^6*** 1	***Coincident with pressure cycles***

Localized Features		
Nozzles	***As above***	***As above***
Air Inlet	***As above***	***As above***
Delivery		
Supports	***As above***	***As above with contents level changing coincident with pressure cycles.***

Notes

- ***Cycle increase: The Seller must increase the numbers of operational cycles given above by 10% to account for commissioning duty unless otherwise noted.***
- ***CVs inside parent vessels shall have buoyancy effects considered. PJMs shall be similarly considered and also the liquid thrust effect.***

BECHTEL	**MECHANICAL SYSTEMS DATA SHEET: VESSEL**	**PLANT ITEM No.** ***24590-HLW-MV-RLD-VSL-00008***

Equipment Cyclic Data Sheet

Component Plant Item Number:	***RLD-PJM-00001, RLD-PJM-00002, RLD-PJM-00003 & RLD-PJM-00004***
Component Description	***Pulse Jet Mixers***

The information below is provisional and envelopes operational duty for fatigue assessment. It is not to be used as operational data.

Materials of Construction	***SA 240 316***
Design Life	***40 years***
Component Function and Life Cycle Description	***This component is part of a mixing system. It repeatedly floods and empties. The action is caused by vacuum or air pressure being presented to the top nozzle. The surrounding parent vessel may contain any level of the fluid between the maximum operating level and the heel level. The PJM is subjected to buoyancy forces when immersed in the parent vessel contents. The vessel is in cyclic duty.*** 1

Load Type		Min	Max	Number of Cycles	Comment
Design Pressure	psig	***FV***	***125***	***10***	***Nominal assumption***
Operating Pressure	psig	***FV***	***95*** 1	***4.2×10^7*** 1	***PJM continuous agitation with cycle time of 30 sec.*** 1
Operating Temperature	°F	***59***	***140***	***NA*** 1	1
Contents Specific Gravity		***0.999***	***1.186***	***NA*** 1	1
Contents Level	inch	***Empty***	***Flooded***	***4.2×10^7*** 1	***Coincident with pressure cycles***
1 Thrust	lbf		***262***	***4.2×10^7*** 1	***See Note below***

Localized Features		
Nozzles	***As above***	***As above***
Air Inlet	***As above***	***As above including pressure cycles***
Delivery		
Supports	***As above***	***As above with contents level changing coincident with pressure cycles.***

Notes

- ***Cycle increase: The Seller must increase the numbers of operational cycles given above by 10% to account for commissioning duty unless otherwise noted.***
- ***CVs inside parent vessels shall have buoyancy effects considered. PJMs shall be similarly considered and also the liquid thrust effect.***
- ***The PJM supports shall be designed to cycle between fully buoyant (PJM empty and parent vessel full) and fully loaded (PJM full and parent vessel empty) states. Thrust load shall be applied only to the fully buoyant state. Assume the parent vessel is full for 50% of the number of PJM cycles.*** 1

MECHANICAL SYSTEMS DATA SHEET: VESSEL

PLANT ITEM No.
24590-HLW-MV-RLD-VSL-00002

R10343184

Project	***RPP-WTP***	P&ID	***24590-HLW-M6-RLD-P0014***
Project No	***24590***	Process Data Sheet	***Deleted*** 1
Project Site	***Hanford***	Vessel Drawing	***24590-HLW-MV-RLD-P0002***
Description	***HLW Offgas Drains Collection Vessel RLD-VSL-00002***		

Reference Data

Charge Vessels (Tag Numbers)	***None***
Pulsejet Mixers / Agitators (Tag Numbers)	***None***
RFDs/Pumps (Tag Numbers)	***None***

ISSUED BY RPP-WTP PDC 8/4/04 INIT DATE

Design Data

Quality Level		***CM*** 1	Fabrication Specs	***24590-WTP-3PS-MV00-TP001***		
Seismic Category		***SC-III***	Design Code	***ASME VIII Div 1***		
Service/Contents		***Radioactive Liquid***	Code Stamp	***Yes***		
Design Specific Gravity		***1.0*** 1	NB Registration	***Yes***		
Operating Volume	gal	***292***	Weights (lbs)	Empty	Operating	Test
Total Volume	gal	***366***	Estimated	***1,200***	1 ***3700***	1 ***4060***
			Actual *			

Inside Diameter	inch	***42***			Wind Design	***Not Required***	
Length/Height (TL-TL)	inch	***48***			Snow Design	***Not Required***	
		Vessel Operating	Vessel Design	Coil/Jacket Design	Seismic Design 1	***24590-WTP-3PS-MV00-TP002*** ***24590-WTP-3PS-FB01-T0001***	
Internal Pressure	psig	1 ***0***	***15***		Seismic Base Moment *	ft*lb	
External Pressure	psig	***0***	***FV***		Postweld Heat Treat	***Not Required***	
Temperature	°F	***141*** 1	***167***		Corrosion Allowance	Inch	***0.04***
Min. Design Metal Temp.	°F	***40***			Hydrostatic Test Pressure *	Psig	

Please note that source, special nuclear and byproduct materials, as defined in the Atomic Energy Act of 1954 (AEA), are regulated at the U.S. Department of Energy (DOE) facilities exclusively by DOE acting pursuant to its AEA authority. DOE asserts, that pursuant to the AEA, it has sole and exclusive responsibility and authority to regulate source, special nuclear, and byproduct materials at DOE-owned nuclear facilities. Information contained herein on radionuclides is provided for process description purposes only.

MARK W. HOFFMANN
STATE OF WASHINGTON
0030952
REGISTERED
PROFESSIONAL ENGINEER
8/3/04

EXPIRES 12/10/04

This bound document contains a total of 2 sheets

REV	DATE	REASON FOR REVISION	PREPARER	CHECKER	REVIEWER	APPROVER
1	8/3/04	Issued for Permitting Use				
0	12/18/02	Issued for Permitting Use	Jessica Jackson	Cliff Slater	N/A	Mark Hoffmann

BECHTEL	**MECHANICAL SYSTEMS DATA SHEET: VESSEL**	**PLANT ITEM No.** ***24590-HLW-MV-RLD-VSL-00002***

Materials of Construction

Component	Material	Minimum Thickness / Size	Containment
Top Head	***SA 240 316 Note 1***	***See Drawing***	***Auxiliary (see Note 2)*** 1
Shell	***SA 240 316 Note 1***	***See Drawing***	***Primary (see Note 2)*** 1
Bottom Head	***SA 240 316 Note 1***	***See Drawing***	***Primary (see Note 2)*** 1
Support	***SA 240 304 Note 1***	***See Drawing***	***N/A***
Jacket/Coils/Half-Pipe Jacket	***N/A***	***N/A***	***N/A***
Internals	***SA 240 316 Note 1***	***See Drawing***	***Thermocouples Primary (see Note 2)*** 1
Pipe	***SA 312 TP316 Note 1***	***See Drawing***	***See Note 2***
Forgings/ Bar stock	***SA 182 F316 Note 1***	***See Drawing***	***N/A***
Gaskets	***N/A***	***N/A***	***N/A***
Bolting	***N/A***	***N/A***	***N/A***

Miscellaneous Data

Orientation	***Vertical***	Support Type	***Skirt***
Insulation Function	***Not Applicable***	Insulation Material	***Not Applicable***
Insulation Thickness (inch)	***Not Applicable***	Internal Finish	***Welds de-scaled as laid*** 1
		External Finish	***Welds de-scaled as laid*** 1

Remarks

* To be determined by the vendor.

Note 1: Max. Carbon content 0.030% for welded components. 1

Note 2: All welds forming part of the primary and auxiliary containment including nozzle attachment welds shall be subjected to 100% volumetric examination. 1

Note 3: Tank volumes are approximates and do not account for manufacturing tolerances, nozzles, and displacement of internals. 1

Note 4: The Vessel has 40 years life cycle. 1

Note 5: This vessel is in a Black Cell. 1

Note 6: Contents of this document are Dangerous Waste Permit affecting. 1

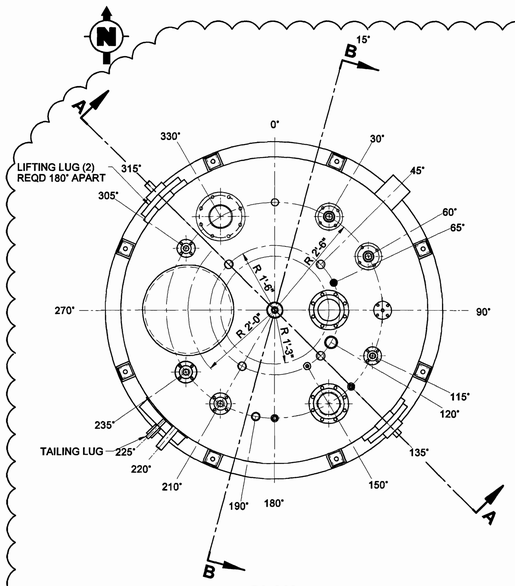

PLAN

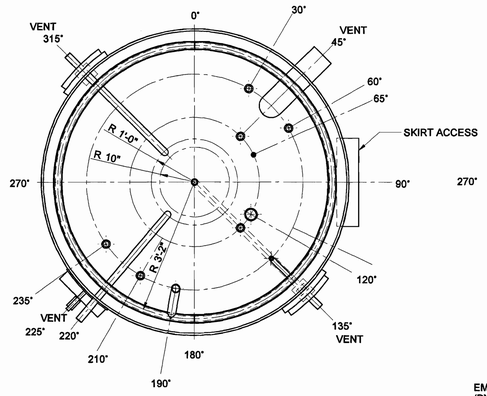

SECTION C-C

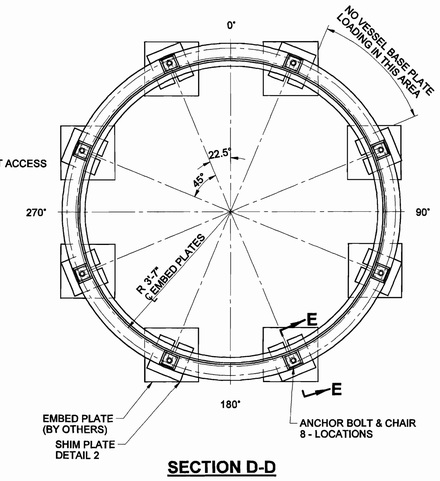

SECTION D-D

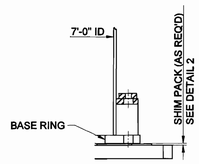

SECTION E-E

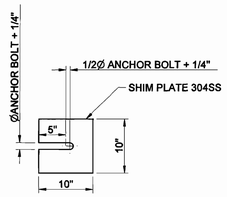

DETAIL 2
(SHIM PLATE DETAIL)

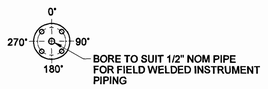

DETAIL 1

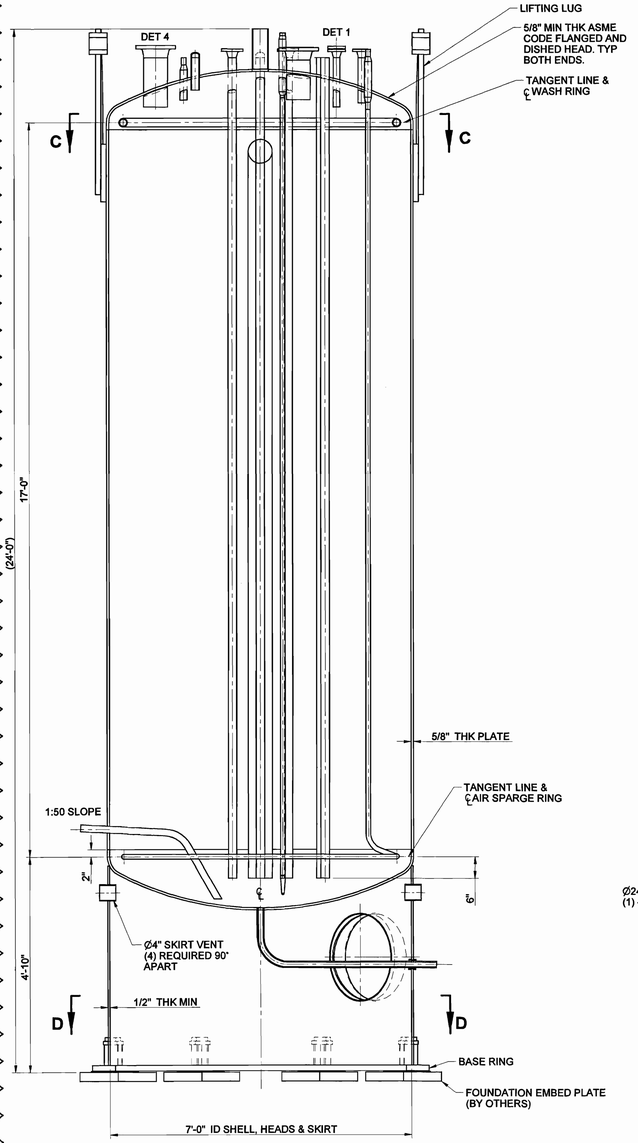

SECTION A-A

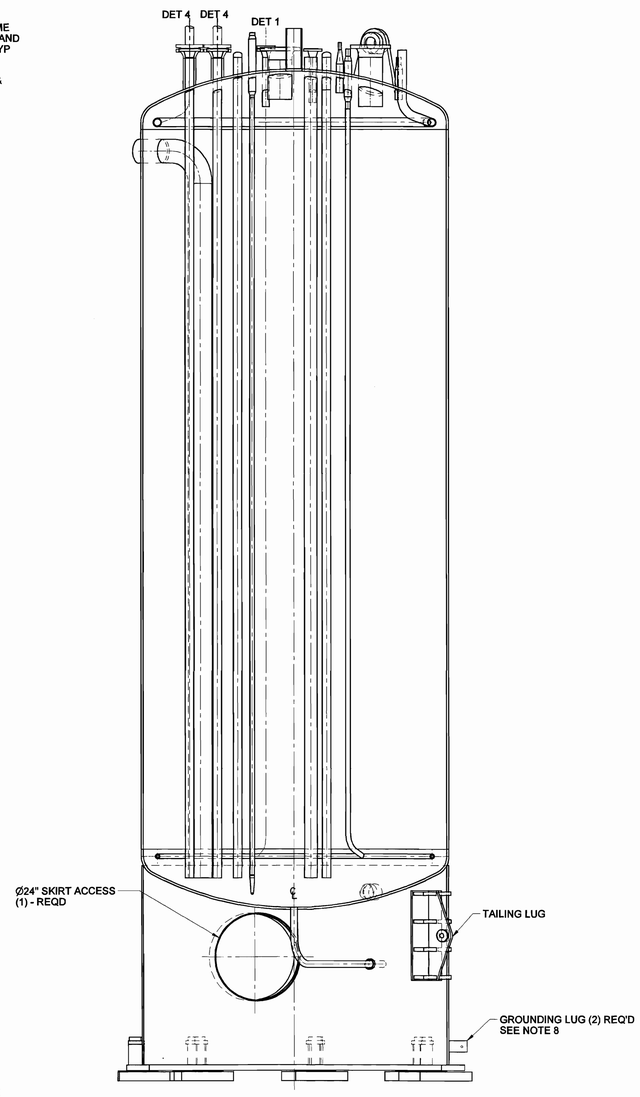

SECTION B-B

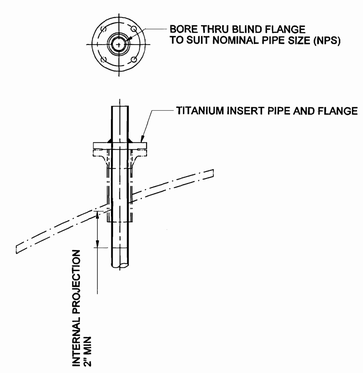

DETAIL 4

GENERAL NOTES:

1. ALL INTERNALS SHALL BE DESIGNED , PROVIDED AND INSTALLED BY SELLER.
2. FOR DISTANCE OF DIP PIPES TO BOTTOM HEAD USE 2" CLEARANCE UNLESS OTHERWISE SPECIFIED.
3. DELETED.
4. ALL FLANGES ARE 150# R.F.W.N, ALL BLIND FLANGES ARE 150# R.F. BOLT HOLES SHALL STRADDLE NORMAL VESSEL
5. SELLER SHALL PROVIDE (8) SHIM PACKS EACH COMPRISING OF:

   (2) 1/4" THICK PLATES
   (1) 1/8" THICK PLATE
   (2) 1/16" THICK PLATES

   THE SKIRT SHALL BE DESIGNED TO BE SUPPORTED BY THE SHIM PLATES SPACED AS SHOWN BY THE EMBED PLAN VIEW (SECTION D-D).
6. SELLER SHALL SIZE ANCHOR BOLTS AND CHAIRS PER REFERENCE DRAWING No. 24590-WTP-MV-M59T-00026. BUYER SHALL PROVIDE AND WELD ANCHOR BOLTS TO A240 304L PLATES EMBEDDED IN CONCRETE FLOOR. SELLER SHALL SIZE ANCHOR BOLTS USING MATERIAL PROPERTIES OF THE EMBEDDED PLATE.
7. DELETED
8. GROUNDING LUG DETAILS PER REF. DWG# 24590-WTP-MV-M59T-00012.

HOLDS:

1. DELETED
2. DELETED
3. AIR SPARGER DETAILS PENDING REVIEW BY SYSTEM ENGINEERING.
4. LIFTING LUG AND TAILING LUG LOCATION PENDING REVIEW BY CONSTRUCTION.
5. GROUNDING LUG LOCATION PENDING REVIEW BY ELECTRICAL.
6. ANCHOR BOLT SIZE AND QUANTITY PENDING REVIEW BY CIVIL ENGINEERING.
7. DELETED.

THIS DRAWING TO BE READ IN CONJUNCTION WITH THE MECHANICAL DATA SHEET No 24590-HLW-MVD-HDH-P0003

PLEASE NOTE THAT SOURCE, SPECIAL NUCLEAR AND BYPRODUCT MATERIALS, AS DEFINED IN THE ATOMIC ENERGY ACT OF 1954 (AEA) ARE REGULATED AT THE U.S. DEPARTMENT OF ENERGY (DOE) FACILITIES EXCLUSIVELY BY DOE ACTING PURSUANT TO ITS AEA AUTHORITY. DOE ASSERTS, THAT PURSUANT TO THE AEA, IT HAS SOLE AND EXCLUSIVE RESPONSIBILITY AND AUTHORITY TO REGULATE SOURCE, SPECIAL NUCLEAR, AND BYPRODUCT MATERIALS AT DOE-OWNED NUCLEAR FACILITIES. INFORMATION CONTAINED HEREIN ON RADIONUCLIDES IS PROVIDED FOR PROCESS DESCRIPTION PURPOSES ONLY.

REFERENCE DRAWINGS

DWG NO	REV	TITLE
24590-HLW-M5-HDH-P0002	0	P&ID - HLW CANISTER DECONTAMINATION HANDLING SYSTEM
24590-WTP-MV-M59T-00001	2	PRESSURE VESSEL TOLERANCES STANDARD DETAILS
24590-WTP-MV-M59T-00007	2	THERMOWELL CONNECTION STANDARD DETAILS
24590-WTP-MV-M59T-00011	1	WASH RINGS STANDARD DETAILS
24590-WTP-MV-M59T-00016001	2	VESSEL CONNECTIONS STANDARD DETAILS SHT 1 OF 3
24590-WTP-MV-M59T-00016002	1	VESSEL CONNECTIONS STANDARD DETAILS SHT 2 OF 3
24590-WTP-MV-M59T-00016003	0	VESSEL CONNECTIONS STANDARD DETAILS SHT 3 OF 3
24590-WTP-MV-M59T-00017	1	VESSEL INSPECTION MANWAY STANDARD DETAILS
24590-WTP-MV-M59T-00012	1	GROUNDING LUG STANDARD DETAILS
24590-WTP-MV-M59T-00009	1	LIFTING LUG STANDARD DETAILS
24590-WTP-MV-M59T-00010	1	TAILING LUG STANDARD DETAILS
24590-HLW-MVD-HDH-P0003	0	MECHANICAL DATA SHEET
24590-WTP-MV-M59T-00018	1	VESSEL NAMEPLATE STANDARD DETAILS
24590-WTP-MV-M59T-00026	1	ANCHOR BOLT CHAIR DETAILS FOR VERTICAL VESSELS

MARK W. HOFFMANN, STATE OF WASHINGTON, 26390, REGISTERED PROFESSIONAL ENGINEER — 3/24/04 — EXPIRES 12/10/04

REVISION HISTORY

REV	DESCRIPTION	ORG	CHKD	RVWD	APVD	DATE
1	ISSUED FOR PERMITTING USE					3/24/04
0	ISSUED FOR PERMITTING USE	JJ	CS	N/A	SK	10/28/02

CM QUALITY LEVEL 1

ISSUED BY BBP-WTP-PDC INIT DATE — ISSUE STAMP

PROJECT No.	24590
SITE	HANFORD
AREA	200E
BUILDING No.	30

	BY	DATE
ORIGINATOR	JESSICA JACKSON	10/22/02
CHECKER	CLIFF SLATER	10/24/02
APPROVER	SUZANNE KIRK	10/28/02
REVIEWER	N/A	

CONTENT APPLICABLE TO ALARA? ☒ YES ☐ NO
ADR NO. N/A REV:

BECHTEL

RIVER PROTECTION PROJECT
WASTE TREATMENT PLANT
2435 STEVENS CENTER PLACE
RICHLAND, WA 99352

CONTRACT No: DE-AC27-01RV14136

EQUIPMENT ASSEMBLY
WASTE NEUTRALIZATION VESSEL
HDH-VSL-00003

SCALE: NONE

24590-HLW-MV-HDH-P0003 REV **1**

R10274441

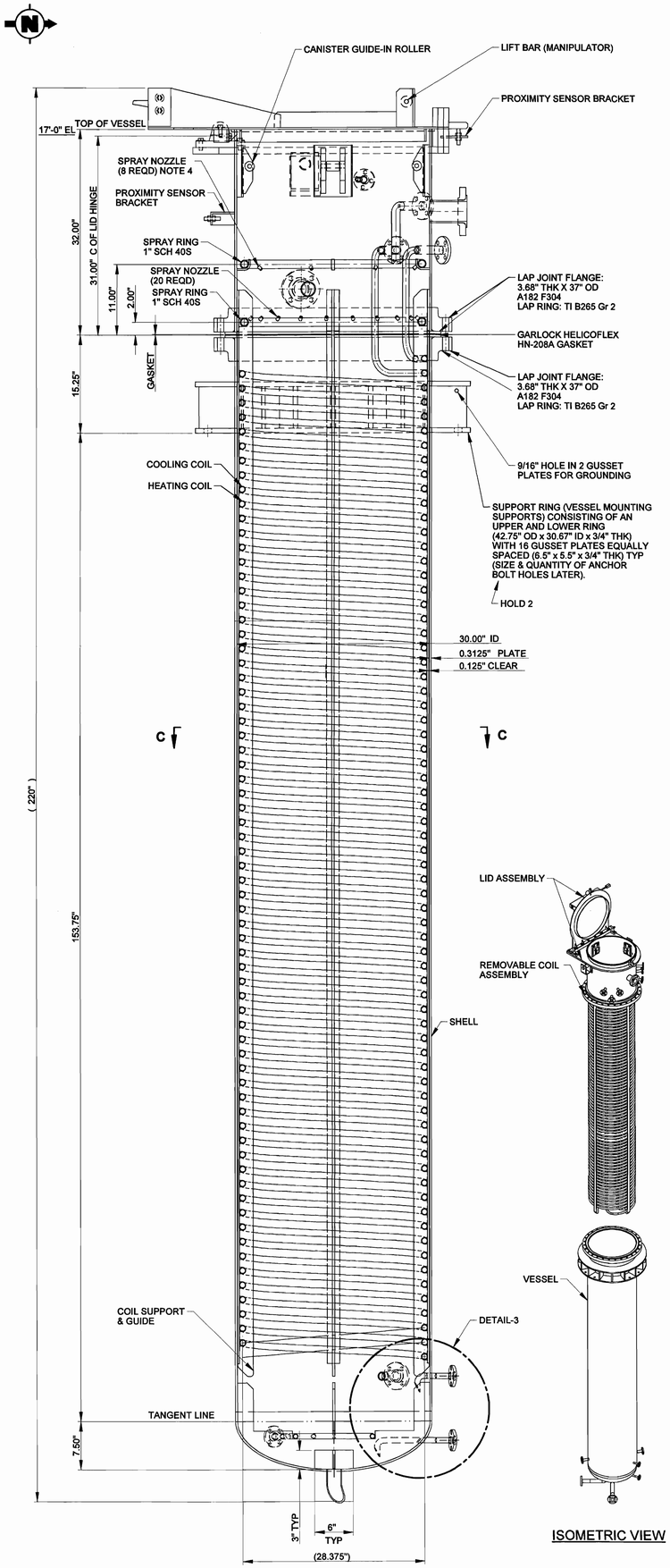

SECTION A-A

ISOMETRIC VIEW

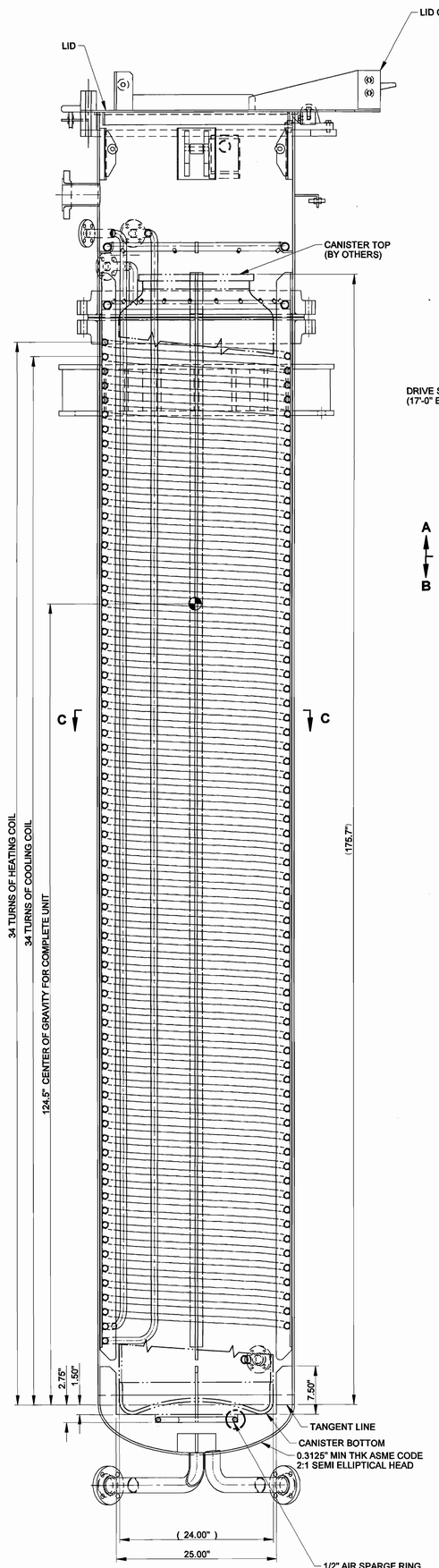

SECTION B-B

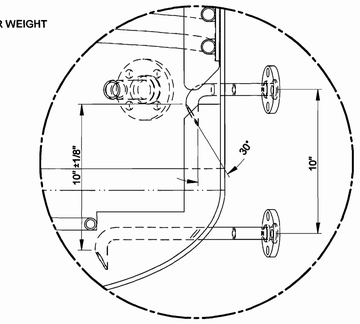

DETAIL 3

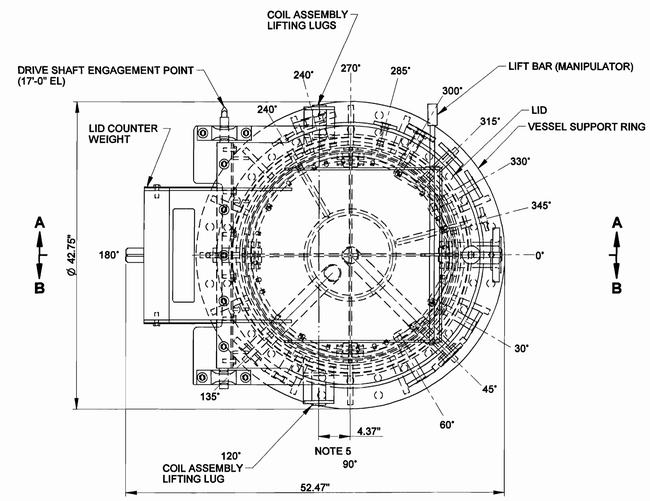

PLAN

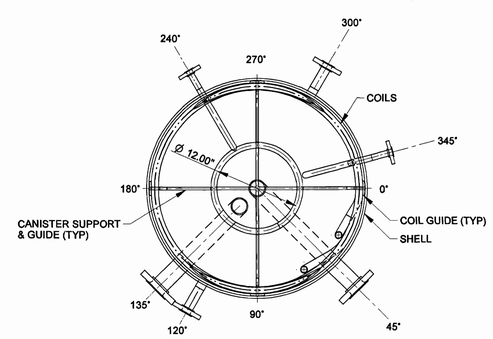

SECTION C-C

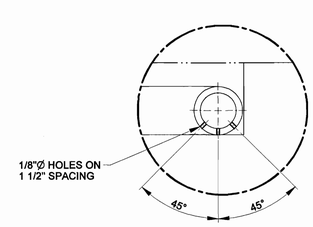

DETAIL 1

GENERAL NOTES:

1. ALL DIMENSIONS ARE IN INCHES UNLESS OTHERWISE SPECIFIED.
2. ALL PIPE CONNECTIONS SHALL BE TERMINATED WITH 150# LAP JOINT FLANGE CONNECTION, TI B-363 GR 2. STUB END, 304 FLANGE
3. HEATING & COOLING COILS SHALL BE 1" O.D. TUBING.
4. SPRAY NOZZLES SHALL BE SPRAYING SYSTEMS 1/4-HH-TI CAPACITY SIZE 10.
5. COIL ASSEMBLY LIFTING LUGS SHALL BE LOCATED COLINEAR WITH THE CENTER OF GRAVITY OF THE COIL AND LID ASSEMBLY.
6. DELETED:
7. SELLER SHALL ENSURE AT LEAST 1/4" CLEARANCE BETWEEN THE SPRAY NOZZLES AND THE 24" OD CANISTER SURFACE.
8. DELETED

HOLD

1. DELETED
2. ANCHOR BOLT HOLE SIZE AND QUANTITY PENDING REVIEW BY CIVIL ENGINEERING
3. DELETED
4. DELETED

PLEASE NOTE THAT SOURCE, SPECIAL NUCLEAR AND BYPRODUCT MATERIALS, AS DEFINED IN THE ATOMIC ENERGY ACT OF 1954 (AEA) ARE REGULATED AT THE U.S. DEPARTMENT OF ENERGY (DOE) FACILITIES EXCLUSIVELY BY DOE ACTING PURSUANT TO ITS AEA AUTHORITY. DOE ASSERTS, THAT PURSUANT TO THE AEA, IT HAS SOLE AND EXCLUSIVE RESPONSIBILITY AND AUTHORITY TO REGULATE SOURCE, SPECIAL NUCLEAR, AND BYPRODUCT MATERIALS AT DOE-OWNED NUCLEAR FACILITIES. INFORMATION CONTAINED HEREIN ON RADIONUCLIDES IS PROVIDED FOR PROCESS DESCRIPTION PURPOSES ONLY.

MARK W. HOFFMANN, STATE OF CALIFORNIA, No. 039993, REGISTERED PROFESSIONAL ENGINEER — 3/24/04 — EXPIRES 12/10/04

REFERENCE DRAWINGS

DWG NO	REV	TITLE
24590-HLW-M6-HDH-P0001	0	P & ID - HLW CANISTER DECONTAMINATION HANDLING SYSTEM
24590-HLW-MV-HDH-P0005	1	EQUIPMENT ASSEMBLY CANISTER DECON VESSEL 1 HDH-VSL-00002 SHEET 2 OF 2
24590-WTP-MV-M69T-00001	2	PRESSURE VESSEL TOLERANCES STANDARD DETAILS
24590-HLW-MVD-HDH-P0006	1	MECHANICAL DATA SHEET
24590-WTP-MV-M69T-00018	1	VESSEL NAME PLATE STANDARD DETAILS

REVISION HISTORY

REV	DESCRIPTION	ORG	CHKD	RVWD	APVD	DATE
1	ISSUED FOR PERMITTING USE	JJ	CS	N/A	SK	3/24/04
0	ISSUED FOR PERMITTING USE	JJ	CS	N/A	SK	10/28/02

CM QUALITY LEVEL 1

ISSUED BY RPP-WTP POC — INIT — DATE — ISSUE STAMP

PROJECT No.	24590	
SITE	HANFORD	
AREA	200-E	
BUILDING No.	30	
	BY	DATE
ORIGINATOR	JESSICA JACKSON	10/22/02
CHECKER	CLIFF SLATER	10/24/02
APPROVER	SUZANNE KIRK	10/28/02
REVIEWER	N/A	

CONTENT APPLICABLE TO ALARA? ☒ YES ☐ NO
ADR NO: N/A REV: N/A

BECHTEL

RIVER PROTECTION PROJECT
WASTE TREATMENT PLANT
2435 STEVENS CENTER PLACE
RICHLAND, WA 99352

CONTRACT No: DE-AC27-01RV14136

EQUIPMENT ASSEMBLY
CANISTER DECON VESSEL 1
HDH-VSL-00002
SHEET 1 OF 2

SCALE: NONE

24590-HLW-MV-HDH-P0004 REV 1

"E" SIZE - 44x34
COMPUTER GENERATED BY SOLID EDGE-MANUAL CHANGES NOT PERMITTED

WHEN REFERENCING DRAWING AND D.M. NUMBERS IN DOCUMENTS, BE SURE TO INCLUDE DASHES BETWEEN ELEMENTS

03/15/2004 12:42 PM

FORM E_MASTER 03/2003

R1027442

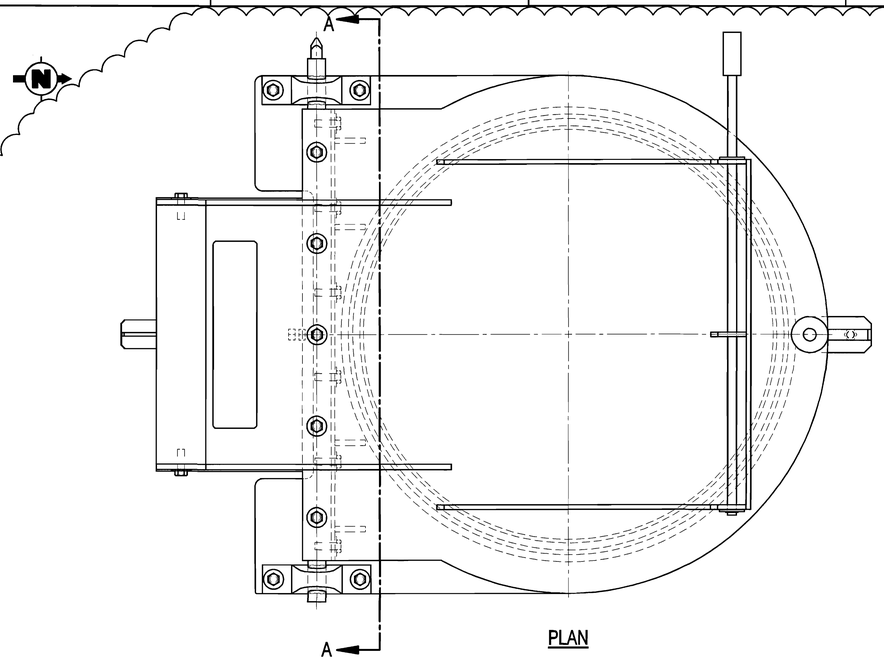

PLAN

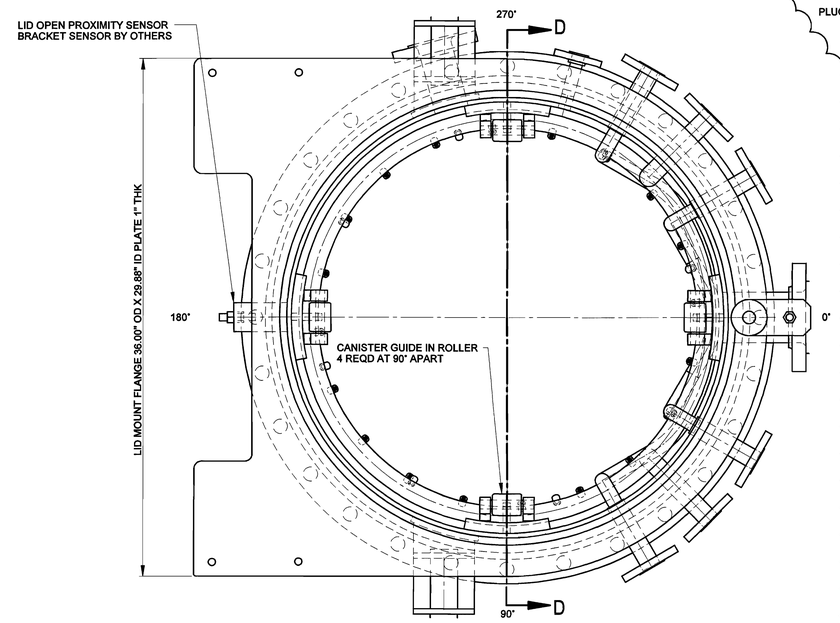

PLAN

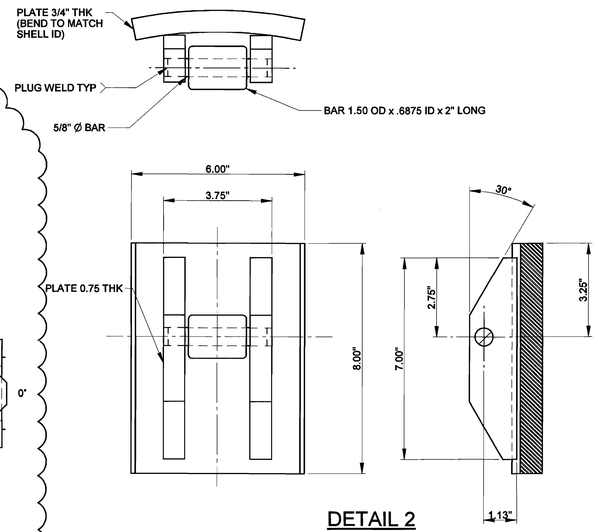

DETAIL 2

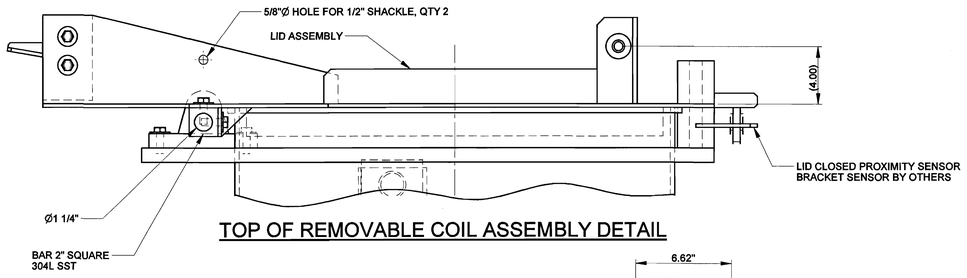

TOP OF REMOVABLE COIL ASSEMBLY DETAIL

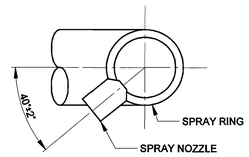

SECTION B-B

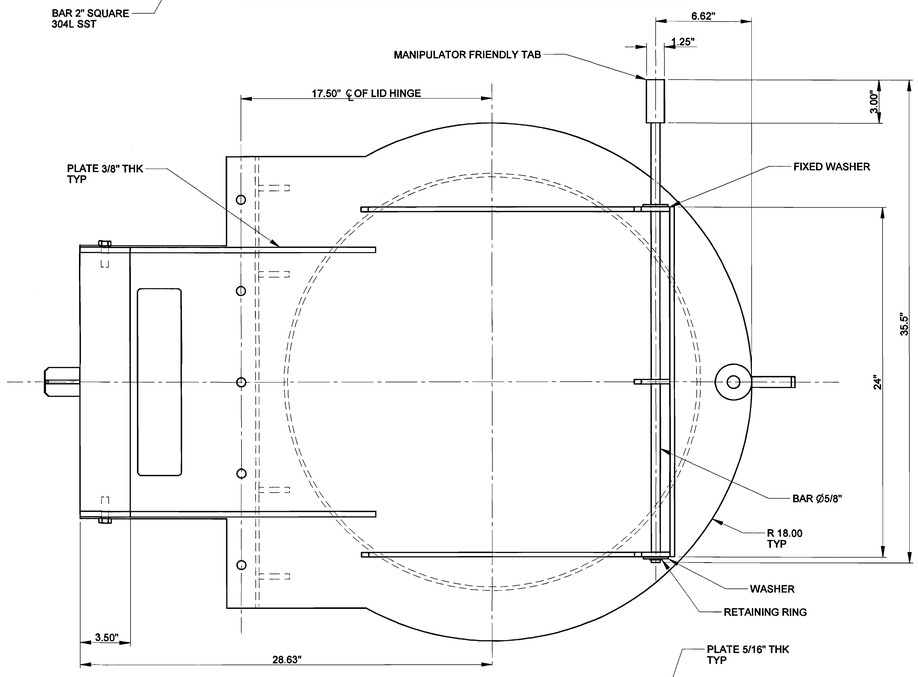

PLAN

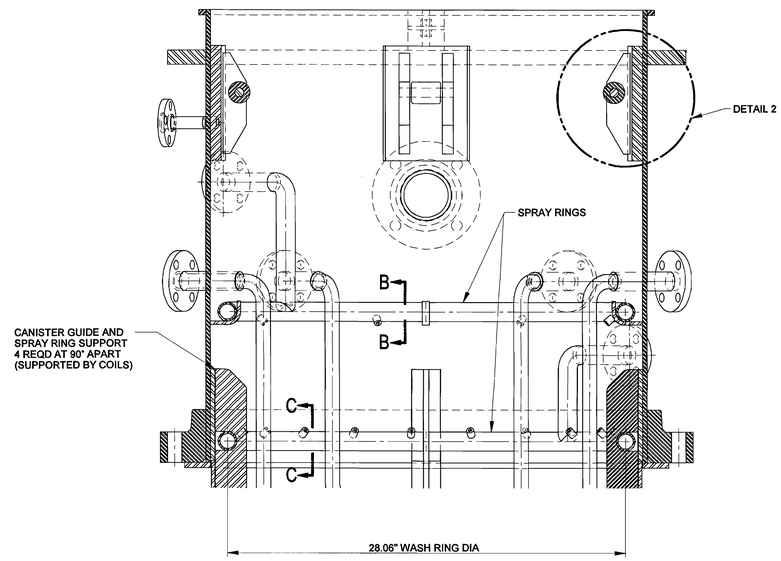

SECTION D-D

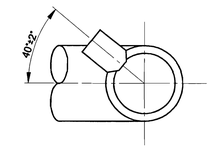

SECTION C-C

GENERAL NOTES:

1. SEE 24590-HLW-MV-HDH-P0004 FOR GENERAL NOTES AND HOLDS.

PLEASE NOTE THAT SOURCE, SPECIAL NUCLEAR AND BYPRODUCT MATERIALS, AS DEFINED IN THE ATOMIC ENERGY ACT OF 1954 (AEA), ARE REGULATED AT THE U.S. DEPARTMENT OF ENERGY (DOE) FACILITIES EXCLUSIVELY BY DOE ACTING PURSUANT TO ITS AEA AUTHORITY. DOE ASSERTS, THAT PURSUANT TO THE AEA, IT HAS SOLE AND EXCLUSIVE RESPONSIBILITY AND AUTHORITY TO REGULATE SOURCE, SPECIAL NUCLEAR, AND BYPRODUCT MATERIALS AT DOE-OWNED NUCLEAR FACILITIES. INFORMATION CONTAINED HEREIN ON RADIONUCLIDES IS PROVIDED FOR PROCESS DESCRIPTION PURPOSES ONLY.

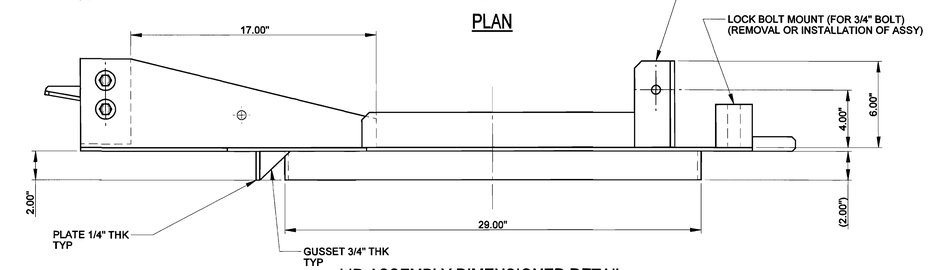

LID ASSEMBLY DIMENSIONED DETAIL

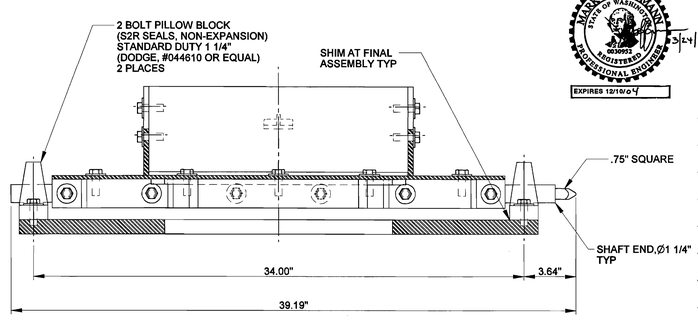

SECTION A-A

MARK W. HOFFMANN STATE OF WASHINGTON 36309053 REGISTERED PROFESSIONAL ENGINEER 3/24/04 EXPIRES 12/19/04

REFERENCE DRAWINGS		
DWG NO	REV	TITLE
24590-HLW-MV-HDH-P0004	1	EQUIPMENT ASSEMBLY CANISTER DECON VESSEL 1
		HDH-VSL-00002 SHEET 1 OF 2

REV	DESCRIPTION	ORG	CHKD	RVWD	APVD	DATE
1	ISSUED FOR PERMITTING USE	JJ	CS	N/A	SK	10/28/02
0	ISSUED FOR PERMITTING USE					

REVISION HISTORY

CM QUALITY LEVEL 1

ISSUED BY RPP-WTP PDC 3/24/04 INIT DATE

ISSUE STAMP

PROJECT No.	24590	
SITE	HANFORD	
AREA	200-E	
BUILDING No.	30	
	BY	DATE
ORIGINATOR	JESSICA JACKSON	10/22/02
CHECKER	CLIFF SLATER	10/24/02
APPROVER	SUZANNE KIRK	10/28/02
REVIEWER	N/A	

CONTENT APPLICABLE TO ALARA? YES ☐ NO ☐
ADR NO. N/A REV:

BECHTEL

RIVER PROTECTION PROJECT
WASTE TREATMENT PLANT
2435 STEVENS CENTER PLACE
RICHLAND, WA 99352

CONTRACT No: DE-AC27-01RV14136

EQUIPMENT ASSEMBLY
CANISTER DECON VESSEL 1
HDH-VSL-00002
SHEET 2 OF 2

SCALE: NONE

24590-HLW-MV-HDH-P0005 REV 1

FORM E_MASTER 03/2003

"E" SIZE - 44x34
COMPUTER GENERATED BY SOLID EDGE-MANUAL CHANGES NOT PERMITTED

WHEN REFERENCING DRAWING AND DIM NUMBERS IN DOCUMENTS, BE SURE TO INCLUDE DASHES BETWEEN ELEMENTS

03/15/2004 12:46 PM

R1027 4443

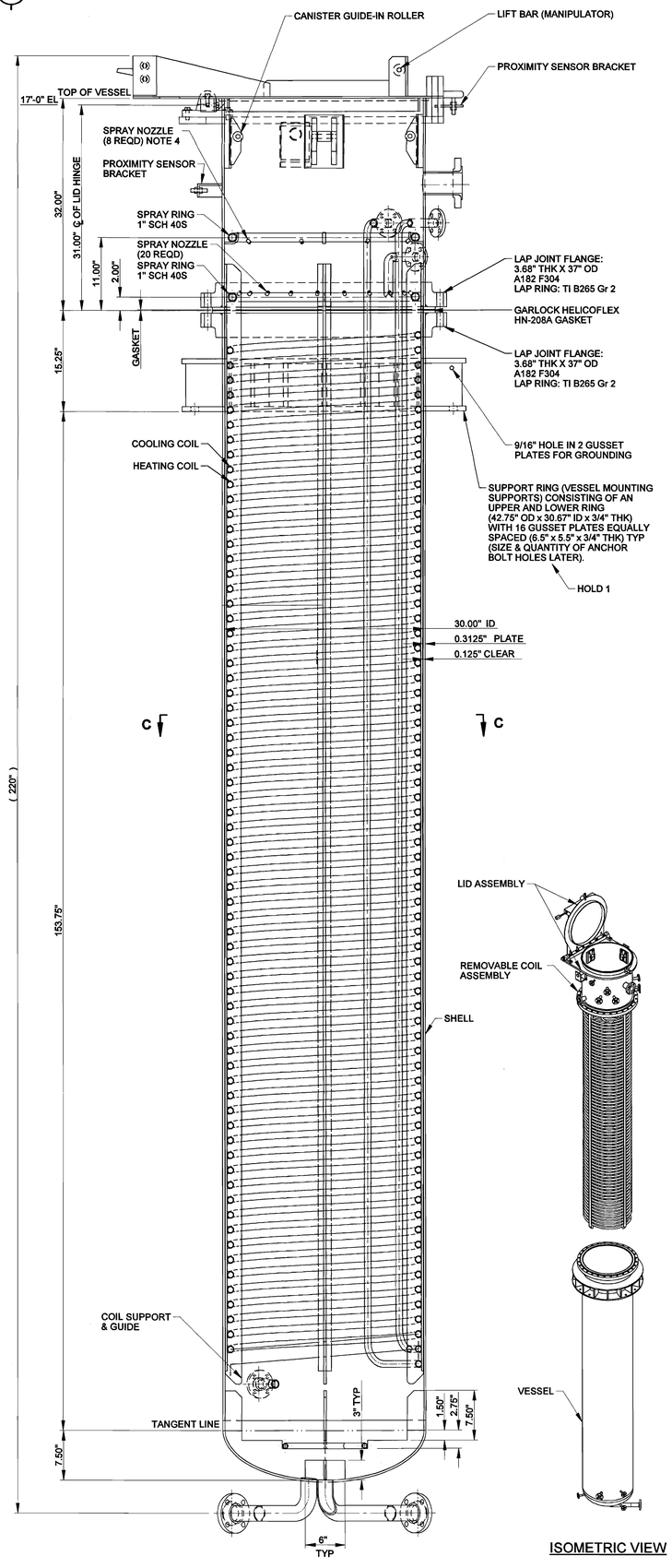

ISOMETRIC VIEW

SECTION A-A

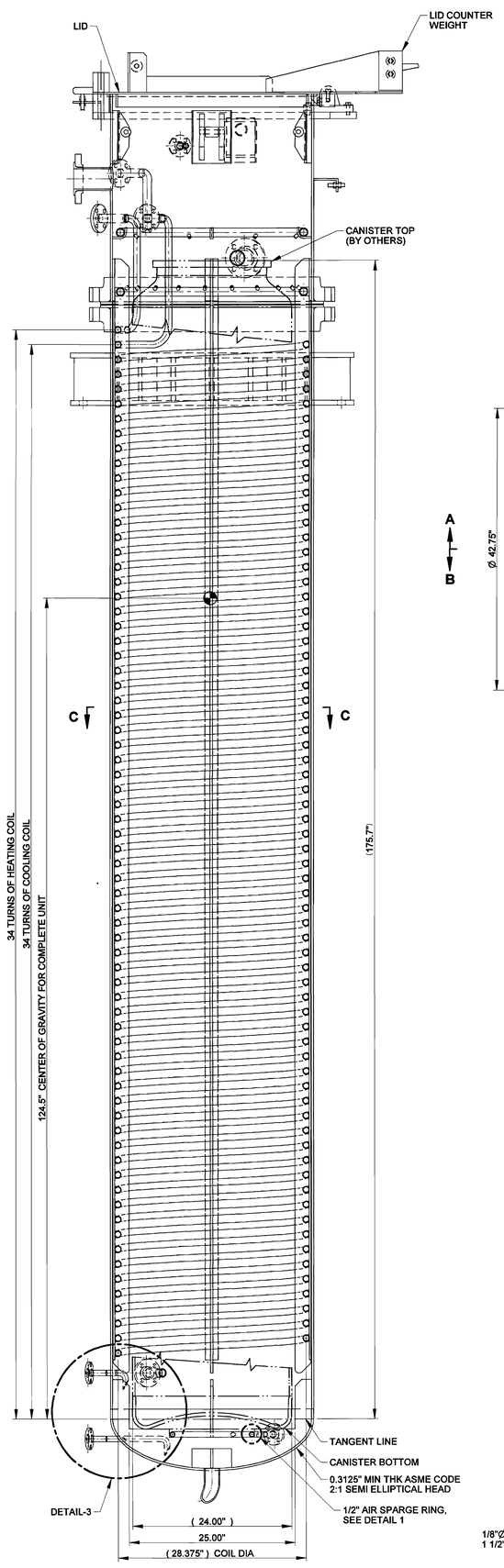

SECTION B-B

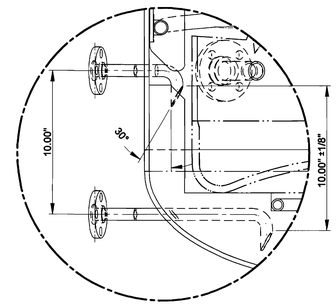

DETAIL 3

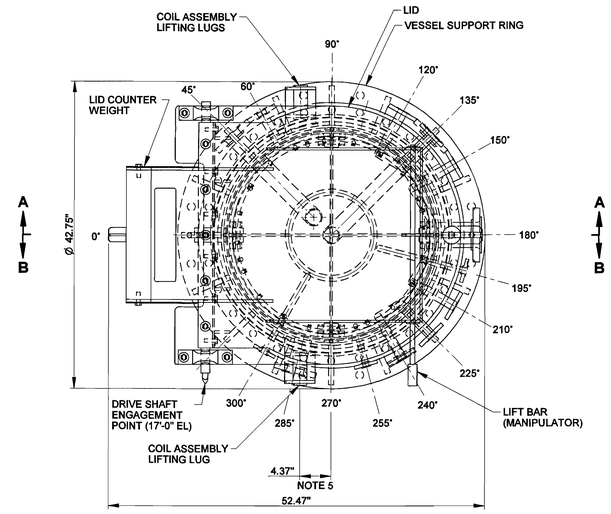

PLAN

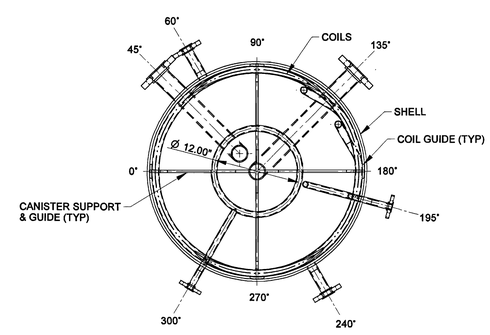

SECTION C-C

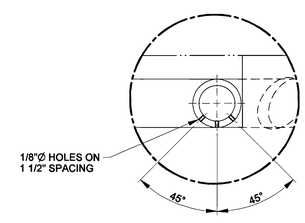

DETAIL 1

GENERAL NOTES:

1. ALL DIMENSIONS ARE IN INCHES UNLESS OTHERWISE SPECIFIED.
2. ALL PIPE CONNECTIONS SHALL BE TERMINATED WITH 150# LAP JOINT FLANGE CONNECTION, TI B-363 GR 2. STUB END, 304 FLANGE
3. HEATING & COOLING COILS SHALL BE 1" O.D. TUBING.
4. SPRAY NOZZLES SHALL BE SPRAYING SYSTEMS 1/4-HH-TI CAPACITY SIZE 10.
5. COIL ASSEMBLY LIFTING LUGS SHALL BE LOCATED COLINEAR WITH THE CENTER OF GRAVITY OF THE COIL AND LID ASSEMBLY.
6. SELLER SHALL ENSURE AT LEAST 1/4" CLEARANCE BETWEEN THE SPRAY NOZZLES AND THE 24" OD CANISTER SURFACE.
7. DELETED

HOLD

1. ANCHOR BOLT HOLE SIZE AND QUANTITY PENDING REVIEW BY CIVIL ENGINEERING
2. DELETED

PLEASE NOTE THAT SOURCE, SPECIAL NUCLEAR AND BYPRODUCT MATERIALS, AS DEFINED IN THE ATOMIC ENERGY ACT OF 1954 (AEA), ARE REGULATED AT THE U.S. DEPARTMENT OF ENERGY (DOE) FACILITIES EXCLUSIVELY BY DOE ACTING PURSUANT TO ITS AEA AUTHORITY. DOE ASSERTS, THAT PURSUANT TO THE AEA, IT HAS SOLE AND EXCLUSIVE RESPONSIBILITY AND AUTHORITY TO REGULATE SOURCE, SPECIAL NUCLEAR, AND BYPRODUCT MATERIALS AT DOE-OWNED NUCLEAR FACILITIES. INFORMATION CONTAINED HEREIN ON RADIONUCLIDES IS PROVIDED FOR PROCESS DESCRIPTION PURPOSES ONLY.

MARK W. HOEFLAND, STATE OF WASHINGTON, 0030953, REGISTERED PROFESSIONAL ENGINEER — 3/24/04 — EXPIRES 12/10/04

REFERENCE DRAWINGS

DWG NO	REV	TITLE
24590-HLW-M6-HDH-P20001	0	P & ID - HLW CANISTER DECONTAMINATION HANDLING SYSTEM
24590-HLW-MV-HDH-P0007	0	EQUIPMENT ASSEMBLY CANISTER DECON VESSEL 2 HDH-VSL-00004 SHEET 2 OF 2
24590-WTP-MV-M59T-00001	2	PRESSURE VESSEL TOLERANCES STANDARD DETAILS
24590-HLW-MMD-HDH-P0012	0	MECHANICAL DATA SHEET
24590-WTP-MV-M59T-00018	1	VESSEL NAME PLATE STANDARD DETAILS

REV	DESCRIPTION	ORG	CHKD	RVWD	APVD	DATE
0	ISSUED FOR PERMITTING USE					3/24/04

REVISION HISTORY

CM QUALITY LEVEL

ISSUED BY RPP-WTP PDC ENGINEERING INIT DATE — ISSUE STAMP

PROJECT No.	24590
SITE	HANFORD
AREA	200-E
BUILDING No.	30

	BY	DATE
ORIGINATOR		3/15/04
CHECKER		3/15/04
APPROVER		3/24/04
REVIEWER		3/18/04

CONTENT APPLICABLE TO ALARA? [X] YES [ ] NO

ADR NO. N/A REV:

BECHTEL

RIVER PROTECTION PROJECT
WASTE TREATMENT PLANT
2435 STEVENS CENTER PLACE
RICHLAND, WA 99352

CONTRACT No: DE-AC27-01RV14136

EQUIPMENT ASSEMBLY CANISTER DECON VESSEL 2 HDH-VSL-00004 SHEET 1 OF 2

SCALE: NONE

24590-HLW-MV-HDH-P0006 — REV 0

R1027444

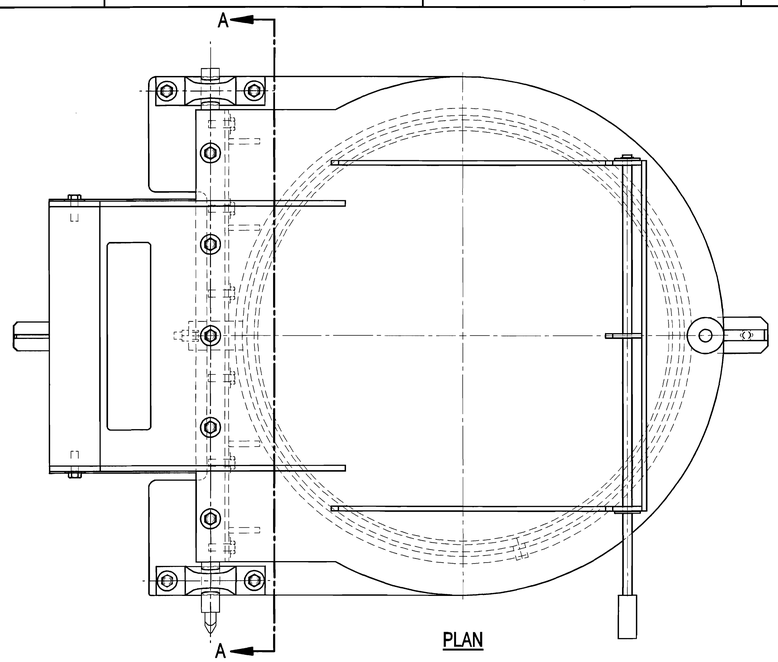

PLAN

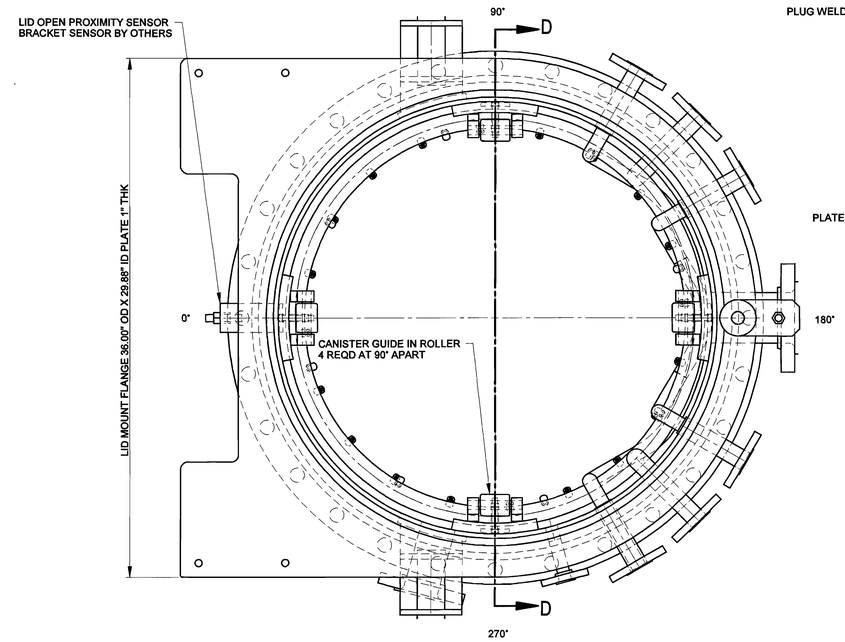

PLAN

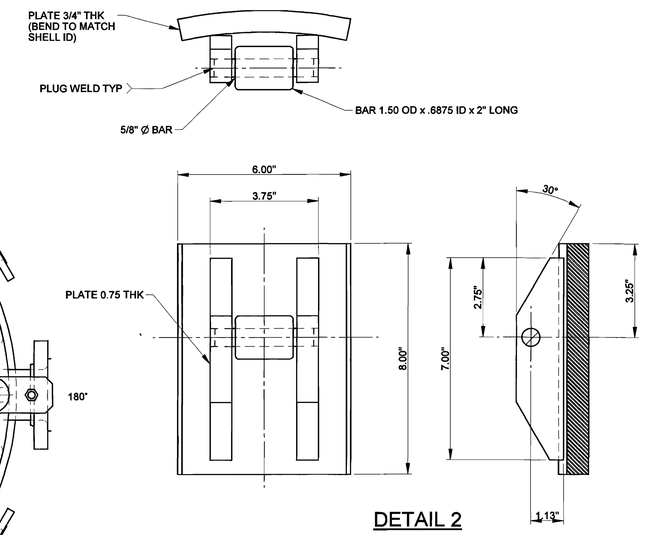

DETAIL 2

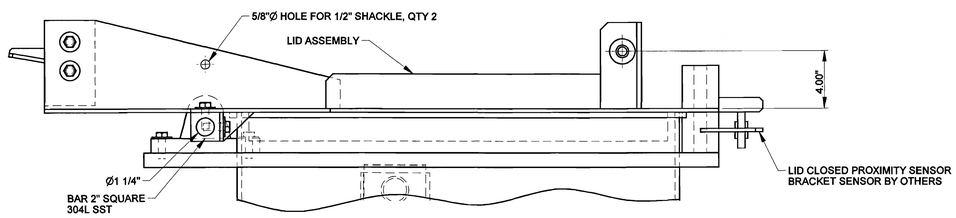

TOP OF REMOVABLE COIL ASSEMBLY DETAIL

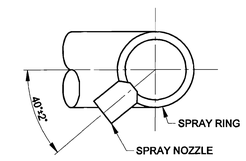

SECTION B-B

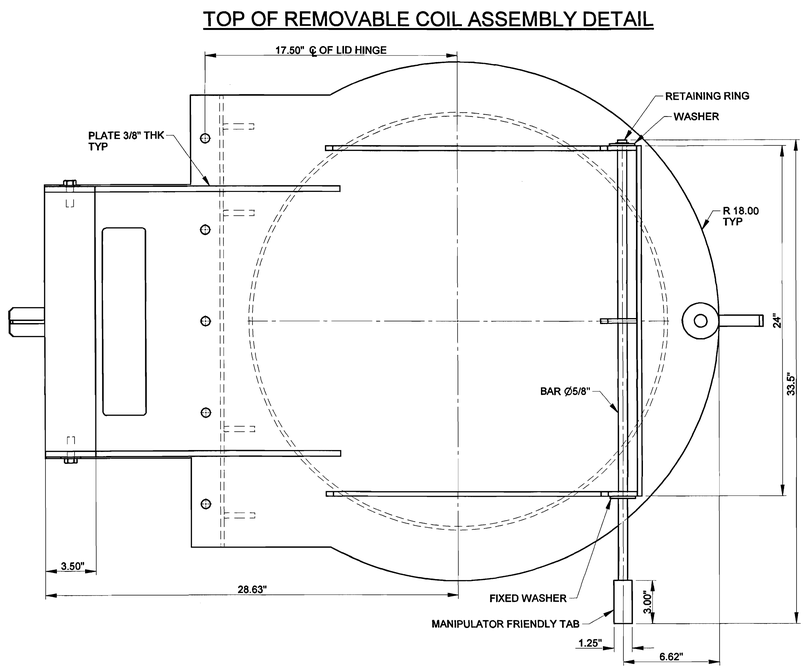

PLAN

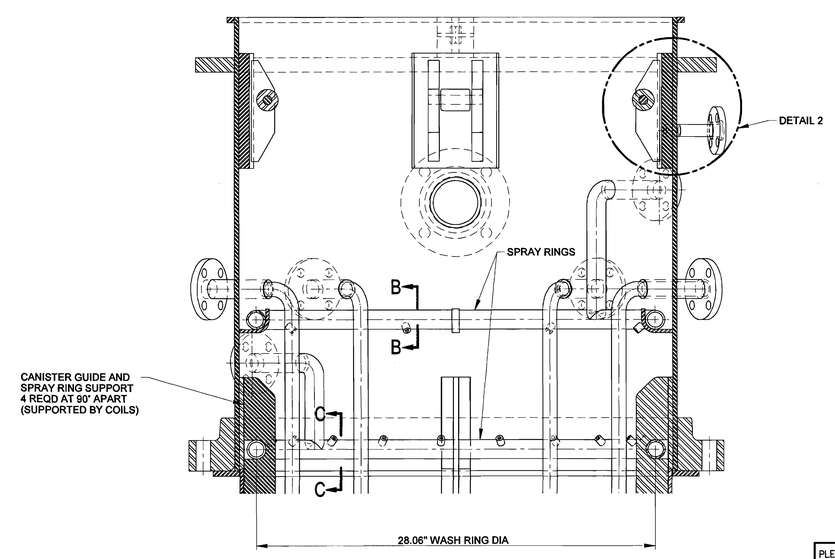

SECTION D-D

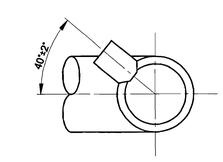

SECTION C-C

GENERAL NOTES:

1. SEE 24590-HLW-MV-HDH-P0006 FOR GENERAL NOTES AND HOLDS.

PLEASE NOTE THAT SOURCE, SPECIAL NUCLEAR AND BYPRODUCT MATERIALS, AS DEFINED IN THE ATOMIC ENERGY ACT OF 1954 (AEA) ARE REGULATED AT THE U.S. DEPARTMENT OF ENERGY (DOE) FACILITIES EXCLUSIVELY BY DOE ACTING PURSUANT TO ITS AEA AUTHORITY. DOE ASSERTS, THAT PURSUANT TO THE AEA, IT HAS SOLE AND EXCLUSIVE RESPONSIBILITY AND AUTHORITY TO REGULATE SOURCE, SPECIAL NUCLEAR, AND BYPRODUCT MATERIALS AT DOE-OWNED NUCLEAR FACILITIES. INFORMATION CONTAINED HEREIN ON RADIONUCLIDES IS PROVIDED FOR PROCESS DESCRIPTION PURPOSES ONLY.

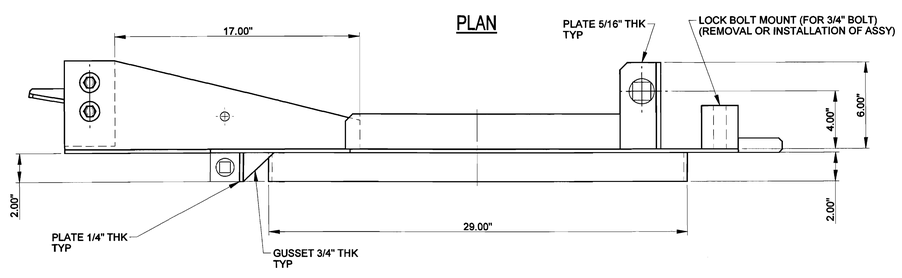

LID ASSEMBLY DIMENSIONED DETAIL

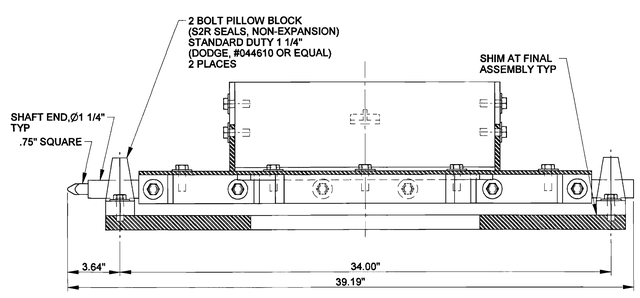

SECTION A-A

MARK W. HOFFMANN STATE OF WASHINGTON 9030953 REGISTERED PROFESSIONAL ENGINEER 3/24/04
EXPIRES 12/10/04

REFERENCE DRAWINGS		
DWG NO	REV	TITLE
24590-HLW-MV-HDH-P0006	0	EQUIPMENT ASSEMBLY CANISTER DECON VESSEL 2
		HDH-VSL-00004 SHEET 1 OF 2

REVISION HISTORY							
REV	DESCRIPTION	ORG	CHKD	RVWD	APVD	DATE
0	ISSUED FOR PERMITTING					3/24/04

CM QUALITY LEVEL

ISSUED BY BECHTEL NATIONAL, INC. INIT DATE ISSUE STAMP

PROJECT No.	24590	
SITE	HANFORD	
AREA	200-E	
BUILDING No.	30	
	BY	DATE
ORIGINATOR		3/15/04
CHECKER		3/15/04
APPROVER		3/24/04
REVIEWER		3/18/04

CONTENT APPLICABLE TO ALARA? [X] YES [ ] NO [ ]
ADR NO. N/A REV:

RIVER PROTECTION PROJECT
WASTE TREATMENT PLANT
2435 STEVENS CENTER PLACE
RICHLAND, WA 99352

CONTRACT No: DE-AC27-01RV14136

EQUIPMENT ASSEMBLY
CANISTER DECON VESSEL 2
HDH-VSL-00004
SHEET 2 OF 2

SCALE: NONE

24590-HLW-MV-HDH-P0007 REV **0**

FORM E_MASTER 03/2003

"E" SIZE - 44x34
COMPUTER GENERATED BY SOLID EDGE-
MANUAL CHANGES NOT PERMITTED

WHEN REFERENCING DRAWING AND DIM NUMBERS IN DOCUMENTS, BE SURE TO INCLUDE DASHES BETWEEN ELEMENTS

03/15/2004 12:33 PM

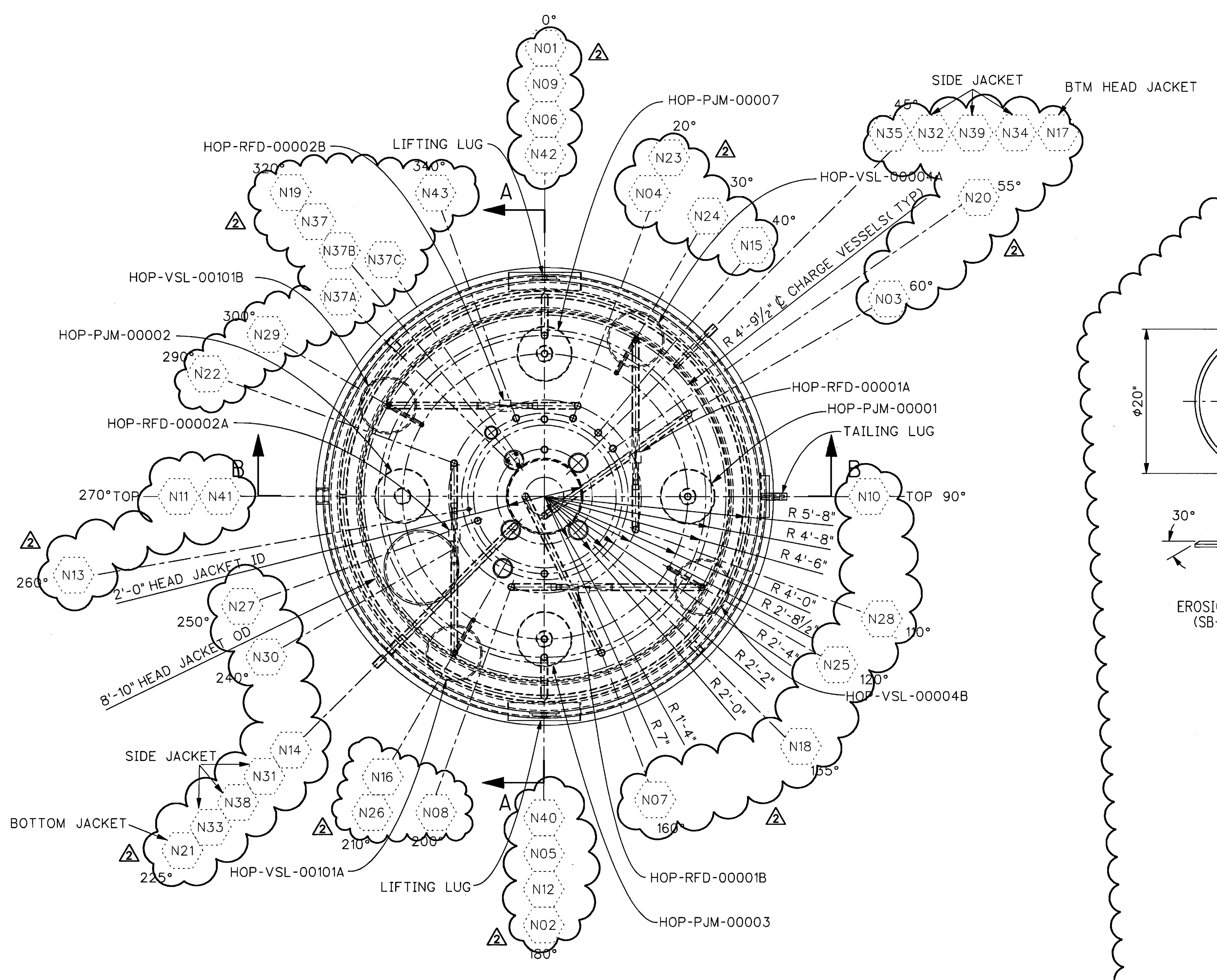

PLAN

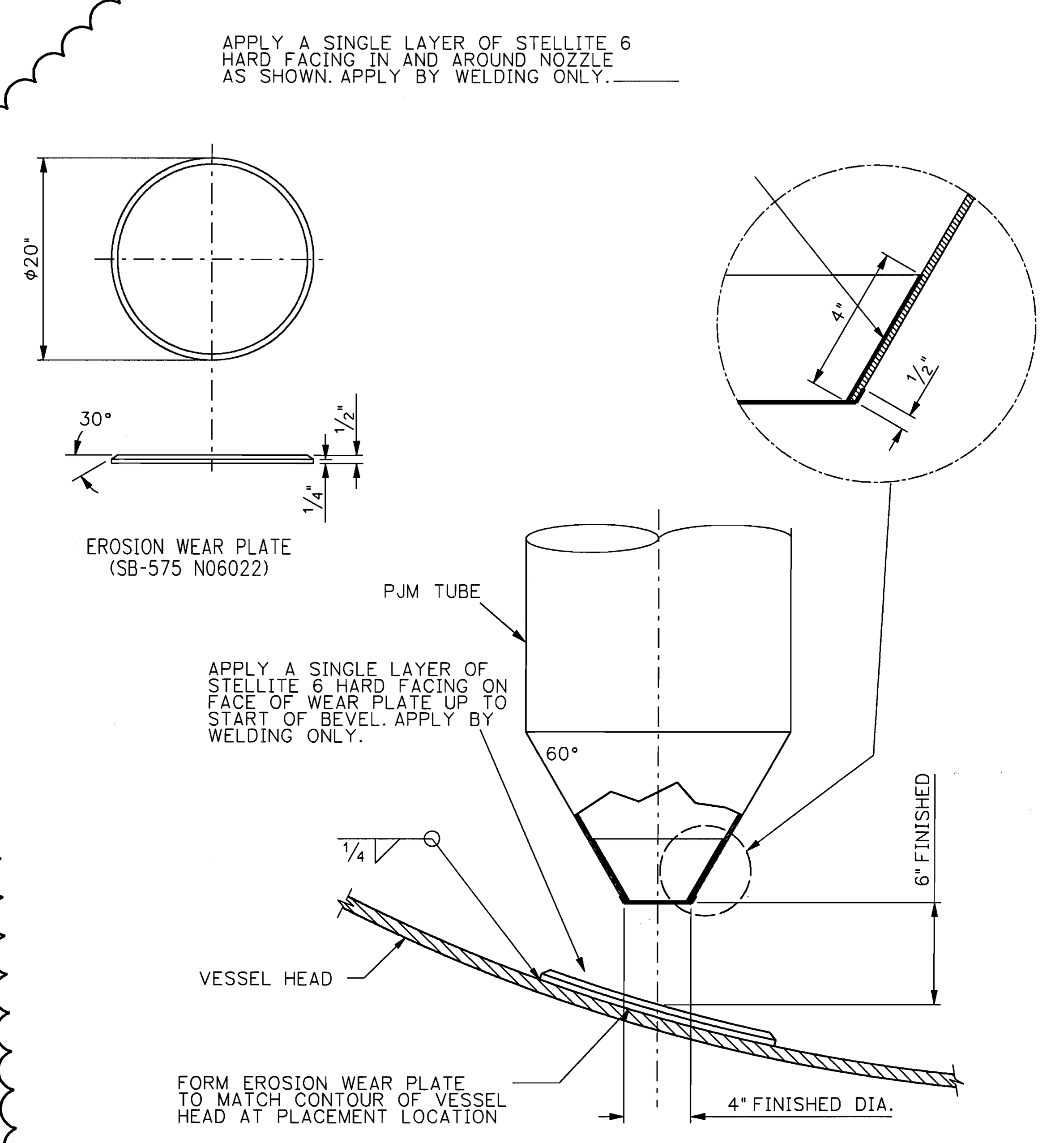

PULSE JET MIXERS

DETAIL 1

NOZZLE	SIZE	SCHED/WALL	SERVICE/REMARKS	"Z" DIM	REF DWG/DET	CONN PIPE SIZE/SCHED
N01	2"	80S	PLANT WASH	10'-7"	24590-WTP-MV-M59T-00016001 DET 3	2"-40S
N02	2"	80S	PLANT WASH	10'-7"	24590-WTP-MV-M59T-00016001 DET 3	2"-40S
N03	2"	80S	STEAM SUPPLY TO HOP-EJCTR-00003A	10'-7"	24590-WTP-MV-M59T-00016001 DET 3	2"-40S
N04	2"	80S	SPARE	11'-4"	24590-WTP-MV-M59T-00016001DET 2	2"-40S
N05	2"	160S	SPARE (DIP LEG)	11'-4"	24590-WTP-MV-M59T-00016001 DET 4	2"-40S
N06	2"	160S	SPARE (DIP LEG)	11'-4"	24590-WTP-MV-M59T-00016001 DET 4	2"-40S
N07	2"	80S	STEAM SUPPLY TO HOP-EJCTR-00003B	10'-7"	24590-WTP-MV-M59T-00016001 DET 3	2"-40S
N08	2"	160S	SBS CONDENSATE RECYCLE TO HOP-SCB-00001	11'-4"	24590-WTP-MV-M59T-00016 DET 3	2"-40S
N09	2"	160S	FLUIDIC MIXER SUPPLY AIR TO HOP-PJM-00007	10'-10"	24590-WTP-MV-M59T-00016 DET 3	2"-40S
N10	2"	160S	FLUIDIC MIXER SUPPLY AIR TO HOP-PJM-00001	10'-10"	24590-WTP-MV-M59T-00016 DET 3	2"-40S
N11	2"	160S	FLUIDIC MIXER SUPPLY AIR TO HOP-PJM-00002	10'-10"	24590-WTP-MV-M59T-00016 DET 3	2"-40S
N12	2"	160S	FLUIDIC MIXER SUPPLY AIR TO HOP-PJM-00003	10'-10"	24590-WTP-MV-M59T-00016001 DET 3	2"-40S
N13	1"	160S	THERMOWELL	11'-4"	24590-WTP-MV-M59T-00007	1"-10S
N14	6"	⅜" PLATE	RADAR WAVE GUIDE CONE NOZZLE	11'-2"	24590-WTP-MV-M59T-00016001 DET 2	6"-40S
N14A			DELETED			
N14B			DELETED			
N14C			DELETED			
N15	2"	160S	HEME DRAIN FROM HOP-HEME-00001A (DIP LEG)	11'-4"	24590-WTP-MV-M59T-00016001 DET 4	2"-40S
N16	6"	⅜" PLATE	WESP DRAIN FROM HOP-WESP-00001 (DIP LEG)	11'-4"	24590-WTP-MV-M59T-00016001 DET 4	6"-40S
N17	3"	160S	COOLING WATER RETURN, BOTTOM HEAD JACKET	(-) 2'-9$\frac{15}{16}$"	24590-WPT-MV-M59T-00016001 DET 1	3"-40S
N18	6"	⅜" PLATE	RADAR WAVE GUIDE CONE NOZZLE	11'-2"	24590-WTP-MV-M59T-00016001 DET 2	6"-40S
N18A			DELETED			
N18B			DELETED			
N18C			DELETED			
N19	6"	⅜" PLATE	SBS CONDENSATE INLET FROM HOP-SCB-00001	11'-4"	24590-WTP-MV-M59T-00016001 DET 2	6"-10S
N20	2"	80S	SPARE	11'-4"	24590-WTP-MV-M59T-00016001 DET 2	2"-40S
N21	3"	160S	COOLING WATER SUPPLY, BOTTOM HEAD JACKET	(-) 3'-9"	24590-WTP-MV-M59T-00017 DET 1	3"-40S
N22	2"	160S	RFD DISCHARGE SBS RECYCLE TO HOP-SCB-00001	11'-4"	24590-WTP-MV-M59T-00016001 DET 3	2"-40S
N23	2"	160S	RFD DISCHARGE SBS RECYCLE TO HOP-SCB-00001	11'-4"	24590-WTP-MV-M59T-00016001 DET 3	2"-40S
N24	1½"	160S	RFD SUPPLY AIR TO HOP-VSL-00004A	11'-10"	24590-WTP-MV-M59T-00016001 DET 3	1½"-40S
N25	1½"	160S	RFD SUPPLY AIR TO HOP-VSL-00004B	11'-10"	24590-WTP-MV-M59T-00016001 DET 3	1½"-40S
N26	1½"	160S	RFD SUPPLY AIR TO HOP-VSL-00101A	11'-10"	24590-WTP-MV-M59T-00016001 DET 3	1½"-40S
N27	2"	80S	VENT TO HOP-SCB-00001	11'-4"	24590-WTP-MV-M59T-00016001 DET 1	2"-40S
N28	2"	160S	RFD DISCHARGE SBS RECYCLE TO HOP-SCB-00001	11'-4"	24590-WTP-MV-M59T-00016001 DET 3	2"-40S
N29	1½"	160S	RFD SUPPLY AIR TO HOP-VSL-00101B	11'-10"	24590-WTP-MV-M59T-00016001 DET 3	1½"-40S
N30	24"	½" PLATE	MANWAY	10'-10"	24590-WTP-MV-M59T-00017 DET 2	N/A
N31	3"	80S	COOLING WATER SUPPLY, UPPER SHELL	5"-1⅛"	24590-WTP-MV-M59T-00016001 DET 1	3"-40S
N32	3"	80S	COOLING WATER RETURN, UPPER SHELL	6'-3⅛"	24590-WTP-MV-M59T-00016001 DET 1	3"-40S
N33	3"	80S	COOLING WATER SUPPLY, LOWER SHELL	9⅜"	24590-WTP-MV-M59T-00016001 DET 1	3"-40S
N34	3"	80S	COOLING WATER RETURN, LOWER SHELL	1'-10⅝"	24590-WTP-MV-M59T-00016001 DET 1	3"-40S
N35	6"	⅜" PLATE	RADAR WAVE GUIDE CONE NOZZLE	11'-2"	24590-WTP-MV-M59T-00016001 DET 2	6"-40S
N37	6"	⅜" PLATE	INSTRUMENT	11'-2"	24590-WTP-MV-M59T-00016002 DET 19	N/A
N37A	1"	160S	BALANCE	11'-8"	24590-WTP-MV-M59T-00016002 DET 19	1"-40S
N37B	1"	160S	DENSITY (DIP LEG)	11'-8"	24590-WTP-MV-M59T-00016002 DET 19	1"-40S
N37C	1"	160S	LEVEL (DIP LEG)	11'-8"	24590-WTP-MV-M59T-00016002 DET 19	1"-40S
N38	3"	80S	COOLING WATER SUPPLY CENTER SHELL	2'-11⅝"	24590-WTP-MV-M59T-00016001 DET 1	3"-40S
N39	3"	80S	COOLING WATER RETURN, CENTER SHELL	4'-0⅞"	24590-WTP-MV-M59T-00016001 DET 1	3"-40S
N40	2"	80S	CONDENSATE DISCHARGE FROM HOP-EJCTR-00003A	11'-4"	24590-WTP-MV-M59T-00016001 DET 3	2"-40S
N41	2"	80S	CONDENSATE DISCHARGE FROM HOP-EJCTR-00003B	11'-4"	24590-WTP-MV-M59T-00016001 DET 3	2"-40S
N42	1"	160S	THERMOWELL (SPARE)	11'-4"	24590-WTP-MV-M59T-00007	1"-10S
N43	2"	160S	DRAIN FROM HOP-HEME-00001B (DIP LEG)	11'-4"	24590-WTP-MV-M59T-00016001 DET 4	2"-40S

GENERAL NOTES:

1. ALL ANCHOR BOLT HOLES SHALL STRADDLE VESSEL NATURAL CENTER LINE.
2. RFD PUMP UNITS WILL BE SUPPLIED BY OTHERS FOR SELLER TO FIT INTO THE DELIVERY PIPE WORK BETWEEN THE CHARGE VESSEL AND THE PARENT VESSEL TOP HEAD. ALL OTHER INTERNALS INCLUDING: PULSE JET MIXERS, CHARGE VESSELS, PIPE WORK AND SUPPORTING STRUCTURE TO BE SUPPLIED AND FITTED BY THE SELLER.
3. FOR DISTANCE OF DIP LEGS TO BOTTOM HEAD USE 2" CLEARANCE, UNLESS OTHERWISE SPECIFIED.
4. SELLER TO STAY THE JACKETED PORTION OF THE BOTTOM HEAD PER ASME VIII DIV 1 FIG UW-19-2 USING 1" ϕ STAYS ON 1⅛" SQ PITCH CENTERS.
5. "Z" DIMENSION FOR SHELL NOZZLES MEASURED FROM CENTER LINE OF NOZZLE FACE.
6. REVISED:
   A) NOZZLE TABLE BASED ON P&ID REVISION.
   B) DELETED
   C) RESOLVED & DELETED ALL THE HOLD ITEMS.
   D) DELETED
7. REFER TO 24590-HLW-M6-HOP-P0004 AND 24590-HLW-M6-HOP-P0006 FOR INFORMATION ON THE NOZZLE CONFIGURATION SHOWN IN PHANTOM.

PLEASE NOTE THAT SOURCE, SPECIAL NUCLEAR AND BYPRODUCT MATERIALS, AS DEFINED IN THE ATOMIC ENERGY ACT OF 1954 (AEA), ARE REGULATED AT THE U.S. DEPARTMENT OF ENERGY (DOE) FACILITIES EXCLUSIVELY BY DOE ACTING PURSUANT TO ITS AEA AUTHORITY. DOE ASSERTS, THAT PURSUANT TO THE AEA, IT HAS SOLE AND EXCLUSIVE RESPONSIBILITY AND AUTHORITY TO REGULATE SOURCE, SPECIAL NUCLEAR, AND BYPRODUCT MATERIAL AT DOE-OWNED NUCLEAR FACILITIES. INFORMATION CONTAINED HEREIN ON RADIONUCLIDES IS PROVIDED FOR PROCESS DESCRIPTION PURPOSES ONLY.

THIS DRAWING TO BE READ IN CONJUNCTION WITH THE MECHANICAL DATA SHEET 24590-HLW-MVD-HOP-P0001.

QUALITY LEVEL DESIGNATION FOR ALL COMPONENTS OF THIS VESSEL WILL BE QL-1

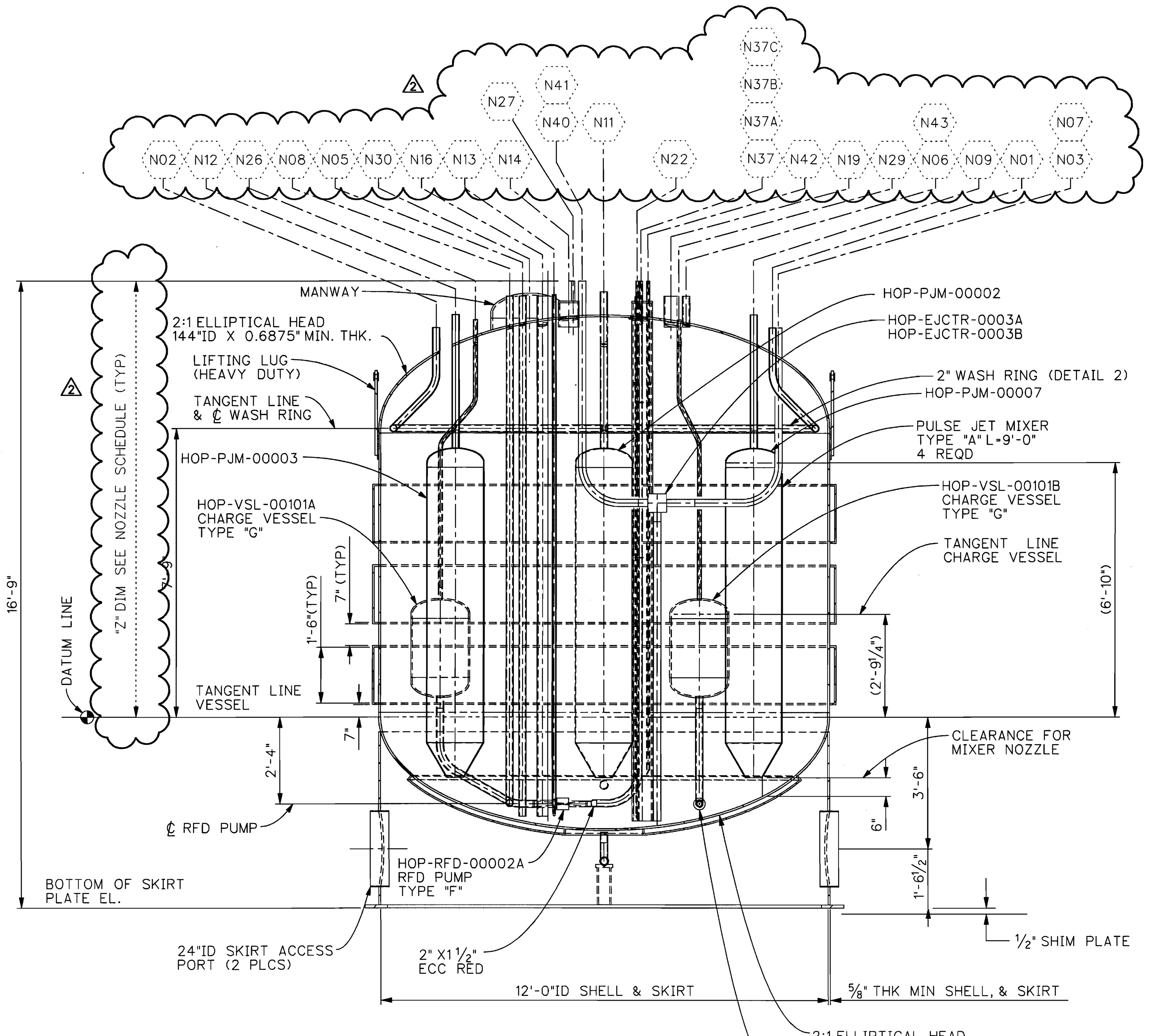

SECTION A-A

SEE PLAN FOR TRUE ORIENATION

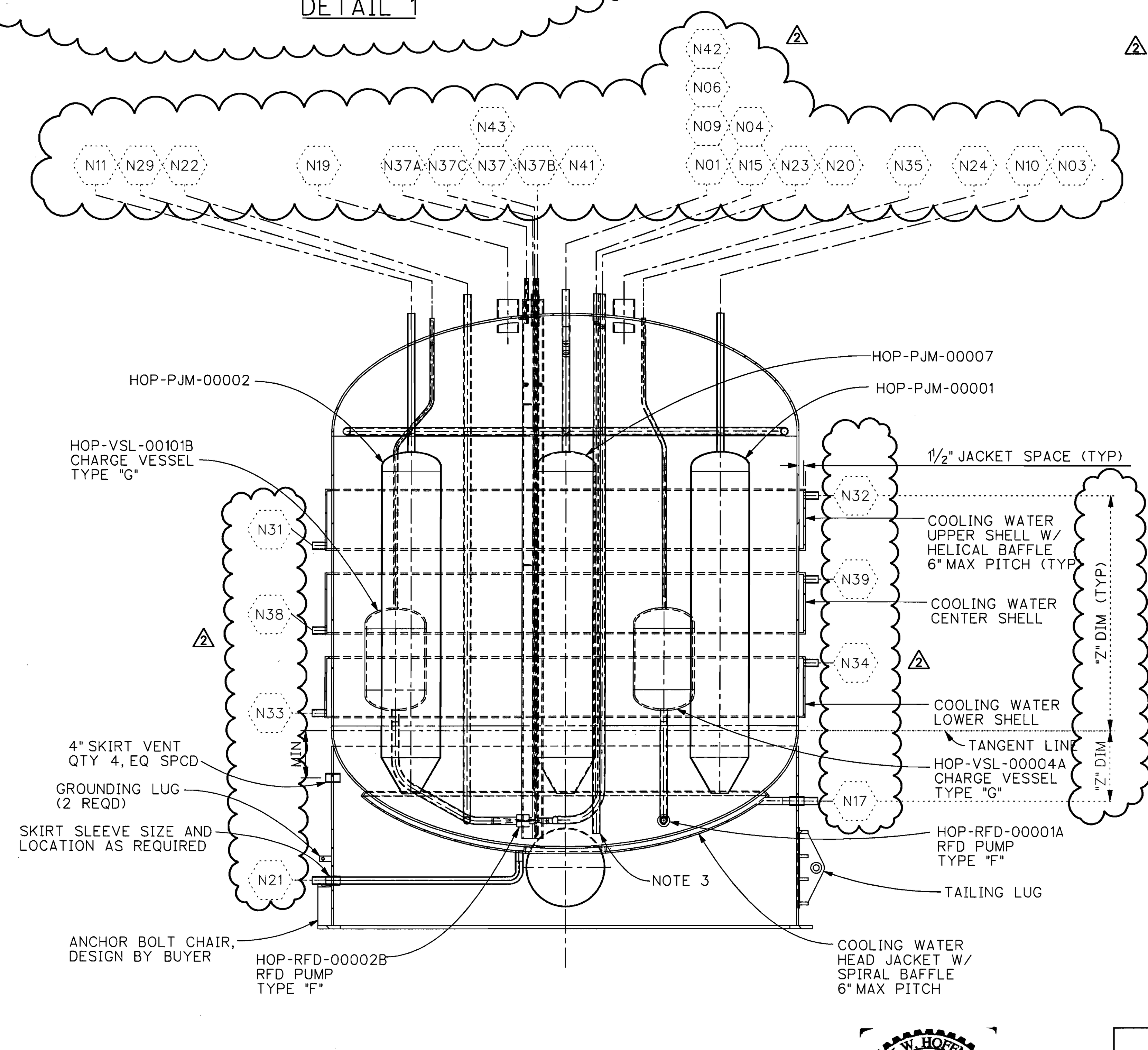

SECTION B-B

REFERENCE DRAWINGS		
DWG NO	REV	TITLE
24590-HLW-M6-HOP-P0004		P&ID (HLW MELTER / OFFGAS FLUIDIC AIR RACK)
24590-HLW-M6-HOP-P0006		P&ID (HLW MELTER OFFGAS SYS MELTER/PRIMARY OFFGAS SCRUBBER)
24590-WTP-MV-M59T-00001		PRESSURE VESSEL TOLERANCES STANDARD DETAILS
24590-WTP-MV-M59T-00007		THERMOWELL CONNECTION STANDARD DETAILS
24590-WTP-MV-M59T-00009		LIFTING LUGS STANDARD DETAILS
24590-WTP-MV-M59T-00010		TAILING LUG STANDARD DETAILS
24590-WTP-MV-M59T-00011		WASH RINGS STANDARD DETAILS
24590-WTP-MV-M59T-00012		GROUNDING LUG STANDARD DETAILS
24590-WTP-MV-M59T-00016001		VESSEL CONNECTIONS STANDARD DETAILS SHT 1 of 2
24590-WTP-MV-M59T-00017		VESSEL INSPECTION MANWAY STANDARD DETAILS
24590-WTP-MV-M59T-00004		PULSE JET MIXERS STANDARD DETAILS
24590-WTP-MV-M59T-00013		CHARGE VESSEL STANDARD DETAILS
24590-WTP-MV-M59T-00014		RFD PUMPS DETAIL
24590-WTP-MV-M59T-00016002		VESSEL CONNECTIONS STANDARD DETAILS SHT 2of2

REV	DESCRIPTION	ORG	CHKD	RVWD	APVD	DATE
2	REVISED TO ADD DETAIL 1 AND GHOSTING	[signature]	[signature]	RT	[signature]	12/3/04
1	ISSUED FOR PERMITTING USE	JJ	CS	CS	MH	6/04/03
0	ISSUED FOR PERMITTING USE	JJ	CS		SK	10/03/02

REVISION HISTORY

Q

ISSUED BY RPP-WTP PDC

ISSUE STAMP

PROJECT No.	24590
SITE	HANFORD
AREA	200E
BUILDING No.	30

	BY	DATE
ORIGINATOR	JESSICA JACKSON	10/02/02
CHECKER	CLIFF SLATER	10/03/02
APPROVER	SUZANNE KIRK	10/03/02
REVIEWER		

MARK W. HOFFMANN · STATE OF WASHINGTON · 0030952 · REGISTERED PROFESSIONAL ENGINEER · 12/10/04 · EXPIRES 12/10/06

BECHTEL

RIVER PROTECTION PROJECT
WASTE TREATMENT PLANT
2435 STEVENS CENTER PLACE
RICHLAND, WA 99352

CONTRACT No: DE-AC27-01RV14136

EQUIPMENT ASSEMBLY SBS CONDENSATE RECEIVER VESSEL HOP-VSL-00903

CONTENT APPLICABLE TO ALARA? XX YES NO
ADR NO. N/A REV:
DIM REFERENCE No.

SCALE: NONE

24590-HLW-MV-HOP-P0001 REV 2

'E' SIZE - 44x34 COMPUTER GENERATED - MANUAL CHANGES NOT PERMITTED

WHEN REFERENCING DRAWING AND DIM NUMBERS IN DOCUMENTS, BE SURE TO INCLUDE DASHES BETWEEN ELEMENTS

11/18/2004 09:19:01 AM

PLOTTED BY: jrwilli3

R10446028

FORM E_SDN.DGN 02/2003

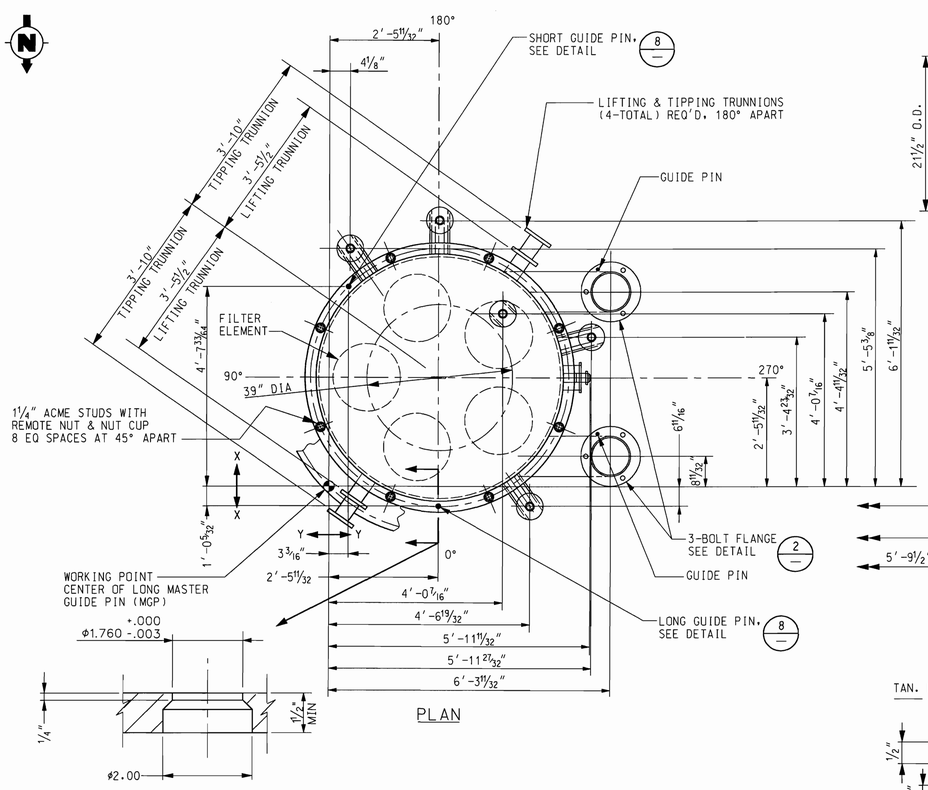

PLAN

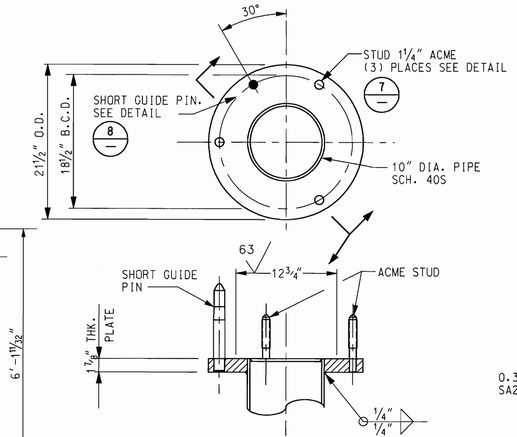

DETAIL 2
3 BOLT FLANGE

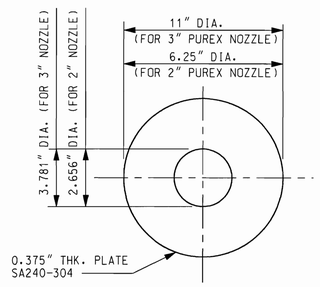

DETAIL 3
KICK PLATE

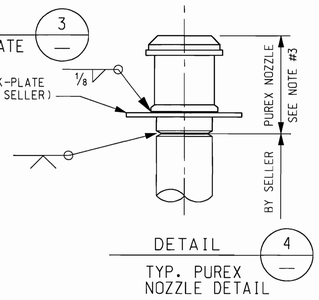

DETAIL 4
TYP. PUREX NOZZLE DETAIL

GENERAL NOTES:

1. DELETED
2. FLANGE FACE SURFACE FINISH TO BE IN ACCORDANCE WITH SEAL SUPPLIER RECOMMENDATIONS.
3. PUREX NOZZLES WILL BE PROVIDED TO VESSEL SELLER. THE INSTALLATION OF THE PUREX NOZZLES TO THE PIPE NOZZLES AND KICK PLATES IS INCLUDED IN SELLER'S SCOPE OF WORK.
4. DELETED
5. FILTER ELEMENT SHALL HAVE OVERALL DIMENSIONS NOT TO EXCEED 10'-0" LONG X 18" O.D. WITH A 12" I.D.
6. THE FILTER ELEMENT SHALL BE CAPABLE OF BEING REMOTELY DIS-ASSEMBLED INTO FIVE (5) SEGMENTS. EACH SEGMENT SHALL HAVE DIMENSIONS NOT TO EXCEED 24" LONG X 18" O.D.
7. DIP TUBES LENGTH TO BE DETERMINED DURING SELLER'S DETAILED DESIGN.
8. ELBOW SHALL BE SHORT RADIUS AND SET ON BOTTOM HEAD. THE WELD SHALL BE ULTRASONICALLY EXAMINED FULLY.
9. DRAWING 24590-WTP-MV-M59T-00001, "PRESSURE VESSEL TOLERANCES" NOTES 6 THROUGH 17, 22, 23, 24, 26, 27, 30, AND 31 DO NOT APPLY TO THIS DWG.
10. SELLER SHALL DETERMINE ANCHOR BOLT NUMBER, BOLT CIRCLE DIAMETER AND MINIMUM BOLT DIAMETER, WITH A MINIMUM OF 8-1" ASTM F1554 GRADE 36 BOLTS. BECHTEL WILL PROVIDE ANCHOR BOLTS.

HOLDS:

1. O-RING MATERIAL WILL BE SELECTED BY BECHTEL AFTER REVIEW OF GENERAL ARRANGEMENT DRAWINGS.

PLEASE NOTE THAT SOURCE, SPECIAL NUCLEAR AND BYPRODUCT MATERIALS, AS DEFINED IN THE ATOMIC ENERGY ACT OF 1954 (AEA), ARE REGULATED AT THE U.S. DEPARTMENT OF ENERGY (DOE) FACILITIES EXCLUSIVELY BY DOE ACTING PURSUANT TO ITS AEA AUTHORITY. DOE ASSERTS, THAT PURSUANT TO THE AEA, IT HAS SOLE AND EXCLUSIVE RESPONSIBILITY AND AUTHORITY TO REGULATE SOURCE, SPECIAL NUCLEAR, AND BYPRODUCT MATERIAL AT DOE-OWNED NUCLEAR FACILITIES. INFORMATION CONTAINED HEREIN ON RADIONUCLIDES IS PROVIDED FOR PROCESS DESCRIPTION PURPOSES ONLY.

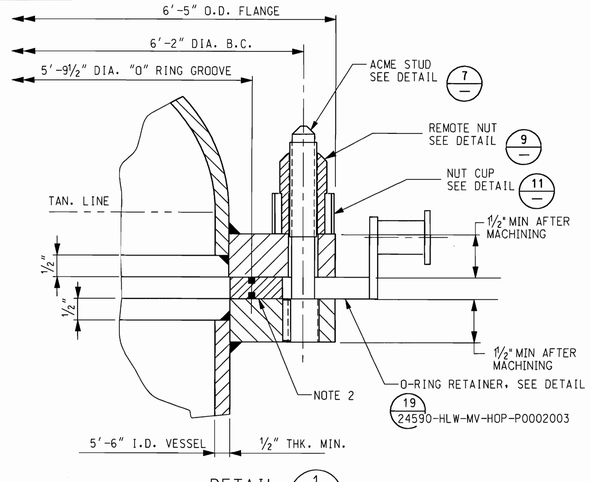

DETAIL 1

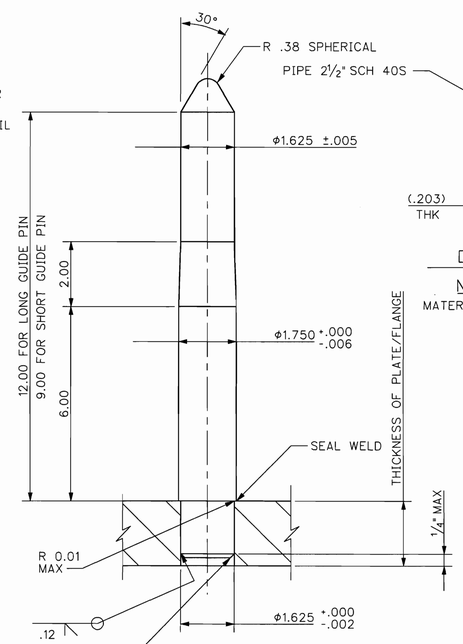

DETAIL 8
3-BOLT FLANGE/VESSEL HEAD GUIDE PIN
MATERIAL: SA-582-416

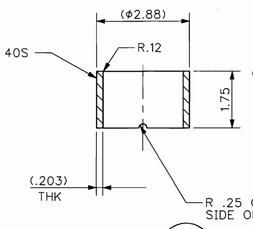

DETAIL 11
NUT CUP
MATERIAL: SA312 304

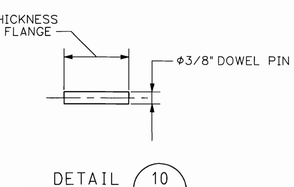

DETAIL 10
MATERIAL: SA-470-304

VESSEL COMPONENT QUALITY LEVELS	
COMPONENT	QUALITY LEVEL
MAIN VESSEL, SKIRT, ALL NOZZLES	QL-2
ALL INTERNAL SUPPORTS	QL-2
PLANT WASH SPRAY NOZZLES & PIPING	QL-2
HEME FILTER MEDIA	CM

THIS DRAWING TO BE READ IN CONJUNCTION WITH THE MECHANICAL DATA SHEET NO 24590-HLW-MVD-HOP-P0007

DRAWING INDEX		
DWG NO	REV	TITLE
24590-HLW-MV-HOP-P0002001	0	HLW PRIMARY OFFGAS HEME HOP-HEME-00001A/B (SH.1)
24590-HLW-MV-HOP-P0002002	0	HLW PRIMARY OFFGAS HEME HOP-HEME-00001A/B (SH.2)
24590-HLW-MV-HOP-P0002003	0	HLW PRIMARY OFFGAS HEME HOP-HEME-00001A/B (SH.3)

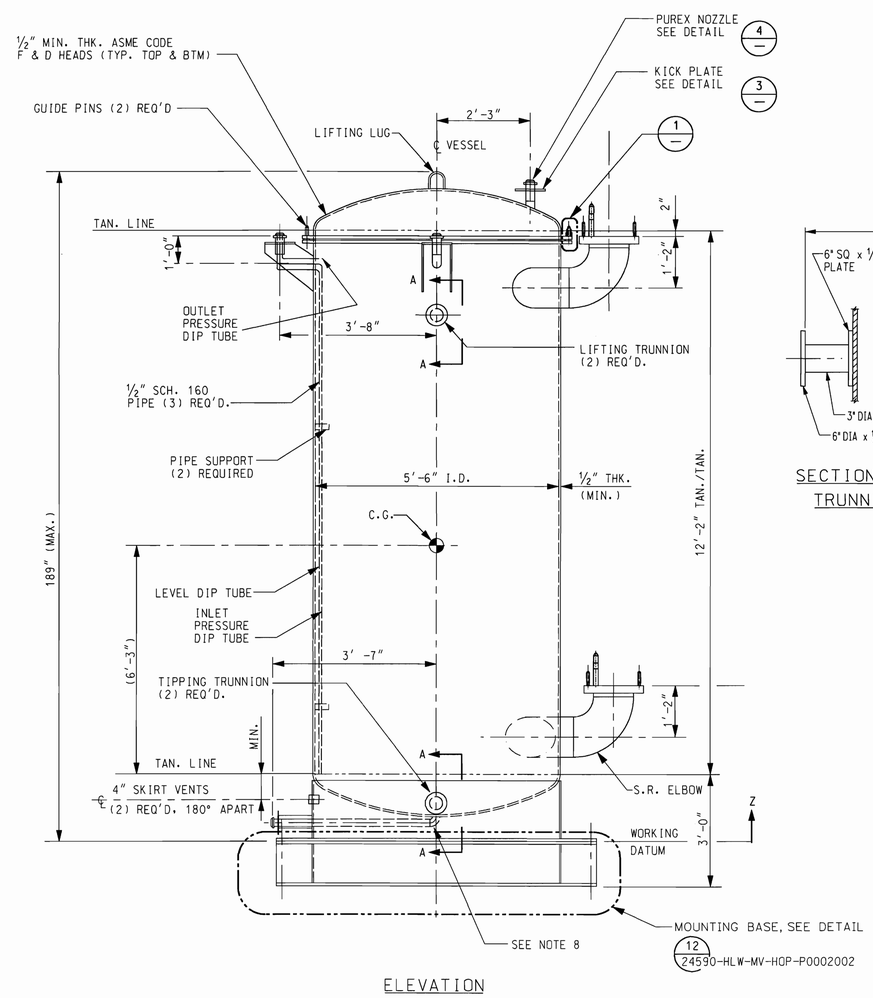

ELEVATION

SEE PLAN FOR TRUE ORIENTATION

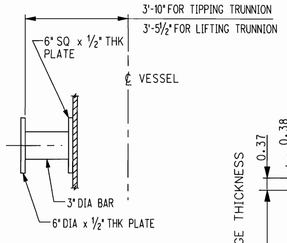

SECTION A-A
TRUNNION

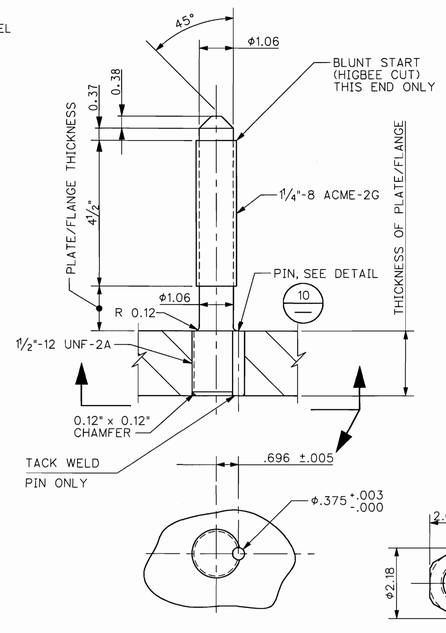

DETAIL 7
ACME STUD
MATERIAL: SA-564-630 H1150

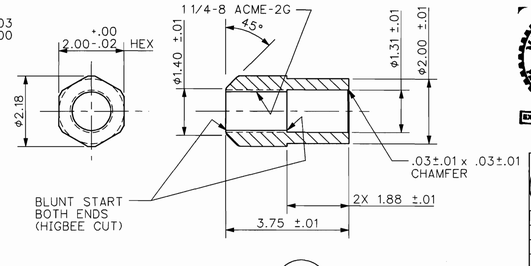

DETAIL 9
REMOTE NUT
MATERIAL: NITRONIC 60

REFERENCE DRAWINGS		
DWG NO	REV	TITLE
24590-WTP-MV-M59T-00001	2	PRESSURE VESSEL TOLERANCES STANDARD DETAILS
24590-WTP-MV-M59T-00016001	1	VESSEL CONNECTIONS STANDARD DETAILS SHT 1 OF 3
24590-WTP-MV-M59T-00018	1	VESSEL NAMEPLATE STANDARD DETAILS
24590-HLW-M6-HOP-P0002		P&ID HLW MELTER OFFGAS SYSTEM
24590-WTP-M61-P23T-00005	0	WTP DETAILS-NOZZLE PUREX MALE CONNECTORS 1", 2", 3" & 4"
24590-WTP-M61-P23T-00045	0	WTP DETAILS-CONNECTOR NOZZLES PUREX MALE CONNECTOR 2" 3 WAY

REVISION HISTORY							
REV	DESCRIPTION	ORG	CHKD	RVWD	APVD	DATE
0	ISSUED FOR PERMITTING USE					4/22/04

ISSUED BY ORP-WTP PDC INIT DATE ISSUE STAMP

PROJECT No.	24590	
SITE	HANFORD	
AREA	200E	
BUILDING No.	30	

	BY	DATE
ORIGINATOR		4/22/04
CHECKER		04/22/04
APPROVER		4/22/04
REVIEWER		4/22/04

CONTENT APPLICABLE TO ALARA? [XX] YES [ ] NO
ADR NO. N/A REV:

RIVER PROTECTION PROJECT
WASTE TREATMENT PLANT
2435 STEVENS CENTER PLACE
RICHLAND, WA 99352

CONTRACT No: DE-AC27-01RV14136

EQUIPMENT ASSEMBLY HLW PRIMARY OFFGAS HEME HOP-HEME-00001A/B (Q) SHEET 1 OF 3

SCALE: NTS

24590-HLW-MV-HOP-P0002001 REV 0

FORM E_SDN.DGN 02/2003

"E" SIZE - 44x34 COMPUTER GENERATED - MANUAL CHANGES NOT PERMITTED

04/22/2004 03:59:48 PM

PLOTTED BY: j-wi13
C:\Work\Items\P0002001\HLW\MV\HOP\P0002001-alt.DGN

R1030879

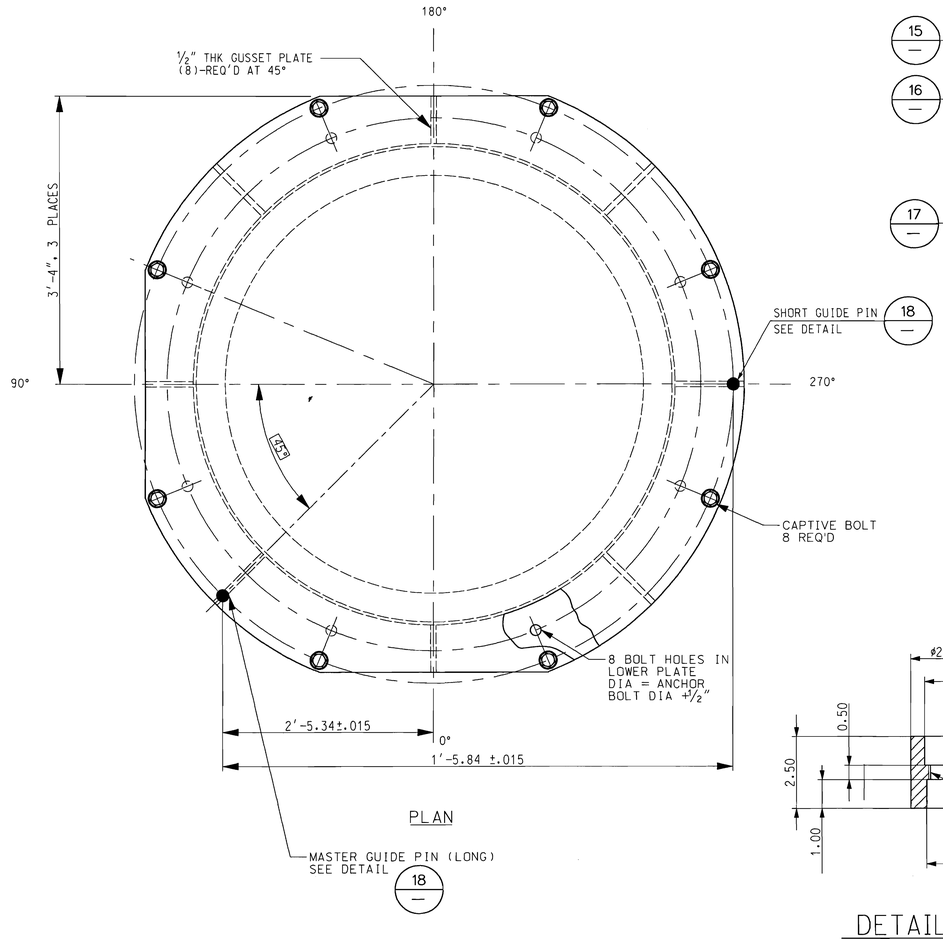

PLAN

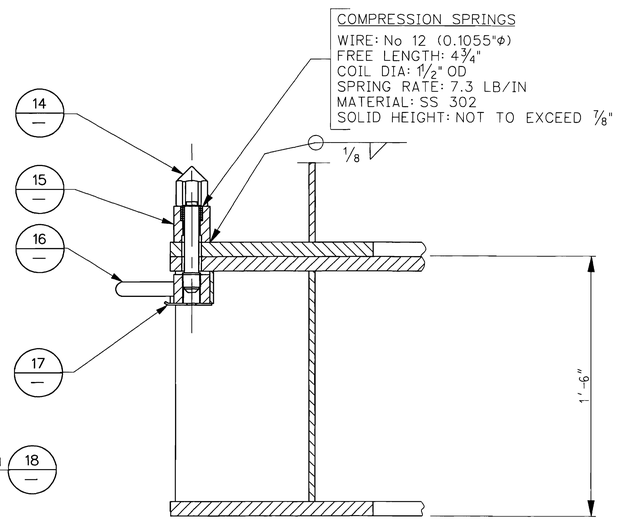

DETAIL 13

TYPICAL 8 PLACES

CAPTIVE BOLT

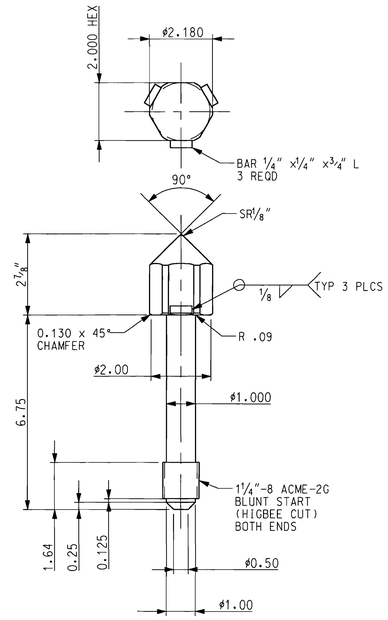

DETAIL 14

MATERIAL: SA564-630 H1150

BOLT

PLEASE NOTE THAT SOURCE, SPECIAL NUCLEAR AND BYPRODUCT MATERIALS, AS DEFINED IN THE ATOMIC ENERGY ACT OF 1954 (AEA), ARE REGULATED AT THE U.S. DEPARTMENT OF ENERGY (DOE) FACILITIES EXCLUSIVELY BY DOE ACTING PURSUANT TO ITS AEA AUTHORITY. DOE ASSERTS, THAT PURSUANT TO THE AEA, IT HAS SOLE AND EXCLUSIVE RESPONSIBILITY AND AUTHORITY TO REGULATE SOURCE, SPECIAL NUCLEAR, AND BYPRODUCT MATERIAL AT DOE-OWNED NUCLEAR FACILITIES. INFORMATION CONTAINED HEREIN ON RADIONUCLIDES IS PROVIDED FOR PROCESS DESCRIPTION PURPOSES ONLY.

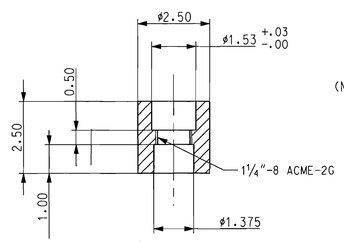

DETAIL 15

MATERIAL: 304 SST

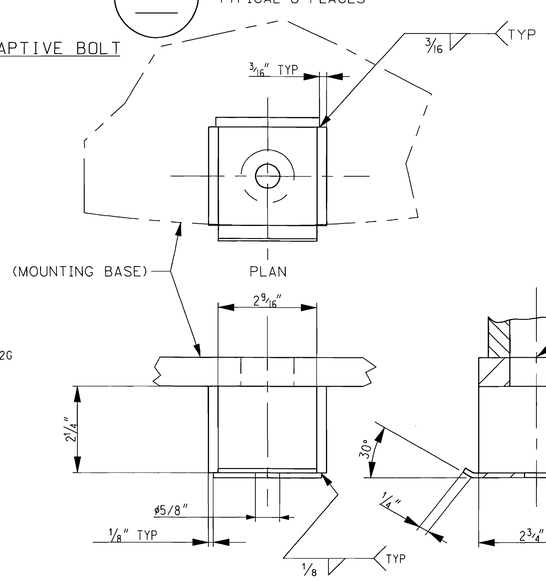

DETAIL 17

MATERIAL: SA 240 304

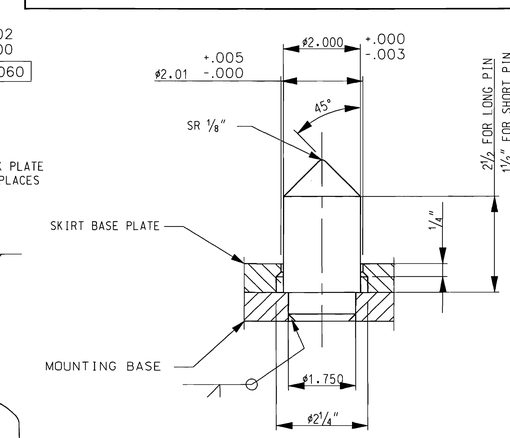

DETAIL 18

MATERIAL: SA-582-416

VESSEL BASE GUIDE PIN

SEE SHEET 1 FOR GENERAL NOTES

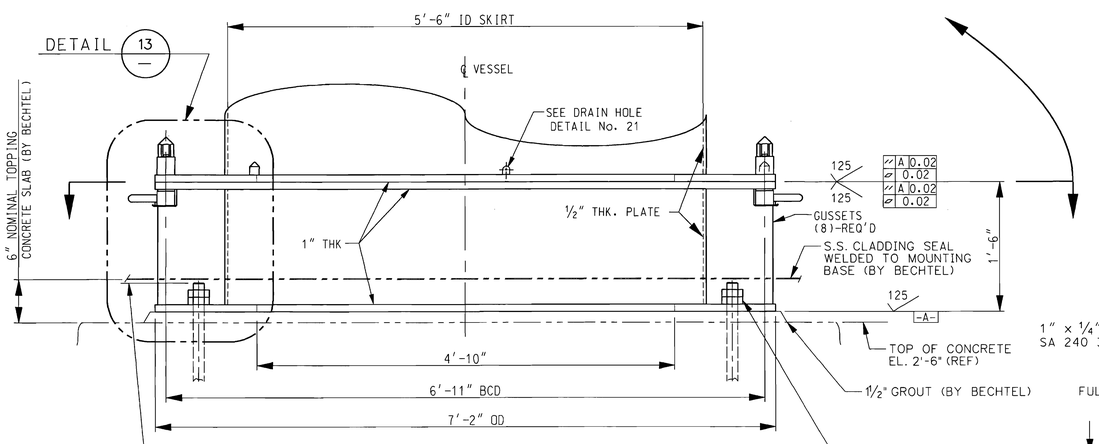

ELEVATION

SEE PLAN FOR TRUE ORIENTATION

DETAIL 12

24590-HLW-MV-HOP-P0002001

MOUNTING BASE

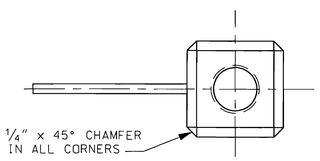

PLAN

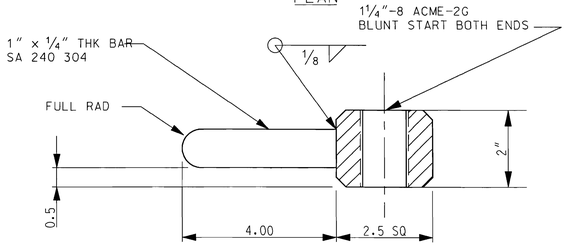

DETAIL 16

MATERIAL: NITRONIC 60

NUT

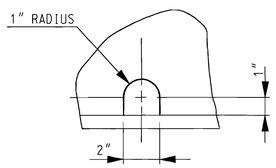

DETAIL 21

DRAIN HOLE DETAIL

(4) REQUIRED

MARK W. HOPKINS STATE OF WASHINGTON REGISTERED PROFESSIONAL ENGINEER 4/22/04 EXPIRES 12/10/04

REV	DESCRIPTION	ORG	CHKD	RVWD	APVD	DATE
0	ISSUED FOR PERMITTING USE					4/22/04

Q QUALITY LEVEL

REVISION HISTORY

ISSUED BY RPP-WTP PDC ENG DATE ISSUE STAMP

PROJECT No.	24590
SITE	HANFORD
AREA	200E
BUILDING No.	30

	BY	DATE
ORIGINATOR		3/26/04
CHECKER	RPP	04/03/04
APPROVER		4/22/04
REVIEWER		3/3/04

CONTENT APPLICABLE TO ALARA? [XX] YES [ ] NO

ADR NO. N/A REV:

BECHTEL

RIVER PROTECTION PROJECT
WASTE TREATMENT PLANT
2435 STEVENS CENTER PLACE
RICHLAND, WA 99352

CONTRACT No: DE-AC27-01RV14136

EQUIPMENT ASSEMBLY HLW PRIMARY OFFGAS HEME HOP-HEME-00001A/B SHEET 2 OF 3

SCALE: NTS

24590-HLW-MV-HOP-P0002002

REV 0

'E' SIZE - 44x34
COMPUTER GENERATED - MANUAL CHANGES NOT PERMITTED

FORM E_SDN.DGN 02/2003

02/26/2004 03:34:04 PM

PLOTTED BY: y-ni3
C:\Work\dgn\050710\HLW\MV\HOP\P0002002.DGN

R1003859590

DWG No. 24590-HLW-MV-HOP-P0002003

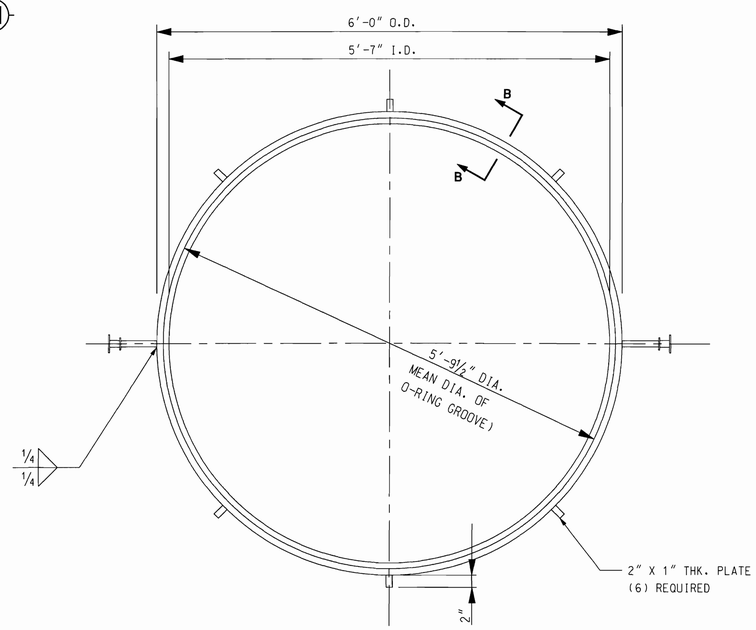

PLAN

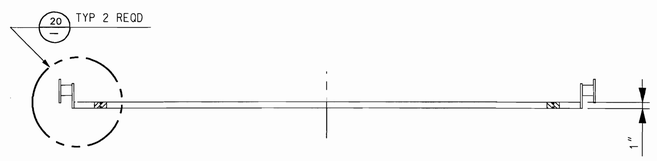

ELEVATION

DETAIL 19 24590-HLW-MV-HOP-P0002001

O-RING RETAINER

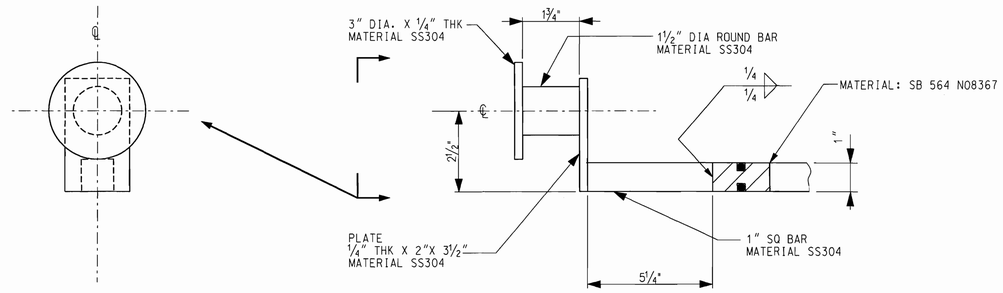

DETAIL 20

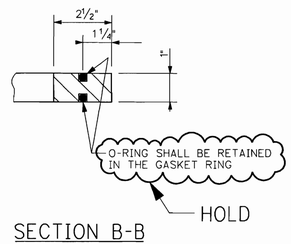

SECTION B-B

PLEASE NOTE THAT SOURCE, SPECIAL NUCLEAR AND BYPRODUCT MATERIALS, AS DEFINED IN THE ATOMIC ENERGY ACT OF 1954 (AEA), ARE REGULATED AT THE U.S. DEPARTMENT OF ENERGY (DOE) FACILITIES EXCLUSIVELY BY DOE ACTING PURSUANT TO ITS AEA AUTHORITY. DOE ASSERTS, THAT PURSUANT TO THE AEA, IT HAS SOLE AND EXCLUSIVE RESPONSIBILITY AND AUTHORITY TO REGULATE SOURCE, SPECIAL NUCLEAR, AND BYPRODUCT MATERIAL AT DOE-OWNED NUCLEAR FACILITIES. INFORMATION CONTAINED HEREIN ON RADIONUCLIDES IS PROVIDED FOR PROCESS DESCRIPTION PURPOSES ONLY.

SEE SHEET 1 FOR GENERAL NOTES

MARK W. HOFFMAN STATE OF WASHINGTON 36099 REGISTERED PROFESSIONAL ENGINEER 4/22/04
EXPIRES 12/16/04

REV	DESCRIPTION	ORG	CHKD	RVWD	APVD	DATE
0	ISSUED FOR PERMITTING USE					4/22/04

REVISION HISTORY

Q QUALITY LEVEL

ISSUED BY RPP WTP PDC 4/22/04 DATE ISSUE STAMP

PROJECT No.	24590
SITE	HANFORD
AREA	200E
BUILDING No.	30

BECHTEL

RIVER PROTECTION PROJECT
WASTE TREATMENT PLANT
2435 STEVENS CENTER PLACE
RICHLAND, WA 99352

CONTRACT No: DE-AC27-01RV14136

	BY	DATE
ORIGINATOR		2/26/04
CHECKER	RPP	02/03/04
APPROVER		4/22/04
REVIEWER		3/3/04

CONTENT APPLICABLE TO ALARA? [XX] YES [ ] NO
ADR NO. N/A REV:

EQUIPMENT ASSEMBLY
HLW PRIMARY OFFGAS HEME
HOP-HEME-00001A/B
SHEET 3 OF 3

SCALE: NONE

24590-HLW-MV-HOP-P0002003

REV 0

FORM E_SDN.DGN 02/2003

'E' SIZE - 44x34
COMPUTER GENERATED - MANUAL CHANGES NOT PERMITTED

02/26/2004 03:35:44 PM

PLOTTED BY: r-ik3
C:\WORKING\50270\HLW\MV\HOP\P0002003.DGN

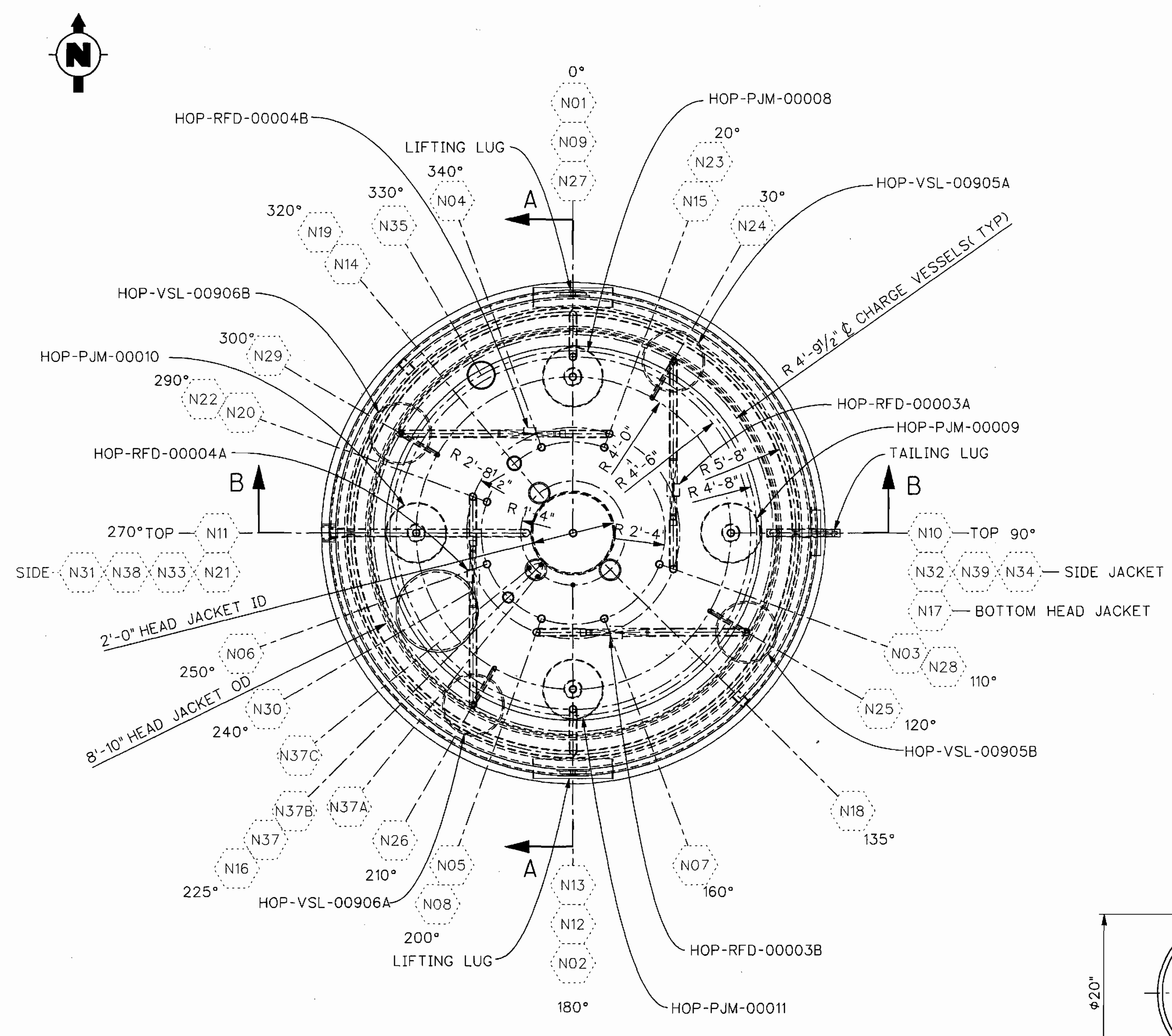

PLAN

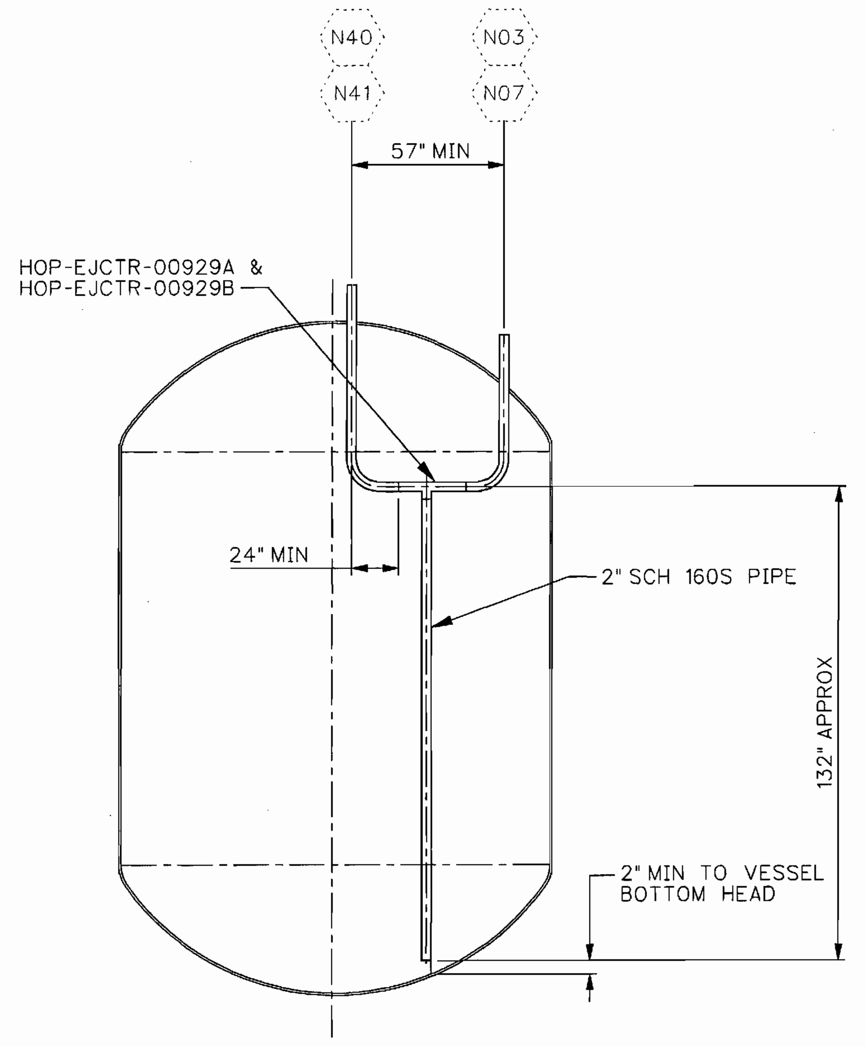

N03/N40 (HOP-EJCTR-00929A)
N07/N41 (HOP-EJCTR-00929B)

NOZZLE	SIZE	SCHED/WALL	SERVICE/REMARKS	"Z'DIM	REF DWG/DET	CONN PIPE SIZE/SCHED
N01	2"	80S	PLANT WASH	10'-7"	24590-WTP-MV-M59T-00016001 DET 3	2"-40S
N02	2"	80S	PLANT WASH	10'-7"	24590-WTP-MV-M59T-00016001 DET 3	2"-40S
N03	2"	80S	STEAM SUPPLY TO HOP-EJCTR-00929A	10'-7"	24590-WTP-MV-M59T-00016001 DET 4	2"-40S
N04	2"	80S	SPARE	11'-4"	24590-WTP-MV-M59T-00016001 DET 2	2"-40S
N05	2"	160S	SPARE (DIP LEG)	11'-4"	24590-WTP-MV-M59T-00016001 DET 4	2"-40S
N06	2"	160S	SPARE (DIP LEG)	11'-4"	24590-WTP-MV-M59T-00016001 DET 4	2"-40S
N07	2"	80S	STEAM SUPPLY TO HOP-EJCTR-00929B	10'-7"	24590-WTP-MV-M59T-00016001 DET 4	2"-40S
N08	2"	160S	SBS CONDENSATE RECYCLE TO HOP-SCB-00002	11'-4"	24590-WTP-MV-M59T-00016001 DET 2	2"-40S
N09	2"	160S	FLUIDIC MIXER SUPPLY AIR TO HOP-PJM-00008	10'-10"	24590-WTP-MV-M59T-00016001 DET 3	2"-40S
N10	2"	160S	FLUIDIC MIXER SUPPLY AIR TO HOP-PJM-00009	10'-10"	24590-WTP-MV-M59T-00016001 DET 3	2"-40S
N11	2"	160S	FLUIDIC MIXER SUPPLY AIR TO HOP-PJM-00010	10'-10"	24590-WTP-MV-M59T-00016001 DET 3	2"-40S
N12	2"	160S	FLUIDIC MIXER SUPPLY AIR TO HOP-PJM-00011	10'-10"	24590-WTP-MV-M59T-00016001 DET 3	2"-40S
N13	1"	160S	TEMPERATURE	11'-4"	24590-WTP-MV-M59T-00007 ASSY 2	1"-10S
N14	6"	3/8" PLATE	RADAR WAVE GUIDE CONE NOZZLE	11'-2"	24590-WTP-MV-M59T-00016002 DET 19	N/A
N15	2"	160S	HEME DRAIN FROM HOP-HEME-00002A (DIP LEG)	11'-4"	24590-WTP-MV-M59T-00016001 DET 4	2"-40S
N16	6"	3/8" PLATE	WESP DRAIN FROM HOP-WESP-00002 (DIP LEG)	11'-4"	24590-WTP-MV-M59T-00016001 DET 4	6"-10S
N17	3"	160S	COOLING WATER RETURN, BOTTOM HEAD JACKET	(-) 2'-9 15/16"	24590-WPT-MV-M59T-00016001 DET 1	3"-40S
N18	6"	3/8" PLATE	RADAR WAVE GUIDE CONE NOZZLE	11'-2"	24590-WTP-MV-M59T-00016002 DET 19	N/A
N19	6"	3/8" PLATE	SBS CONDENSATE INLET FROM HOP-SCB-00002 (DIP LEG)	11'-4"	24590-WTP-MV-M59T-00016001 DET 2	6"-10S
N20	2"	80S	SPARE	11'-4"	24590-WTP-MV-M59T-00016001 DET 2	2"-40S
N21	3"	160S	COOLING WATER SUPPLY, BOTTOM HEAD JACKET	(-) 3'-9"	24590-WTP-MV-M59T-00016001 DET 1	3"-40S
N22	2"	160S	RFD DISCHARGE SBS RECYCLE TO HOP-SCB-00002	11'-4"	24590-WTP-MV-M59T-00016001 DET 3	2"-40S
N23	2"	160S	RFD DISCHARGE SBS RECYCLE TO HOP-SCB-00002	11'-4"	24590-WTP-MV-M59T-00016001 DET 3	2"-40S
N24	1 1/2"	160S	RFD SUPPLY AIR TO HOP-VSL-00905A	11'-10"	24590-WTP-MV-M59T-00016001 DET 3	1"-40S
N25	1 1/2"	160S	RFD SUPPLY AIR TO HOP-VSL-00905B	11'-10"	24590-WTP-MV-M59T-00016001 DET 3	1"-40S
N26	1 1/2"	160S	RFD SUPPLY AIR TO HOP-VSL-00906A	11'-10"	24590-WTP-MV-M59T-00016001 DET 3	1"-40S
N27	2"	80S	VENT TO HOP-SCB-00001	11'-4"	24590-WTP-MV-M59T-00016001 DET 1	2"-40S
N28	2"	160S	RFD DISCHARGE SBS RECYCLE TO HOP-SCB-00002	11'-4"	24590-WTP-MV-M59T-00016001 DET 3	2"-40S
N29	1 1/2"	160S	RFD SUPPLY AIR TO HOP-VSL-00906B	11'-10"	24590-WTP-MV-M59T-00016001 DET 3	1"-40S
N30	24"	1/2" PLATE	MANWAY	10'-10"	24590-WTP-MV-M59T-00017 DET 2	N/A
N31	3"	80S	COOLING WATER SUPPLY, UPPER SHELL	5'-1 7/8"	24590-WTP-MV-M59T-00016001 DET 1	3"-40S
N32	3"	80S	COOLING WATER RETURN, UPPER SHELL	6'-3 ⅛"	24590-WTP-MV-M59T-00016001 DET 1	3"-40S
N33	3"	80S	COOLING WATER SUPPLY, LOWER SHELL	9 3/8"	24590-WTP-MV-M59T-00016001 DET 1	3"-40S
N34	3"	80S	COOLING WATER RETURN, LOWER SHELL	1'-10 5/8"	24590-WTP-MV-M59T-00016001 DET 1	3"-40S
N35	6"	3/8" PLATE	RADAR WAVE GUIDE CONE NOZZLE	11'-2"	24590-WTP-MV-M59T-00016002 DET 19	N/A
N37	6"	3/8" PLATE	INSTRUMENT	11'-2"	24590-WTP-MV-M59T-00016002 DET 19	N/A
N37A	1"	160S	BALANCE	11'-8"	24590-WTP-MV-M59T-00016002 DET 19	1"-40S
N37B	1"	160S	DENSITY (DIP LEG)	11'-8"	24590-WTP-MV-M59T-00016002 DET 19	1"-40S
N37C	1"	160S	LEVEL (DIP LEG)	11'-8"	24590-WTP-MV-M59T-00016002 DET 19	1"-40S
N38	3"	80S	COOLING WATER SUPPLY, CENTER SHELL	2'-11 5/8"	24590-WTP-MV-M59T-00016001 DET 1	3"-40S
N39	3"	80S	COOLING WATER RETURN, CENTER SHELL	4'-0⅞"	24590-WTP-MV-M59T-00016001 DET 1	3"-40S
N40	2"	80S	CONDENSATE DISCHARGE FROM HOP-EJCTR-00929A	11'-4"	24590-WTP-MV-M59T-00016001 DET 4	2"-40S
N41	2"	80S	CONDENSATE DISCHARGE FROM HOP-EJCTR-00929B	11'-4"	24590-WTP-MV-M59T-00016001 DET 4	2"-40S
N42	1"	160S	TEMPERATURE (SPARE)	11'-4"	24590-WTP-MV-M59T-00007 ASSY 2	1"-10S
N43	2"	160S	DRAIN FROM HOP-HEME-00002B (DIP LEG)	11'-4"	24590-WTP-MV-M59T-00016001 DET 4	2"-40S

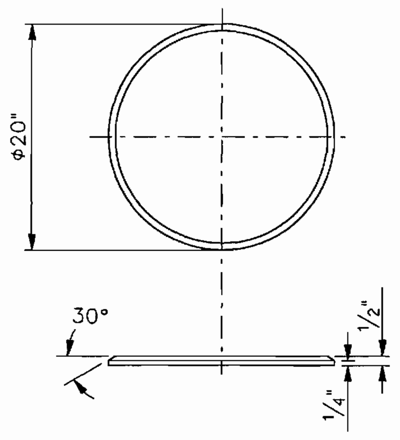

EROSION WEAR PLATE
(SB-575 N06022)

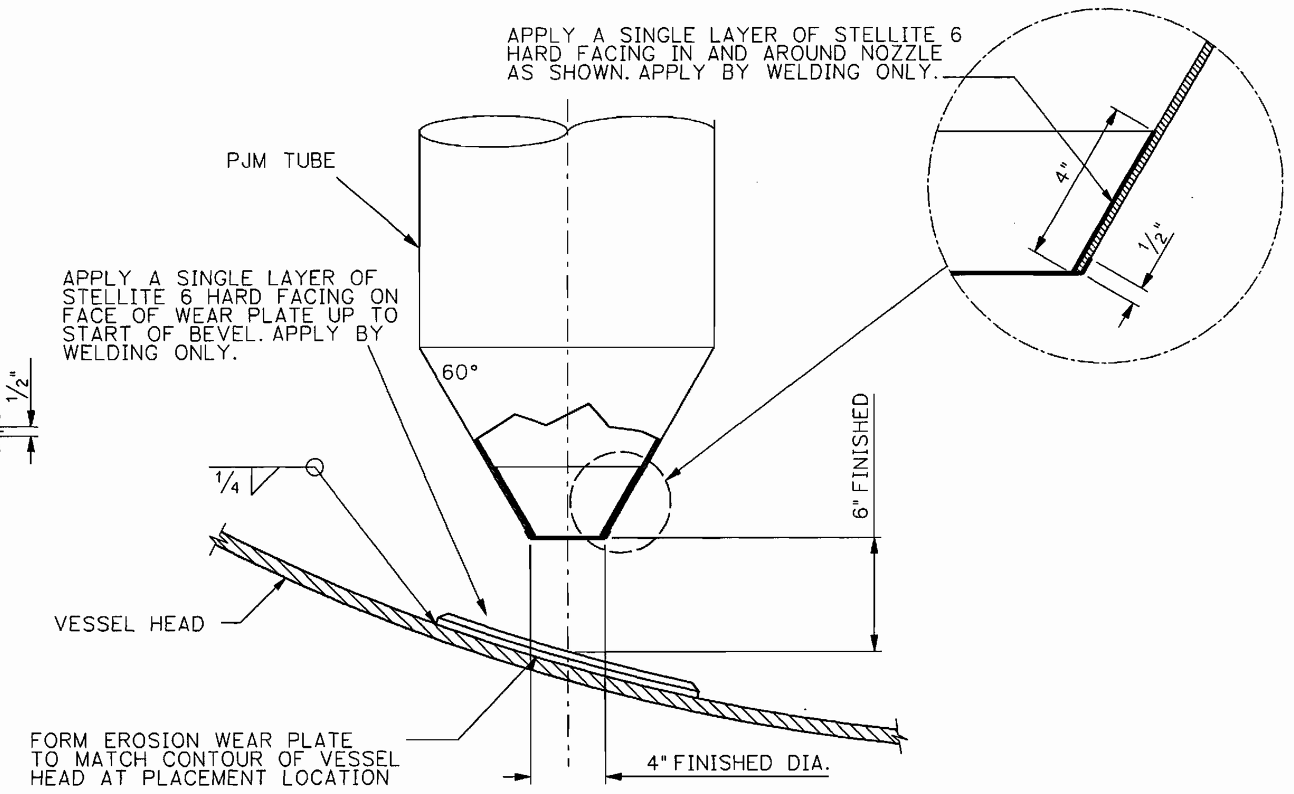

PULSE JET MIXERS
DETAIL 1

GENERAL NOTES:

1. ALL ANCHOR BOLT HOLES SHALL STRADDLE VESSEL NATURAL CENTER LINE.
2. RFD PUMP UNITS WILL BE SUPPLIED BY OTHERS FOR SELLER TO FIT IN TO THE DELIVERY PIPE WORK BETWEEN THE CHARGE VESSEL AND THE PARENT VESSEL TOP HEAD. ALL OTHER INTERNALS INCLUDING: PULSE JET MIXERS, CHARGE VESSELS, PIPE WORK AND SUPPORTING STRUCTURE TO BE SUPPLIED AND FITTED BY THE SELLER.
3. FOR DISTANCE OF DIP LEGS TO BOTTOM HEAD USE 2" CLEARANCE, UNLESS OTHERWISE SPECIFIED.
4. SELLER TO STAY THE JACKETED PORTION OF THE BOTTOM HEAD PER ASME VIII DIV 1 FIG UW-19-2 USING 1" φ STAYS ON 1⅛" SQ PITCH CENTERS.
5. "Z" DIMENSION FOR SHELL NOZZLES MEASURED FROM CENTER LINE OF NOZZLE FACE.
6. SELLER SHALL PROVIDE 8 SHIM PACKS COMPRISING OF THE FOLLOWING 10" SQUARE STAINLESS STEEL PLATES:

   2 PCS-1/4" THICK PLATES
   1 PCS-1/8" THICK PLATES
   2 PCS-1/16" THICK PLATES

7. FOR BASE SUPPORT AND ANCHORAGE REQUIREMENTS, SEE REFERENCE DRAWING 24590-HLW-DD-S13T-00002008.
8. EJECTORS WILL BE SUPPLIED BY OTHERS AND FITTED BY THE SELLER.
9. REFER TO 24590-HLW-M6-HOP-P20004 AND 24590-HLW-M6-HOP-P20006 FOR INFORMATION ON THE NOZZLE CONFIGURATION SHOWN IN PHANTOM.

2

PLEASE NOTE THAT SOURCE, SPECIAL NUCLEAR AND BYPRODUCT MATERIALS, AS DEFINED IN THE ATOMIC ENERGY ACT OF 1954 (AEA), ARE REGULATED AT THE U.S. DEPARTMENT OF ENERGY (DOE) FACILITIES EXCLUSIVELY BY DOE ACTING PURSUANT TO ITS AEA AUTHORITY. DOE ASSERTS, THAT PURSUANT TO THE AEA, IT HAS SOLE AND EXCLUSIVE RESPONSIBILITY AND AUTHORITY TO REGULATE SOURCE, SPECIAL NUCLEAR, AND BYPRODUCT MATERIAL AT DOE-OWNED NUCLEAR FACILITIES. INFORMATION CONTAINED HEREIN ON RADIONUCLIDES IS PROVIDED FOR PROCESS DESCRIPTION PURPOSES ONLY.

QUALITY LEVEL DESIGNATION FOR ALL COMPONENTS OF THIS VESSEL WILL BE QL-1

THIS DRAWING TO BE READ IN CONJUNCTION WITH THE MECHANICAL DATA SHEET 24590-HLW-MVD-HOP-P0012.

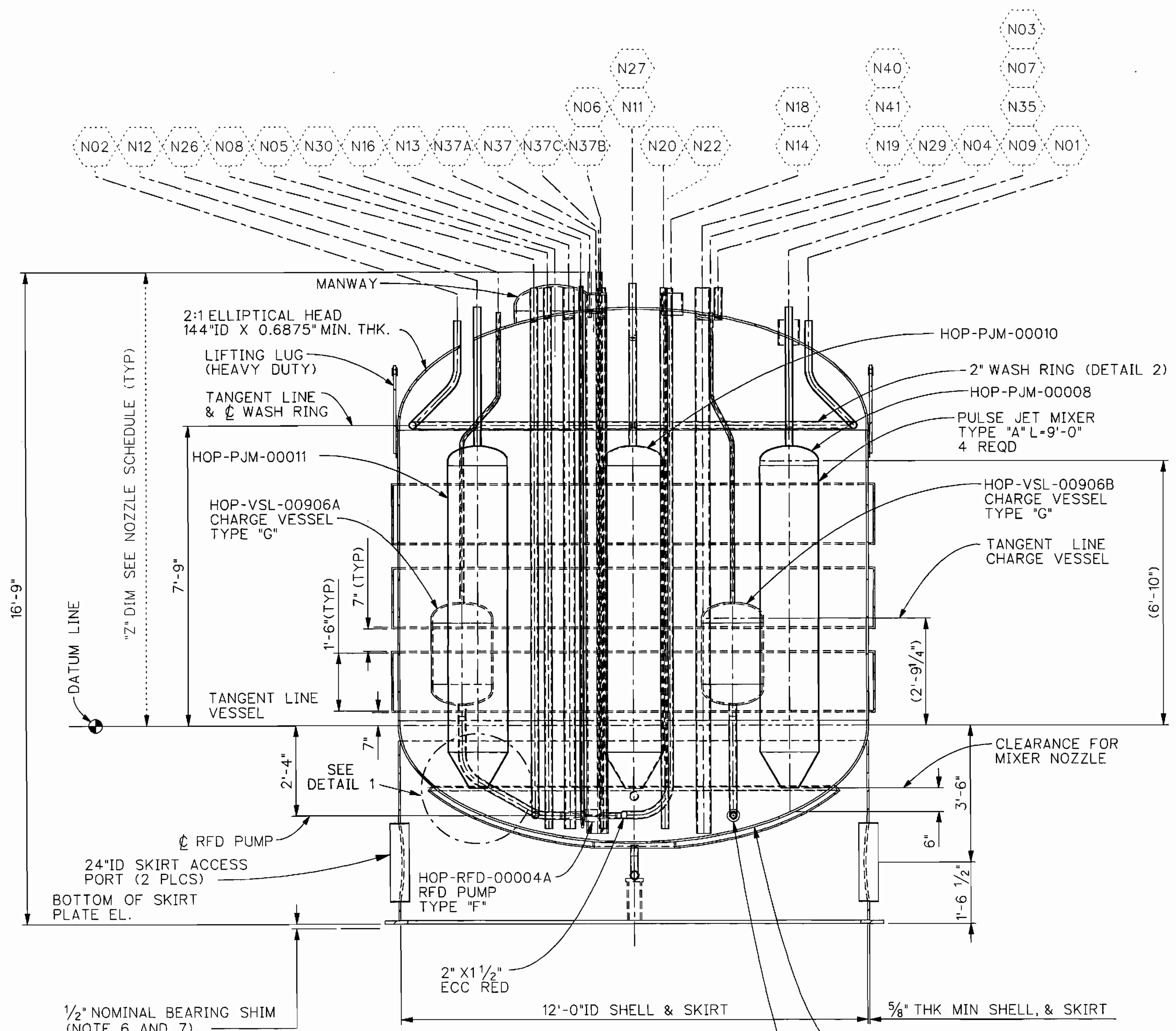

SECTION A-A

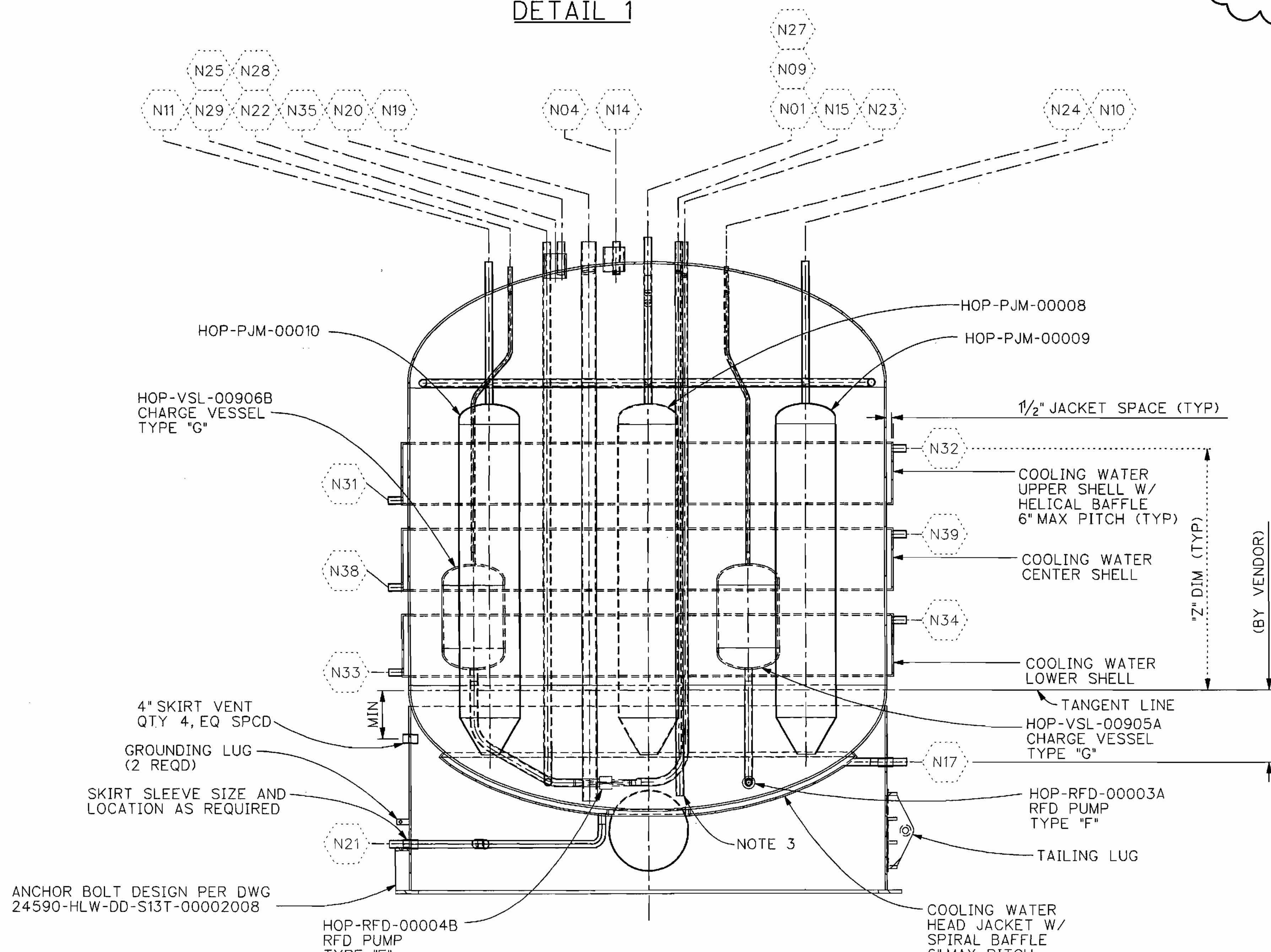

SECTION B-B

MARK W. HOFFMANN STATE OF WASHINGTON 0030952 REGISTERED PROFESSIONAL ENGINEER
EXPIRES 12/10/06
12/23/04

REFERENCE DRAWINGS		
DWG NO	REV	TITLE
24590-HLW-M6-HOP-P20004		P & ID
24590-HLW-M6-HOP-P20006		P & ID
24590-WTP-MV-M59T-00001		PRESSURE VESSEL TOLERANCES STANDARD DETAILS
24590-WTP-MV-M59T-00007		THERMOWELL CONNECTION STANDARD DETAILS
24590-WTP-MV-M59T-00009		LIFTING LUGS STANDARD DETAILS
24590-WTP-MV-M59T-00010		TAILING LUG STANDARD DETAILS
24590-WTP-MV-M59T-00011		WASH RINGS STANDARD DETAILS
24590-WTP-MV-M59T-00012		GROUNDING LUG STANDARD DETAILS
24590-WTP-MV-M59T-00016001		VESSEL CONNECTIONS STANDARD DETAILS SHT 1 of 2
24590-WTP-MV-M59T-00017		VESSEL INSPECTION MANWAY STANDARD DETAILS
24590-WTP-MV-M59T-00004		PULSE JET MIXERS STANDARD DETAILS
24590-WTP-MV-M59T-00013		CHARGE VESSEL STANDARD DETAILS
24590-WTP-MV-M59T-00014		RFD PUMPS DETAIL
24590-WTP-MV-M59T-00016002		VESSEL CONNECTIONS STANDARD DETAILS SHT 2of2
24590-HLW-DD-S13T-00002008		HLW VITRIFICATION BLDG CONCRETE EQUIPMENT SUPPORT DETAILS EL. (-) 21'-0"

REV	DESCRIPTION	ORG	CHKD	RVWD	APVD	DATE
2	ISSUED FOR PERMITTING USE	[signature]	[signature]	[signature]	[signature]	12/23/04
1	ISSUED FOR PERMITTING USE	GT	SLL	CS	MH	12/03/04
0	ISSUED FOR PERMITTING USE	JJ	SLL	CS	MH	10/6/03

REVISION HISTORY

Q

ISSUED BY RPP-WTP PDC
ISSUE STAMP

PROJECT No.	24590
SITE	HANFORD
AREA	200E
BUILDING No.	30

RIVER PROTECTION PROJECT
WASTE TREATMENT PLANT
2435 STEVENS CENTER PLACE
RICHLAND, WA 99352

CONTRACT No: DE-AC27-01RV14136

	BY	DATE
ORIGINATOR	J. JACKSON	10/6/03
CHECKER	S. LI LEE	10/6/03
APPROVER	M. HOFFMANN	10/6/03
REVIEWER	C. SLATER	10/6/03

CONTENT APPLICABLE TO ALARA? [XX] YES [ ] NO
ADR NO. N/A REV:

EQUIPMENT ASSEMBLY MELTER 2 SBS CONDENSATE RECEIVER VESSEL HOP-VSL-00904

SCALE: NONE

24590-HLW-MV-HOP-P0003 REV 2

NOZZLE	SIZE	SCHED/WALL	SERVICE/REMARKS	"Z" DIM	REF DWG/DET	CONN PIPE SIZE/SCHED
N01	2"	160S	INLET - HOP-HEME-00001A	5'-1½"	24590-WTP-MV-M59T0-00016001 DETAIL 4	2" SCH. 40S
N02	2"	160S	INLET - HOP-HEME-00001B	5'-1½"	24590-WTP-MV-M59T-00016001 DETAIL 4	2" SCH. 40S
N03	2"	160S	INLET - HEME (FUTURE)	5'-1½"	24590-WTP-MV-M59T-00016001 DETAIL 4	2" SCH. 40S
N04	2"	160S	INLET - HEME (FUTURE)	5'-1½"	24590-WTP-MV-M59T-00016001 DETAIL 4	2" SCH. 40S
N06	1½"	160S	OUTLET TO RLD-EJCTR-00020A	5'-1½"	24590-WTP-MV-M59T-00016001 DETAIL 4	1½" SCH. 40S
N07	2"	80S	VENT	5'-1½"	24590-WTP-MV M59T-00016001 DETAIL 1	CAPPED
N08	1½"	80S	INLET TO WASH RING	5'-1½"	24590-WTP-MV-M59T-00016001 DETAIL 3	1½" SCH. 40S
N09	2"O.D.	160S	THERMOWELL	5'-1½"	24590-WTP-MV-M59T-00007 DETAIL 5	1" SCH. 10S
N10	2"O.D.	160S	THERMOWELL	5'-1½"	24590-WTP-MV-M59T-00007 DETAIL 5	1" SCH. 10S
N11	2"O.D.	SEE DETAIL	INSTRUMENT (PRESSURE)	5'-1½"	24590-WTP-MV-M59T-00016001 DETAIL 5	½" SCH. 40S
N12	6"	40S	INSPECTION/CLEANOUT PORT	5'-1½"	24590-WTP-MV-M59T-00017 DETAIL 1	CAPPED
N14	1½"	40S	INSTRUMENT (RADAR)	5'-1½"	SEE DETAIL 1. THIS DWG.	1½" SCH. 40S
N16	1½"	160S	OUTLET TO RLD-EJCTR-00020B	5'-1½"	24590-WTP-MV-M59T-00016001 DETAIL 4	1½" SCH. 40S
N17	4"	40S	OVERFLOW	3'-6"	24590-WTP-MV-M59T-00016001 DETAIL 1	4" SCH. 40S
N18	2"	160S	SPARE DIP PIPE	5'-1½"	24590-WTP-MV-M59T-00016001 DETAIL 4	CAPPED
N19	2"	80S	SPARE	5'-1½"	24590-WTP-MV-M59T-00016001 DETAIL 2	CAPPED
N20	6"	40S	INSTRUMENT (RADAR)	5'-9⅞"	24590-WTP-MV-M59T-00016003 DETAIL 24	N/A
N21	3"	80S	PJV DRAIN LINE	3'-6"	24590-WTP-MV-M59T-00016001 DETAIL 1	3" SCH. 80S

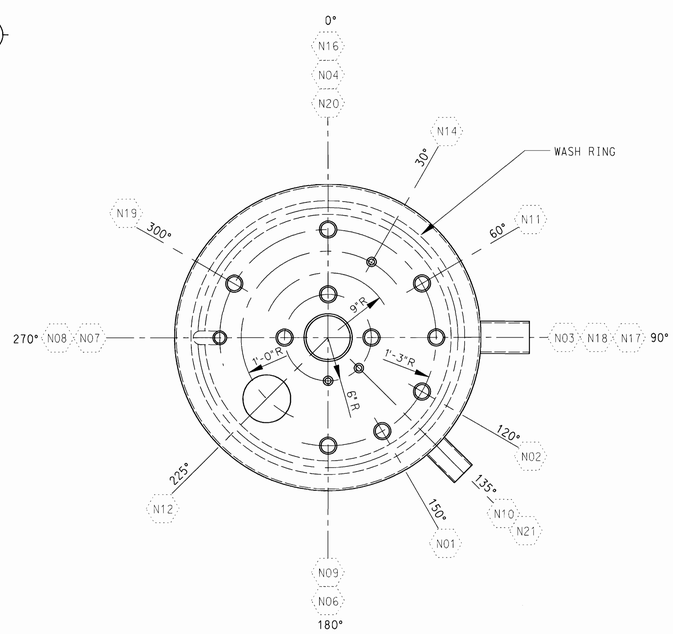

PLAN

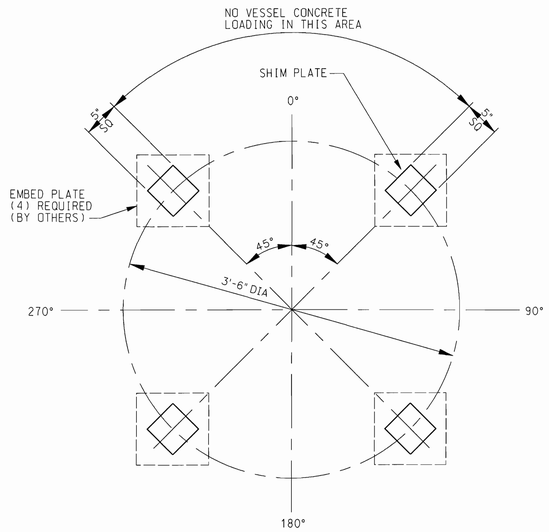

EMBED PLATE PLAN VIEW

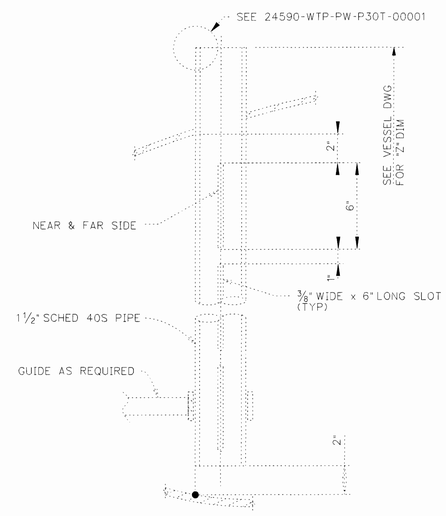

NOZZLE N14
NO SCALE

DETAIL 1

GENERAL NOTES:

1. FOR DIP LEG USE 2" CLEARANCE FROM BOTTOM UNLESS OTHERWISE NOTED.
2. "Z" DIMENSION MEASURE FROM BOTTOM TANGENT LINE TO THE STUB END / CENTER LINE OF NOZZLE.
3. SELLER SHALL SIZE ANCHOR BOLTS AND CHAIRS PER REFERENCE DRAWING No. 24590-WTP-MV-M59T-00026. BUYER SHALL PROVIDE AND WELD ANCHOR BOLTS TO A240 304L PLATES EMBEDDED IN CONCRETE FLOOR. SELLER SHALL SIZE ANCHOR BOLTS USING MATERIAL PROPERTIES OF THE EMBEDDED PLATE.
4. LIFTING LUGS DESIGN BY VENDOR.
5. SELLER SHALL PROVIDE (4) SHIM PACK 5" SQUARE IN 304 SS. EACH COMPRISING OF:

   (2) ¼" THICK PLATES
   (1) ⅛" THICK PLATE
   (2) 1/16" THICK PLATES

   THE SKIRT SHALL BE DESIGNED TO BE SUPPORTED BY THE SHIM PLATES SPACED AS SHOWN BY THE EMBED PLATE PLAN VIEW.
6. VESSEL SHALL BE 100% RADIOGRAPHED.

HOLDS:

1. DELETED
2. LIFTING LUG LOCATIONS PENDING REVIEW BY CONSTRUCTION.

VESSEL COMPONENT QUALITY LEVELS	
COMPONENTS	QUALITY LEVEL
MAIN VESSEL, SKIRT, ALL NOZZLES	CM
ALL INTERNAL SUPPORTS	CM
LEVEL INSTRUMENT (ITS) / THERMOWELL	CM
WASH RING AND PIPING	CM

THIS DRAWING TO BE READ IN CONJUNCTION WITH THE MECHANICAL DATA SHEET NO 24590-HLW-MVD-RLD-P0008

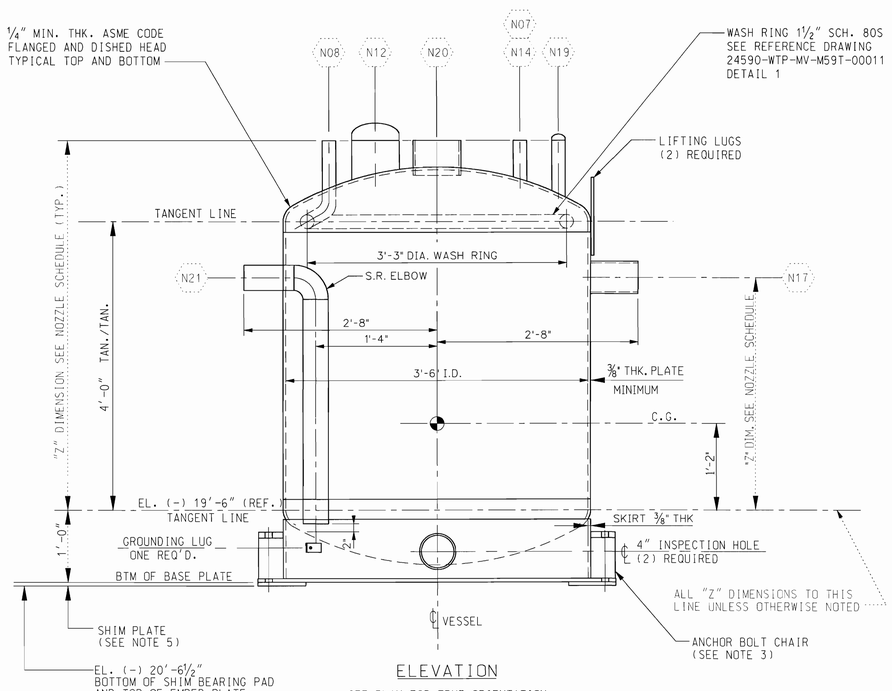

ELEVATION

SEE PLAN FOR TRUE ORIENTATION

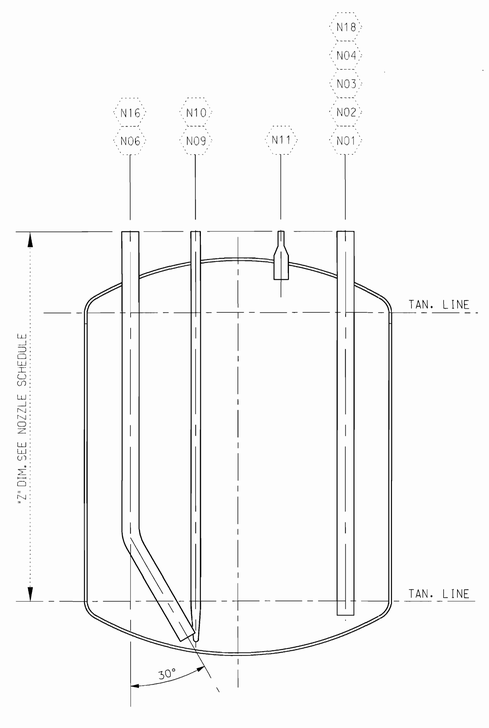

PARTIAL ELEVATION

SEE PLAN FOR TRUE ORIENTATION

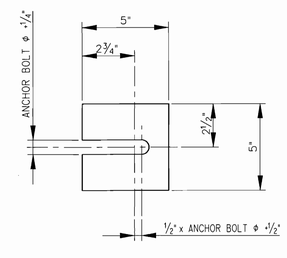

SHIM PLATE DETAIL

(SEE NOTE 5)

REFERENCE DRAWINGS		
DWG NO	REV	TITLE
24590-HLW-M6-RLD-P0014		P&ID-HLW RADIOACTIVE LIQUID WASTE DISPOSAL SYSTEM
24590-WTP-MV-M59T-00001		PRESSURE VESSEL TOLERANCES STANDARD DETAILS
24590-WTP-MV-M59T-00012		GROUNDING LUG STANDARD DETAILS
24590-WTP-MV-M59T-00016001		VESSEL CONNECTIONS STANDARD DETAILS SHEET 1 OF 3
24590-WTP-MV-M59T-00016002		VESSEL CONNECTIONS STANDARD DETAILS SHEET 2 OF 3
24590-WTP-MV-M59T-00011		WASH RINGS STANDARD DETAILS
24590-WTP-MV-M59T-00007		THERMOWELL CONNECTIONS STANDARD DETAILS
24590-WTP-MV-M59T-00026		ANCHOR BOLT CHAIR DETAILS FOR VERTICAL VESSEL
24590-WTP-MV-M59T-00018		VESSEL NAME PLATE STANDARD DETAILS
24590-WTP-PW-P30T-00001		WELD END PREP DETAIL FOR BUTT WELD ENDS

PLEASE NOTE THAT SOURCE, SPECIAL NUCLEAR AND BYPRODUCT MATERIALS, AS DEFINED IN THE ATOMIC ENERGY ACT OF 1954 (AEA), ARE REGULATED AT THE U.S. DEPARTMENT OF ENERGY (DOE) FACILITIES EXCLUSIVELY BY DOE ACTING PURSUANT TO ITS AEA AUTHORITY. DOE ASSERTS, THAT PURSUANT TO THE AEA, IT HAS SOLE AND EXCLUSIVE RESPONSIBILITY AND AUTHORITY TO REGULATE SOURCE, SPECIAL NUCLEAR, AND BYPRODUCT MATERIAL AT DOE-OWNED NUCLEAR FACILITIES. INFORMATION CONTAINED HEREIN ON RADIONUCLIDES IS PROVIDED FOR PROCESS DESCRIPTION PURPOSES ONLY.

MARK W. HOEFMANN, STATE OF WASHINGTON, 40359922, REGISTERED PROFESSIONAL ENGINEER
EXPIRED 12/10/04

CM	REV	DESCRIPTION	ORG	CHKD	RVWD	APVD	DATE
	0	ISSUED FOR PERMITTING USE					8/3/04

REVISION HISTORY

ISSUED BY RPP-WTP ENG ISSUE STAMP

PROJECT No.	24590	
SITE	HANFORD	
AREA	200E	
BUILDING No.	30	
	BY	DATE
ORIGINATOR		8/3/04
CHECKER		8/3/04
APPROVER		8/3/04
REVIEWER		8/3/04

CONTENT APPLICABLE TO ALARA? [XX] YES [ ] NO
ADR NO. N/A REV:

BECHTEL

RIVER PROTECTION PROJECT
WASTE TREATMENT PLANT
2435 STEVENS CENTER PLACE
RICHLAND, WA 99352

CONTRACT No: DE-AC27-01RV14136

EQUIPMENT ASSEMBLY HLW OFFGAS DRAINS COLLECTION VESSEL RLD-VSL-00002

SCALE: NTS

24590-HLW-MV-RLD-P0002

REV 0

'E' SIZE - 44x34
COMPUTER GENERATED - MANUAL CHANGES NOT PERMITTED

08/03/2004 09:44:00 AM

PLOTTED BY: jwa3
C:\Work\Proj\0270-HLW\MV\RLD\P0002.dgn

R1034185

FORM E_SDN.DGN 02/2003

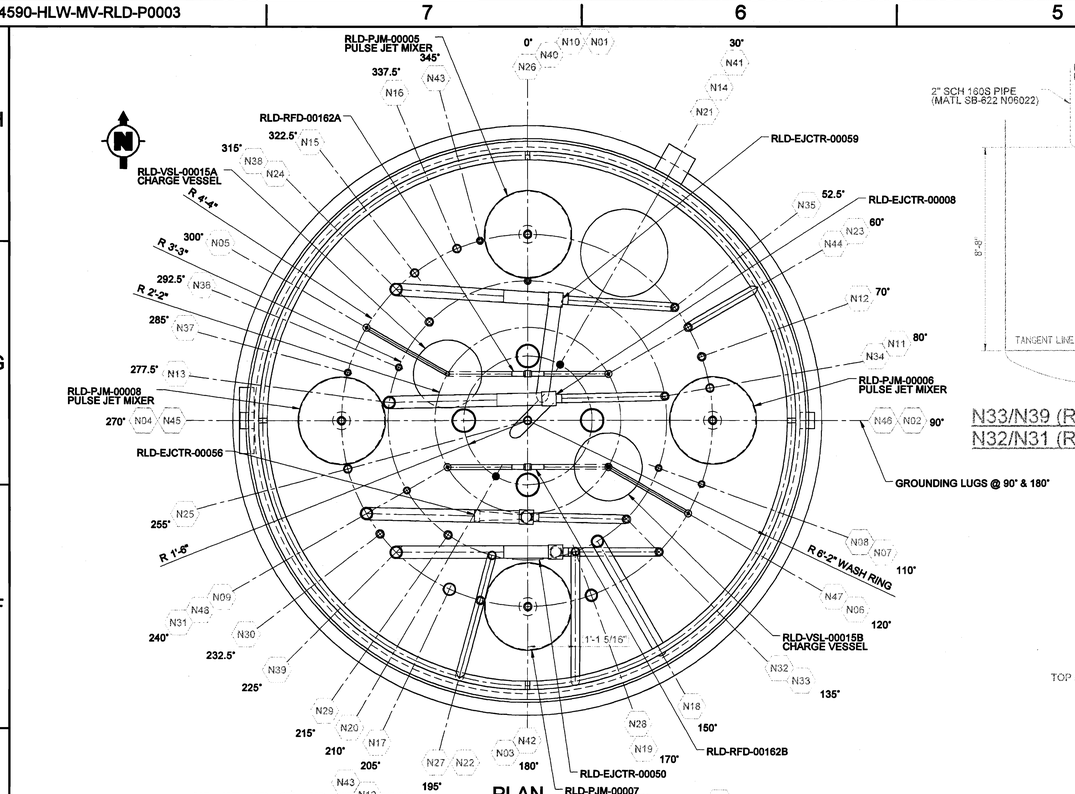

PLAN

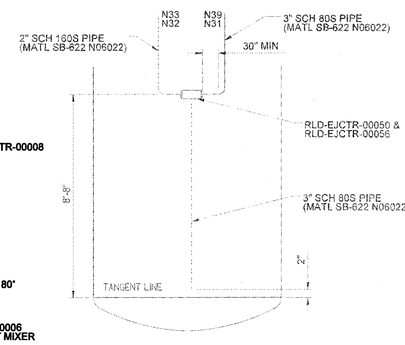

N33/N39 (RLD-EJCTR-00050)
N32/N31 (RLD-EJCTR-00056)

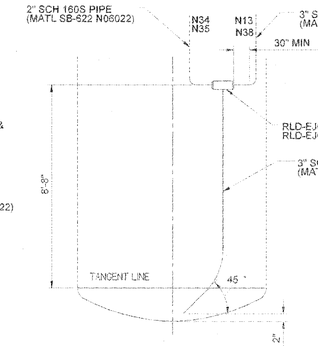

N34/N13 (RLD-EJCTR-00008)
N35/N38 (RLD-EJCTR-00059)

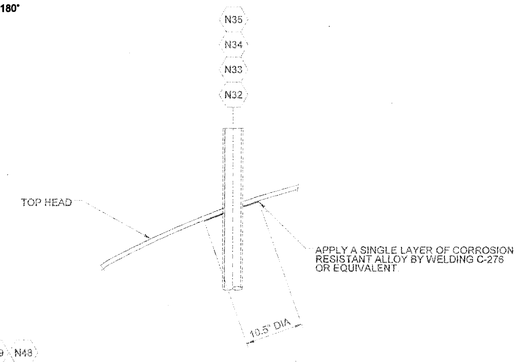

TYPICAL N32, N33, N34 & N35 NOZZLES

NOZZLE	SIZE	SCHED/WALL	SERVICE/REMARKS	"Z" DIM	REF DWG/DET	CONN PIPE SIZE/SCHED
N01	2"	160S	AIR/VAC TO RLD-PJM-00005	19'-2"	24590-WTP-MV-M59T-00016001 DET 3	2"-40S
N02	2"	160S	AIR/VAC TO RLD-PJM-00006	19'-2"	24590-WTP-MV-M59T-00016001 DET 3	2"-40S
N03	2"	160S	AIR/VAC TO RLD-PJM-00007	19'-2"	24590-WTP-MV-M59T-00016001 DET 3	2"-40S
N04	2"	160S	AIR/VAC TO RLD-PJM-00008	19'-2"	24590-WTP-MV-M59T-00016001 DET 3	2"-40S
N05	2"X1"	SEE DETAIL	AIR/VAC TO RLD-VSL-00015A	19'-2"	24590-WTP-MV-M59T-00016001 DET 7	1"-40S
N06	2"X1"	SEE DETAIL	AIR/VAC TO RLD-VSL-00015B	19'-2"	24590-WTP-MV-M59T-00016001 DET 7	1"-40S
N07	1 1/2"	160S	INLET FROM HOP-EJCTR-00053A	19'-2"	24590-WTP-MV-M59T-00016001 DET 4	1 1/2"-40S
N08	1 1/2"	160S	INLET FROM HOP-EJCTR-00053B	19'-2"	24590-WTP-MV-M59T-00016001 DET 4	1 1/2"-40S
N09	2"OD X 1"	SEE DETAIL	OUTLET FROM RLD-RFD-00162B	19'-2"	24590-WTP-MV-M59T-00016001 DET 7	1"-40S
N10	2"	160S	AUTOSAMPLER RETURN	19'-2"	24590-WTP-MV-M59T-00016001 DET 2	2"-40S
N11	2"	160S	OUTLET FROM HOP-EJCTR-3A	19'-2"	24590-WTP-MV-M59T-00016001 DET 2	2"-40S
N12	2"	160S	OUTLET FROM HOP-EJCTR-3B	19'-2"	24590-WTP-MV-M59T-00016001 DET 2	2"-40S
N13	3"	80S	OUTLET FROM RLD-EJCTR-00008	19'-2"	24590-WTP-MV-M59T-00016001 DET 3	3"-40S
N14	24"	PLATE	MANWAY	17'-8"	24590-WTP-MV-M59T-00017 DET 1	CAPPED
N15	2"	160S	OUTLET FROM HOP-EJCTR-00929A	19'-2"	24590-WTP-MV-M59T-00016001 DET 2	2"-40S
N16	2"	160S	OUTLET FROM HOP-EJCTR-00929B	19'-2"	24590-WTP-MV-M59T-00016001 DET 2	2"-40S
N17	3"	80S	OVERFLOW FROM RLD-BRKPT-00007	19'-2"	24590-WTP-MV-M59T-00016001 DET 4	3"-40S
N18	3"	80S	OVERFLOW FROM RLD-BRKPT-00009	19'-2"	24590-WTP-MV-M59T-00016001 DET 4	3"-40S
N19	3"	80S	OVERFLOW FROM HEADER	19'-2"	24590-WTP-MV-M59T-00016001 DET 4	3"-40S
N20	2"OD X 1"	SEE DETAIL	TEMPERATURE	19'-2"	24590-WTP-MV-M59T-00007 ASSY 1, DET 5	1"-10S
N21	2"OD X 1"	SEE DETAIL	TEMPERATURE (SPARE)	19'-2"	24590-WTP-MV-M59T-00007 ASSY 1, DET 5	1"-10S
N22	2"	160S	INLET TO WASH RING	19'-2"	24590-WTP-MV-M59T-00016001 DET 3	2"-40S
N23	2"	160S	INLET TO WASH RING	19'-2"	24590-WTP-MV-M59T-00016001 DET 3	2"-40S
N24	2"	160S	INLET TO WASH DIP TUBE	19'-2"	24590-WTP-MV-M59T-00016001 DET 4	2"-40S
N25	2"	160S	INLET TO WASH DIP TUBE	19'-2"	24590-WTP-MV-M59T-00016001 DET 4	2"-40S
N26	2"	160S	VENT	19'-2"	24590-WTP-MV-M59T-00016001 DET 1	2"-40S
N27	2"	160S	INLET FROM HDH-EJCTR-00002B	19'-2"	24590-WTP-MV-M59T-00016001 DET 4	2"-40S
N28	2"	160S	INLET FROM HDH-EJCTR-00002A	19'-2"	24590-WTP-MV-M59T-00016001 DET 4	2"-40S
N29	2"	160S	SPARE DIP TUBE	19'-2"	24590-WTP-MV-M59T-00016001 DET 4	2"-40S
N30	2"	160S	SPARE DIP TUBE	19'-2"	24590-WTP-MV-M59T-00016001 DET 4	2"-40S
N31	3"	80S	OUTLET FROM RLD-EJCTR-00056	19'-2"	24590-WTP-MV-M59T-00016001 DET 3	3"-40S
N32	2"	160S	STEAM TO RLD-EJCTR-00056	19'-2"	24590-WTP-MV-M59T-00016001 DET 3	2"-40S
N33	2"	160S	STEAM TO RLD-EJCTR-00050	19'-2"	24590-WTP-MV-M59T-00016001 DET 3	2"-40S
N34	2"	160S	STEAM TO RLD-EJCTR-00008	19'-2"	24590-WTP-MV-M59T-00016001 DET 3	2"-40S
N35	2"	160S	STEAM TO RLD-EJCTR-00059	19'-2"	24590-WTP-MV-M59T-00016001 DET 3	2"-40S
N36	1 1/2"	160S	OUTLET FROM HOP-EJCTR-00918A	19'-2"	24590-WTP-MV-M59T-00016001 DET 4	1 1/2"-40S
N37	1 1/2"	160S	OUTLET FROM HOP-EJCTR-00918B	19'-2"	24590-WTP-MV-M59T-00016001 DET 4	1 1/2"-40S
N38	3"	80S	OUTLET FROM RLD-EJCTR-00059	19'-2"	24590-WTP-MV-M59T-00016001 DET 3	3"-40S
N39	3"	80S	OUTLET FROM RLD-EJCTR-00050	19'-2"	24590-WTP-MV-M59T-00016001 DET 3	3"-40S
N40	6"	40S	RADAR LEVEL INSTRUMENT	19'-2"	24590-WTP-MV-M59T-00016003 DET 24	1 1/2"-40S
N41	8"	80S	OVERFLOW	14'-6"	24590-WTP-MV-M59T-00016001 DET 1	8"-10S
N42	6"	40S	RADAR LEVEL INSTRUMENT	19'-2"	24590-WTP-MV-M59T-00016003 DET 24	1 1/2"-40S
N43	2"	160S	AUTO SAMPLE RETURN	19'-2"	24590-WTP-MV-M59T-00016001 DET 2	2"-40S
N44	2"X1"	SEE DETAIL	OUTLET FROM RLD-RFD-00162A	19'-2"	24590-WTP-MV-M59T-00016001 DET 7	1"-40S
N45	6"	40S	RADAR LEVEL INSTRUMENT	19'-2"	24590-WTP-MV-M59T-00016003 DET 24	1 1/2"-40S
N46	6"	40S	SPARE RADAR LEVEL INSTRUMENT	19'-2"	24590-WTP-MV-M59T-00016003 DET 24	1 1/2"-40S
N47	2" OD	SEE DETAIL	PRESSURE	19'-2"	24590-WTP-MV-M59T-00016001 DET 5	1/2"-40S
N48	1 1/2"	160S	INLET FROM RLD-EJCTR-00049A	19'-2"	24590-WTP-MV-M59T-00016001 DET 4	1 1/2"-40S

GENERAL NOTES:

1. **ALL ANCHOR BOLT HOLES SHALL STRADDLE NORMAL VESSEL CENTER LINE.**
2. ALL 'Z' DIMENSIONS MEASURED FROM BOTTOM TANGENT LINE UNLESS OTHERWISE NOTED. FOR SHELL NOZZLE 'Z' DIMENSIONS MEASURED FROM CENTER LINE OF NOZZLE FACE.
3. **FOR DISTANCE OF DIP PIPES (LEGS) TO BOTTOM HEAD USE 2" CLEARANCE, UNLESS OTHERWISE SPECIFIED.**
4. ALL VESSEL THICKNESSES, SCHEDULE/WALL THICKNESS SHOWN ON NOZZLE TABLE ARE MINIMUM. SELLER TO CONFIRM THE ACTUAL SCHEDULE/WALL THICKNESS TO BE USED FOR NOZZLE CONNECTION.
5. **SELLER TO PROVIDE NECESSARY SUPPORT/GUIDE FOR INTERNAL PIPING, CHARGE VESSELS, PULSE JET MIXERS.**
6. **RFD PUMPS AND EJECTORS SHALL BE PROVIDED BY BUYER FOR SELLER TO INSTALL, ALL OTHER INTERNALS SHALL BE DESIGNED, PROVIDED AND INSTALLED BY SELLER.**
7. FOR NOZZLE N24 & N26, END OF DIP TUBE ROUTED TOWARD THE SUCTION AREA OF THE EJECTOR RLD-EJCTR-00008 & RLD-EJCTR-00059.
8. **SELLER SHALL PROVIDE 8 SHIM PACKS COMPRISING OF THE FOLLOWING 10" SQUARE STAINLESS STEEL PLATES:**
   2 PCS-1/4" THICK PLATES
   1 PCS-1/8" THICK PLATES
   2 PCS-1/16" THICK PLATES
9. **SELLER TO FURNISH 10 PIPE DIAMETERS OF STRAIGHT RUN PIPE ON THE DISCHARGE LINE OF THE EJECTOR BEFORE MAKING ANY BENDS.**
10. **FOR BASE SUPPORT AND ANCHORAGE REQUIREMENTS, SEE REFERENCE DRAWING 24590-HLW-DD-S13T-00002007.**
11. FOR TEMPERATURE NOZZLE (N20 & N21), THE DISTANCE OF THE DIP PIPE (LEGS) USE 1'-6" CLEARANCE.
12. EXTEND NOZZLES N11, N12, N15 AND N16 BY 6" MINIMUM, NOZZLE MATERIAL USED SB-622 N06022.
13. **CONTENTS OF THIS DOCUMENT ARE DANGEROUS WASTE PERMIT AFFECTING.**
14. NOZZLE N07, N08, N13, N29, N30, N31, N32, N33, N34, N35, N36, N37, N38 & N39 SHALL BE SB-622 N06022 MATERIAL.
15. **DELETED**

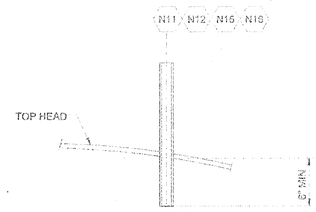

TYPICAL N11, N12, N15 & N16 NOZZLES (NOTE 12)

HOLDS:

1. FINAL NOZZLE LOCATIONS, SIZE AND 'Z' DIMENSIONS PENDING CONFIRMATION BY PLANT DESIGN.
2. **LOCATION FOR NAMEPLATE & BRACKET, ANCHOR BOLT CHAIR BASE PLATE DETAILS, SKIRT VENT AND SKIRT OPENING PENDING PIPING LOCATION BY PLANT DESIGN.**
3. **LOCATION FOR LIFTING LUGS & TAILING LUG PENDING REVIEW BY CONSTRUCTION.**
4. **INTERNALS PENDING CONFIRMATION BY FLUIDIC GROUP.**

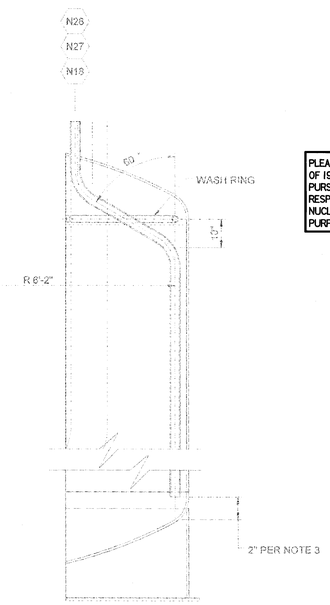

TYPICAL N18,N27 & N28 NOZZLES

PLEASE NOTE THAT SOURCE, SPECIAL NUCLEAR AND BYPRODUCT MATERIALS, AS DEFINED IN THE ATOMIC ENERGY ACT OF 1954 (AEA), ARE REGULATED AT THE U.S. DEPARTMENT OF ENERGY (DOE) FACILITIES EXCLUSIVELY BY DOE ACTING PURSUANT TO ITS AEA AUTHORITY. DOE ASSERTS, THAT PURSUANT TO THE AEA, IT HAS SOLE AND EXCLUSIVE RESPONSIBILITY AND AUTHORITY TO REGULATE SOURCE, SPECIAL NUCLEAR, AND BYPRODUCT MATERIALS AT DOE-OWNED NUCLEAR FACILITIES. INFORMATION CONTAINED HEREIN ON RADIONUCLIDES IS PROVIDED FOR PROCESS DESCRIPTION PURPOSES ONLY.

THIS DRAWING TO BE READ IN CONJUNCTION WITH THE MECHANICAL DATA SHEET NO 24590-HLW-MVD-RLD-P0005

REFERENCE DRAWINGS		
DWG NO	REV	TITLE
24590-HLW-M6-RLD-P0001		P & ID
24590-HLW-M6-RLD-P0006		P & ID
24590-WTP-MV-M59T-00001		PRESSURE VESSEL TOLERANCES STANDARD DETAILS
24590-WTP-MV-M59T-00004		PULSE JET MIXERS STANDARD DETAILS
24590-WTP-MV-M59T-00007		THERMOWELL CONNECTION STANDARD DETAILS
24590-WTP-MV-M59T-00009		LIFTING LUG STANDARD DETAILS
24590-WTP-MV-M59T-00010		TAILING LUG STANDARD DETAILS
24590-WTP-MV-M59T-00011		WASH RINGS STANDARD DETAILS
24590-WTP-MV-M59T-00012		GROUNDING LUG STANDARD DETAILS
24590-WTP-MV-M59T-00013		CHARGE VESSEL STANDARD DETAILS
24590-WTP-MV-M59T-00014		RFD PUMPS DETAIL
24590-WTP-MV-M59T-00016001		VESSEL CONNECTIONS STANDARD DETAILS SHT 1 OF 3
24590-WTP-MV-M59T-00016002		VESSEL CONNECTIONS STANDARD DETAILS SHT 2 OF 3
24590-WTP-MV-M59T-00016003		VESSEL CONNECTIONS STANDARD DETAILS SHT 3 OF 3
24590-WTP-MV-M59T-00017		VESSEL INSPECTION MANWAY STANDARD DETAILS
24590-WTP-MV-M59T-00018		VESSEL NAME PLATE STANDARD DETAILS
24590-HLW-DD-S13T-00002007		HLW VITRIFICATION BLDG CONCRETE EQUIP SUPPORT DET EL (-) 21'-0"
24590-WTP-PW-P30T-00001		WTP END PREP DETAIL FOR FIELD BUTT WELDS

VESSEL COMPONENT QUALITY LEVELS	
COMPONENTS	QUALITY LEVEL
MAIN VESSEL AND NOZZLES	QL-2
SKIRT	QL-2
PULSE JET MIXERS AND ASSOCIATED PIPING	QL-2
CHARGE VESSEL AND ASSOCIATED PIPING	QL-2
PIPING ASSOCIATED WITH EJECTORS & WASH RINGS	CM
PIPING ASSOCIATED WITH RFD'S	QL-2
EJECTORS AND RFD'S (BY OTHERS)	CM

Q

REV	DESCRIPTION	ORG	CHKD	RVWD	APVD	DATE
0	ISSUED FOR PERMITTING USE	RT		RT		8/3/04

REVISION HISTORY

ISSUED BY RPP-WTP PDC 8/3/04 INIT DATE
ISSUE STAMP

	BY	DATE
ORIGINATOR		7/29/04
CHECKER		8/02/04
APPROVER		8/3/04
REVIEWER		8/2/04

CONTENT APPLICABLE TO ALARA? [X] YES [ ] NO
ADR NO. N/A REV:

PROJECT No.	24590
SITE	HANFORD
AREA	200E
BUILDING No.	30

RIVER PROTECTION PROJECT
WASTE TREATMENT PLANT
2435 STEVENS CENTER PLACE
RICHLAND, WA 99352

CONTRACT No: DE-AC27-01RV14136

EQUIPMENT ASSEMBLY ACIDIC WASTE VESSEL RLD-VSL-00007

SCALE: NONE
24590-HLW-MV-RLD-P0003
REV 0

"E SIZE - 44x34"
COMPUTER GENERATED BY SOLID EDGE-MANUAL CHANGES NOT PERMITTED
WHEN REFERENCING DRAWING AND DIM NUMBERS IN DOCUMENTS, BE SURE TO INCLUDE DASHES BETWEEN ELEMENTS
07/12/2004 1:54:55 PM

FORM E_MASTER 03/2003

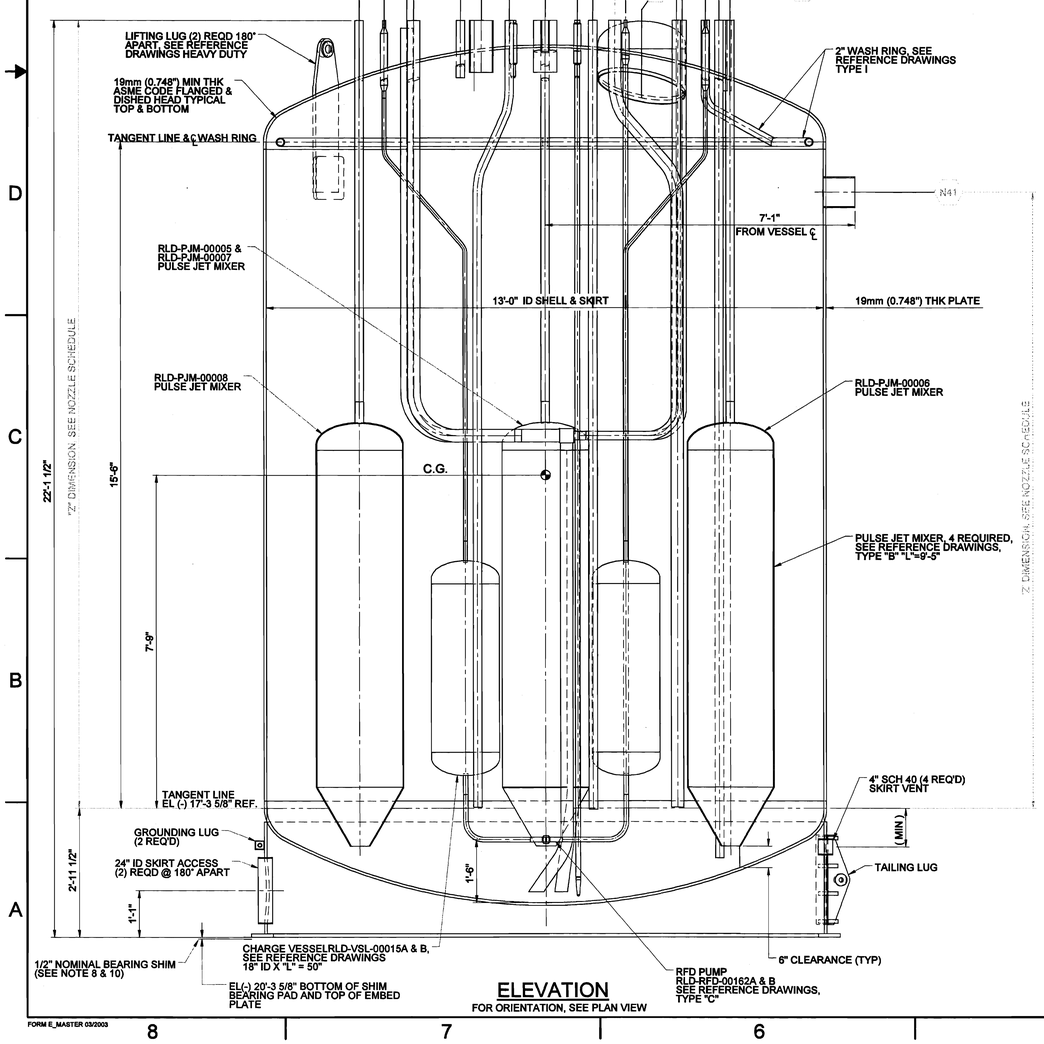

ELEVATION
FOR ORIENTATION, SEE PLAN VIEW

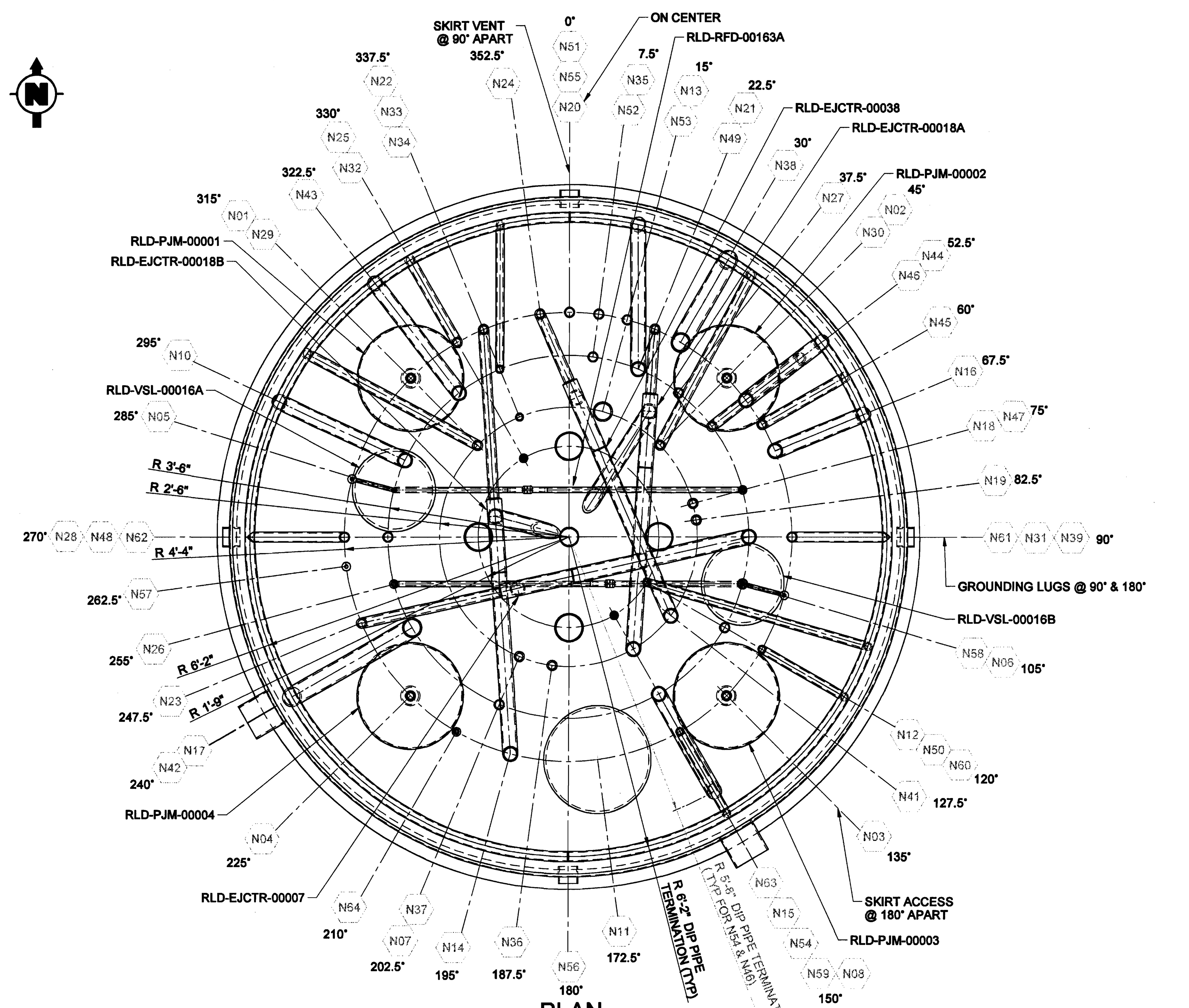

PLAN

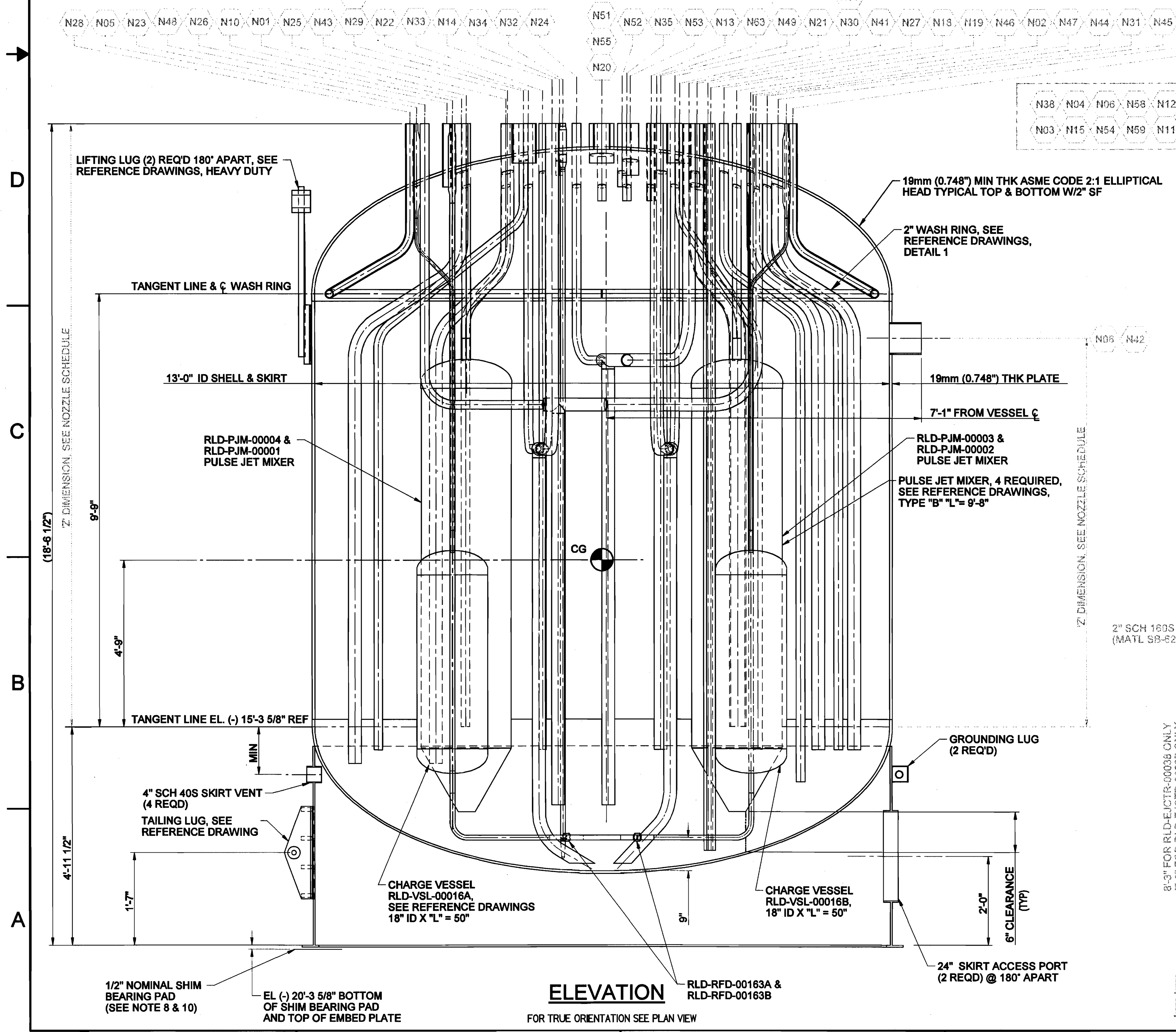

ELEVATION

FOR TRUE ORIENTATION SEE PLAN VIEW

GENERAL NOTES:

1. ALL ANCHOR BOLT HOLES SHALL STRADDLE NORMAL VESSEL CENTER LINE.
2. ALL 'Z' DIMENSIONS MEASURED FROM BOTTOM TANGENT LINE UNLESS OTHERWISE NOTED. FOR SHELL NOZZLE 'Z' DIMENSIONS MEASURED FROM CENTER LINE OF NOZZLE FACE.
3. FOR DISTANCE OF DIP PIPES (LEGS) TO BOTTOM HEAD USE 2" CLEARANCE, UNLESS OTHERWISE SPECIFIED.
4. ALL VESSEL THICKNESSES, SCHEDULE/WALL THICKNESS SHOWN ON NOZZLE TABLE ARE MINIMUM. SELLER TO CONFIRM THE ACTUAL SCHEDULE/WALL THICKNESS TO BE USED FOR NOZZLE CONNECTION.
5. SELLER TO PROVIDE NECESSARY SUPPORT/GUIDE FOR INTERNAL PIPING, CHARGE VESSELS, PULSE JET MIXERS.
6. RFD PUMPS AND EJECTORS SHALL BE PROVIDED BY BUYER FOR SELLER TO INSTALL, ALL OTHER INTERNALS SHALL BE DESIGNED, PROVIDED AND INSTALLED BY SELLER.
7. FOR NOZZLE N18 & N19, END OF DIP TUBE ROUTED TOWARD THE SUCTION AREA OF THE EJECTOR RLD-EJCTR-00018A & RLD-EJCTR-00018B.
8. SELLER SHALL PROVIDE 8 SHIM PACKS COMPRISING OF THE FOLLOWING 10" SQUARE STAINLESS STEEL PLATES:
   - 2 PCS-1/4" THICK PLATES
   - 1 PCS-1/8" THICK PLATES
   - 2 PCS-1/16" THICK PLATES
9. SELLER TO FURNISH 10 PIPE DIAMETERS OF STRAIGHT RUN PIPE ON THE DISCHARGE LINE OF THE EJECTOR BEFORE MAKING ANY BENDS.
10. FOR BASE SUPPORT AND ANCHORAGE REQUIREMENTS, SEE REFERENCE DRAWING 24590-HLW-DD-S13T-00002007.
11. FOR TEMPERATURE NOZZLE (N32 & N63), THE DISTANCE OF DIP PIPE (LEGS) TO BOTTOM HEAD USED 9" CLEARANCE.
12. NOZZLE MATERIAL FOR N08 SHALL BE UNS N08367.
13. NOZZLE N14, N15, N21, N22, N23, N24, N31 & N41 SHALL BE SB-622 N06022 MATERIAL.
14. DELETED

HOLDS

1. FINAL NOZZLE LOCATIONS, SIZE AND 'Z' DIMENSIONS PENDING CONFIRMATION BY PLANT DESIGN.
2. LOCATION FOR NAMEPLATE & BRACKET, ANCHOR BOLT CHAIR BASE PLATE DETAILS, SKIRT VENT AND SKIRT OPENING PENDING PIPING LOCATION BY PLANT DESIGN.
3. LOCATION FOR LIFTING LUGS & TAILING LUG PENDING REVIEW BY CONSTRUCTION.
4. INTERNALS PENDING CONFIRMATION BY FLUIDIC GROUP.

NOZZLE	SIZE	SCH/WALL	SERVICE/REMARKS	"Z" DIM	REF DWG/DET	CONN PIPE SIZE/SCHED
N 01	2"	160S	AIR/VACUUM TO RLD-PJM-00001	13' 7"	24590-WTP-MV-M59T-00016001 DET 3	2"-40S
N 02	2"	160S	AIR/VACUUM TO RLD-PJM-00002	13' 7"	24590-WTP-MV-M59T-00016001 DET 3	2"-40S
N 03	2"	160S	AIR/VACUUM TO RLD-PJM-00003	13' 7"	24590-WTP-MV-M59T-00016001 DET 3	2"-40S
N 04	2"	160S	AIR/VACUUM TO RLD-PJM-00004	13' 7"	24590-WTP-MV-M59T-00016001 DET 3	2"-40S
N 05	2"OD x 1"	SEE DETAIL	AIR/VACUUM TO RLD-VSL-00016A	13' 7"	24590-WTP-MV-M59T-00016001 DET 7	1"-40S
N 06	2"OD x 1"	SEE DETAIL	AIR/VACUUM TO RLD-VSL-00016B	13' 7"	24590-WTP-MV-M59T-00016001 DET 7	1"-40S
N 07	2"	80S	INLET FROM HSH-SUMP-00006	13' 7"	24590-WTP-MV-M59T-00016001 DET 2	2"-40S
N 08	8"	80S	INLET FROM RLD-VSL-00007 (NOTE 12)	8' 11"	24590-WTP-MV-M59T-00016001 DET 1	8"-10S
N 09			DELETED			
N 10	3"	80S	INLET	13' 7"	24590-WTP-MV-M59T-00016001 DET 4	3"-40S
N 11	24"	PLATE	MANWAY	12'-11"	24590-WTP-MV-M59T-00017 DET 1	CAPPED
N 12	1 1/2"	160S	OUTLET FROM RLD-EJCTR-00178	13' 7"	24590-WTP-MV-M59T-00016001 DET 4	1 1/2"-40S
N 13	2"	80S	SPARE	13' 7"	24590-WTP-MV-M59T-00016001 DET 2	CAPPED
N 14	3"	80S	OUTLET FROM RLD-EJCTR-00018B	13' 7"	24590-WTP-MV-M59T-00016001 DET 3	3"-80S
N 15	3"	80S	OUTLET FROM RLD-EJCTR-00018A	13' 7"	24590-WTP-MV-M59T-00016001 DET 3	3"-80S
N 16	3"	80S	INLET	13' 7"	24590-WTP-MV-M59T-00016001 DET 4	3"-40S
N 17	4"	80S	INLET	13' 7"	24590-WTP-MV-M59T-00016001 DET 4	4"-40S
N 18	2"	160S	INLET WASH LINES (DIP LEG)	13' 7"	24590-WTP-MV-M59T-00016001 DET 4	2"-40S
N 19	2"	160S	INLET WASH LINES (DIP LEG)	13' 7"	24590-WTP-MV-M59T-00016001 DET 4	2"-40S
N 20	4"	80S	VENT (SPARE)	13' 7"	24590-WTP-MV-M59T-00016001 DET 1	CAPPED
N 21	2"	160S	STEAM TO RLD-EJCTR-00018A	13' 7"	24590-WTP-MV-M59T-00016001 DET 3	2"-40S
N 22	2"	160S	STEAM TO RLD-EJCTR-00018B	13' 7"	24590-WTP-MV-M59T-00016001 DET 3	2"-40S
N 23	2"	160S	STEAM TO RLD-EJCTR-00007	13' 7"	24590-WTP-MV-M59T-00016001 DET 3	2"-40S
N 24	2"	160S	STEAM TO RLD-EJCTR-00038	13' 7"	24590-WTP-MV-M59T-00016001 DET 3	2"-40S
N 25	2"	160S	INLET FROM DRUM TRANSFER TUNNEL SUMPS	13' 7"	24590-WTP-MV-M59T-00016001 DET 4	2"-40S
N 26	2"OD x 1"	SEE DETAIL	OUTLET TO AUTOSAMPLER	13' 7"	24590-WTP-MV-M59T-00016001 DET 7	1"-40S
N 27	2"	160S	AUTOSAMPLER RETURN	13' 7"	24590-WTP-MV-M59T-00016001 DET 2	2"-40S
N 28	2"	160S	INLET WASH RING	13' 7"	24590-WTP-MV-M59T-00016001 DET 3	2"-40S
N 29	2"	160S	SPARE DIP LEG	13' 7"	24590-WTP-MV-M59T-00016001 DET 4	2"-40S
N 30	2"	160S	SPARE DIP LEG	13' 7"	24590-WTP-MV-M59T-00016001 DET 4	2"-40S
N 31	3"	80S	OUTLET FROM RLD-EJCTR-00007	13' 7"	24590-WTP-MV-M59T-00016001 DET 3	3"-40S
N 32	2"OD	SEE DETAIL	TEMPERATURE	13' 7"	24590-WTP-MV-M59T-00007 ASSY 1 DET 5	1"-40S
N 33	1 1/2"	160S	FROM HFP-SUMP-00002	13' 7"	24590-WTP-MV-M59T-00016001 DET 4	1 1/2"-40S
N 34	1 1/2"	160S	FROM HSH-SUMP-00003	13' 7"	24590-WTP-MV-M59T-00016001 DET 4	1 1/2"-40S
N 35	2"	80S	CRANE MAINTENANCE SUMP	13' 7"	24590-WTP-MV-M59T-00016001 DET 2	2"-40S
N 36	2"	80S	RLD-WBOX-00077	13' 7"	24590-WTP-MV-M59T-00016001 DET 2	2"-80S
N 37	2"	80S	RLD-WBOX-00077	13' 7"	24590-WTP-MV-M59T-00016001 DET 2	2"-80S
N 38	4"	80S	HFP-SUMP-00001	13' 7"	24590-WTP-MV-M59T-00016001 DET 4	4"-40S
N 39	2"	160S	INLET WASH RING	13' 7"	24590-WTP-MV-M59T-00016001 DET 3	2"-40S
N 40			DELETED			
N 41	3"	80S	OUTLET FROM RLD-EJCTR-00038	13' 7"	24590-WTP-MV-M59T-00016001 DET 3	3"-40S
N 42	8"	40S	OVERFLOW	8' 11"	24590-WTP-MV-M59T-00016001 DET 1	8"-10S
N 43	3"	80S	HEADER	13' 7"	24590-WTP-MV-M59T-00016001 DET 4	3"-40S
N 44	3"	80S	OVERFLOW FROM RLD-BRKPT-00004	13' 7"	24590-WTP-MV-M59T-00016001 DET 4	3"-40S
N 45	2"	160S	INLET	13' 7"	24590-WTP-MV-M59T-00016001 DET 4	2"-40S
N 46	2"	160S	INLET	13' 7"	24590-WTP-MV-M59T-00016001 DET 4	2"-40S
N 47	2"OD x 1"	SEE DETAIL	OUTLET TO AUTOSAMPLER	13'-7"	24590-WTP-MV-M59T-00016001 DET 7	1"-40S
N 48	2"	80S	AUTOSAMPLER RETURN	13'-7"	24590-WTP-MV-M59T-00016001 DET 2	2"-40S
N 49	3"	80S	INLET	13'-7"	24590-WTP-MV-M59T-00016001 DET 4	3"-40S
N 50	2"	80S	INLET FROM HFP-EJCTR-00001	13'-7"	24590-WTP-MV-M59T-00016001 DET 2	2"-80S
N 51	2"	80S	INLET FROM HFP-EJCTR-00002	13'-7"	24590-WTP-MV-M59T-00016001 DET 2	2"-80S
N 52	2"	80S	INLET FROM PCW-VSL-00007	13'-7"	24590-WTP-MV-M59T-00016001 DET 2	2"-40S
N 53	4"	80S	DRAIN HEADER	13'-7"	24590-WTP-MV-M59T-00016001 DET 2	4"-40S
N 54	3"	80S	INLET	13'-7"	24590-WTP-MV-M59T-00016001 DET 4	3"-40S
N 55	6"	40S	RADAR LEVEL INSTRUMENT	13'-7"	24590-WTP-MV-M59T-00016003 DET 24	1-1/2"-40S
N 56	6"	40S	RADAR LEVEL INSTRUMENT	13'-7"	24590-WTP-MV-M59T-00016003 DET 24	1-1/2"-40S
N 57	2"OD	SEE DETAIL	AIR INLET	13'-7"	24590-WTP-MV-M59T-00016001 DET 6	1/2"-40S
N 58	2"	80S	INLET FROM NLD-TK-00006	13'-7"	24590-WTP-MV-M59T-00016001 DET 2	2"-40S
N 59	1 1/2"	160S	INLET FROM RLD-EJCTR-00052A	13'-7"	24590-WTP-MV-M59T-00016001 DET 4	1 1/2"-40S
N 60	1 1/2"	160S	INLET FROM RLD-EJCTR-00052B	13'-7"	24590-WTP-MV-M59T-00016001 DET 4	1 1/2"-40S
N61	6"	40S	RADAR LEVEL INSTRUMENT	13'-7"	24590-WTP-MV-M59T-00016003 DET 24	1-1/2"-40S
N62	6"	40S	SPARE RADAR LEVEL INSTRUMENT	13'-7"	24590-WTP-MV-M59T-00016003 DET 24	1-1/2"-40S
N63	2"OD x 1"	SEE DETAIL	TEMPERATURE (SPARE)	13'-7"	24590-WTP-MV-M59T-00007 ASSY 1 DET 5	1"-40S
N64	2"OD	SEE DETAIL	PRESSURE	13'-7"	24590-WTP-MV-M59T-00016001 DET 5	1/2"-40S

PLEASE NOTE THAT SOURCE, SPECIAL NUCLEAR AND BYPRODUCT MATERIALS, AS DEFINED IN THE ATOMIC ENERGY ACT OF 1954 (AEA), ARE REGULATED AT THE U.S. DEPARTMENT OF ENERGY (DOE) FACILITIES EXCLUSIVELY BY DOE ACTING PURSUANT TO ITS AEA AUTHORITY. DOE ASSERTS, THAT PURSUANT TO THE AEA, IT HAS SOLE AND EXCLUSIVE RESPONSIBILITY AND AUTHORITY TO REGULATE SOURCE, SPECIAL NUCLEAR, AND BYPRODUCT MATERIALS AT DOE-OWNED NUCLEAR FACILITIES. INFORMATION CONTAINED HEREIN ON RADIONUCLIDES IS PROVIDED FOR PROCESS DESCRIPTION PURPOSES ONLY.

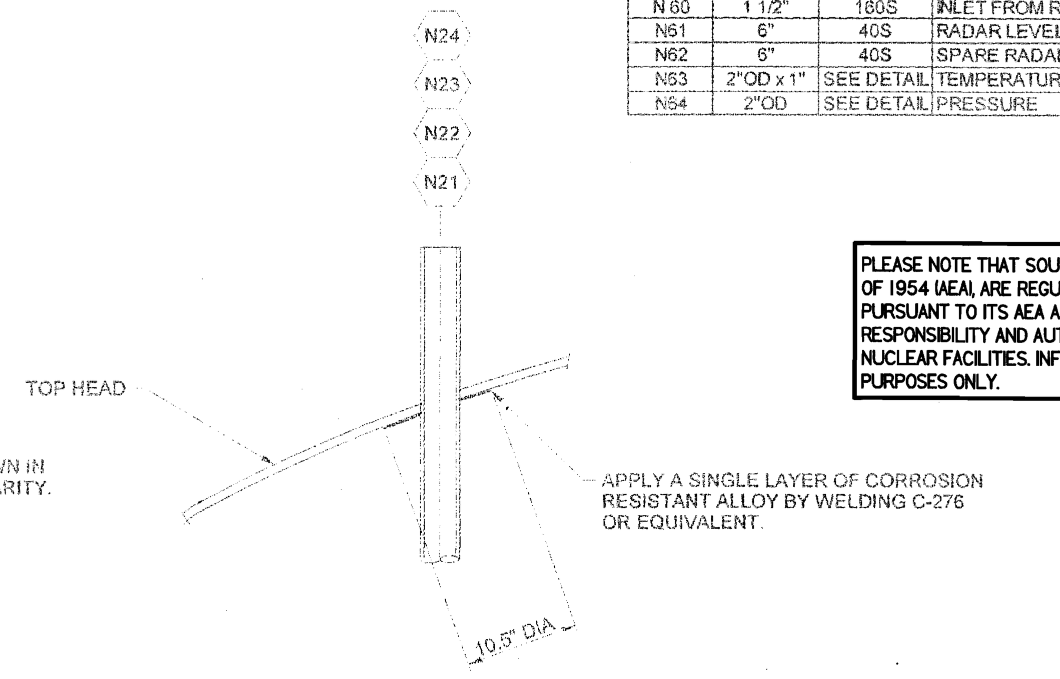

TYPICAL N21, N22, N23 & N24 NOZZLES

VESSEL COMPONENT QUALITY LEVELS	
COMPONENTS	QUALITY LEVEL
MAIN VESSEL AND NOZZLES	QL-I
SKIRT	QL-I
PULSE JET MIXERS AND ASSOCIATED PIPING	QL-I
CHARGE VESSEL AND ASSOCIATED PIPING	QL-I
PIPING ASSOCIATED WITH EJECTORS & WASH RINGS	QL-2
PIPING ASSOCIATED WITH RFD'S	QL-I
EJECTORS AND RFD'S (BY OTHERS)	CM

THIS DRAWING TO BE READ IN CONJUNCTION WITH THE MECHANICAL DATA SHEET NO 24590-HLW-MVD-RLD-P0007

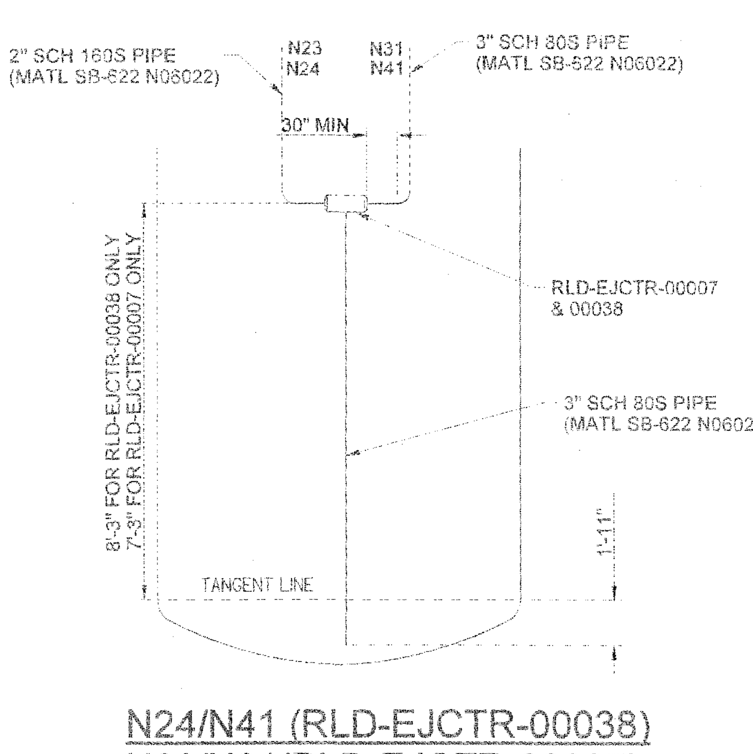

N24/N41 (RLD-EJCTR-00038)
N23/N31(RLD-EJCTR-00007)

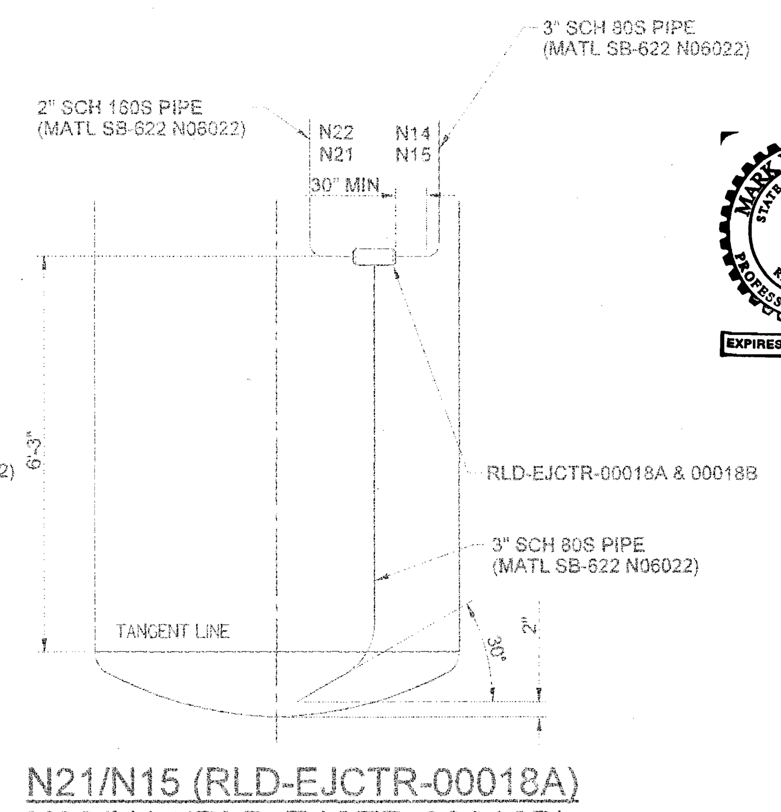

N21/N15 (RLD-EJCTR-00018A)
N22/N14(RLD-EJCTR-00018B)

REFERENCE DRAWINGS		
DWG NO	REV	TITLE
24590-HLW-M6-RLD-P0002		P & ID
24590-HLW-M6-RLD-P0007		P & ID
24590-WTP-MV-M59T-00001		PRESSURE VESSEL TOLERANCES STANDARD DETAILS
24590-WTP-MV-M59T-00004		PULSE JET MIXERS STANDARD DETAILS
24590-WTP-MV-M59T-00007		THERMOWELL CONNECTION STANDARD DETAILS
24590-WTP-MV-M59T-00009		LIFTING LUG STANDARD DETAILS
24590-WTP-MV-M59T-00010		TAILING LUG STANDARD DETAILS
24590-WTP-MV-M59T-00011		WASH RINGS STANDARD DETAILS
24590-WTP-MV-M59T-00012		GROUNDING LUG STANDARD DETAILS
24590-WTP-MV-M59T-00013		CHARGE VESSEL STANDARD DETAILS
24590-WTP-MV-M59T-00014		RFD PUMPS DETAIL
24590-WTP-MV-M59T-00016001		VESSEL CONNECTIONS STANDARD DETAILS SHT 1 OF 3
24590-WTP-MV-M59T-00016002		VESSEL CONNECTIONS STANDARD DETAILS SHT 2 OF 3
24590-WTP-MV-M59T-00016003		VESSEL CONNECTIONS STANDARD DETAILS SHT 3 OF 3
24590-WTP-MV-M59T-00017		VESSEL INSPECTION MANWAY STANDARD DETAILS
24590-WTP-MV-M59T-00018		VESSEL NAME PLATE STANDARD DETAILS
24590-HLW-DD-S13T-00002007		HLW VITRIFICATION BLDG CONCRETE EQUIP SUPPORT DET EL (-) 21'-0"
24590-WTP-PW-P30T-00001		WTP END PREP DETAIL FOR FIELD BUTT WELDS

MARK W. HOFFMANN — STATE OF WASHINGTON — 0030952 — REGISTERED PROFESSIONAL ENGINEER — 8/3/04 — EXPIRES 12/10/04

REV	DESCRIPTION	ORG	CHKD	RVWD	APVD	DATE
0	ISSUED FOR PERMITTING USE	KRB	[signature]	RT	[signature]	8/3/04

REVISION HISTORY

Q

ISSUED BY RPP-WTP PDC 8/5/04 INIT DATE ISSUE STAMP

PROJECT No.	24590
SITE	HANFORD
AREA	200E
BUILDING No.	30

RIVER PROTECTION PROJECT
WASTE TREATMENT PLANT
2435 STEVENS CENTER PLACE
RICHLAND, WA 99352

CONTRACT No: DE-AC27-01RV14136

	BY	DATE
ORIGINATOR	[signature]	7/29/04
CHECKER	[signature]	8/02/04
APPROVER	[signature]	8/3/04
REVIEWER	[signature]	8/2/04

EQUIPMENT ASSEMBLY PLANT WASH & DRAINS VESSEL RLD-VSL-00008

CONTENT APPLICABLE TO ALARA? [X] YES [ ] NO
ADR NO. N/A REV:

SCALE: NONE | 24590-HLW-MV-RLD-P0004 | REV 0

'E' SIZE - 44x34
COMPUTER GENERATED BY SOLID EDGE-MANUAL CHANGES NOT PERMITTED
WHEN REFERENCING DRAWING AND DIM NUMBERS IN DOCUMENTS, BE SURE TO INCLUDE DASHES BETWEEN ELEMENTS
06/03/2004 12:48:22 PM

FORM E_MASTER 03/2003

R10343538