0089397

10-EMD-0080, ENCLOSURE 1

CLASS 1 MODIFICATIONS TO THE HANFORD FACILITY RESOURCE CONSERVATION AND RECOVERY ACT PERMIT QUARTER ENDING JUNE 30 2010

SECTION

2 OF 2

Hanford Facility RCRA Permit Modification Notification Form

Unit:	Permit Part
242-A Evaporator	**Part III, Operating Unit 4**

Description of Modification:
Chapter 8.0, Table 8.1:

Table 8.1. 242-A Evaporator Training Matrix

		Training Category					
Attachment 33 Chapter 8 Training Category		General Hanford Facility Training	Contingency Plan Training	Emergency Coordinator Training	Operations Training		
Operating Unit 4: 242A Evaporator ~~Dangerous Waste Training Plan (TFC-PLN-07) implementing category~~		Orientation Program ~~(Tank Farm and 242-A Evaporator)~~	Emergency Hazards Check List	Building Emergency ~~Coordinator~~ Training	General Waste Management ~~(handling, segregation, & packaging)~~	~~Container Management~~	Tank System Management
Dangerous Waste Worker Categories[1]							
~~Job Title/Position~~	~~Dangerous Waste Worker Categories~~						
~~Nuclear Chemical (Operators)~~	Waste Worker	X	X	X[2]	X	~~X[2]~~	X[2]
~~Shift Technical Advisor (STAs)~~	~~Waste Worker Supervisor/ Manager~~	~~X~~	~~X~~		~~X~~		
~~Shift Manager (SMs)~~	Waste Worker Supervisor/ Manager	X	X	X[2]	X		
~~Operational Engineer (OEs)~~	~~Waste Worker Supervisor/ Manager~~	~~X~~	~~X~~	~~X~~	~~X~~		
~~Environmental Compliance Officer~~	~~Waste Worker Supervisor/ Manager~~	~~X~~	~~X~~	~~X~~	~~X~~		
~~Waste Service Provider~~	Advanced Waste Worker	X	X	X[2]	X	~~X[2]~~	
Building Emergency Director[3]		X	X	X[2]			

[1]Dangerous Waste Worker categories are defined in the Tank Operations Contractor Dangerous Waste Training Plan (TFC-PLN-07 current revision) in the operating record
[2]Training received is commensurate with the duties performed. Individuals in this category who do not perform these duties are not required to receive this training.

WAC 173-303-830 Modification Class	Class 1	Class [1]1	Class 2	Class 3
Please mark the Modification Class:		X		

Enter relevant WAC 173-303-830, Appendix I Modification citation number: A.8
Enter wording of WAC 173-303-830, Appendix I Modification citation:
A.8 General Permit Provisions, Changes to remove permit conditions that are no longer applicable.

Modification [X] Yes [ ] Denied (state reason
Reason for denial:

Reviewed by Ecology:
G. P. Davis 5-13-10
G. P Davis Date

This page intentionally left blank.

Hanford Facility RCRA Permit Modification
Part III, Operating Unit 4
242-A Evaporator

Remove and replace the following sections for Part III, Operating Unit 4:

- Permit Conditions dated December 31, 2009 with Permit Conditions dated June 30, 2010
- Chapter 4 dated December 31, 2009 with Permit Conditions dated June 30, 2010
- Chapter 6 dated December 31, 2009 with Permit Conditions dated June 30, 2010
- Chapter 8 dated December 31, 2009 with Permit Conditions dated June 30, 2010

This page intentionally left blank.

PART III, OPERATING UNIT 4 UNIT-SPECIFIC CONDITIONS

242-A Evaporator

UNIT DESCRIPTION

The 242-A Evaporator is a mixed waste treatment and storage unit consisting of a conventional forced-circulation, vacuum evaporation system to concentrate mixed-waste solutions located in the 200 East Area.

This document sets forth the operating conditions for the 242-A Evaporator.

III.4.A COMPLIANCE WITH UNIT SPECIFIC PERMIT CONDITIONS

The Permittees shall comply with all requirements set forth in the Hanford Facility RCRA Permit (Permit) as specified in Permit Attachment 3, Permit Applicability Matrix, including all approved modifications. All chapters, subsections, figures, tables, and appendices included in the following unit-specific Permit Conditions are enforceable in their entirety.

In the event that the Part III-Unit-Specific Conditions for Operating Unit 4, 242-A Evaporator conflict with the Part I-Standard Conditions and/or Part II-General Facility Conditions of the Permit, the unit-specific conditions for Operating Unit 4, 242-A Evaporator prevail.

CHAPTERS SPECIFIC TO OPERATING UNIT GROUP 4:

Chapter 1.0	Part A Form, dated October 1, 2008
Chapter 2.0	Unit Description, dated August 2004
Chapter 3.0	Waste Analysis Plan, dated September 30, 2007
Chapter 4.0	Process Information, dated June 30, 2010
Appendix 4B	Tank Integrity Assessment, dated December 31, 2002
Chapter 5.0	Groundwater Monitoring, dated (not applicable)
Chapter 6.0	Procedures to Prevent Hazards, dated June 30, 2010 (also refer to Permit Attachment 33, §6.1, Security)
Chapter 7.0	Contingency Plan, dated June 30, 2010
Chapter 8.0	Personnel Training, dated June 30, 2010
Chapter 11.0	Closure and Post Closure Requirements, dated December 31, 2005
Chapter 12.0	Reporting and Recordkeeping (refer to Permit Attachment 33, Table 12.1, Reports and Records)

III.4.B COMPLIANCE WITH UNIT-SPECIFIC PERMIT CONDITIONS

III.4.B.1 Portions of Permit Attachment 4 (DOE/RL-94-02) that are not made enforceable by inclusion in the applicability matrix for that document are not made enforceable by reference in this document.

This page intentionally left blank.

Chapter 4.0 Process Information

4.0 PROCESS INFORMATION 4.1

4.1 TANK SYSTEMS 4.2
4.1.1 Design Requirements 4.2
4.1.2 PC-5000 Transfer line 4.3
4.1.3 Vapor-Liquid Separator (C-A-1) and Ancillary Equipment 4.3
4.1.4 Integrity Assessments 4.7
4.1.5 Additional Requirements for Existing Tanks 4.8
4.1.6 Secondary Containment and Release Detection for Tank Systems 4.8
4.1.7 Variances from Secondary Containment Requirements 4.12
4.1.8 Tank Management Practices 4.13
4.1.9 Labels or Signs 4.14
4.1.10 Air Emissions 4.14
4.1.11 Management of Ignitable or Reactive Wastes in Tank Systems 4.14
4.1.12 Management of Incompatible Wastes in Tank Systems 4.14

4.2 AIR EMISSIONS CONTROL 4.14
4.2.1 Applicability of Subpart AA Standards 4.14
4.2.2 Process Vents - Demonstrating Compliance 4.15

4.3 ENGINEERING DRAWINGS 4.16

Figures

Figure 4.1. 242-A Evaporator Simplified Process Flow Diagram 4.17
Figure 4.2. 242-A Evaporator Process Loop 4.18
Figure 4.3. 242-A Evaporator Slurry System 4.19
Figure 4.4. 242-A Evaporator Process Condensate System 4.20
Figure 4.5. 242-A Evaporator Vacuum Condenser System 4.21
Figure 4.6. 242-A Evaporator Drain System 4.22

Table

Table 4.1. Process and Instrumentation Diagrams 4.16
Table 4.2. 242-A Evaporator Secondary Containment Systems Drawings 4.16

This page intentionally left blank.

4.0 PROCESS INFORMATION

Where information regarding treatment, management, and disposal of the radioactive source byproduct material and/or special nuclear components of mixed waste (as defined by the Atomic Energy Act of 1954 as amended) has been incorporated into this document, it is not incorporated for the purpose of regulating the radiation hazards of such components under the authority of this permit or chapter 70.105 RCW and its implementing regulations but is provided for information purposes only.

The 242-A Evaporator receives mixed waste from the DST System that contains inorganic and organic constituents and radionuclides. A 242-A Evaporator simplified process flow diagram is given in Figure 4.1. The 242-A Evaporator separates the mixed waste received from the DST System, generating the following waste streams:

- A concentrated aqueous waste stream (slurry) containing the nonvolatile components, including most of the radionuclides, inorganic constituents, and nonvolatile organics such as tri-butyl phosphate
- A dilute aqueous waste stream (process condensate) containing the volatile components, primarily water with low concentrations of radionuclides, inorganic constituents, and volatile constituents such as ammonia and acetone.

The slurry is routed back to the DST System pending further treatment. The process condensate is transferred to the LERF for storage until processed through the ETF.

The 242-A Evaporator process employs a conventional forced circulation, vacuum evaporation system to concentrate the DST System waste solution. The major components of this system include the reboiler, vapor-liquid separator, recirculation pump and pipe loop, slurry product pump, condenser, jet vacuum system, and condensate collection tank

The vapor-liquid separator, C-A-1, also called the evaporator vessel, and the condensate collection tank, C-100, meet the definition of a tank in WAC 173-303-040. Other process equipment associated with these tank systems is considered ancillary equipment. Drawings that aid in understanding the systems are provided in Section 4.3.

The 242-A Evaporator receives waste from a DST System tank, 241-AW-102 that serves as the 242-A Evaporator feed tank. The feed enters the recirculation line and blends with the main process slurry stream, which is pumped to the reboiler.

In the reboiler, the mixture is heated to the specified operating temperature, normally 38 to 77EC, using 21 to 69 kilopascals gauge pressure steam. The low-pressure steam provides adequate heat input, and the resulting low-temperature differential across the reboiler minimizes scale formation on the heat transfer surfaces. The static pressure of the waste in the reboiler is sufficient to suppress the boiling point so the waste does not boil in the reboiler tubes. Boiling occurs only near or at the liquid surface in the vapor liquid separator.

The heated slurry stream is discharged from the reboiler to the vapor-liquid separator (C-A-1) that typically is maintained at an absolute pressure of 5.3 to 10.7 kilopascals. Under this reduced pressure, a fraction of the water in the heated slurry flashes to steam and the steam is drawn through two, wire mesh deentrainer pads into a 42-inch diameter vapor line that leads to the primary condenser, leaving behind a more concentrated slurry solution in the vapor-liquid separator.

After a brief residence time in the vapor-liquid separator, the slurry exits from the bottom through the lower portion of the recirculation line and is recirculated by the recirculation pump (P-B-1). The pump discharges the slurry back to the reboiler via the upper portion of the recirculation line, thus completing the recirculation loop.

The specific gravity of the waste liquid is monitored closely to ensure that the target density, established before the beginning of the campaign, is not exceeded. A portion of the slurry is removed from the upper

portion of the recirculation line using the slurry pump (P-B-2) and transferred through an encased underground pipeline (pipe-within-a-pipe) to a designated slurry receiver tank in the DST System.

The vapors are drawn from the vapor-liquid separator, through a 42-inch diameter vapor line and enter a series of three condensers, where the vapors are condensed using raw water. The condensed vapors, called process condensate, are collected in tank C-100. Steam jets are used to create a vacuum on the vapor liquid separator drawing the process vapors into and through the condensers. Noncondensable vapors are drawn from the condensers, then through a series of particulate filters and vented to the atmosphere. The air discharges are monitored continuously when the 242-A Evaporator is operating to verify that standards for radionuclide and ammonia emissions standards are met.

Process condensate contains the volatile constituents of the waste and trace quantities of inorganic materials and radionuclides. The process condensate is pumped from tank C-100 through an encased underground pipeline (pipe-within-a-pipe) to the LERF.

During a campaign, the evaporation process is continuous with typical feed flow rates of 260 to 450 liters per minute, process condensate flow rates of 150 to 230 liters per minute, and slurry flow rates of 110 to 230 liters per minute. The evaporator process is shutdown when the desired endpoint concentration of the slurry is met. Endpoints are established at the beginning of the campaign, based on the target specific gravity of the waste, or allowable waste volume reduction (WVR) and defined operating limits. If the evaporation rate cannot achieve the desired endpoint, slurry in the DST System serving as the slurry receiver is transferred to the feed tank for one or more passes through the 242-A Evaporator. At the end of each campaign, the 242-A Evaporator process equipment is shutdown, emptied, flushed with raw water, and placed in a safe standby mode.

Other discharges during 242-A Evaporator processing include condensate from the steam used to heat the waste and cooling water used to condense the vapors. The 242-A Evaporator is designed to prevent contamination of these streams. The fluids on the uncontaminated side of the heat exchangers are maintained at a higher pressure than the waste stream so that uncontaminated fluid migrates toward the contaminated waste if a leak were to occur. The steam condensate and the cooling water are monitored continuously for radiation, pH, conductivity, and discharged to TEDF as long as none of the discharge limits are exceeded. The steam condensate and cooling water streams were assessed in the stream specific reports (WHC 1990a and WHC 1990b) and are not dangerous waste in accordance with WAC 173-303.

The 242-A Evaporator process is controlled by the MCS. The MCS computer monitors process parameters and controls the parameters where required. Once the configuration parameters and other process control inputs are set, the MCS maintains the process parameters within specified ranges by sending output signals that operate specific pieces of equipment (e.g., control valves).

4.1 TANK SYSTEMS

This section discusses information associated with design requirements, integrity assessments, and any additional requirements for tanks used to treat and store mixed waste in the 242-A Evaporator.

4.1.1 Design Requirements

The following design requirements were addressed in the 242-A Evaporator/Crystallizer Tank System Integrity Assessment Report (IAR) (Appendix 4B):

- Minimum design wall thicknesses and measured wall thicknesses at various points throughout the tank systems
- Design standards used in construction, including references
- Waste characteristics
- Materials of construction and compatibility of materials with the waste being processed
- Corrosion protection

- Seismic design basis evaluation

The conclusion of the integrity assessment report is that the 242-A Evaporator system is not leaking and is fit for use. The inspections, tests, and analyses performed provide assurance that the tank system has adequate design, sufficient structural strength, and sufficient compatibility with the waste to not collapse, rupture, or fail during operation. The report also states that a review of construction files indicates that the building structure was designed and constructed to withstand a design-basis earthquake.

4.1.2 PC-5000 Transfer line

Process condensate from the 242-A Evaporator is transferred to the LERF using a pump located in the 242-A Evaporator and approximately 1,500 meters of pipe, consisting of a 3-inch carrier pipe within a 6-inch outer containment pipeline. Flow through the pump is controlled through a valve at flow rates from 150 to 300 liters per minute.

The encased fiberglass transfer line (PC-5000) exits the 242-A Evaporator below grade and remains below grade at a minimum 1.2-meter depth for freeze protection, until the pipeline emerges at the LERF catch basin, at the corner of each basin. All piping at the catch basin that is less than 1.2 meters below grade is wrapped with electric heat tracing tape and insulated for protection from freezing. Additional detail including information on secondary containment, leak detection and integrity assessment for this line is provided in § 4.1.6.3.3 and §4.1.4.1.

4.1.3 Vapor-Liquid Separator (C-A-1) and Ancillary Equipment

The following sections describe the vapor-liquid separator (C-A-1) and ancillary equipment.

Waste Feed System. Feed to the 242-A Evaporator is supplied via a pump located in the 241-AW-102 feed tank. The feed pump transfers the waste to the 242-A Evaporator through a 3-inch diameter carbon steel transfer pipeline encased in a 6-inch diameter carbon steel pipe to provide secondary containment. The feed pipeline is equipped with a leak detection system.

Samples can be taken from the waste feed when needed. The feed sampler (SAMP-F-1) is located in a sample enclosure located in the hot equipment storage room.

Evaporator Process Loop. The 242-A Evaporator process loop equipment components are as follows:

- Reboiler (E-A-1)
- Vapor-liquid separator (C-A-1)
- Recirculation pump (P-B-1)
- Recirculation loop

Figure 4.2 is a simplified process flow diagram showing the major components of the process loop.

Reboiler (E-A-1). Waste is heated as the waste passes through the reboiler before entering the vapor-liquid separator. The reboiler is a vertical tube unit with steam on the shell-side and process solution on the tube-side. The 364 tubes in the reboiler are enclosed in a 1.03-meter outside diameter, 4.6-meter-long stainless steel shell. Both the reboiler shell and tubes are constructed of 304L stainless steel. The shell is 0.64 centimeter thick and the tubes are 14-gauge steel. The reboiler is designed to distribute steam evenly and to prevent tube damage from water droplets that may be present in the steam.

Vapor-Liquid Separator (C-A-1). Process solution from the reboiler enters the vapor-liquid separator via the upper recirculation line. Some of the solution flashes into vapor, which exits through a vapor line at the top of the vapor-liquid separator. The remaining solution (slurry) exits through the recirculation line at the bottom.

The separator consists of a lower and upper section. The lower (liquid) section is a stainless steel shell 4.3 meters in diameter having an 85,200 to 94,600 liter normal operating capacity (including recirculation loop and reboiler). The maximum design capacity is 103,000 liters. The upper (vapor) section is a stainless steel shell 3.5 meters in diameter containing two deentrainment pads. These wire mesh pads remove liquids and solids that entrain into the vapor section of the vessel. Spray nozzles, using recycled

process condensate or filtered raw water, wash collected solids from the deentrainment pads and vessel walls. Both sections of the vapor-liquid separator are constructed of 0.95-centimeter-thick stainless steel.

Operating parameters in the vapor-liquid separator are monitored to provide an indication of process problems such as slurry foaming, deentrainer flooding, or excessive vapor temperatures. Instrumentation also is available to monitor the liquid levels in the vapor-liquid separator. Interlocks are activated when high pressures or high- or low-liquid levels are detected, shutting down the evaporation process and placing the facility in a safe configuration.

The vapor-liquid separator and recirculation loop can be flushed to remove any residual solids from the system and/or to reduce radiation levels. The most common flush solution is water, but dilute nitric or citric acid solutions could be used. All acidic flush solutions are chemically adjusted to meet DST acceptance criteria before transfer to the DST System. Antifoam solution is added (at very low flow rates - approximately 0.04 to 0.4 liters per minute) to the vessel to prevent foaming. The antifoam solution is a noncorrosive, nonregulated silicone-based solution that is compatible with the evaporator components.

Recirculation Pump. The stainless steel recirculation pump (P-B-1), is constructed as part of the recirculation loop to the reboiler. The 28-inch diameter axial flow pump has 60,900 liters per minute output. The recirculation pump is designed to handle slurry up to 30 percent undissolved solids by volume at specific gravities up to 1.8. The recirculation pump moves waste at high velocities through the reboiler to improve heat transfer, keep solids in suspension, and reduce fouling of the heat transfer surfaces.

The recirculation pump is equipped with shaft seals with high-pressure recycled process condensate (or water) introduced between the seals to prevent the waste solution from leaking out of the system. Seal water pressure and flow are monitored and controlled to shut down the recirculation pump if conditions are not adequate to prevent waste liquid from migrating into the seal water. The used seal water is routed to the feed tank.

Recirculation Loop. The recirculation loop consists of a 28-inch diameter stainless steel pipe that connects the vapor-liquid separator to the recirculation pump and reboiler. The lower loop runs from the bottom of the vapor-liquid separator to the recirculation pump inlet. The upper loop connects the pump discharge to the reboiler and the reboiler to the vapor-liquid separator. The feed line from the feed tank and the slurry line to underground storage tanks are connected to the upper recirculation line.

Slurry System. The slurry system draws a portion of the concentrated waste from the upper recirculation loop and transfers it to the DST System. The major components of the slurry system are the slurry pump and the slurry transfer pipelines. Figure 4.3 shows a simplified flow diagram of the slurry system. These components are described in the following paragraphs.

The slurry pump (P-B-2) is used to transfer slurry from the recirculation loop to the underground storage tanks. The pump is driven by a variable speed motor and is constructed of 304L stainless steel. The slurry pump is designed to generate high pressures to alleviate the possibility of a transfer line plugging.

Interlocks control the operation of the slurry pump. The slurry pump (P-B-2) is shutdown if any of the following occur:

- Excessive pressure is detected in the slurry lines to 241-AW Tank Farm
- A leak is detected in the slurry transfer lines secondary containment
- A leak is detected in the 241-AW Tank Farm process pits where the transfer lines enter the DST System.

The slurry pump uses a shaft seal with recycled process condensate (or water) and pressure and flow controls similar to the system described above for the recirculation pump.

Transfer pipelines are 2-inch diameter, carbon steel encased lines which route slurry to a designated underground DST within the 200 East Area. All transfer pipelines are encased in a secondary containment pipe and equipped with leak detectors between the primary and encasement piping. The

pipelines are sloped to drain to the valve pit. The detection of any leak by the automated leak detection system shuts off the slurry pump. In lieu of the MCS automated shutdown, the slurry pump (P-B-2) can be manually shutdown at the direction of the Shift manager or 242-A Evaporator Control Room operator if a leak occurs.

The flow rate of the slurry transfer to the DST System is monitored and a decrease in flow below a specified value automatically will shut down the slurry pump (P-B-2) and initiate a line flush with water. The objective of flushing the transfer line is to prevent settling of solids, which precludes plugging the slurry transfer lines.

Samples can be taken from the slurry line when needed via a sampler (SAMP-F-2) that is located near the feed sampler in the load out and hot equipment storage room.

4.1.3.1 Condensate Collection Tank (C-100) and Ancillary Equipment

The following section discusses the condensate collection tank (C-100) and ancillary equipment. This equipment collects process condensate via the condensers in the vacuum condenser system, filters the condensate, and pumps the process condensate to LERF. Figure 4.4 provides a simplified process flow diagram showing the major components of the process condensate system. The following major components make up the process condensate system:

- Vacuum condenser system
- Condensate collection tank (C-100)
- Process condensate pump (P-C-100)
- Condensate filters (F-C-1, F-C-2, and F-C-3)
- Process condensate radiation monitoring, sampling system and diversion system (RC3)
- Seal pot
- Process condensate recycle system
- Vessel Vent System

Vacuum Condenser System. Vapors removed from the vapor-liquid separator flow to a series of three condensers where the vapors are condensed using raw water. Condensate drains to the condensate collection tank (C-100). The vacuum condenser system consists of the following major components:

- Primary condenser (E-C-1)
- Intercondenser (E-C-2)
- Aftercondenser (E-C-3)
- Steam jet ejectors (J-EC1-1 and J-EC2-2)

Figure 4.5 provides a simplified process flow diagram showing the major components of the vacuum condenser system. These system components are discussed in the following sections.

Primary Condenser (E-C-1). Vapors drawn from the vapor-liquid separator flow through the 42-inch (3.5 feet) vapor line, into the E-C-1 condenser where the majority of the condensation takes place. Noncondensed vapors exit to the intercondenser (E-C-2) while the condensed vapors (process condensate) drain to the condensate collection tank (C-100). Cooling water passes through the cooling tubes and exits to TEDF.

The carbon steel condenser shell measures approximately 5.3 meters (17.4 feet) long and has a 2.2-meter (7.2 feet) inside diameter. The condenser consists of 2,950 equally spaced carbon steel tubes that are 3.6 meters (11.8 feet) long with a 1.9-centimeter (0.75 inches) outside diameter.

Intercondenser (E-C-2). Noncondensed vapors from E-C-1 enter the intercondenser. The vapor stream contacts the cooling tubes in the condenser where cooling water provides additional condensation. The condensate drains to the condensate collection tank (C-100). Noncondensed vapors and used cooling water are routed to the after condenser.

The carbon steel intercondenser measures 2.2 meters (7.2 feet) long with a 0.39 meter (1.3 feet) inside diameter. This heat exchanger contains 144 tubes that are 1.7 meters (5.6 feet) long with a 1.9-centimeter (0.75 inches) outside diameter.

After condenser (E-C-3). Vapor discharged from the intercondenser enters the after condenser. Cooling is supplied to the after condenser by the cooling water from the intercondenser. Condensate is routed to the condensate collection tank (C-100), while the noncondensed vapors are filtered, monitored, and discharged to the atmosphere through the vessel ventilation system. The cooling water is discharged to TEDF.

The carbon steel after condenser measures 2.3 meters (7.5 feet) long and has a 0.20-meter (0.66 feet) inside diameter. This heat exchanger contains 45 tubes that are 1.8 meters (5.9 feet) long with a 1.9-centimeter (0.75 inches) outside diameter.

Steam Jet Ejectors. The vacuum that draws the vapors from C-A-1 into the condensers is created by a two-stage steam jet ejector system. The first-stage jet ejector (J-EC1-1) maintains a vacuum on the primary condenser, which in turn creates a vacuum on the vapor-liquid separator. The ejector consists of a steam jet, pressure controller, and air bleed-in valve. Steam and noncondensed vapors from the primary condenser are ejected from J-EC1-1 into the intercondenser. The desired vacuum is obtained by controlling steam pressure and bleeding ambient air as necessary into the vapor header through an air intake filter. The second-stage jet ejector (J-EC2-1) creates the vacuum that moves vapors from the intercondenser through the after condenser.

Condensate Collection Tank (C-100). Process condensate from the primary condenser, intercondenser, after condenser, and the vessel ventilation system drain to the condensate collection tank (C-100). The tank is 4.3 meters in diameter, 5.8 meters high, and is constructed of 0.79-centimeter (0.31 inches)-thick stainless steel. The tank has a maximum design capacity of 67,400 liters (17,805 gallons). Normal operating volume is approximately 50 percent of the tank capacity. A carbon steel base supports the tank. An agitator is installed but not used.

In the event of a tank overflow, the solution is routed through an overflow line to the drain system, which returns waste to the feed tank (241-AW-102). Overflow occurs when the volume exceeds about 60,600 liters. The overflow line is equipped with a liquid filled trap to isolate the drain system from the tank.

Process feed samples are evaluated for the presence of a separate organic layer and process controls are used to reduce the risk of the condensate collection tank to receive small amounts of immiscible organics with the condensed waste. If detected, the organic layer is removed by overflowing tank C-100 back to the feed tank 241-AW-102. The liquid level in the tank is controlled well above the discharge pump intake point and a controlled overflow is conducted upon completion of each processing cycle (campaign) to ensure that an organic layer does not accumulate and cannot be pumped to LERF.

Process Condensate Pump. A pump (P-C-100) moves the process condensate from tank C-100 through the condensate filter to LERF. The process condensate pump is a centrifugal pump constructed of 316 stainless steel.

Condensate Filters. After leaving the condensate collection tank, the process condensate is filtered to remove solids. The primary condensate filter (F-C-1) has a welded steel housing. A second filter system (F-C-3), installed downstream is also used to filter the process condensate. This system has duplex in-line filters in cast iron housing. Both filters employ a filter material that is compatible with the process condensate.

Process Condensate Radiation Monitoring, Sampling and Diversion System. The process condensate transferred to LERF is monitored continuously for radiation. If radiation levels exceed established limits, an alarm is received and interlocks immediately divert the stream back to the condensate collection tank (or the feed tank) and shut off the process condensate pump. This ensures process condensate containing

excessive radionuclides due to an accidental carryover from the vapor-liquid separator is not transferred to LERF.

Seal Pot. The condensate collection tank receives condensed liquids from the vessel ventilation system. A seal pot collects the drainage before discharge into the condensate collection tank and isolates the tank from the vessel ventilation system.

Condensate Recycle System. For waste minimization, a portion of the process condensate from tank C-100 is recycled for use as decontamination solution for the deentrainment pad sprays and seal water for the recirculation pump (P-B-1) and slurry pump (P-B-2). Use of process condensate instead of raw water results in approximately 10 percent reduction in waste volume generated during continuous operation of the 242-A Evaporator. Filtered raw water also is available as a backup for sprays and seal water. A 2-inch (5.1 centimeters) diameter carbon steel line, stainless steel centrifugal pump (P-C106), and filters (F-C-5 and F-C-6) supply process condensate from tank C-100 to the pad sprays and pump seals. The filters are disposable cartridge filters in carbon steel housings arranged in parallel with one filter in service while the other is in standby.

4.1.4 Integrity Assessments

The integrity assessment report (Appendix 4B, Integrity Assessment Report) discusses:

- The standards used during design and construction of the 242-A Evaporator and the adequacy of those standards
- The characteristics of the DST waste processed
- The adequacy of the materials of construction to provide corrosion protection from the waste processed
- The age of the tanks and the affect of age on tank integrity
- The results of the leak tests, visual inspections, and tank wall thickness inspections
- The frequency and scope of future integrity assessment
- Deficiencies in secondary containment design. These deficiencies are discussed in-the integrity assessment report.

An independent, qualified, registered professional engineer certified the integrity assessment.

The inspections, tests, and analyses performed provide assurance that the 242-A Evaporator tank system has adequate design, sufficient structural strength, and sufficient compatibility with the waste to not collapse, rupture, or fail during operation. No evidence of degradation was noted during the visual test, ultrasonic test, or leak test. Both condensate collection tank C-100 and the vapor-liquid separator/reboiler loop passed leak tests. The frequency of subsequent integrity assessments has been established at every 10 years. This frequency is based on the results of the 1998 integrity assessment.

4.1.4.1 PC-5000

An integrity assessment for PC-5000 was performed, including a hydrostatic leak/pressure test at 10.5 kilograms per square centimeter gauge (150 pounds per square inch). A statement by an independent, qualified, registered professional engineer attesting to the integrity of the piping system is included in *Integrity Assessment Report for the 242-A Evaporator/LERF Waste Transfer Piping, Project W105* (WHC 1993), along with the results of the leak/pressure test. The next integrity assessment for PC-5000 will be conducted in the calendar year 2008. The schedule for conducting integrity assessments will be at a frequency of every 10 (calendar) years unless otherwise required by an IQRPE or as required for system repairs and upgrades. All integrity assessments will be conducted in accordance with WAC 173-303-640.

4.1.5 Additional Requirements for Existing Tanks

Refer to information in Section 4.1.2 and the integrity assessment report, which includes measuring tank wall thicknesses, evaluating corrosion protection, and performing leak tests.

4.1.6 Secondary Containment and Release Detection for Tank Systems

This section describes the design and operation of secondary containment sumps, drain lines, and leak detection systems for the 242-A Evaporator.

4.1.6.1 Requirements for All Tank Systems

The Construction Specification for 242-A Evaporator-Crystallizer Facilities Project B-100 (Vitro 1974) was used during preparation, design, and construction of the tank and secondary containment systems. The integrity assessment report details how the construction specification relates to the national codes and standards.

Constructing the building and vessels per this specification ensures that foundations are capable of supporting tank and secondary containment systems and that uneven settling and failures from pressure gradients do not occur. The integrity assessment report (Appendix 4B) states that the 242-A Evaporator has adequate design, sufficient structural strength, and sufficient compatibility with the wastes to not collapse, rupture, or fail during service loads associated with normal operations and that the building structure was designed and constructed to withstand a design basis earthquake".

The integrity assessment report (Appendix 4B) describes the building and secondary containment system. This system is designed to ensure any release is detected within 24 hours. The secondary containment system also is designed to contain 100 percent of the maximum operating capacity of the vapor-liquid separator/reboiler loop, and the drain systems are sloped to allow collection of solution and have sufficient capacity to drain this volume in less than the required 24 hours.

The integrity assessment report describes the protective coating material and sealant used to protect concrete and joints from attack by leaks to the secondary containment. The materials of construction for the sump and drain lines are also compatible with the waste processed at the 242-A Evaporator.

4.1.6.2 242-A Building Secondary Containment

The 242-A Building serves as a secondary containment vault for the vapor-liquid separator (C-A-1), condensate collection tank (C-100), and ancillary equipment used for transferring mixed waste at the 242-A Evaporator. The concrete for the operating area was poured to form a monolithic structure. Where needed, joints in the concrete were fabricated with preformed filler conforming to the standards of the American Society of Testing and Materials. Joint filler is sealed with a polysulfide sealant per the requirements of the construction specifications (Vitro 1974).

Before restart in 1994, a new acrylic special protective coating was applied to the concrete in the pump, evaporator, and condenser rooms. The coating meets the requirements of the construction specifications (Vitro 1974), including resistance to very high radiations doses, temperatures of 77o C, and spills of 25 percent caustic solution.

The following six rooms contain equipment used to process or store*mixed waste:

- Pump room
- Evaporator room
- Condenser room
- Ion exchange room
- Load out room* (used for temporary storage of mixed waste)
- Hot equipment storage room.

4.1.6.2.1 Pump Room

The pump room secondary containment walls are 0.38 to 0.56-meter (1.25 to 1.84-feet) thick reinforced concrete. The secondary containment floor is 0.51-meter-thick reinforced concrete. The pump room floor is lined with 0.64-centimeter (0.25-inch) stainless steel and the concrete walls and ceiling cover blocks are painted with a special protective coating. The pump room contains pipe jumpers used to transport feed and slurry solutions between the vapor-liquid separator and the DST System, and the process recirculation loop, recirculation pump (P-B-1), and slurry pump (P-B-2).

Leaks in the pump room collect in the pump room sump, a 1.5-meter (4.9-feet) by 1.5-meter (4.9-feet) by 1.8-meter (5.9 feet) deep sump with a 0.64-centimeter (0.25-inch) stainless steel liner. The pump room sump collects spills from various sources for transfer to the feed tank, 241-AW-102. Figure 4.6 provides a simplified process flow schematic of sources, which drain to the pump room sump. Drainage to the sump includes:

- Leaks to the pump room floor from equipment in the pump room
- Evaporator room floor drain
- Hot equipment storage room floor drain
- Load out room floor drain
- Raw water backflow preventer drain

Solution in the pump room sump is transferred to the feed tank (241-AW-102) using a steam jet. A 10-inch secondary containment overflow line is provided for draining large volumes of solution should a catastrophic tank failure occur. Because the overflow line provides a direct path between the air space of tank 241-AW-102 and the pump room, a minimum level of water must be maintained in the sump to prevent cross ventilation. A leak into the pump room sump would be detected by a rise in the sump level. Instrumentation provided alarms on high sump level.

The recirculation and slurry pumps in the pump room are equipped with mechanical seals having pressurized water introduced between the seals. The seal water is maintained at a pressure that exceeds the process pressure at the seal to ensure water leaks into the process solution, but waste solution does not leak out. Water from seal leakage is collected in funnels in the pump room and routed to feed tank 241-AW-102 via the 10-inch overflow line described previously.

4.1.6.2.2 Evaporator Room

The evaporator room secondary containment walls are 0.56-meter-thick reinforced concrete. The secondary containment floor is 0.51-meter-thick reinforced concrete. The evaporator room contains the vapor-liquid separator vessel (C-A-1), part of the recirculation loop, the reboiler, the 42-inch vapor line, and line used to empty the vapor-liquid separator to feed tank 241-AW-102.

Leaks in the evaporator room flow to a floor drain that routes through a 3-inch line to the pump room sump described in Section 4.1.6.2.1. A leak in the evaporator room would be detected by a rise in the pump room sump level. The floor of the evaporator room and a portion of the pump room floor are 3.0 meters below grade to contain the entire contents of the vapor-liquid separator, reboiler, and recirculation loop in the event of a catastrophic failure. The floor and walls of the evaporator room up to an elevation of 1.8 meters are painted with a special protective coating.

4.1.6.2.3 Condenser Room

The condenser room secondary containment walls are 0.36- to 0.56-meter-thick reinforced concrete. The secondary containment floor is 0.51-meter-thick reinforced concrete. The condenser room contains all the components of the process condensate system described in Section 4.1.3.1 (refer Figure 4.4), including tank C-100.

Leaks in the condenser room flow to two floor drains that join and route through a 6-inch line to feed tank 241-AW-102. Leaks in the condenser room are detected by the following:

- Unexpected changes in liquid level in tank C-100. Instrumentation is provided to monitor liquid level in the tank, including high- and low-level alarms.
- Daily visual inspections of process condensate system components and piping.

The floor and walls of the condenser room up to an elevation of 1.2 meters are painted with a special protective coating.

4.1.6.2.4 Load out and Hot Equipment Storage Rooms

The load out and hot equipment storage rooms secondary containment walls are 0.30- to 0.56-meter (0.98- to 1.84-feet) thick reinforced concrete. The secondary containment floors are 0.15-meter (0.49-feet) thick reinforced concrete. The room contains two recirculation lines and samplers used to sample the feed and slurry streams. The lines and samplers are located in a shielded enclosure adjacent to the pump room wall.

The load out and hot equipment storage room contains two sumps: the drain sump and decontamination sump. The sumps are 0.91 meter in diameter, about 1.2 meters deep, and lined with stainless steel. Both sumps drain via a 3-inch drain line to the pump room sump described in Section 4.1.6.2.1. The sumps, floor, and walls of the load out and hot equipment storage room up to an elevation of 3.8 meters are painted with a special protective coating.

Leaks in the sampler piping, flow into two drains in the sample enclosure, which drain via a 2-inch line to the decontamination sump, which drains to the pump room sump (described in 4.1.6.2.1). Leak detectors in the sampler enclosures or a rise in the pump room sump level detects leaks in the sampler piping.

4.1.6.2.5 242-A Building Drain Lines

Figure 4.6 provides a simplified process flow schematic of sources routed to the 242-A Building drain lines. The 242-A TSD unit boundary includes these lines up until they exit the 242-A Building. At this point, the lines are considered DST system components. Four lines serve to drain the 242-A Building and equipment to feed tank 241-AW-102:

- Pump room sump drain line (DR-334): a 10-inch carbon steel line that transfers process condensate overflow/diverted liquids and empty out of the pump room sump to the feed tank
- Vapor-liquid separator vessel drain line (DR-335): a 10-inch carbon steel line that allows gravity drain of the vessel to the feed tank
- Condenser room drain line (DR-343): a 6-inch carbon steel line that drains potential leakage from the condenser room.
- Diverted process condensate drain line (DR-338): process condensate liquid drains through DR-338 into sump drain line (DR-334) which drains to 241-AW-102.

The four lines are sloped to drain about 170 meters to feed tank 241-AW-102 via the drain pit (241-AW-02D). Although WAC 173-303-640(1)(c) exempts systems that serve as secondary containment from requiring secondary containment, drain lines DR-334, DR-335, and DR-338 have outer encasement piping.

The drain lines are connected to a cathodic protection system to prevent external corrosion from contact with the soil. The cathodic protection system consists of:

- A rectifier that converts supplied alternating current voltage to an adjustable direct current voltage
- Numerous anodes buried near the underground piping and connected to the rectifier.
- Return wiring that connects the piping to the rectifier, completing the circuit.
- The rectifiers are inspected to component degradation has not occurred. Test stations along the system are checked annually to verify 0.85 volt is maintained on the system, as required by the National Association of Corrosion Engineers.

Further detail regarding design and construction of DR-334,-335,-338 and -343 is provided in DOE/RL-90-39 (Hanford Facility Dangerous Waste Permit Application Double-Shell Tank System). Further detail regarding the design, operation, maintenance, and inspection of the cathodic protect system for these lines are also provided in DOE/RL-90-39.

4.1.6.3 Transfer Line Containment

This section describes the design and operation of secondary containment and leak detection systems for transfer lines between the DST System and the 242-A Evaporator, and from 242-A to LERF (one line only, PC-5000). The 242-A TSD boundary for lines running between 242A and the DST System ends at exterior wall of 242-A building. At this point, these lines (e.g., feed and slurry line piping) are DST System components. For further detail regarding SN-269, SN-270, SL-167, and SL-168 refer to DOE/RL-90-39.

The PC-5000 transfer line transfers process condensate (Section 4.1.2) from the 242-A building to LERF. The 242-A TSD unit boundary includes PC-5000 up to the LERF fence line (Chapter 1.0, topographic map, and Section 4.1.2, for the TSD unit boundary)

4.1.6.3.1 Feed Line Piping

Two feed lines (SN-269 and SN-270) (one in service and one spare), each consist of 3-inch transfer piping within a 6-inch secondary containment encasement piping. Both the transfer and encasement pipes are constructed of Schedule 40 carbon steel. The lines run below grade about 120 meters from pump pit 241-AW-02E (above feed tank 241-AW-102) to the 242-A Building.

To detect transfer-piping failures, leak detector risers equipped with conductivity probes are installed on the encasement lines. The transfer piping and encasements are sloped towards the conductivity probe, which, on leak detection, annunciates an alarm in the 242-A Evaporator control room. A valve in the pump pit (241-AW-02E) can be opened to drain solution from the encasement pipe into the pit, which drains to feed tank 241-AW-102.

4.1.6.3.2 Slurry Line Piping

The slurry pump (P-B-2) transfers solution through one of two transfer lines: SL-167, for transfer to valve pit 241-AW-B (standard configuration), or SL-168 for transfer to valve pit 241-AW-A (alternate configuration). Slurry solution can be routed via double-encased piping from these valve pits to any designated DST slurry receiver. Both slurry transfer lines consist of 2-inch transfer piping within a 4-inch secondary containment encasement piping. Both the transfer and encasement pipes are constructed of Schedule 40 carbon steel. The lines run below grade about 73 meters between the 242-A Building and the valve pits.

These slurry lines contain leak detector risers and conductivity probes similar to the feed line piping described in Section 4.1.6.3.1.

4.1.6.3.3 PC-5000

The process condensate transfer line (PC-5000) from the 242-A Evaporator is centrifugally cast, fiberglass-reinforced epoxy thermoset resin pressure pipe fabricated to meet the requirements of ASME D2997 (ASME 1984). The 3-inch (7.6-cm) carrier piping is centered and supported within 6-inch (15.2-cm) containment piping. Pipe supports are fabricated of the same material as the pipe, and meet the strength requirements of ANSI B31.3 (ANSI 1987) for dead weight, thermal, and seismic loads.

Drawing H-2-79604 provides details of the piping from the 242-A Evaporator to LERF.

This permit includes the portion of the PC-5000 line leaving the 242-A Evaporator facility to the fence line of LERF (Chapter 1.0 and topographic maps for unit boundary).

Single-point electronic leak detection elements are installed along the transfer line at 305-meter (1000 foot) intervals. The leak detection elements are located in the bottom of specially designed test risers. Each sensor element employs a conductivity sensor, which provides a signal to the

242-A Evaporator control room when a potential leak is detected. If a leak develops in the carrier pipe, fluid will travel down the exterior surface of the carrier pipe or the interior of the containment pipe. As moisture contacts a sensor unit, a general alarm sounds in the 242-A Evaporator control room on the Monitoring Control System. In addition, the zone of the sensor unit causing the general alarm can be determined using the leak detection-monitoring panel. Upon verification of a leak, the pump located in the 242-A Evaporator is shut down, stopping the flow of aqueous waste through the transfer line. A low-volume air purge of the annulus between the carrier pipe and the containment pipe is provided to prevent condensation buildup and minimize false alarms by the leak detection elements.

If a leak is detected using visual inspection of the PC-5000 transfer line encasement at the encasement catch tank (TK-PC-101) in the LERF catch basin (242AL-43), the shift manager is notified. The Shift Manger will direct shutdown of the aqueous waste through the PC-5000 transfer line.

4.1.6.4 Additional Requirements for Specific Types of Systems

Addressed in this section are additional requirements in WAC 173-303-640 for vault systems like the 242-A Building to ensure neither buildup of ignitable vapors nor does infiltration of precipitation occur. This section also addresses secondary containment for ancillary equipment and piping associated with the tank systems.

4.1.6.4.1 Vault Systems

The 242-A Building is a vault constructed partially below ground, providing secondary containment for the tank systems. The DST System waste processed at the 242-A Evaporator is designated ignitable and reactive because of the presence of nitrite and nitrate salts, which are considered oxidizers per 49 CFR 173. Because of their low volatility, these compounds are unlikely to be present in the vapor phase of the tank systems at the 242-A Evaporator. However, to prevent the spread of contamination, the vapor-liquid separator (C-A-1) is ventilated and maintained at lower air pressure than the building air space. This ensures air leakage is from uncontaminated building air space into the tank vapor space. Vapors from the vapor-liquid separator flow to the vacuum condenser system described in Section 4.0.

The condensate collection tank (C-100), collects process condensate that is not designated ignitable or reactive.

The tank systems and ancillary equipment are located within the 242-A Building, which is completely enclosed to prevent run-on and infiltration of precipitation into the secondary containment system.

4.1.6.4.2 Ancillary Equipment

The 242-A Building provides secondary containment for ancillary equipment. Double containment is provided for the feed and slurry transfer lines between the 242-A Building and the AW Tank Farm by pipe-in-pipe arrangements. Therefore, all ancillary equipment has secondary containment and the daily inspection requirements in WAC 173-303-640(4)(f) are not applicable.

4.1.7 Variances from Secondary Containment Requirements

The integrity assessment report (Appendix 4B) discusses the following three deficiencies associated with the secondary containment system:

Pump Room Sump. The pump room sump does not comply with secondary containment requirements because liquid must be kept in the sump to provide a seal to prevent airflow between the pump room and feed tank 241-AW-102. Although the sump has a 0.63-centimeter (0.25-inch)-thick stainless steel liner to prevent corrosion of the concrete floor, the sump does not have secondary containment.

Routine Discharges through Secondary Containment. The configuration of the 242-A Evaporator process requires routine, batch discharges of dangerous waste through secondary containment drain lines. These routine discharges include the following.

- Steam condensate, cooling water, and process condensate sample stations drain to the feed tank, 241-AW-102, through drain line DR-343. Total discharge is about 38 liters (10 gallons) per month during operation.
- Sample bottle water sprays down in the feed and slurry sample stations drain to the decontamination sump in the load out and hot equipment storage room. The decontamination sump then drains to the pump room sump. Total discharge is about 76 liters per month during operation.

Transfer Piping Wall Penetrations. Three dangerous waste transfer line piping sections passing through the 242-A Building wall are single-walled, i.e., no secondary confinement in the wall (about 56-centimeter-thick reinforced concrete).

These deficiencies were identified to Ecology, October 28, 1993. Ecology's response stated, "No physical revision of the pipe wall penetrations or the floor drains in the evaporator pump room will be required prior to evaporator restart". The response required the following.

- If at any time leakage is seen or detected from these installations, or if for any reason these installations are repaired or rebuilt, they will be rebuilt or repaired in accordance with regulations.
- Should a spill occur in the evaporator pump room the sump and the piping shall be rinsed three times as required in WAC 173-303-160. 'Appropriate' in this case means that the original regulation was written for a free container, not a sump, so that judgment will have to be used in the application of the regulation. The rinsate shall be transferred to the double-shell tanks.

4.1.8 Tank Management Practices

All waste to be processed at the 242-A Evaporator must be sampled to determine if the waste is compatible with the materials of construction at the 242-A Evaporator. Before each campaign, candidate feed tanks are sampled per the requirements of the waste analysis plan (Chapter 3.0). Based on the results, three possible options are implemented.

- The waste is acceptable for processing without further actions.
- The waste is unacceptable for processing as a single batch, but is acceptable if blended with other waste that is going to be processed.
- The waste is unacceptable for processing.

The 242-A Evaporator process is controlled by the MCS. The MCS computer monitors liquid levels in the vapor-liquid separator (C-A-1) and condensate collection tank (C-100). The MCS system manages liquid levels in the C-A-1 using an auto-cascade function that controls feed delivery to the C-A-1 vessel. The MCS system also manages liquid levels in the C-100 using an auto-cascade function to maintain the tank level at approximately 50-percent. The MCS has alarms that annunciate on high-liquid levels for both C-A-1 and C-100 to notify operators that actions must be taken to prevent overfilling of these vessels.

An interlock is activated when high-liquid level in the vapor-liquid separator (C-A-1) is detected, automatically shutting down the feed transfer pump at feed tank 241-AW-102, thereby preventing overfilling of the vessel and carryover of slurry into the process condensate system. The condensate collection tank (C-100) has an overflow line that routes solution to feed tank 241-AW-102 in case of overfilling.

Process and instrumentation drawings are listed in Section 4.3.

The MCS also provides an automated interlock to shutdown the recirculation pump (P-B-1) and slurry pump (P-B-2) if a leak is detected. The recirculation pump (P-B-1) and slurry pump (P-B-2) will be shutdown automatically using the MCS interlock and/or manually at the direction of the Shift Manager or 242-A Evaporator Control Room Operator if a leak occurs. The process condensate pump (P-C-100) will be shut down manually at the direction of the Shift Manager or 242-A Evaporator Control Room Operator if a leak occurs.

4.1.9 Labels or Signs

A labeling upgrade was completed before restart in 1994 for tank C-100 to identify the waste contents and major risks associated with waste stored within the tank. Tank C-100 ancillary piping is labeled "PROCESS CONDENSATE" to alert trained personnel which pipes in the condenser room contain dangerous waste. The vapor-liquid separator (C-A-1) is located in the evaporator room, a normally unoccupied area. This area is posted as a high radiation area with ALARA access controlled and limited to trained personnel only. The tank labels are visible from the walls of the tank enclosure rooms, which are less than 15 meters from the tank systems; therefore, label visibility requirements are met.

4.1.10 Air Emissions

Tank systems that contain extremely hazardous waste, and is acutely toxic by inhalation must be designed to prevent the escape of such vapors. The DST System waste in the vapor-liquid separator, C-A-1, is designated extremely hazardous waste; however, no determination has been performed to determine if the waste is acutely or chronically toxic. Most of the toxic compounds in the DST waste are not volatile, but because of the high radioactivity of the waste, controls are included to prevent or mitigate the release of tank vapors. The vapor-liquid separator is maintained under vacuum to ensure air leakage is from uncontaminated building air space into the tank vapor space. The boiling vapor in C-A-1 passes through deentrainment pads and sprays to prevent liquid and solid carryover into the vapor section of the tank. The vapor stream passes through three condensers that remove the condensable components. The noncondensable vapors pass through HEPA filters before being discharged to the environment.

4.1.11 Management of Ignitable or Reactive Wastes in Tank Systems

Although the DST System waste reprocessed at the 242-A Evaporator is designated ignitable because of the presence of oxidizers (nitrates and nitrites), the waste does not meet the definition of a combustible or flammable liquid given in National Fire Protection Association (NFPA) code number 30 (NFPA 1996). The buffer zone requirements in NFPA-30, which require tanks containing combustible or flammable solutions be a safe distance from each other and from public way, are not applicable.

An analysis is performed on the DST System waste to be processed to verify the waste does not react exothermically at the elevated temperatures at the 242-A Evaporator. The waste analysis plan (Chapter 3.0) discusses waste acceptance requirements due to reactive waste designation.

4.1.12 Management of Incompatible Wastes in Tank Systems

Waste transferred to the 242-A Evaporator must be compatible before mixing. The waste analysis plan (Chapter 3.0) includes waste compatibility requirements.

4.2 AIR EMISSIONS CONTROL

This section addresses the requirements of Air Emission Standards for Process Vents, under Subpart AA (incorporated by reference in WAC 173-303-690).

4.2.1 Applicability of Subpart AA Standards

The 242-A Evaporator performs distillation that specifically requires evaluation of process vents for the applicability of 40 CFR 264 Subpart AA.

Waste processed at the 242-A Evaporator routinely contains greater than 10 parts per million organic concentrations; therefore, organic air emissions are subject to 40 CFR 264.1032, which requires organic emissions from all affected vents at the Hanford Facility be less than 1.4 kilograms per hour and 2.8 megagrams per year, or control devices be installed to reduce organic emissions by 95%.

The 242-A Evaporator has one process ventilation system that vents both the vapor-liquid separator (C-A-1) and the condensate collection tank (C-100). The vent lines from both tanks combine before entering an off-gas system consisting of a deentrainer, a prefilter/demister, HEPA filters, and an exhaust fan. The vessel vent off-gas system is located on the third floor of the condenser room, with the exhaust stack extending horizontally through the east wall of the building at an elevation of 14.7 meters

above ground level. The exhaust stack bends to run vertically with the discharge point 18.6 meters above ground level.

The annual average flow rate for the vessel vent is given in *Radionuclide Air Emissions Report for the Hanford Site - Calendar* Year *1995* (DOE-RL 1996) as 18 cubic meters per minute and the total annual flow was 9.6 E+06 cubic meters. During waste processing, the airflow is about 20.5 cubic meters per minute, with about 4.3 cubic meters per minute ventilated from tank C-100 and the remainder from the vapor-liquid separator and air in leakage.

Organic emissions occur during waste processing, which is less than 6 months (182 days) each year. This is the maximum annual operating time for the 242-A Evaporator, as shutdowns are required during the year for maintenance outages, candidate feed tank analysis, and establishing transfer routes for staging waste in the DST System. The total operating time for the two campaigns in 1994 was 86 days.

4.2.2 Process Vents - Demonstrating Compliance

This section outlines how the 242-A Evaporator complies with the requirements of 40 CFR 264, Subpart AA, including a discussion of the basis for meeting the organic emission limits, calculations demonstrating compliance, and conditions for reevaluating compliance.

4.2.2.1 Basis for Meeting Limits/Reductions

The TSD units at the Hanford Facility subject to 40 CFR 264, Subpart AA meet the organic air emission limits of 1.4 kilograms per hour and 2.8 megagrams per year, established in 40 CFR 264.1032, by the design of the facility. The 242-A Evaporator and the other TSD units collectively can meet these standards without the use of air pollution control devices.

4.2.2.2 Demonstrating Compliance

Process vent organic air emissions are controlled by establishing limits for acceptance of waste at the 242-A Evaporator. Before startup of each campaign, the waste to be processed is sampled in the DST System to determine the organic content. If the concentrations of organic constituents are less than the limits in the waste analysis plan (Chapter 3.0), the waste can be processed, provided the Hanford Facility will not exceed 1.4 kilograms per hour and 2.8 megagrams per year. The waste acceptance limits in the waste analysis plan are based on equilibrium calculations and assumptions given in *Organic Emission Calculations for the 242-A Evaporator Vessel Vent System* (WHC 1996). The calculation to determine organic emissions consists of the following steps:

1. Determine the emission rate of each candidate feed tank organic constituent by multiplying the constituent concentration by the corresponding partition factor in *Organic Emission Calculations for the 242-A Evaporator Vessel Vent System* (WHC 1996).
2. Sum the emission rates of all organic constituents to determine the emission rate for the candidate feed tank. The maximum emission rate for the campaign is the rate from the candidate tank with the greatest emission rate.
3. Determine the total amount of emission during the campaign by using operating time and a weighted average emission rate, based on the volume of each candidate feed tank processed.

The organic emission rates and quantity of organics emitted during the campaign are determined using these calculations and are included in the operating record for each campaign, as required by 40 CFR 264.1035. The Hanford Facility has a system to ensure organic emissions from units subject to 40 CFR 264, Subpart AA are less than the limits of 1.4 kilograms per hour and 2.8 megagrams per year. Records documenting total organic emissions are available for Ecology review on request.

4.2.2.3 Reevaluating Compliance with Subpart AA Standards

Calculations to determine compliance with Subpart AA will be reviewed when any of the following conditions occur at the 242-A Evaporator:

- Changes in the configuration or operation that affect the assumptions in the Organic Emission Calculations for the 242-A Evaporator Vessel Vent System (WHC 1996)
- Annual operating time exceeds 182 days

4.3 ENGINEERING DRAWINGS

The drawings in Table 4.1 are process and instrumentation diagrams for the systems at the 242-A Evaporator that contact mixed waste. These drawings are provided for general information, and demonstrate adequacy of the tank systems design.

Table 4.1. Process and Instrumentation Diagrams

System	Drawing Number	Drawing Title
Vapor-Liquid Separator	H-2-98988 Sheet 1	P & ID Evaporator Recirc System
Reboiler/Recirculation Line	H-2-98988 Sheet 2	P & ID Evaporator Recirc System
Slurry System	H-2-98989 Sheet 1	P & ID Slurry System
Condensate Collection Tank	H-2-98990 Sheet 1	P & ID Process Condensate System
Secondary Containment Drain System	H-2-98995 Sheet 1	P & ID Drain System
Secondary Containment Drain System	H-2-98995 Sheet 2	P & ID Drain System
Condensers	H-2-98999 Sheet 1	P & ID Vacuum Condenser System
Pump Room Sump	H-2-99002 Sheet 1	P & ID Jet Gang Valve System
Condensate Recycle System	H-2-99003 Sheet 1	P & ID Filtered Raw Water System
Process Condensate Line PC-5000	H-2-79604	Piping Plot for PC-5000 between 242 A and the LERF fence line

The drawings in Table 4.2 are for secondary containment systems for the 242-A Evaporator. Because secondary containment systems are the final barrier for preventing the release of dangerous waste into the environment, modifications that affect the secondary containment systems will be submitted to the Washington State Department of Ecology, as a Class 1, 2, or 3 Permit modifications, as required by WAC 173-303-830.

Table 4.2. 242-A Evaporator Secondary Containment Systems Drawings

System	Drawing Number	Drawing Title
242-A Building	H-2-69277 Sheet 1	Structural Foundation Plan Sections & General Notes - Areas 1 & 2
	H-2-69278 Sheet 1	Structural Foundation Elevations & Details - Areas 1 & 2
	H-2-69279 Sheet 1	Structural First Floor Plan & AMU - Areas 1 & 2
Pump Room Sump Drainage	H-2-69352 Sheet 1	Sections Process Waste Drainage
242-A Building Drainage	H-2-69354 Sheet 1	Plan Process Waste Drainage
Pump Room Sump	H-2-69369 Sheet 1	Pump Room Sump Assembly & Details

Figure 4.1. 242-A Evaporator Simplified Process Flow Diagram

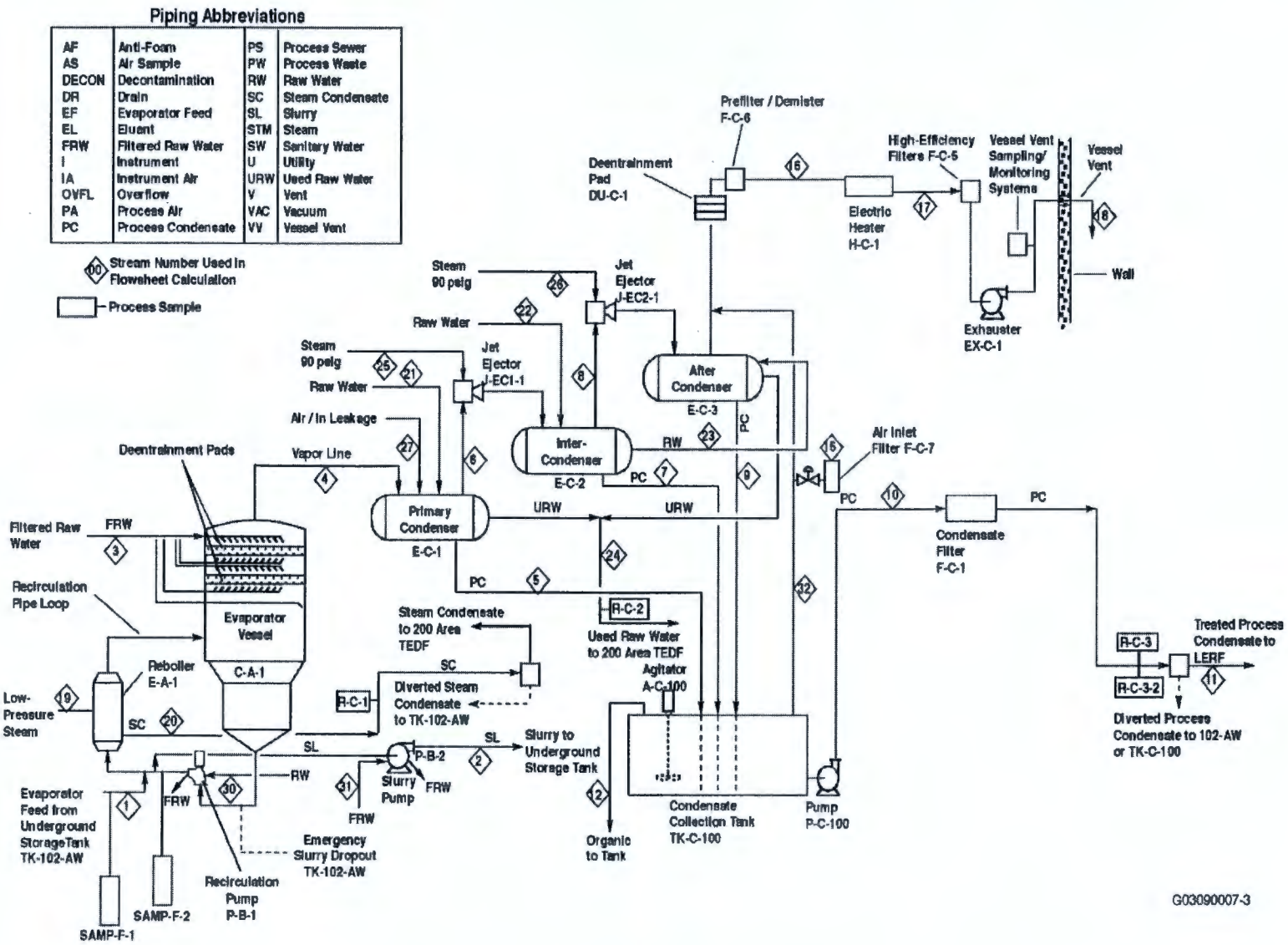

Figure 4.2. 242-A Evaporator Process Loop

AF	Anti-Foam	PS	Process Sewer
AS	Air Sample	PW	Process Waste
DECO	Decontamination	RW	Raw Water
DR	Drain	SC	Steam Condensate
EF	Evaporator Feed	SL	Slurry
EL	Eluent	STM	Steam
FRW	Filtered Raw Water	SW	Sanitary Water
I	Instrument	U	Utility
IA	Instrument Air	CW	Cooling Water
OVFL	Overflow	V	Vent
PA	Process Air	VAC	Vacuum
PC	Process Condensate	VV	Vessel Vent
CR	Condensate Recycle		

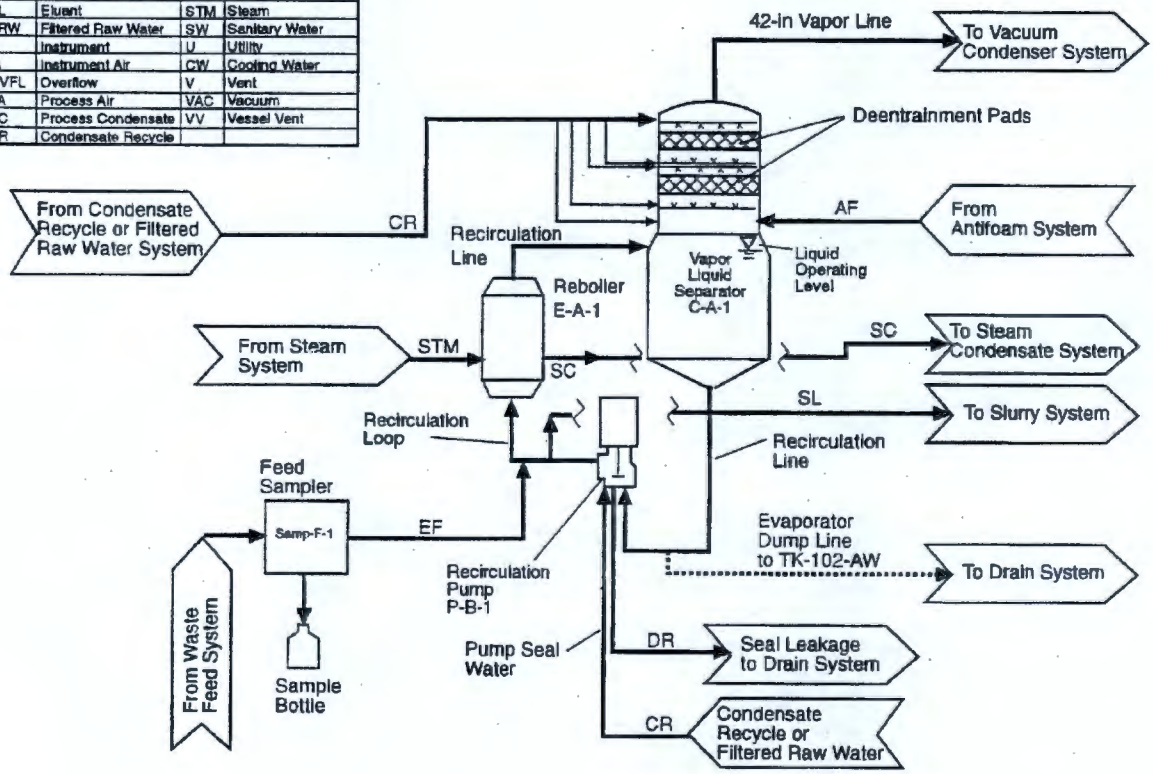

2G96080167.3

Figure 4.3. 242-A Evaporator Slurry System

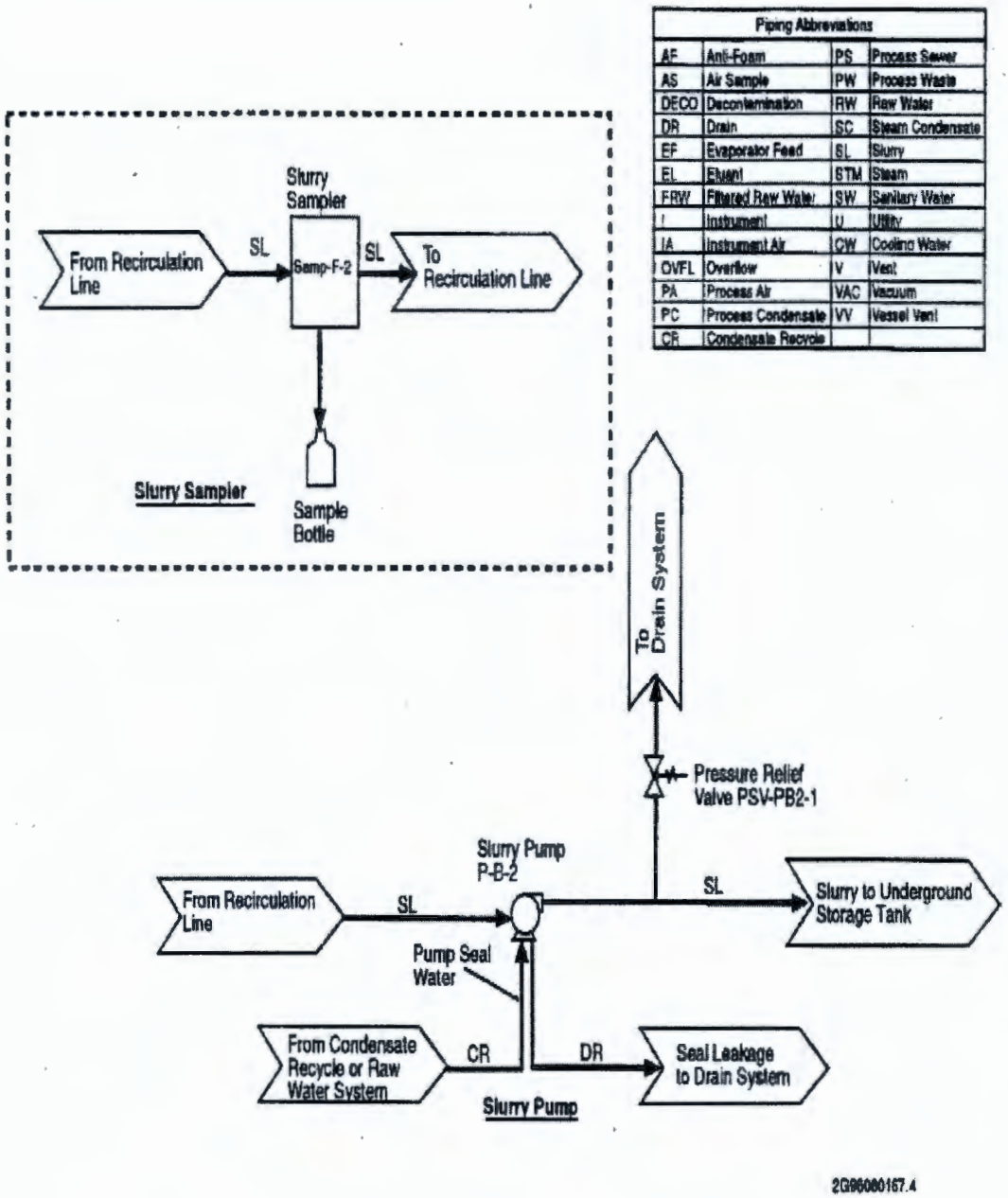

Piping Abbreviations			
AF	Anti-Foam	PS	Process Sewer
AS	Air Sample	PW	Process Waste
DECO	Decontamination	RW	Raw Water
DR	Drain	SC	Steam Condensate
EF	Evaporator Feed	SL	Slurry
EL	Effluent	STM	Steam
FRW	Filtered Raw Water	SW	Sanitary Water
I	Instrument	U	Utility
IA	Instrument Air	CW	Cooling Water
OVFL	Overflow	V	Vent
PA	Process Air	VAC	Vacuum
PC	Process Condensate	VV	Vessel Vent
CR	Condensate Recycle		

Figure 4.4. 242-A Evaporator Process Condensate System

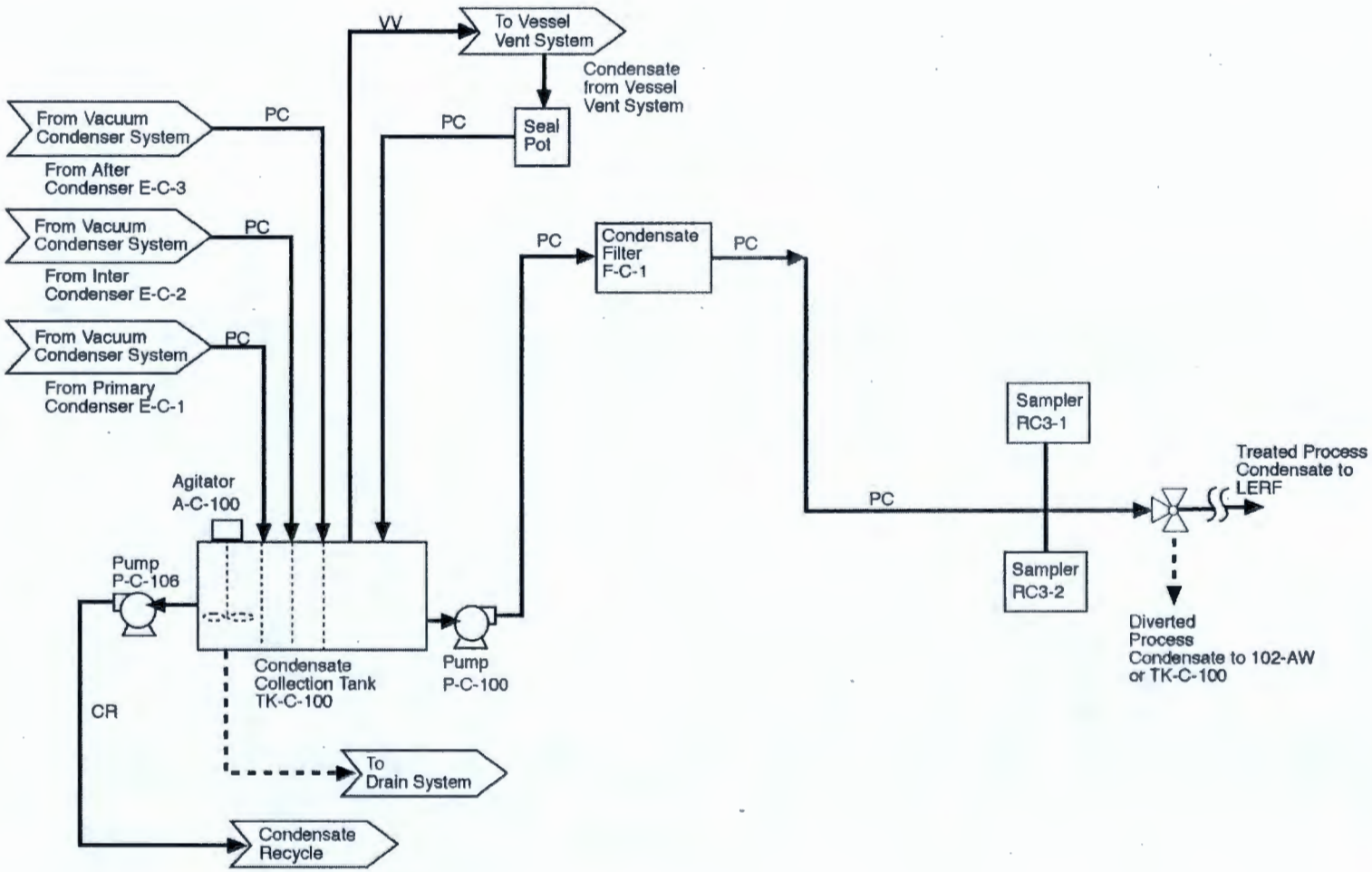

Piping Abbreviations							
AF	Anti-Foam	I	Instrument	PW	Process Waste	CW	Cooling Water
AS	Air Sample	IA	Instrument Air	RW	Raw Water	V	Vent
DECO	Decontamination	OVFL	Overflow	SC	Steam Condensate	VAC	Vacuum
DR	Drain	PA	Process Air	SL	Slurry	VV	Vessel Vent
EF	Evaporator Feed	PC	Process Condensate	STM	Steam		
EL	Eluant	CR	Condensate Recycle	SW	Sanitary Water		
FRW	Filtered Raw Water	PS	Process Sewer	U	Utility		

LERF = Liquid Effluent Retention Facility.

M0312-2.1
12-9-03

Figure 4.5. 242-A Evaporator Vacuum Condenser System

Piping Abbreviations			
AF	Anti-Foam	PS	Process Sewer
AS	Air Sample	PW	Process Waste
DECO	Decontamination	RW	Raw Water
DR	Drain	SC	Steam Condensate
EF	Evaporator Feed	SL	Slurry
EL	Eluant	STM	Steam
FRW	Filtered Raw Water	SW	Sanitary Water
I	Instrument	U	Utility
IA	Instrument Air	CW	Cooling Water
OVFL	Overflow	V	Vent
PA	Process Air	VAC	Vacuum
PC	Process Condensate	VV	Vessel Vent
CR	Condensate Recycle		

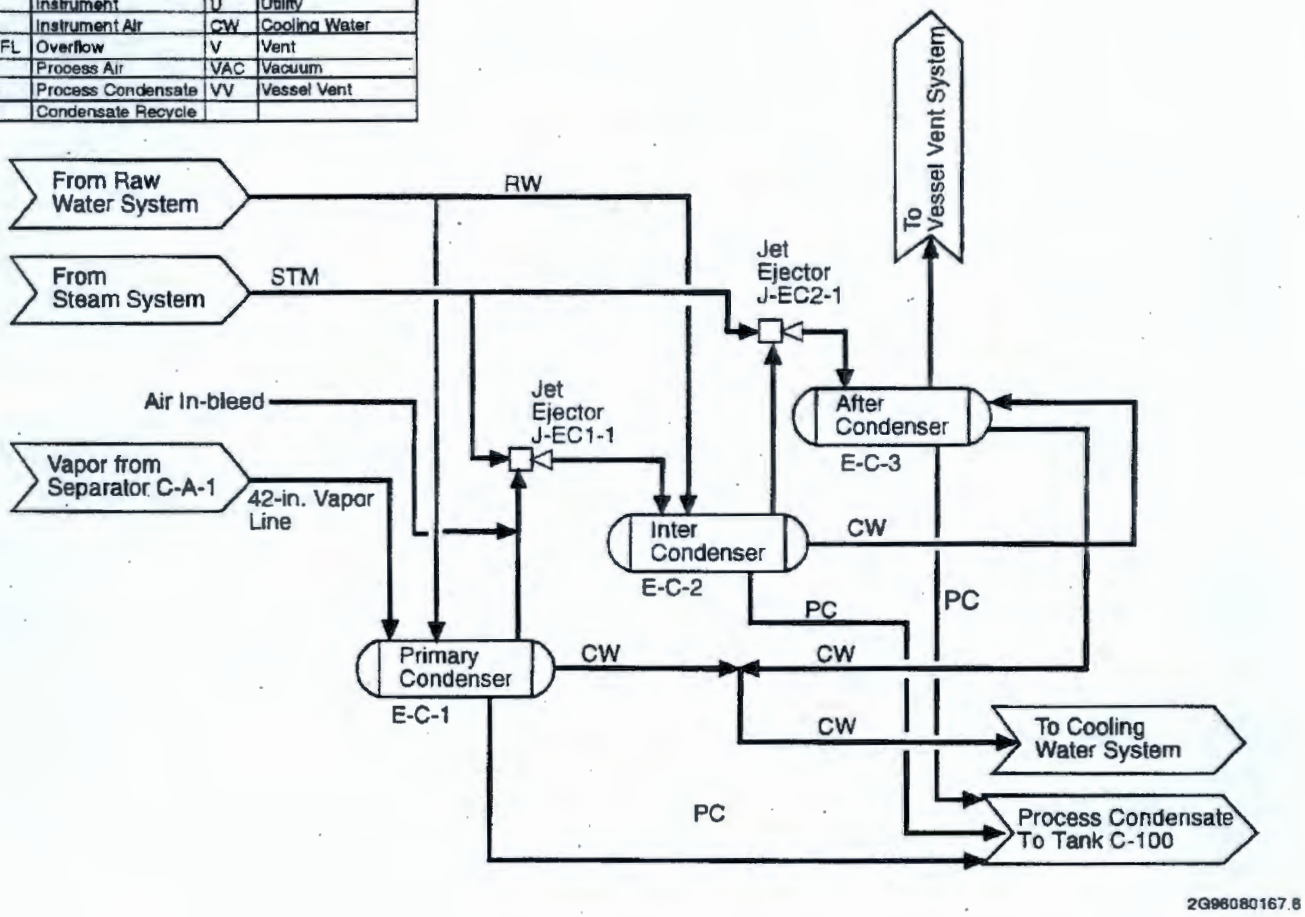

Figure 4.6. 242-A Evaporator Drain System

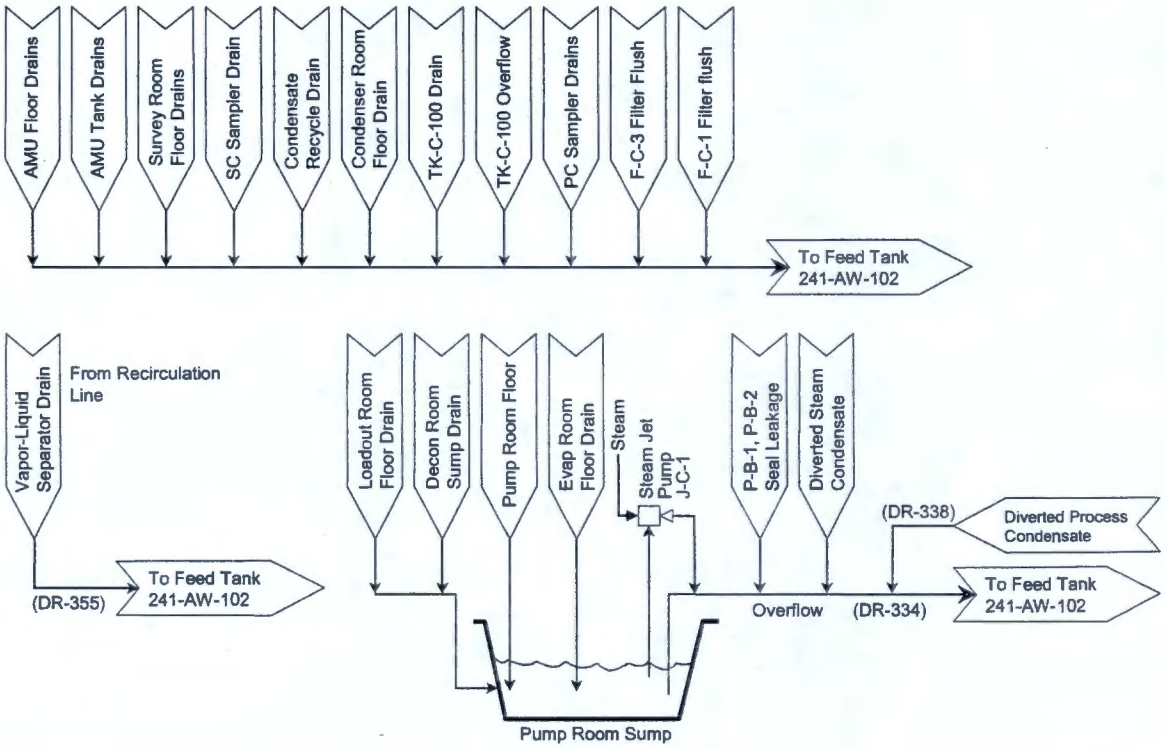

CHG0508-15

Chapter 6.0 Procedures to Prevent Hazards

6.0 PROCEDURES TO PREVENT HAZARDS 6.1

6.1 SECURITY 6.1
6.1.1 Waiver 6.1

6.2 INSPECTION PLAN 6.1
6.2.1 General Inspection Requirements 6.1
6.2.2 Tank System Inspections and Corrective Actions 6.2
6.2.3 Storage of Reactive and Ignitable Wastes 6.3
6.2.4 Air Emissions Control and Detection Inspections 6.4
6.2.5 Inspection Logs 6.4
6.2.6 Schedule for Remedial Action for Problems Revealed 6.4

6.3 PREPAREDNESS AND PREVENTION REQUIREMENTS 6.4
6.3.1 Equipment Requirements 6.4
6.3.2 Internal Communications 6.5
6.3.3 Spacing Requirement 6.6

6.4 PREVENTIVE PROCEDURES, STRUCTURES, AND EQUIPMENT 6.6
6.4.1 Loading and Unloading Operations 6.6
6.4.2 Runoff 6.6
6.4.3 Water Supplies 6.6
6.4.4 Equipment and Power Failures 6.7
6.4.5 Personnel Exposure 6.7

6.5 PREVENTION OF REACTION OF IGNITABLE, REACTIVE, AND INCOMPATIBLE WASTE 6.8
6.5.1 Precautions to Prevent Ignition or Reaction of Ignitable or Reactive Waste 6.8
6.5.2 Precautions for Handling Ignitable or Reactive Waste and Mixing of Incompatible Waste 6.8

Tables

Table 6.1. Visual Inspection Schedule for Tanks, Piping, and Rooms 6.9
Table 6.2. Inspection Schedule of Safety, Security, and Emergency Equipment 6.10
Table 6.3. Inspection Schedule for Alarm Monitoring 6.11
Table 6.4. Inspection Schedule for Maintenance and Other Inspections 6.12

This page intentionally left blank.

6.0 PROCEDURES TO PREVENT HAZARDS

This chapter discusses security, inspection schedules, preparedness and prevention requirements, preventive procedures, structures, and equipment, and prevention of reaction of ignitable, reactive, and incompatible waste for the 242-A Evaporator.

Where information regarding treatment, management, and disposal of the radioactive source, byproduct material, special nuclear material (as defined by the Atomic Energy Act of 1954, as amended) and/or the radionuclide component of mixed waste has been incorporated into this permit, it is not incorporated for the purpose of regulating the radiation hazards of such components under the authority of this permit or chapter 70.105 RCW.

6.1 SECURITY

Refer to Permit Attachment 33, §6.1 Security.

6.1.1 Waiver

A waiver of security procedures and equipment requirements is not requested for the 242-A Evaporator. Therefore, the waiver requirements outlined in WAC 173-303-310(1)(a) and (b) are not applicable.

6.2 INSPECTION PLAN

This section describes the method and schedule for inspections of the 242-A Evaporator. The purpose of inspections is to identify situations that might cause or lead to a release of mixed waste that could pose a threat to human health and the environment. Abnormal conditions identified by an inspection must be corrected on a schedule that prevents hazards to the public and environment.

6.2.1 General Inspection Requirements

This section provides an overview of inspections performed at the 242-A Evaporator. A copy of the inspection plan is kept in the 242-A Evaporator control room. There are three general classes of inspections at the 242-A Evaporator:

- Monitoring of remote instrumentations and alarms are performed by operating personnel in the 242-A Evaporator control room using the MCS computer.
- Visual inspections of tanks and equipment are performed by operating personnel. Other inspections of 242-A Evaporator equipment are performed as noted in Table 6.1 through Table 6.4.
- Preventive maintenance of equipment and calibration of instruments are performed by maintenance personnel. A computerized tracking system is used to identify and schedule preventive maintenance and calibration activities.

Preventive maintenance and instrument calibrations on certain equipment might not be possible when the 242-A Evaporator is operating. Because of the limited duration of 242-A Evaporator campaigns, these activities are scheduled during outages between campaigns to avoid interference with operating activities. Per Condition II.O.3 inspection of high radiation areas will be addressed on a case-by-case basis.

6.2.1.1 Types of Problems

The 242-A Evaporator inspections include, but are not limited to, the following:

- Condition of tanks and ancillary equipment
- Condition of secondary containment
- Evidence of leaks or overflows from tanks, piping, or transfer lines

- Condition of security equipment
- Condition of safety, communications, and emergency equipment.

A schedule of inspections, including items to be inspected, problems to look for, frequency of inspections and responsible organization are provided in Tables 6.1 through 6.4.

6.2.1.2 Frequency of Inspections

The frequency of inspections is based on the significance of a failure of the equipment and on regulatory requirements, Hanford Site and industry standards, and experience of the nature and frequency of equipment failures.

- The frequency of inspections for the 242-A Evaporator is given in Tables 6.1 through 6.4. Examples of frequencies include:
- Daily (at least every 24 hours) - visual inspections of tanks, piping and secondary containment.
- Weekly (at least every 7 days) - visual inspections of personal protective equipment, exterior lighting, and posted warning signs.
- Monthly (at least every 31 days) - inspections of emergency sirens, fire extinguishers, safety showers, emergency lighting and the spill control kit.
- Annually (at least every 365 days) - instrumentation calibrations, cathodic protection system testing, fire inspections.

Leak detectors are functionally checked within 92 days of the start of a campaign and every 92 days thereafter until the campaign is over. The frequency of some alarm monitoring is continuous. This means an operator must be present in the control room to monitor alarm instruments that continuously check for conditions such as leaks and high sump levels. Continuous monitoring is only required when the 242-A Evaporator is processing waste

6.2.2 Tank System Inspections and Corrective Actions

This section discusses the inspections performed on the two tank systems at the 242-A Evaporator: the vapor liquid separator, C-A-1, and the condensate collection tank, C-100. Inspections include secondary containment and leak and overfill prevention equipment.

6.2.2.1 Overfill Prevention

The vapor liquid separator, C-A-1, is equipped with instrumentation that alarms before the tank reaches a level where the tank could overflow or entrain liquid waste into the vacuum condenser system. The alarm annunciates in the control room allowing operating personnel to take immediate action to stop the vapor liquid separator from overfilling.

The condensate tank, C-100, was designed with an overflow line that routes waste to the feed tank, 241-AW-102. This design prevents tank overflow to the condenser room.

6.2.2.2 Visual Inspections

Visual inspections of tanks and secondary containments are performed to check for leaks, signs of corrosion or damage, and malfunctioning equipment. The following rooms containing dangerous waste are inspected:

- Condenser room
- Pump room
- Hot equipment storage room

In addition, the AMU and load out rooms are inspected when dangerous waste is present in the room.

The vapor liquid separator is located in the evaporator room, with a portion of the recirculation loop located in the pump room. Because of the high radiation dose in the evaporator room, visual inspections cannot be performed. Leaks in the evaporator room drain to the pump room sump; monitoring of the pump room sump instrumentation is performed to determine if leaks have occurred. Visual inspection of the pump room, hot equipment storage room, and load out room is performed through the shielding window on the AMU mezzanine to constrain personnel radiological exposure to levels that are as low as reasonably achievable (ALARA).

6.2.2.3 Leak Detectors

The sample enclosures in the load out and hot equipment storage room have leak detectors for both the feed and slurry samplers. For information on these systems and their secondary containment, refer to Chapter 4.0, §4.1.4.

During sampling or maintenance activities associated with the evaporator room, pump room, hot equipment storage room, or load out room, a radiological contamination control curtain may be extended over the load out room to reduce the likelihood of contaminants reaching the environment through the load out door. When extended, the contamination control curtain will limit visibility to the load out room from the shielding window on the AMU mezzanine while completing inspections. When this is the case, inspection forms will denote that the containment curtain was extended. Leaks in the evaporator room, pump room, hot equipment storage room, and load out room drain to the pump room sump. The sump high-level alarm serves as a leak detector for these rooms. For information on the rooms and their drain systems, refer to Chapter 4.0, §4.1.4.

There are conductivity probe leak detectors installed in the secondary containment of the feed transfer line, slurry line, and drain lines connecting the 242-A Evaporator to AW Tank Farm. However, these detectors are considered part of the DST System.

The PC-5000 transfer line may be continuously monitored during transfers by an electronic leak detection system (Chapter 4.0) or visually inspected at the encasement catch tank (TK-PC-101) in the LERF catch basin (242AL-43). The leak detection system alarms are monitored in the 242-A Evaporator Control Room on the Monitoring and Control System (§4.1.6.3.3). When necessary, visual inspections of the PC-5000 transfer line encasement are administratively controlled by the Shift Manager and occur at a minimum once every 24 hours during waste water transfers through the PC-5000 transfer line to ensure compliance with WAC 173-303-640(4)(c)(iii). Visual inspection for leaks from the PC-5000 transfer line are performed by 242-A Evaporator Operations, by looking for signs of any liquid not attributed to rain/precipitation at the encasement catch tank (TK-PC-101). If any liquid is observed the Shift Manager is notified to take corrective actions.

6.2.2.4 Cathodic Protection

Cathodic protection is not required for the equipment within the 242-A facility boundaries. The only portion of the system, which is underground, is the PC-5000 transfer line. The PC-5000 line is constructed of fiberglass.

6.2.2.5 Tank Assessments

The IAR was issued in 1998. The frequency and nature of these assessments are discussed in the IAR.

6.2.3 Storage of Reactive and Ignitable Wastes

A Fire Protection Engineer performs annual fire inspections of the 242-A Evaporator. The assessment includes the date and time of the inspection, the name of the professional inspector, a notation of the observations made, and any remedial actions which were taken as a result of the inspection. The completed fire protection facility assessment is included in the operating record.

6.2.4 Air Emissions Control and Detection Inspections

The process vent at the 242-A Evaporator is subject to 40 CFR 264, Subpart AA, which requires organic emissions be limited to 1.4 kilograms per hour, and 2.8 mega grams per year, or controls be installed to reduce organic emissions by 95 percent. Organic concentrations in the waste processed at the 242-A Evaporator are limited to ensure the values of 1.4 kilograms per hour and 2.8 mega grams per year are not exceeded. Therefore, no emission control devices are installed on the 242-A Evaporator vessel ventilation system and no inspections are required (Chapter 4.0, §4.2).

6.2.5 Inspection Logs

Visual inspections (refer to Tables 6.1-6.4) are performed using inspection log sheets (also called round sheets) that outline frequency, the components to inspect, operating conditions and ranges, and types of problems. Log sheets are kept in the 242-A Evaporator control room. Inspectors record the following information:

- Date and time of the visual inspection
- Printed name and signature of the person performing the inspection
- Notations of the observations made, including space for writing comments
- An account of spills or discharges in accordance with WAC 173-303-145.

Completed log sheets are reviewed and approved by the shift supervisor, collected, and stored for at least 5 years.

Maintenance inspections are performed as part of the maintenance job control system. After completion, the maintenance documentation is reviewed and signed.

6.2.6 Schedule for Remedial Action for Problems Revealed

If while performing a visual inspection (Table 6.1), a leak or spill is discovered, facility management responds immediately per Chapter 7.0, Contingency Plan. Action is taken to stop the leak and determine the cause. The waste is removed from the secondary containment within 24 hours or in a timely manner that prevents harm to human health and the environment. For spills that drain to the pump room sump, the sump must be jetted. The sump will be triple rinsed in accordance with WAC 173-303-160(2)(b) if the contents include acutely hazardous waste (WAC-173-303-040) or toxic extremely hazardous waste (WAC-173-303-100). Pesticides are not expected to enter this system (Chapter 4.0, §4.1.5).

If an alarm activates during inspections, an operator responds immediately and implements appropriate actions.

If an inspection identifies equipment that is missing, damaged, or not operating properly, the operator records the problem on a deficiency log in the 242-A Evaporator control room. Repair work is prioritized by facility management to mitigate health and environmental risks.

6.3 PREPAREDNESS AND PREVENTION REQUIREMENTS

The following sections document the preparedness and prevention measures taken at the 242-A Evaporator.

6.3.1 Equipment Requirements

The following sections describe the internal and external communications and emergency equipment located at the 242-A Evaporator that can be activated by the 242-A Evaporator BED. Hanford Facility-wide equipment is identified in Permit Attachment 4, *Hanford Emergency Management Plan* (DOE/RL-94-02).

6.3.2 Internal Communications

The 242-A Evaporator is equipped with internal communication systems to provide immediate emergency instruction to facility personnel. The onsite communication systems at the 242-A Evaporator include telephones, hand-held two-way radios, a public address system, and alarm systems. The telephone and radio systems provide for internal and external communication. Alarm systems allow facility personnel to appropriately respond to various emergencies, including building evacuations, take cover events, fires and/or explosions. The locations of telephones, public address systems, and alarms are given in the Chapter 7.0, Contingency Plan.

Immediate emergency instruction to personnel is provided by a public address system using speaker horns and speakers located throughout the 242-A and 242-AB Buildings and outside.

6.3.2.1 External Communications

The 242-A Evaporator is equipped with devices for summoning emergency assistance from the Hanford Fire Department, the Hazardous Materials Response Team, and/or Hanford Patrol, as necessary. External communication to summon emergency assistance is made by using a telephone communication system, fire alarm pull boxes, or hand-held radio as described in Permit Attachment 4, *Hanford Emergency Management Plan*, (DOE/RL-94-02). These devices are provided throughout the 242-A Evaporator.

During certain periods, only one operator may be available within the 200 East plateau. This operator has access to external communication using telephones located throughout the building.

6.3.2.2 Emergency Equipment

Emergency equipment is available throughout the 242-A Building. The locations of telephones, public address systems, and alarms are given in Chapter 7.0, Contingency Plan.

Major fire damage is unlikely at the 242-A Evaporator because of the concrete construction and because the amount of combustible material is minimized. Temperature activated water sprinkler systems, emergency lights, fire alarms pull boxes, and fire extinguishers are located throughout the facility. The 242-A Evaporator relies primarily on the Hanford Fire Department to respond to fires and other emergencies as described in Permit Attachment 4, *Hanford Emergency Management Plan*, (DOE/RL-94-02). The Hanford Fire Department is capable of providing rapid response to fires within the 200 East Area.

Safety showers are located in the areas where personnel are most likely to have direct exposure of hazardous materials: in the AMU room and on the first and fourth floors of the condenser room. Water for these devices is supplied from the sanitary water system.

Respirators are located in the PPE storage room near the entryway to the condenser room. Other PPE, such as hazardous material protective gear and special work procedure clothing, are located in cabinets in the survey area. If required, PPE is donned before entry into the rooms containing mixed waste. The level of personal protective equipment required depends on the level of contamination in the area being entered and the activity being performed.

A spill control kit is located in a cabinet near the door to the PPE storage room. An inventory of the equipment in the spill kit is included inside the cabinet. The spill kit cabinet door seal is checked monthly to ensure the kit has not been used. The kit inventory is inspected annually.

The 242-A Evaporator operating personnel are trained in the use of emergency equipment (Chapter 8.0).

6.3.2.3 Water for Fire Control

Water for fire protection is supplied from the 200 East Area raw water system. Columbia River water is supplied to the fire control system from the 282-E Water Supply Reservoir. The water distribution system is sized to provide adequate volume and pressure to supply fire fighting needs under normal and emergency conditions. A fire hydrant is located in the immediate proximity of the 242-A Building.

In the event that the sprinkler system at the 242-A Evaporator does not put out a fire, or the sprinkler system is damaged during an accident, the Hanford Fire Department fire station will provide equipment as described in Permit Attachment 4, *Hanford Emergency Management Plan (DOE/RL-94-02)*.

6.3.3 Spacing Requirement

Sufficient space is maintained on the exterior of the 242-A Evaporator to allow access of personnel and equipment responding to fires, spills, or other emergencies. Unobstructed fire lanes run from Fourth Street and Canton Avenue to the 242-A Building main entrance to allow emergency vehicle access to the main entrance and the nearby fire hydrant.

The 242-A Building interior space is designed to allow access by emergency response personnel while maintaining barriers to contain releases of gaseous or liquid waste and hazardous material. Exit (egress) paths in the rooms containing dangerous waste are checked daily to ensure the walkways have not been obstructed.

6.4 PREVENTIVE PROCEDURES, STRUCTURES, AND EQUIPMENT

The following sections describe preventive procedures, structures, and equipment.

6.4.1 Loading and Unloading Operations

The feed transfer and slurry lines between the 242-A Evaporator and AW Tank Farm are constructed of carbon steel piping with secondary containment and leak detection in a pipe-within-a-pipe arrangement. Although the regulations exempt systems that serve as secondary containment from requiring secondary containment, two of the drain lines from the 242-A Evaporator to AW Tank Farm also have outer encasement piping and leak detection (refer to Chapter 4.0, §4.1.4, for information on these lines).

Waste transfers within the 242-A Building are contained by the secondary containment walls, floors and drains (refer to Chapter 4.0, §4.1.4, for information on secondary containment at the 242-A Evaporator).

Mixed waste storage containers are not loaded or unloaded at the 242-A Evaporator. Unloading operations occur when equipment contaminated with mixed waste exits the facility. Such materials are fully sealed in plastic with absorbent material to absorb any free liquid present. Because of these requirements, the likelihood of a spill outside the 242-A Building during this operation is extremely low.

6.4.2 Runoff

Liquid waste handling at the 242-A Evaporator occurs within tank systems with secondary containment. Rooms containing mixed waste have drains that route to either the pump room sump or the feed tank, 241-AW-102. The pump room sump overflows to the feed tank as well. Therefore, run-off from a major leak, such as a break in a large water line within the 242-A Building, would be contained within the facility or drained to the feed tank (refer to Chapter 4.0, §4.1.4 for information on secondary containment and drain systems).

6.4.3 Water Supplies

Raw and sanitary Columbia River water are supplied to the 242-A Evaporator via separate underground lines from the 282-E Water Supply Reservoir. Raw water is filtered to prevent organisms and other debris from clogging valves, fire hydrants, and other equipment. Sanitary water is filtered and treated before distribution through a piping system separate from the raw water system.

The raw water supply to the 242-A Evaporator enters the 242-A-81 Water Service Building, passing through a strainer and backflow preventer before entering the facility. The backflow preventer ensures

contaminated water cannot flow back into the raw water system. A second backflow preventer is installed in the 242-A Building on the raw water supply line connecting with the condensate recycle line. This system allows either raw water or process condensate to be used for the pump seal water and deentrainment pad spray water without risk of contamination of the raw water system.

The sanitary water system provides water to the lunchroom, drinking fountains, men's and women's change rooms, safety showers, and supply ventilation system air washers. There are no connections between sanitary water and any system or piping containing mixed waste.

6.4.4 Equipment and Power Failures

Backup power is provided by a diesel generator. The diesel motor starts automatically on loss of electrical power and has sufficient fuel to operate the generator, if needed, to safely shut down the evaporator process. An uninterruptible power supply system also is provided to allow continued operation of the MCS computer to ensure uninterrupted monitoring until the backup generator is fully on line.

The 242-A Evaporator is designed to mitigate the effects of failure of a major piece of equipment. In general, the evaporator process can be shut down and the vapor liquid separator gravity drained to the feed tank, 241-AW-102, in the event of equipment failure. The process condensate tank, TK-C-100, is designed to overflow to feed tank 241-AW-102. This mitigates failure of the process condensate pump used to transfer the process condensate to LERF.

Response to equipment and power failures are discussed in more detail in Chapter 7.0, Contingency Plan.

6.4.5 Personnel Exposure

Facility design, administrative controls, and personal protective equipment are used at the 242-A Evaporator to prevent undue exposure of personnel to mixed waste and other hazardous materials.

The following features were incorporated into the 242-A Evaporator design to minimize personnel exposure.

- The facility is designed for remote operation of equipment containing highly radioactive solutions such as waste feed and slurry. These solutions usually are present only in the pump room and evaporator room, which are heavily shielded and routinely are not entered by operating personnel.
- The 242-A Building ventilation system is designed to provide air flow from uncontaminated zones to progressively more contaminated zones.
- Emergency lighting devices are located strategically throughout the 242-A Building.
- Eyewash stations and safety showers are located in rooms containing mixed waste or other hazardous materials that personnel routinely enter. For location of these, refer to Chapter 7.0, Contingency Plan.
- Continuous air monitors with audio and/or visual alarms to notify personnel of airborne radioactive contamination are provided in rooms that contain mixed waste and that routinely are entered.
- Methods for decontaminating vessels and equipment are available to reduce personnel exposure if entry for maintenance activity is required.
- Offices, control room, change rooms, and lunchroom are situated to minimize casual exposure of personnel.

All operations are conducted so employee exposure to mixed waste and other hazardous materials are maintained ALARA. Exposures are minimized by engineering or administrative controls with protective gear used where such controls are not practical. Before the start of any operation that might expose personnel to the risk of injury or contamination, a review of the operation is performed to ensure the

nature of hazards that might be encountered are considered and that appropriate protective gear is selected. Administrative procedures dictate the level of protective clothing worn and depend on the location within the 242-A Building and the nature of the activity being performed. Personnel are trained to wear personal protective equipment in accordance with approved work procedures.

6.5 PREVENTION OF REACTION OF IGNITABLE, REACTIVE, AND INCOMPATIBLE WASTE

The following sections describe prevention of reaction of ignitable, reactive, and incompatible waste.

6.5.1 Precautions to Prevent Ignition or Reaction of Ignitable or Reactive Waste

Administrative procedures are designed to prevent the ignition or reaction of waste at the 242-A Evaporator. The precautions include the following.

- Analysis is performed on candidate waste in the DST System to check that there are no exothermic reactions when the waste is heated and that there will be no adverse affects due to mixing the contents of different waste tanks in the feed tank and evaporator vessel (refer to Chapter 3.0, for details on waste analysis).
- Sample analysis of the candidate waste in the DST System includes a surface sample to identify the presence of a separable organic phase that might be ignitable. If a separate organic phase is detected, the waste solution level in the feed tank is maintained above 2.54 meters to prevent transfer of the organic phase to the 242-A Evaporator.
- The condensate tank, C-100, is equipped with instrumentation to detect the presence of a separable organic phase. If a separate organic phase is detected, the tank is allowed to overflow, transferring the organic phase to the feed tank, 241-AW-102.
- The condensate tank, C-100 is overflowed to the DST System during each campaign to prevent the possibility of accumulating immiscible organics in the condensate waste tank.
- The vapor liquid separator and the condensate tank are drained and flushed before any welding is performed.
- Administrative safety controls have been established to control the use and quantities of combustibles materials, fuels, and gases. Hot work activities such as cutting, welding, and brazing are administratively controlled as part of the industrial safety program.

6.5.2 Precautions for Handling Ignitable or Reactive Waste and Mixing of Incompatible Waste

Waste received at the 242-A Evaporator is protected from materials or conditions that might cause the waste to ignite or react. Much of the waste handling is done remotely to reduce the risk to operating personnel. For precautions taken to prevent the ignition or reaction of waste, refer to Section 6.5.1.

The constituents in the waste received at the 242-A Evaporator that are ignitable or reactive are not very volatile. Therefore, the evaporation process renders the waste that is evaporated (i.e., the process condensate) neither ignitable nor reactive.

1 **Table 6.1. Visual Inspection Schedule for Tanks, Piping, and Rooms**

Item	Inspection	Frequency[1]
	Tank and Piping Inspection	
Condensate tank and piping	• Inspect piping for leaks or corrosion	Daily
	Room Inspections	
AMU room	• Inspect piping for leaks or corrosion • Inspect floor for spills or damage • Inspect for equipment malfunctions • Inspect for housekeeping	Daily[2]
Pump room	• Inspect piping for leaks or corrosion • Inspect floor for spills or damage • Inspect for equipment malfunctions • Inspect for housekeeping • Monitor pump room sump for overflow	Daily[3]
Hot equipment storage room	• Inspect piping for leaks or corrosion • Monitor pump room sump and inspect floor for spills or damage • Inspect for housekeeping	Daily[3]
Load out / Loading room	• Inspect for housekeeping • Monitor drains	Daily[2,3,4]
Condenser room	• Inspect tanks and piping for leaks or corrosion • Inspect floors for spills or damage • Inspect for equipment malfunctions • Inspect for housekeeping	Daily
IX column [5] room	• Inspect piping for leaks or corrosion • Inspect floor for spills or damage	Daily[6]

2

[1] Continuously: an operator must be present in the control room to respond to alarms when processing waste
Daily: at least every 24 hours
2 When dangerous waste is present
3 Use viewing window in AMU room to perform inspection
[4] Denote use of contamination control curtain when extended
[5] IX column was removed in 2003. The remaining piping has been drained and isolated.
[6] Surveillance is only required if the piping is returned to service and dangerous waste is reintroduced to the piping

1 **Table 6.2. Inspection Schedule of Safety, Security, and Emergency Equipment**

Item	Inspection	Frequency [1]
Security		
Building external doors	Verify external doors are closed and locked[2]	Daily
Posted warning signs	Verify signs are present, legible, and visible at 7.6 meters	Weekly
Communications		
Radios	Verify radios are operable and batteries are charged	Monthly
Telephones	Verify telephones are operable	Quarterly
Intercom/public address system	Verify systems are working properly	Quarterly
Emergency Equipment		
Safety showers/ eyewash station	Verify operability	Monthly
Emergency lighting	Verify operability	Monthly
Fire extinguishers	Verify fire extinguishers are in their proper location	Monthly
Spill response kit	Verify spill kit is present	Monthly
Personal protective clothing	Verify availability	Weekly
Respirators	Verify availability and shelf life	Monthly

2

[1] Continuously: an operator must be present in the control room to respond to alarms
Daily: at least every 24 hours
Weekly: at least every 7 days
Monthly: at least every 31 days
Quarterly: at least every 124 days
Annually: at least every 365 days

[2] Entrances to office areas are allowed to be unlocked

1 **Table 6.3. Inspection Schedule for Alarm Monitoring**

Item	Inspection	Frequency[1]
	Overfill Protection	
Vapor liquid separator: WFSH-CA11 WFSH-CA12	Monitor for vapor liquid separator high level. Surveillance required only when solution is in the vapor liquid separator.	Continuously
	Leak Detection	
Sampler lines: LDS-SMPL1 LDS-SMPL2	Monitor feed and slurry sampler lines for leaks. Surveillance required only during feed or slurry sampling.	Continuously
Pump room sump: WFI-SUMP1	Monitor for leaks in the evaporator room, pump room, load out and hot equipment storage room and loading room. These rooms drain to the pump room sump. Surveillance required only when waste solution is present in the rooms listed.	Continuously

[1] Continuously: an operator must be present in the control room to respond to alarms.

Table 6.4. Inspection Schedule for Maintenance and Other Inspections

Item	Inspection	Frequency[1]
Instrumentation Functional Checks and Calibrations		
Leak detectors	Perform leak detector functional checks.	Within 92 days of campaign startup and every 92 days thereafter until the campaign is over
Vapor liquid separator high level alarms: WFSH-CA11 WFSH-CA12	Perform calibrations of loop instruments.	Annually
Pump room sump level: WFI-SUMP1	Perform calibrations of loop instruments.	Annually
Backup Electrical Equipment		
Diesel generator	Verify operability.	Monthly
Uninterruptible power supply	Verify output voltage and inspect battery for signs of damage or tampering.	Annually
Fire Systems		
Fire suppressant and notification systems (i.e., sprinkler system and fire alarm pull boxes)	Water flow alarm tests of the sprinkler system to ensure the operation of a single sprinkler head will transmit an alarm, and that any of the manual fire alarm boxes will properly transmit an alarm signal.	Annually
Visual inspection of the physical condition of the sprinkler system, testing, and calibration of smoke detectors, and testing of heat detectors	A visual inspection of the sprinkler system to ensure system integrity as well as the required testing and calibration of detectors to ensure functionality. A flow test at the sprinkler system is performed to ensure proper flow to the system riser.	Biennial
Fire inspection	Inspect areas where ignitable or reactive wastes are stored per WAC 173-303-395(d).	Annually

[1] Continuously: an operator must be present in the control room to respond to alarms.
Monthly: at least every 31 days
Annually: at least every 365 days
Biennial every 730 days

Chapter 8.0 Personnel Training

8.0 PERSONNEL TRAINING 8.1

8.1. OUTLINE OF INTRODUCTORY AND CONTINUING TRAINING PROGRAMS 8.1

8.1.1 Introductory Training 8.1

8.1.2 Continuing Training 8.2

8.2 DESCRIPTION OF TRAINING DESIGN 8.2

8.3 DESCRIPTION OF TRAINING PLAN 8.3

Table

Table 8.1. 242-A Evaporator Training Matrix 8.4

This page intentionally left blank.

8.0 PERSONNEL TRAINING

This chapter discusses personnel training requirements based on WAC 173-303 and the Hanford Facility RCRA Permit, WA7 89000 8967 (Permit). In accordance with WAC 173-303-806(4)(a)(xii), the Hanford Facility Dangerous Waste Part B permit application must contain two items: (1) an outline of both the introductory and continuing training programs by owners or operators to prepare persons to operate or maintain the TSD facility in a safe manner as required to demonstrate compliance with WAC 173-303-330, and (2) a brief description of how training will be designed to meet actual job tasks in accordance with the requirements in WAC 173-303-330(1)(d). Permit Condition II.C, Personnel Training contains training requirements applicable to Hanford Facility personnel and non-Facility personnel.

Compliance with these requirements at 242-A Evaporator is contained in Permit Attachment 33, Chapter 8.0 and this chapter. This chapter supplements Permit Attachment 33, Chapter 8.0.

8.1. OUTLINE OF INTRODUCTORY AND CONTINUING TRAINING PROGRAMS

The introductory and continuing training programs are designed to prepare personnel to manage and maintain the TSD unit in a safe, effective, and environmentally sound manner. In addition to preparing personnel to manage and maintain TSD units under normal conditions, the training programs ensure that personnel are prepared to respond in a prompt and effective manner should abnormal or emergency conditions occur. Emergency response training is consistent with the description of actions contained in, Chapter 7.0, Contingency Plan. The introductory and continuing training programs contain the following objectives:

- Teach Hanford Facility personnel to perform their duties in a way that ensures the Hanford Facility's compliance with WAC 173-303
- Teach Hanford Facility personnel dangerous waste management procedures (including implementation of the contingency plan) relevant to the job titles/positions in which they are employed, and
- Ensure Hanford Facility personnel can respond effectively to emergencies.

8.1.1 Introductory Training

Introductory training includes general Hanford Facility training and TSD unit-specific training. General Hanford Facility training is described in Attachment 33, Chapter 8.0, Section 8.1, and is provided in accordance with the Permit Condition II.C.2. TSD unit-specific training is provided to Hanford Facility personnel, allowing those personnel to work unescorted, and in some cases is required for escorted access. Hanford Facility personnel cannot perform a task for which they are not properly trained, except to gain required experience while under the direct supervision of a supervisor or coworker who is properly trained. Hanford Facility personnel must be trained within 6 months after their employment at or assignment to the Hanford Facility, or to a new job title/position at the Hanford Facility, whichever is later.

General Hanford Facility training: Refer to description in Attachment 33, Chapter 8.0, Section 8.1.

Contingency Plan training: Hanford Facility personnel receive training on applicable portions of the *Hanford Emergency Management Plan* (Permit Attachment 4) in general Hanford Facility training. In addition, Hanford Facility personnel receive training on content of the description of actions contained in contingency plan documentation in Chapter 7.0 to be able to effectively respond to emergencies.

Emergency Coordinator training: Hanford Facility personnel who perform emergency coordinator duties in WAC 173-303-360 (e.g., Building Emergency Director) in the Hanford Incident Command System receive training on implementation of the contingency plan and fulfilling the position within the Hanford Incident Command System. These Hanford Facility personnel must also become thoroughly familiar

with applicable contingency plan documentation, operations, activities, location, and properties of all waste handled, location of all records, and the unit/building layout.

Operations training: Dangerous waste management operations training (e.g., waste designation training, shippers training) is determined on a unit-by-unit basis and considers the type of waste management unit (e.g., container management unit) and the type of activities performed at the waste management unit (e.g., sampling). For example, training provided for management of dangerous waste in containers is different than the training provided for management of dangerous waste in a tank system. Common training required for compliance within similar waste management units can be provided in general training and supplemented at the TSD unit. Training provided for TSD unit-specific operations is identified in the training plan documentation based on: (1) whether a general training course exists, (2) the training needs to ensure waste management unit compliance with WAC 173-303, and (3) training commitments agreed to with Ecology.

8.1.2 Continuing Training

Continuing training meets the requirements for WAC 173-303-330(1)(b) and includes general Hanford Facility training and TSD unit-specific training.

General Hanford Facility training: Annual refresher training is provided for general Hanford Facility training. Refer to description in Attachment 33, Chapter 8.0, Section 8.1.

Contingency plan training: Annual refresher training is provided for contingency plan training. Refer to description above in Section 8.1.1.

Emergency coordinator training: Annual refresher training is provided for emergency coordinator training. Refer to description above in Section 8.1.1.

Operations training: Refresher training occurs on many frequencies (i.e., annual, every other year, every 3 years) for operations training. When justified, some training will not contain a refresher course and will be identified as a one-time only training course. The TSD unit-specific training plan documentation will specify the frequency for each training course. Refer to description above in Section 8.1.1.

8.2 DESCRIPTION OF TRAINING DESIGN

Proper design of a training program ensures personnel who perform duties on the Hanford Facility related to WAC 173-303-330(1)(d) are trained to perform their duties in compliance with WAC 173-303. Actual job tasks, referred to as duties, are used to determine training requirements. The first step taken to ensure Hanford Facility personnel have received the proper training is to determine and document the waste management duties by job title/position. The second step compares waste management duties to general waste management unit training curriculum. If general waste management unit training curriculum does not address the waste management duties, the training curriculum is supplemented and/or on-the-job training is provided. The third step summarizes the content of a training course necessary to ensure that the training provided to each job title/position addresses associated waste management duties. The last step is to assign training curriculum to Hanford Facility personnel based on the previous evaluation and actual duties assigned. The training plan documentation contains this process.

Waste management duties include those specified in Section 8.1 as well as those contained in WAC 173-303-330(1)(d). Training elements of WAC 173-303-330(1)(d) applicable to the 242-A Evaporator operations include the following:

- Procedures for using, inspecting, repairing, and replacing emergency and monitoring equipment
- Key parameters for automatic waste feed cut-off systems
- Communications or alarm systems
- Response to fires or explosions

- Shutdown of operations.

Hanford Facility personnel who perform these duties receive training pertaining to their duties. The training plan documentation described in Section 8.3 contains specific information regarding the types of training Hanford Facility personnel receive based on the outline in Section 8.1.

8.3 DESCRIPTION OF TRAINING PLAN

In accordance with Permit Condition II.C.3, the unit-specific portion of the Hanford Facility Dangerous Waste permit application must contain a description of the training plan. Training plan documentation is maintained outside of the Hanford Facility Dangerous Waste Part B permit application and the Permit. Therefore, changes made to the training plan documentation are not subject to the Permit modification process. However, the training plan documentation is prepared to comply with WAC 173-303-330(2).

Documentation prepared to meet the training plan consists of hard copy and/or electronic media as provided by Permit Condition II.C.1. The training plan documentation consists of one or more documents and/or a training database with all the components identified in the core document.

A description of how training plan documentation meets the three items in WAC 173-303-330(2) is as follows:

1. -330(2)(a): "The job title, job description, and name of the employee filling each job. The job description must include requisite skills, education, other qualifications, and duties for each position."

   Description: The specific Hanford Facility personnel job title/position is correlated to the waste management duties. Waste management duties relating to WAC 173-303 are correlated to training courses to ensure training is properly assigned.

   A listing of Hanford Facility personnel who carry out job duties relating to TSD unit waste management operations at the 242-A Evaporator are maintained. Individuals who are not performing duties of the Dangerous Waste Worker Category identified in Table 8.1 due to reassignment, medical restriction, or other limiting factors do not require current training for that category. These individuals must complete the required training for the Dangerous Waste Worker Category prior to resuming duties associated with that category.

   Information on requisite skills, education, and other qualifications for job titles/positions are addressed by providing a reference where this information is maintained (e.g., human resources). Specific information concerning job title, requisite skills, education, and other qualifications for personnel can be provided upon request.

2. -330(2)(b): "A written description of the type and amount of both introductory and continuing training required for each position."

   Description: In addition to the outline provided in Section 8.1, training courses developed to comply with the introductory and continuing training programs are identified and described in the training plan documentation. The type and amount of training is specified in the training plan documentation as shown in Table 8.1.

3. -330(2)(c): "Records documenting that personnel have received and completed the training required by this section. The Department may require, on a case-by-case basis, that training records include employee initials or signature to verify that training was received."

   Description: Training records are maintained consistent with Attachment 33, Chapter 8.0, Section 8.4.

1 **Table 8.1. 242-A Evaporator Training Matrix**

	Training Category				
Attachment 33 Chapter 8 Training Category	General Hanford Facility Training	Contingency Plan Training	Emergency Coordinator Training	Operations Training	
Operating Unit 4: 242A Evaporator	Orientation Program	Emergency Hazards Check List	Building Emergency Training	General Waste Management	Tank System Management
Dangerous Waste Worker Categories[1]					
Waste Worker	X	X	X[2]	X	X[2]
Waste Worker Supervisor/ Manager	X	X	X[2]	X	
Advanced Waste Worker	X	X	X[2]	X	
Building Emergency Director	X	X	X[2]		

[1]Dangerous Waste Worker categories are defined in the Tank Operations Contractor Dangerous Waste Training Plan (TFC-PLN-07 current revision) in the operating record

[2]Training received is commensurate with the duties performed. Individuals in this category who do not perform these duties are not required to receive this training.

Hanford Facility RCRA Permit Modification Notification Forms

Part III, Operating Unit 10
Waste Treatment and Immobilization Plant (WTP)

PCNs for quarter ending June 30, 2010:

PCN Number	Modification Form Approval Date	Facility
24590-HLW-PCN-ENV-09-003	4-29-10	HLW
24590-HLW-PCN-ENV-10-001	6-21-10	HLW
24590-PTF-PCN-ENV-05-028	4-15-10	PTF
24590-PTF-PCN-ENV-08-005	5-20-10	PTF
24590-PTF-PCN-ENV-09-005	4-6-10	PTF

This page intentionally left blank.

Quarter Ending June 30, 2010 24590-HLW-PCN-ENV-09-003

Hanford Facility RCRA Permit Modification Notification Form

Part III, Operating Unit 10

Waste Treatment and Immobilization Plant

Index

Page 2 of 3: Hanford Facility RCRA Permit, Part III, Operating Unit 10, Waste Treatment and Immobilization Plant
Replace General Arrangement (GA) drawings for the HLW Facility El. -21'-0", 0'-0", 14'-0", 37'-0", and 58'-0" in Appendix 10.4 of the Dangerous Waste Permit (DWP).

Submitted by Co-Operator:

D. M. Busche — Date: 3/16/10

Reviewed by ORP Program Office:

G. A. Girard — Date: 3/26/10

Quarter Ending June 30, 2010 24590-HLW-PCN-ENV-09-003

Hanford Facility RCRA Permit Modification Notification Form

Unit:	Permit Part:
Waste Treatment and Immobilization Plant	**Part III, Operating Unit 10**

Description of Modification:

The purpose of this class 1 prime modification is to update GA drawings for the HLW Facility El. -21'-0", 0'-0", 14'-0", 37'-0", and 58'-0" in Appendix 10.4 of the DWP. The GA for El. 14'-0" was included in this permit modification because the RLD system ancillary equipment (breakpots) previously shown on the El. 37'-"0 GA is now shown on the El. 14'-0" drawing. This change was a result of finalizing the 3D Model to show the exact position of the breakpots within the Wet Process Cell. The location of the breakpots within the cell was minimally changed, however this change resulted in depicting them on a different GA, thus the addition of this drawing to the DWP.

Appendix 10.4			
Replace:	24590-HLW-P1-P01T-00001 Rev 7	With:	24590-HLW-P1-P01T-00001 Rev 8
	24590-HLW-P1-P01T-00002 Rev 6		24590-HLW-P1-P01T-00002 Rev 7
	24590-HLW-P1-P01T-00004 Rev 6		24590-HLW-P1-P01T-00003 Rev 8
			24590-HLW-P1-P01T-00004 Rev 7
	24590-HLW-P1-P01T-00005 Rev 5		24590-HLW-P1-P01T-00005 Rev 6

This modification requests Ecology approval and incorporation into the permit the specific changes to these GA Drawings that are identified by revision notes, clouds, and revision triangles shown on the GA Drawings that have been issued since the last revision. Revisions are the result of ongoing design. The following identifies the significant types of changes on the attached drawings:

HLW Vitrification Building General Arrangement Plan at El. -21'-0" (24590-HLW-P1-P01T-00001):

- Revised Notes and Holds
- Deleted vertical chase HCH04 and modified size of vertical chase HCH05
- Corrected label on PCW-PMP-00002C

HLW Vitrification Building General Arrangement Plan at El. 0'-0" (24590-HLW-P1-P01T-00002):

- Revised Notes and Holds
- Rearranged offgas equipment in Room H-A123 and revised labels for HOP TCO/SCR skids
- Moved Secondary C5V HEPA filters from Room H-0104 (Filter Cave) to Room H-0322 (shown on El. 37' GA)

HLW Vitrification Building General Arrangement Plan at El. 37'-0" (24590-HLW-P1-P01T-00004):

- Revised Notes and Holds
- Added Secondary C5V HEPA filters to Room H-0322
- Moved breakpots RLD-BRKPT-00004/7/9, located in Room H-B014 (Wet Process Cell), from the El. 37' GA to El. 14' GA
- Removed label HPH-SUMP-00002
- Revised the elevator shaft walls, deleted vertical chase HCH04, and modified size of vertical chase HCH05

Quarter Ending June 30, 2010 24590-HLW-PCN-ENV-09-003

HLW Vitrification Building General Arrangement Plan at El. 58'-0" (24590-HLW-P1-P01T-00005):

- Revised Notes
- Updated Annex roof arrangement
- Added and revised HVAC equipment/layout
- Updated walls in vertical chases, added racks, domestic water vessel DOW-VSL-00027 and heater DOW-HTR-00005 (Grid D5)

The following is a list of outstanding change documents that have not been incorporated into this modification:
24590-HLW-P1N-P01T-00187
24590-HLW-P1N-P01T-00188
24590-HLW-P1N-P01T-00189
24590-HLW-P1N-P01T-00190

WAC 173-303-830 Modification Class:	Class 1	Class [1]1	Class 2	Class 3
Please mark the Modification Class:		X		

Enter relevant WAC 173-303-830, Appendix I Modification citation number:

Enter wording of WAC 173-303-830, Appendix I Modification citation:

In accordance with WAC 173-303-830(4)(d)(i), this modification notification is requested to be reviewed and approved as a Class [1]1 modification. WAC 173-303-830(4)(d)(ii)(A) states, "Class 1 modifications apply to minor changes that keep the permit current with routine changes to the facility or its operation. These changes do not substantially alter the permit conditions or reduce the capacity of the facility to protect human health or the environment. In the case of Class 1 modifications, the director may require prior approval."

Modification Approved/Concur: [X] Yes [ ] Denied (state reason below)

Reason for denial:

Reviewed by Ecology:

K. Elsethagen 4-29-2010

Kelly Elsethagen Date

24590-HLW-P1-P01T-00001

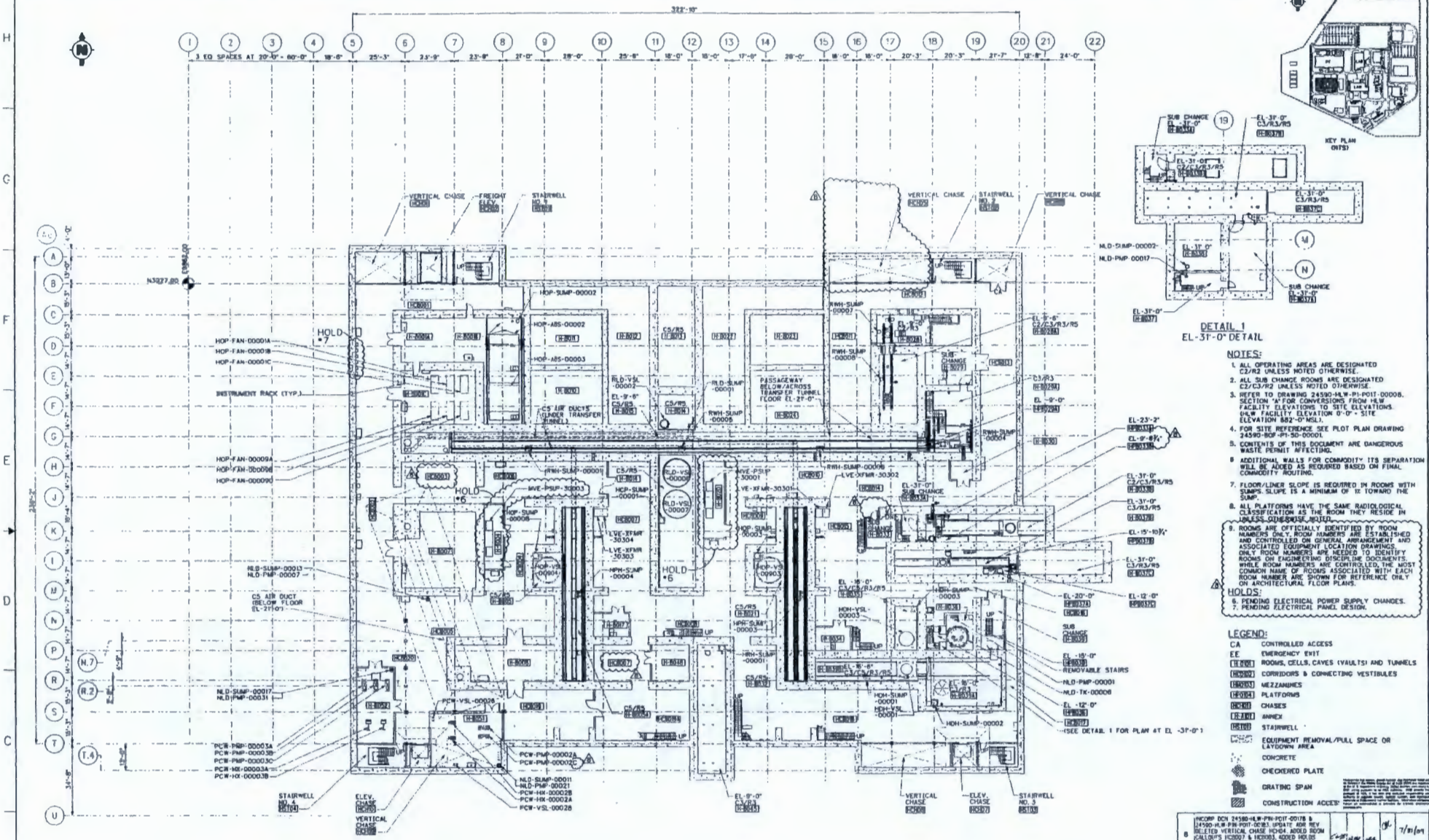

PLAN AT EL -21'-0"
(FROM EL -31'-0" TO EL -9'-0")

DETAIL 1
EL-31'-0" DETAIL

NOTES:

1. ALL OPERATING AREAS ARE DESIGNATED C2/R2 UNLESS NOTED OTHERWISE.
2. ALL SUB CHANGE ROOMS ARE DESIGNATED C2/C3/R2 UNLESS NOTED OTHERWISE.
3. REFER TO DRAWING 24590-HLW-P1-P01T-00006, SECTION "A" FOR CONVERSIONS FROM HLW FACILITY ELEVATIONS TO SITE ELEVATIONS. (HLW FACILITY ELEVATION 0'-0" = SITE ELEVATION 882'-0" MSL).
4. FOR SITE REFERENCE SEE PLOT PLAN DRAWING 24590-BOF-P1-S0-00001.
5. CONTENTS OF THIS DOCUMENT ARE DANGEROUS WASTE PERMIT AFFECTING.
6. ADDITIONAL WALLS FOR COMMODITY ITS SEPARATION WILL BE ADDED AS REQUIRED BASED ON FINAL COMMODITY ROUTING.
7. FLOOR/LINER SLOPE IS REQUIRED IN ROOMS WITH SUMPS. SLOPE IS A MINIMUM OF 1% TOWARD THE SUMP.
8. ALL PLATFORMS HAVE THE SAME RADIOLOGICAL CLASSIFICATION AS THE ROOM THEY RESIDE IN UNLESS OTHERWISE NOTED.
9. ROOMS ARE OFFICIALLY IDENTIFIED BY ROOM NUMBERS ONLY. ROOM NUMBERS ARE ESTABLISHED AND CONTROLLED ON GENERAL ARRANGEMENT AND ASSOCIATED EQUIPMENT LOCATION DRAWINGS. ONLY ROOM NUMBERS ARE NEEDED TO IDENTIFY ROOMS ON ENGINEERING DISCIPLINE DOCUMENTS. WHILE ROOM NUMBERS ARE CONTROLLED, THE MOST COMMON NAME OF ROOMS ASSOCIATED WITH EACH ROOM NUMBER ARE SHOWN FOR REFERENCE ONLY ON ARCHITECTURAL FLOOR PLANS.

HOLDS:

6. PENDING ELECTRICAL POWER SUPPLY CHANGES.
7. PENDING ELECTRICAL PANEL DESIGN.

LEGEND:

CA	CONTROLLED ACCESS
EE	EMERGENCY EXIT
H-100	ROOMS, CELLS, CAVES (VAULTS) AND TUNNELS
H-200	CORRIDORS & CONNECTING VESTIBULES
H-300	MEZZANINES
H-400	PLATFORMS
H-500	CHASES
H-600	ANNEX
H-700	STAIRWELL
	EQUIPMENT REMOVAL/PULL SPACE OR LAYDOWN AREA
	CONCRETE
	CHECKERED PLATE
	GRATING SPAN
	CONSTRUCTION ACCESS

REVISION HISTORY

REV	DESCRIPTION	ORG	CHKD	RVWD	APVD	DATE
8	INCORP DCN 24590-HLW-PIN-P01T-00178 & 24590-HLW-PIN-P01T-00181. UPDATE ADM REV DELETED VERTICAL CHASE HCH04. ADDED ROOM CALOUTS H2001 & H2003. ADDED HOLDS 6 & 7. PCW-PMP-00002C WAS PCW-PMP-00028.	[illegible]	MAC	MAL	[illegible]	7/31/09
7	REMOVED PUMP PCW-00002C. REVISED ADM. REVISED RADIOLOGICAL CLASSIFICATIONS ADDED NOTE 7 AND 8.	MAC	MAL	DSS	CW A C TV	2/5/08
6	INCORPORATED DCNS 24590-HLW-PIN-P01T-00118, 00124, 00158.	MAC	MAL	JC	DJ	2/14/06
5	INCORPORATED DCNS 24590-HLW-PIN-P01T-00008, 00038, 00044, 00081, 00097, 00105 AND 00114. DELETED EQUIPMENT. ADDED BOUNDING AREA AROUND HOP FANS.	MAC	MAL	MM	JS	10/14/04
0	ISSUED FOR DESIGN-SUPERSEDES 24590-HLW-P1-S01T-00001	TL	DG		MM SCF	4/18/02

RIVER PROTECTION PROJECT
WASTE TREATMENT PLANT
2435 STEVENS CENTER PLACE
RICHLAND, WA 99354

CONTRACT No. DE-AC27-01RV14136

HLW VITRIFICATION BUILDING GENERAL ARRANGEMENT PLAN AT EL -21'-0"

SCALE: 1/8"=1'-0"

24590-HLW-P1-P01T-00001

REV 8

PROJECT No. 24590
SITE HANFORD
AREA 200E
BUILDING No. 30

	BY	DATE
DESIGNATOR	T. LOGAN	4/18/02
CHECKER	D. GOTT	4/18/02
APPROVER	[illegible]	4/18/02
REVIEWER	N/A	

CONTENT APPLICABLE TO ALARA? YES NO
ADM NO. 24590-HLW-ADE-PL-02-001 REV. 0
CARS SCREENING REQUIRED? YES NO CARS TRACKING # N/A

C SIZE 64424
COMPUTER GENERATED - MANUAL DESIGN CHANGES NOT PERMITTED

07/31/2009 03:24:43 PM

24590-HLW-P1-P01T-00002

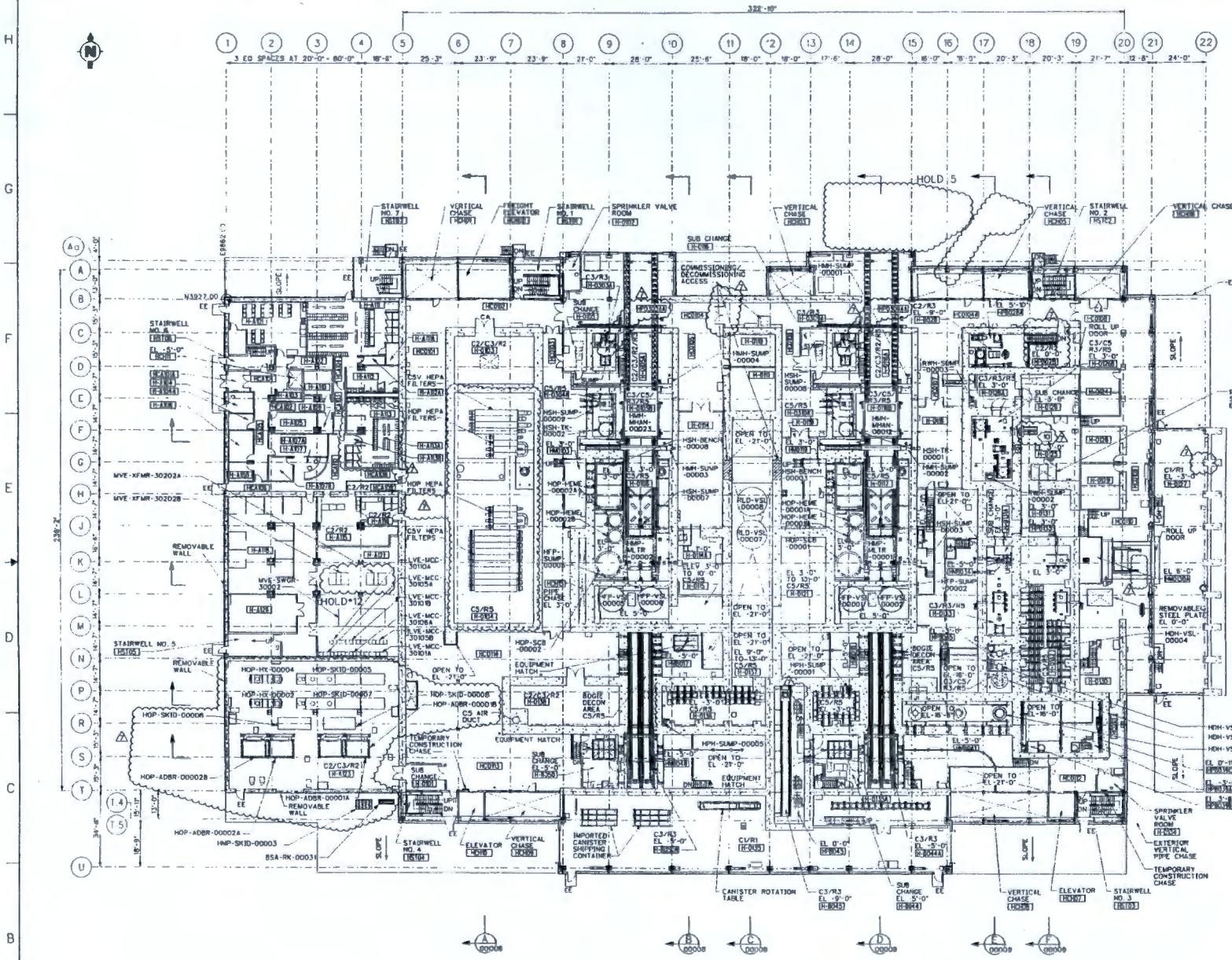

PLAN AT EL 0'-0"

(FROM EL -9'-0" TO EL 11'-0")

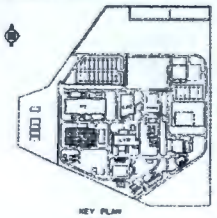

KEY PLAN (NTS)

NOTES:

1. ALL OPERATING AREAS ARE DESIGNATED C2/R2 UNLESS NOTED OTHERWISE. ANNEX ROOMS (B-T/1-5) ARE C1/R1 UNLESS NOTED OTHERWISE.
2. ALL SUB CHANGE ROOMS ARE DESIGNATED C2/C3/R2 UNLESS NOTED OTHERWISE.
3. REFER TO DRAWING 24590-HLW-P1-P01T-00008, SECTION "A" FOR CONVERSIONS FROM HLW FACILITY ELEVATIONS TO SITE ELEVATIONS. (HLW FACILITY ELEVATION 0'-0" = SITE ELEVATION 682'-0" MSL).
4. FOR REFERENCE SEE PLOT PLAN DRAWING 24590-BOF-P1-S0-00001.
5. CONTENTS OF THIS DOCUMENT ARE DANGEROUS WASTE PERMIT AFFECTING.
6. ADDITIONAL WALLS FOR COMMODITY ITS SEPARATION WILL BE ADDED AS REQUIRED BASED ON FINAL COMMODITY ROUTING.
7. FLOOR/LINER SLOPE IS REQUIRED IN ROOMS WITH SUMPS. SLOPE IS A MINIMUM OF 1% TOWARD THE SUMP.
8. ALL PLATFORMS HAVE THE SAME RADIOLOGICAL CLASSIFICATION AS THE ROOM THEY RESIDE IN UNLESS OTHERWISE NOTED.
9. ROOMS ARE OFFICIALLY IDENTIFIED BY ROOM NUMBERS ONLY. ROOM NUMBERS ARE ESTABLISHED AND CONTROLLED ON GENERAL ARRANGEMENT AND ASSOCIATED EQUIPMENT LOCATION DRAWINGS. ONLY ROOM NUMBERS ARE NEEDED TO IDENTIFY ROOMS ON ENGINEERING DISCIPLINE DOCUMENTS. WHILE ROOM NUMBERS ARE CONTROLLED, THE MOST COMMON NAME OF ROOMS ASSOCIATED WITH EACH ROOM NUMBER ARE SHOWN FOR REFERENCE ONLY ON ARCHITECTURAL FLOOR PLANS.
10. THE AREA DIRECTLY ABOVE AND BELOW GLOVE BOX IS RATED C2/R3

HOLDS:

5. HOLD PENDING MH EQUIPMENT DEVELOPMENT.
11. NOT USED
12. HOLD PENDING EDG DEVELOPEMENT
13. NOT USED.
21. NOT USED.

LEGEND:

CA	CONTROLLED ACCESS
EE	EMERGENCY EXIT
H-001	ROOMS, CELLS, CAVES (VAULTS) AND TUNNELS
HC001	CORRIDORS & CONNECTING VESTIBULES
HM003	MEZZANINES
HP004	PLATFORMS
HC001	CHASES
H-A001	ANNEX
HS101	STAIRWELL
	EQUIPMENT REMOVAL/PULL SPACE OR LAYDOWN AREA
	CONCRETE
	CHECKERED PLATE
	GRATING SPAN
	CONSTRUCTION ACCESS

REV	DESCRIPTION	DRG	CHKD	REVIEWED	APVD	DATE
7	INCORPORATED DCN 24590-HLW-P1-P01T-00080 24590-HLW-P1-P01T-00077 & 24590-HLW-P1-P01T-00085, ADDED 24590-WTP-TC-E-08-0405, RECONFIGURED ROOM H-A93, DELETED VERTICAL CHASE HCH04A REMOVED HCH-CBH-00004 UPDATED AIR REV. INCORPORATED DCN 24590-HLW-P1-P01T-00081, MOVED P.W. HEPA FILTERS TO 3'-6" EL. DESIGNATED PLATFORM HP002A AS C2/R2, ADDED FLAG NOTE 10. REMOVED LADDER FOR HP01274. REMOVED HOLDS 16 & 17. ADDED CORBELS. REVISED PLATFORMS HP001C3 AND HP001B REVISED ROOMS H-0303A AND H-0306A REMOVED HOP-VSL-00021 AND HOP-VSL-00022 REVISED HEPA FILTERS. ADDED DOORS TO CHASES. REVISED EQUIPMENT. ADDED REMOVABLE WALLS IN ANNEX. ADDED HOP-SKID-00003. ADDED PLATFORM HP-S3A REVISED ROOM RADIOLOGICAL CLASSIFICATIONS. ADDED EXTERIOR VERTICAL PIPE CHASE. MOVED WALLS REMOVED WALLS CAUSING ROOMS H-A117 AND H-A118 TO BE REMOVED. REVISED MCC CALLOUTS. REVISED ADR. ADDED NOTES 7 AND 8.	TJL	KAC	NMB	DSS	CB AJC	2/05/08
0	ISSUED FOR DESIGN - SUPERSEDES DRAWING DWG-H-J3/5HV-TL0006 REV. C	TL	DC		MB SO	5/17/02

REVISION HISTORY

	BY	DATE
ORIGINATOR	TIM LOGAN	5/17/02
CHECKER	DAVE GRIFF	5/17/02
APPROVER	MARK E FIELDER	5/17/02
REVIEWER	N/A	

RIVER PROTECTION PROJECT
WASTE TREATMENT PLANT
2435 STEVENS CENTER PLACE
RICHLAND, WA 99354

CONTRACT No: DE-AC27-01RV14136

HLW VITRIFICATION BUILDING GENERAL ARRANGEMENT PLAN AT EL 0'-0"

SCALE: 1/16"=1'-0"

24590-HLW-P1-P01T-00002

REV 7

24590-HLW-P1-P01T-00003

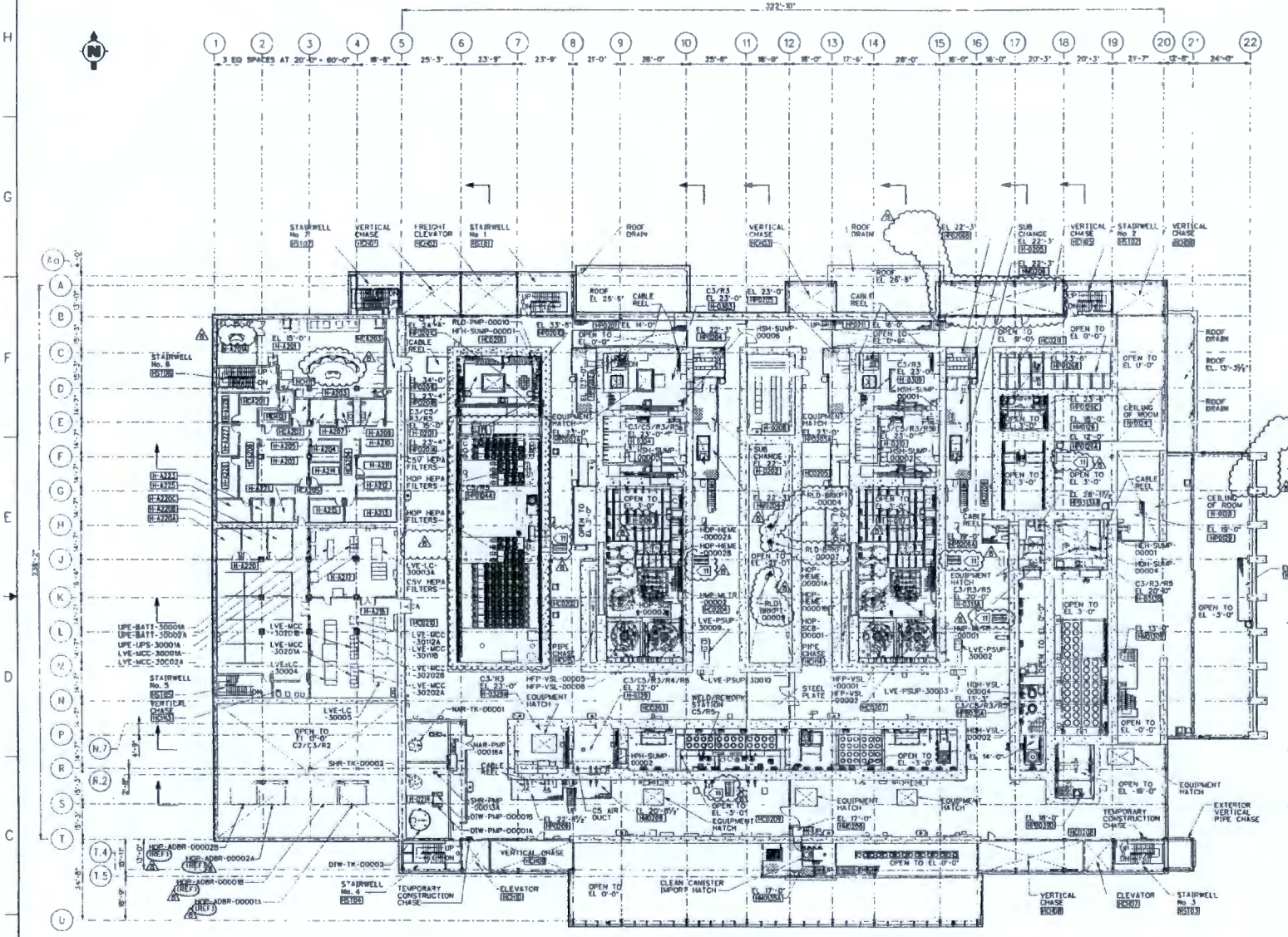

PLAN AT EL 14'-0"
(FROM EL 11'-0" TO EL 33'-0")

KEY PLAN
(NTS)

NOTES:

1. ALL OPERATING AREAS ARE DESIGNATED C2/R2 UNLESS NOTED OTHERWISE. ANNEX ROOMS (B-T/1-5) ARE C1/R1 UNLESS NOTED OTHERWISE.
2. ALL SUB CHANGE ROOMS ARE DESIGNATED C2/C3/R2 UNLESS NOTED OTHERWISE.
3. REFER TO DRAWING 24590-HLW-P1-P01T-00008, SECTION "A" FOR CONVERSIONS FROM HLW FACILITY ELEVATIONS TO SITE ELEVATIONS. (HLW FACILITY ELEVATION 0'-0" = SITE ELEVATION 682'-0" MSL).
4. FOR REFERENCE, SEE PLOT PLAN DRAWING 24590-BOF-P1-50-00001.
5. DELETED.
6. ADDITIONAL WALLS FOR COMMODITY ITS SEPARATION WILL BE ADDED AS REQUIRED BASED ON FINAL COMMODITY ROUTING.
7. FLOOR/LINER SLOPE IS REQUIRED IN ROOMS WITH SUMPS. SLOPE IS A MINIMUM OF 1% TOWARD THE SUMP. SLOPE FLOOR IN ROOM H-0214 TOWARD DRAIN. SLOPE IS A MINIMUM OF 1% TOWARD DRAIN.
8. ALL PLATFORMS HAVE THE SAME RADIOLOGICAL CLASSIFICATION AS THE ROOM THEY RESIDE IN UNLESS OTHERWISE NOTED.
9. CONTENTS OF THIS DOCUMENT ARE DANGEROUS WASTE PERMIT AFFECTING.
10. ROOMS ARE OFFICIALLY IDENTIFIED BY ROOM NUMBERS ONLY. ROOM NUMBERS ARE ESTABLISHED AND CONTROLLED ON GENERAL ARRANGEMENT AND ASSOCIATED EQUIPMENT LOCATION DRAWINGS. ONLY ROOM NUMBERS ARE NEEDED TO IDENTIFY ROOMS ON ENGINEERING DISCIPLINE DOCUMENTS. WHILE ROOM NUMBERS ARE CONTROLLED, THE MOST COMMON NAME OF ROOMS ASSOCIATED WITH EACH ROOM NUMBER ARE SHOWN FOR REFERENCE ONLY ON ARCHITECTURAL FLOOR PLANS.
11. THE AREA DIRECTLY ABOVE AND BELOW THE GLOVE BOX IS RATED C2/R3.

LEGEND:

CA	CONTROLLED ACCESS
EE	EMERGENCY EXIT
H-R001	ROOMS, CELLS, CAVES (VAULTS) AND TUNNELS
H-C002	CORRIDORS & CONNECTING VESTIBULES
H-M003	MEZZANINES
H-P004	PLATFORMS
H-H01	CHASES
H-A001	ANNEX
H-S001	STAIRWELL
	EQUIPMENT REMOVAL/PULL SPACE OR LAYDOWN AREA
	CONCRETE
	CHECKERED PLATE
	GRATING SPAN
	CONSTRUCTION ACCESS

REV	DESCRIPTION	DRG	CHKD	REVD	APVD	DATE
8	INCORPORATED DCN 24590-HLW-P1N-P01T-00187, UPDATED CONTROL ROOM PER NCR 000005, ADDED REF TO NOF ADBR 000018,19,20,28, ADDED ROOM "S" PER & H-0117, DELETED VERTICAL CHASE H0104, REVISED VERTICAL CHASE H0105, ADDED BLD-BRKP1 00004, 00007 & 00002, UPDATED ADR REV MOVED PRV HEPA FILTERS TO EL 57'-0" RECONFIGURED FILTER BANKS IN HP0004, ADDED FLAG NOTE 11, REMOVED PLATFORM HP0027A	SMC	WMC	AKG	JPK	7/31/09
7	REMOVED LVE-MCC-30004 AND 30005, ADDED PLATFORMS HP0002A AND HP0002B, REVISED EQUIPMENT REVISED ROOM RADIOLOGICAL CLASSIFICATIONS ADDED EXTERIOR VERTICAL PIPE CHASE REVISED ADR INCORPORATED DCN 24590-HLW-P1N-P01T-00172 & 24590-HLW-P1N-P01T-00181, ADDED NOTES 7, 8 AND 9, REVISED LVE-LC-30003A, ADDED PLATFORM	KAC	MAL	DSS	CW JLC	2/5/08
6	INCORPORATED DCN'S 24590-HLW-P1N-P01T-00163, -00126, -00136, AND -00145, REMOVED NOTES 11, 15, AND 17, ADDED PLATFORM HP0703AA ADDED DEPICTION OF FILTER CAVE CRANE AND RAILS, MOVED ROOMS H-0202 AND H-0205 TO THE EAST SIDE OF MELTER CAVES, REVISED HM0206, HP0203, HP0203, HM0204, HP0234, HM0203A, AND HP0202, REVISED H-0201, H-0203, H-0204, H-0209, AND H-0210 ROOM CLASSIFICATIONS, REVISED SECTION CUT DEPICTION FOR CLARITY	PML	KAC	WTN	JS	04/15/05
5	INCORPORATED DCN'S 24590-HLW-P1N-P01T-00070, 00118, 00167, 00120 AND 00114.	KAC	BAN	WTN	SM	11/18/04
4	INCORPORATED DCN'S 24590-HLW-P1N-P01T-00011, 00012, 00013, 00048, 00061, 00071, 00075, 00097, 00020 AND 00083, ADDED HANDRAIL.	KAC	MAL	DG	MBR	07/14/04
0	ISSUED FOR DESIGN - SUPERSEDES DRAWING DWG-H-375PN-PL00017, REV H.	TI	DG		SM SCF	7/30/02

REVISION HISTORY

DESIGNED BY RPP-WTP PGD	PROJECT No. 24590	
	SITE HANFORD	
	AREA 200E	
HOME STAMP	BUILDING No. 30	
	BY	DATE
ORIGINATOR	TIM GOHM	7/29/02
CHECKER	DAVID GOTT	7/29/02
APPROVER	APPLICABLE DISCIPLINE	7/29/02
REVIEWER	N/A	

CONTENT APPLICABLE TO ALARA? YES NO
ADR NO. 24590-HLW-ADR-PL-02-003 REV 1

RIVER PROTECTION PROJECT WASTE TREATMENT PLANT
2435 STEVENS CENTER PLACE
RICHLAND, WA 99354

CONTRACT No. DE-AC27-01RV14136

HLW VITRIFICATION BUILDING GENERAL ARRANGEMENT PLAN AT EL 14'-0"

SCALE: 1/8"=1'-0"

24590-HLW-P1-P01T-00003

REV 8

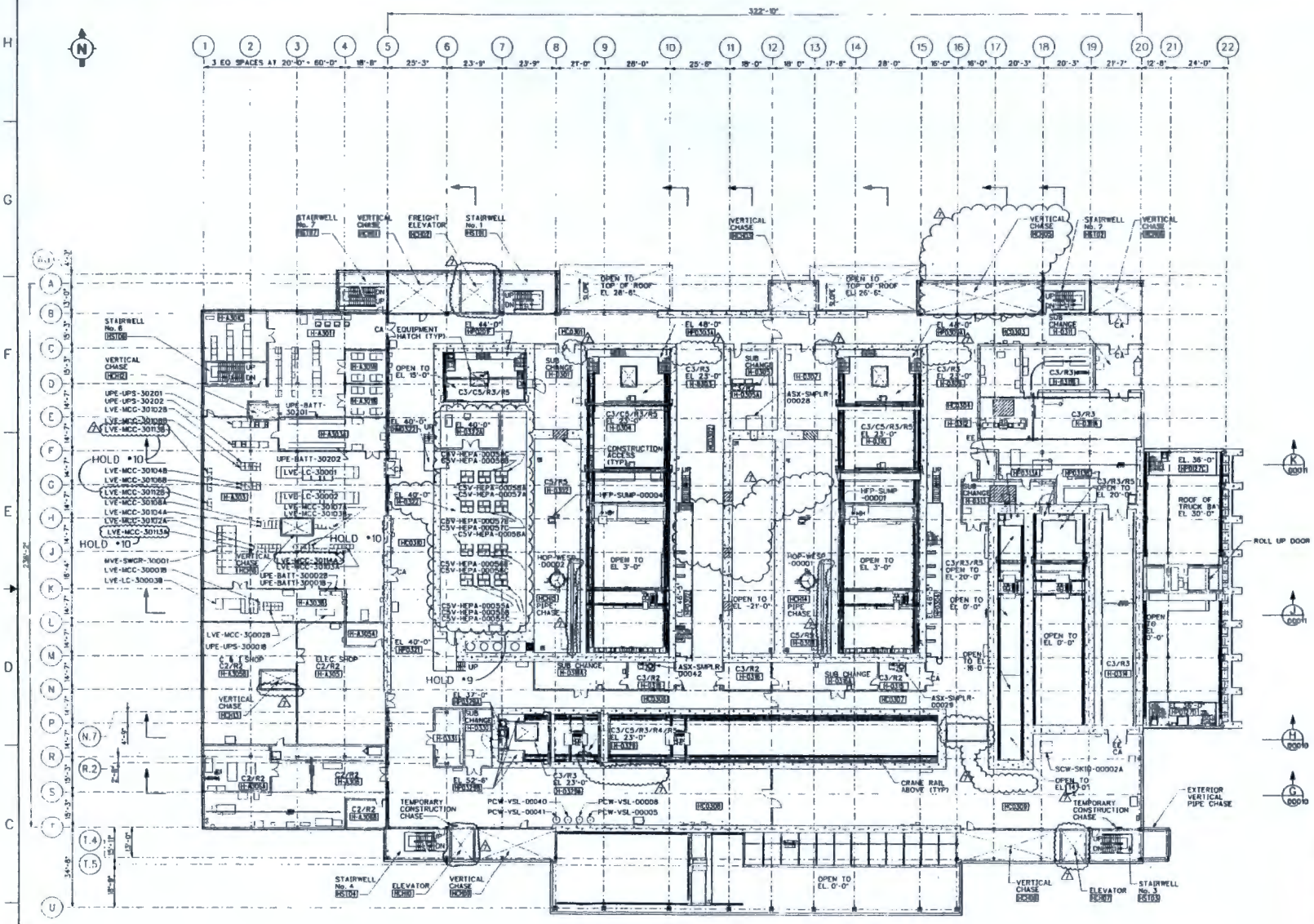

PLAN AT EL 37'-0"
(FROM EL 33'-0 TO EL 54'-0")

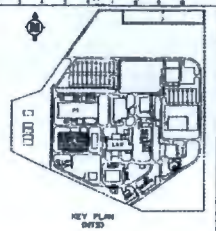

KEY PLAN

NOTES:

1. ALL OPERATING AREAS ARE DESIGNATED C2/R2 UNLESS NOTED OTHERWISE. ANNEX ROOMS (B-1/1-5) ARE C1/R1 UNLESS NOTED OTHERWISE.
2. ALL SUB CHANGE ROOMS ARE DESIGNATED C2/C3/R2 UNLESS NOTED OTHERWISE.
3. REFER TO DRAWING 24590-HLW-P1-P01T-00008 SECTION "A" FOR CONVERSIONS FROM HLW FACILITY ELEVATIONS TO SITE ELEVATIONS. HLW FACILITY ELEVATION 0'-0" = SITE ELEVATION 682'-0" MSL).
4. FOR REFERENCE SEE PLOT PLAN DRAWING 24590-BOF-P1-50-00001.
5. ADDITIONAL WALLS FOR COMMODITY ITS SEPARATION WILL BE ADDED AS REQUIRED BASED ON FINAL COMMODITY ROUTING.
6. FLOOR/LINER SLOPE IS REQUIRED IN ROOMS WITH SUMPS. SLOPE IS A MINIMUM OF 1% TOWARD THE SUMP.
7. ALL PLATFORMS HAVE THE SAME RADIOLOGICAL CLASSIFICATION AS THE ROOM THEY RESIDE IN UNLESS OTHERWISE NOTED.
8. CONTENTS OF THIS DOCUMENT ARE DANGEROUS WASTE PERMIT AFFECTING.
9. ROOMS ARE OFFICIALLY IDENTIFIED BY ROOM NUMBERS ONLY. ROOM NUMBERS ARE ESTABLISHED AND CONTROLLED ON GENERAL ARRANGEMENT AND ASSOCIATED EQUIPMENT LOCATION DRAWINGS. ONLY ROOM NUMBERS ARE NEEDED TO IDENTIFY ROOMS ON ENGINEERING DISCIPLINE DOCUMENTS. WHILE ROOM NUMBERS ARE CONTROLLED, THE MOST COMMON NAME OF ROOMS ASSOCIATED WITH EACH ROOM NUMBER ARE SHOWN FOR REFERENCE ONLY ON ARCHITECTURAL FLOOR PLANS.

HOLDS:

1. NOT USED.
2. NOT USED.
3. DELETED
4. NOT USED.
5. NOT USED.
6. NOT USED.
7. NOT USED.
8. DELETED
9. HOLD PENDING HVAC DEVELOPMENT
10. HOLD FOR ELECTRICALS RE-EVALUATION FOR NECESSITY

LEGEND:

CA	CONTROLLED ACCESS
EE	EMERGENCY EXIT
H-3101	ROOMS, CELLS, CAVES (VAULTS) AND TUNNELS
HC3102	CORRIDORS & CONNECTING VESTIBULES
HC3103	MEZZANINES
P3104	PLATFORMS
HC3101	CHASES
H-3101	ANNEX
S3101	STAIRWELL
	EQUIPMENT REMOVAL/PULL SPACE OR LAYDOWN AREA
	CONCRETE
	CHECKERED PLATE
	GRATING SPAN
	CONSTRUCTION ACCESS

REV	DESCRIPTION	ORG	CHKD	REVWD	APVD	DATE
7	INCORPORATED DCN 24590-HLW-P1-P01T-00197. REVISED LVE-MCC-301134 TO 301138. DELETED VERTICAL CHASE HC3104. REVISED VERTICAL CHASE HC3105. DELETED ELD-SMPL-00004, -00007, -00009 & HFP SUMP-00002. REVISED OPEN TO EL 0'-0" TO 14'-0". (UPDATED ADR REV. ADDED HOLD NOTES #5 & #10. ADDED CURBING. REVISED ELEVATOR HC3107, HC3112, HC3113.					11/19/09
6	REVISED EQUIPMENT LAYOUT IN ROOMS H-4303, H-4303A, H-4303B. REVISED CALLOUT HC3113 TO HC3118. REVISED ROOM RADIOLOGICAL CLASSIFICATIONS. ADDED SUB CHANGE CALLOUT REMOVED HOLD 5 AND 8. INCORPORATED DCN 24590-HLW-P1H-P01T-00173 & 24590-HLW-P1H-P01T-00181. REVISED ADR ADDED NOTES 6, 7 AND 8. ADDED EXTERIOR PIPE CHASE. REMOVED ASX-SMPLR-00041. CHANGED MATCH ORIENTATION IN ROOMS H-3303 AND H-3309.	KAC	NML	DSS	CW JC	2/5/08
5	INCORPORATED DCN 24590-HLW-P1H-P01T-00106, 00127, 00135, 00138 AND 00147.	KAC	NML	JC	CW DJ	2/14/08
4	INCORPORATED DCN 24590-HLW-P1H-P01T-00092, 00090, 00085, 00091 (RH1 AND 00104. ADDED HOLD 3 AND 8. REVISED PLATFORM ELEVATIONS. MOVED DOORS. DELETED PLATFORMS AND EQUIPMENT. REMOVED HOLD 1 & 2. ADDED DOORS ADDED CONSTRUCTION ACCESSIFS. MODIFIC CHASE CA. CUTS. REVISE ROOF ELEVATION REVISED ROOM CLASSIFICATIONS	KAC	NML	WM	JS	10/13/04
0	ISSUED FOR DESIGN SUPERVISOR'S DRAWING DRC-A372av-PLOOC3L REV. C	TL	DG		SCT MM	8/27/02

REVISION HISTORY

RIVER PROTECTION PROJECT
WASTE TREATMENT PLANT
2435 STEVENS CENTER PLACE
RICHLAND, WA 99354

CONTRACT No. DE-AC27-01RV14136

HLW VITRIFICATION BUILDING GENERAL ARRANGEMENT PLAN AT EL 37'-0"

PROJECT No. 24590		
SITE HANFORD		
AREA ZONE		
BUILDING No. 30		
ORIGINATOR	TM LOGAN	8/28/02
CHECKER	DAVID GOTT	8/28/02
APPROVER		8/28/02
REVIEWER	N/A	

SCALE 1/16"=1'-0"

24590-HLW-P1-P01T-00004

REV 7

09/24/2009 07:08:13 AM

24590-HLW-P1-P01T-00005

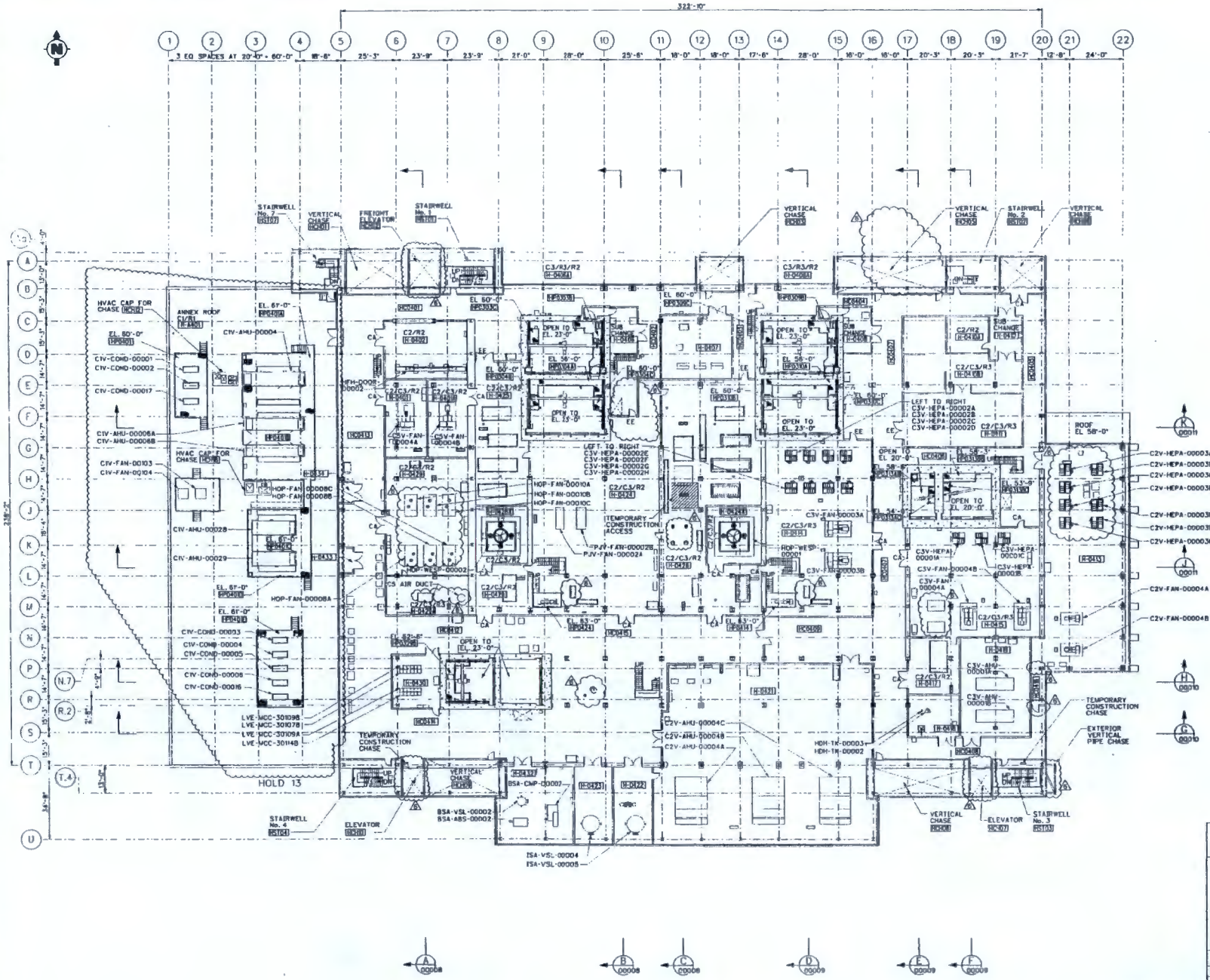

PLAN AT EL 58'-0"
(FROM EL 54'-0" TO EL 68'-0")

NOTES:

1. ALL OPERATING AREAS ARE DESIGNATED C2/R2 UNLESS NOTED OTHERWISE. ANNEX ROOMS (B-T/1-5) ARE C1/R1 UNLESS NOTED OTHERWISE.
2. ALL SUB CHANGE ROOMS ARE DESIGNATED C2/C3/R2 UNLESS NOTED OTHERWISE.
3. REFER TO DRAWING 24590 HLW P1 P01T 00008, SECTION "A" FOR CONVERSIONS FROM HLW FACILITY ELEVATIONS TO SITE ELEVATIONS. (HLW FACILITY ELEVATION 0'-0" = SITE ELEVATION 682'-0" MSL).
4. FOR REFERENCE SEE PLOT PLAN DRAWING 24590-BOF-P1-S0-00001.
5. NOT USED.
6. CONTENTS OF THIS DOCUMENT ARE DANGEROUS WASTE PERMIT AFFECTING.
7. ALL PLATFORMS HAVE THE SAME RADIOLOGICAL CLASSIFICATION AS THE ROOM THEY RESIDE IN UNLESS OTHERWISE NOTED.
8. ROOMS ARE OFFICIALLY IDENTIFIED BY ROOM NUMBERS ONLY. ROOM NUMBERS ARE ESTABLISHED AND CONTROLLED ON GENERAL ARRANGEMENT AND ASSOCIATED EQUIPMENT LOCATION DRAWINGS. ONLY ROOM NUMBERS ARE NEEDED TO IDENTIFY ROOMS ON ENGINEERING DISCIPLINE DOCUMENTS. WHILE ROOM NUMBERS ARE CONTROLLED, THE MOST COMMON NAME OF ROOMS ASSOCIATED WITH EACH ROOM NUMBER ARE SHOWN FOR REFERENCE ONLY ON ARCHITECTURAL FLOOR PLANS.

HOLDS:

1. NOT USED.
2. NOT USED.
3. NOT USED.
4. NOT USED.
5. NOT USED.
6. NOT USED.
7. NOT USED.
8. NOT USED.
9. NOT USED.
10. NOT USED.
11. NOT USED.
12. DELETED
13. HOLD PENDING CSA SEISMIC CALCULATION AND HVAC LAYOUT.

LEGEND:

CA	CONTROLLED ACCESS
EE	EMERGENCY EXIT
H-0001	ROOMS, CELLS, CAVES (VAULTS) AND TUNNELS
H-0002	CORRIDORS & CONNECTING VESTIBULES
H-0003	MEZZANINES
HP0104	PLATFORMS
H-0101	CHASES
H-1101	ANNEX
HS1101	STAIRS
	EQUIPMENT REMOVAL/PULL SPACE OR LAYDOWN AREA
	CONCRETE
	CHECKERED PLATE
	GRATING SPAN
	CONSTRUCTION ACCESS

REV	DESCRIPTION	ORG	CHKD	REVWD	APVD	DATE
8	INCORPORATED DCN 24590-HLW-PIN-P01T-00183 UPDATED ELEVATION SHAFT WALLS, UPDATED VERTICAL PIPE CHASE, UPDATED ANNEX ROOF AREAS, ADDED BACKGROUND DETAILS FOR NEW AND RELOCATED EQUIPMENT, REVISED ADR REV	TCP	MAL	MAC		1-21-09
5	REMOVED HOLD 12, REMOVED PLATFORM HP0408 AND HP0418, REVISED STAIRS, REMOVED UDR-5600-00004, MOVED PJV AND HOP FANS, REVISED PLATFORM CALLOUTS, ADDED NOTES 6 AND 7 REVISED CALLOUTS, MOVED WALLS AND DOORS ADDED PLATFORMS HP0424 AND HP0418 ADDED RADIOLOGICAL CLASSIFICATIONS TO ROOMS H-0408A AND H-0408B, ADDED SUB-CHANGE CALLOUTS, ADDED EXTERIOR VERTICAL PIPE CHASE, ADDED NEW COLUMNS PER RCM EFFORT, ADDED WALL IN SOUTH END OF ROOM H-0429. INCORPORATED DCN 24590 HLW PIN-P01T-00171 & 24590-HLW-PIN-P01T-00181. REVISED ADR.	NAC	MAL	DGS	CW JLC	2/5/08
0	ISSUED FOR DESIGN, SUPERSEDES DRAWING CWG-M375HV-PL00019, REV. 0.	BN	DG		MM GD	10/1/02

REVISION HISTORY

PROJECT No.	24590	
SITE	HANFORD	
AREA	200E	
FILE/DWG No.	30	
	BY	DATE
ORIGINATOR	BRIAN A. MANCE	10/1/02
CHECKER	DAVID DOTT	10/1/02
APPROVER		10/1/02
REVIEWER	N/A	

CONTENT APPLICABLE TO ALARA? YES NO
ADR NO. 24590-HLW-ADR-PL-02-003 REV. 0

RIVER PROTECTION PROJECT
WASTE TREATMENT PLANT
2435 STEVENS CENTER PLACE
RICHLAND, WA 99354

CONTRACT No. DE-AC27-01RV14136

HLW VITRIFICATION BUILDING GENERAL ARRANGEMENT PLAN AT EL 58'-0"

SCALE: 1/16"=1'-0"

24590-HLW-P1-P01T-00005

REV 6

SIZE - 44x34

08/15/2008 02:03:06 PM

Quarter Ending June 30, 2010 24590-HLW-PCN-ENV-10-001

Hanford Facility RCRA Permit Modification Notification Form

Part III, Operating Unit 10

Waste Treatment and Immobilization Plant

Index

Page 2 of 2: Hanford Facility RCRA Permit, Part III, Operating Unit 10, Waste Treatment and Immobilization Plant
Replace *System Logic Description for High-Level Waste Facility - Melter Process (HMP) System* (24590-HLW-PER-J-04-0004 Rev. 0) with Rev. 1 in Appendix 10.13 of the Dangerous Waste Permit (DWP).

Submitted by Co-Operator:

Donna M. Busche 3/18/10

D. M. Busche Date

Reviewed by ORP Program Office:

G. A. Girard 4/12/10

Date

Quarter Ending June 30, 2010 24590-HLW-PCN-ENV-10-001

Hanford Facility RCRA Permit Modification Notification Form	
Unit: **Waste Treatment and Immobilization Plant**	Permit Part: **Part III, Operating Unit 10**

Description of Modification:

The purpose of this class 1 modification is to replace the *System Logic Description for High-Level Waste Facility - Melter Process (HMP) System* (24590-HLW-PER-J-04-0004 Rev. 0) with Revision 1 in Appendix 10.13 of the DWP. The updated document aligns the description of instrument logic with the list of instruments located in the approved Permit Table III.10.J.C – HLW Vitrification System Process and Leak Detection System Instruments and Parameters.

Appendix 10.13			
Replace:	24590-HLW-PER-J-04-0004 Rev 0	With:	24590-HLW-PER-J-04-0004 Rev 1

This modification requests Ecology to approve and replace the instrument logic document for the HMP system describing the additional monitoring instruments. These additional instruments were incorporated into the DWP Table III.10.J.C. on October 29, 2007 (CCN 166874). This permit modification does not include any design changes or additional instruments beyond those already incorporated into the DWP.

The HMP system logic document update was a total revision with no notes, clouds, or revision triangles to indicate the changes. However, this document was modeled after the Low-Activity Waste facility melter process (LMP) system logic description that was incorporated into the permit in July 2009; this document was not included in the latest permit version.

The summary of changes is provided below:

- Updated list of acronyms
- Revised description of the HMP system components associated with the permitted instruments
- Revised Table 1 to add instruments from Permit Table III.10.J.C – HLW Vitrification System Process and Leak Detection System Instruments and Parameters
- Revised and added Figures

The following is a list of outstanding change documents that have not been incorporated into this modification:

None

WAC 173-303-830 Modification Class:	Class 1	Class [1]1	Class 2	Class 3
Please mark the Modification Class:	X			

Enter relevant WAC 173-303-830, Appendix I Modification citation number:
A.1 and A.4a

Enter wording of WAC 173-303-830, Appendix I Modification citation:
A.1. Administrative and informational changes
A.4a. To provide more frequent monitoring, reporting, sampling, or maintenance

Modification Approved/Concur: [X] Yes [ ] Denied (state reason below)

Reason for denial:

Reviewed by Ecology:

Kelly Elsethagen 6/21/10 Date

ISSUED BY
RPP-WTP PDC

R11169345

System Logic Description for High-Level Waste Facility - Melter Process (HMP) System

Document title:

Document number: 24590-HLW-PER-J-04-0004, Rev 1

Contract number: DE-AC27-01RV14136

Department: Controls and Instrumentation

Author(s): Joe Horn

Checked by: Mark Friedrich

Issue status: Issued for Permitting Use

Approved by: Wayne Underhill

Approver's position: C&I Department

Approver's signature: _____ Signature _____ 3/8/10 Date

River Protection Project
Waste Treatment Plant
2435 Stevens Center Place
Richland, WA 99354
United States of America
Tel: 509 371 2000

Notice

Please note that source, special nuclear, and byproduct materials, as defined in the Atomic Energy Act of 1954 (AEA), are regulated at the US Department of Energy (DOE) facilities exclusively by DOE acting pursuant to its AEA authority. DOE asserts, that pursuant to the AEA, it has sole and exclusive responsibility and authority to regulate source, special nuclear, and byproduct materials at DOE-owned nuclear facilities. Information contained herein on radionuclides is provided for process description purposes only.

Contents

Notice iii
History Sheet iv
Acronyms vi
Glossary 1
1 Introduction 2
2 Applicable Documents 2
3 Description 3
3.1 HMP-MLTR-00001 and HMP-MLTR-00002 3
3.2 HMP-BBLR-00006 and HMP-BBLR-00013 3
3.3 HOP-FCLR-00001 through HOP-FCLR-00004 4
3.4 HMP-ALFT-00001 through HMP-ALFT-00004 4

Tables

Table 1 Associated Instruments for HLW Melters 5

Figures

Figure 1 Typical Temperature Averaging of a Melter Plenum 8
Figure 2 Typical Glass Pool Level and Density 9
Figure 3 Typical Plenum Differential Pressure 10
Figure 4 Typical IR Cameras 11
Figure 5 Typical Air Lift Valves 12

Glossary

Control system	Refers to electronic processors that perform regulatory and logical control functions necessary for normal plant operation
High-high	Refers to a notification in the control system that is activated when the applicable variable reaches a point that is significantly higher than that expected during normal operation
Low-low	Refers to a notification in the control system that is activated when the applicable variable reaches a point that is significantly lower than that expected during normal operation

3 Description

The HLW HMP system components and ancillary equipment that pertain to instrumentation and are included in the dangerous waste permit are the following:

HMP-MLTR-00001	HLW Melter 1
HMP-MLTR-00002	HLW Melter 2
HMP-BBLR-00006	Melter 1 Level Detector
HMP-BBLR-00013	Melter 2 Level Detector
HOP-FCLR-00001	Melter 1 Film Cooler
HOP-FCLR-00002	Melter 2 Film Cooler
HOP-FCLR-00003	Melter 1 Standby Offgas Insert
HOP-FCLR-00004	Melter 2 Standby Offgas Insert
HMP-ALFT-00001	Melter 1 Air Lift Lance
HMP-ALFT-00002	Melter 1 Air Lift Lance
HMP-ALFT-00003	Melter 2 Air Lift Lance
HMP-ALFT-00004	Melter 2 Air Lift Lance

3.1 HMP-MLTR-00001 and HMP-MLTR-00002

The high-level waste (HLW) melters receive a blend of HLW concentrate and glass former additives from the melter feed process (HFP) system. The melters are fed via air displacement slurry (ADS) pumps. The melters convert the feed into molten glass and deliver it to stainless steel canisters. The pour spout connects the melter discharge chamber to the HLW canister. After the glass is transferred into the canister, it cools to form a durable glass waste form. Immobilized high-level waste (IHLW) is the resulting product (glass plus canister).

The feed slurry is transferred using two feed pumps, each supplying a separate feed nozzle on the melter. The feed slurry will fall from the feed nozzles, which are located in the melter lid, onto the molten glass surface within the melter. The feed material will form a distinct layer, often referred to as the "cold cap," on the surface of the glass pool. This system is also equipped to flush the feed lines with demineralized water, to clean the feed lines and to establish the cold cap prior to transferring waste. This is referred to as melter pre-feeding.

The melters are equipped with several plenum thermocouples, used primarily to determine the coverage of the cold cap. The plenum temperatures are averaged to a single melter plenum temperature. If this temperature falls below acceptable limits pre-feeding to the melter will be terminated. See figure 1 for more details on melter plenum temperature.

3.2 HMP-BBLR-00006 and HMP-BBLR-00013

The melter glass level detector functions using three gas purged probes penetrating the glass pool to different depths. By measuring the differential pressure between each of the legs the density and level of the glass pool are calculated. If the level rises above acceptable limits the control system will alarm and terminate slurry feeding. Glass discharge will be terminated if the glass pool level falls below acceptable limits. Operators will be alerted to the low level condition. See figure 2 for details on melter level detection.

Table 1 Associated Instruments for HLW Melters

P&ID	Monitoring or Control Parameter	Type of instrument/control device	Instrument/ control device tag number
24590-HLW-M6-HMP-00004	Melter 1 plenum temperature, 62"	Temperature Element Temperature Transmitter Temperature Indicator Temperature Element Temperature Transmitter Temperature Indicator	TE-0920A* TT-0920A* TI-0920A* Or TE-0920C* TT-0921A* TI-0920C*
24590-HLW-M6-HMP-00004	Melter 1 plenum temperature, 59"	Temperature Element Temperature Transmitter Temperature Indicator Temperature Element Temperature Transmitter Temperature Indicator	TE-0920B* TT-920A* TI-0920B* Or TE-920D* TT-0921A* TI-0920D*
24590-HLW-M6-HMP-20004	Melter 2 plenum temperature, 62"	Temperature Element Temperature Transmitter Temperature Indicator Temperature Element Temperature Transmitter Temperature Indicator	TE-2920A* TT-2920A* TI-2920A* Or TE-2920C* TT-2921A* TI-2920C*
24590-HLW-M6-HMP-20004	Melter 2 plenum temperature, 59"	Temperature Element Temperature Transmitter Temperature Indicator	TE-2920B* TT-2920A* TI-2920B*

24590-HLW-M6-HMP-00008	Melter 1 West canister level	Level Element (IR Camera) Level Transmitter Level Indication	LE-0816 LT-0816 LI-0816B
24590-HLW-M6-HMP-00007	Melter 1 West Discharge Air Lift	Valve Control On/Off Valve	YC-0761 YV-0761
24590-HLW-M6-HMP-00008	Melter 1 East canister level	Level Element (IR Camera) Level Transmitter Level Indication	LE-0820 LT-0820 LI-0820B
24590-HLW-M6-HMP-00006	Melter 1 East Discharge Air Lift	Valve Control On/Off Valve	YC-0644 YV-0644
24590-HLW-M6-HMP-20008	Melter 2 West canister level	Level Element (IR Camera) Level Transmitter Level Indication	LE-2816 LT-2816 LI-2816B
24590-HLW-M6-HMP-20007	Melter 2 West Discharge Air Lift	Valve Control On/Off Valve	YC-2761 YV-2761
24590-HLW-M6-HMP-20008	Melter 2 East canister level	Level Element (IR Camera) Level Transmitter Level Indication	LE-2820 LT-2820 LI-2820B
24590-HLW-M6-HMP-20006	Melter 2East Discharge Air Lift	Valve Control On/Off Valve	YC-2664 YV-2664

*These instrument sets are duplicates. Only one instrument set is required to remain functioning during waste feed operations.

Figure 2 Typical Glass Pool Level and Density

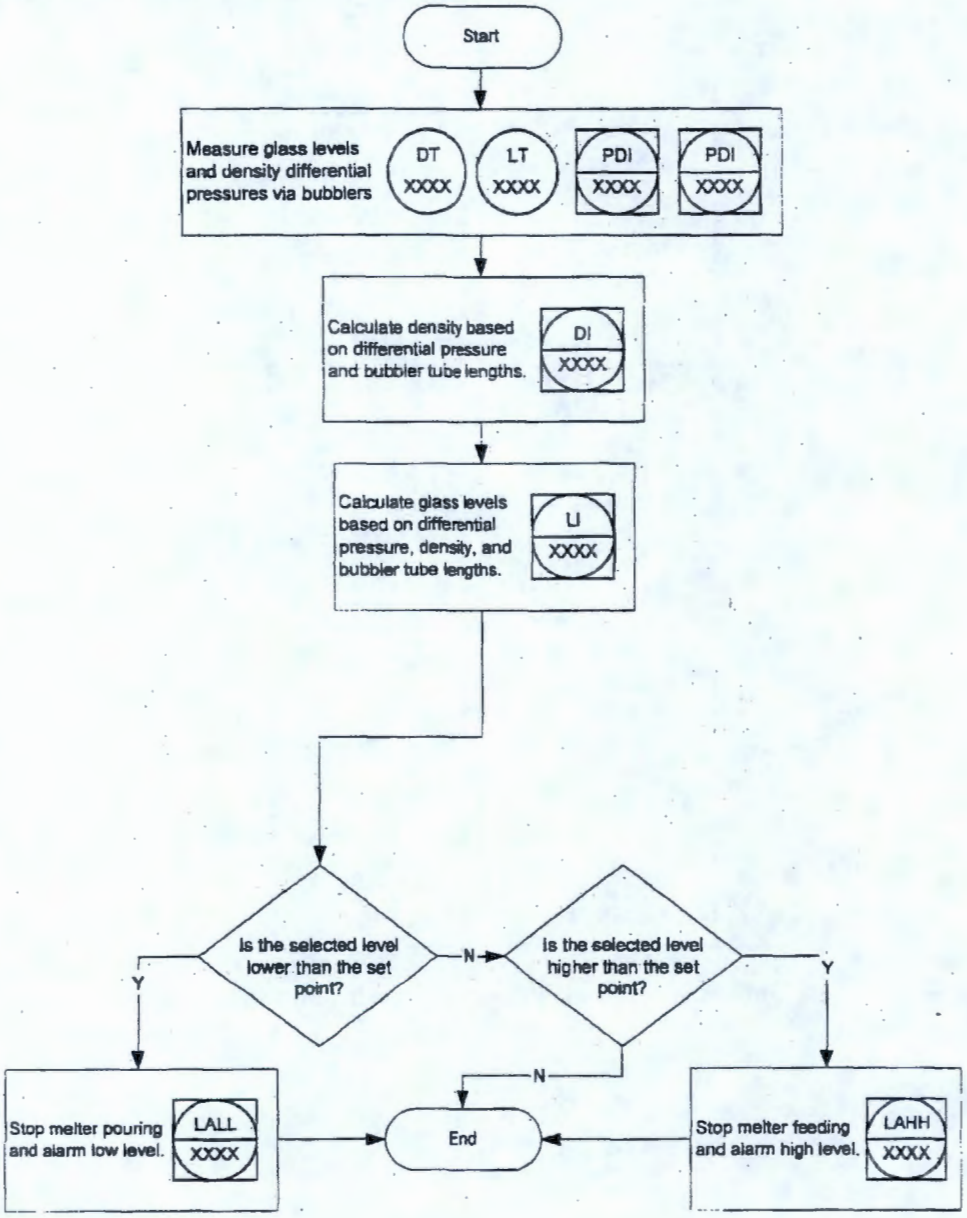

Figure 4 Typical IR Cameras

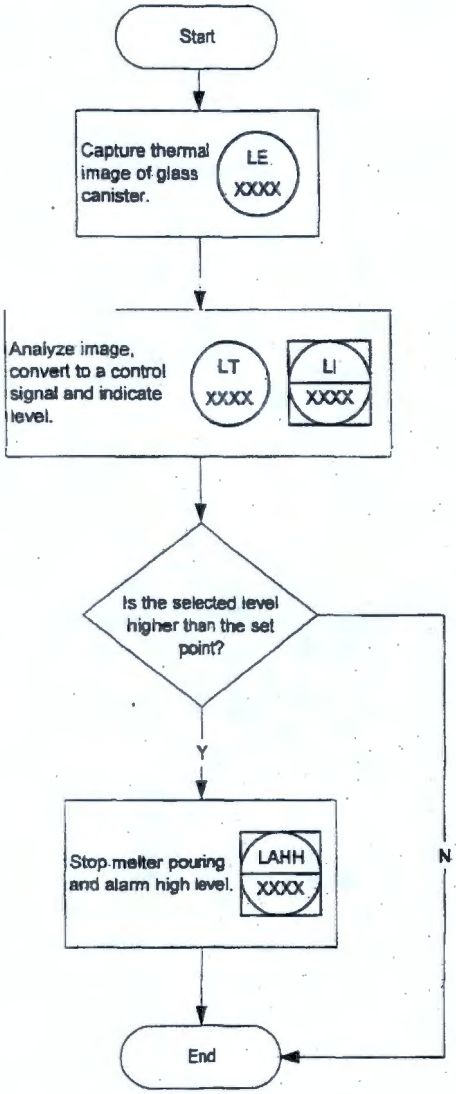

WASHINGTON STATE DEPARTMENT OF ECOLOGY

Washington State Department of Ecology
Nuclear Waste Program
Hanford Project

Document Receipt Verification

ADDRESSEE: JANE A. HEDGES
RECEIVER SIGNATURE: Andrea Adams
DATE/TIME DELIVERED: Tuesday, April 13, 2010 1:20 PM
DOCUMENT TITLE: **10-ESQ-101** **SUBMITTAL OF HANFORD FACILITY RESOURCE CONSERVATION AND RECOVERY ACT (RCRA) PERMIT MODIFICATION NOTIFICATION FORM 24590-HLW-PCN-ENV-10-001**

Quarter Ending March 31, 2010 24590-PTF-PCN-ENV-05-028

Hanford Facility RCRA Permit Modification Notification Form

Part III, Operating Unit 10

Waste Treatment and Immobilization Plant

Index

Page 2 of 5: Hanford Facility RCRA Permit, Part III, Operating Unit 10, Waste Treatment and Immobilization Plant
Update Equipment Assembly Drawings for HLP-VSL-00022, HLP-VSL-00027A and -00027B, and HLP-VSL-00028 in Appendix 8.6 of the Dangerous Waste Permit

Submitted by Co-Operator:

D. M. Busche 1/4/10
D. M. Busche Date

Reviewed by ORP Program Office:

G. A. Girard 1/29/10
G. A. Girard Date

Quarter Ending March 31, 2010 24590-PTF-PCN-ENV-05-028

Hanford Facility RCRA Permit Modification Notification Form	
Unit: **Waste Treatment and Immobilization Plant**	Permit Part: **Part III, Operating Unit 10**

Description of Modification:

The purpose of this Class 1 prime modification is to update the Equipment Assembly Drawings for HLP-VSL-00022, HLP-VSL-00027A and -00027B, and HLP-VSL-00028 in Appendix 8.6.

The following Equipment Assembly Drawings are submitted to replace the permitted drawings currently in Appendix 8.6.

Appendix 8.6			
Replace:	24590-PTF-MV-HLP-P0003, Rev. 0	With:	24590-PTF-MV-HLP-00003, Rev. 2
	24590-PTF-MV-HLP-P0004, Rev. 1		24590-PTF-MV-HLP-00004, Rev. 2 24590-PTF-MV-HLP-00012, Rev. 0 24590-PTF-MV-HLP-00013, Rev. 0
	24590-PTF-MV-HLP-P0005, Rev. 0		24590-PTF-MV-HLP-00005, Rev. 2 24590-PTF-MV-HLP-00010, Rev. 0 24590-PTF-MV-HLP-00011, Rev. 0
	24590-PTF-MV-HLP-P0006, Rev. 0		24590-PTF-MV-HLP-00006, Rev. 2 24590-PTF-MV-HLP-00009, Rev. 0 24590-PTF-MV-HLP-00011, Rev. 0

The referenced equipment assembly drawings (24590-PTF-MV-HLP-P0003, 24590-PTF-MV-HLP-P0004, 24590-PTF-MV-HLP-P0005 and 24590-PTF-MV-HLP-P0006) have been revised. The revisions incorporate changes provided in applicable document change forms (e.g., DCN, SCN, SDDR, FCN, FCR, etc.) and changes associated with the resolution to comments on change documents since the issuance of the last revision of the permitted drawings. New equipment assembly drawings referenced above (24590-PTF-MV-HLP-00009, 24590-PTF-MV-HLP-00010, 24590-PTF-MV-HLP-00011, 24590-PTF-MV-HLP-00012, and 24590-PTF-MV-HLP-00013) supplement information contained on 24590-PTF-MV-HLP-00004, 24590-PTF-MV-HLP-00005 and 24590-PTF-MV-HLP-00006.

This modification requests Ecology approval and incorporation into the permit, the specific changes in 24590-PTF-MV-HLP-00003 through 24590-PTF-MV-HLP-00006 that are indicated by notes, clouds, and revision triangles. In addition, this modification requests Ecology approval and incorporation into the permit equipment assembly drawings 24590-PTF-MV-HLP-00009 through 24590-PTF-MV-HLP-00013. Revisions and the new drawings are the result of ongoing design changes. The following identifies the significant types of changes to 24590-PTF-MV-HLP-00003 through 24590-PTF-MV-HLP-00006.

24590-PTF-MV-HLP-00003

- Added note 5

24590-PTF-MV-HLP-00004

- Revised and expanded general notes
- Holds are no longer indicated
- Expanded the nozzle schedule
- Updated the table of reference drawings
- Removed cooling jacket detail
- The plan view has been updated, showing additional nozzles and dimensions
- The ring beam detail has been moved to 24590-PTF-MV-HLP-00013
- Moved vessel elevation view to drawings 24590-PTF-MV-HLP-00012 and 24590-PTF-MV-HLP-

00013 and added details

- Section view indicators have been added, and section views are shown on drawings 24590-PTF-MV-HLP-00012 and 24590-PTF-MV-HLP-00013
- Additional vessel details have been added by drawings 24590-PTF-MV-HLP-00012 and 24590-PTF-MV-HLP-00013

24590-PTF-MV-HLP-00005

- Revised and expanded general notes
- Holds are no longer indicated
- Expanded the nozzle schedule
- Updated the table of reference drawings
- Removed cooling jacket detail
- The plan view has been updated, showing additional nozzles and dimensions
- Section B-B has been removed
- Detail-1 has been removed, and is now shown on 24590-PTF-MV-HLP-00011
- Detail-2 has been removed
- The ring beam detail has been moved to 24590-PTF-MV-HLP-00011
- Moved vessel elevation and section view to drawings 24590-PTF-MV-HLP-00010 and 24590-PTF-MV-HLP-00011 and added details
- Section view indicators have been added, and section views are shown on 24590-PTF-MV-HLP-00010 and 24590-PTF-MV-HLP-00011
- Additional vessel details have been added by drawings 24590-PTF-MV-HLP-00010 and 24590-PTF-MV-HLP-00011

24590-PTF-MV-HLP-00006

- Revised and expanded general notes
- Holds are no longer indicated
- Expanded the nozzle schedule
- Updated the table of reference drawings
- Removed cooling jacket detail
- The plan view has been updated, showing additional nozzles and dimensions
- The ring beam detail has been moved to 24590-PTF-MV-HLP-00011
- Moved vessel elevation and section view to drawings 24590-PTF-MV-HLP-00009 and 24590-PTF-MV-HLP-00011 and added details
- Section view indicators have been added, and section views are shown on 24590-PTF-MV-HLP-00010 and 24590-PTF-MV-HLP-00011
- Additional vessel details have been added by drawings 24590-PTF-MV-HLP-00009 and 24590-PTF-MV-HLP-00011

Additional detail updating the design of HLP-VSL-00028 can be found on mechanical drawings 24590-PTF-MV-HLP-00012 and 24590-PTF-MV-HLP-00013. Additional detail updating the design of HLP-VSL-00027A can be found on mechanical drawings 24590-PTF-MV-HLP-00009 and 24590-PTF-MV-HLP-00011. Additional detail updating the design of HLP-VSL-00027B can be found on mechanical drawings 24590-PTF-MV-HLP-00010 and 24590-PTF-MV-HLP-00011.

Quarter Ending March 31, 2010 24590-PTF-PCN-ENV-05-028

The following is a list of outstanding change documents that have not been incorporated into this modification:

24590-PTF-MV-HLP-00003

- 24590-PTF-MVN-HLP-00001
- 24590-PTF-MVN-HLP-00006
- 24590-PTF-MVN-HLP-00009
- 24590-PTF-MVN-HLP-00036
- 24590-PTF-MVN-HLP-00043
- 24590-WTP-M6N-M80T-00002
- 24590-WTP-M6N-M80T-00003
- 24590-WTP-SDDR-PROC-05-00272

24590-PTF-MV-HLP-00004

- 24590-PTF-MVN-HLP-00010
- 24590-PTF-MVN-HLP-00018
- 24590-PTF-MVN-HLP-00031
- 24590-PTF-MVN-HLP-00044
- 24590-PTF-MVN-HLP-00047
- 24590-PTF-MVN-HLP-00048
- 24590-PTF-MVN-HLP-00049
- 24590-WTP-M6N-M80T-00003

24590-PTF-MV-HLP-00005

- 24590-PTF-MVN-HLP-00011
- 24590-PTF-MVN-HLP-00019
- 24590-PTF-MVN-HLP-00029
- 24590-PTF-MVN-HLP-00046
- 24590-PTF-MVN-HLP-00048
- 24590-PTF-MVN-HLP-00049
- 24590-WTP-M6N-M80T-00003
- 24590-WTP-SDDR-M-06-00284

24590-PTF-MV-HLP-00006

- 24590-PTF-MVN-HLP-00012
- 24590-PTF-MVN-HLP-00020
- 24590-PTF-MVN-HLP-00026
- 24590-PTF-MVN-HLP-00045
- 24590-PTF-MVN-HLP-00048
- 24590-WTP-M6N-M80T-00003

24590-PTF-MV-HLP-00009

- 24590-PTF-MVN-HLP-00013
- 24590-PTF-MVN-HLP-00021
- 24590-PTF-MVN-HLP-00027
- 24590-WTP-M6N-M80T-00002

Quarter Ending March 31, 2010 24590-PTF-PCN-ENV-05-028

24590-PTF-MV-HLP-00010
- 24590-PTF-MVN-HLP-00014
- 24590-PTF-MVN-HLP-00022
- 24590-PTF-MVN-HLP-00030

24590-PTF-MV-HLP-00011
- 24590-PTF-MVN-HLP-00015
- 24590-PTF-MVN-HLP-00023
- 24590-PTF-MVN-HLP-00028
- 24590-PTF-MVN-HLP-00049

24590-PTF-MV-HLP-00012
- 24590-PTF-MVN-HLP-00016
- 24590-PTF-MVN-HLP-00024
- 24590-PTF-MVN-HLP-00032
- 24590-WTP-M6N-M80T-00002

24590-PTF-MV-HLP-00013
- 24590-PTF-MVN-HLP-00017
- 24590-PTF-MVN-HLP-00025
- 24590-PTF-MVN-HLP-00033
- 24590-PTF-MVN-HLP-00049
- 24590-WTP-M6N-M80T-00002

WAC 173-303-830 Modification Class:	Class 1	Class [1]1	Class 2	Class 3
Please mark the Modification Class:		X		

Enter relevant WAC 173-303-830, Appendix I Modification citation number:

Enter wording of WAC 173-303-830, Appendix I Modification citation:

In accordance with WAC 173-303-830(4)(d)(i), this modification notification is requested to be reviewed and approved as a Class [1]1 modification. WAC 173-303-830(4)(d)(ii)(A) states, "Class 1 modifications apply to minor changes that keep the permit current with routine changes to the facility or its operation. These changes do not substantially alter the permit conditions or reduce the capacity of the facility to protect human health or the environment. In the case of Class 1 modifications, the director may require prior approval."

Modification Approved/Concur: [X] Yes [ ] Denied (state reason below)

Reason for denial:

Reviewed by Ecology:

K. Elsethagen 4-15-2010

Kelly Elsethagen Date

10-ESQ-009 Drawings:

24590-PTF-MV-HLP-00003 - Rev 2

24590-PTF-MV-HLP-00004 - Rev 2

24590-PTF-MV-HLP-00005 - Rev 2

24590-PTF-MV-HLP-00006 - Rev 2

24590-PTF-MV-HLP-00009 - Rev 0

24590-PTF-MV-HLP-00010 - Rev 0

24590-PTF-MV-HLP-00011- Rev 0

24590-PTF-MV-HLP-00012 - Rev 0

24590-PTF-MV-HLP-00013 - Rev 0

24590-PTF-MV-HLP-00003

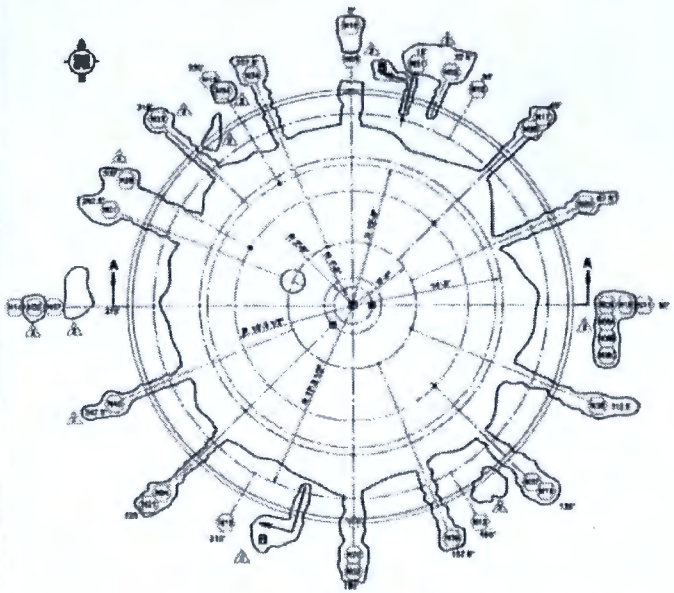

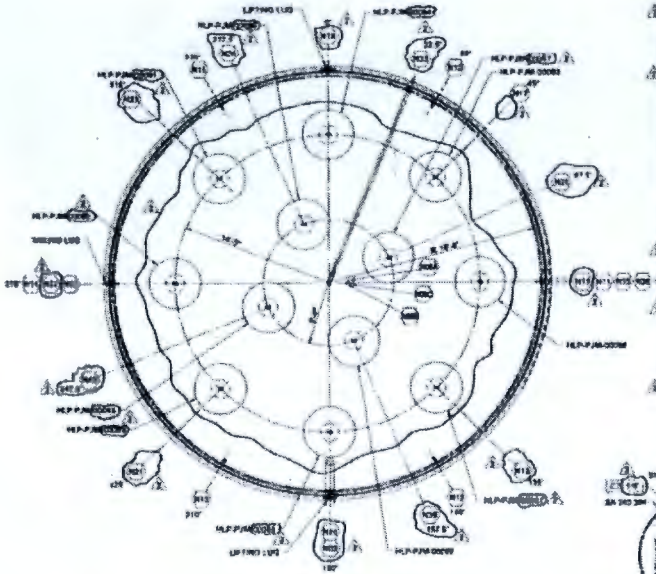

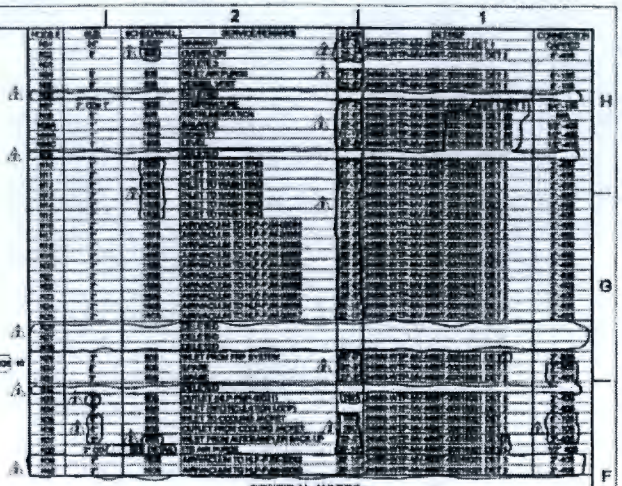

GENERAL NOTES:

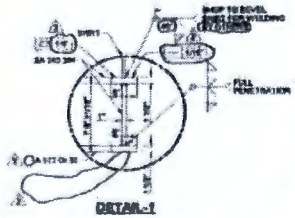

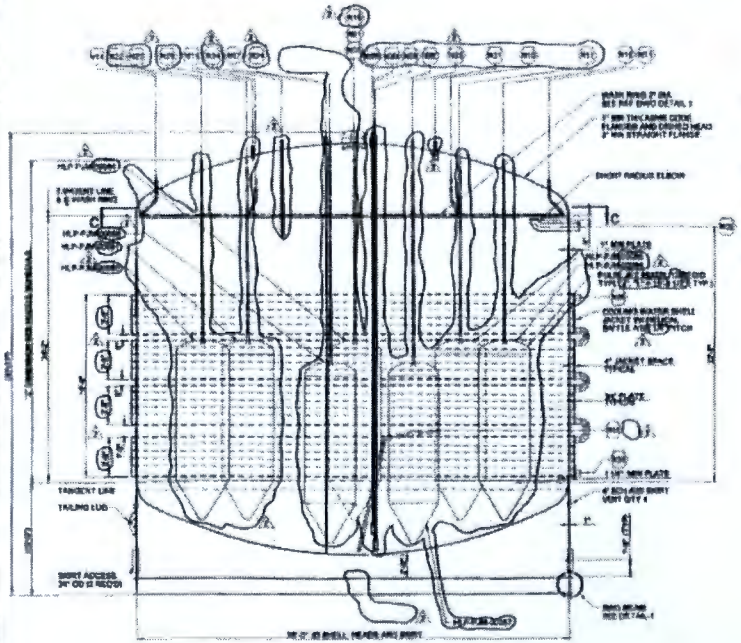

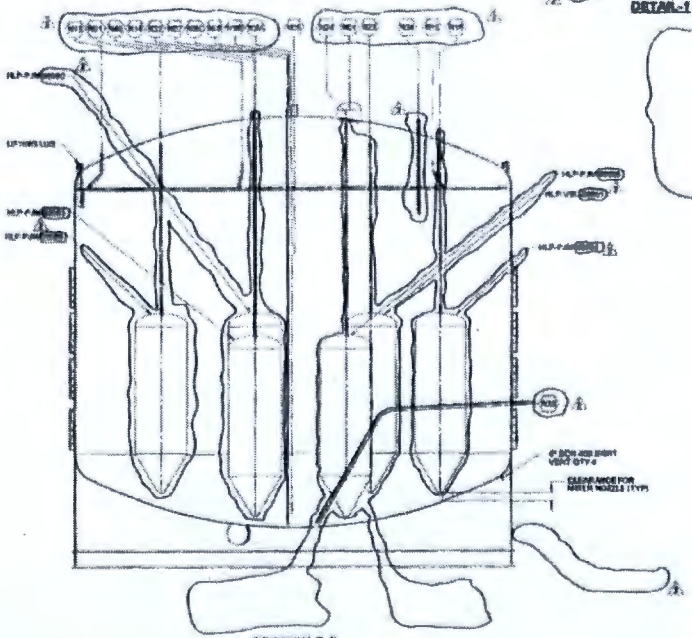

HOLDS:

EQUIPMENT ASSEMBLY
HLW FEED RECEIPT VESSEL
HLP-VSL-00022

24590-PTF-MV-HLP-00003

GENERAL NOTES:

1. DELETED
2. FOR DISTANCE OF DIP PIPES TO BOTTOM HEAD, USE 3" CLEARANCE UNLESS OTHERWISE SPECIFIED.
3. "3" DIMENSION FOR NOZZLES IS MEASURED FROM CENTERLINE OF NOZZLE FACE.
4. DELETED
5. DELETED
6. DELETED
7. REVISIONS/CHANGES/DELETED:
   a) EXTENSIVE REVISION, CHANGES ARE NOT INDICATED BY CLOUDING.
   b) INCORPORATED 24590-PTF-MVD-HLP-00003
8. PULSE JET MIXER:
   a) MINIMUM PLATE THICKNESS IS 3/16". SELLER TO DESIGN.
   b) ALL WELDS SHALL BE FULL PENETRATION AND SMOOTH.
   c) SELLER SHALL DESIGN SUPPORTS. PULSE JET MIXERS SHALL NOT BE SUPPORTED FROM THE PARENT VESSEL BOTTOM HEAD.
   d) DESIGN TEMPERATURE IS THE SAME AS THE PARENT VESSEL DESIGN PRESSURE AND IS SHOWN IN THE MECHANICAL DATA SHEET.
   e) STIFFENING RINGS AND REINFORCING PADS ARE NOT PERMITTED.
   f) NON-DESTRUCTIVE EXAMINATION SHALL BE AS SPECIFIED FOR THE VESSEL COMPONENT QUALITY LEVEL INDICATED.
9. PREPARE NOZZLE CONNECTIONS PER 24590-WTP-PW-P30T-00001 EXCEPT LEAVE SPARE NOZZLES N0? & N3?.
10. SELLER SHALL PROVIDE AND INSTALL TRUNNION SWIVEL LUG MOUNTING LUGS PER 24590-WTP-MV-M59T-0000?.
11. NOZZLES ARE READ FROM THE CENTER OUTWARD.
12. ALL WELDS OF THE PULSE JET MIXER CLUSTER SHALL BE FULL PENETRATION, ULTRASONICALLY TESTED AND DYE PENETRANT TESTED AS A MINIMUM.
    ALL FULL PENETRATION WELDS OF SUPPORT MEMBERS SHALL BE ULTRASONICALLY TESTED AND DYE PENETRANT TESTED. IF FILLET WELDS ARE PERMITTED BY THE BUYER AND ARE NOT READILY ULTRASONICALLY TESTED, THEY MAY BE DYE-PENETRANT TESTED WITH APPROVAL FROM THE BUYER.
13. THE PULSE JET MIXER CLUSTER SHALL BE DESIGNED FOR THE EXTERNAL PRESSURE OF THE PARENT VESSEL STATIC HEAD. THE PJM CLUSTER FILL SHALL NOT BE CONSIDERED AS SUPPORT FOR EXTERNAL PRESSURE.
14. THE PULSE JET MIXER CLUSTER SHALL BE HYDROSTATICALLY TESTED AT ATMOSPHERIC PRESSURE.

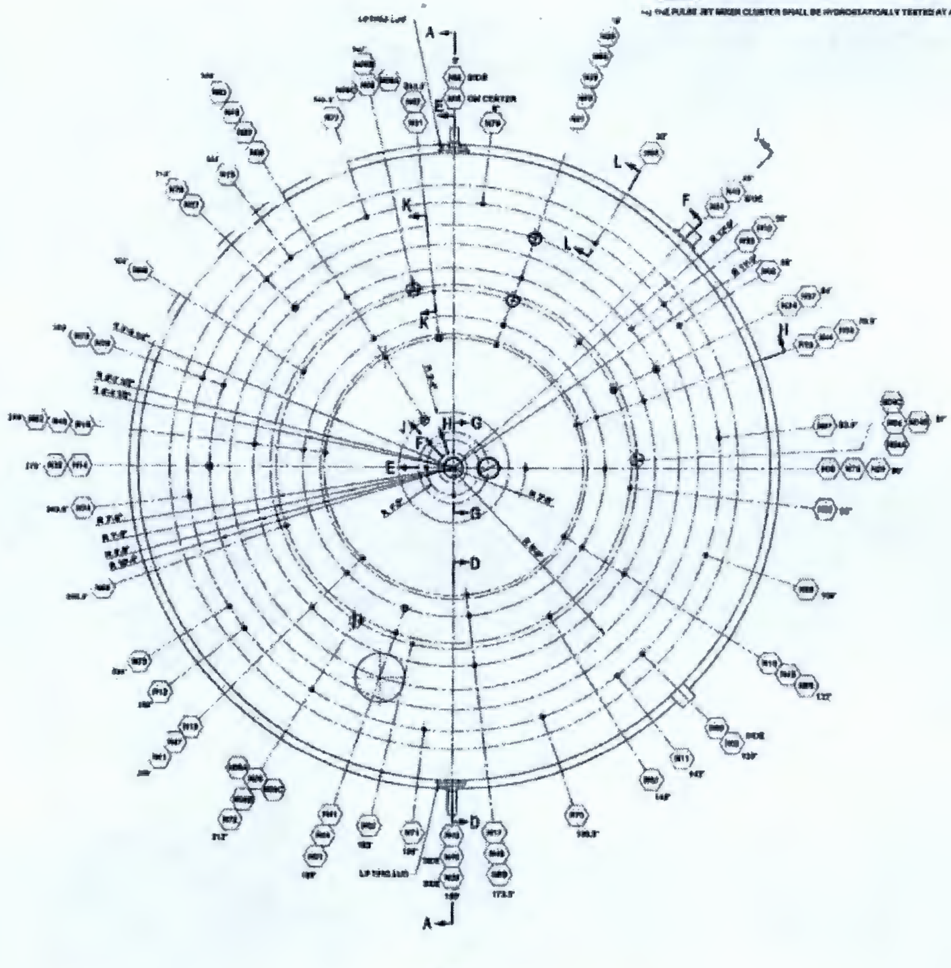

PLAN VIEW

THIS DRAWING TO BE READ IN CONJUNCTION WITH MECHANICAL SYSTEMS DATA SHEET 24590-PTF-MVD-HLP-00003

REV	DESCRIPTION
2	REVISED PER NOTE 7
1	REVISED AS MARKED, SEE NOTE 8
0	ISSUED FOR PURCHASE

REVISION HISTORY

Q

RIVER PROTECTION PROJECT
WASTE TREATMENT PLANT
2435 STEVENS CENTER PLACE
RICHLAND, WA 99352

EQUIPMENT ASSEMBLY
HLW FEED BLEND VESSEL
HLP-VSL-00028

SCALE NONE

24590-PTF-MV-HLP-00004 REV 2

24590-PTF-MV-HLP-00006

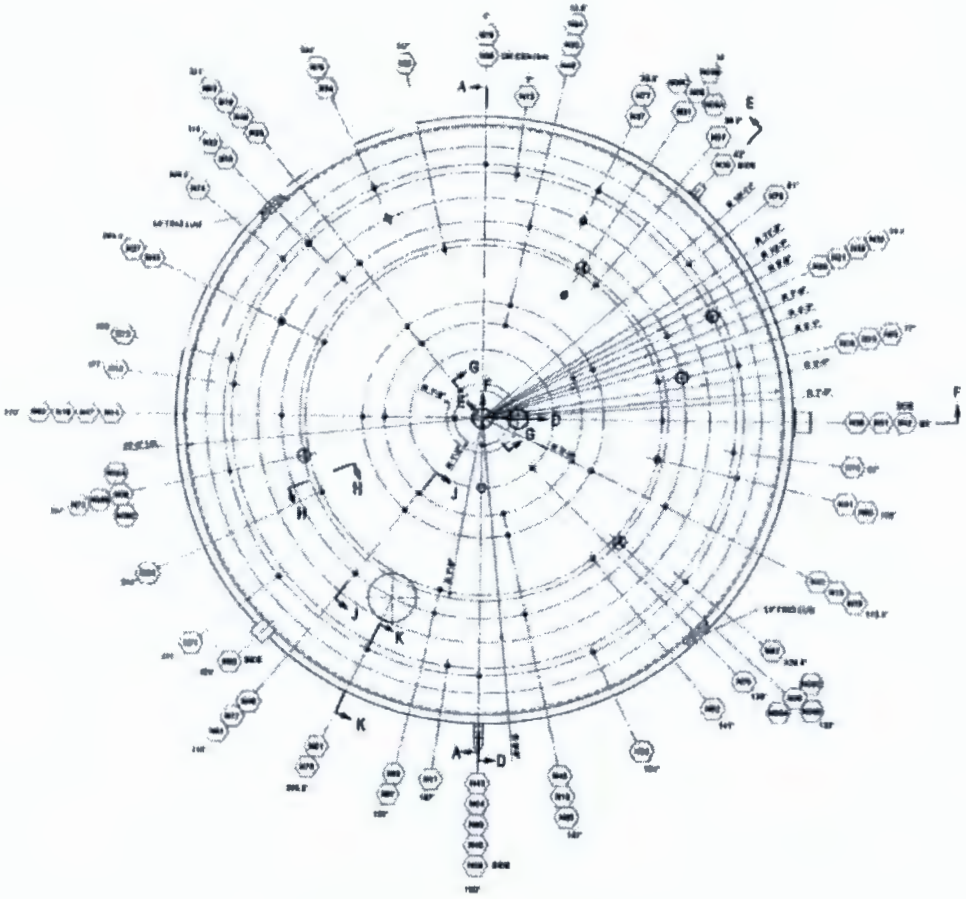

PLAN VIEW

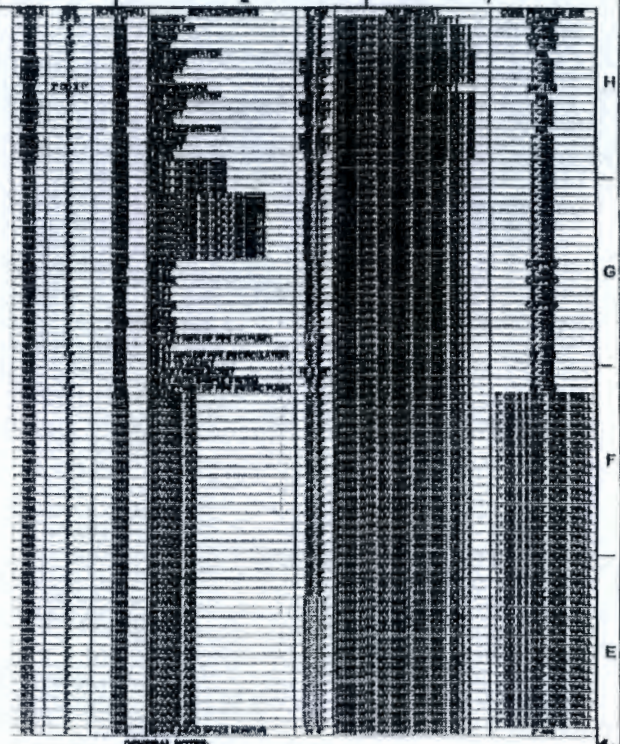

GENERAL NOTES:

1. DELETED
2. FOR DISTANCE OF ZIP PIPES TO BOTTOM HEAD, SEE 2" USE/WARNING NOZZLE DETAIL/WARNING SPECIFIED
3. "D" DIMENSION FOR NOZZLES IS MEASURED FROM CENTERLINE OF NOZZLE FACE.
4. DELETED
5. DELETED
6. DELETED
7. REVISIONS (DELETED)
   a. EXTERNAL REVISION CHANGES ARE NOT SHOWN THEREON (S DRAWING.
   b. INCORPORATED 24590-PTF-MVH-LP-00004
8. [illegible] JET NOZZLE
   a. MINIMUM PLATE THICKNESS IS 0.5"P. REFER TO DESIGN
   b. ALL WELDS SHALL BE FULL PENETRATION AND SMOOTH
   c. WELDED SHELL OF BOSS SUPPORTS PULSE JET NOZZLE SHALL NOT BE SUPPORTED FROM THE PARENT VESSEL BOTTOM HEAD.
   d. DESIGN TEMPERATURE IS THE SAME AS THE PARENT VESSEL DESIGN PRESSURE AND IS SHOWN IN THE MECHANICAL DATA SHEET.
   e. FLAT PLATE NOZZLE AND REINFORCED PADS ARE NOT PERMITTED.
   f. NON DESTRUCTIVE EXAMINATION SHALL BE AS SPECIFIED FOR THE VESSEL COMPONENT QUALITY LEVEL.
9. PREPARE NOZZLE CONNECTIONS PER 24590-PTF-PN-PTF-00004
10. WELDER SHALL PROVIDE AND INSTALL TEFLON SWIVEL LAG MOUNTING LUGS PER 24590-PTF-MV-MHH-00003
11. NOZZLES ARE READ FROM THE CENTER OUTWARD
12. ALL WELDS OF THE PULSE JET NOZZLE CLUSTER SHALL BE FULL PENETRATION. UT TRANSDUCERS TESTED AND DYE PENETRANT TESTED AS A MINIMUM.
    ALL FULL PENETRATION WELDS OF SUPPORTS VERTICAL SHALL BE ULTRASONICALLY TESTED AND DYE PENETRANT TESTED. IF FULLY WELDED AND PENETRATED ON THE INSIDE AND NOT READILY ULTRASONICALLY TESTED, THEY MAY BE DYE PENETRANT TESTED WITH APPROVAL FROM THE OWNER.
13. THE PULSE JET NOZZLE CLUSTER SHALL BE DESIGNED FOR THE EXTERNAL PRESSURE OF THE PARENT VESSEL STATIC HEAD. THE FAN CLUSTER FULL SHALL NOT BE CONSIDERED AS SUPPORT FOR EXTERNAL PRESSURE.
14. THE PULSE JET NOZZLE CLUSTER SHALL BE HYDROSTATICALLY TESTED AT ATMOSPHERIC PRESSURE.

VESSEL COMPONENT QUALITY LEVELS

COMPONENTS	QUALITY LEVEL
[illegible]	[illegible]
[illegible]	[illegible]
[illegible]	[illegible]
[illegible]	[illegible]
[illegible]	[illegible]
[illegible]	[illegible]

THIS DRAWING TO BE READ IN CONJUNCTION WITH MECHANICAL SYSTEMS DATA SHEET 24590-PTF-MVD-HLP-00006

REVISION HISTORY

REV	DESCRIPTION	CHK	CHKD	APVD	APVD	DATE
1	[illegible]	[illegible]	[illegible]	[illegible]	[illegible]	[illegible]
2	[illegible]	[illegible]	[illegible]	[illegible]	[illegible]	[illegible]
3	[illegible]	[illegible]	[illegible]	[illegible]	[illegible]	[illegible]

Q

RIVER PROTECTION PROJECT
WASTE TREATMENT PLANT
3400 STEVENS CENTER PLACE
RICHLAND, WA 99352

EQUIPMENT ASSEMBLY
HLW LAG STORAGE VESSEL
HLP-VSL-00[illegible]

24590-PTF-MV-HLP-00006

SCALE NONE

REV 2

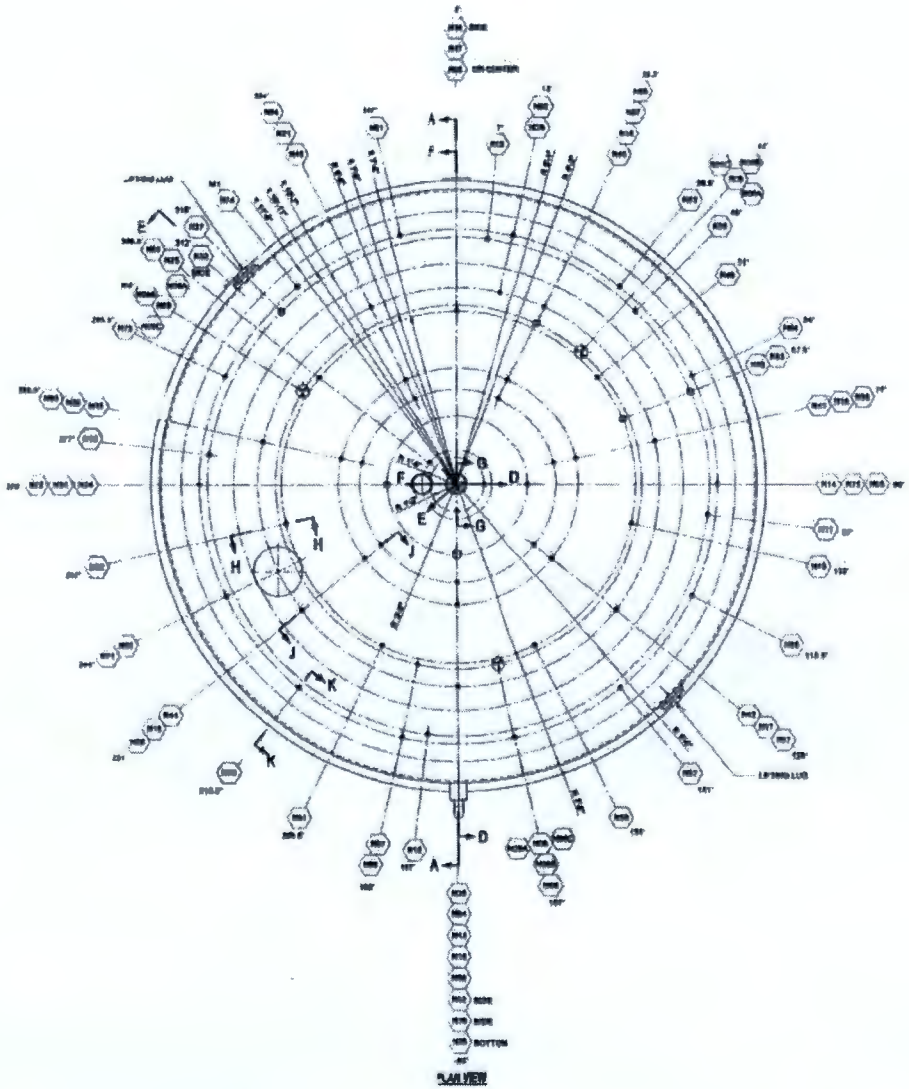

GENERAL NOTES:

1. DELETED
2. ON DISTANCE OF 90° PIPES TO BOTTOM HEAD, USE 2" CLEARANCE UNLESS OTHERWISE SPECIFIED
3. 2" DIMENSION FOR NOZZLES IS MEASURED FROM CENTERLINE OF NOZZLE FACE.
4. DELETED
5. DELETED
6. DELETED
7. REVISED/ADDED/DELETED
   a) EXTENSIVE REVISION, CHANGES ARE NOT INDICATED BY CLOUDING
   b) INCORPORATED 24590-PTF-MVR-HLP-00004
8. PULSE JET MIXER:
   a) MINIMUM PLATE THICKNESS IS 7/16", SELLER TO DESIGN
   b) ALL WELDS SHALL BE FULL PENETRATION AND SMOOTH.
   c) SELLER SHALL DESIGN SUPPORTS. PULSE JET MIXERS SHALL NOT BE SUPPORTED FROM THE PARENT VESSEL BOTTOM HEAD.
   d) DESIGN TEMPERATURE IS THE SAME AS THE PARENT VESSEL DESIGN PRESSURE AND IS SHOWN IN THE MECHANICAL DATA SHEET.
   e) STIFFENING RINGS AND REINFORCING PADS ARE NOT PERMITTED.
   f) NON-DESTRUCTIVE EXAMINATION SHALL BE AS SPECIFIED FOR THE VESSEL COMPONENT QUALITY LEVEL
9. PREPARE NOZZLE CONNECTIONS PER 24590-PTF-PMI-PSR-00001
10. SELLER SHALL PROVIDE AND INSTALL TEDCHW SWIVEL LUG MOUNTING LUGS PER 24590-PTF-MV-M501-00003
11. NOZZLES ARE READ FROM THE CENTER OUTWARD
12. ALL WELDS OF THE PULSE JET MIXER CLUSTER SHALL BE FULL PENETRATION, ULTRASONICALLY TESTED AND DYE-PENETRANT TESTED AS A MINIMUM.
    ALL FULL PENETRATION WELDS OF SUPPORT MEMBERS SHALL BE ULTRASONICALLY TESTED AND DYE PENETRANT TESTED. 2" FILLET WELDS ARE PERMITTED BY THE BUYER AND ARE NOT READILY ULTRASONICALLY TESTED, THEY MAY BE DYE-PENETRANT TESTED WITH APPROVAL FROM THE BUYER.
13. THE PULSE JET MIXER CLUSTER SHALL BE DESIGNED FOR THE EXTERNAL PRESSURE OF THE PARENT VESSEL STATIC HEAD. THE PJM CLUSTER FILL SHALL NOT BE CONSIDERED AS SUPPORT FOR EXTERNAL PRESSURE.
14. THE PULSE JET MIXER CLUSTER SHALL BE HYDROSTATICALLY TESTED AT ATMOSPHERIC PRESSURE.

VESSEL COMPONENT QUALITY LEVELS	
COMPONENTS	QUALITY LEVEL
PARENT VESSEL, MIXER, ALL NOZZLES	Qu1
ALL INTERNAL SUPPORTS	Qu1
PULSE JET MIXERS AND PIPING	Qu1
INSTRUMENTATION	Qu1
WASH RING AND PIPING	Qu
PJM CLUSTER FILL	Qu

THIS DRAWING TO BE READ IN CONJUNCTION WITH MECHANICAL SYSTEMS DATA SHEET 24590-PTF-MVD-HLP-00001

REV	DESCRIPTION	DRN	CHKD	PVRD	APVD	DATE
1	REVISED FOR PURCHASE, REVISED PER NOTE 7					
1	REVISED AS MARKED, SEE NOTE 6					
0	ISSUED FOR PURCHASE					

REVISION HISTORY

RIVER PROTECTION PROJECT
WASTE TREATMENT PLANT
2435 STEVENS CENTER PLACE
RICHLAND, WA 99352

CONTRACT NO. DE-AC27-01RV14136

EQUIPMENT ASSEMBLY
HLW LAG STORAGE VESSEL
HLP-VSL-00027A

DWG NO. 24590-PTF-MV-HLP-00006 REV 2

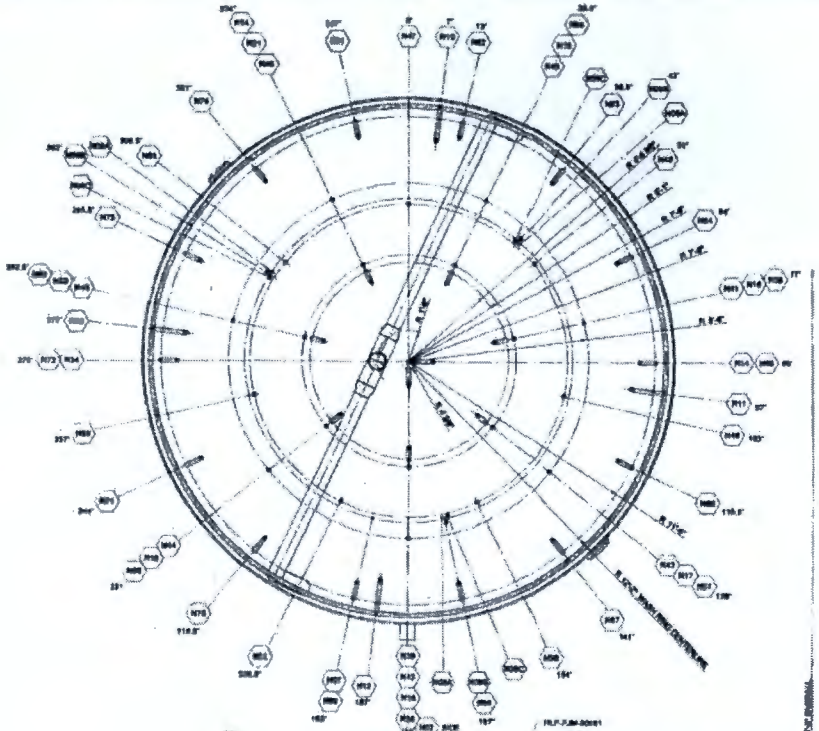

SECTION B-B

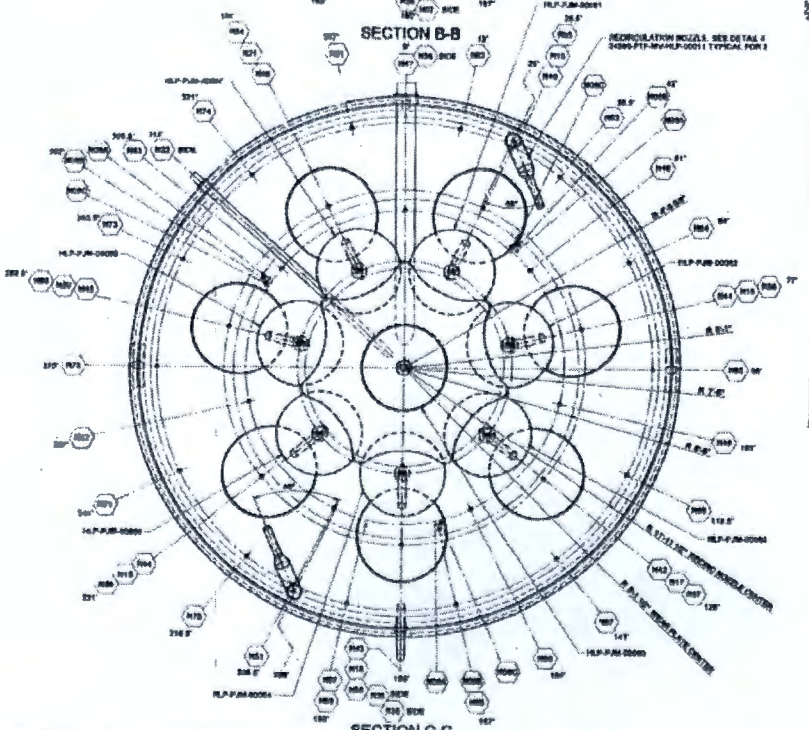

SECTION C-C

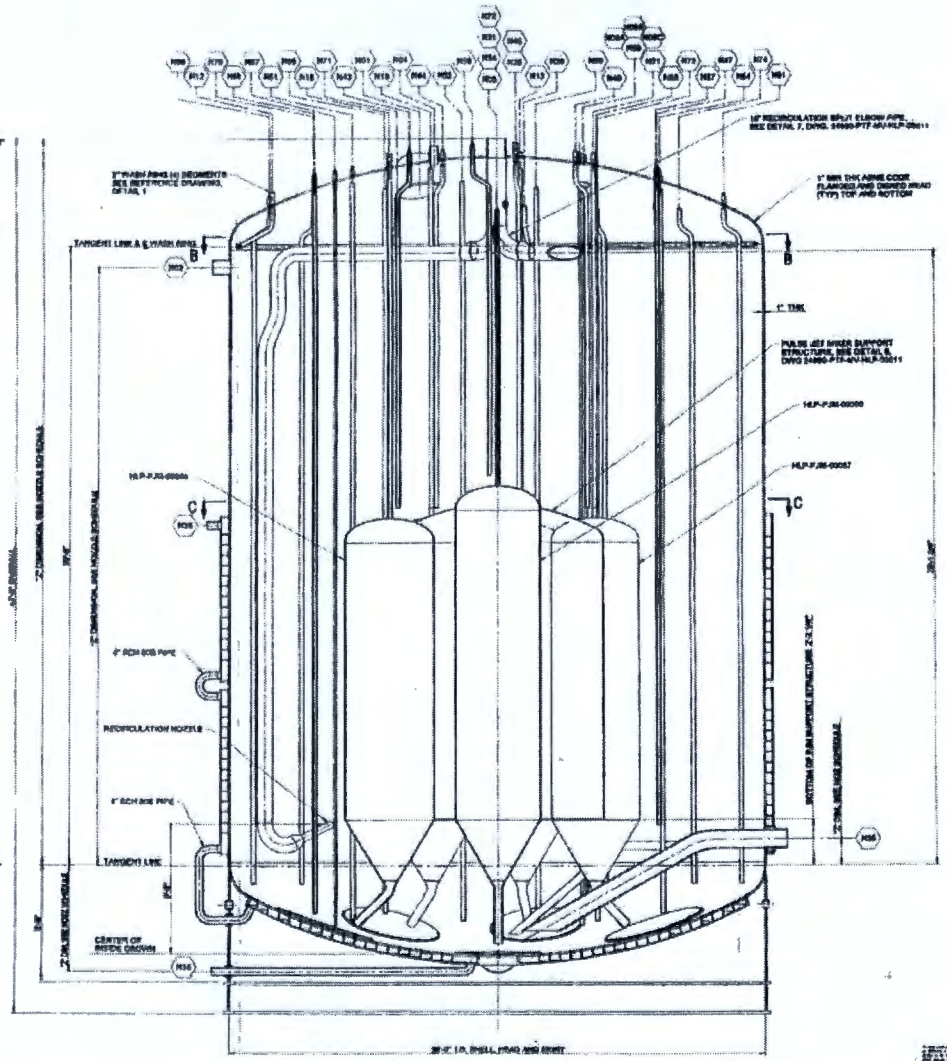

SECTION A-A

EQUIPMENT ASSEMBLY
HLW LAG STORAGE VESSEL
HLP-VSL-00027A

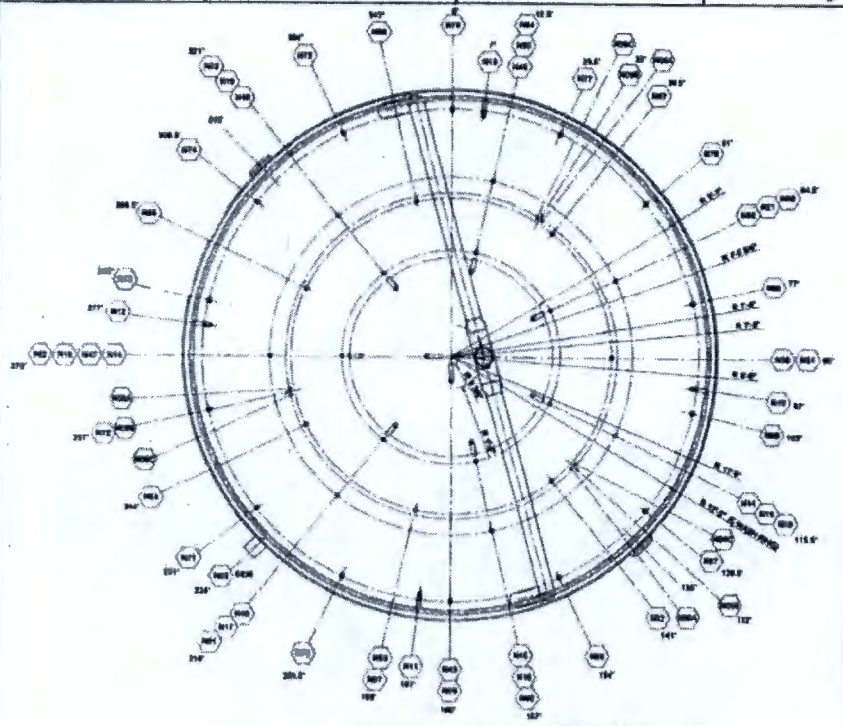

SECTION B-B

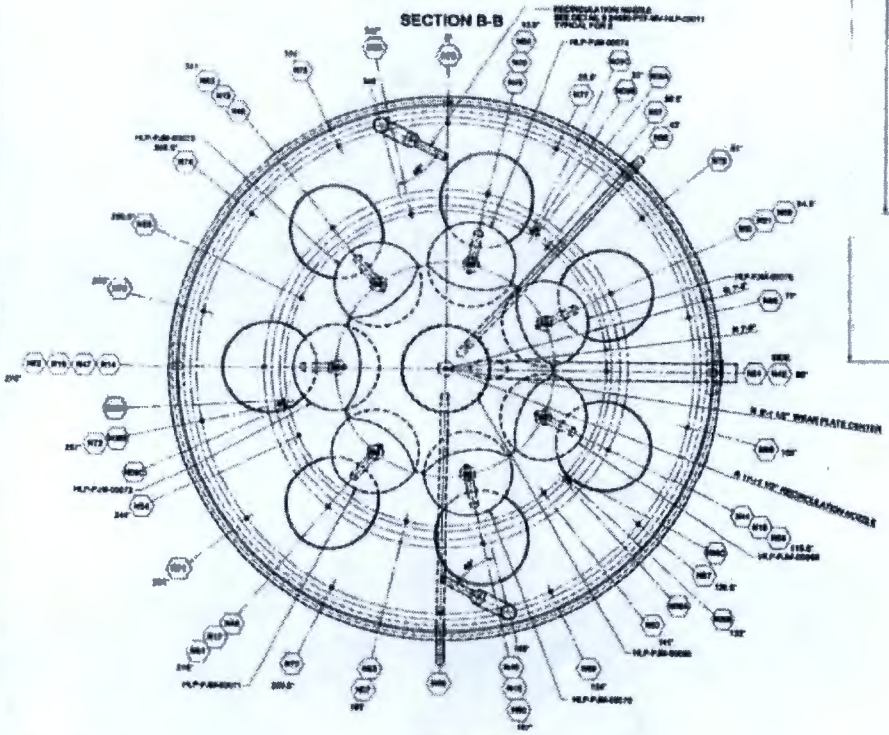

SECTION C-C

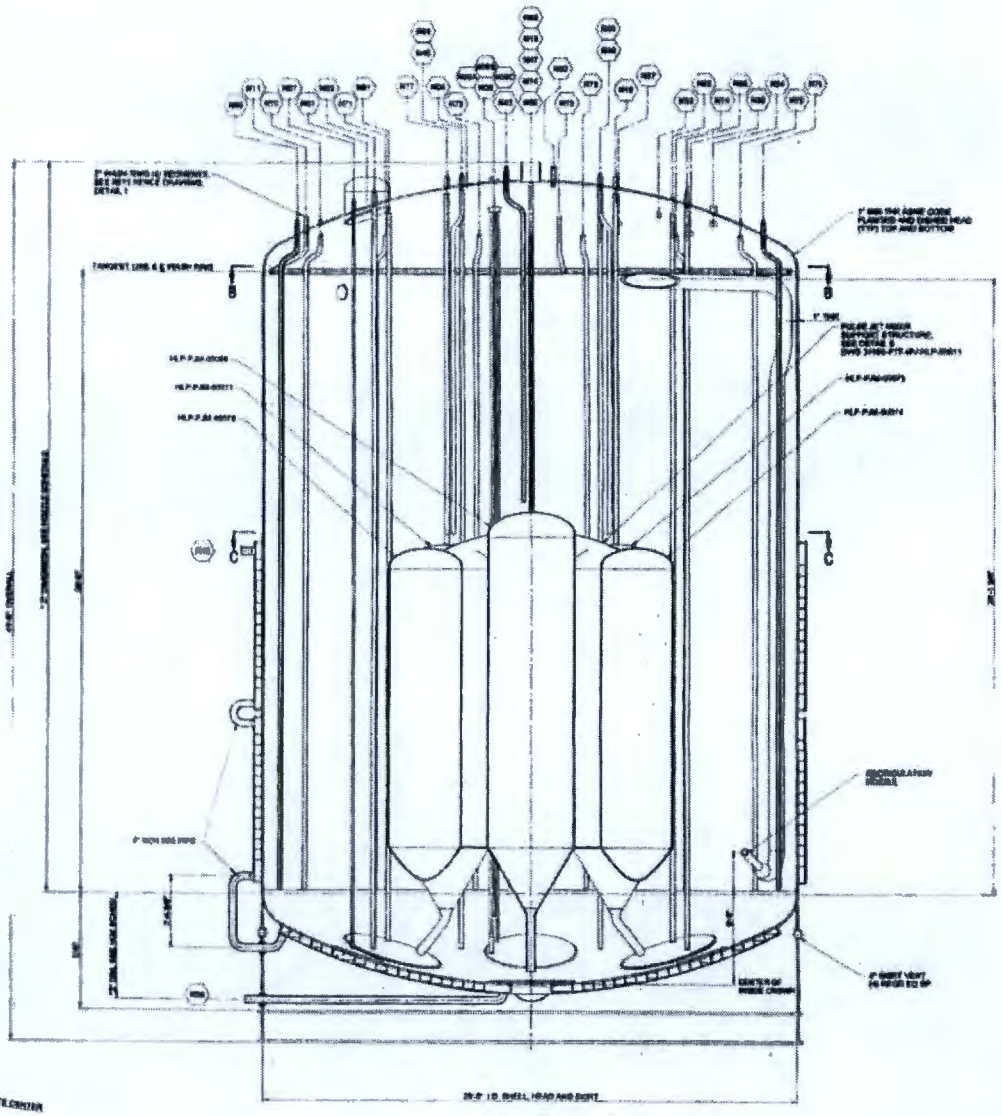

SECTION A-A

EQUIPMENT ASSEMBLY
HLW LAG STORAGE VESSEL
HLP-VSL-00027B

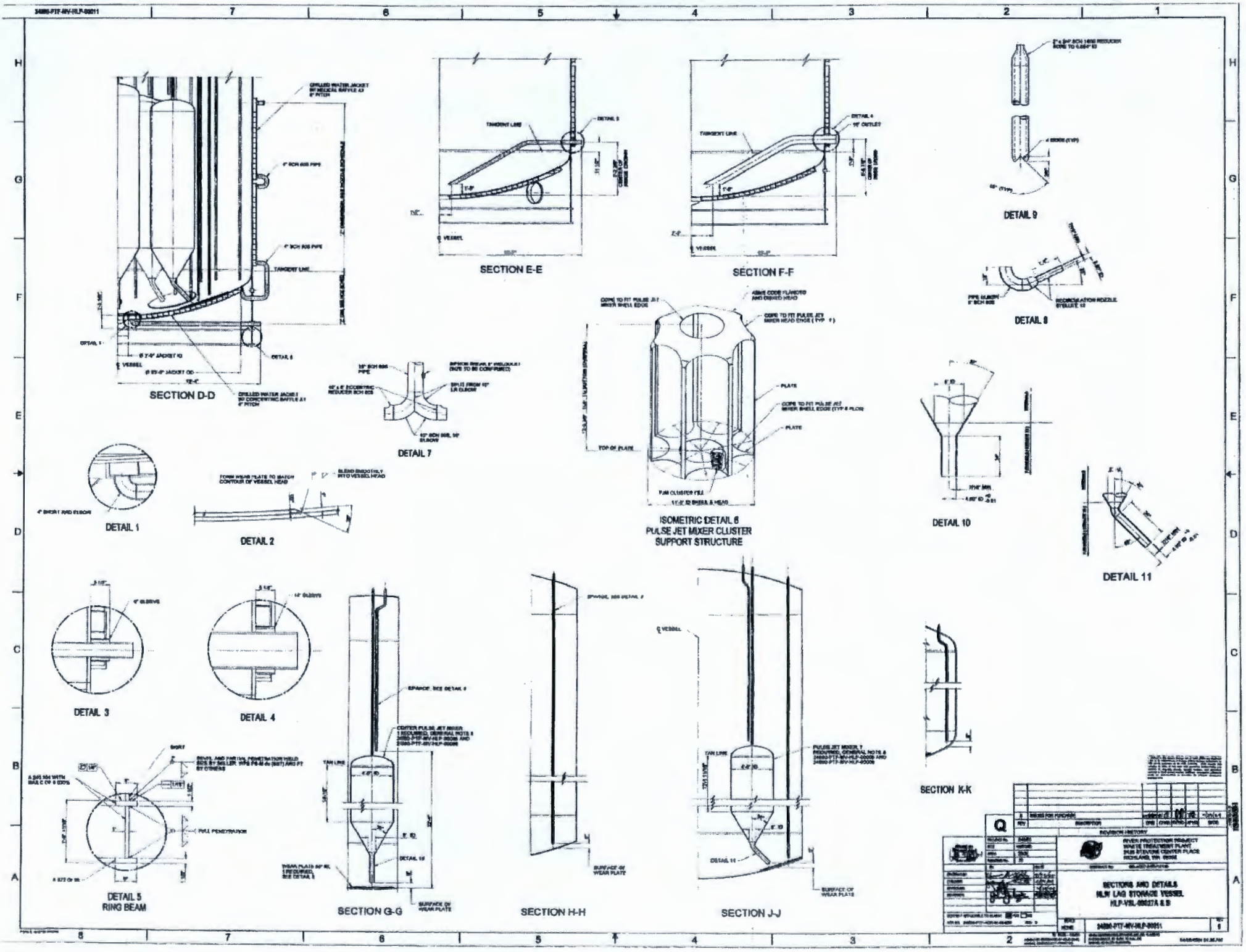
SECTION D-D
SECTION E-E
SECTION F-F
DETAIL 9
DETAIL 8
DETAIL 7
DETAIL 1
DETAIL 2
ISOMETRIC DETAIL 6
PULSE JET MIXER CLUSTER
SUPPORT STRUCTURE
DETAIL 10
DETAIL 11
DETAIL 3
DETAIL 4
DETAIL 5
RING BEAM
SECTION G-G
SECTION H-H
SECTION J-J
SECTION K-K
SECTIONS AND DETAILS
NLW LAG STORAGE VESSEL
HLP-VSL-00027A & B

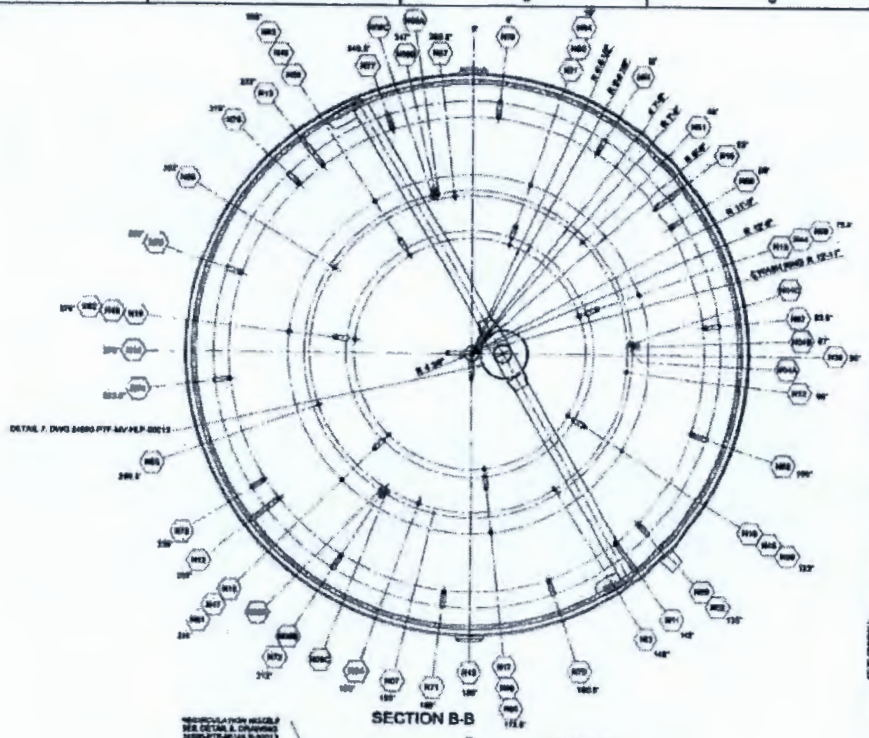

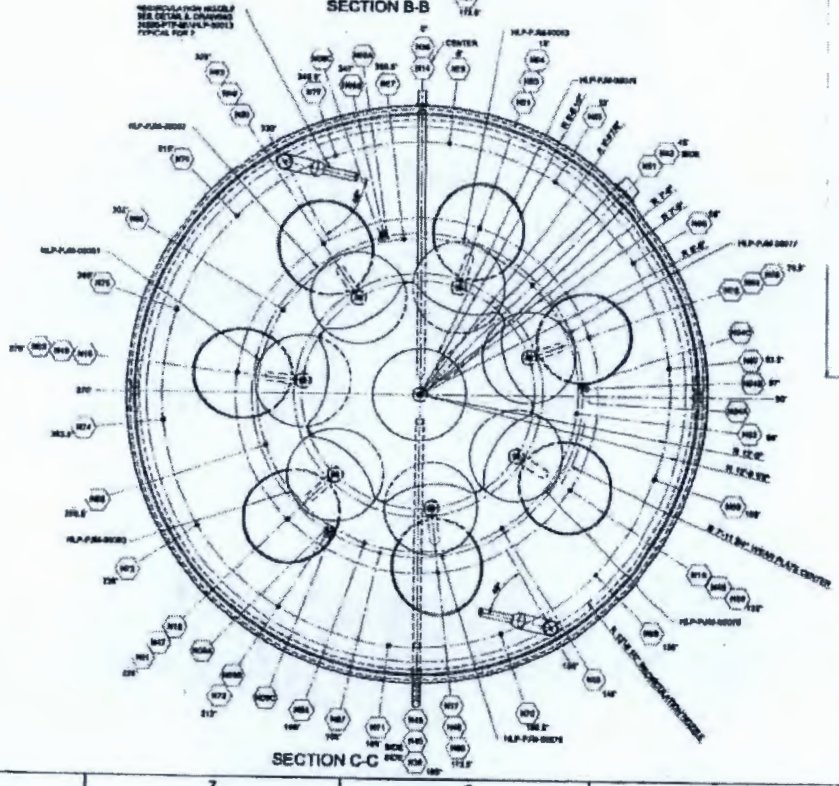

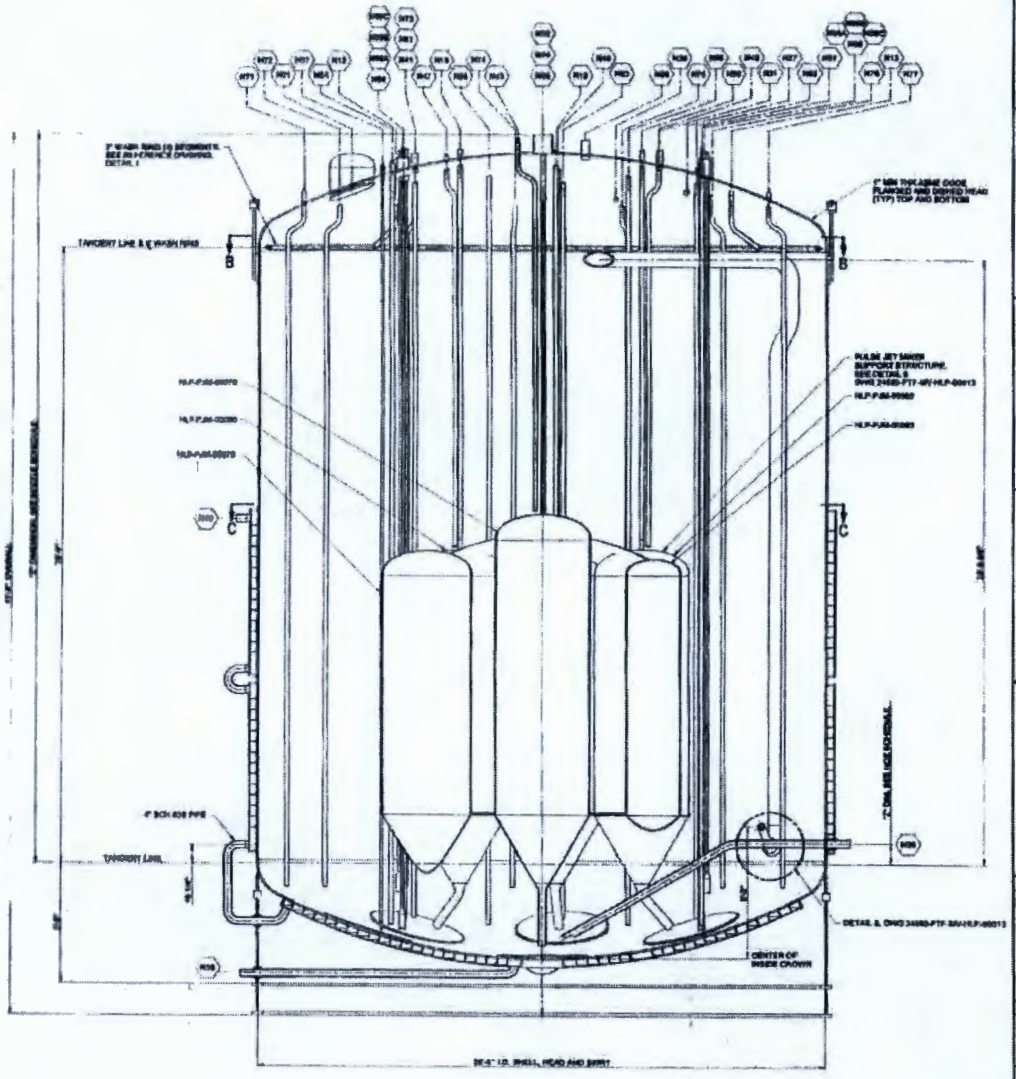

LAYOUT OF INTERNALS
HLW FEED BLEND VESSEL
HLP-VSL-00020

34590-PTF-MV-HLP-00012

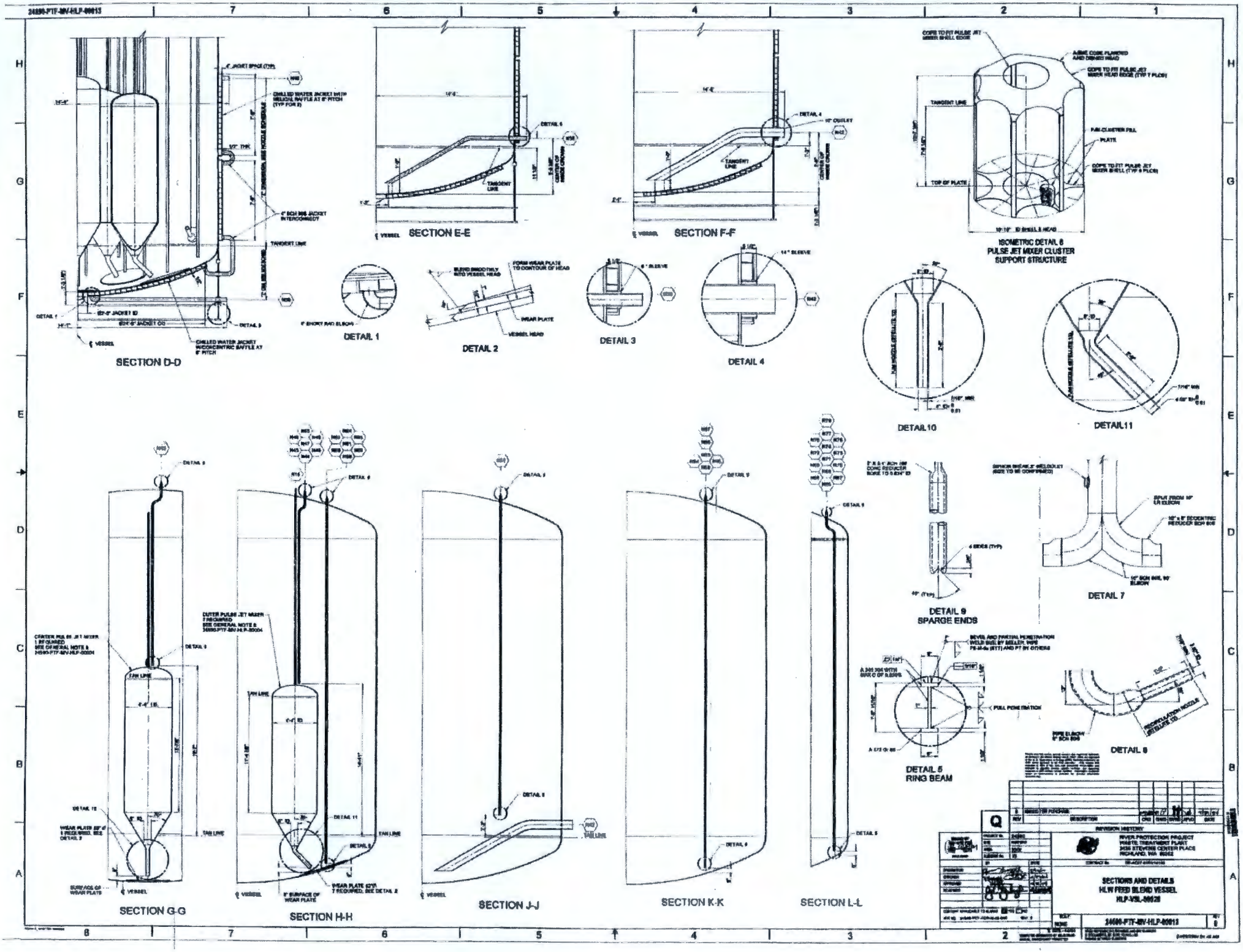
SECTION D-D
SECTION E-E
SECTION F-F
ISOMETRIC DETAIL 6
PULSE JET MIXER CLUSTER
SUPPORT STRUCTURE
DETAIL 1
DETAIL 2
DETAIL 3
DETAIL 4
DETAIL 10
DETAIL 11
DETAIL 9
SPARGE ENDS
DETAIL 7
DETAIL 5
RING BEAM
DETAIL 8
SECTION G-G
SECTION H-H
SECTION J-J
SECTION K-K
SECTION L-L
SECTIONS AND DETAILS
HLW FEED BLEND VESSEL
HLP-VSL-00020
24590-PTF-MV-HLP-00013

This page intentionally left blank.

Quarter Ending June 30, 2010 24590-PTF-PCN-ENV-08-005

Hanford Facility RCRA Permit Modification Notification Form

Part III, Operating Unit 10

Waste Treatment and Immobilization Plant

Index

Page 2 of 3: Hanford Facility RCRA Permit, Part III, Operating Unit 10, Waste Treatment and Immobilization Plant
Update Mechanical Datasheet for the PTF Ultrafiltration Feed Preparation (UFP) Vessel UFP-VSL-00001A in Appendix 8.6 of the Dangerous Waste Permit.

Submitted by Co-Operator:

Donna M Busche 3/9/10

D. M. Busche Date

Reviewed by ORP Program Office:

3/25/10

G. A. Girard Date

Quarter Ending June 30, 2010 24590-PTF-PCN-ENV-08-005

Hanford Facility RCRA Permit Modification Notification Form	
Unit: **Waste Treatment and Immobilization Plant**	Permit Part: **Part III, Operating Unit 10**

Description of Modification:

The purpose of this Class 1 prime modification is to update the Mechanical Datasheet for the PTF UFP Vessel UFP-VSL-00001A.

The following datasheet is being submitted to replace the datasheet currently in Appendix 8.6.

Appendix 8.6			
Replace:	24590-PTF-MVD-UFP-P0001, Rev 1	With:	24590-PTF-MVD-UFP-00001, Rev 11

This modification requests Ecology approval and incorporation into the permit changes to the datasheet as indicated by revision notes and triangles shown on the datasheets that have been issued since the last revision of the permitted version. Revisions are the result of ongoing design (changes from vendor preliminary data to vendor detailed design). The following is a summary of the significant changes on the attached datasheet:

- Updated notes and references for hydrodynamic and overblow loads (Rev. 7)
- Updated selected Design Data values (Revs. 8, 9, 11)
- Updated references to related process calculations, drawings, and reports (Revs. 8, 9, 10, 11)
- Added wear plate/erosion control requirements for the Pulse Jet Mixers (PJMs) (Revs. 7, 9, 10)
- Added and updated vessel design and operating data (Revs. 8, 9, 10, 11)
- Added functional/safety requirements data (Rev. 9)
- Added and revised the following sections (Revs. 9, 10, 11)
  - Functional/Safety Requirements
  - Seismic
  - Equipment Cyclic Datasheet - Parent Vessel
  - Equipment Cyclic Datasheet - PJMs
  - Equipment Cyclic Datasheet - Steam Spargers
  - Hydrodynamic Loading - PJMs
  - Normal Operations
  - Single Overblow Loading - PJMs
  - Multiple Overblow Loading - PJMs
  - Nozzle Loads / Notes for Nozzle Loads
  - Equipment Qualification Datasheet
  - References for Datasheets
- Updated Nozzle Loads data for N05, N05A, N05B, N05C, N58, N62, N65, N65A, N65B, N65C, N70, and N71 (Revs. 10, 11)
- Added Design Data Sparger Operation, Design Data and Criteria values (Rev. 11)
- Added/updated Nozzle Loads Section to include column/categories for "Design Nozzle Pressure (psig)" and "Design Nozzle Temperature (°F) (Rev. 11)

The following is a list of outstanding change documents that have not been incorporated into this modification:

- None

Quarter Ending June 30, 2010 24590-PTF-PCN-ENV-08-005

WAC 173-303-830 Modification Class:	Class 1	Class [1]1	Class 2	Class 3
Please mark the Modification Class:		X		

Enter relevant WAC 173-303-830, Appendix I Modification citation number:

Enter wording of WAC 173-303-830, Appendix I Modification citation:

In accordance with WAC 173-303-830(4)(d)(i), this modification notification is requested to be reviewed and approved as a Class [1]1 modification. WAC 173-303-830(4)(d)(ii)(A) states, "Class 1 modifications apply to minor changes that keep the permit current with routine changes to the facility or its operation. These changes do not substantially alter the permit conditions or reduce the capacity of the facility to protect human health or the environment. In the case of Class 1 modifications, the director may require prior approval."

Modification Approved/Concur:	Reviewed by Ecology:
[X] Yes [ ] Denied (state reason below)	Suzanne Dib 5/20/10
Reason for denial:	Kelly Elsethagen Date

BECHTEL	**MECHANICAL DATASHEET: VESSEL**	**PLANT ITEM No.** *24590-PTF-MV-UFP-VSL-00001A*

Project:	*RPP-WTP*	P&IDs: 11	*24590-PTF-M6-UFP-00001001, 00001002, 00007007, 00008007, 00015002*
Project No:	*24590*	Calculations: 11	*24590-PTF-M6C-UFP-00004, 24590-PTF-MVC-10-00003, 24590-WTP-MVC-50-00001, 24590-PTF-M6C-PVP-00017, 24590-PTF-M6C-UFP-00021, 24590-PTF-MVE-10-00003, 24590-PTF-MCC-UFP-00004*
Project Site:	*Hanford*	Vessel Drawings 11	*24590-PTF-MV-UFP-00001001, 00001002, 00001003*
Description:	*Ultrafiltration Feed Preparation Vessel*	Reports 11	*24590-WTP-RPT-ENG-07-007, 24590-PTF-N1D-UFP-00005, 24590-WTP-RPT-M-06-003, 24590-WTP-RPT-M-04-0002, 24590-PTF-M6X-UFP-00148, 24590-PTF-M6X-UFP-00174, 24590-PTF-M6X-UFP-00288, 24590-PTF-M6X-UFP-00291, 24590-PTF-M6X-UFP-00386, 24590-PTF-M6X-UFP-00387, 24590-PTF-M6X-UFP-00429*

R11105799

Reference Data

Charge Vessels (Tag Numbers)	*DELETED*
Pulsejet Mixers / Agitators (Tag Numbers)	*UFP-PJM-00001, UFP-PJM-00002, UFP-PJM-00003, UFP-PJM-00004, UFP-PJM-00044, UFP-PJM-00053, UFP-PJM-00105, UFP-PJM-00106*
RFDs/Pumps (Tag Numbers)	*DELETED*

Design Data

Quality Level		*Q (See Note 18)*	Fabrication Specs	*24590-WTP-3PS-MV00-T0001*		
Seismic Category		*SC-I*	Design Code	*ASME VIII Div 1*		
Service/Contents		*Radioactive Liquid*	Code Stamp	*Yes*		
Design Specific Gravity		*1.5*	NB Registration	*Yes*		
Maximum Operating Volume	gal	*64,562* 11	Weights (lbs)	Empty	Operating	Test
Total Volume	gal	*75,594* 11	Estimated	*224,440*	*1,073,530*	*888,340*
Environmental Qualification		*See EQD Section*				

ISSUED BY RPP-WTP PDC

Inside Diameter	inch	*240*					Wind Design	*Not Required*	
Length/Height (TL-TL)	inch	*308.6 (Note 19)*					Snow Design	*Not Required*	
		Vessel Operating	Vessel Design	Coil/Jacket Design	Sparger Operation 11	Sparger Design 11	Seismic Design	*24590-WTP-3PS-MV00-T0002*	
Internal Pressure	psig	*ATM*	*15*	*35*	*135* 11	*160* 11			
External Pressure	psig	*1.5 (Note 3)*	*2.0 (Note 3)*	*0.0*	*Vessel Internal Pressure (OP)* 11	*Vessel Internal Pressure (Design)* 11	Postweld Heat Treat	*Not Required*	
Temperature (Note 30)	°F	*194*	*212*	*212*	*358* 11	*375* 11	Corrosion Allowance	Inch	*0.040 (Note 12, 13, 20)* 11
Min. Design Metal Temp.	°F	*40*							

Materials of Construction

Component	Material	Minimum Thickness / Size	Containment
Top Head	*SA 240 316 Note 1*	*See Drawing*	*Auxiliary (see Note 8)*
Shell	*SA 240 316 Note 1*	*See Drawing*	*Primary (see Note 8)*
Bottom Head	*SA 240 316 Note 1*	*See Drawing*	*Primary (see Note 8)*
Support	*SA 240 304 Note 1*	*See Drawing*	*N/A*
Jacket/Coils/Half-Pipe Jacket	*SA 240 316 Note 1, Note 1a*	*See Drawing*	*N/A*
Internals	*SA 240 316 Note 1*	*See Drawing*	*Thermowells Primary*
Pipe Nozzles	*SA 312 TP316 Note 1, Note 1b*	*See Drawing*	*Primary (see Note 8)*
Forgings/ Bar stock	*SA 182 F316 Note 1*	*See Drawing*	*N/A*
Wash Ring Pipe	*SA 312 TP316 (seamless) Note 1*	*See Drawing*	*N/A*
Bolting/Gaskets	*N/A*	*N/A*	*N/A*
Wear Plates	*SA 240 316 Note 1*	*See Drawing*	*N/A*
Steam Spargers	*SB 622 (seamless) UNS N10276*	*See Drawing*	*Auxiliary (see Note 8)*

Miscellaneous Data

Orientation	*Vertical*	Support Type	*Skirt*
Insulation Function	*Not Applicable*	Insulation Material	*Not Applicable*

Insulation Thickness (inch)	***Not Applicable***	Internal Finish	***Note 2***
		External Finish	***Note 2***

Notes/Remarks

Note 1. Maximum 0.030% carbon.

Note 1a. Cooling water jacket on the vessel shell is SA 240 304 0.030% max carbon per 24590-WTP-SDDR-PROC-05-00227.

Note 1b. Pipe material (SA312) to be seamless, use of plate material (SA 240) for nozzles shall have the seam weld 100% volumetrically examined

Note 2. Welds de-scaled as laid.

Note 3. External design pressure under the jacket shall be rated for the jacket internal design pressure plus vessel external design pressure to account for ventilation fan pressure. External design pressure of 2.0 psig is based on a normal operating pressure of -35 in WG (1.26 psig) with an additional margin (see 24590-PTF-M6C-PVP-00017).

Note 4. Deleted

Note 5. Deleted

Note 6. Vessel volumes are approximate and do not account for the manufacturing tolerances, nozzles, and displacement of internals.

Note 7. This vessel is in a Black Cell.

Note 8. All welds forming part of the primary and auxiliary containment including nozzle attachment welds shall be subjected to 100% volumetric examination.

Note 9. Contents of this document are Dangerous Waste Permit affecting.

Note 10. Deleted as per Report No. 24590-WTP-RPT-M-04-0007 Rev. 0 dated Nov. 01, 2004.

Note 11. Deleted.

Note 12. Seller shall provide wear plates for erosion control on the bottom head.

Note 13. Ensure that an additional 0.087" is available for erosion in the lower 4" of the interior conical surface of the pulse jet mixers.

Note 14. All hydrodynamic and overblow loads shall be included with seismic analysis as per this data sheet.

Note 15. Deleted

Note 16. Deleted

Note 17. Revision 8 of this data sheet incorporates the CCN 129149 / 128549. The CCN added the words "in the form of overblow pressures" to the note shown on the overblow graph and further revised the note below the graph as noted herein.

Note 18. Vessel to be designed, fabricated, tested to Q, L-1 requirements defined in 24590-WTP-3PS-MV00-T0001.

Note 19. The 308.6" TL-TL length is the actual dimension provided by as-builds.

Note 20. Corrosion allowance for jacket shall be 0.04 inch, corrosion allowance for the Steam Spargers shall also be 0.040 inch, which includes 0.024 inch corrosion allowance and 0.016 inch general erosion allowance. Corrosion/erosion allowance for the steam sparger holes shall be 0.031".

Note 21. Changed to quality level, revised specific gravity, revised operating temperature, revised vessel external design pressure, revised design temperatures for vessel and jacket, revised Notes 3, 4, 14, 15, and 16, added Notes 1a, 18, 19, 20, 21, 22, 23, 24, 25, 26, 27, and 28, added functional/safety requirements, added seismic section, change to parent vessel cyclic data, change to hydrodynamic loads for normal operations, revised single overblow loads, added MOB loads, change to PJM cyclic data, added nozzle loads, added Equipment Qualification Data Sheet, added DOE Radioactive Material Disclaimer, added E&NS table and signature.

11 Notes 22 - 28 Deleted.

Note 29. If any Sections contain a revision triangle (#) next to the Section heading, this means the entire section has been revised or is new - the entire section must be reviewed for changes/additions. Removed E&NS screening statement supporting E&NS simplified review process. Added the Steam Sparging System which includes Material and corrosion call outs, additional nozzle loads and a Steam Sparger Section in the Equipment Cyclic Data Sheets. Modified/updated pressure and temperatures to match current P&ID Line Lists and removed the requirements for the Hot Nozzles (N18, N55, N56 & N57) which included deleting Note 16. Revisions to EQ Data Sheets as noted.

11 Note 30. Operating and Design temperatures revised based on DOE contract change - reference CCN 187535 and P&ID Line list 24590-PTF-M6X-UFP-00288.

Functional/Safety Requirements

UFP-VSL-00001A (parent vessel) is considered a high active process vessel credited to prevent spills of large quantities of high activity process liquid and provide primary confinement for radioactive releases. Pulse Jet Mixers (PJMs) provide a mixing function in the vessel to prevent hydrogen accumulation. Vessel level instrumentation provides level monitoring to prevent overflows and ensure proper headspace volumes are maintained for hydrogen dilution. In order to meet the above functions the vessel and internals shall be designed and fabricated in accordance with ASME Section VIII and must remain in the elastic range of the material for all defined load combinations.

Seismic 11

Seismic analysis to be combined with operating conditions, single PJM overblow, and any sloshing loads imposed. Sloshing loads on vessel shell and internals are calculated per ASCE 4-98. Analysis to consider worst case seismic loads on the vessel proper and on the vessel internals.

Equipment Cyclic Data Sheet – Parent Vessel

Component Plant Item Number:	*24590-PTF-MV-UFP-VSL-00001A*
Component Description	*Ultrafiltration Feed Preparation Vessel*

The information below is provisional and envelopes operational duty for fatigue assessment. It is not to be used as operational data.

Materials of Construction	*ASME SA240 316 with 0.030 % max. Carbon*
Design Life	*40 Years*
Component Function and Life Cycle Description	*The system receives waste feed from the Waste Feed Evaporation Process System (FEP), and HLW Feed Receipt Vessel (HLP). The vessel is filled over a period of approximately 5 hours. If necessary, the vessel cools the waste prior to ultrafiltration operations. The precipitation of Sr/TRU compounds occurs in this vessel. The main transfer from this vessel occurs through a centrifugal pump to the Ultrafiltration Feed Vessels.*

Load Type		Min	Max	Number of Cycles	Comment
Design Pressure	psig	-2.0	15	10	*Nominal assumption for testing, applied with 35 psig in cooling jacket*
Operating Pressure	psig	-1.5 -1.5	0 2.8	7.0E6 40	*The vessel will remain at constant pressure depending upon the HVAC plant*
Operating Temp	°F	50	194	12120 11	
Contents Specific Gravity		1.0	1.5	12120 11	*Stress range is for empty to full* 11
Contents Level	inch	0	350	12120 11	

Notes

- ***Cycle increase: Increase the numbers of operational cycles given above by 10% to account for commissioning duty unless otherwise noted.***
- 11 ***This vessel will be heated 12,120 times over the 40 year life of the plant, per UFP batch cycle, ECCN 24590-PTF-MVE-10-00003.***

Equipment Cyclic Data Sheet - PJMs

Component Plant Item Number:	*UFP-PJM-00001, UFP-PJM-00002, UFP-PJM-00003, UFP-PJM-00004, UFP-PJM-00044, UFP-PJM-00053, UFP-PJM-00105, UFP-PJM-00106*
Component Description	*Pulse Jet Mixers*

The information below is provisional and envelopes operational duty for fatigue assessment. It is not to be used as operational data.

Materials of Construction	*ASME SA240 316 with 0.03 % max. Carbon*
Design Life	*40 Years*
Component Function and Life Cycle Description	*These pulse jet mixers (PJMs) are cyclically loaded using vacuum to fully fill the PJM with process liquid and compressed air to fully empty the PJM. The PJMs are contained within a parent vessel with varying liquid level. They shall be designed to cycle between the maximum design pressure and the minimum design pressure plus the external static head imposed by the parent vessel. The PJM supports shall be designed to cycle between fully buoyant (PJM empty and parent vessel full) and fully loaded (PJM full and parent vessel empty) states. Thrust loads shall be applied to the fully buoyant state, assume parent vessel is full for 50% of the PJM cycles.*

Load Type		Min	Max	Number of Cycles	Comment
Design Pressure	psig	*FV*	*35*	*100*	*Nominal assumption for testing*
Operating Pressure	psig	*FV*	*25*	*1.3E7*	
Operating Temperature	°F	*50*	*194*	*12120* 11	*Same as Parent Vessel*
Contents Specific Gravity		*1.0*	*1.5*	*12120* 11	*Same as Parent Vessel*
Contents Level	inch	*Empty*	*Flooded*	*1.3E7*	
Thrust	lbf	*-400*	*400*	*1.3E7*	*Conservative*
Localized Features					
Nozzles		*N/A*			
Supports		*Buoyant*	*Loaded*	*1.3E7*	

Notes

- ***Cycle increase: The Seller must increase the numbers of operational cycles given above by 10% to account for commissioning duty unless otherwise noted.***
- 11 ***This vessel will be heated 12,120 times over the 40 year life of the plant, per UFP batch cycle, ECCN 24590-PTF-MVE-10-00003.***

Equipment Cyclic Data Sheet – Steam Spargers 11

Component Plant Item Number:	***There is no Component Plant Item Number associated with Nozzles N70 and N71.***
Component Description	***Steam Spargers***

The information below is provisional and envelopes operational duty for fatigue assessment. It is not to be used as operational data.

Materials of Construction	***Hastelloy***
Design Life	***40 Years***
Component Function and Life Cycle Description	***The Steam Spargers will heat the process fluid until it gets up to temperature for digestion and will sustain this temperature for the time required to complete digestion. It will take up to approximately 9 hrs to heat and up to 16 hrs to digest (24590-WTP-RPT-ENG-08-016). The Steam Sparger is pressurized by air until the vessel is full and the steam is introduced. The vessel is heated up this occurs 12120 cycles. After vessel is heated the Steam Sparger is again pressured by air.***

Load Type		Min Steam	Max Steam	Min Air	Max Air	Number of Cycles	Comment
Design Pressure	psig	*-2.0*	*160*	*-2.0*	*150*	*10*	*Nominal assumption for testing*
Design Temp.	°F	*50*	*375*	*50*	*140*	*N/A*	
Operating Pressure	psig	*-1.5*	*111/76*	*-1.5*	*150/51*	*12120*	*See EC-Note 2 below for Max Steam and Max Air Values. Conservative Cyclic Assumption, see EC-Note 3 below.*
Operating Temp	°F	*50*	*343/320*	*50*	*135/80*	*12120*	*See EC-Note 2 below for Max Steam and Max Air Values. Conservative Cyclic Assumption, see EC-Note 3 below.*
Contents Specific Gravity		*0.0*	*3.81 SG air*		*11.0 SG air*		*Per Process Stream Properties, 24590-WTP-RPT-ENG-07-007, Rev. 0, Table 4-18, page 87. Cycles per the Conservative Assumption, see notes below.*
Contents Specific Gravity w / liquid		*1.0*	*1.5*				*The worst case is the pipe gets flooded, vessel SG used*

Equipment Cyclic Data Sheet Notes 11

EC-Note 1: Cycle increase: The Seller must increase the numbers of operational cycles given above by 10% to account for commissioning duty unless otherwise noted.

EC-Note 2: The Steam lines are controlled by a Steam Control Valve (on the HPS-RK-17) upstream of the vessel. According to 24590-PTF-M6C-UFP-00021 the pressure drop across that valve will vary from 24 psi to 59 psi.

Therefore, with an upstream pressure prior to the valve of 135 psig (per the normal pressure of line 24590-PTF-PP-UFP-DB-03119-S11C-06-01 from both P&ID Line Lists 24590-PTF-M6X-UFP-00386 and 24590-PTF-M6X-UFP-00387) the range of pressure the Steam Sparger will see for normal operations will be from 111 psig (135 psig - 24 psig) to 76 psig (135 psig - 59 psig). The steam temperature is determined from the steam table for the correspondent pressure of 111 psig or 76 psig.

The Max Temperature and Max Pressure for the air purge cycle of the Steam Sparger System are per the PSA supply lines as defined in Notes 5 and 6 of P&ID Line Lists 24590-PDF-M6X-UFP-00386 and 24590-PDF-M6X-UFP-00387 respectively.

The Normal Temperature and Normal Pressure for the air purge cycle of the Steam Sparger System are per the normal values given for line 24590-PTF-PP-UFP-GQ-64454-S11C-011/2-01 in P&ID Line Lists 24590-PDF-M6X-UFP-00386 and 24590-PDF-M6X-UFP-00387.

The steam and air used in the Sparger operation varies over a short range during operation. These values are to be used such as to give the highest loading on the system/vessel. The pressure and temperatures values are shown in pairs at the extremes and should be used together, i.e. 111 psig and 343 F.

Minimum values are based on the vessel's minimum pressures and temperatures.

EC-Note 3: Conservative Cyclic Assumption is based on the following:

Cycles to Heat the Vessel
This vessel will be heated 12,120 times over the 40 year life of the plant, per UFP batch cycle, ECCN 24590-PTF-MVE-10-00003.

Cycles to Maintain the Vessel Temperature
The steam nozzles are not planned to be cycled on/off for the temperature control valve on the steam supply line. Both of the semi-circle steam sparge rings are to be used for heat up of the vessel contents. Once the vessel contents reach digestion temperature, one of the semi-circle steam sparge ring will be shut off and purged with air. The remaining semi-circle steam sparge ring will be operated at reduced steam flowrate to maintain the temperature set point (see calculation 24590-PTF-MCC-UFP-00004 for steam flow rate requirements). Therefore, the cycles to maintain the vessel temperature is the same as the heating cycle, 12,120 cycles.

The specific volume of the steam at 111 psig is 3.5 ft^3/lb the density of air at 70 F is 0.075 lb/ft^3 the specific gravity is then: (1/3.5)/0.075 = 3.81 in SG_{air}.

The specific gravity of air at 150 psig is then found by: The density of air at 70 F and 0 psig 0.075 lb/ft^3 and at 80 F and 150 psig 0.824 lb/ft^3 calculating 0.824 / 0.075 = 11.0 the SG_{air}.

The sparger system is to be operated such: Air is to be used to keep the liquid out of the sparger during vessel filling and draining. After vessel is filled the air is replaced by steam through the sparger to heat the liquid to 194 F. One of the spargers is returned to air service after the liquid reaches 194 F. One of the spargers is used throttled back to maintain liquid temperature.

The Specific gravity of the vessel liquid is not significantly changed during the process, however the specific gravity of each batch can vary as noted above.

Hydrodynamic Loading - Pulse Jet Mixers (PJMs)

Pulse Jet Mixers (PJMs) are designed to blow the fluid in the vessel in the form of a jet that induces agitation and mixing in the fluid. The mixing is required for various reasons: to enhance the heat transfer from the fluid to the cooling jackets and to release hydrogen from the fluid are examples. PJMs work on pressurized air to drive the fluid out of the PJM and into the vessel, this is called the "drive" phase. After the drive phase, all PJMs are normally simultaneously refilled with the vessel slurry via either a suction applied to each PJM internal headspace or (when slurry temperature is highly elevated) via gravity refill. The end of the drive phase is controlled such that the PJM does not empty completely. However, a condition can exist in which the PJM continues to blow during the drive phase, ejecting air after all the fluid is expelled. This condition is called a PJM overblow. This can occur with a single PJM overblowing or if more than one PJM overblows, it is called Multiple Overblow (MOB). Fluid motion during single overblow or MOB in a vessel causes hydrodynamic loads on the internal vessel components in the form of increased pressure. This fluid motion is cyclic based on the number of drive phases imposed by the PJMs. There are several types of hydrodynamic loads that the vessel internals will be designed for: 1) Normal operations, 2) Single PJM Overblow, and 3) Multiple PJM Overblow. The vessel internals shall be designed and supported for all three of these load conditions. The following tables and graphs indicate the required pressure/forces to apply to the vessel internals along with the number of cycles for each condition.

Normal Operations

Discussion:

In normal operation, pulse jet mixers discharge liquid into the parent vessel imposing a cyclical hydrodynamic load on all internal components. Occasionally, an upset condition designated 'overblow' causes air to be discharged from any single pulse jet mixer. All internal components shall be designed for the combination of the normal operational hydrodynamic loads and overblow loads, and this load combination is also to be assumed to act concurrently with seismic loads. PJM Overblow loads are given below, normal loadings are given here.

Normal Operation:

Normal operation imposes a cyclical load ranging between -0.15 and 0.25 psi in the radial direction and -0.15 to 0.15 psi in the vertical direction for 1.3E7 cycles. The hydrodynamic pressure applies across the projected area of the component. Positive hydrodynamic forces act in the radial, outward direction and the vertical, upward direction. Seller shall apply the radial load simultaneously in the radial direction and normal to the radial direction in the horizontal plane.

Single Overblow Loading- PJMs

Single PJM Overblow loads vary as a function of the horizontal distance from the center of the overblowing pulse jet mixer nozzle and the elevation 'H' above the overblowing pulse jet mixer nozzle up to the overflow level as plotted in the form of overblow pressures:

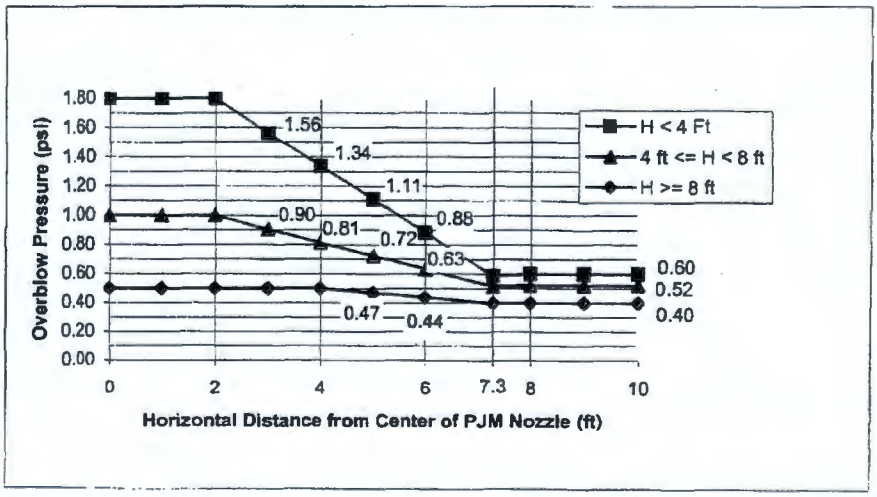

For all vessel internal components other than the overblowing pulse jet mixer, the overblow forces shall be applied a). in the vertical direction, and b). in the horizontal direction, radiating from the centerline of the overblowing pulse jet mixer. For the overblowing pulse jet mixer, the force shall be applied in the vertical upward direction only. The overblow force on all components, including the structures and supports, shall be calculated by applying the overblow pressure at the location of the nearest surface of the component and to the projected area of the component, facing the appropriate direction. The normal force component, specified for the normal pulse jet mixer operation condition, is not applicable to the overblow condition. Any single PJM may overblow but the total number of cycles for all PJM single overblow events is 2000 cycles. This load combination acts concurrently with seismic loads.

Multiple Overblow Loading- PJMs

Multiple PJM Overblow (MOB) loads vary as a function of the horizontal distance from the center of the overblowing pulse jet mixer nozzle and the elevation 'H' above the overblowing pulse jet mixer nozzle up to the overflow level as plotted in the form of overblow pressures. Multiple application of the Single PJM Overblow loading forms the basis for the MOB loads. Usage of the above Single Overblow graph along with Report # 24590-WTP-RPT-M-06-003 (Summary Report: Hydrodynamic Loads for PJM Multiple Overblow Condition) is required to determine the forces on each vessel internal component (targets) due to MOB. (Note: this report will be provided in the Material Requisition Package). This load condition does not act concurrently with seismic loads, but will be included with other normal operating load conditions. The number of cycles applied to MOBs is 400 cycles.

Nozzle Loads

Nozzle	Design Nozzle Press (psig) 11	Design Nozzle Temp (°F) 11	Size	Load Type	Loads - lbs			Moments - ft-lbs		
					Fx	Fy	Fz	Mx	My	Mz
N02	170	212	3"	Weight	52	138	52	160	75	204
				Seismic	162	108	162	468	701	701
				Thermal	134	58	228	190	380	380
N04	15	113	2" OD	Weight	50	60	50	75	75	75
				Seismic	106	70	106	158	237	237
				Thermal	33	29	44	49	97	97
N05	15	212	6"	Weight	N05 is parent nozzle, nozzle loads are applied via N05A, N05B, N05C					
				Seismic						
				Thermal						
N05A (Note E)	15	212	1"	Weight	15	20	15	20	20	20
				Seismic	30	20	30	37	55	55
				Thermal	9	8	12	11	22	22
N05B (Note E)	100	212	1"	Weight	15	20	15	20	20	20
				Seismic	30	20	30	37	55	55
				Thermal	9	8	12	12	22	22
N05C (Note E)	100	212	1"	Weight	15	20	15	20	20	20
				Seismic	30	20	30	37	55	55
				Thermal	9	8	12	12	22	22
N07	75	185	4"	Weight	87	262	87	216	135	135
				Seismic	335	189	274	1448	1320	2223
				Thermal	113	131	150	360	720	720
N11	169	120	3"	Weight	52	203	52	119	75	75
				Seismic	162	146	162	544	701	701
				Thermal	66	76	88	303	380	380
N13	125	125	3"	Weight	52	131	52	119	75	89
				Seismic	269	213	382	898	701	701
				Thermal	66	58	88	190	380	380
N15	15	212	3"	Weight	52	84	52	119	75	75
				Seismic	162	108	162	468	701	701
				Thermal	66	58	88	190	380	380
N16	125	155	3"	Weight	52	84	52	119	75	75
				Seismic	162	108	162	468	701	701
				Thermal	66	58	88	190	380	380
N18	230	138	6"	Weight	210	612	210	598	374	374
				Seismic	663	449	663	2423	3638	3638
				Thermal	524	1086	375	1593	2046	2046
N19	15	212	8"	Weight	234	373	234	741	464	464
				Seismic	734	490	734	2948	4418	4418
				Thermal	340	303	455	1378	2740	2740
N22	15	212	1 1/2"	Weight	35	35	35	40	40	40
				Seismic	60	40	60	91	137	137
				Thermal	19	17	25	28	55	55

Nozzle	Design Nozzle Press (psig) 11	Design Nozzle Temp (°F) 11	Size	Load Type	Loads - lbs Fx	Fy	Fz	Moments - ft-lbs Mx	My	Mz
N23	170	170	3"	Weight	52	148	52	119	75	75
				Seismic	192	119	162	665	701	1018
				Thermal	66	58	88	388	380	380
N24	125	125	3"	Weight	52	164	52	119	75	75
				Seismic	228	683	551	2297	701	701
				Thermal	66	136	88	213	380	380
N28	75	185	4"	Weight	87	146	87	216	135	135
				Seismic	274	183	274	878	1320	1320
				Thermal	113	100	150	360	720	720
N30	75	185	4"	Weight	87	346	87	216	135	224
				Seismic	274	249	274	1337	1320	1320
				Thermal	113	100	150	360	720	720
N35	190	194	3"	Weight	52	86	52	119	75	75
				Seismic	162	108	162	468	741	701
				Thermal	66	58	88	190	380	380
N37	124	140	2"	Weight	50	60	50	75	75	75
				Seismic	106	70	106	158	237	237
				Thermal	45	118	44	125	97	168
N38	124	140	2"	Weight	50	60	50	75	75	75
				Seismic	106	70	106	158	237	237
				Thermal	33	42	51	186	97	97
N39	124	140	2"	Weight	50	60	50	75	75	75
				Seismic	106	70	106	158	237	237
				Thermal	33	114	70	252	97	97
N40	124	140	2"	Weight	50	60	50	75	75	75
				Seismic	106	70	106	418	237	237
				Thermal	33	81	44	49	97	97
N41	124	140	2"	Weight	50	60	50	75	75	75
				Seismic	106	70	106	158	237	237
				Thermal	45	118	44	125	97	168
N42	124	140	2"	Weight	50	60	50	75	75	75
				Seismic	106	70	106	158	237	237
				Thermal	33	69	68	254	97	97
N43	124	140	2"	Weight	50	62	50	75	75	75
				Seismic	106	70	106	158	237	237
				Thermal	33	29	44	126	97	97
N44	124	140	2"	Weight	50	60	50	75	75	75
				Seismic	106	70	106	158	237	237
				Thermal	33	48	47	179	97	97
N47	170	175	2"	Weight	50	87	50	75	75	75
				Seismic	106	70	106	158	237	269
				Thermal	33	29	44	112	97	97
N48	170	175	2"	Weight	50	72	50	75	75	75
				Seismic	106	70	106	158	237	237
				Thermal	33	33	45	185	97	97

Nozzle	Design Nozzle Press (psig) 11	Design Nozzle Temp (°F) 11	Size	Load Type	Loads - lbs Fx	Fy	Fz	Moments - ft-lbs Mx	My	Mz
N49	170	175	2"	Weight	50	99	50	75	75	75
				Seismic	106	122	106	242	237	242
				Thermal	33	29	44	152	97	97
N51	124	175	2"	Weight	50	60	50	75	75	75
				Seismic	106	70	106	245	237	246
				Thermal	33	38	44	64	97	97
N52	124	175	2"	Weight	50	60	50	75	75	75
				Seismic	106	70	106	158	237	237
				Thermal	99	29	106	209	183	97
N53	125	150	3"	Weight	52	143	52	119	75	75
				Seismic	162	108	162	468	701	701
				Thermal	129	58	88	190	380	396
N54	15	212	8"	Weight	234	492	234	741	464	1098
				Seismic	1228	1186	2128	2948	12158	6362
				Thermal	340	354	455	1372	2740	2740
N55	15	212	6"	Weight	210	461	210	598	374	374
				Seismic	663	600	1270	2423	3638	4751
				Thermal	280	1184	390	1023	2046	3042
N56	15	212	2"	Weight	50	111	50	75	75	75
				Seismic	106	70	106	213	237	237
				Thermal	33	29	44	49	97	97
N57	15	212	2"	Weight	50	105	50	75	75	230
				Seismic	106	70	106	158	237	237
				Thermal	148	30	44	49	97	97
N58 (Note F)	35	140	6"	Weight	210	335	210	598	374	374
				Seismic	663	443	663	2423	3638	3638
				Thermal	280	250	375	1023	2046	2046
N59	35	140	6"	Weight	210	459	210	598	374	644
				Seismic	663	466	663	2423	3638	3638
				Thermal	280	250	375	1098	2046	2046
N60	15	212	3"	Weight	52	84	52	119	75	75
				Seismic	162	108	162	492	950	701
				Thermal	76	190	88	530	380	380
N61	15	212	24"	Weight	Manway					
				Seismic						
				Thermal						
N62	169	120	3" 11	11 Weight	100	150	100	200	200	200
				11 Seismic	162	108	162	468	701	701
				11 Thermal	66	58	88	190	380	380
N63	170	150	2"	Weight	50	60	50	75	75	75
				Seismic	184	70	106	159	237	382
				Thermal	33	29	44	49	97	97
N65	15	212	6"	Weight	N65 is parent nozzle, nozzle loads are applied via N65A, N65B, N65C					
				Seismic						
				Thermal						

	MECHANICAL DATASHEET: VESSEL	PLANT ITEM No. *24590-PTF-MV-UFP-VSL-00001A*

Nozzle	Design Nozzle Press (psig) 11	Design Nozzle Temp (°F) 11	Size	Load Type	Loads - lbs			Moments - ft-lbs		
					Fx	Fy	Fz	Mx	My	Mz
N65A (Note E)	15	212	1"	Weight	15	20	15	20	20	20
				Seismic	30	20	30	37	55	55
				Thermal	9	8	12	12	22	22
N65B (Note E)	100	212	1"	Weight	15	20	15	20	20	20
				Seismic	30	20	30	37	55	55
				Thermal	9	8	12	12	22	22
N65C (Note E)	100	212	1"	Weight	15	20	15	20	20	20
				Seismic	30	20	30	37	55	55
				Thermal	9	8	12	12	22	22
N70	160	375	4"	Weight	87	359	87	216	135	224
				Seismic	335	249	274	1448	1320	2223
				Thermal	120	131	150	360	720	720
N71	160	375	4"	Weight	87	359	87	216	135	224
				Seismic	335	249	274	1448	1320	2223
				Thermal	120	131	150	360	720	720

Notes for Nozzle Loads

A. *Direction of load application for shell nozzles is per diagrams in 24590-WTP-3PS-MV00-T0001 Appendix A.*
B. *For nozzles in head: x = North/South, y = Vertical, and z = East/West - Vessel 0° defined as north.*
C. *Deleted*
D. *Nozzle loads shown are to be used in place of those specified in 24590-WTP-3PS-MV00-T0001 – do not apply thermal reduction factors.*
E. *Values provided at plate on top of parent nozzle.*
F. *Values provided at jacket, not at skirt penetration.*

EQUIPMENT QUALIFICATION DATASHEET (EQD)

Equipment Identification			
Component Tag Number	24590-PTF-MV-UFP-VSL-00001A	Safety Classification	☒ SC ☐ SS ☐ APC ☐ SDC ☐ SDS ☐ RRC All subcomponents are SC
Manufacturer / Supplier	Northwest Copper Works		
Requisition Number	24590-QL-MRE-MVA0-00001		
Model	Custom	Seismic Category	☒ SC-I ☐ SC-II ☐ SC-III ☐ SC-IV All subcomponents are design to SC-I
Description (Include descriptive text [e.g., location, elevation])	Ultrafiltration Feed Preparation Vessel, Pre-Treatment Column Lines J/11.5, 0'-0" Elevation		
Safety Function(s)	UFP-VSL-00001A (parent vessel) is considered a high active process vessel credited to prevent spills of large quantities of high activity process liquid and provide primary confinement for radioactive releases. Pulse Jet Mixers (PJMs) provide a mixing function in the vessel to prevent hydrogen accumulation.		

Seismic Safety Function	☒ Yes ☐ No	Room Number(s):	P-0106, Pre-Treatment Facility
Maintenance Accessible	☐ Yes ☒ No	Method of Maintenance Access:	☐ Remote ☐ Hands On ☒ None
Seismic Operability Requirements:	☒ During Seismic Event	☒ After Seismic Event	
ITS Equipment Type:	☒ Passive Mechanical	☐ Active Mechanical	☐ Electrical

Equipment Environmental Qualification (EEQ)

Environment ☐ Mild ☐ Harsh Contamination Class: C5 Radiation Class: R5	Hi Rad Service ☒ Yes ☐ No	Design Life (yrs) ☒ 40 ☐ Other ____

Parameter Type/Units	Parameter Value	Time Duration (number)	Time Units	WTP Document Number (BUYER)	Submittal Number (SELLER)
Normal					
Normal High Temperature (°F)	113	40	yrs	24590-PTF-U0D-W16T-00001	E-Note 1
Normal Low Temperature (°F)	59	40	yrs	24590-PTF-U0D-W16T-00001	E-Note 1
Normal High Relative Humidity (%RH)	100	40	yrs	24590-PTF-U0D-W16T-00001	E-Note 1
Normal Low Relative Humidity (%RH)	5	40	yrs	24590-PTF-U0D-W16T-00001	E-Note 1
Normal High Pressure (in.-w.g.)	0 (E-Note 2)	40	yrs	24590-PTF-U0D-W16T-00001	E-Note 1
Normal Low Pressure (in.-w.g.)	(-) 1.4 (E-Note 2)	40	yrs	24590-PTF-U0D-W16T-00001	E-Note 1
Normal Radiation Dose Rate (mR/hr)	255000 (E-Note 4)	40 (E-Note 7)	yrs	24590-PTF-U0D-W16T-00001	E-Note 1
Vibration Magnitude (g)	N/A	N/A	N/A	N/A	N/A
Vibration Frequency (Hz)	N/A	N/A	N/A	N/A	N/A
Additional Normal Information:	N/A				

EQUIPMENT QUALIFICATION DATASHEET (EQD)

Equipment Environmental Qualification (EEQ) *(continued)*

Parameter Type/Units	Parameter Value	Time Duration (number)	Time units	WTP Document Number (BUYER)	Submittal Number (SELLER)
Abnormal					
Abnormal High Temperature (°F)	128	8	hrs/yr	24590-PTF-U0D-W16T-00001	E-Note 1
Abnormal Low Temperature (°F)	40	8	hrs/yr	24590-PTF-U0D-W16T-00001	E-Note 1
Abnormal High Relative Humidity (%RH)	100	24	hrs/yr	24590-PTF-U0D-W16T-00001	E-Note 1
Abnormal Low Relative Humidity (%RH)	6	72	hrs/yr	24590-PTF-U0D-W16T-00001	E-Note 1
Abnormal High Pressure (in.-w.g.)	4 (E-Note 2)	8	hrs/yr	24590-PTF-U0D-W16T-00001	E-Note 1
Abnormal Low Pressure (in.-w.g.)	(-) 7.3 (E-Note 2)	8	hrs/yr	24590-PTF-U0D-W16T-00001	E-Note 1
Abnormal Radiation Dose Rate (mR/hr)	255000 (E-Note 4)	0 (E-Note 7)	yrs	24590-PTF-U0D-W16T-00001	E-Note 1
Wet Sprinkler System Present	No	N/A	N/A	24590-PTF-U0D-W16T-00001	E-Note 1
Additional Abnormal Information	N/A				
Design Basis Events (DBE)					
DBE High Temperature (°F)	138	1000	hrs	24590-PTF-U0D-W16T-00001	E-Note 1
DBE Low Temperature (°F)	40	1000	hrs	24590-PTF-U0D-W16T-00001	E-Note 1
DBE High Relative Humidity (%RH)	100	482	hrs	24590-PTF-U0D-W16T-00001	E-Note 1
DBE Low Relative Humidity (%RH)	4	1000	hrs	24590-PTF-U0D-W16T-00001	E-Note 1
DBE High Pressure (in.-w.g.)	4 (E-Note 2)	1000	hrs	24590-PTF-U0D-W16T-00001	E-Note 1
DBE Low Pressure (in.-w.g.)	(-) 7.3 (E-Note 2)	1000	hrs	24590-PTF-U0D-W16T-00001	E-Note 1
DBE Radiation Dose Rate (mR/hr)	255000 (E-Note 4)	0 (E-Note 7)	yrs	24590-PTF-U0D-W16T-00001	E-Note 1
Flood Height (ft)	2.08	1000	hrs	24590-PTF-U0D-W16T-00001	E-Note 1
Submergence (ft)	N/A (E-Note 5)	N/A	N/A	N/A	N/A
Chemical/Spray Exposure	Yes	1000	hrs	24590-PTF-U0D-W16T-00001	E-Note 1
Additional DBE Information	N/A				

EQUIPMENT QUALIFICATION DATASHEET (EQD)

DBE Chemical Exposure Details	
DBE Chemical Types/Concentrations	Sodium Hydroxide (19M) Sodium Permanganate (1M) Strontium Nitrate (1M)

Interfaces (Electrical)	
Power Supply Voltage (VAC, VDC)	N/A
Power Supply Frequency (Hz)	N/A
Power Connection Method	N/A
I/O Signals to/from Equipment	N/A
I/O Connection Method	N/A

Interfaces (Mechanical)	
Mounting Configuration (orientation)	Vertical Mounted, Skirt, Located at 0'-0" in the Pre-Treatment Facility, Column Lines J and 11.5
Mounting Method (bolts, welds, etc.)	Welded skirt to ring beam welded to embedment plates. Embedment plate details per 24590-PTF-DD-S13T-00039, 24590-PTF-DD-S13T-00036, 24590-PTF-DD-S13T-00043, and 24590-PTF-DD-S13T-00045 provided to the vendor in the material requisition
Auxiliary Devices	Pulcs Jet Mixers: UFP-PJM-00001, UFP-PJM-00002, UFP-PJM-00003, UFP-PJM-00004, UFP-PJM-00044, UFP-PJM-00053, UFP-PJM-00105, UFP-PJM-00106, Auxiliary Devices are located within the vessel.

Equipment Seismic Qualification (ESQ)

Parameter	Title	Reference/Document Number	Version / Revision	Remarks
WTP Seismic Design Specification (BUYER)	Engineering Specification for Seismic Qualification of Seismic Category I/II Equipment and Tanks Engineering Specification for Seismic Qualification Criteria for Pressure Vessels	24590-WTP-3PS-SS90-T0001 24590-WTP-3PS-MV00-T0002	Rev 2 Rev 2	N/A
11 Specified Seismic Load (BUYER)	Seismic Analysis of Pretreatment Building - WSGM In-Structure Response Spectra (ISRS)	24590-PTF-S0C-S15T-00057	A	CCN 158079; WSGM ISRS Curves: 67, 68, 69
Design Seismic Load (SELLER	N/A	N/A	N/A	E-Note 3
Qualification Method (SELLER)	N/A	N/A	N/A	Dynamic Analysis utilizing response spectra curves
Qualification Report Number (SELLER)	N/A	N/A	N/A	E-Note 3
Submittal Number (BUYER)	N/A	N/A	N/A	N/A

EQUIPMENT QUALIFICATION DATASHEET (EQD)

Equipment Qualification Notes and Additional Information

E-Note 1: BNI (BUYER) shall perform Equipment Environmental Qualification in accordance with 24590-WTP-DC-ENG-06-001, Design Criteria for Equipment Seismic and Environmental Qualification.

E-Note 2: Where pressure is given in inches of water column (in-w.c.) in the source document, it is generally assumed that this is in reference to atmospheric pressure and is therefore equivalent to inches of water gage (in-w.g.).

E-Note 3: BNI (BUYER) shall perform Equipment Seismic Qualification in accordance with the listed parameters and the applicable specification requirements.

E-Note 4: Radiation Dose Rates are for determining shielding requirements only for the black cell and are not at the source (vessel). Since the vessel is all metallic and the source has no neutron components for material embrittlement, the dose rates are of no concern on the vessel or its subcomponents.

E-Note 5: Flood height is 2.08 ft above the floor, bottom of vessel is above this level therefore, no submergence evaluation is required.

E-Note 6: Environmental data shown are for the room only.

E-Note 7: Normal, Abnormal, and DBE dose rates are the same, therefore, abnormal & DBE doses do not add to total integrated dose based on normal dose rates over 40 years.

DOE Radioactive Materials Disclaimer:

Please note that source, special nuclear and byproduct materials, as defined in the Atomic Energy Act of 1954 (AEA), are regulated at the US Department of Energy (DOE) facilities exclusively by DOE acting pursuant to its AEA authority. DOE asserts, that pursuant to the AEA, it has sole and exclusive responsibility and authority to regulate source, special nuclear, and byproduct materials at DOE-owned nuclear facilities. Information contained herein on radionuclides is provided for process description purposes only.

Screening / Evaluation Required? If yes per 24590-WTP-GPP-SREG-002, E&NS signature required below	X	Yes		No

EQUIPMENT QUALIFICATION DATASHEET (EQD)

Approval

Rev	Description	System Engineer	Vessel Engineer	Checked	Reviewed	E&NS	Approved	Date
0	Issue for Purchase	P.A	H.K	US/CS	JJ	N/A	SK	10/20/02
1	Revised as noted	MA	HK	PA/CS	JJ	N/A	MWH	8/18/03
2	Revised as Noted	MA	HK	PA/CS	RES	N/A	MWH	11/14/03
3	Revised as Noted	M. Askar	H Khurana	P Aviguetero C Slater	J. Julyk	N/A	C. Morley for M Hoffmann	2/5/04
4	Added hydrodynamic loads and other revisions as noted.	M. Askar	H Khurana	P Aviguetero C Slater	J. Julyk	N/A	M Hoffmann	9/8/04
5	Added wear plates as noted.	M. Askar	H Khurana	P Aviguetero C Slater	J. Julyk	N/A	M Hoffmann	10/3/04
6	Added note 14 & 15, deleted note 10, revised note 12, added P&ID reference and changes as noted. Incorporated SDDR # 24590-WTP-SDDR-PROC-05-00227 by reference.	M. Askar	H Khurana	P Aviguetero C Slater	J. Julyk	N/A	M Hoffmann	03/02/05
7	Revised Notes on page 2 & 3 as noted	M. Askar	H. Khurana	MAP for C/S	RES	N/A	M Hoffmann	07/28/05
8	Revised per note 17 on page 2 and as noted.	M. Askar	H. Khurana	Jl Polani	C. Slater D. Adler	N/A	J. Julyk	10/28/05
9	Revised per Note 21, due to revised load conditions, new load conditions for MOB, single overblow, and revised process conditions	D Vo	M Seed	W Wilcox	B Makadia	G Hendricks	J Julyk	03/20/08
10	Revised per Note 29 & 30. Added Steam Spargers.	D Vo	M Seed	R Peters	R Davis	J Hinckley	J Julyk	01/16/09
11	Revised as noted by revision triangles. Added Nozzle Pressure and Temperature to Nozzle Table. Renumbered Equipment Qualification Notes to E-Note xyz for clarity to EQ Sections. Updated Cyclic data for Sparger	D Vo DVVo	M Seed MASeed	D Harris	D Adler RPHill RPHills	J Hinckley	J Julyk	8/24/09

ATTACHMENT 1: Page 1 of 2
REFERENCES for Data Sheets: 24590-PTF-MVD-UFP-00001 / 00002
Vessel Tag #'s: UFP-VSL-00001A / 00001B

(For BNI Use only)

Data	Document #	Rev	Document Title
Quality Level	24590-PTF-M6-UFP-00001001 24590-PTF-M6-UFP-00001004	0 0	*P&ID PTF Ultrafiltration Process System Feed Preparation Vessel UFP-VSL-00001A* *P&ID PTF Ultrafiltration Process System Feed Preparation Vessel UFP-VSL-00001B*
Seismic Category	24590-PTF-M6-UFP-00001001 24590-PTF-M6-UFP-00001004	0 0	*P&ID PTF Ultrafiltration Process System Feed Preparation Vessel UFP-VSL-00001A* *P&ID PTF Ultrafiltration Process System Feed Preparation Vessel UFP-VSL-00001B*
Design Specific Gravity	24590-WTP-RPT-ENG-07-007	0	*Process Stream Properties* / Section 4.18
Max Operating Volume	24590-PTF-M6C-UFP-00004	D	*Vessel Sizing Calculations for Ultrafiiltration Feed Preparation Vessels UFP-VSL-00001A/B,* / Sheet 25
Total Volume	24590-PTF-M6C-UFP-00004	D	*Vessel Sizing Calculations for Ultrafiiltration Feed Preparation Vessels UFP-VSL-00001A/B,* / Sheet 19
Inside Diameter	24590-PTF-M6C-UFP-00004	D	*Vessel Sizing Calculations for Ultrafiiltration Feed Preparation Vessels UFP-VSL-00001A/B,* / Sheet 24
Length TL-TL	24590-PTF-M6C-UFP-00004	D	*Vessel Sizing Calculations for Ultrafiiltration Feed Preparation Vessels UFP-VSL-00001A/B,* / Sheet 24
Operating Pressure Parent Vessel (external)	24590-PTF-M6C-PVP-00017	A	*HADCRT Analysis of PTF PVP System at various Operating Scenarios / (see sheet 14 - the PVP scrubber inlet is controlled to 35 in-wg)* External pressure of 1.5 psig is based on a normal operating pressure of -35 in WG (1.26 psig) with an additional margin. (24590-PTF-M5-V17T-00021001 & 00021004 indicate the process flow diagrams)
Operating Pressure Parent Vessel (internal)	N/A		Maximum value possible, assuming fans off, is atmospheric pressure
Design Pressure Parent Vessel (internal)	24590-WTP-DB-ENG-01-001		*Basis of Design* / Section 16.4.2.1
Design Pressure Parent Vessel (external)	24590-PTF-M6C-PVP-00017	A	*HADCRT Analysis of PTF PVP System at various Operating Scenarios /* External design pressure of 2.0 psig is based on a normal operating pressure of -35 in WG (1.26 psig) with an additional margin
Jacket Design Pressure (internal)	24590-PTF-MVC-10-00003	A	*PTF Vessel Cyclic Datasheet Inputs/* use 35 psig
Operating Temp (parent vessel)	CCN 187535	NA	DOE contract change from 100 C to 90 C, 90 degrees C is equivalent to 194 F
Design Temp (parent vessel)	CCN 187535	NA	DOE contract change from 100 C to 90 C for max operating condition use 100 C for design, 100 C equals 212F
Sparger Operation/Design	24590-PTF-M6X-UFP-00386 24590-PTF-M6X-UFP-00387 24590-PTF-M6X-UFP-00388 24590-PTF-M6X-UFP-00389	0 0 0 0	*MS Line List for 24590-PTF-M6-UFP-00034002* *MS Line List for 24590-PTF-M6-UFP-00034003* *MS Line List for 24590-PTF-M6-UFP-00034004* *MS Line List for 24590-PTF-M6-UFP-00034005*
Jacket Design Temp	N/A		Same as vessel
Corrosion Allowance, Erosion allowance	24590-PTF-N1D-UFP-00005	5	*Corrosion Evaluation UFP-VSL-00001A/B*
Materials of Construction	24590-PTF-N1D-UFP-00005	5	*Corrosion Evaluation UFP-VSL-00001A/B*
Design Pressure (PJM)	24590-PTF-M6X-UFP-00174 24590-PTF-M6X-UFP-00148	0 0	*MS Line List for P&ID 24590-PTF-M6-UFP-00008007* *MS Line List for P&ID 24590-PTF-M6-UFP-00007007*

ATTACHMENT 1: Page 2 of 2
REFERENCES for Data Sheets: 24590-PTF-MVD-UFP-00001 / 00002 (For BNI Use only)
Vessel Tag #'s: UFP-VSL-00001A / 00001B

Data	Document #	Rev	Document Title
Operating Pressure (PJM)	24590-QL-POA-MPE0-00002-25-03	00C	*PJM Datasheet JPP's* / PJM air pressure is 20 psig plus a 25% additional margin for 25 psig
Operating Temperature (PJM)	N/A		same as parent vessel
Cyclic Data (Vessel)	24590-PTF-MVC-10-00003 24590-PTF-MVE-10-00003 CCN 187535	C NA N/A	*PTF Vessel Cyclic Datasheet Inputs* *ECCN to incorporate steam sparging cycles* DOE contract change from 100 C to 90 C, 90 degrees C is equivalent to 194°F, use of 194°F for max operating temperature in place of the value in 24590-PTF-MVC-10-00003
Cyclic Data (PJM)	24590-PTF-MVC-10-00003 CCN 187535	A N/A	*PTF Vessel Cyclic Datasheet Inputs*/ sheet B-2 DOE contract change from 100 C to 90 C, 90 degrees C is equivalent to 194°F, use of 194°F for max operating temperature in place of the value in 24590-PTF-MVC-10-00003
Cyclic Data (Steam Spargers)	24590-PTF-MVE-10-00003	N/A	*ECCN to incorporate steam sparging cycles*
Operating conditions (Air)	24590-PTF-M6X-UFP-00386 24590-PTF-M6X-UFP-00387 24590-PTF-M6X-UFP-00388 24590-PTF-M6X-UFP-00389	0 0 0 0	*MS Line List for 24590-PTF-M6-UFP-00034002* *MS Line List for 24590-PTF-M6-UFP-00034003* *MS Line List for 24590-PTF-M6-UFP-00034004* *MS Line List for 24590-PTF-M6-UFP-00034005*
Operating Conditions (Steam)	24590-PTF-M6X-UFP-00386 24590-PTF-M6X-UFP-00387 24590-PTF-M6X-UFP-00388 24590-PTF-M6X-UFP-00389	0 0 0 0	*MS Line List for 24590-PTF-M6-UFP-00034002* *MS Line List for 24590-PTF-M6-UFP-00034003* *MS Line List for 24590-PTF-M6-UFP-00034004* *MS Line List for 24590-PTF-M6-UFP-00034005*
Hydrodynamic Loads	24590-WTP-MVC-50-00001	A	*Hydrodynamic Loads for Normal PJM Operation in Vessels with Newtonian Fluids*
Single PJM Overblow Loads	24590-WTP-MVC-50-00008	A	*Hydrodynamic Loads for PJM Overblow in Vessels with Non-Newtonian Fluids*
Single Overblow cycles	24590-PTF-MVE-10-00004	N/A	*Add PJM Overblow Frequency Assumption* / 2000 cycles used for conservatism
Multiple Overblow	24590-WTP-RPT-M-06-003	0	Summary Report: Hydrodynamic Loads for PJM Multiple Overblow Condition
Multiple Overblow Cycles	24590-PTF-MVE-10-00004	N/A	*Add PJM Overblow Frequency Assumption* / 400 cycles used for MOBs
Nozzle Loads	CCN 126187 CCN 126188 CCN 202057	N/A N/A N/A	Nozzle Loads for UFP-VSL-00001A Nozzle Loads for UFP-VSL-00001B Supplemental Design Nozzle Loads for UFP-VSL-00001A/B
Nozzle Design Pressures and Temperatures	24590-PTF-M6X-UFP-00148 24590-PTF-M6X-UFP-00174 24590-PTF-M6X-UFP-00288 24590-PTF-M6X-UFP-00291 24590-PTF-M6X-UFP-00429 24590-PTF-M6X-UFP-00301 24590-PTF-M6X-UFP-00306 24590-PTF-M6X-PWD-00113	0 0 0 0 0 0 0 2	MS LINE LIST FOR P&ID 24590-PTF-M6-UFP-00007007, REV. 0 MS LINE LIST FOR P&ID 24590-PTF-M6-UFP-00008007, REV. 0 MS LINE LIST FOR 24590-PTF-M6-UFP-00001001, REV. 0 MS LINE LIST FOR 24590-PTF-M6-UFP-00001002, REV. 0 MS LINE LIST FOR 24590-PTF-M6-UFP-00001005, REV. 0 MS LINE LIST FOR 24590-PTF-M6-UFP-00001004, REV. 0 PIPELINE LIST FOR P&ID 24590-PTF-M6-PWD-00046, REV. 2

Quarter Ending March 31, 2010 24590-PTF-PCN-ENV-09-005

Hanford Facility RCRA Permit Modification Notification Form

Part III, Operating Unit 10

Waste Treatment and Immobilization Plant

Index

Page 2 of 4: Hanford Facility RCRA Permit, Part III, Operating Unit 10, Waste Treatment and Immobilization Plant Update Piping and Instrumentation Diagrams (P&ID) for the PTF Ultrafiltration Process (UFP) System in Appendix 8.2 of the Dangerous Waste Permit (DWP).

Submitted by Co-Operator: Reviewed by ORP Program Office:

D. M. Busche — Date: 2/10/10 — G. A. Girard — Date: 2/24/10

Quarter Ending March 31, 2010 24590-PTF-PCN-ENV-09-005

Hanford Facility RCRA Permit Modification Notification Form	
Unit: **Waste Treatment and Immobilization Plant**	Permit Part: **Part III, Operating Unit 10**

Description of Modification:

The purpose of this Class 1 prime modification is to update the P&IDs for the PTF UFP System, in Appendix 8.2 of the DWP. The permit P&IDs currently incorporated into the DWP are being replaced with source P&IDs as indicated in the table below.

Appendix 8.2			
Replace:	24590-PTF-M6-UFP-P0016, Rev 0	With:	24590-PTF-M6-UFP-00016001, Rev 0
	24590-PTF-M6-UFP-P0017, Rev. 0		24590-PTF-M6-UFP-00017001, Rev 0
			24590-PTF-M6-UFP-00019001, Rev 0
			24590-PTF-M6-UFP-00019002, Rev 0
			24590-PTF-M6-UFP-00019003, Rev 0
			24590-PTF-M6-UFP-00019004, Rev 0
			24590-PTF-M6-UFP-00020001, Rev 0
			24590-PTF-M6-UFP-00020002, Rev 0
			24590-PTF-M6-UFP-00020003, Rev 0
			24590-PTF-M6-UFP-00020004, Rev 0
			24590-PTF-M6-UFP-00021001, Rev 0
			24590-PTF-M6-UFP-00021002, Rev 0
			24590-PTF-M6-UFP-00022001, Rev 0
			24590-PTF-M6-UFP-00022002, Rev 0
			24590-PTF-M6-UFP-00031001, Rev 0
			24590-PTF-M6-UFP-00031002, Rev 0
			24590-PTF-M6-UFP-00031003, Rev 0
			24590-PTF-M6-UFP-00032001, Rev 0
			24590-PTF-M6-UFP-00032002, Rev 0
			24590-PTF-M6-UFP-00032003, Rev 0

This modification requests Ecology approval and incorporation into the permit, the changes provided in applicable document change forms (e.g., DCNs) and changes associated with the resolution to comments on change documents since the issuance of the last revision of the permitted drawing. Revisions are the result of ongoing design changes.

The following identifies the significant changes to the drawings:

- Modified, deleted, and added notes, holds, and references
- Modified, identified, and added support/utility system racks, lines, valves, bulges, in-line components, instruments and logic controls
- Incorporated changes from change documents identified in the final note on P&ID
- Drawings converted from a single sheet to multi-sheet drawings
- Revised, identified, and added slope symbols and/or the slope requirement

Drawings in this PCN not previously submitted are the result of enhanced instrumentation and utilities, such as air purging to mitigate hydrogen gas generation (HPAV). These drawings do not change the permitted UFP waste treatment process.

Outstanding change document 24590-PTF-M6N-UFP-00107 has not been incorporated into this modification

and applies to the following P&IDs:

- 24590-PTF-M6-UFP-00016001
- 24590-PTF-M6-UFP-00017001

Outstanding change document 24590-PTF-M6LN-UFP-00005 has not been incorporated into this modification and applies to the following P&IDs:

- 24590-PTF-M6-UFP-00019002
- 24590-PTF-M6-UFP-00019003
- 24590-PTF-M6-UFP-00019004
- 24590-PTF-M6-UFP-00020002
- 24590-PTF-M6-UFP-00020003
- 24590-PTF-M6-UFP-00020004

Outstanding change document 24590-PTF-M6LN-UFP-00008 has not been incorporated into this modification and applies to the following P&IDs:

- 24590-PTF-M6-UFP-00019002

Outstanding change document 24590-PTF-M6LN-UFP-00015 has not been incorporated into this modification and applies to the following P&IDs:

- 24590-PTF-M6-UFP-00019002
- 24590-PTF-M6-UFP-00019004

Outstanding change document 24590-PTF-M6LN-UFP-00018 has not been incorporated into this modification and applies to the following P&IDs:

- 24590-PTF-M6-UFP-00016001
- 24590-PTF-M6-UFP-00017001

Outstanding change document 24590-PTF-M6PR-UFP-00002 has not been incorporated into this modification and applies to the following P&IDs:

- 24590-PTF-M6-UFP-00019001
- 24590-PTF-M6-UFP-00019002

Outstanding change document 24590-PTF-M6PR-10-00009 has not been incorporated into this modification and applies to the following P&IDs:

- 24590-PTF-M6-UFP-00019002
- 24590-PTF-M6-UFP-00019003
- 24590-PTF-M6-UFP-00019004
- 24590-PTF-M6-UFP-00020002
- 24590-PTF-M6-UFP-00020003
- 24590-PTF-M6-UFP-00020004

Outstanding change document 24590-PTF-M6PN-UFP-00001 has not been incorporated into this modification and applies to the following P&ID:

- 24590-PTF-M6-UFP-00020001

Outstanding change document 24590-PTF-M6PR-UFP-00006 has not been incorporated into this modification and applies to the following P&IDs:

Quarter Ending March 31, 2010 24590-PTF-PCN-ENV-09-005

- 24590-PTF-M6-UFP-00020001
- 24590-PTF-M6-UFP-00020002
- 24590-PTF-M6-UFP-00020003

Outstanding change document 24590-PTF-M6N-M80T-00057 has not been incorporated into this modification and applies to the following P&IDs:

- 24590-PTF-M6-UFP-00021001
- 24590-PTF-M6-UFP-00022001

WAC 173-303-830 Modification Class:	Class 1	Class [1]1	Class 2	Class 3
Please mark the Modification Class:		X		

Enter relevant WAC 173-303-830, Appendix I Modification citation number:

Enter wording of WAC 173-303-830, Appendix I Modification citation:

In accordance with WAC 173-303-830(4)(d)(i), this modification notification is requested to be reviewed and approved as a Class [1]1 modification. WAC 173-303-830(4)(d)(ii)(A) states, "Class 1 modifications apply to minor changes that keep the permit current with routine changes to the facility or its operation. These changes do not substantially alter the permit conditions or reduce the capacity of the facility to protect human health or the environment. In the case of Class 1 modifications, the director may require prior approval."

Modification Approved/Concur: [X] Yes [ ] Denied (state reason below)

Reason for denial:

Reviewed by Ecology:

K. Elsethagen 4-6-2010

Kelly Elsethagen Date

10-ESQ-055

Drawings:

24590-PTF-M6-UFP-00016001 - 1- Rev 0
24590-PTF-M6-UFP-00017001 - 1- Rev 0
24590-PTF-M6-UFP-00019001 - 1- Rev 0
24590-PTF-M6-UFP-00019002 - 1- Rev 0
24590-PTF-M6-UFP-00019003 - 1- Rev 0
24590-PTF-M6-UFP-00019004 - 1- Rev 0
24590-PTF-M6-UFP-00020001 - 1- Rev 0
24590-PTF-M6-UFP-00020002 - 1- Rev 0
24590-PTF-M6-UFP-00020003 - 1- Rev 0
24590-PTF-M6-UFP-00020004 - 1- Rev 0
24590-PTF-M6-UFP-00021001 - 1- Rev 0
24590-PTF-M6-UFP-00021002 - 1- Rev 0
24590-PTF-M6-UFP-00022001 - 1- Rev 0
24590-PTF-M6-UFP-00022002 - 1- Rev 0
24590-PTF-M6-UFP-00031001 - 1- Rev 0
24590-PTF-M6-UFP-00031002 - 1- Rev 0
24590-PTF-M6-UFP-00031003 - 1- Rev 0
24590-PTF-M6-UFP-00032001 - 1- Rev 0
24590-PTF-M6-UFP-00032002 - 1- Rev 0
24590-PTF-M6-UFP-00032003 - 1- Rev 0

This page intentionally left blank.

24590-PTF-M6-UFP-00016001

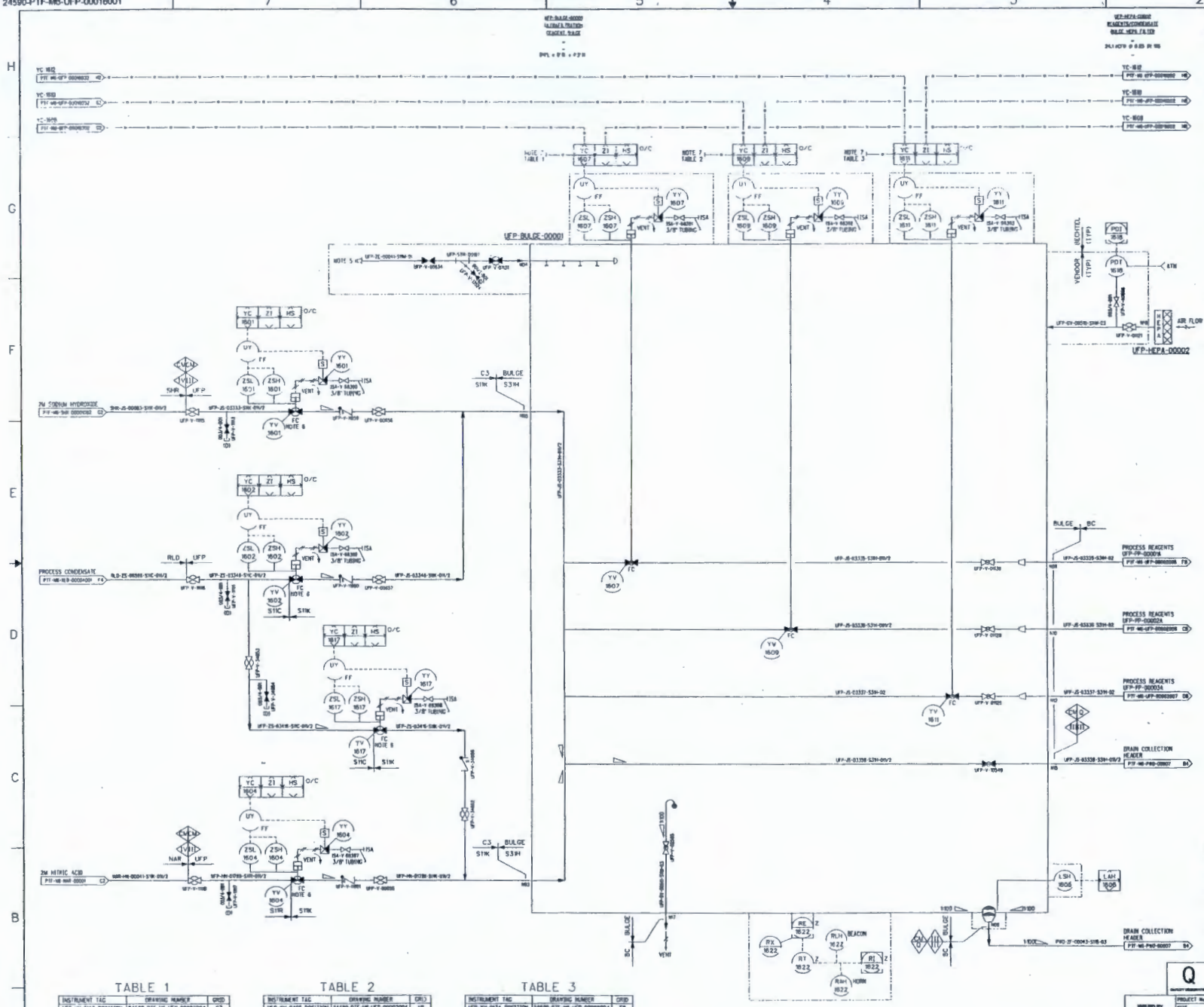

NOTES:

1. SEE DRAWING 24590-WTP-M6-50-00001 THROUGH 24590-WTP-M6-50-00008 FOR GENERAL NOTES, SYMBOLS AND LEGEND, AND GENERAL SLOPE REQUIREMENTS.
2. CONTENTS OF THIS DOCUMENT ARE DANGEROUS WASTE PERMIT AFFECTING.
3. THE PRESSURE BOUNDARY FOR ALL COMPONENTS ON THIS DRAWING IS QUALITY LEVEL CM AND SEISMIC CATEGORY SC-III, UNLESS OTHERWISE NOTED.
4. ALL LINES SHOWN ON THIS DRAWING SHALL BE FREE DRAINING EXCEPT BLACK CELL LINES WHICH ARE SELF-DRAINING, UNLESS OTHERWISE NOTED.
5. CONNECTION PROVIDED FOR REAGENTS, PLANT WASH, AND SERVICE AIR.
6. ON/OFF VALVES FOR NITRIC ACID, SODIUM HYDROXIDE, PLANT SERVICE AIR, AND PROCESS CONDENSATE HEADERS ARE INTERLOCKED FOR PROPER PROCESS SEQUENCING.
7. SEE TABLES 1, 2, OR 3 FOR INTERLOCK LOGIC CONNECTION THE REAGENT SUPPLY VALVE IN THE BULGE IS OPENED ONLY WHEN THE BACK PULSE VALVE, PERMEATE VALVE, AND PERMEATE TO UFP-VSL-00002A/B/C ARE CLOSED AND PULSE POT VOID VALVE IS OPENED.
8. THIS DRAWING IS CONVERTED FROM A SINGLE SHEET TO MULTI-SHEET DRAWINGS AND, IN PART, SUPERSEDES 24590-PTF-M6-UFP-00008 REV 2. THIS IS A MAJOR REVISION, NO REVISION CLOUDS ARE SHOWN. THIS DRAWING MAY INCLUDE INFORMATION FROM 24590-PTF-M6H-M6GT-00026, -00037, -00038, -00045, 24590-PTF-M6H-UFP-00055, -00099, -00168, AND 24590-WTP-SDOR-MS-08-00016.

HOLD/OPEN ITEMS:

NONE

REFERENCES:

1. THE REQUIRED OPERATIONAL SEQUENCES, PERMISSIVES, INTERLOCKS, ALARMS AND OPERATOR INTERFACE POINTS ARE FULLY DESCRIBED IN THE UFP SYSTEM LOGIC DIAGRAMS (FUTURE), THE UFP SYSTEM DESCRIPTION (FUTURE REVISION).

TABLE 1

INSTRUMENT TAG	DRAWING NUMBER	GRID
UFP-YV-0147 POSITION	24590-PTF-M6-UFP-00002004	C7
UFP-YV-0413 POSITION	24590-PTF-M6-UFP-00002005	C8
UFP-PDC-0148	24590-PTF-M6-UFP-00002004	D5
UFP-PDC-0414	24590-PTF-M6-UFP-00002005	F7
UFP-PSL-0176	24590-PTF-M6-UFP-00030005	G2
UFP-PSH-0319	24590-PTF-M6-UFP-00030005	G2

TABLE 2

INSTRUMENT TAG	DRAWING NUMBER	GRID
UFP-YV-0408 POSITION	24590-PTF-M6-UFP-00002004	H6
UFP-YV-0145 POSITION	24590-PTF-M6-UFP-00002004	F7
UFP-PDC-0409	24590-PTF-M6-UFP-00002004	G3
UFP-PDC-0141	24590-PTF-M6-UFP-00002004	D6
UFP-PSL-0178	24590-PTF-M6-UFP-00030005	G2
UFP-PSH-0321	24590-PTF-M6-UFP-00030005	H2

TABLE 3

INSTRUMENT TAG	DRAWING NUMBER	GRID
UFP-YV-0134 POSITION	24590-PTF-M6-UFP-00002004	E8
UFP-PDC-0135	24590-PTF-M6-UFP-00002004	D8
UFP-PSL-0180	24590-PTF-M6-UFP-00030005	G2
UFP-PSH-0323	24590-PTF-M6-UFP-00030005	G2

DRAWING INDEX

DWG NO	TITLE
24590-PTF-M6-UFP-00016001	ULTRAFILTRATION PROCESS SYSTEM UFP-BULGE-00001
24590-PTF-M6-UFP-00016002	ULTRAFILTRATION PROCESS SYSTEM UFP-BULGE-00001

REV	DESCRIPTION	ORG	CHKD	RVWD	APVD	DATE
0	ISSUED FOR CONSTRUCTION SEE NOTE 8					4/7/09

REVISION HISTORY

RIVER PROTECTION PROJECT
WASTE TREATMENT PLANT
2435 STEVENS CENTER PLACE
RICHLAND, WA 99354

CONTRACT No. DE-AC27-01RV14136

P&ID - PTF ULTRAFILTRATION PROCESS SYSTEM REAGENTS/CONDENSATE UFP-BULGE-00001

SIZE NONE | 24590-PTF-M6-UFP-00016001 | REV 0

PROJECT No. 24590
SITE HANFORD
AREA 200E
BUILDING No. 10

ORIGINATOR
CHECKER
APPROVER
REVIEWER

CONTENT APPLICABLE TO ALARAT: YES / NO
ADR NO. 24590-PTF-ADR-M-02-046 REV 1

SAFETY SCREEN REQUIREMENTS: CHK DWG INTPL F 45.1.2.3

SAFETY SCREEN & HAZARDS SUM: Drawing THIS DRAWING IS 24590-WTP-SDD-MS-08-00016

COMPUTER GENERATED - MANUAL CHANGES NOT PERMITTED

PDF TO: U:\PTF\M6\PROD\M6-M6
C:\USERS\MATTHEW.HARRISON\DESKTOP\M6-PROD-M6-M6

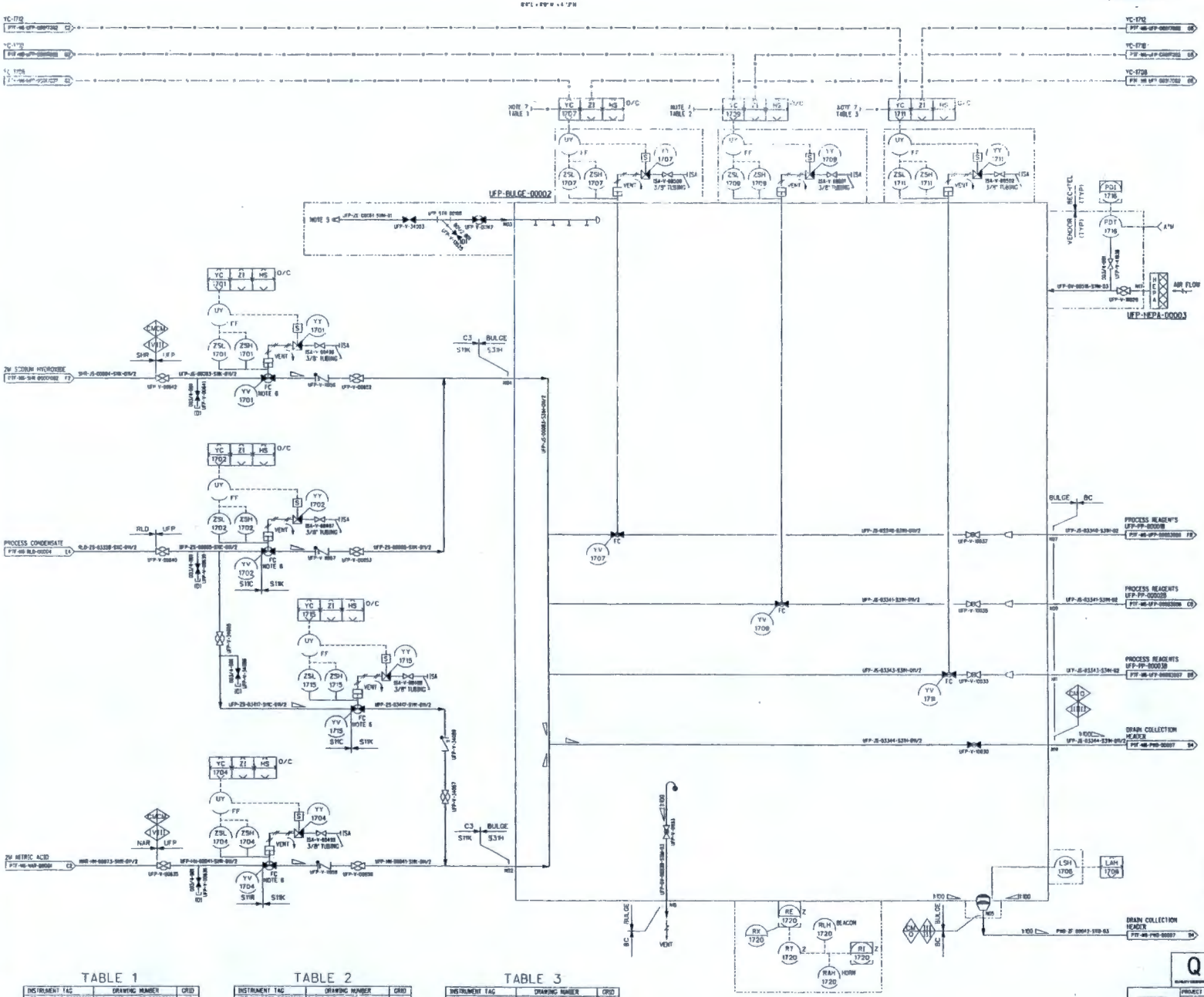

NOTES:

1. SEE DRAWING 24590-WTP-M6-50-00001 THROUGH 24590-WTP-M6-50-00008 FOR GENERAL NOTES, SYMBOLS AND LEGEND, AND GENERAL SLOPE REQUIREMENTS.
2. CONTENTS OF THIS DOCUMENT ARE DANGEROUS WASTE PERMIT AFFECTING.
3. THE PRESSURE BOUNDARY FOR ALL COMPONENTS ON THIS DRAWING IS QUALITY LEVEL CM AND SEISMIC CATEGORY SC-III, UNLESS OTHERWISE NOTED.
4. ALL LINES SHOWN ON THIS DRAWING SHALL BE FREE DRAINING, EXCEPT BLACK CELL LINES WHICH ARE SELF-DRAINING, UNLESS OTHERWISE NOTED.
5. CONNECTION PROVIDED FOR REAGENTS, PLANT WASH, AND SERVICE AIR.
6. ON/OFF VALVES FOR NITRIC ACID, SODIUM HYDROXIDE, PLANT SERVICE AIR, AND PROCESS CONDENSATE HEADERS ARE INTERLOCKED FOR PROPER PROCESS SEQUENCING.
7. SEE TABLES 1, 2, OR 3 FOR INTERLOCK LOGIC CONNECTION. THE REAGENT SUPPLY VALVE IN THE BULGE IS OPENED ONLY WHEN THE BACK PULSE VALVE, PERMEATE VALVE, AND PERMEATE TO UFP-VSL-00062A/B/C ARE CLOSED AND PULSE POT VOID VALVE IS OPENED.
8. THIS DRAWING IS CONVERTED FROM A SINGLE SHEET TO MULTI-SHEET DRAWINGS AND, IN PART, SUPERSEDES 24590-PTF-M6-UFP-00017 REV 2. THIS IS A MAJOR REVISION. NO REVISION CLOUDS ARE SHOWN. THIS DRAWING MAY INCLUDE INFORMATION FROM 24590-PTF-M6N-MBOT-00026, -00037, -00038, -00045, 24590-PTF-M6N-UFP-00055, -00099, -00106, AND 24590-WTP-SDDR-MS-08-00018.

HOLD/OPEN ITEMS:

NONE

REFERENCES:

1. THE REQUIRED OPERATIONAL SEQUENCES, PERMISSIVES, INTERLOCKS, ALARMS AND OPERATOR INTERFACE POINTS ARE FULLY DESCRIBED IN THE UFP SYSTEM LOGIC DIAGRAMS (FUTURE), THE UFP SYSTEM DESCRIPTION (FUTURE REVISION).

TABLE 1

INSTRUMENT TAG	DRAWING NUMBER	GRID
UFP-YV-0247 POSITION	24590-PTF-M6-UFP-00003004	G7
UFP-YV-0375 POSITION	24590-PTF-M6-UFP-00003005	H8
UFP-PDC-0248	24590-PTF-M6-UFP-00003004	F5
UFP-PDC-0378	24590-PTF-M6-UFP-00003005	F7
UFP-PSL-0278	24590-PTF-M6-UFP-00003006	D2
UFP-PSH-0307	24590-PTF-M6-UFP-00003006	D2

TABLE 2

INSTRUMENT TAG	DRAWING NUMBER	GRID
UFP-YV-0370 POSITION	24590-PTF-M6-UFP-00003004	G7
UFP-YV-0240 POSITION	24590-PTF-M6-UFP-00003004	F7
UFP-PDC-0373	24590-PTF-M6-UFP-00003004	G4
UFP-PDC-0241	24590-PTF-M6-UFP-00003004	D6
UFP-PSL 0278	24590-PTF-M6-UFP-00003006	D2
UFP-PSH-0309	24590-PTF-M6-UFP-00003012	H2

TABLE 3

INSTRUMENT TAG	DRAWING NUMBER	GRID
UFP-YV-0234 POSITION	24590-PTF-M6-UFP-00003004	E7
UFP-PDC-0235	24590-PTF-M6-UFP-00003004	E8
UFP-PSL-0280	24590-PTF-M6-UFP-00003011	D2
UFP-PSH-0311	24590-PTF-M6-UFP-00003012	E2

DRAWING INDEX

DWG NO	TITLE
24590-PTF-M6-UFP-00017001	ULTRAFILTRATION PROCESS SYSTEM UFP-BULGE-00002
24590-PTF-M6-UFP-00017002	ULTRAFILTRATION PROCESS SYSTEM UFP-BULGE-00002

REVISION HISTORY

REV	DESCRIPTION	ORG	CHKD	RVWD	APVD	DATE
0	ISSUED FOR CONSTRUCTION SEE NOTE 8					8/5/08

ISSUED BY RPP-WTP PDC

PROJECT No. 14590
SITE HANFORD
AREA ZONE
BUILDING No. 00

RIVER PROTECTION PROJECT
WASTE TREATMENT PLANT
2435 STEVENS CENTER PLACE
RICHLAND, WA 99354

CONTRACT No. DE-AC27-01RV14136

ORIGINATOR
CHECKER
APPROVER
REVIEWER

CONTENT APPLICABLE TO ALARM? ☐ YES ☒ NO
ADR NO. 24590-PTF-ADR-M-32-048 REV 1

P&ID - PTF
ULTRAFILTRATION PROCESS SYSTEM REAGENTS/CONDENSATE UFP-BULGE-00002

SCALE: NONE

24590-PTF-M6-UFP-00017001

REV 0

SAFETY SCREEN REQUIRED? ☐ YES ☒ NO

SAFETY SCREEN IS REQUIRED FOR DRAWING TYPES DEV/FDD IN 24590-WTP-GPP-ENG-002

SIZE = 44x34
COMPUTER GENERATED - MANUAL CHANGES NOT PERMITTED

10/29/2008 09:43:27 PM

24590 PTF-M8-UFP-00019001

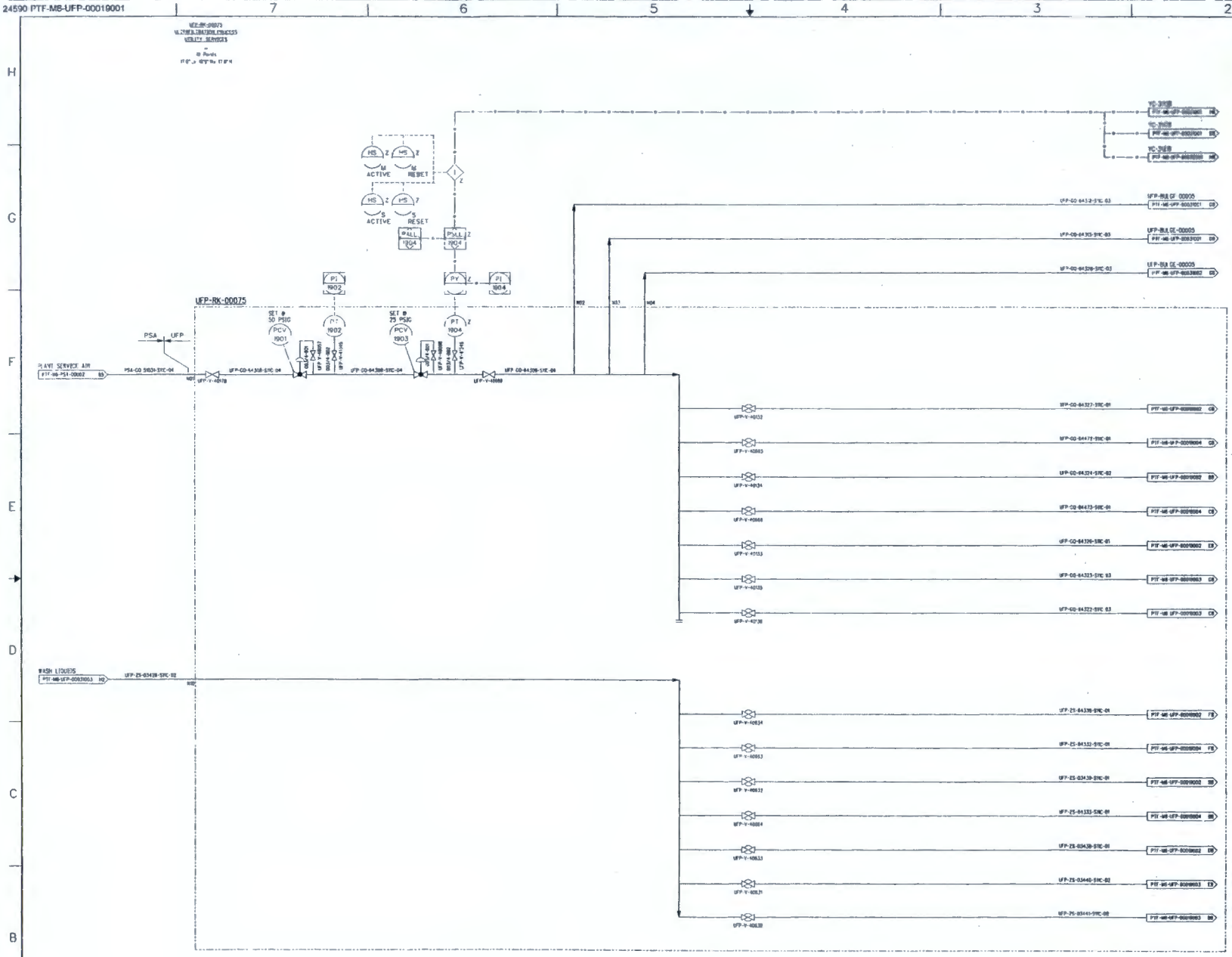

NOTES:

1. SEE DRAWINGS 24590-WTP-M8-S0-00001 THROUGH 24590-WTP-M8-S0-00008 FOR GENERAL NOTES, SYMBOLS AND LEGEND, AND GENERAL SLOPE REQUIREMENTS.
2. CONTENTS OF THIS DOCUMENT ARE DANGEROUS WASTE PERMIT AFFECTING.
3. THE PRESSURE BOUNDARY FOR ALL COMPONENTS ON THIS DRAWING IS QUALITY LEVEL Q AND SEISMIC CATEGORY NC-I, UNLESS OTHERWISE NOTED.
4. ALL LINES SHOWN ON THIS DRAWING SHALL BE FREE DRAINING, UNLESS OTHERWISE NOTED.
5. ON/OFF VALVES FOR PLANT SERVICE AIR AND PROCESS CONDENSATE HEADERS ARE INTERLOCKED FOR PROPER PROCESS SEQUENCING.
6. PLANT SERVICE AIR HEADER PRESSURE LOW IS INTERLOCKED TO CLOSE IMPORTANT TO SAFETY AIR PURGE VALVES, IN THE BULGE.

HOLD/OPEN ITEMS:

NONE

REFERENCES:

1. THE REQUIRED OPERATIONAL SEQUENCES, PERMISSIVES, INTERLOCKS, ALARMS, AND OPERATOR INTERFACE POINTS ARE FULLY DESCRIBED IN THE UFP SYSTEM LOGIC DIAGRAMS (FUTURE), AND THE UFP SYSTEM DESCRIPTION (FUTURE REVISION).

DRAWING INDEX

DWG NO	TITLE
24590-PTF-M8-UFP-00019001	ULTRAFILTRATION PROCESS SYSTEM UFP-RK-00075
24590-PTF-M8-UFP-00019002	ULTRAFILTRATION PROCESS SYSTEM UFP-RK-00075
24590-PTF-M8-UFP-00019003	ULTRAFILTRATION PROCESS SYSTEM UFP-RK-00075
24590-PTF-M8-UFP-00019004	ULTRAFILTRATION PROCESS SYSTEM UFP-RK-00075

REVISION HISTORY

REV	DESCRIPTION	ORG	CHKD	REVWD	APVD	DATE
0	ISSUED FOR CONSTRUCTION					11/4/08

Q

PROJECT No. 24590
SITE HANFORD
AREA 200E
BUILDING No. 12

RIVER PROTECTION PROJECT
WASTE TREATMENT PLANT
2435 STEVENS CENTER PLACE
RICHLAND, WA 99354

CONTRACT No: DE-AC27-01RV14136

P&ID - PTF
ULTRAFILTRATION PROCESS SYSTEM
UTILITY SERVICES
UFP-RK-00075

SCALE: NONE

24590-PTF-M8-UFP-00019001 REV 0

CONTENT APPLICABLE TO ALARA? YES NO
ADR NO. 24590-PTF-ADR-M-02-045 REV. 4
SAFETY SCREEN REQUIRED? YES NO
SAFETY SCREEN IS REQUIRED FOR DRAWING TYPES IDENTIFIED IN 24590-WTP-GPP-ENG-000
C SIZE - 22x34
COMPUTER GENERATED - MANUAL CHANGES NOT PERMITTED

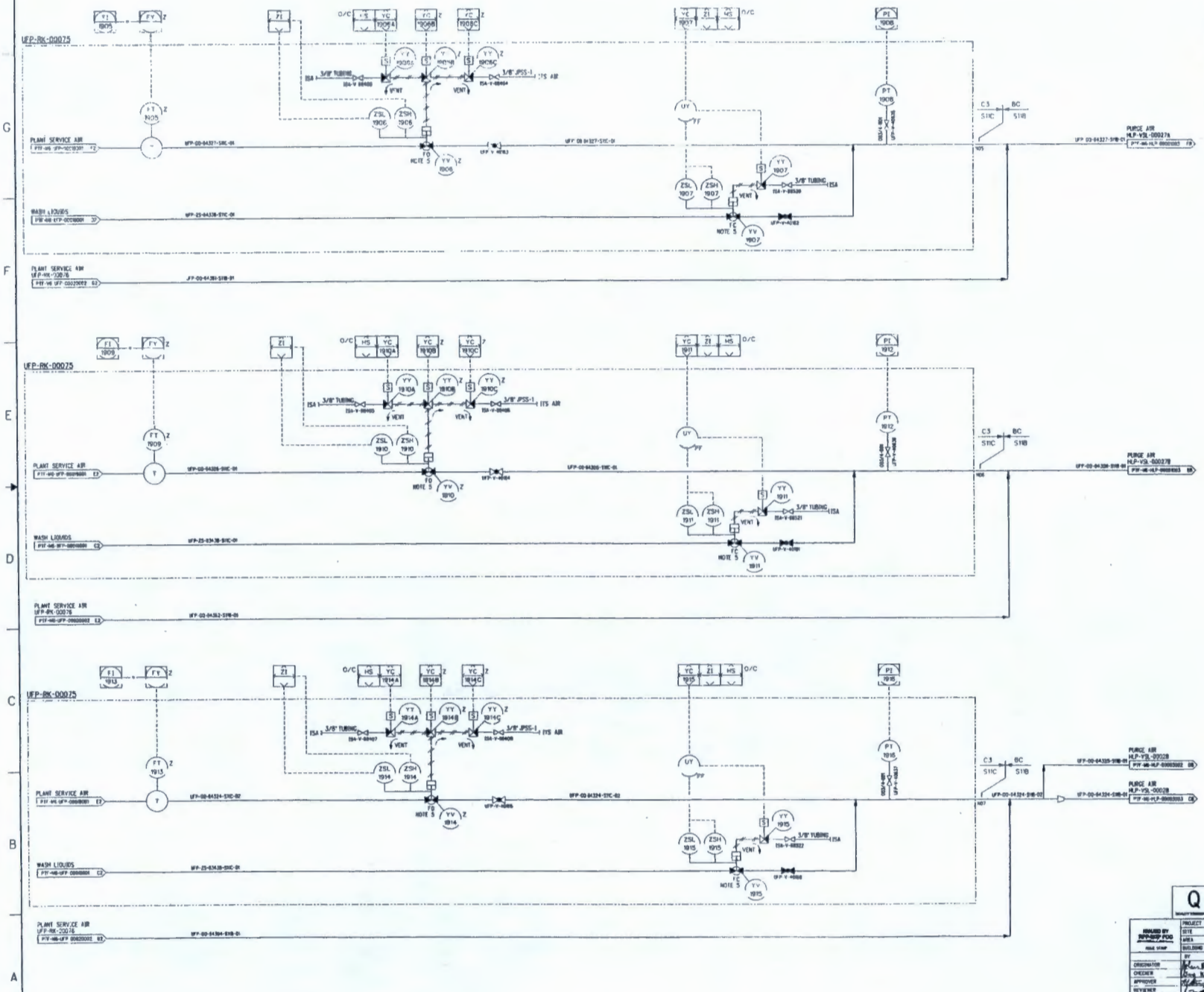

NOTES:

1. SEE DRAWINGS 24590-WTP-MB-50-00001 THROUGH 24590-WTP-MB-50-00008 FOR GENERAL NOTES, SYMBOLS AND LEGEND, AND GENERAL SLOPE REQUIREMENTS.
2. CONTENTS OF THIS DOCUMENT ARE DANGEROUS WASTE PERMIT AFFECTING.
3. THE PRESSURE BOUNDARY FOR ALL COMPONENTS ON THIS DRAWING IS QUALITY LEVEL Q AND SEISMIC CATEGORY SC-I, UNLESS OTHERWISE NOTED.
4. ALL LINES SHOWN ON THIS DRAWING SHALL BE FREE DRAINING, EXCEPT BLACK CELL LINES WHICH ARE SELF-DRAINING, UNLESS OTHERWISE NOTED.
5. ON/OFF VALVES FOR PLANT SERVICE AIR AND PROCESS CONDENSATE HEADERS ARE INTERLOCKED FOR PROPER PROCESS SEQUENCING.

HOLD/OPEN ITEMS:

NONE

REFERENCES:

1. THE REQUIRED OPERATIONAL SEQUENCES, PERMISSIVES, INTERLOCKS, ALARMS, AND OPERATOR INTERFACE POINTS ARE FULLY DESCRIBED IN THE UFP SYSTEM LOGIC DIAGRAMS (FUTURE) AND THE UFP SYSTEM DESCRIPTION (FUTURE REVISION).

REV	DESCRIPTION	DRG	CHKD	RVWD	APVD	DATE
0	ISSUED FOR CONSTRUCTION					11/05

REVISION HISTORY

RIVER PROTECTION PROJECT
WASTE TREATMENT PLANT
2435 STEVENS CENTER PLACE
RICHLAND, WA 99354

CONTRACT No: DE-AC27-01RV14136

P&ID - PTF
ULTRAFILTRATION PROCESS SYSTEM
UTILITY SERVICES
UFP-RK-00075

SCALE: NONE

24590-PTF-M6-UFP-00019002

REV 0

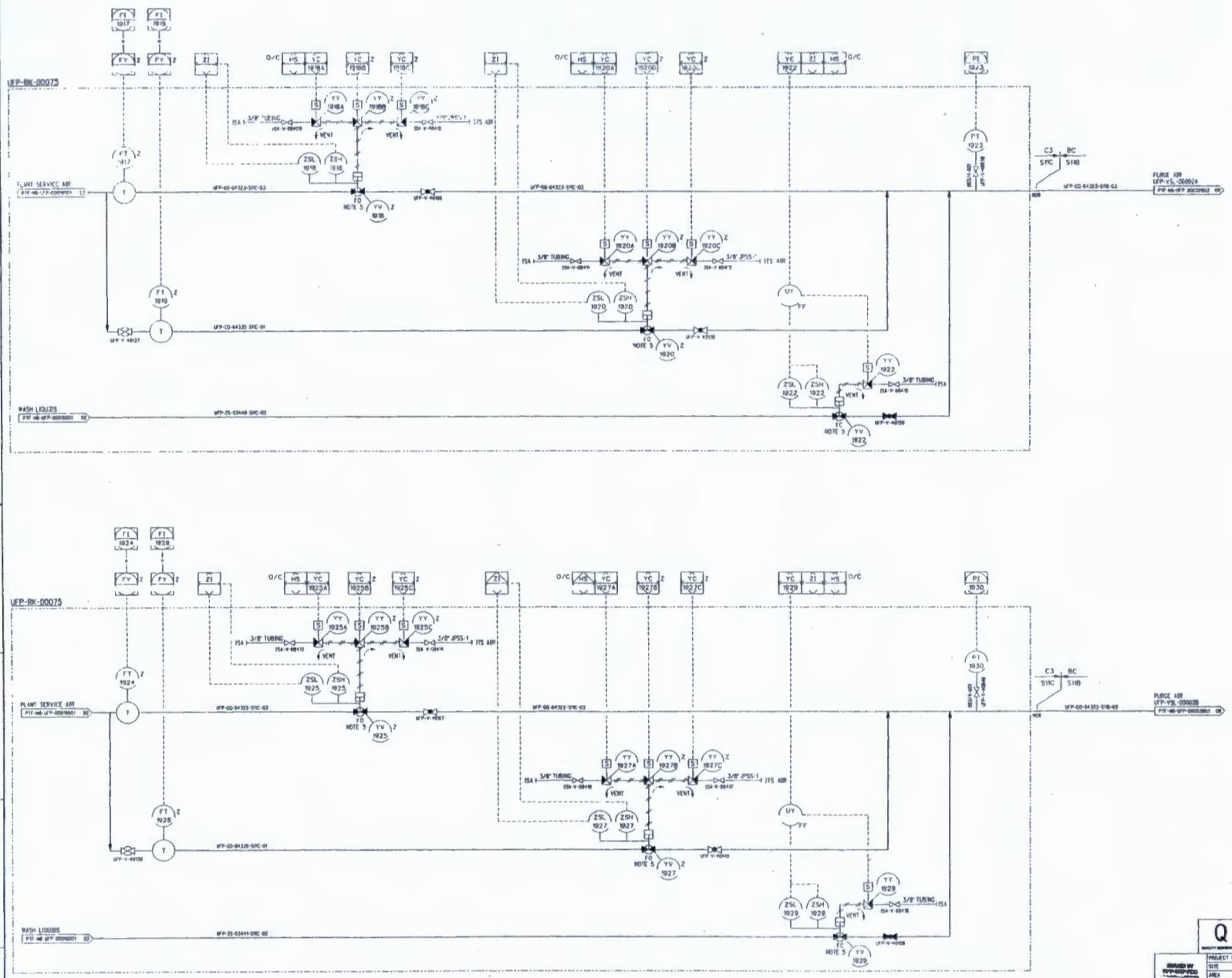

NOTES:

1. SEE DRAWINGS 24590-WTP-M6-50-00001 THROUGH 24590-WTP-M6-50-00008 FOR GENERAL NOTES, SYMBOLS AND LEGEND, AND GENERAL SLOPE REQUIREMENTS.
2. CONTENTS OF THIS DOCUMENT ARE DANGEROUS WASTE PERMIT AFFECTING.
3. THE PRESSURE BOUNDARY FOR ALL COMPONENTS ON THIS DRAWING IS QUALITY LEVEL 2 AND SEISMIC CATEGORY SC-I, UNLESS OTHERWISE NOTED.
4. ALL LINES SHOWN ON THIS DRAWING SHALL BE FREE DRAINING, EXCEPT BLACK CELL LINES WHICH ARE SELF-DRAINING, UNLESS OTHERWISE NOTED.
5. ON/OFF VALVES FOR PLANT SERVICE AIR AND PROCESS CONDENSATE HEADERS ARE INTERLOCKED FOR PROPER PROCESS SEQUENCING.

HOLD/OPEN ITEMS:

NONE

REFERENCES:

1. THE REQUIRED OPERATIONAL SEQUENCES, PERMISSIVES, INTERLOCKS, ALARMS, AND OPERATOR INTERFACE POINTS ARE FULLY DESCRIBED IN THE UFP SYSTEM LOGIC DIAGRAMS (FUTURE) AND THE UFP SYSTEM DESCRIPTION (FUTURE REVISION).

REV	DESCRIPTION	ORG	CHKD	RVWD	APVD	DATE
3	ISSUED FOR CONSTRUCTION					

REVISION HISTORY

RIVER PROTECTION PROJECT
WASTE TREATMENT PLANT
2435 STEVENS CENTER PLACE
RICHLAND, WA 99354

CONTRACT No: DE-AC27-01RV14136

P&ID - PTF
ULTRAFILTRATION PROCESS SYSTEM
UTILITY SERVICES
UFP-RK-00075

SCALE: NONE

24590-PTF-M6-UFP-00019003

REV 0

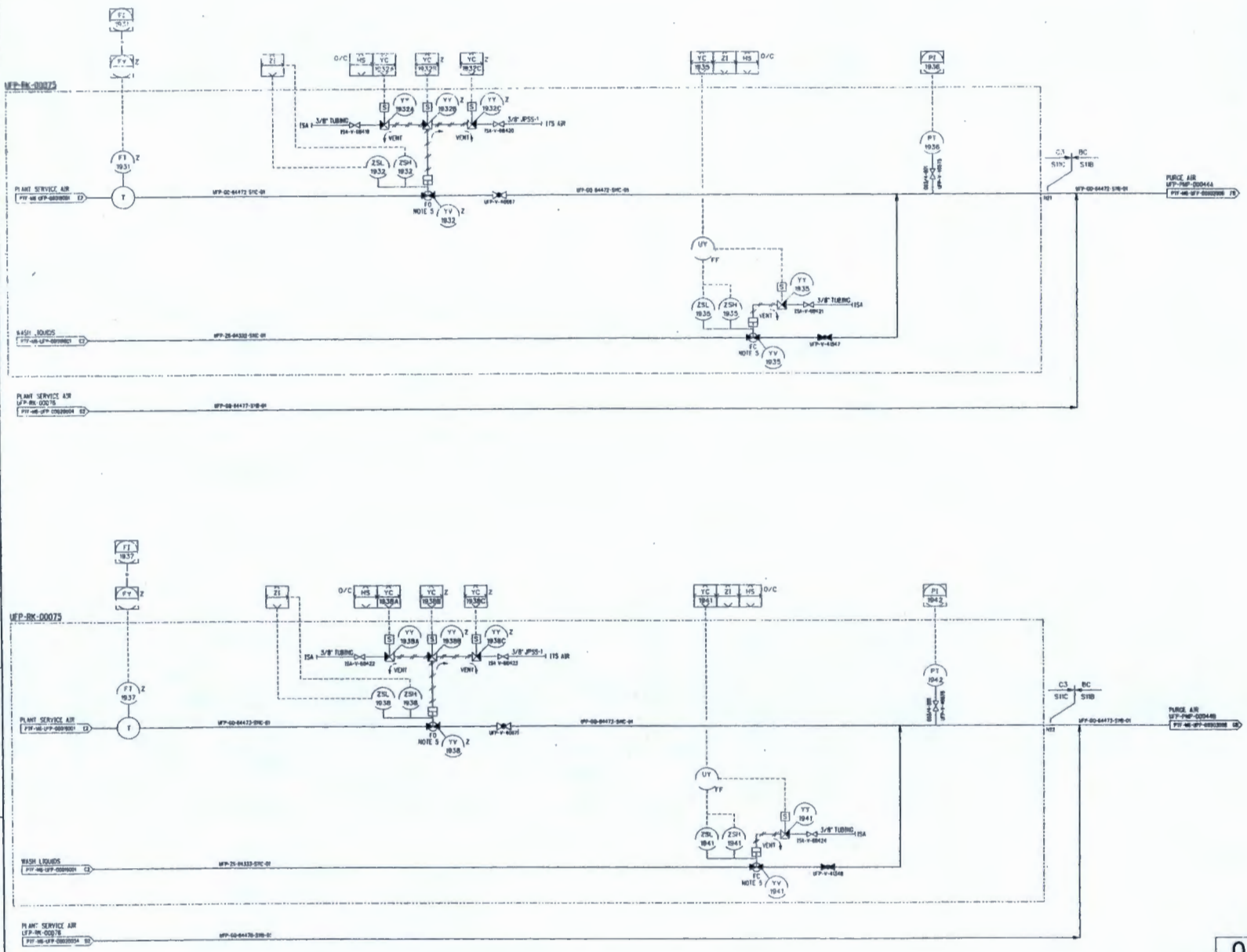

NOTES:

1. SEE DRAWINGS 24590-WTP-M6-50-00001 THROUGH 24590-WTP-M6-50-00008 FOR GENERAL NOTES, SYMBOLS AND LEGEND, AND GENERAL SLOPE REQUIREMENTS.
2. CONTENTS OF THIS DOCUMENT ARE DANGEROUS WASTE PERMIT AFFECTING.
3. THE PRESSURE BOUNDARY FOR ALL COMPONENTS ON THIS DRAWING IS QUALITY LEVEL Q AND SEISMIC CATEGORY SC-I, UNLESS OTHERWISE NOTED.
4. ALL LINES SHOWN ON THIS DRAWING SHALL BE FREE DRAINING, EXCEPT BLACK CELL LINES WHICH ARE SELF-DRAINING, UNLESS OTHERWISE NOTED.
5. ON/OFF VALVES FOR PLANT SERVICE AIR AND PROCESS CONDENSATE HEADERS ARE INTERLOCKED FOR PROPER PROCESS SEQUENCING.

HOLD/OPEN ITEMS:

NONE

REFERENCES:

1. THE REQUIRED OPERATIONAL SEQUENCES, PERMISSIVES, INTERLOCKS, ALARMS, AND OPERATOR INTERFACE POINTS ARE FULLY DESCRIBED IN THE UFP SYSTEM LOGIC DIAGRAMS (FUTURE) AND THE UFP SYSTEM DESCRIPTION (FUTURE REVISION).

REV	DESCRIPTION	ORG	CHKD	RVWD	APVD	DATE
0	ISSUED FOR CONSTRUCTION					

REVISION HISTORY

RIVER PROTECTION PROJECT
WASTE TREATMENT PLANT
2435 STEVENS CENTER PLACE
RICHLAND, WA 99354

CONTRACT No. DE-AC27-01RV14136

P&ID - PTF
ULTRAFILTRATION PROCESS SYSTEM
UTILITY SERVICES
UFP-RK-00075

SCALE: NONE

24590-PTF-M6-UFP-00019004 REV 0

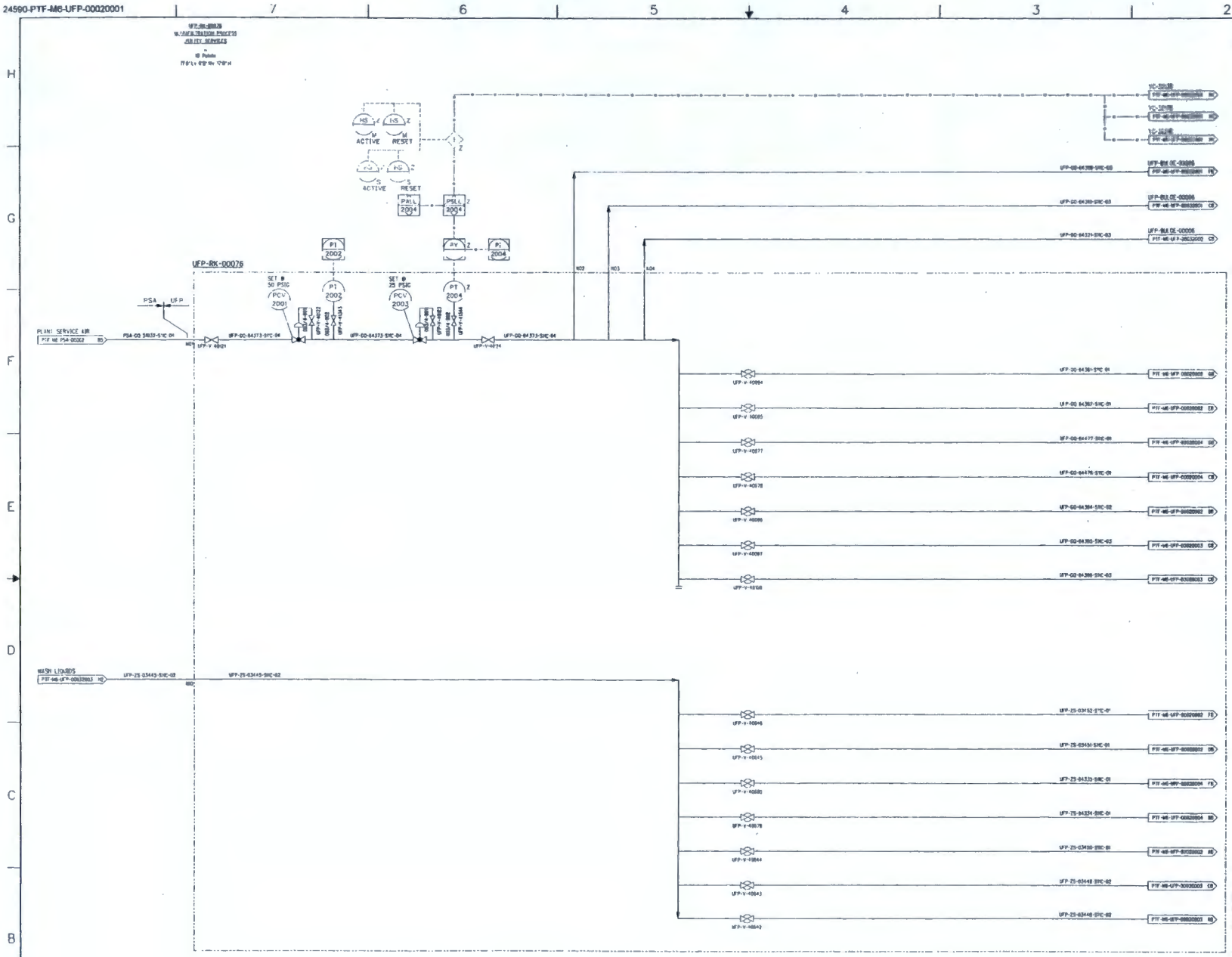

NOTES:

1. SEE DRAWINGS 24590-WTP-M6-SO-00001 THROUGH 24590-WTP-M6-SO-00008 FOR GENERAL NOTES, SYMBOLS AND LEGEND, AND GENERAL SLOPE REQUIREMENTS.
2. CONTENTS OF THIS DOCUMENT ARE DANGEROUS WASTE PERMIT AFFECTING.
3. THE PRESSURE BOUNDARY FOR ALL COMPONENTS ON THIS DRAWING IS QUALITY LEVEL Q AND SEISMIC CATEGORY SC-I, UNLESS OTHERWISE NOTED.
4. ALL LINES SHOWN ON THIS DRAWING SHALL BE FREE DRAINING, UNLESS OTHERWISE NOTED
5. ON/OFF VALVES FOR PLANT SERVICE AIR AND PROCESS CONDENSATE HEADERS ARE INTERLOCKED FOR PROPER PROCESS SEQUENCING.
6. PLANT SERVICE AIR HEADER PRESSURE LOW IS INTERLOCKED TO CLOSE IMPORTANT TO SAFETY AIR PURGE VALVES. IN THE BULGE.

HOLD/OPEN ITEMS:

NONE

REFERENCES:

1. THE REQUIRED OPERATIONAL SEQUENCES, PERMISSIVES, INTERLOCKS, ALARMS, AND OPERATOR INTERFACE POINTS ARE FULLY DESCRIBED IN THE UFP SYSTEM LOGIC DIAGRAMS (FUTURE) AND THE UFP SYSTEM DESCRIPTION (FUTURE REVISION).

DRAWING INDEX

DWG NO	TITLE
24590-PTF-M6-UFP-00020001	ULTRAFILTRATION PROCESS SYSTEM UFP-RK-00076
24590-PTF-M6-UFP-00020002	ULTRAFILTRATION PROCESS SYSTEM UFP-RK-00076
24590-PTF-M6-UFP-00020003	ULTRAFILTRATION PROCESS SYSTEM UFP-RK-00076
24590-PTF-M6-UFP-00020004	ULTRAFILTRATION PROCESS SYSTEM UFP-RK-00076

Q

REV	DESCRIPTION	ORG	CHKD	RVWD	APVD	DATE
0	ISSUED FOR CONSTRUCTION					11/6/08

REVISION HISTORY

RIVER PROTECTION PROJECT
WASTE TREATMENT PLANT
2435 STEVENS CENTER PLACE
RICHLAND, WA 99354

CONTRACT No. DE-AC27-01RV14136

P&ID - PTF
ULTRAFILTRATION PROCESS SYSTEM
UTILITY SERVICES
UFP-RK-00076

SCALE: NONE

24590-PTF-M6-UFP-00020001 REV 0

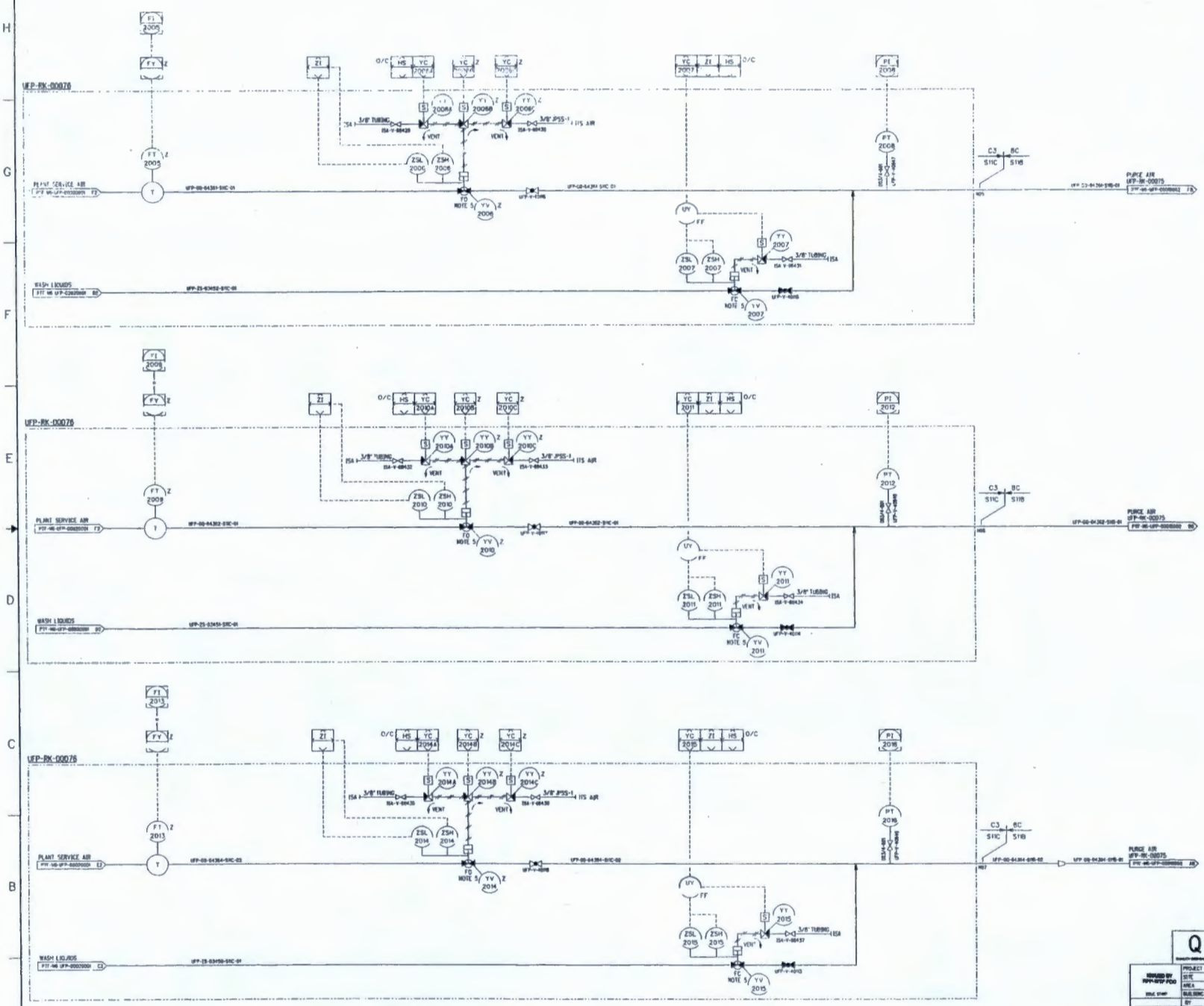

NOTES:

1. SEE DRAWINGS 24590-WTP-M6-S0-00001 THROUGH 24590-WTP-M6-S0-00008 FOR GENERAL NOTES, SYMBOLS AND LEGEND, AND GENERAL SLOPE REQUIREMENTS.
2. CONTENTS OF THIS DOCUMENT ARE DANGEROUS WASTE PERMIT AFFECTING.
3. THE PRESSURE BOUNDARY FOR ALL COMPONENTS ON THIS DRAWING IS QUALITY LEVEL Q AND SEISMIC CATEGORY SC-I, UNLESS OTHERWISE NOTED
4. ALL LINES SHOWN ON THIS DRAWING SHALL BE FREE DRAINING, EXCEPT BLACK CELL LINES WHICH ARE SELF-DRAINING, UNLESS OTHERWISE NOTED.
5. ON/OFF VALVES FOR PLANT SERVICE AIR AND PROCESS CONDENSATE HEADERS ARE INTERLOCKED FOR PROPER PROCESS SEQUENCING.

HOLD/OPEN ITEMS:

NONE

REFERENCES:

1. THE REQUIRED OPERATIONAL SEQUENCES, PERMISSIVES, INTERLOCKS, ALARMS, AND OPERATOR INTERFACE POINTS ARE FULLY DESCRIBED IN THE UFP SYSTEM LOGIC DIAGRAMS (FUTURE) AND THE UFP SYSTEM DESCRIPTION (FUTURE REVISION).

REV	DESCRIPTION	ORG	CHKD	REVWD	APVD	DATE
0	ISSUED FOR CONSTRUCTION					

REVISION HISTORY

RIVER PROTECTION PROJECT
WASTE TREATMENT PLANT
2435 STEVENS CENTER PLACE
RICHLAND, WA 99354

CONTRACT No DE-AC27-01RV14136

P&ID - PTF
ULTRAFILTRATION PROCESS SYSTEM
UTILITY SERVICES
UFP-RK-00076

SCALE: NONE

24590-PTF-M6-UFP-00020002 REV 0

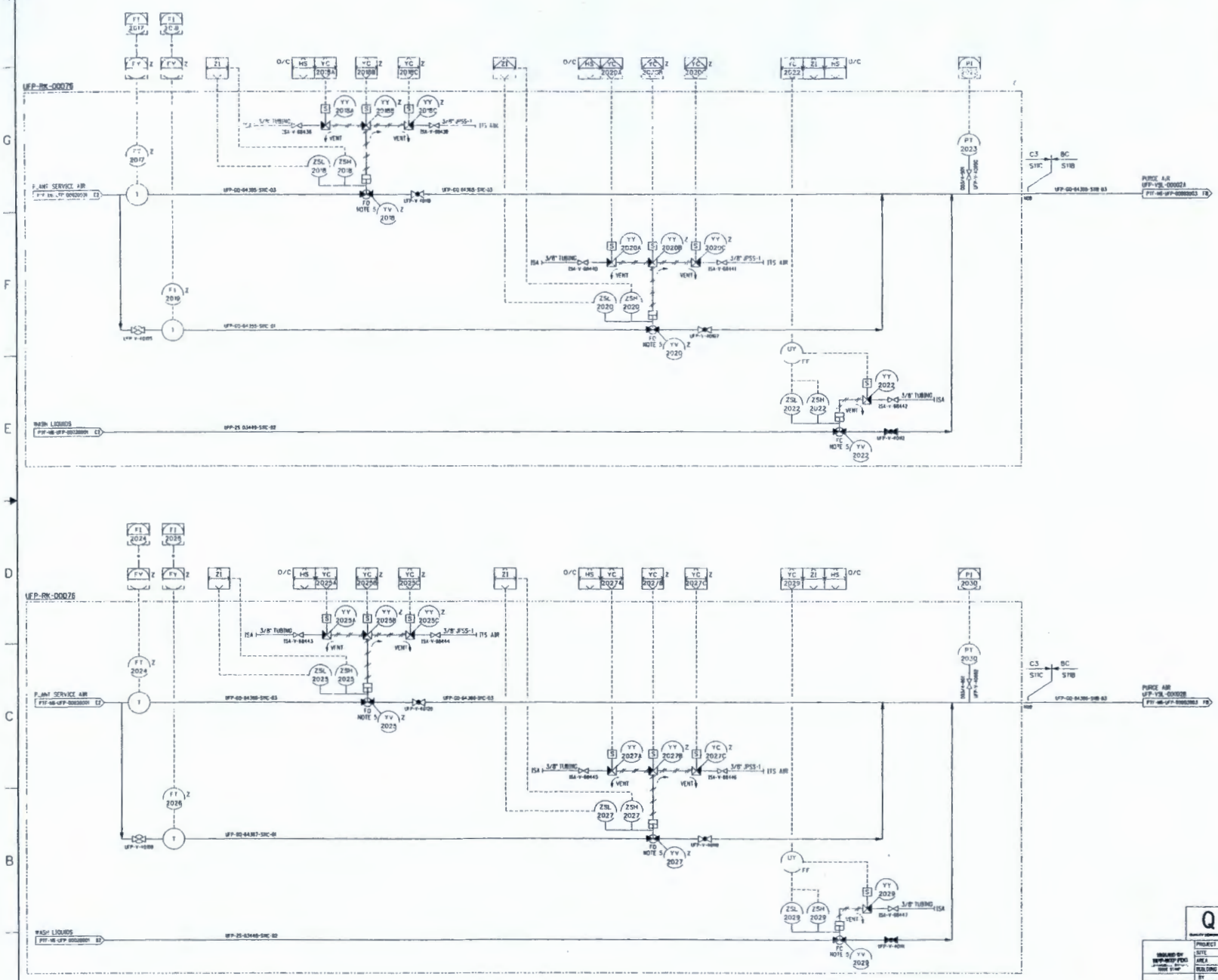

NOTES:

1. SEE DRAWINGS 24590-WTP-M6-S0-03001 THROUGH 24590-WTP-M6-S0-00008 FOR GENERAL NOTES, SYMBOLS AND LEGEND, AND GENERAL SLOPE REQUIREMENTS.
2. CONTENTS OF THIS DOCUMENT ARE DANGEROUS WASTE PERMIT AFFECTING
3. THE PRESSURE BOUNDARY FOR ALL COMPONENTS ON THIS DRAWING IS QUALITY LEVEL Q AND SEISMIC CATEGORY SC-I, UNLESS OTHERWISE NOTED.
4. ALL LINES SHOWN ON THIS DRAWING SHALL BE FREE DRAINING, EXCEPT BLACK CELL LINES WHICH ARE SELF-DRAINING, UNLESS OTHERWISE NOTED.
5. ON/OFF VALVES FOR PLANT SERVICE AIR AND PROCESS CONDENSATE HEADERS ARE INTERLOCKED FOR PROPER PROCESS SEQUENCING.

HOLD/OPEN ITEMS:

NONE

REFERENCES:

1. THE REQUIRED OPERATIONAL SEQUENCES, PERMISSIVES, INTERLOCKS, ALARMS, AND OPERATOR INTERFACE POINTS ARE FULLY DESCRIBED IN THE UFP SYSTEM LOGIC DIAGRAMS (FUTURE) AND THE UFP SYSTEM DESCRIPTION (FUTURE REVISION).

REV	DESCRIPTION	ORG	CHKD	RVWD	APVD	DATE
0	ISSUED FOR CONSTRUCTION					

REVISION HISTORY

RIVER PROTECTION PROJECT
WASTE TREATMENT PLANT
2435 STEVENS CENTER PLACE
RICHLAND, WA 99354

CONTRACT No. DE-AC27-01RV14136

P&ID - PTF
ULTRAFILTRATION PROCESS SYSTEM
UTILITY SERVICES
UFP-RK-00076

24590-PTF-M6-UFP-00020003

REV 0

SCALE NONE

24590-PTF-M6-UFP-00020004

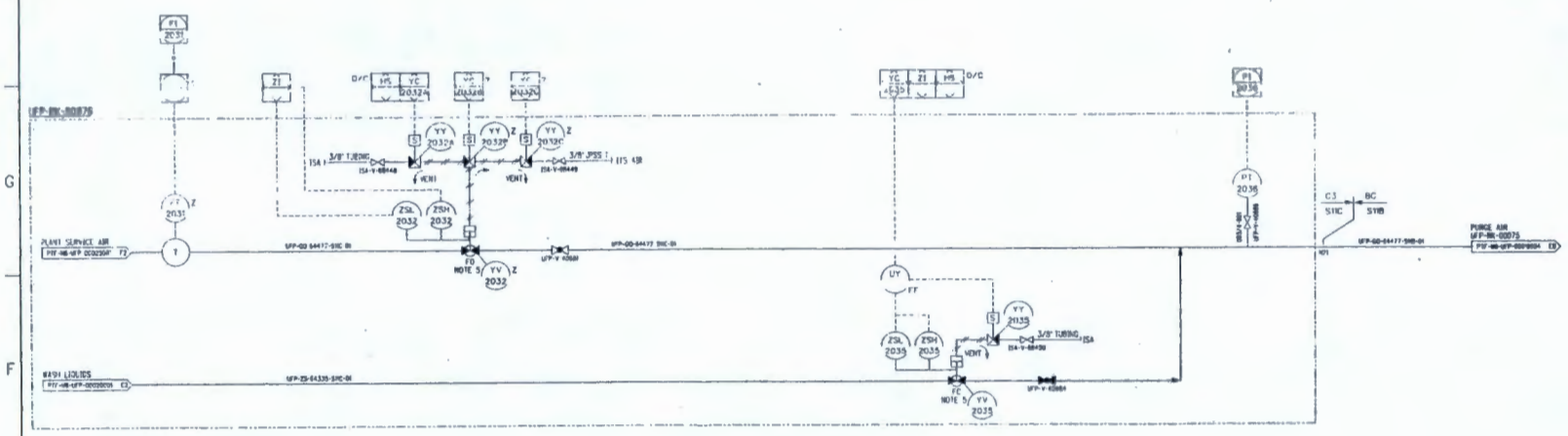

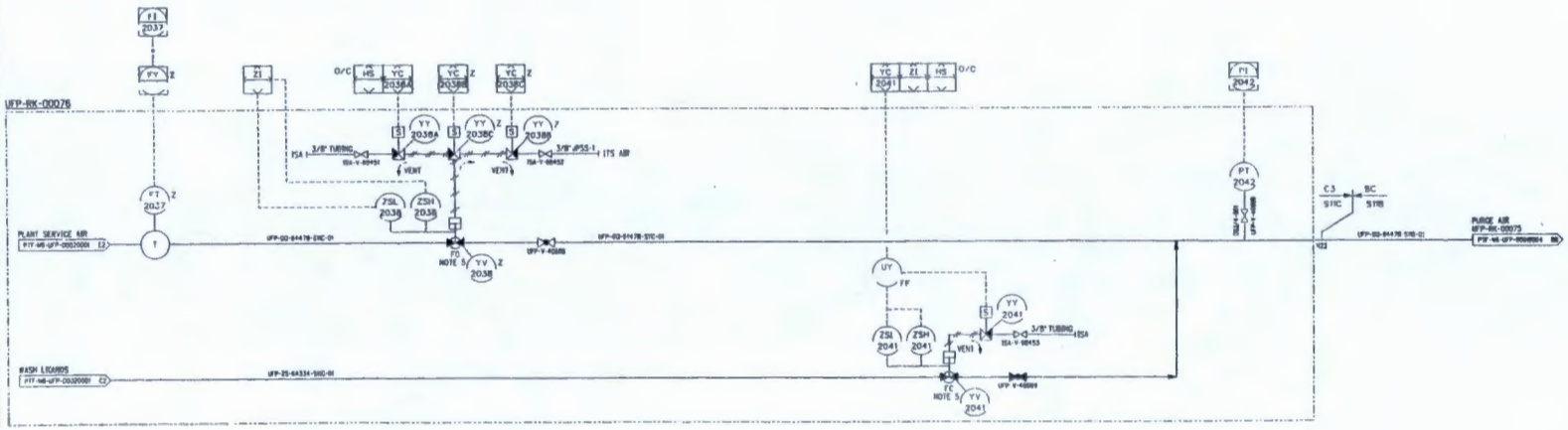

NOTES:

1. SEE DRAWINGS 24590-WTP-M6-50-00001 THROUGH 24590-WTP-M6-50-00008 FOR GENERAL NOTES, SYMBOLS AND LEGEND, AND GENERAL SLOPE REQUIREMENTS.
2. CONTENTS OF THIS DOCUMENT ARE DANGEROUS WASTE PERMIT AFFECTING.
3. THE PRESSURE BOUNDARY FOR ALL COMPONENTS ON THIS DRAWING IS QUALITY LEVEL Q AND SEISMIC CATEGORY SC-I, UNLESS OTHERWISE NOTED.
4. ALL LINES SHOWN ON THIS DRAWING SHALL BE FREE DRAINING, EXCEPT BLACK CELL LINES WHICH ARE SELF DRAINING, UNLESS OTHERWISE NOTED.
5. ON/OFF VALVES FOR PLANT SERVICE AIR AND PROCESS CONDENSATE HEADERS ARE INTERLOCKED FOR PROPER PROCESS SEQUENCING.

HOLD/OPEN ITEMS:

NONE

REFERENCES:

1. THE REQUIRED OPERATIONAL SEQUENCES, PERMISSIVES, INTERLOCKS, ALARMS, AND OPERATOR INTERFACE POINTS ARE FULLY DESCRIBED IN THE UFP SYSTEM LOGIC DIAGRAMS (FUTURE) AND THE UFP SYSTEM DESCRIPTION (FUTURE REVISION).

Q

REV	DESCRIPTION	ORG	CHKD	RVWD	APVD	DATE
0	ISSUED FOR CONSTRUCTION					11/6/08

REVISION HISTORY

RIVER PROTECTION PROJECT
WASTE TREATMENT PLANT
2435 STEVENS CENTER PLACE
RICHLAND, WA 99354

CONTRACT No DE-AC27-01RV14136

P&ID - PTF
ULTRAFILTRATION PROCESS SYSTEM
UTILITY SERVICES
UFP-RK-00076

SCALE: NONE

24590-PTF-M6-UFP-00020004

REV 0

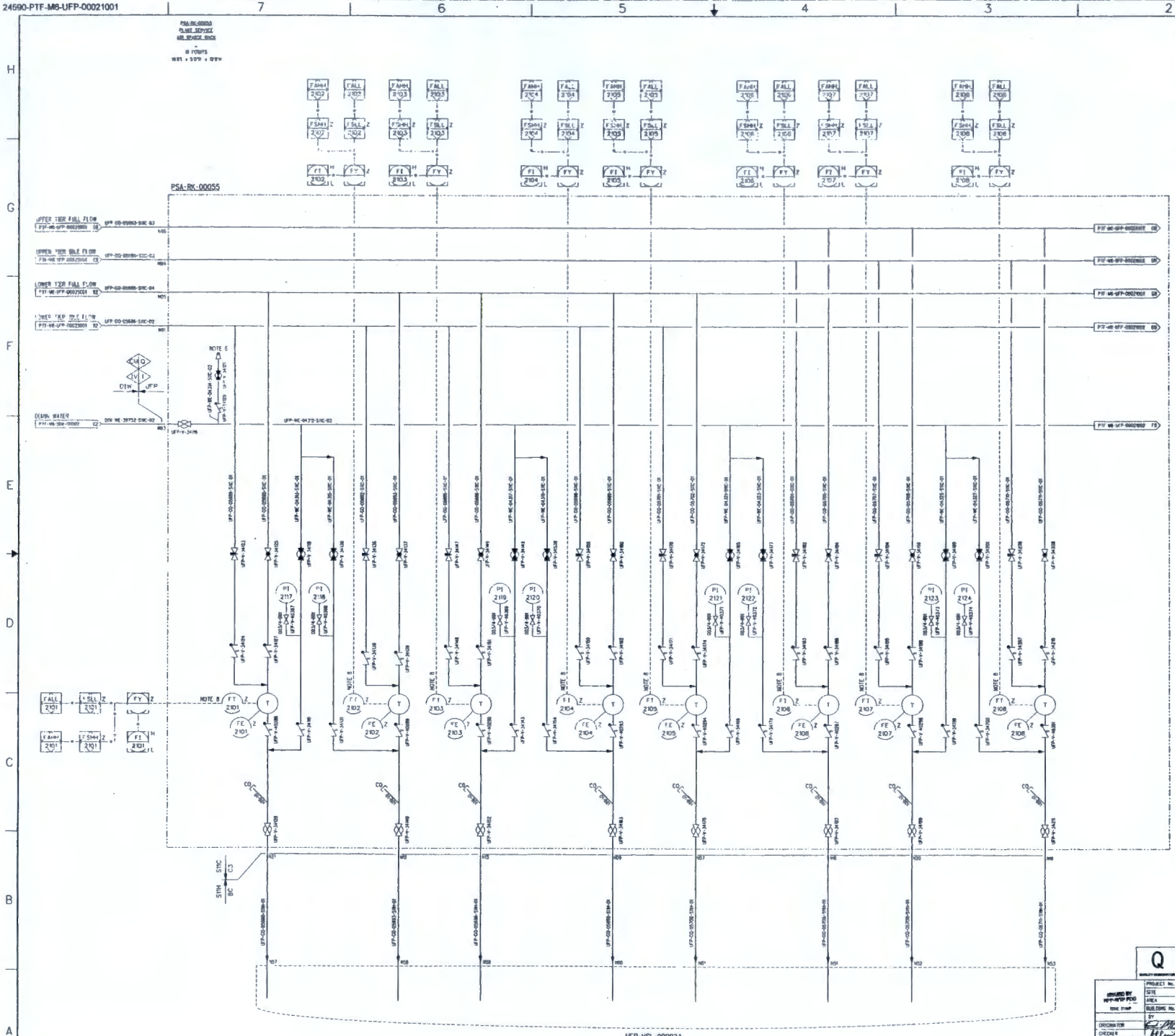

NOTES:

1. SEE DRAWINGS 24590-WTP-M8-S0-00001 THROUGH 24590-WTP-M8-S0-00008 FOR GENERAL NOTES, SYMBOLS AND LEGEND, AND GENERAL SLOPE REQUIREMENTS.
2. CONTENTS OF THIS DOCUMENT ARE DANGEROUS WASTE PERMIT AFFECTING.
3. THE PRESSURE BOUNDARY FOR ALL COMPONENTS ON THIS DRAWING IS QUALITY LEVEL 0 AND SEISMIC CATEGORY SC-1, UNLESS OTHERWISE NOTED.
4. ALL LINES SHOWN ON THIS DRAWING SHALL BE FREE DRAINING, EXCEPT BLACK CELL WHICH ARE SELF-DRAINING UNLESS OTHERWISE NOTED.
5. FOR PROCESS INFORMATION, REFER TO DRAWING 24590-PTF-M6-UFP-00002001.
6. CONNECTION PROVIDED FOR REAGENTS, PLANT WASH AND SERVICE AIR.
7. BELL MOUTH NOZZLE TO BE INCLUDED ON THE DISCHARGE OF ALL SPARGE TUBES.
8. FLOW TRANSMITTER PROVIDED WITH INTEGRAL INDICATOR.
9. THIS DRAWING IS CONVERTED FROM A SINGLE SHEET TO MULTI-SHEET DRAWINGS AND, IN PART, SUPERSEDES 24590-PTF-M6-UFP-00021 REV 1. THIS IS A MAJOR REVISION, NO REVISION CLOUDS ARE SHOWN. THIS DRAWING MAY INCLUDE INFORMATION FROM 24590-PTF-MEN-MRDT-00027, -00037, -00038, AND 24580-PTF-M6H-UFP-00034.

HOLD/OPEN ITEMS:

NONE

REFERENCES:

1. THE REQUIRED OPERATIONAL SEQUENCES, PERMISSIVES, INTERLOCKS, ALARMS, AND OPERATOR INTERFACE POINTS ARE FULLY DESCRIBED IN THE UFP SYSTEM LOGIC DIAGRAMS (FUTURE) AND THE UFP SYSTEM DESCRIPTION (FUTURE REVISION).

DRAWING INDEX

DWG NO	TITLE
24590-PTF-M6-UFP-00021001	ULTRAFILTRATION PROCESS SYSTEM PSA-RK-00055
24590-PTF-M6-UFP-00021002	ULTRAFILTRATION PROCESS SYSTEM PSA-RK-00055

REVISION HISTORY

REV	DESCRIPTION	ORG	CHKD	REVWD	APVD	DATE
0	ISSUED FOR CONSTRUCTION SEE NOTE 9					11/6/08

Q

PROJECT No. 24590
SITE HANFORD
AREA 200E
BUILDING No. 10

RIVER PROTECTION PROJECT
WASTE TREATMENT PLANT
2435 STEVENS CENTER PLACE
RICHLAND, WA 99354

CONTRACT No DE-AC27-01RV14136

P&ID - PTF ULTRAFITRATION PROCESS SYSTEM SPARGER RACK PSA-RK-00055

SCALE NONE

24590-PTF-M6-UFP-00021001

REV 0

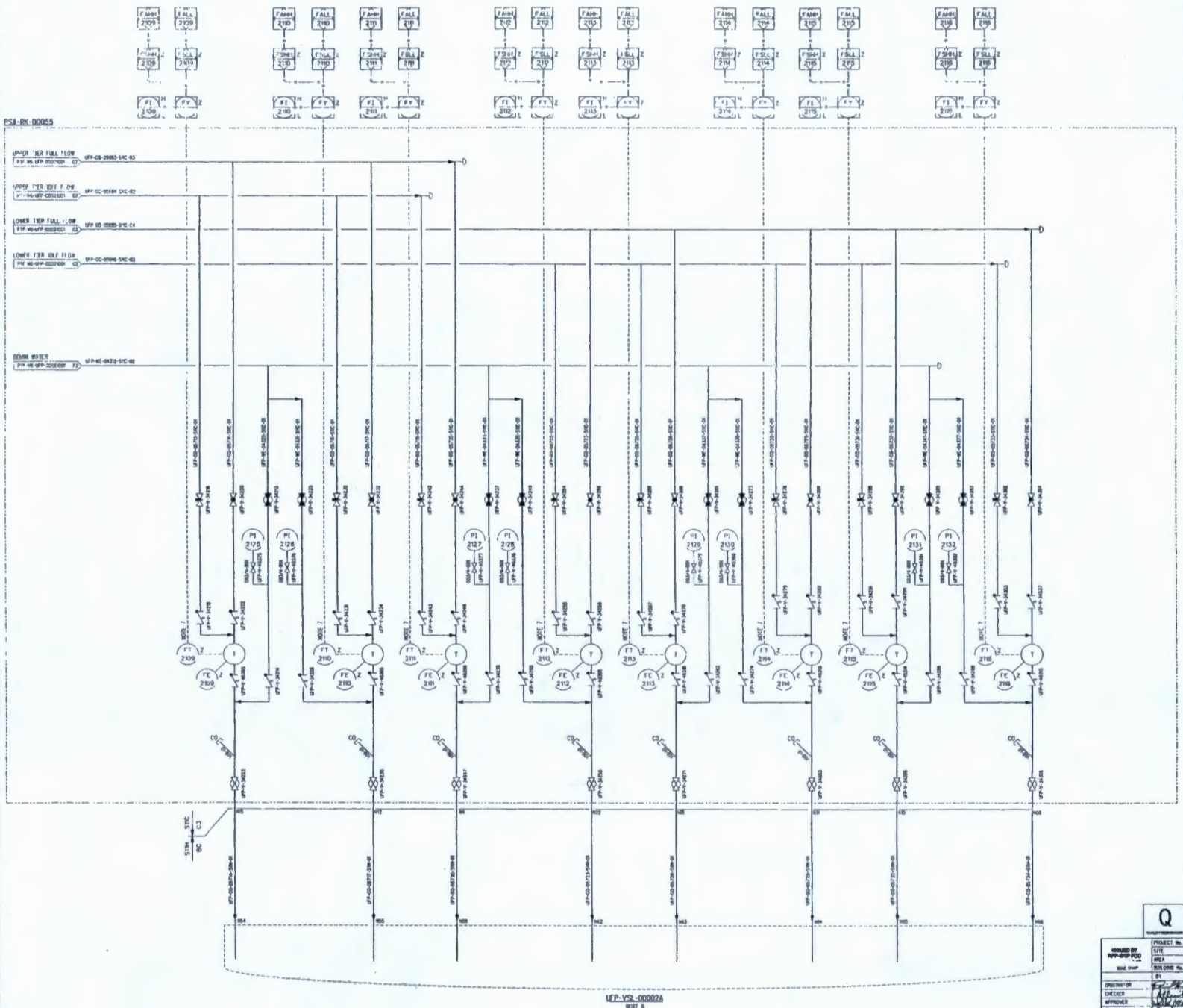

NOTES:

1. SEE DRAWINGS 24590-WTP-M6-S0-00001 THROUGH 24590-WTP-M6-S0-00008 FOR GENERAL NOTES, SYMBOLS AND LEGEND, AND GENERAL SCOPE REQUIREMENTS.
2. CONTENTS OF THIS DOCUMENT ARE DANGEROUS WASTE PERMIT AFFECTING.
3. THE PRESSURE BOUNDARY FOR ALL COMPONENTS ON THIS DRAWING IS QUALITY LEVEL Q AND SEISMIC CATEGORY SC-I, UNLESS OTHERWISE NOTED.
4. ALL LINES SHOWN ON THIS DRAWING SHALL BE FREE DRAINING, EXCEPT BLACK CELL LINES WHICH ARE SELF-DRAINING, UNLESS OTHERWISE NOTED.
5. FOR PROCESS INFORMATION, REFER TO DRAWING 24590-PTF-M6-UFP-00002001.
6. BELL MOUTH NOZZLE TO BE INCLUDED ON THE DISCHARGE OF ALL SPARGE TUBES.
7. FLOW TRANSMITTER PROVIDED WITH INTEGRAL INDICATOR.
8. THIS DRAWING IS CONVERTED FROM A SINGLE SHEET TO MULTI-SHEET DRAWINGS AND IN PART SUPERSEDES 24590-WTP-M6-UFP-00021 REV 1. THIS IS A MAJOR REVISION, NO REVISION CLOUDS ARE SHOWN. THIS DRAWING MAY INCLUDE INFORMATION FROM 24590-PTF-M6M-M80T-00027, 00037, -00038, AND 24590-PTF-M6N-UFP-00034.

HOLD/OPEN ITEMS:

NONE

REFERENCES:

1. THE REQUIRED OPERATIONAL SEQUENCES, PERMISSIVES, INTERLOCKS, ALARMS, AND OPERATOR INTERFACE POINTS ARE FULLY DESCRIBED IN THE UFP SYSTEM LOGIC DIAGRAMS (FUTURE) AND THE UFP SYSTEM DESCRIPTION (FUTURE REVISION).

REV	DESCRIPTION	ORG	CHKD	REVWD	APVD	DATE
0	ISSUED FOR CONSTRUCTION SEE NOTE 8					6/6/07

REVISION HISTORY

Q

RIVER PROTECTION PROJECT
WASTE TREATMENT PLANT
2435 STEVENS CENTER PLACE
RICHLAND, WA 99354

CONTRACT No: DE-AC27-01RV14136

P&ID - PTF
ULTRAFITRATION PROCESS SYSTEM
SPARGER RACK
PSA-RK-00055

SCALE: NONE

24590-PTF-M6-UFP-00021002 REV 0

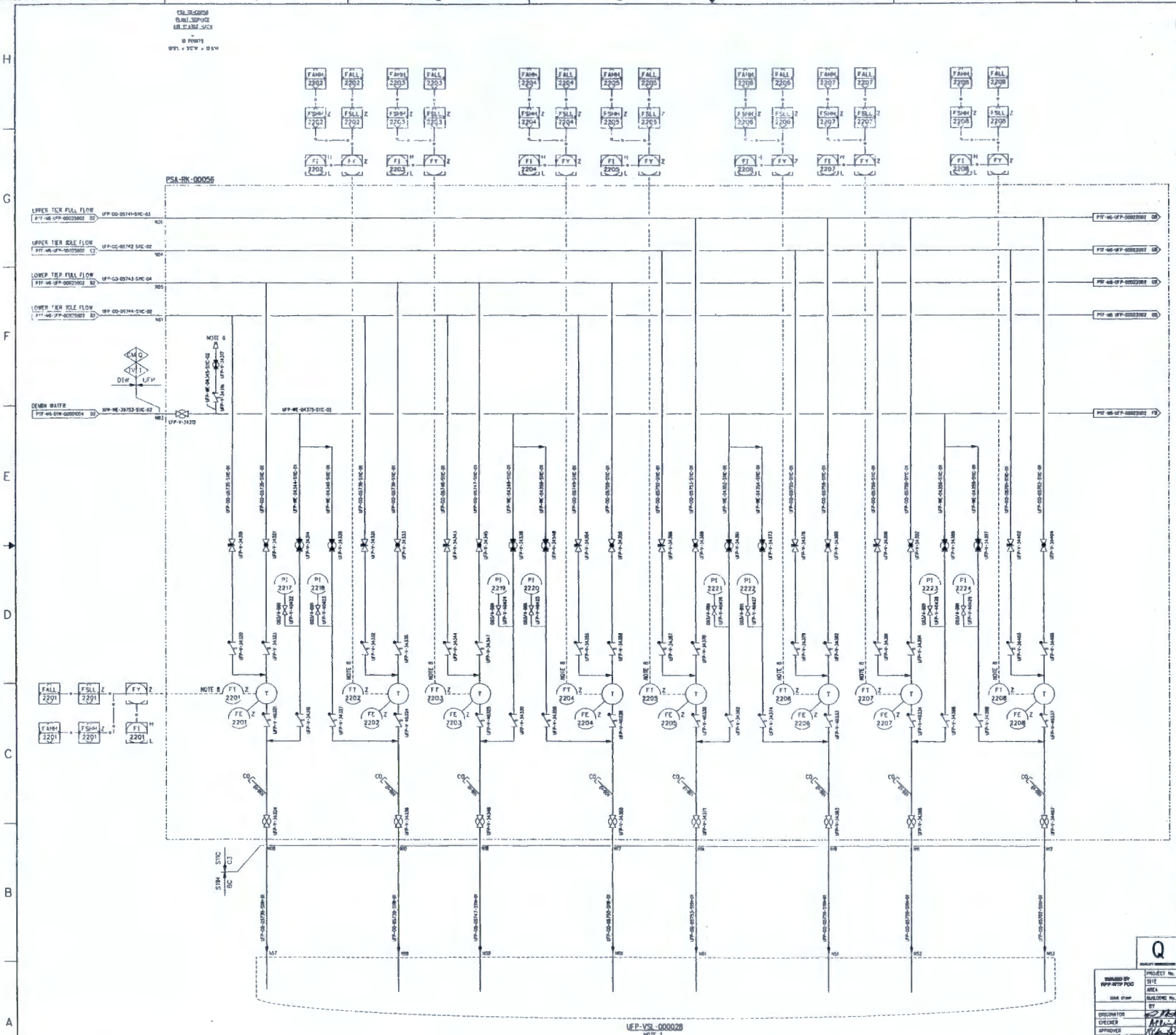

NOTES:

1. SEE DRAWINGS 24590-WTP-M6-S0-00001 THROUGH 24590-WTP-M6-S0-00008 FOR GENERAL NOTES, SYMBOLS AND LEGEND, AND GENERAL SLOPE REQUIREMENTS.
2. CONTENTS OF THIS DOCUMENT ARE DANGEROUS WASTE PERMIT AFFECTING.
3. THE PRESSURE BOUNDARY FOR ALL COMPONENTS ON THIS DRAWING IS QUALITY LEVEL C AND SEISMIC CATEGORY SC-I, UNLESS OTHERWISE NOTED.
4. ALL LINES SHOWN ON THIS DRAWING SHALL BE FREE DRAINING, EXCEPT BLACK CELL LINES WHICH ARE SELF-DRAINING, UNLESS OTHERWISE NOTED.
5. FOR PROCESS INFORMATION, REFER TO DRAWING 24590-PTF-M6-UFP-00003001.
6. CONNECTION PROVIDED FOR REAGENTS, PLANT WASH AND SERVICE AIR.
7. BELL MOUTH NOZZLE TO BE INCLUDED ON THE DISCHARGE OF ALL SPARGE TUBES.
8. FLOW TRANSMITTER PROVIDED WITH INTEGRAL INDICATOR.
9. THIS DRAWING IS CONVERTED FROM A SINGLE SHEET TO MULTI-SHEET DRAWINGS AND, IN PART, SUPERSEDES 24590-PTF-M6-UFP-00022 REV 1. THIS IS A MAJOR REVISION. NO REVISION CLOUDS ARE SHOWN. THIS DRAWING MAY INCLUDE INFORMATION FROM 24590-PTF-MBN-M8OT-00027, -00037, -00038, AND 24590-PTF-MBN-UFP-00035.

HOLD/OPEN ITEMS:

NONE

REFERENCES:

1. THE REQUIRED OPERATIONAL SEQUENCES, PERMISSIVES, INTERLOCKS, ALARMS, AND OPERATOR INTERFACE POINTS ARE FULLY DESCRIBED IN THE UFP SYSTEM LOGIC DIAGRAMS (FUT.RC) AND THE UFP SYSTEM DESCRIPTION (FUTURE REVISION).

DRAWING INDEX

DWG NO	TITLE
24590-PTF-M6-UFP-00022001	ULTRAFILTRATION PROCESS SYSTEM PSA-RK-00056
24590-PTF-M6-UFP-00022002	ULTRAFILTRATION PROCESS SYSTEM PSA-RK-00056

REVISION HISTORY

REV	DESCRIPTION	ORIG	CHKD	RVWD	APVD	DATE
0	ISSUED FOR CONSTRUCTION SEE NOTE 9					11/07/08

Q

RIVER PROTECTION PROJECT
WASTE TREATMENT PLANT
2435 STEVENS CENTER PLACE
RICHLAND, WA 99354

CONTRACT No DE-AC27-01RV14136

P&ID - PTF
ULTRAFITRATION PROCESS SYSTEM
SPARGER RACK
PSA-RK-00056

SCALE: NONE

24590-PTF-M6-UFP-00022001

REV 0

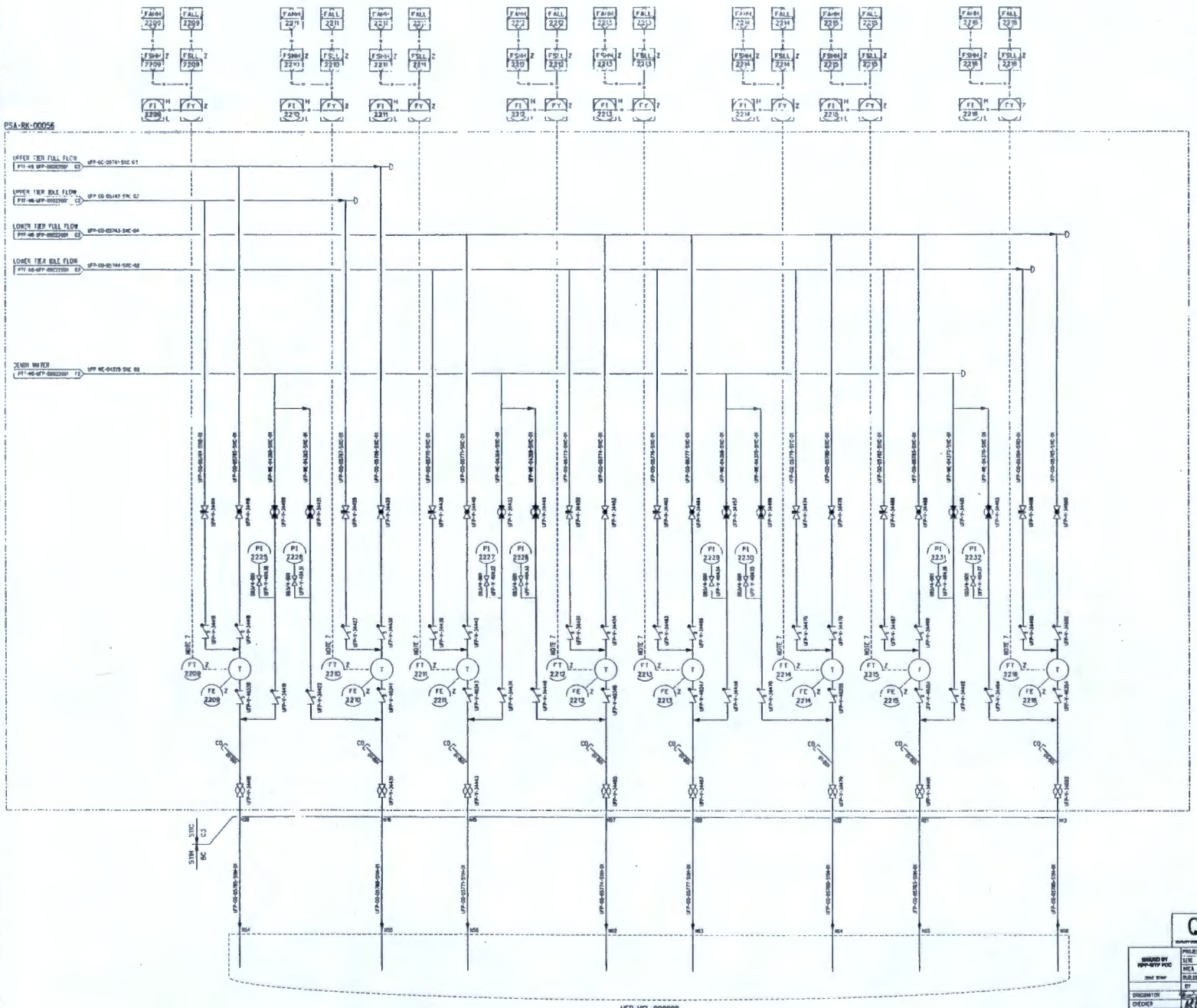

NOTES:

1. SEE DRAWINGS 24590-WTP-M6-50-00001 THROUGH 24590-WTP-M6-50-00008 FOR GENERAL NOTES, SYMBOLS AND LEGEND, AND GENERAL SLOPE REQUIREMENTS.
2. CONTENTS OF THIS DOCUMENT ARE DANGEROUS WASTE PERMIT AFFECTING.
3. THE PRESSURE BOUNDARY FOR ALL COMPONENTS ON THIS DRAWING IS QUALITY LEVEL Q AND SEISMIC CATEGORY SC I, UNLESS OTHERWISE NOTED.
4. ALL LINES SHOWN ON THIS DRAWING SHALL BE FREE DRAINING, EXCEPT BLACK CELL LINES WHICH ARE SELF-DRAINING, UNLESS OTHERWISE NOTED.
5. FOR PROCESS INFORMATION, REFER TO DRAWING 24590-PTF-M6-UFP-00003001.
6. BELL MOUTH NOZZLE TO BE INCLUDED ON THE DISCHARGE OF ALL SPARGE TUBES.
7. FLOW TRANSMITTER PROVIDED WITH INTEGRAL INDICATOR
8. THIS DRAWING IS CONVERTED FROM A SINGLE SHEET TO MULTI SHEET DRAWINGS AND IN PART, SUPERSEDES 24590-PTF-M6-UFP-00022. REV 1. THIS IS A MAJOR REVISION. NO REVISION CLOUDS ARE SHOWN. THIS DRAWING MAY INCLUDE INFORMATION FROM 24590-PTF-M6N-M6GT-00027, -00037, -00038, AND 24590-PTF-M6N-UFP-00035.

HOLD/OPEN ITEMS:

NONE

REFERENCES:

1. THE REQUIRED OPERATIONAL SEQUENCES, PERMISSIVES, INTERLOCKS, ALARMS, AND OPERATOR INTERFACE POINTS ARE FULLY DESCRIBED IN THE UFP SYSTEM LOGIC DIAGRAMS (FUTURE) AND THE UFP SYSTEM DESCRIPTION (FUTURE REVISION).

REV	DESCRIPTION	ORG	CHKD	REVIEWED	APVD	DATE
0	ISSUED FOR CONSTRUCTION SEE NOTE 8					11/7/08

REVISION HISTORY

ISSUED BY RPP-WTP PDC

	BY	DATE
ORIGINATOR		
CHECKER		
APPROVER		
REVIEWER		

CONTENT APPLICABLE TO ALARA [ ] YES [ ] NO

SAFETY SCREEN REQUIRED? [ ] YES [ ] NO

RIVER PROTECTION PROJECT
WASTE TREATMENT PLANT
2435 STEVENS CENTER PLACE
RICHLAND, WA 99354

CONTRACT No. DE-AC27-01RV14136

P&ID - PTF ULTRAFITRATION PROCESS SYSTEM SPARGER RACK PSA-RK-00056

SCALE: NONE

24590-PTF-M6-UFP-00022002

REV 0

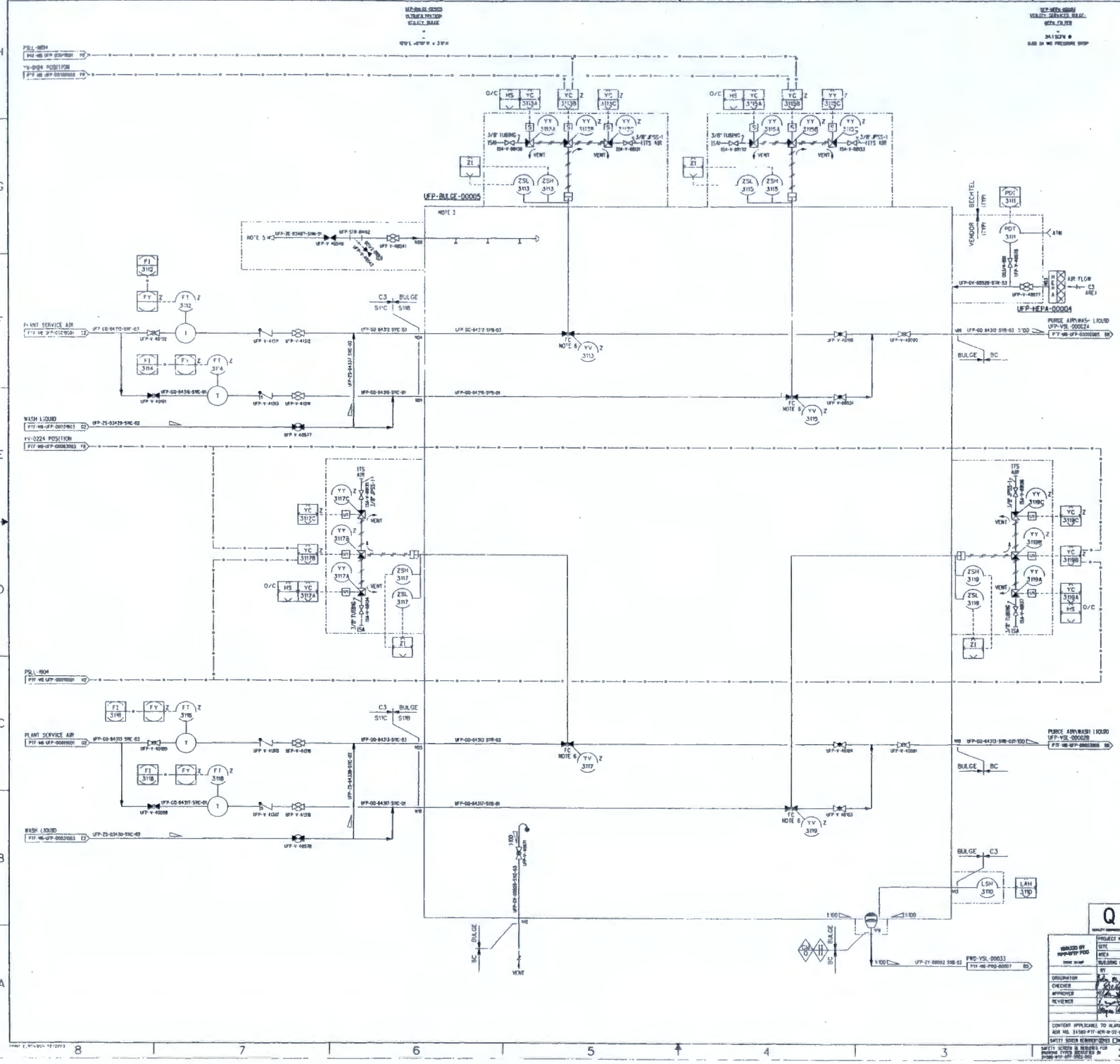

NOTES:

1. SEE DRAWING 24590-WTP-M6-50-00001 THROUGH 24590-WTP-M6-50-00008 FOR GENERAL NOTES, SYMBOLS AND LEGEND, AND GENERAL SLOPE REQUIREMENTS.
2. CONTENTS OF THIS DOCUMENT ARE DANGEROUS WASTE PERMIT AFFECTING.
3. THE PRESSURE BOUNDARY FOR ALL COMPONENTS ON THIS DRAWING IS QUALITY LEVEL Q AND SEISMIC CATEGORY SC-I. BULGE ENCLOSURE, INCLUDING DRAIN, VENTILATION AND WASH LINES IS QUALITY LEVEL CM AND SEISMIC CATEGORY SC-II, UNLESS OTHERWISE NOTED.
4. ALL LINES SHOWN ON THIS DRAWING SHALL BE FREE DRAINING, EXCEPT BLACK CELL LINES WHICH ARE SELF-DRAINING, UNLESS OTHERWISE NOTED.
5. CONNECTION PROVIDED FOR REAGENTS, PLANT WASH, AND SERVICE AIR.
6. ON/OFF VALVES FOR PLANT SERVICE AIR AND PROCESS CONDENSATE HEADERS ARE INTERLOCKED FOR PROPER PROCESS SEQUENCING.
7. PLANT SERVICE AIR HEADER PRESSURE LOW IS INTERLOCKED TO CLOSE ITS AIR PURGE VALVES.

HOLD/OPEN ITEMS:

NONE

REFERENCES:

1. THE REQUIRED OPERATIONAL SEQUENCES, PERMISSIVES, INTERLOCKS, ALARMS, AND OPERATOR INTERFACE POINTS ARE FULLY DESCRIBED IN THE UFP SYSTEM LOGIC DIAGRAMS (FUTURE), AND THE UFP SYSTEM DESCRIPTION (FUTURE REVISION).

DRAWING INDEX

DWG NO	TITLE
24590-PTF-M6-UFP-00031001	ULTRAFILTRATION PROCESS SYSTEM UFP-BULGE-00005
24590-PTF-M6-UFP-00031002	ULTRAFILTRATION PROCESS SYSTEM UFP-BULGE-00005
24590-PTF-M6-UFP-00031003	ULTRAFILTRATION PROCESS SYSTEM UFP-BULGE-00005

Q

REV	DESCRIPTION	DRG	CHKD	RVWD	APVD	DATE
0	ISSUED FOR CONSTRUCTION					

REVISION HISTORY

	BY	DATE
ORIGINATOR		
CHECKER		
APPROVER		
REVIEWER		

CONTENT APPLICABLE TO ALARM? YES NO
ADR NO. 24590-PTF-ADR-M-03-046 REV. 0
SAFETY SCREEN REQUIRED? YES NO

RIVER PROTECTION PROJECT
WASTE TREATMENT PLANT
2435 STEVENS CENTER PLACE
RICHLAND, WA 99354

CONTRACT No. DE-AC27-01RV14136

P&ID - PTF
ULTRAFILTRATION PROCESS SYSTEM
UTILITY SERVICES
UFP-BULGE-00005

SCALE: NONE
SIZE: 44x34
24590-PTF-M6-UFP-00031001
REV 0

This document contains proprietary information belonging to the Bechtel National, Inc. and the Contractor. Neither this document nor the information contained herein may be used, duplicated or disclosed without the prior written consent of BNI or the Contractor.

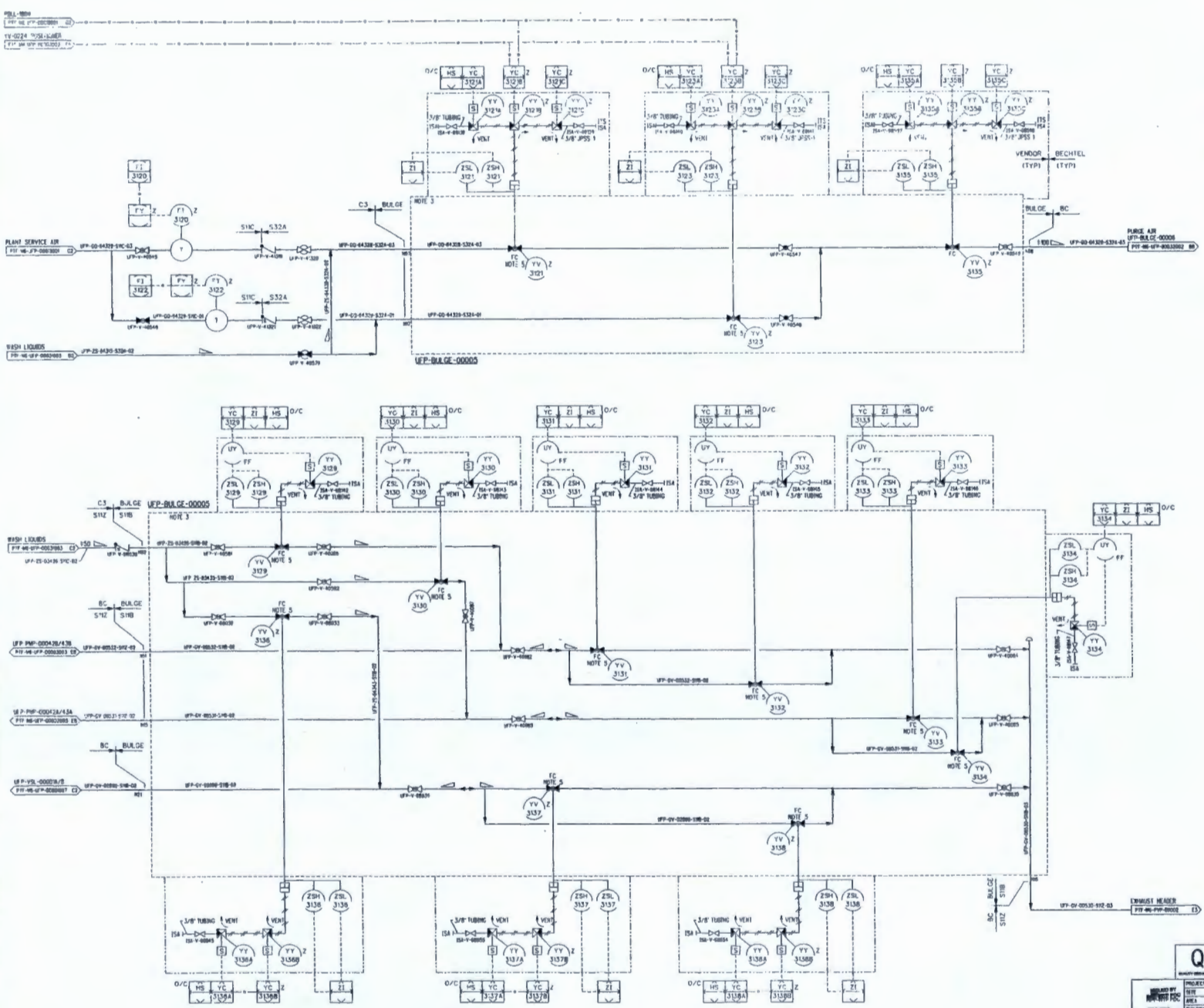

NOTES:

1. SEE DRAWING 24590-WTP-M6-S0-00001 THROUGH 24590-WTP-M6-S0-00008 FOR GENERAL NOTES, SYMBOLS AND LEGEND, AND GENERAL SLOPE REQUIREMENTS.
2. CONTENTS OF THIS DOCUMENT ARE DANGEROUS WASTE PERMIT AFFECTING.
3. THE PRESSURE BOUNDARY FOR ALL COMPONENTS ON THIS DRAWING IS QUALITY LEVEL Q AND SEISMIC CATEGORY SC-I. BULGE ENCLOSURE, IS QUALITY LEVEL CM AND SEISMIC CATEGORY SC II, UNLESS OTHERWISE NOTED.
4. ALL LINES SHOWN ON THIS DRAWING SHALL BE FREE DRAINING, EXCEPT BLACK CELL LINES WHICH ARE SELF-DRAINING, UNLESS OTHERWISE NOTED.
5. ON/OFF VALVES FOR PLANT SERVICE AIR, AND PROCESS CONDENSATE HEADERS ARE INTERLOCKED FOR PROPER PROCESS SEQUENCING.

HOLD/OPEN ITEMS:

NONE

REFERENCES:

1. THE REQUIRED OPERATIONAL SEQUENCES, PERMISSIVES, INTERLOCKS, ALARMS AND OPERATOR INTERFACE POINTS ARE FULLY DESCRIBED IN THE UFP SYSTEM LOGIC DIAGRAMS (FUTURE), AND THE UFP SYSTEM DESCRIPTION (FUTURE REVISION).

REV	DESCRIPTION	DRG	CHKD	REVWD	APVD	DATE
0	ISSUED FOR CONSTRUCTION					11/14/08

REVISION HISTORY

RIVER PROTECTION PROJECT
WASTE TREATMENT PLANT
2435 STEVENS CENTER PLACE
RICHLAND, WA 99354

CONTRACT NO DE-AC27-01RV14136

P&ID - PTF
ULTRAFILTRATION PROCESS SYSTEM
UTILITY SERVICES
UFP-BULGE-00005

SCALE: NONE

24590-PTF-M6-UFP-00031002

REV 0

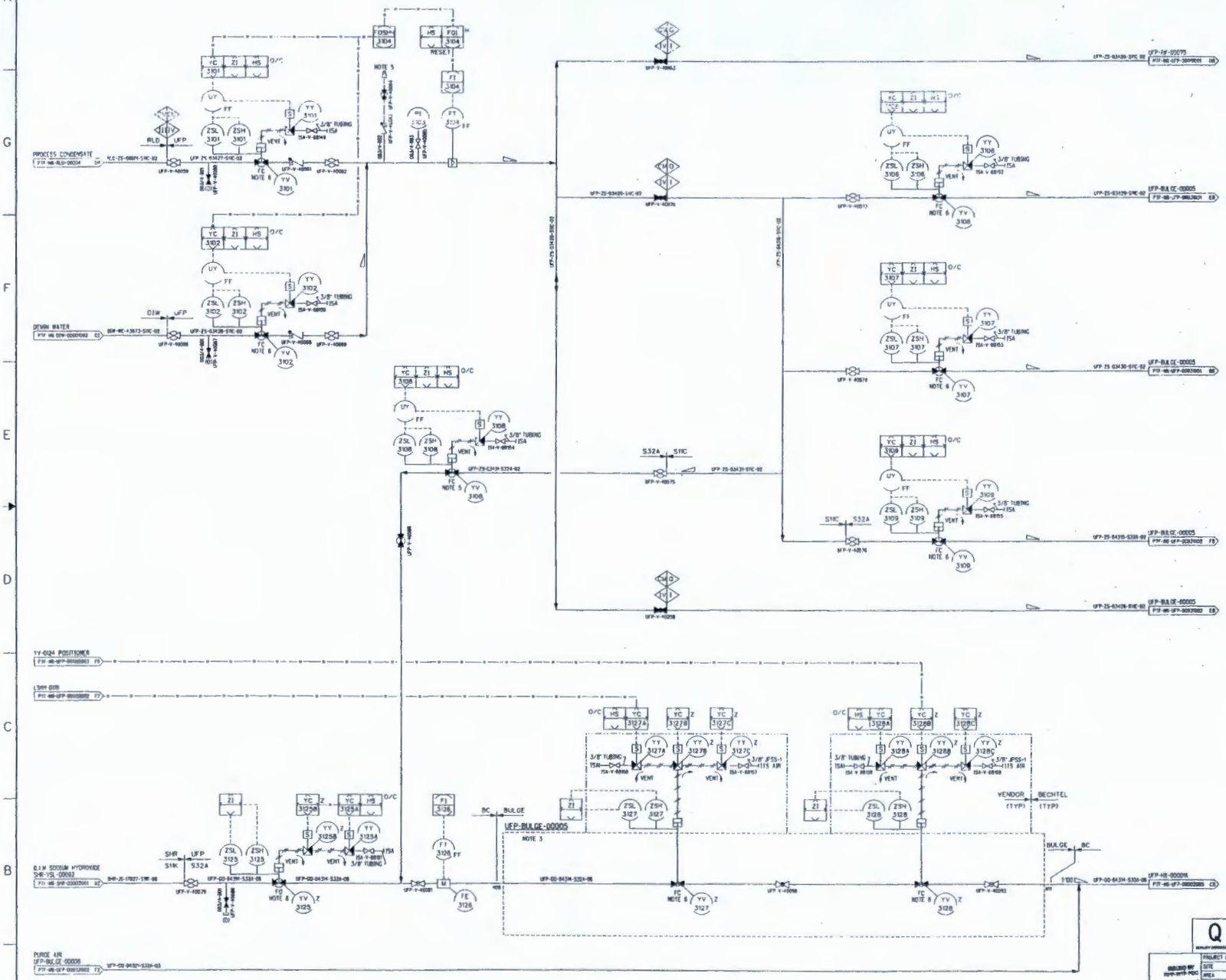

NOTES:

1. SEE DRAWING 24590-WTP-M6-50-00001 THROUGH 24590-WTP-M6-50-00008 FOR GENERAL NOTES, SYMBOLS AND LEGEND, AND GENERAL SLOPE REQUIREMENTS.
2. CONTENTS OF THIS DOCUMENT ARE DANGEROUS WASTE PERMIT AFFECTING.
3. THE PRESSURE BOUNDARY FOR ALL COMPONENTS ON THIS DRAWING IS QUALITY LEVEL Q AND SEISMIC CATEGORY SC-I. BULGE ENCLOSURE IS QUALITY LEVEL QM AND SEISMIC CATEGORY SC-II, UNLESS OTHERWISE NOTED.
4. ALL LINES SHOWN ON THIS DRAWING SHALL BE FREE DRAINING, EXCEPT BLACK CELL LINES WHICH ARE SELF-DRAINING, UNLESS OTHERWISE NOTED.
5. CONNECTION PROVIDED FOR REAGENTS, PLANT WASH, AND SERVICE AIR.
6. ON/OFF VALVES FOR PLANT SERVICE AIR, SODIUM HYDROXIDE, AND PROCESS CONDENSATE HEADERS ARE INTERLOCKED FOR PROPER PROCESS SEQUENCING.

HOLD/OPEN ITEMS:

NONE

REFERENCES:

1. THE REQUIRED OPERATIONAL SEQUENCES, PERMISSIVES, INTERLOCKS, ALARMS, AND OPERATOR INTERFACE POINTS ARE FULLY DESCRIBED IN THE UFP SYSTEM LOGIC DIAGRAMS (FUTURE), AND THE UFP SYSTEM DESCRIPTION (FUTURE REVISION).

REV	DESCRIPTION	DWN	CHKD	REVD	APVD	DATE
0	ISSUED FOR CONSTRUCTION					11/10/08

REVISION HISTORY

RIVER PROTECTION PROJECT
WASTE TREATMENT PLANT
2435 STEVENS CENTER PLACE
RICHLAND, WA 99354

CONTRACT No. DE-AC27-01RV14136

P&D - PTF
ULTRAFILTRATION PROCESS SYSTEM
UTILITY SERVICES
UFP-BULGE-00005

SCALE: NONE

24590-PTF-M6-UFP-00031003 REV 0

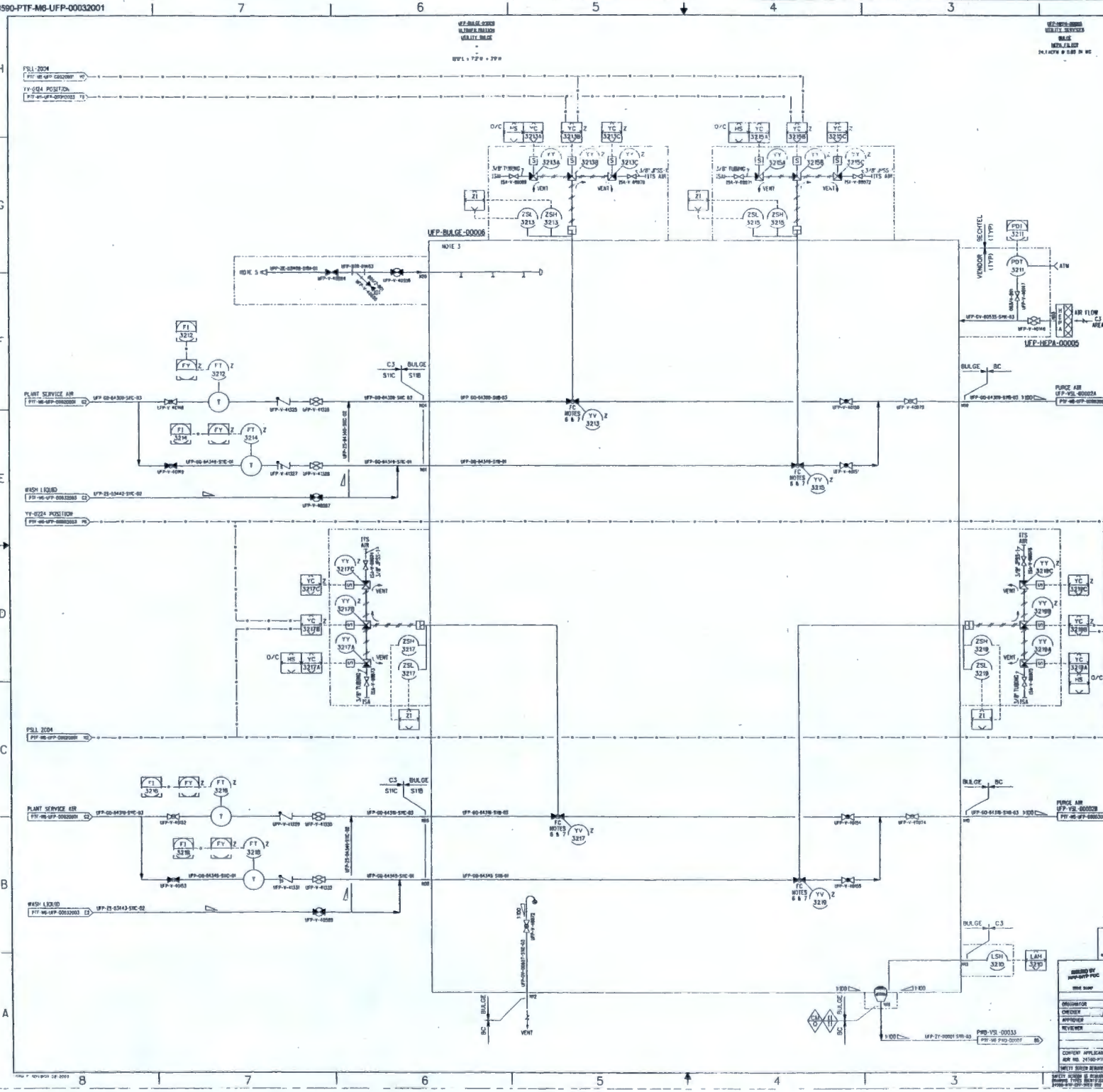

NOTES:

1. SEE DRAWING 24590-WTP-M6-50-00001 THROUGH 24590-WTP-M6-50-00008 FOR GENERAL NOTES, SYMBOLS AND LEGEND, AND GENERAL SLOPE REQUIREMENTS.
2. CONTENTS OF THIS DOCUMENT ARE DANGEROUS WASTE PERMIT AFFECTING.
3. THE PRESSURE BOUNDARY FOR ALL COMPONENTS ON THIS DRAWING IS QUALITY LEVEL D, AND SEISMIC CATEGORY SC-I. BULGE ENCLOSURE, INCLUDING DRAIN, VENTILATION LINES, AND WASH LINES IS QUALITY LEVEL CM AND SEISMIC CATEGORY SC-II, UNLESS OTHERWISE NOTED.
4. ALL LINES SHOWN ON THIS DRAWING SHALL BE FREE DRAINING, EXCEPT BLACK CELL LINES WHICH ARE SELF-DRAINING, UNLESS OTHERWISE NOTED.
5. CONNECTION PROVIDED FOR REAGENTS, PLANT WASH, AND SERVICE AIR.
6. ON/OFF VALVES FOR PLANT SERVICE AIR, AND PROCESS CONDENSATE HEADERS ARE INTERLOCKED FOR PROPER PROCESS SEQUENCING.
7. PLANT SERVICE AIR HEADER PRESSURE LOW IS INTERLOCKED TO CLOSE IMPORTANT TO SAFETY (ITS) AIR PURGE VALVES.

HOLD/OPEN ITEMS:

NONE

REFERENCES:

1. THE REQUIRED OPERATIONAL SEQUENCES, PERMISSIVES, INTERLOCKS, ALARMS AND OPERATOR INTERFACE POINTS ARE FULLY DESCRIBED IN THE UFP SYSTEM LOGIC DIAGRAMS (FUTURE), AND THE UFP SYSTEM DESCRIPTION (FUTURE REVISION).

DRAWING INDEX	
DWG NO	TITLE
24590-PTF-M6-UFP-00032001	ULTRAFILTRATION PROCESS SYSTEM UFP-BULGE-00006
24590-PTF-M6-UFP-00032002	ULTRAFILTRATION PROCESS SYSTEM UFP-BULGE-00006
24590-PTF-M6-UFP-00032003	ULTRAFILTRATION PROCESS SYSTEM UFP-BULGE-00006

REV	DESCRIPTION	DRG	CHKD	RVWD	APVD	DATE
0	ISSUED FOR CONSTRUCTION					

REVISION HISTORY

Q

RIVER PROTECTION PROJECT
WASTE TREATMENT PLANT
2435 STEVENS CENTER PLACE
RICHLAND, WA 99354

CONTRACT No: DE-AC27-01RV14136

P&ID - PTF
ULTRAFILTRATION PROCESS SYSTEM
UTILITY SERVICES
UFP-BULGE-00006

SCALE: NONE

24590-PTF-M6-UFP-00032001 REV 0

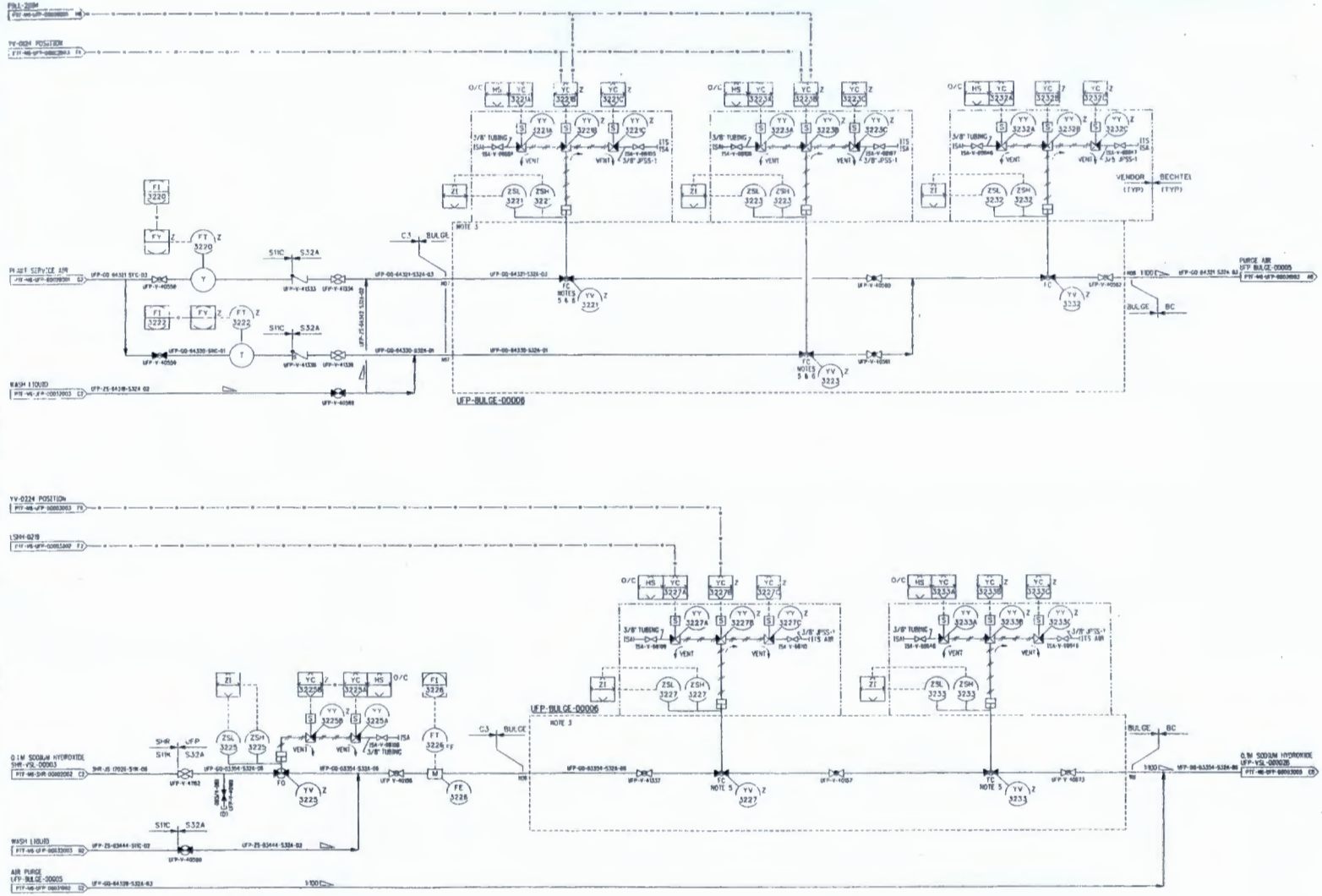

NOTES:

1. SEE DRAWING 24590-WTP-M6-S0-00001 THROUGH 24590-WTP-M6-S0-00008 FOR GENERAL NOTES, SYMBOLS AND LEGEND, AND GENERAL SLOPE REQUIREMENTS.
2. CONTENTS OF THIS DOCUMENT ARE DANGEROUS WASTE PERMIT AFFECTING.
3. THE PRESSURE BOUNDARY FOR ALL COMPONENTS ON THIS DRAWING IS QUALITY LEVEL: D AND SEISMIC CATEGORY SC-I. BULGE ENCLOSURE IS QUALITY LEVEL CM AND SEISMIC CATEGORY SC II, UNLESS OTHERWISE NOTED.
4. ALL LINES SHOWN ON THIS DRAWING SHALL BE FREE DRAINING, EXCEPT BLACK CELL LINES WHICH ARE SELF-DRAINING, UNLESS OTHERWISE NOTED.
5. ON/OFF VALVES FOR PLANT SERVICE AIR, SODIUM HYDROXIDE, AND PROCESS CONDENSATE HEADERS ARE INTERLOCKED FOR PROPER PROCESS SEQUENCING.
6. PLANT SERVICE AIR HEADER PRESSURE LOW IS INTERLOCKED TO CLOSE IMPORTANT TO SAFETY (ITS) AIR PURGE VALVES.

HOLD/OPEN ITEMS:

NONE

REFERENCES:

1. THE REQUIRED OPERATIONAL SEQUENCES, PERMISSIVES, INTERLOCKS, ALARMS AND OPERATOR INTERFACE POINTS ARE FULLY DESCRIBED IN THE UFP SYSTEM LOGIC DIAGRAMS (FUTURE), AND THE UFP SYSTEM DESCRIPTION (FUTURE REVISION).

Q

REV	DESCRIPTION	ORG	CHKD	REVWD	APVD	DATE
0	ISSUED FOR CONSTRUCTION					

REVISION HISTORY

ISSUED BY WTP-WTP PDC

PROJECT No.	24590	
SITE	HANFORD	
AREA	200E	
BUILDING No.	0	

	BY	DATE
ORIGINATOR	John M. Beaver	12/3/03
CHECKER	[illegible]	12/3/03
APPROVER	[illegible]	12/04/03
REVIEWER	[illegible]	12/04/03
	[illegible]	12/4/03

CONTENT APPLICABLE TO ALARA? YES NO
ADR NO. 24590-PTF-ADR-M-02-046 REV. 4
SAFETY SCREEN NUMBER(S) [illegible]

RIVER PROTECTION PROJECT
WASTE TREATMENT PLANT
2435 STEVENS CENTER PLACE
RICHLAND, WA 99354

CONTRACT No. DE-AC27-01RV14136

P&ID - PTF
ULTRAFILTRATION PROCESS SYSTEM
UTILITY SERVICES
UFP-BULGE-00006

SCALE: NONE

24590-PTF-M6-UFP-00032002

REV 0

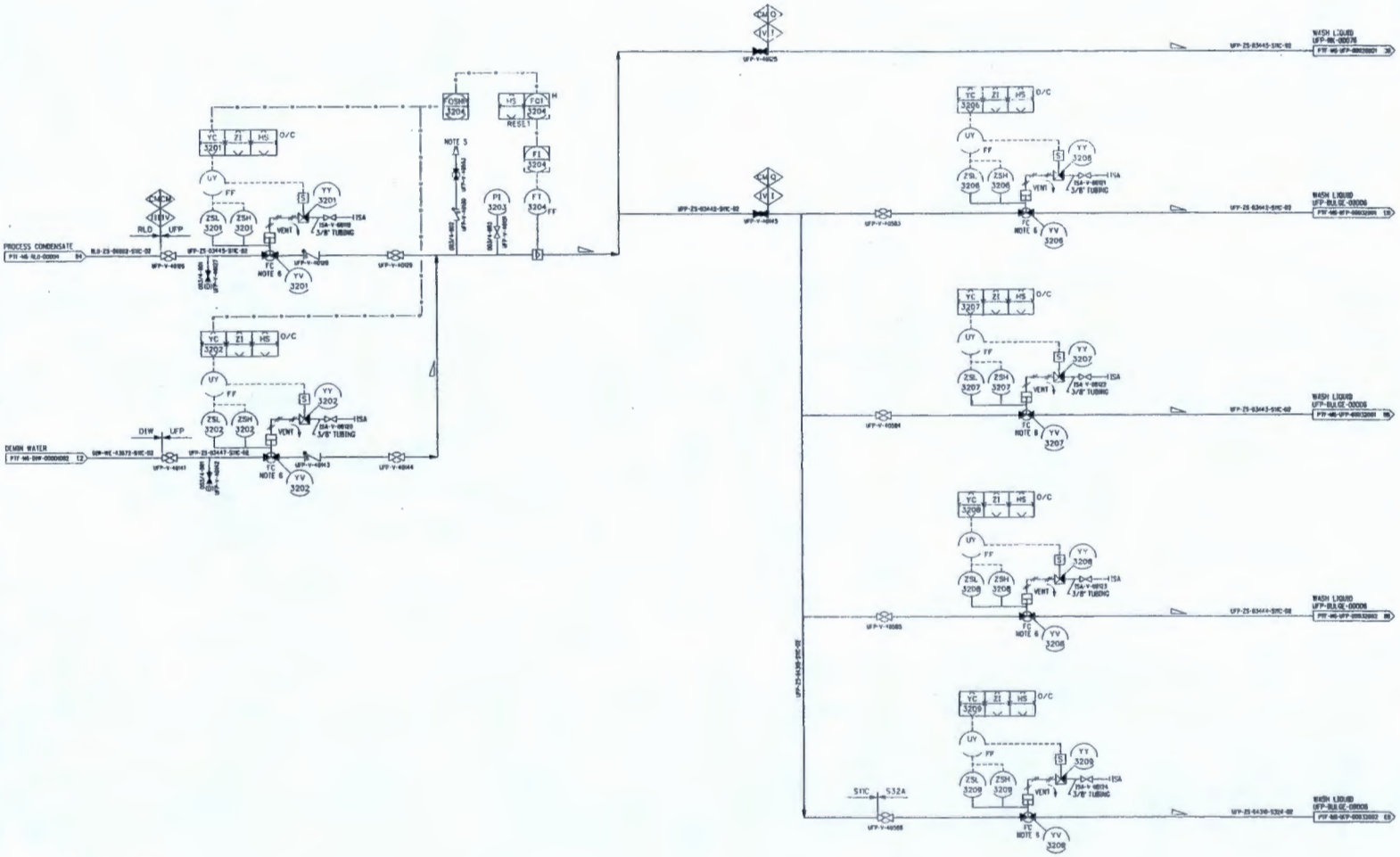

NOTES:

1. SEE DRAWING 24590-WTP-M6-S0-00001 THROUGH 24590-WTP-M6-S0-00008 FOR GENERAL NOTES, SYMBOLS AND LEGEND, AND GENERAL SLOPE REQUIREMENTS.
2. CONTENTS OF THIS DOCUMENT ARE DANGEROUS WASTE PERMIT AFFECTING.
3. THE PRESSURE BOUNDARY FOR ALL COMPONENTS ON THIS DRAWING IS QUALITY LEVEL Q AND SEISMIC CATEGORY SC-I, UNLESS OTHERWISE NOTED
4. ALL LINES SHOWN ON THIS DRAWING SHALL BE FREE DRAINING, UNLESS OTHERWISE NOTED.
5. CONNECTION PROVIDED FOR REAGENTS, PLANT WASH, AND SERVICE AIR.
6. ON/OFF VALVES FOR DEMINERALIZED WATER AND PROCESS CONDENSATE HEADERS ARE INTERLOCKED FOR PROPER PROCESS SEQUENCING.

HOLD/OPEN ITEMS:

NONE

REFERENCES:

1. THE REQUIRED OPERATIONAL SEQUENCES, PERMISSIVES, INTERLOCKS, ALARMS AND OPERATOR INTERFACE POINTS ARE FULLY DESCRIBED IN THE UFP SYSTEM LOGIC DIAGRAMS (FUTURE), AND THE UFP SYSTEM DESCRIPTION (FUTURE REVISION).

REV	DESCRIPTION	Q	ORG	CHKD	REVWD	APVD	DATE
0	ISSUED FOR CONSTRUCTION						12/19/08

REVISION HISTORY

RIVER PROTECTION PROJECT
WASTE TREATMENT PLANT
2435 STEVENS CENTER PLACE
RICHLAND, WA 99354

CONTRACT No: DE-AC27-01RV14136

P&ID - PTF
ULTRAFILTRATION PROCESS SYSTEM
UTILITY SERVICES
UFP-BULGE-00006

SCALE: NONE

24590-PTF-M6-UFP-00032003

REV 0

Hanford Facility RCRA Permit Modification Notification Forms
Part III, Operating Unit 11
Integrated Disposal Facility

Index

Page 2 of 7: Permit Condition III.11.I.2.a.iv
Page 3 of 7: Permit Condition III.11.E.1.b
Page 4 of 7: Permit Condition III.11.I.2.a.iv
Page 5 of 7: Permit Condition III.11.I.5.a
Page 6 of 7: Chapter 5.0, §5.5.1.2
Page 7 of 7: Chapter 5.0, §5.5.4.5.1:

Submitted by Co-Operator:

Leonard T. Blackford 4/20/10 Date

Reviewed by DOE Program Office:

Matthew S. McCormick 4/21/2010 Date

Hanford Facility RCRA Permit Modification Notification Form

Unit:	Permit Part
Integrated Disposal Facility	**Part III, Operating Unit 11**

Description of Modification:
Part III, Operating Unit 11, IDF:

PART III, OPERATING UNIT 11 UNIT-SPECIFIC CONDITIONS

Integrated Disposal Facility

This document sets forth the operating conditions for the Integrated Disposal Facility (IDF).

III.11.A COMPLIANCE WITH APPROVED PERMIT

The Permittees shall comply with all requirements set forth in the Integrated Disposal Facility (IDF) Permit conditions, the Appendices specified in Permit Condition III.11.A and the Amendments specified in Permit Conditions III.11.B through III.11.I. All subsections, figures, and tables included in these portions are enforceable unless stated otherwise:

OPERATING UNIT 11:

Chapter 1.0 Part A Form, dated October 1, 2008

Chapter 3.0 Waste Analysis Plan, dated April 9, 2006

Chapter 4.0 Process Information, dated December 31, 2008

Appendix 4A Design Report (as applicable to critical systems), dated March 31, 2008

Appendix 4B Construction Quality Assurance Plan, dated April 9, 2006

Appendix 4C Response Action Plan, dated April 9, 2006

Appendix 4D Technical specifications document (RPP-18-489 Rev 0), dated December 31, 2006

Chapter 5.0 Ground Water Monitoring, dated June 30, 2010~~June 30, 2008~~

Chapter 6.0 Procedure to Prevent Hazards dated December 31, 2008

Addendum J.1 Contingency Plan – Pre-Active Life, dated December 31, 2008

Addendum J.2 Contingency Plan – Active Life, dated December 31, 2008

Chapter 8.0 Personnel Training, dated November 21, 2007

Chapter 11.0 Closure and Post Closure Requirements, dated December 31, 2008

General and Standard Hanford Facility RCRA Permit, WA7 89000 8967 (Permit) conditions (Part I and Part II Conditions) applicable to the IDF are identified in Permit Attachment 3 (Permit Applicability Matrix).

WAC 173-303-830 Modification Class	Class 1	Class 11	Class 2	Class 3
Please mark the Modification Class:		X		

Enter relevant WAC 173-303-830, Appendix I Modification citation number: WAC 173-303-830(3)(d)(i)
Enter wording of WAC 173-303-830, Appendix I Modification citation:
Other modifications: The Permittee requests that the modification be classified and reviewed as a Class [1]1.

Modification Approved/Concur ☒ Yes ☐ Denied (state reason below)
Reason for denial:

Reviewed by Ecology: G. P. Davis 4-15-10
G. P Davis Date

Hanford Facility RCRA Permit Modification Notification Form

Unit:	Permit Part
Integrated Disposal Facility	**Part III, Operating Unit 11**

Description of Modification:
Permit Condition III.11.E.1.b:

III.11.E.1.b After the baseline monitoring is completed, and data is analyzed, the Permittees and Ecology shall assess revisions to Chapter 5.0, Table 5-2. Subsequent samples will be collected ~~semi-~~annually and will include constituents listed in Table 5-2 as approved by Ecology. All data analysis will employ Ecology approved statistical methods pursuant to WAC 173-303-645. Changes to Chapter 5.0 will be subject to the permit modification procedures under WAC 173-303-830.

WAC 173-303-830 Modification Class	Class 1	Class 11	Class 2	Class 3
Please mark the Modification Class:		X		

Enter relevant WAC 173-303-830, Appendix I Modification citation number: C.2
Enter wording of WAC 173-303-830, Appendix I Modification citation:
C.2. Ground Water Protection, Changes in ground water sampling or analysis procedures or monitoring schedule, with prior approval of the director

Modification Approved/Concur [X] Yes [ ] Denied (state reason below)
Reason for denial:

Reviewed by Ecology: G. P. Davis 4-15-10
G. P Davis Date

Hanford Facility RCRA Permit Modification Notification Form

Unit:	Permit Part
Integrated Disposal Facility	**Part III, Operating Unit 11**

Description of Modification:
Permit Condition III.11.I.2.a.iv:

III.11.I.2.a.iv The Permittees shall update the IWTRD consistent with the above requirements for review by Ecology consistent with their respective roles and authority as provided under the TPA. Ecology comments shall be dispositioned through the Review Comment Record (RCR) process and will be reflected in further modeling to modify the IDF ILAW waste acceptance criteria (Chapter 3.0, Waste Analysis Plan) as appropriate. The initial IWTRD shall contain glass formulation data as required by Permit Condition III.11.I.2.a.i, and shall be submitted no later than January, 2007, or if later than this date, as agreed to by Ecology. The performance assessment required by Permit Condition III.11.I.2.a.ii, and the quality assurance/quality control requirements process required by Permit Condition III.11.I.2.a.iii shall be submitted for Ecology review as soon as possible after issuance of the Final Tank Closure and Waste Management EIS and receipt of underlying codes and data packages, and at least 180 days prior to the date DOE expects to receive waste at IDF~~, but in no case later than July, 2010 (or a later date if agreed to by Ecology)~~. At a minimum, the Permittees shall submit updates to the IWTRD to Ecology every five years or more frequently if either of the following conditions exist:

- The Permittees submits a permit modification request allowing additional waste forms to be disposed of at IDF,
- The WTP ~~of~~or other vitrification facility change their glass formulations from those previously included in the IWTRD~~ITRWD~~.

WAC 173-303-830 Modification Class	Class 1	Class 11	Class 2	Class 3
Please mark the Modification Class:		X		

Enter relevant WAC 173-303-830, Appendix I Modification citation number: WAC 173-303-830(3)(d)(i)
Enter wording of WAC 173-303-830, Appendix I Modification citation:
Other modifications: The Permittee requests that the modification be classified and reviewed as a Class [1]1.

Modification Approved/Concur ☒ Yes ☐ Denied (state reason below)
Reason for denial:

Reviewed by Ecology:
G.P. Davis 4-15-10
G. P Davis Date

Hanford Facility RCRA Permit Modification Notification Form

Unit:	Permit Part
Integrated Disposal Facility	**Part III, Operating Unit 11**

Description of Modification:
Permit Condition III.11.I.5.a:

III.11.I.5.a The Permittees must create and maintain a modeling - risk budget tool, which models the future impacts of the planned IDF waste forms (including input from analyse~~is~~s performed as specified in Permit Conditions III.11.I.2.a through III.11.I.2.a.ii) and their impact to underlying vadose and ground water. This ~~model~~ software tool will be submitted for Ecology review as soon as possible after issuance of Final Tank Closure and Waste Management EIS and receipt of underlying codes and data packages, and at least 180 days prior to the date DOE expects to receive waste at IDF ~~but in no case later than July 2010 (or a later date if agreed to by Ecology)~~. The ~~model~~ risk budget tool shall be updated at least every 5 years. The model will be updated more frequently if needed, to support permit modifications or SEPA Threshold Determinations whenever a new waste stream or significant expansion is being proposed for the IDF. This ~~modeling~~ risk budget tool shall be conducted in manner that is consistent with state and federal requirements, and represents ~~a cumulative~~ risk analysis of all waste previously disposed of in the entire IDF (both cell 1 and cell 2) and those wastes expected to be disposed of in the future for the entire IDF to determine cumulative impacts. The groundwater impact should be modeled ~~in a concentration basis~~ to evaluate fate and transport in the groundwater aquifer(s) and should be compared against various performance standards including but not limited to drinking water standards (40 CFR 141 and 40 CFR 143). Ecology will review modeling assumptions, input parameters, and results and will provide comments to the Permittees. Ecology comments shall be dispositioned through the Review Comment Record (RCR) process and will be reflected in further modeling to modify the IDF ILAW waste acceptance criteria as appropriate.

WAC 173-303-830 Modification Class	Class 1	Class [1]1	Class 2	Class 3
Please mark the Modification Class:		X		

Enter relevant WAC 173-303-830, Appendix I Modification citation number: WAC 173-303-830(3)(d)(i)
Enter wording of WAC 173-303-830, Appendix I Modification citation:
Other modifications: The Permittee requests that the modification be classified and reviewed as a Class [1]1.

Modification Approved/Concur ☒ Yes ☐ Denied (state reason below)
Reason for denial:

Reviewed by Ecology:
G. P. Davis 4-15-10
G. P Davis Date

Hanford Facility RCRA Permit Modification Notification Form

Unit:	Permit Part
Integrated Disposal Facility	**Part III, Operating Unit 11**

Description of Modification:
Chapter 5.0, §5.5.1.2:

5.5.1.2 Monitoring Parameters

The parameters to be routinely monitored are listed in Table 5.2. These parameters include the indicator parameters and supplemental parameters.

The indicator parameters will be used to monitor for hazardous constituents reaching the groundwater as a result of IDF operations. Only the indicator parameters are subject to the statistical methods described in Section 5.5.4.7. Total organic carbon and total organic halides are indicator parameters selected to monitor impacts of RCRA regulated organic constituents on the groundwater quality. Specific conductance is selected as an indicator parameter to monitor impacts of metals and anions on groundwater quality. pH is a general indicator of groundwater quality. Specific conductance and pH are measured in the field at the time of sampling. Chromium is included as an indicator parameter because hexavalent chromium is one of the more mobile of the regulated metals to be disposed of at the IDF and should be one of the first constituents to enter groundwater if the regulated facility impacts groundwater.

Analyses of alkalinity, anions, and metals are to provide supplemental data on general groundwater chemistry beneath the IDF. This information aids data interpretation and quality control. Supplemental parameters will not be used in statistical evaluations. Turbidity is analyzed at the well just before sampling and provides an indication of the groundwater condition at the time of sampling.

For the first year of monitoring, all parameters listed in Table 5.2 will be monitored twice each quarter to determine background concentrations. After the first year, indicator and supplemental parameters will be monitored semi-annually. In addition, field measurements of temperature and turbidity will be made at each sampling event.

During the first sampling event at each well for the first year of monitoring, samples will be collected for analysis of the indicator parameters, the supplemental parameters, and the Appendix IX constituents (40 CFR 264) included in IDF Part A Form. After the first sampling event, samples will be collected for analysis of indicator parameters and supplemental parameters only.

After the first year of sampling, if an indicator parameter suggests there is an impact to groundwater, additional samples will be collected to verify the initial results. If a statistically significant increase in any indicator parameter is confirmed, analyses will be made for the regulated parameters in IDF Part A Form.

Monitoring for baseline conditions was completed for the indicator parameters in April 2006 and for the complete Appendix IX list in January 2007. Semi-annual monitoring has continued since that time with the collection of four independent samples each semiannual period. During the Pre-Active life, sampling will continue at the IDF with the collection of one sample each year to maintain the baseline. When the IDF becomes operational, sampling will revert to four independent samples collected each semiannual period.

WAC 173-303-830 Modification Class	Class 1	Class 1	Class 2	Class 3
Please mark the Modification Class:		X		

Enter relevant WAC 173-303-830, Appendix I Modification citation number: C.2.
Enter wording of WAC 173-303-830, Appendix I Modification citation:
C.2. Ground Water Protection, Changes in ground water sampling or analysis procedures or monitoring schedule, with prior approval of the director

Modification Approved/Concur [X] Yes [ ] Denied (state reason below)
Reason for denial:

Reviewed by Ecology:
G. P. Davis 4-15-10
G. P Davis Date

Hanford Facility RCRA Permit Modification Notification Form

Unit:	Permit Part
Integrated Disposal Facility	**Part III, Operating Unit 11**

Description of Modification:

Chapter 5.0, §5.5.4.5.1:

5.5.4.5.1 Sampling Frequency

Under final status regulations, the default sampling procedure states that a sequence of at least four samples from each well (background and compliance wells) must be collected at least semiannually during detection monitoring at an interval that ensures, to the greatest extent technically feasible, that an independent sample is obtained [40 CFR 264.97(g)(1) and (2), WAC 173-303-645 (8)(g)(i) and (ii), and (9)(d)].

The default sampling procedures are adopted for the IDF Active life as follows: four independent samples from each groundwater monitoring well will be sampled for the indicator parameters (Table 5.2) semiannually during the active life of the regulated unit (including the closure period), one per month for four consecutive months followed by two months of non-sampling. The mean of the measurements from the downgradient wells will be compared semiannually to the mean of the distribution of the background data using ANOVA.

Semi-annual monitoring has been accomplished at the IDF since January 2007 with the collection of four independent samples each semiannual period. During the Pre-Active life, sampling will continue at the IDF with the collection of one sample each year to maintain the baseline. During Active life, sampling will revert to four independent samples collected each semiannual period described above.

WAC 173-303-830 Modification Class	Class 1	Class 1	Class 2	Class 3
Please mark the Modification Class:		X		

Enter relevant WAC 173-303-830, Appendix I Modification citation number: C.2.

Enter wording of WAC 173-303-830, Appendix I Modification citation:

C.2. Ground Water Protection, Changes in ground water sampling or analysis procedures or monitoring schedule, with prior approval of the director

Modification Approved/Concur [X] Yes [ ] Denied (state reason below)

Reason for denial:

Reviewed by Ecology:

G. P. Davis 4/15/10

G. P Davis Date

This page intentionally left blank,

Hanford Facility RCRA Permit Modification
Part III, Operating Unit 11
Integrated Disposal Facility

Remove and replace the following sections for Part III, Operating Unit 11:

- Part III, OU-11, Permit Conditions dated December 31, 2008 with Permit Conditions dated June 30, 2010
- Part III, OU-11, Chapter 5.0, Groundwater Monitoring

This page intentionally left blank.

PART III, OPERATING UNIT 11 UNIT-SPECIFIC CONDITIONS
INTEGRATED DISPOSAL FACILITY

This document sets forth the operating conditions for the Integrated Disposal Facility (IDF).

III.11.A COMPLIANCE WITH APPROVED PERMIT

The Permittees shall comply with all requirements set forth in the Integrated Disposal Facility (IDF) Permit conditions, the Appendices specified in Permit Condition III.11.A and the Amendments specified in Permit Conditions III.11.B through III.11.I. All subsections, figures, and tables included in these portions are enforceable unless stated otherwise:

OPERATING UNIT 11:

Chapter 1.0	Part A Form, dated October 1, 2008
Chapter 3.0	Waste Analysis Plan, dated April 9, 2006
Chapter 4.0	Process Information, dated December 31, 2008
Appendix 4A	Design Report (as applicable to critical systems), dated March 31, 2008
Appendix 4B	Construction Quality Assurance Plan, dated April 9, 2006
Appendix 4C	Response Action Plan, dated April 9, 2006
Appendix 4D	Technical specifications document (RPP-18-489 Rev 0), dated December 31, 2006
Chapter 5.0	Ground Water Monitoring, dated June 30, 2010
Chapter 6.0	Procedure to Prevent Hazards dated December 31, 2008
Addendum J.1	Contingency Plan – Pre-Active Life, dated December 31, 2008
Addendum J.2	Contingency Plan – Active Life, dated December 31, 2008
Chapter 8.0	Personnel Training, dated November 21, 2007
Chapter 11.0	Closure and Post Closure Requirements, dated December 31, 2008

General and Standard Hanford Facility RCRA Permit, WA7 89000 8967 (Permit) conditions (Part I and Part II Conditions) applicable to the IDF are identified in Permit Attachment 3 (Permit Applicability Matrix).

III.11.B AMENDMENTS TO THE APPROVED PERMIT

III.11.B.1 Portions of Permit Attachment 4, *Hanford Emergency Management Plan* that are not made enforceable by inclusion in the applicability matrix for that document, are not made enforceable by reference in this document.

III.11.B.2 Permittees must comply with all applicable portions of the Permit. The facility and unit-specific recordkeeping requirements are distinguished in the General Information Portion of the Permit, and are tied to the Permit conditions.

III.11.B.3 The scope of this Permit is restricted to the landfill construction and operation as necessary to dispose of: 1) immobilized low activity waste from the WTP, and 2) the Demonstration Bulk Vitrification System and IDF operational waste as identified in Chapter 4.0. Future expansion of the RCRA trench, or disposal of other wastes not specified in this Permit, is prohibited unless authorized via modification of this Permit.

III.11.B.4 In accordance with WAC 173-303-806(11)(d), this Permit shall be reviewed every five (5) years after the effective date and modified, as necessary, in accordance with WAC 173-303-830(3).

III.11.B.5 Inspection Requirements – Pre-Active Life Period and Active Life Period

III.11.B.5.a The Permittees will conduct inspections of the IDF according to the following requirements:

III.11.B.5.a.1 Prior to the start of the active life of the IDF as defined in WAC 173-303-040, according to Chapter 6.0, Table 6.2.

III.11.B.5.a.2 Following the start of the active life of the IDF as defined in WAC 173-303-040, according to Chapter 6.0, Table 6.2A.

III.11.B.5.b The Permittees will remedy any problems revealed by inspections conducted pursuant to Permit Condition III.11.B.5.a on a schedule, which prevents hazards to the public health and the environment and as agreed to in writing, by Ecology. Where a hazard is imminent or has already occurred, remedial action must be taken immediately.

III.11.B.5.c Reserved

III.11.B.5.d Rainwater Management

III.11.B.5.e Prior to the start of the active life of the IDF, the Permittees will manage the discharge of such water in accordance with the pollution prevention and best management practices required by State Waste Discharge Permit Number ST 4511.

III.11.B.5.e.1 Management of Liquids Collected in the Leachate Collection and Removal System (LCRS), Leak Detection System (LDS), and Secondary Leak Detection System (SLDS) prior to the start of the active life of the IDF.

III.11.B.5.e.2 Permittees shall manage the liquid in the LCRS system in a manner that does not allow the fluid head to exceed 30.5 cm above the flat 50-foot by 50-foot LCRS sump HDPE bottom liner, and the LCRS sump trough, except for storms that exceed the 25-year, 24-hour storm event [(WAC 173-303-665(2)(h)(ii)(B). Liquid with a depth greater than 30.5 cm above the LCRS liner will be removed at the earliest practicable time after detection (not to exceed 5 working days).

III.11.B.5.e.3 Accumulated liquid of pumpable quantities in the LDS and SLDS will be managed in a manner that does not allow the fluid head to exceed 30.5 cm above the LDS liner or SLDS liner [WAC 173-303-665(2)(h)(i)(C)(iii)]. Liquid with a depth greater than 30.5 cm above a liner will be removed at the earliest practicable time after detection (not to exceed 5 working days).

III.11.B.5.e.4 The Permittees will use a flow meter to check if the amount of actual liquid pumped corresponds to the amount accumulated in the leachate collection tank to verify the proper function of the leachate collection and removal sump pumps with each use. The Permittees will document in the IDF portion of the facility operating record appropriate quality assurance/quality control requirements for selection and operation of the flow meter based on the required verification. In addition, the Permittees will evaluate the leachate transfer lines for freeze and thaw damage when ambient conditions may cause such damage to occur. The Permittees will document the methods and criteria used for purposes of this evaluation, along with an appropriate justification.

III.11.B.5.e.5 The Permittee will inspect for liquids after significant rainfall events.

III.11.B.5.e.6 The Permittee will annually verify monitoring gauges and instruments are in current calibration; calibration will be performed annually or more frequently at intervals suggested by the manufacturer (refer to Chapter 4.0, §4.3.7.4)

III.11.B.5.f The Permittees will monitor liquids in the Leachate Collection and Removal System and Leak Detection System to ensure the action leakage rate (Chapter 4.0, Appendix 4A) is not exceeded. The Leachate Collection and Removal System will be inspected per Permit Condition III.11.B.5.c.

III.11.B.5.g Soil Stabilization

Prior to the first placement of waste in the IDF, the Permittee will apply soil stabilization materials as needed to prevent soil erosion in and around the landfill.

III.11.C DESIGN REQUIREMENTS

III.11.C.1 IDF is designed in accordance with WAC 173-303-665 and WAC 173-303-640 as described in Chapter 4.0. Design changes impacting IDF critical systems shall be performed in accordance with Permit Conditions III.11.D.1.d.i and III.11.D.1.d.ii.

III.11.C.1.a IDF Critical Systems include the following: The leachate collection and removal system (LCRS), leachate collection tank (LCT), leak detection system (LDS), liner system (LS), and closure cap. H-2 Drawings for the LCRS, LCT, LDS, and LS are identified in Appendix 4A, Section 3 of this Permit. Drawings for the closure cap will be provided pursuant to Permit Condition III.11.C.1.b.

The Permittees shall construct and operate the IDF in accordance with all specifications contained in RPP-18489 Rev 0. Critical systems, as defined in the definitions section of the Site-Wide RCRA Permit, are identified in Appendix 4A, Section 1 of this Permit.

III.11.C.1.b Landfill Cap

At final closure of the landfill, the Permittees shall cover the landfill with a final cover (closure cap) designed and constructed [WAC 173-303-665(6), WAC 173-303-806(4)(h)] to: Provide long-term minimization of migration of liquids through the closed landfill; Function with minimum maintenance; Promote drainage and minimize erosion or abrasion of the cover; Accommodate settling and subsidence so that the cover's integrity is maintained; and have a permeability less than or equal to the permeability of any bottom liner system or natural sub soils present.

III.11.C.1.c Compliance Schedule

Proposed conceptualized final cover design is presented in Chapter 11, Closure and Financial Assurance. Six months prior to start of construction of IDF landfill final cover (but no later than 6 months prior to acceptance of the last shipment of waste at the IDF), the Permittees shall submit IDF landfill final cover design, specifications and CQA plan to Ecology for review and approval. No construction of the final cover may proceed until Ecology approval of the final design is given, through a permit modification.

III.11.C.1.d The Permittees shall notify Ecology at least sixty (60) calendar days prior to the date it expects to begin closure of the IDF landfill in accordance with WAC 173-303-610(c).

III.11.C.2 Design Reports

III.11.C.2.a New Tank Design Assessment Report

Permittees shall generate a written report in accordance with WAC 173-303-640(3)(a), providing the results of the leachate collection tank system design assessment. The report shall be reviewed and certified by an Independent Qualified Registered Professional Engineer (IQRPE)[1] in accordance with WAC-173-303-810(13)(a).

[1] "Independent qualified registered professional engineer," as used here and elsewhere with respect to Operating Unit 11, means a person who is licensed by the state of Washington, or a state which has reciprocity with the state of Washington as defined in RCW 18.43.100, and who is not an employee of the owner or operator of the facility for which construction or modification certification is required. A qualified professional engineer is an engineer with expertise in the specific area for which a certification is given.

III.11.C.2.b Compliance Schedule

Permittees shall submit the leachate collection tank design assessment report to Ecology along with the IQRPE certification, prior to construction of any part of the tank system including ancillary equipment.

III.11.D CONSTRUCTION REQUIREMENTS

III.11.D.1 Construction Quality Assurance

III.11.D.1.a Ecology shall provide field oversight during construction of critical systems. In cases where an Engineering Change Notice (ECN) and/or Non Conformance Report (NCR) are required, Ecology and the Permittees shall follow steps for processing changes to the approved design per Permit Conditions III.11.D.1.d.i and III.11.D.1.d.ii.

III.11.D.1.b Permittees shall implement the Construction Quality Assurance Plan (CQA plan) (Appendix 4B of the permit) during construction of IDF.

III.11.D.1.b.1 The Permittees will not receive waste in the IDF until the owner or operator has submitted to Ecology by certified mail or hand delivery a certification signed by the CQA officer that the approved CQA plan has been successfully carried out and that the unit meets the requirements of WAC 173-303-665(2)(h) or (j); and the procedure in WAC 173-303-810(14)(a) has been completed. Documentation supporting the CQA officer's certification shall be furnished to Ecology upon request.

III.11.D.1.c Construction inspection reports

Permittees shall submit a report documenting the results of the leachate tank installation inspection. This report must be prepared by an independent, qualified installation inspector or a professional independent, qualified, registered, professional engineer either of whom is trained and experienced in the proper installation of tank systems or components. The Permittees will remedy all discrepancies before the tank system is placed in use. This report shall be submitted to Ecology 90 days prior to IDF operation and be included in the IDF Operating Record. [WAC 173-303-640(3)(h)].

III.11.D.1.d ECN/NCR Process for Critical Systems

Portions of the following conditions for processing engineering change notices and non-conformance reporting were extracted from and supersede Site Wide General Permit Condition II.L.

III.11.D.1.d.1 Engineering Change Notice for Critical Systems

During construction of the IDF, the Permittees shall formally document changes to the approved designs, plans, and specifications, identified in Appendices 4A, 4B, 4C, and 4D of this permit, with an Engineering Change Notice (ECN). The Permittees shall maintain all ECNs in the IDF unit-specific Operating Record and shall make them available to Ecology upon request or during the course of an inspection. The Permittees shall provide to Ecology copies of proposed ECNs affecting any critical system within five (5) working days of initiating the ECN. Identification of critical systems is included in Permit Condition III.11.C.1 and Appendix 4A of this permit. Within five (5) working days,

Ecology will review a proposed ECN modifying a critical system and inform the Permittees whether the proposed ECN, when issued, will require a Class 1, 2, or 3 Permit modification.

III.11.D.1.d.2 Non-conformance Reporting for Critical Systems

III.11.D.1.d.2.a During construction of the IDF, the Permittees shall formally document with a Nonconformance Report (NCR), any work completed which does not meet or exceed the standards of the approved design, plans and specifications, identified in Appendices 4A, 4B, 4C and 4D of this Permit. The Permittees shall maintain all NCRs in the IDF unit-specific Operating Record and shall make them available to Ecology upon request, or during the course of an inspection.

III.11.D.1.d.2.b The Permittees shall provide copies of NCRs affecting any critical or regulated system to Ecology within five (5) working days after identification of the nonconformance. Identification of critical systems is included in Permit Condition III.11.C.1 and Appendix 4A of this permit. Ecology will review a NCR affecting a critical system and notify the Permittees within five (5) working days, in writing, whether a Permit modification is required for any nonconformance, and whether prior approval is required from Ecology before work proceeds, which affects the nonconforming item.

III.11.D.1.d.2.c As-Built Drawings

Upon completing construction of IDF, the Permittees shall produce as-built drawings of the project, which incorporate the design and construction modifications resulting from all project ECNs and NCRs, as well as modifications made pursuant to WAC 173-303-830. The Permittees shall place the drawings into the Operating Record within twelve (12) months of completing construction.

III.11.D.2 The Permittees shall not reduce the minimum frequency of destructive testing less than one test per 500 feet of seam, without prior approval in writing from Ecology

III.11.E GROUND WATER AND GROUND WATER MONITORING

Ground water shall be monitored in accordance with WAC 173-303 and the provisions contained in the Ecology-approved facility ground water monitoring plan (Chapter 5.0). All wells used to monitor the ground water beneath the unit shall be constructed in accordance with the provisions of WAC 173-160.

III.11.E.1 Ground Water Monitoring Program

III.11.E.1.a Prior to initial waste placement in the IDF landfill, the Permittees shall sample all ground water monitoring wells in the IDF network twice quarterly for one first year to determine baseline conditions. For the first sampling event (and only the first), samples for each well will include all constituents in 40 CFR 264 Appendix IX. Thereafter, sampling will include only those constituents as specified in Chapter 5.0, Table 5-2: chromium (filtered and unfiltered the first year to compare results), specific conductance, TOC, TOX, and pH. Other constituents to be monitored but not statistically compared include alkalinity, anions, ICP metals, and turbidity. These will provide important information on hydrogeologic characteristics of the aquifer and may provide indications of encroaching contaminants from other facilities not associated with IDF.

III.11.E.1.b After the baseline monitoring is completed, and data is analyzed, the Permittees and Ecology shall assess revisions to Chapter 5.0, Table 5-2. Subsequent samples will be collected annually and will include constituents listed in Table 5-2 as approved by Ecology. All data analysis will employ Ecology approved statistical methods pursuant to WAC 173-303-645. Changes to Chapter 5.0 will be subject to the permit modification procedures under WAC 173-303-830.

III.11.E.1.c All constituents used as tracers to assess performance of the facility through computer modeling should be sampled at least annually to validate modeling results. Groundwater monitoring data and analytes to be monitored will be reviewed periodically as defined in Chapter 5.0 of this Permit.

III.11.E.1.d Upon Ecology approval of the leachate monitoring plan, leachate monitoring and groundwater monitoring activities should be coordinated as approved by Ecology to form an effective and efficient means of monitoring the performance of the IDF facility.

III.11.E.1.e Groundwater monitoring data shall be reported to Ecology annually by July 30.

III.11.F LEACHATE COLLECTION COMPONENT MANAGEMENT

Permittees shall design, construct, and operate all leachate collection systems to minimize clogging during the active life and post closure period

III.11.F.1 Leachate Collection and Removal System (LCRS)

III.11.F.1.a At least 120 days prior to initial waste placement in the IDF, the Permittees shall submit a Leachate monitoring plan to Ecology for review, approval, and incorporation into the permit. Upon approval by Ecology, this plan will be incorporated into the Permit as a class 1' modification. The Permittees shall not accept waste into the IDF until the requirements of the leachate monitoring plan have been incorporated into this permit.

III.11.F.1.b Leachate in the LCRS (primary sump) shall be sampled and analyzed monthly for the first year of operation of the facility and quarterly thereafter (pursuant to WAC 173-303-200). Additionally, leachate shall be sampled and analyzed to meet waste acceptance criteria at the receiving treatment storage and disposal facility.

III.11.F.1.c Permittees shall manage the leachate in the LCRS system in a manner that does not allow the fluid head to exceed 30.5 cm above the flat 50-foot by 50-foot LCRS sump HDPE bottom liner except for rare storm events as discussed in Chapter 4.0, §4.3.6.1 and the LCRS sump trough [(WAC 173-303-665(2)(h)(ii)(B). Liquid with a depth greater than 30.5 cm above the SLDS liner will be removed at the earliest practicable time after detection (not to exceed 5 working days).

III.11.F.1.d After initial waste placement, Permittees shall manage all leachate from the permitted cell as dangerous waste (designated with Dangerous Waste Number F039) in accordance with WAC 173-303.

III.11.F.2 Monitoring and Management of Leak Detection System (LDS/ secondary sump)

III.11.F.2.a Permittees shall manage the leachate in the LDS system in a manner that does not allow the fluid head to exceed 30.5 cm above the LDS liner (WAC 173-303-665(2)(h)(ii)(B).

III.11.F.2.b Permittees shall monitor and record leachate removal for comparison to the Action Leakage Rate (ALR) as described in Appendix 4C, Response Action Plan. If the leachate flow rate in the LDS exceeds the ALR, the Permittees shall implement the Ecology approved response action plan (Appendix 4C).

III.11.F.2.c Leachate from the LDS (secondary sump) shall be sampled semi-annually if a pumpable quantity of leachate is available for sampling.

III.11.F.2.d Accumulated liquid of pumpable quantities in the LDS will be managed in a manner that does not allow the fluid head to exceed 30.5 cm above the LDS liner [WAC 173-303-665(2)(h)(i)(C)(iii)]. Liquid with a depth greater than 30.5 cm above the LDS liner will be removed at the earliest practicable time after detection (not to exceed 5 working days).

III.11.F.3 Monitoring and Management of the Secondary Leak Detection System (SLDS)

III.11.F.3.a At least 180 days prior to initial waste placement, the, the Permittees shall submit to Ecology for approval a sub-surface liquids monitoring and operations plan (SLMOP) for the SLDS to include the following: monitoring frequency, pressure transducer configuration, liquid collection and storage processes, sampling and analysis and response actions. The SLMOP shall be approved by Ecology prior to placement of waste in the IDF, and incorporated into the Permit as a Class 1' modification.

III.11.F.3.b Permittees shall monitor and manage the SLDS (tertiary sump) pursuant to the approved sub-surface liquids monitoring and operations plan.

III.11.F.3.c Accumulated liquid of pumpable quantities in the SLDS will be managed in a manner that does not allow the fluid head to exceed 30.5 cm above the SLDS liner [WAC 173-303-665(2)(h)(i)(C)(iii)]. Liquid with a depth greater than 30.5 cm above the SLDS liner will be removed at the earliest practicable time after detection (not to exceed 5 working days).

III.11.F.3.d After initial waste placement, Permittees shall manage all leachate from the permitted cell as dangerous waste in accordance with WAC 173-303.

III.11.G CONSTRUCTION WATER MANAGEMENT

III.11.G.1 During construction, it is anticipated that liquids will accumulate on top of all liners and sumps. Permittees shall manage the construction wastewater in accordance with State Waste Discharge Permit ST 4511.

III.11.G.2 Liquid accumulation within the LCRS, LDS, and SLDS prior to initial waste placement will be considered construction wastewater (i.e., not leachate).

III.11.H LANDFILL LINER INTEGRITY MANAGEMENT & LANDFILL OPERATIONS

III.11.H.1 Permittees shall design, construct, and operate the landfill in a manner to protect the liners from becoming damaged. Temperature: Waste packages with elevated temperatures shall be evaluated and managed in a manner to maintain the primary (upper) liner below the design basis temperature for the liner (e.g.,160 F). Weight: Waste, fill material and closure cover shall be placed in a manner that does not exceed the allowable load bearing capacity of the liner (weight per area 13,000 lb/ft^2). Puncture: At least 3 feet of clean backfill material shall be placed as an operations layer over the leachate collection and removal system to protect the system from puncture damage.

III.11.H.1.a All equipment used for construction and operations inside of the IDF shall meet the weight limitation as specified in Permit Condition III.H.1. Only equipment that can be adequately supported by the operations layer as specified in Permit Condition III.H.1 (e.g., will not have the potential to puncture the liner) shall be used inside of the IDF. All equipment used for construction and operations outside of the IDF shall not damage the berms. Changes to any equipment will follow the process established by condition II.R of the site wide permit. Within 120 days from the effective date for the permit, a process for demonstrating compliance with this condition shall be submitted for review by Ecology. This process will be incorporated into appropriate IDF operating procedures prior to IDF operations.

III.11.H.2 The Permittees shall construct berms and ditches to prevent run-on and run-off in accordance with the requirements of Section 4.3.8 of this permit. Before the first placement of waste in the IDF, the Permittees shall submit to Ecology a final grading and topographical map on a scale sufficient to identify berms and ditches used to control run-on and run-off. Upon approval, Ecology will incorporate these maps into the permit as a Class 1' modification.

III.11.H.3 The Permittees shall operate the RCRA IDF Cell (Cell1) in accordance with WAC 173-303-665(2) and the operating practices described in Chapters 3.0, 4.0, 6.0, 7.0, 8.0 and Appendix 4A, §1, subsection 7, except as otherwise specified in this Permit.

III.11.H.4 The Permittees shall maintain a permanent and accurate record of the three-dimensional location of each waste type, based on grid coordinates, within the RCRA IDF Cell (Cell1) in accordance with WAC 173-303-665(5).

III.11.I WASTE ACCEPTANCE CRITERIA

The only acceptable waste form approved for disposal at the RCRA cell of IDF are IDF operational waste, Immobilized Low Activity Waste (ILAW) in glass form from the Waste Treatment Plant (WTP) Low Activity Waste (LAW) Vitrification facility and ILAW from the Bulk Vitrification Research Demonstration and Development facility (up to 50 boxes). Specifics about waste acceptance criteria for each of these wastes are detailed below.

No other waste forms may be disposed at the RCRA cell of IDF unless authorized via a Final Permit modification decision. Requests for Permit modifications must be accompanied by an analysis adequate for Ecology to comply with SEPA, as well as by a risk assessment and groundwater modeling to show the environmental impact. Permit Condition III.11.I.5 outlines the process by which waste sources in the IDF are modeled in an ongoing risk budget and a ground water impact analysis.

III.11.I.1 Six months prior to IDF operations Permittees shall submit to Ecology for review, approval, and incorporation into the permit, all waste acceptance criteria to address, at a minimum, the following: physical/chemical criteria, liquids and liquid containing waste, land disposal restriction treatment standards and prohibitions, compatibility of waste with liner, gas generation, packaging, handling of packages, minimization of subsidence.

III.11.I.1.a All containers/packages shall meet void space requirements pursuant to WAC 173-303-665(12).

III.11.I.1.b Compliance Schedule

III.11.I.1.b.1 Six months prior to IDF operations, the Permittees shall submit to Ecology for review, approval, and incorporation into the permit any necessary modifications to the IDF Waste Acceptance Plan (Appendix 3A of the permit application, DOE/RL-2003-12, Rev 1).

III.11.I.2 ILAW Waste Acceptance Criteria

The only ILAW forms acceptable for disposal at IDF are: (1) approved glass canisters that are produced in accordance with the terms, conditions, and requirements of the WTP portion of the Permit, and (2) the 50 bulk vitrification test boxes as specified in the DBVS test plans.

To assure protection of human health and the environment, it is necessary that the appropriate quality of glass be disposed at IDF. The LDR Treatment Standard for eight metals (arsenic, barium, cadmium, chromium, lead, mercury, selenium and silver), when associated with High Level Waste, is HLVIT (40 CFR 268). Because these metals are constituents in the Hanford Tanks Waste, the LDR standard for ILAW disposed to IDF is HLVIT.

For any ILAW glass form(s) that DOE intends to dispose of in IDF, DOE will provide to Ecology for review, an ILAW Waste Form Technical Requirements Document (IWTRD). The IWTRD will contain:

III.11.I.2.a WTP ILAW Waste Acceptance Criteria

III.11.I.2.a.1 A description of each specific glass formulation that DOE intends to use including a basis for why each specific formulation is proposed for use, which specific tank wastes the glass formulation is proposed for use with, the characteristics of the glass that are key to satisfactory performance (e.g., VHT, PCT, and TCLP and/or other approved performance testing methodologies that the parties agree are appropriate and necessary), the range in key characteristics anticipated if the specific glass formulation is produced on a production basis with tank waste, and the factors that DOE must protect against in producing the glass to ensure the intended glass characteristics will exist in the actual ILAW.

III.11.I.2.a.2 A performance assessment that provides a reasonable basis for assurance that each glass formulation will, once disposed of in IDF in combination with the other waste volumes and waste forms planned for disposal at the entire Integrated Disposal Facility, be adequately protective of human health and the environment; and will not violate or be projected to violate all applicable state and federal laws, regulations and environmental standards.

Within 60 days of a request by Ecology, the Permittees shall provide a separate model run using Ecology's assumptions and model input.

III.11.I.2.a.3 A description of production processes including management controls and quality assurance/quality control requirements that assure that glass produced for each formulation will perform in a reasonably similar manner to the waste form assumed in the performance assessment for that formulation.

The Permittees shall update the IWTRD consistent with the above requirements for review by Ecology consistent with their respective roles and authority as provided under the TPA. Ecology comments shall be dispositioned through the Review Comment Record (RCR) process and will be reflected in further modeling to modify the IDF ILAW waste acceptance criteria (Chapter 3.0, Waste Analysis Plan) as appropriate. The initial IWTRD shall contain glass formulation data as required by Permit Condition III.11.I.2.a.i, and shall be submitted no later than January 2007, or if later than this date, as agreed to by Ecology. The performance assessment required by Permit Condition III.11.I.2.a.ii, and the quality assurance/quality control requirements process required by Permit Condition III.11.I.2.a.iii shall be submitted for Ecology review as soon as possible after issuance of the Final Tank Closure and Waste Management EIS and receipt of underlying codes and data packages, and at least 180 days prior to the date DOE expects to receive waste at IDF. At a minimum, the Permittees shall submit updates to the IWTRD to Ecology every five years or more frequently if either of the following conditions exists:

- The Permittees submits a permit modification request allowing additional waste forms to be disposed of at IDF,
- The WTP or other vitrification facility change their glass formulations from those previously included in the IWTRD.

III.11.I.2.a.4 The Permittees shall not dispose of any WTP ILAW not described and evaluated in the IWTRD.

III.11.I.3 ILAW Waste Acceptance Criteria Verification

III.11.I.3.a Six months prior to disposing of ILAW in the IDF, the Permittees will submit an ILAW verification plan to Ecology for review and approval. This plan will be coordinated with WTP, Ecology, and the Permittees personnel. This plan will outline the specifics of verifying ILAW waste acceptance through WTP operating parameters, and/or glass sampling. The Plan will include physical sampling requirements for batches, glass formulations, and/or feed envelopes.

III.11.I.4 Demonstration Bulk Vitrification System (DBVS) Bulk Vitrification Waste Acceptance Criteria

III.11.I.4.a Bulk Vitrification waste forms that are acceptable to be disposed of at IDF are up to 50 boxes of vitrified glass produced pursuant to the DBVS RD&D Permit from processing Hanford Tank S-109 tank waste.

III.11.I.4.b If Bulk Vitrification is selected as a technology to supplement the Waste Treatment Plant, the IDF portion of the Permit will need to be modified to accept Bulk Vitrification Full Scale production waste forms. This modification will need to be accompanied by appropriate TPA changes (per M-062 requirements) and adequate risk assessment information sufficient for the Department of Ecology to meet its SEPA obligations.

III.11.I.4.c DBVS Waste Acceptance Verification will occur on 100% of the waste packages. Pursuant to the DBVS RD&D Permit, a detailed campaign test report will be produced and submitted to Ecology detailing results of all testing performed on each waste package that is produced. IDF personnel shall review these reports to verify that the waste packages meet IDF Waste Acceptance Criteria.

III.11.I.4.d The Permittees shall not dispose of any waste forms that do not comply with all appropriate and applicable treatment standards, including all applicable Land Disposal Restrictions (LDR).

III.11.I.5 Modeling – Risk Budget Tool

III.11.I.5.a The Permittees must create and maintain a modeling - risk budget tool, which models the future impacts of the planned IDF waste forms (including input from analyses performed as specified in Permit Conditions III.11.I.2.a through III.11.I.2.a.ii) and their impact to underlying vadose and ground water. This software tool will be submitted for Ecology review as soon as possible after issuance of Final Tank Closure and Waste Management EIS and receipt of underlying codes and data packages, and at least 180 days prior to the date DOE expects to receive waste at IDF. The risk budget tool shall be updated at least every 5 years. The model will be updated more frequently if needed, to support permit modifications or SEPA Threshold Determinations whenever a new waste stream or significant expansion is being proposed for the IDF. This risk budget tool shall be conducted in manner that is consistent with state and federal requirements, and represents a risk analysis of all waste previously disposed of in the entire IDF (both cell 1 and cell 2) and those wastes expected to be disposed of in the future for the entire IDF to determine cumulative impacts. The groundwater impact should be modeled to evaluate fate and transport in the groundwater aquifer(s) and should be compared against various performance standards including but not limited to drinking water standards (40 CFR 141 and 40 CFR 143). Ecology will review modeling assumptions, input parameters, and results and will provide comments to the Permittees. Ecology comments shall be dispositioned through the Review Comment Record (RCR) process and will be reflected in further modeling to modify the IDF ILAW waste acceptance criteria as appropriate.

III.11.I.5.a.1 The modeling-risk budget tool will include a sensitivity analysis reflecting parameters and changes to parameters as requested by Ecology.

III.11.I.5.a.2 If these modeling efforts indicate results within 75% of a performance standard [including but not limited to federal drinking water standards (40 CFR 141 and 40 CFR 143)], Ecology and the Permittees will meet to discuss mitigation measures or modified waste acceptance criteria for specific waste forms.

III.11.I.5.a.3 When considering all the waste forms to be disposed of in IDF, the Permittees shall not dispose of any waste that will result (through forward looking modeling or in real groundwater concentrations data) in a violation of any state or federal regulatory limit, specifically including but not limited to drinking water standards for any constituent as defined in 40 CFR 141 and 40 CFR 143.

III.11.I.6 The Permittees shall not dispose of any waste that is not in compliance with state and federal requirements as identified in Chapter 13.0.

III.11.I.6.a In accordance with DOE's authority under the Atomic Energy Act of 1954, as amended and other applicable law, prior to disposing of any mixed immobilized low-activity waste (ILAW) in the IDF, DOE will certify to the State of Washington that it has determined that such ILAW is not high-level waste and meets the criteria and requirements outlined in DOE's consultation with the U.S. Nuclear Regulatory Commission beginning in 1993 (Letter from R.M. Bernero, USNRC to J. Lytle, USDOE, dated March 2, 1993; Letter from J. Kinzer, USDOE, to C. J. Paperiello, USNRC, Classification of Hanford Low-Activity Tank Waste Fraction, dated March 7, 1996; and Letter from C.J. Paperiello, USNRC, to J. Kinzer, USDOE, Classification of Hanford Low-Activity Tank Waste Fraction, dated June 9, 1997). While the requirement to provide such certification is an enforceable obligation of this permit, the provision of such certification does not convey, or purport to convey, authority to Ecology to regulate the radioactive hazards of the waste under this permit.

III.11.I.7 IDF Operational Waste Acceptance Criteria

III.11.I.7.a IDF operational activities (including decontamination, cleanup, and maintenance) will generate a small amount of waste. Waste that can meet IDF waste acceptance without treatment will be disposed of at the IDF. All other IDF operational waste will be managed pursuant to WAC 173-303-200.

This page intentionally left bank.

Chapter 5.0 **Groundwater Monitoring**

5.0 GROUNDWATER MONITORING 5.1
5.1 EXEMPTION FROM GROUNDWATER PROTECTION REQUIREMENT 5.1
5.2 INTERIM STATUS PERIOD GROUNDWATER MONITORING DATA 5.1
5.3 AQUIFER IDENTIFICATION 5.1
5.3.1 Geology of the IDF Site 5.1
5.3.1.1 Structural Framework 5.2
5.3.1.2 Stratigraphy 5.2
5.3.2 Groundwater Hydrology 5.4
5.4 CONTAMINANT PLUME DESCRIPTION 5.5
5.4.1 Groundwater Contamination 5.5
5.4.2 Vadose Zone Contamination 5.5
5.5 DETECTION MONITORING PROGRAM 5.6
5.5.1 Indicator Parameters, Waste Constituents, Reaction Products to be Monitored 5.6
5.5.1.1 Regulated Constituents 5.6
5.5.1.2 Monitoring Parameters 5.6
5.5.1.3 Dangerous Waste Characterization 5.7
5.5.1.4 Behavior of Constituents 5.7
5.5.1.5 Detectability 5.7
5.5.2 Groundwater Monitoring Program 5.8
5.5.2.1 Description of Wells 5.8
5.5.2.2 Equipment Decontamination 5.9
5.5.2.3 Representative Samples 5.9
5.5.2.4 Locations of Background Groundwater Monitoring Wells that are not Upgradient 5.9
5.5.3 Background Values 5.9
5.5.3.1 Plan for Establishing Groundwater Quality Data 5.9
5.5.4 Sampling, Analysis and Statistical Procedures 5.10
5.5.4.1 Sample Collection 5.10
5.5.4.2 Sample Preservation and Shipment 5.11
5.5.4.3 Analytical Procedures 5.11
5.5.4.4 Chain of Custody 5.12
5.5.4.5 Additional Requirements for Compliance Point Monitoring 5.12
5.5.4.6 Annual Determination 5.14
5.5.4.7 Statistical Determination 5.14
5.5.5 Compliance Monitoring Program 5.17
5.5.6 Corrective Action Program 5.18
5.6 REFERENCES 5.31

Figures

Figure 5.1. Location of the IDF and Nearby Boreholes 5.19
Figure 5.2. Geologic Map of the 200 East and 200 West Areas and Vicinity 5.20
Figure 5.3. Stratigraphy of the Hanford Site 5.21
Figure 5.4. Cross-Section through the IDF Site 5.22
Figure 5.5. Water Table Map for the Hanford Site 200 East Area 5.22
Figure 5.6. Hydrographs for Wells Near the IDF Site 5.24
Figure 5.7. Concentration versus Time for Nitrate in Wells 299-E24-7 and 299-E24-18 ..... 5.25
Figure 5.8. Sequence for Installation of Downgradient Monitoring Wells at the IDF 5.26

Tables

Table 5.1. Water Levels in Groundwater Wells in the Vicinity of the IDF Site 5.27
Table 5.2. Monitored Constituents for the IDF 5.27
Table 5.3. Expected Behavior of Selected Regulated Constituents/Materials for the IDF 5.28
Table 5.4. Analytical Methods and Method Detection Limits for Regulated Constituents and Indicator Parameters 5.30

5.0 GROUNDWATER MONITORING

The IDF will be an RCRA-compliant landfill (i.e., a double lined trench with leachate collection system). This chapter describes the groundwater monitoring plan for the IDF and addresses the requirements of RCRA, as described in 40 CFR 264, Subpart F, by reference of WAC 173-303-645(3). Figure 5.1 shows the location of the IDF and surrounding groundwater wells in the 200 East Area. This chapter is designed to meet final status detection-level groundwater monitoring requirements for the IDF. This groundwater monitoring plan is based on the application of a modified data quality objectives (EPA QA/G-4) process to a conceptual model, and the most recent evaluations of groundwater hydrology and chemistry at the site.

This plan describes the characteristics of the waste to be disposed in the IDF and the site geology and hydrology used to design and operate the monitoring well network and to interpret the groundwater data. The historic groundwater chemistry from wells near the IDF site is provided. Much of the information pertaining to waste characterization is taken from HNF-4921 and that pertaining to hydrogeology from PNNL-11957, PNNL-12257, PNNL-13652, and PNNL-14029.

The plan includes a description of network well locations, well construction, sample constituents, and sampling frequency for detection-level groundwater monitoring. Procedures for determination of compliance point groundwater quality also are included. Finally, this plan provides the basis for rapid development of a compliance monitoring plan if a validated exceedance of an indicator parameter is found. This plan controls initial baseline monitoring and subsequent detection level monitoring only for the IDF.

Source, special nuclear, and byproduct materials as defined by the *Atomic Energy Act of 1954*, as amended, are regulated at DOE facilities exclusively by DOE acting pursuant to its AEA authority. These materials are not subject to regulation by the State of Washington. All information contained herein and related to, or describing AEA-regulated materials and processes in any manner may not be used to create conditions or other restrictions set forth in any permit, license, order, or any other enforceable instrument. DOE asserts that pursuant to the AEA, it has sole and exclusive responsibility and authority to regulate source, special nuclear and by-product materials at DOE-owned nuclear facilities. Information contained herein on radionuclides is provided for process description purposes only.

5.1 EXEMPTION FROM GROUNDWATER PROTECTION REQUIREMENT

An exemption is not requested.

5.2 INTERIM STATUS PERIOD GROUNDWATER MONITORING DATA

The IDF will be a new facility constructed in the 200 East Area. Interim status groundwater monitoring is not applicable.

5.3 AQUIFER IDENTIFICATION

The following sections discuss geology and hydrology.

5.3.1 Geology of the IDF Site

The 200 East Area lies on the Cold Creek bar, a geomorphic remnant of the cataclysmic, glacial related floods of the Pleistocene Epoch. As the floodwaters raced across the lowlands of the Pasco Basin and Hanford Site, floodwaters lost energy and began to deposit sand and gravel. The 200 Area Plateau is one of the most prominent deposits. The 200 Area Plateau lies just southwest of one of the major flood channels across the Hanford Site that forms the topographic lowland south of Gable Mountain.

Borehole data provide the principal source of geologic, hydrologic, and groundwater information for the 200 East Area and the IDF site. Numerous boreholes (both vadose zone boreholes and groundwater monitoring wells) have been drilled in the 200 East Area for groundwater monitoring and waste management studies (Figure 5.1 shows the location of groundwater wells near the IDF site.) However, data are limited within the IDF site primarily because no previous construction or waste disposal activities

have occurred in this part of the Hanford Facility. Most boreholes in the 200 East Area have been drilled using the cable tool method and either a hard tool or drive barrel to advance the hole. Some boreholes have been drilled by rotary and wire line coring methods. More recently, boreholes in the area have been drilled, and in five cases cored, by percussion hammer methods. Geologic logs are based on examination of drill core, chips, and cuttings from these boreholes. Chip samples typically are taken at 1.5-meter intervals and routinely archived at the Hanford Geotechnical Sample Library.

5.3.1.1 Structural Framework

The IDF site will be located south of the Gable Mountain segment of the Umtanum Ridge anticline and about 3 kilometers north of the axis of the Cold Creek syncline, which controls the structural grain of the basalt bedrock and the Ringold Formation. The basalt surface and Ringold Formation trend roughly southeast-northwest parallel to the major geologic structures of the site. As a result, the Ringold Formation and the underlying Columbia River Basalt Group gently dip to the south off the Umtanum Ridge anticline into the Cold Creek syncline.

Geologic mapping on the Hanford Site and examination of drill core and borehole cuttings in the area have not identified any faults in the vicinity of the IDF site (DOE/RW-0164). The closest known faults are along the Umtanum Ridge-Gable Mountain structure north of the disposal site and the May Junction fault east of the site (Figure 5.2).

5.3.1.2 Stratigraphy

The basalt and post-basalt stratigraphy for the IDF site is shown in Figure 5.3. Approximately 137 to 167 meters of suprabasalt sediments overlie the basalt bedrock at the site.

Basalt Bedrock. Previous studies (RHO-BWI-ST-14; Reidel and Fecht 1994) have shown that the youngest lava flows of the Columbia River Basalt Group at the 200 East Area are those of the 10.5 million year old Elephant Mountain Member. This member underlies the entire 200 East Area and surrounding area and forms the base of the suprabasalts aquifer. No erosional windows in the basalt are known or suspected to occur in the area of the IDF site.

Ringold Formation. Few boreholes penetrate the entire Ringold Formation at the IDF site so available data are limited. The Ringold Formation reaches a maximum thickness of 95 meters on the west side of the site and thins eastward. The member of Wooded Island (Figure 5.3) is the only member of the Ringold Formation in the 200 East Area. The deepest Ringold Formation unit encountered is the lower gravel, unit A. Lying above unit A is the lower mud unit and overlying the lower mud unit is upper gravel, unit E. The sand and silt units of the members of Taylor Flat and Savage Island of the Ringold Formation are not present at the IDF site. Unit A and unit E are equivalent to the Pliocene-Miocene continental conglomerates (Reidel and Fecht 1994). The lower mud unit is equivalent to the Pliocene-Miocene continental sand, silt, and clay beds (Reidel and Fecht 1994).

Only three boreholes have penetrated unit A in the area of the IDF site. Unit A is 19 meters thick on the west side of the site and thins to the northeast. Unit A is partly to well cemented conglomerate consisting of both felsic and basaltic clasts in a sandy matrix and is interpreted as a fluvial gravel facies (Lindsey 1996). There are minor beds of yellow to white interbedded sand and silt. Green colored, reduced-iron stain is present on some grains and pebbles. Although the entire unit appears to be cemented, the zone produced abundant high quality water in borehole 299-E17-21 (PNNL-11957).

Nineteen meters of the lower mud unit were encountered in one borehole at the IDF site (PNNL-11957). The upper most 1-meter or so consists of a yellow mud to sandy mud. The yellow mud grades downward into about 10 meters of blue mud. The blue mud, in turn, grades down into 7 meters of brown mud with organic rich zones and occasional wood fragments. The lower mud unit is absent in the center of the site (northeast of borehole 299-E24-7 on Figure 5.4).

Unit E is described as a sandy gravel to gravelly sand. Unit E is interpreted to consist of as much as 15 meters of conglomerate with scattered large pebbles and cobbles up to 25 centimeters in size in a sandy matrix. The gravel consists of both felsic and basaltic rocks that are well rounded with a sand

matrix supporting the cobbles and pebbles. Cementation of this unit ranges from slight to moderate. The upper contact of unit E is not identified easily at the IDF site. In the western part of the study area, unconsolidated gravels of the Hanford formation directly overly the Ringold Formation unit E gravels, making exact placement of the contact difficult. The dominance of basalt and the absence of cementation in the Hanford formation are the key criteria used to distinguishing these (PNNL-11957). In the central and northeast part of the area, unit E has been eroded completely. Unconsolidated gravels and sands typical of the Hanford formation replace unit E.

Unconformity at the Top of the Ringold Formation. The surface of the Ringold Formation is irregular in the area of the IDF site. A northwest-southeast trending erosional channel or trough (the Columbia River/Missoula flood channel) is centered through the northeast portion of the site. The trough is deepest near borehole 299-E24-21 in the northern part of the site (PNNL-13652). This trough is interpreted as part of a larger trough under the 200 East Area resulting from scouring by the Missoula floods. Borehole 299-E17-21, located at the southwest corner of the IDF site, is at the west side of the channel where approximately 46 meters of Ringold Formation have been removed and replaced by Hanford formation gravels. Boreholes 299-E17-25 and 299-E17-23, located along the southeastern edge of the Site, are near the deepest portion of the channel where it is interpreted that almost all of the Ringold Formation has been eroded. At this location, the water table in the channel is interpreted to be 52 meters above the basalt, which forms the floor of the channel. The surface of basalt rises to the north where the water table is approximately 27 meters above the basalt at the northeast corner of the site near borehole 299-E24-21.

Hanford formation. The Hanford formation is as much as 116 meters thick in and around the IDF site. The Hanford formation thickens in the erosional channel cut into the Ringold Formation and thins to the southwest along the margin of the channel.

At the IDF site, the Hanford formation consists mainly of sand dominated facies with lesser amounts of silt dominated and gravel dominated facies. The Hanford formation has been described as poorly sorted pebble to boulder gravel and fine- to coarse-grained sand, with lesser amounts of interstitial and interbedded silt and clay. In previous studies of the site (WHC-MR-0391), the Hanford formation was described as consisting of three units: an upper and lower gravel facies and a sand facies between the two gravelly units. The upper gravel dominated facies appears to be thin or absent in the immediate area of the IDF site (PNNL-12257, PNNL-13652, and PNNL-14029).

The lowermost part of the Hanford formation encountered in boreholes at the IDF site consists of the gravel-dominated facies. Drill core and cuttings from boreholes 299-E17-21, 299-E17-22, 299-E17-23, 299-E17-25, and 299-E24-21 indicate that the unit is a clast-supported pebble- to cobble gravel with minor amounts of sand in the matrix. The cobbles and pebbles almost are exclusively basalt with no cementation. This unit pinches out west of the IDF site and thickens to the east and northeast (Figure 5.4). The water table beneath the IDF site is located in the lower gravel unit. The lower gravel unit is interpreted to be Missoula flood gravels deposited in the erosional channel carved into the underlying Ringold Formation.

The upper portion of the Hanford formation consists of at least 73 meters of fine- to coarse-grained sand with minor amounts of silt and clay and some gravelly sands.

Holocene Deposits. Holocene, eolian deposits cover the southern part of the IDF site. Caliche coatings on the bottom of pebbles and cobbles in drill cores through this unit are typical of Holocene caliche development in the Columbia Basin. The southern part of the IDF site is capped by a stabilized sand dune. The eolian unit is composed of fine- to coarse-grained sands with abundant silt, as layers and as material mixed with the sand.

Clastic Dikes. A clastic dike was encountered in borehole C3828, adjacent to well 299-E17-25, at the IDF site. Clastic dikes also have been observed in excavations surrounding the site [e.g., US Ecology, the former Grout area, the 216-BC cribs, the Central Landfill, and the Environmental Restoration Disposal Facility (BHI-01103)]. In undisturbed areas, such as the IDF site, clastic dikes typically are not observed because these are covered by windblown sediments. The occurrence of a clastic dike in borehole C3828

suggests that these probably are present elsewhere in the subsurface at the disposal site. The IDF excavation will be geologically mapped to document the occurrence of any clastic dikes that may exist at the site.

5.3.2 Groundwater Hydrology

The unconfined aquifer under the IDF site occurs in the fluvial gravels of the Ringold Formation and flood deposits of the Hanford formation. The thickness of the aquifer ranges from about 70 meters at the southwest corner of the site to about 30 meters under the northeast corner of the IDF site. The Elephant Mountain Member of the Columbia River Basalt Group forms the base of the unconfined aquifer (Figure 5.4).

The unsaturated zone beneath the land surface at the IDF site is approximately 100 meters thick and consists of the Hanford formation. The water level in boreholes in and around the site indicates that the water table is in the lower gravel sequence of the Hanford formation and at an elevation of approximately 123 meters above sea level. The water table is nearly flat beneath the IDF site. Table 5.1 gives water level information from wells near the site. The locations of the wells are shown on Figure 5.1. The latest water table map shows less than about 0.1 meter of hydraulic head differential across the IDF site (Figure 5.5).

The Ringold Formation lower mud unit occurs within the aquifer at the southwest corner of the IDF site (299-E17-21) but is absent in the central and northern parts of the site (299-E24-7 and 299-E24-21). The lower mud unit is known to be a confining or partly confining layer at places under the Hanford Site (PNNL-12261) and this might be the case under the southwest corner of the IDF site. Groundwater samples were collected and analyzed from above and below the lower mud unit during drilling of well 299-E17-21. Chemical parameters (pH, electrical conductivity, and Eh) were different in the two samples suggesting that the lower mud is at least partly confining in the area. No contamination was found above or below the lower mud. An interpretation of the distribution and thickness of this stratum is shown in Figure 5.4. The surface of the lower mud unit is interpreted to dip gently to the southwest (PNNL-13652).

Hydrographs for selected wells near the IDF site are shown in Figure 5.6. Although the water table is extremely flat in the area of the IDF, hydrographs suggest that groundwater flow has had an easterly component throughout the 1990s and has not significantly changed due to cessation of discharges to the 216-B Pond system. Hydrographs for the older wells (299-E23-1, 299-E23-2, and 299-E24-7) show two maxima in the water level. These coincide with the operation of the PUREX Plant, which operated between 1956 and 1972 and between 1983 and 1988. All the hydrographs show a decline in the water table during recent years. The rate of decline is between 0.18 and 0.22 meter per year and will take between 10 and 30 years to stabilize. The reason for the decline is the cessation of effluent discharge to the 216-B Pond System, which is centered northeast of 200 East Area. Based on hindcast water table maps (BNWL-B-360), the water table is expected to decline another 2 to 7 meters before reaching pre-Hanford Site elevations. The cessations of effluent discharge also are responsible for changes in the direction of groundwater flow across much of the 200 East Area.

Groundwater flow beneath the IDF site recently was modeled to be southeasterly (PNNL-13400). This direction differs from the easterly direction predicted by the analysis of WHC-SD-WM-RPT-241 and other earlier reports. The southeasterly flow direction primarily is attributable to inclusion of the highly permeable Hanford formation sediments in the ancestral Columbia River/Missoula flood channel in the analysis. A southeasterly flow direction is reflected in the geographic distribution of the regional nitrate plume and in the distribution of other constituents under the south-central 200 East Area (PNNL-14187, 1 of 2, 2 of 2). As stated in PNNL-13404 (1 of 2, 2 of 2), the water table gradient is too low to be used for determining flow direction or flow rate at the PUREX Plant cribs immediately east of the IDF site.

Hydraulic conductivity directly beneath the IDF site was estimated from data collected during four slug tests at well 299-E17-21 and five slug tests of 299-E24-21. The interval tested at 299-E17-21 was the upper 7.8 m of the unconfined aquifer from 101.3 to 109.1 m depth. That portion of the aquifer is

Hanford formation gravel from 101.3 to 102.1 m depth and Ringold Formation unit E gravels from 102.1 to 109.1 m depth (PNNL-11957). The interval tested at well 299-E24-21 was entirely in the Hanford formation gravel sequence between 95.2 and 101.3 m depth. The best fit value to the data from 299-E17-21 indicated a hydraulic conductivity of about 68.6 meters per day (PNNL-11957) and from 299-E24-21 suggested a hydraulic conductivity of 75 meters per day (PNNL-13652).

5.4 CONTAMINANT PLUME DESCRIPTION

Although no groundwater monitoring has been done for the IDF, groundwater monitoring has been done in support of RCRA permitting activities and in support of other activities in the area. The results of that monitoring show that a regional nitrate plume exists beneath the IDF site (PNNL-14187, 1 of 2, 2 of 2). In the south-central 200 East Area, the plume extends in a northwest - southeast direction along the axis of the Columbia River/Missoula flood channel eroded into the Ringold Formation sediments. The channel is filled with more transmissive Hanford formation sediments.

5.4.1 Groundwater Contamination

Nitrate, associated with past-practice activities in 200 East Area, is a general groundwater chemistry parameter and is not a contaminant of concern for the IDF. However, the distribution of existing nitrate in the groundwater gives an indication of the general groundwater flow direction and the influence that adjacent sites might have on the IDF.

High nitrate concentrations found near liquid waste disposal facilities located outside the IDF site that received effluent from the PUREX Plant are decreasing steadily with time. The highest nitrate concentration found in 2002 was 170,000 µg/L in well 299-E17-9 at the 216-A-36B crib and the crib is thought to be the source of the nitrate. The drinking water standard for nitrate is 45,000 µg/L (nitrate ion).

Nitrate in well 299-E24-18, just inside the east boundary of the IDF site, decreased from a high of 86,300 µg/L in 1990 to a low of 17,000 µg/L in 1993, reflecting the cessation of PUREX Plant operations in 1988. Since 1993, nitrate has increased to 48,300 µg/L in 2003 (Figure 5.7). The reason for the increase is not understood. One possibility is related to changing groundwater flow direction. During PUREX Plant operations, flow direction was probably to the northwest because of effluent discharges to the B Pond System and PUREX Plant cribs, and nitrate contamination might have spread to the northwest during that period. Subsequently, liquid discharges to the B Pond System and PUREX Plant cribs have ceased and the flow direction in the area of the IDF site apparently has returned to the southeast direction. With that change, higher levels of nitrate contaminated groundwater might be returning to the area from the northwest.

Except for an anomalous value of 82,600 µg/L in 1988, nitrate concentration in well 299-E24-7 was steady and ranged between 12,800 and 35,400 µg/L between 1985 and 1996 when the well was last sampled (Figure 5.7). The last two measured values from 1995 and 1996 were 26,000 µg/L. Farther southwest, nitrate detected in 1998 in well 299-E17-21 in Ringold unit E was 23,600 µg/L.

5.4.2 Vadose Zone Contamination

Very little characterization and monitoring of the soil have been done at the IDF site because no major construction or waste disposal activities have occurred in this part of the Hanford Site. Implementation of the *Integrated Disposal Facility Preoperational Monitoring Plan* (RPP-6877) has begun and characterization activities will occur during the next few years. The *Integrated Disposal Facility Preoperational Monitoring Plan* (RPP-6877) has a strong emphasis on vadose zone characterization and deferred groundwater monitoring to this groundwater monitoring plan. Vadose zone information resulting from preoperational monitoring will be included, if applicable, in updates to this groundwater monitoring plan.

The *Integrated Disposal Facility Preoperational Monitoring Plan* (RPP-6877) identified three areas near the IDF site that might have had an influence on the vadose zone beneath the site. These are the 218-E-1 Burial Ground and an unplanned release associated with the burial ground; the coal ash pile in the

northwest part of the site; and a transfer line along the northern part of the west boundary of the IDF site (RPP-6877). Work was outlined in the *Integrated Disposal Facility Preoperational Monitoring Plan* to determine whether these three areas had introduced contamination to the site. Appropriate results from preoperational monitoring will be incorporated into this groundwater monitoring plan as results become available and as revisions are needed.

In addition to these facilities, the 216-A-38-1, 216-A-45, and 216-A-10 cribs and the 299-E24-111 injection well are located east of the IDF site. The 216-A-38-1 crib never was used (DOE/RL-92-04). The 299-E24-111 injection well never received any waste (DOE/RL-92-04). The 216-A-45 and the 216-A 10 cribs both received large quantities of liquid waste (DOE/RL-92-04). Because these latter two facilities are more than 200 meters from the IDF site, it is unlikely these facilities have affected the soil beneath the IDF site. Data from the vadose zone in IDF wells drilled along the east side of the site support this.

5.5 DETECTION MONITORING PROGRAM

Because the IDF has not been constructed, no contaminants have been released to the ground or to the groundwater.

5.5.1 Indicator Parameters, Waste Constituents, Reaction Products to be Monitored

5.5.1.1 Regulated Constituents

The regulated constituents for this groundwater monitoring plan are the constituents identified on the IDF Part A Form.

5.5.1.2 Monitoring Parameters

The parameters to be routinely monitored are listed in Table 5.2. These parameters include the indicator parameters and supplemental parameters.

The indicator parameters will be used to monitor for hazardous constituents reaching the groundwater as a result of IDF operations. Only the indicator parameters are subject to the statistical methods described in Section 5.5.4.7. Total organic carbon and total organic halides are indicator parameters selected to monitor impacts of RCRA regulated organic constituents on the groundwater quality. Specific conductance is selected as an indicator parameter to monitor impacts of metals and anions on groundwater quality. pH is a general indicator of groundwater quality. Specific conductance and pH are measured in the field at the time of sampling. Chromium is included as an indicator parameter because hexavalent chromium is one of the more mobile of the regulated metals to be disposed of at the IDF and should be one of the first constituents to enter groundwater if the regulated facility impacts groundwater.

Analyses of alkalinity, anions, and metals are to provide supplemental data on general groundwater chemistry beneath the IDF. This information aids data interpretation and quality control. Supplemental parameters will not be used in statistical evaluations. Turbidity is analyzed at the well just before sampling and provides an indication of the groundwater condition at the time of sampling.

For the first year of monitoring, all parameters listed in Table 5.2 will be monitored twice each quarter to determine background concentrations. After the first year, indicator and supplemental parameters will be monitored semi-annually. In addition, field measurements of temperature and turbidity will be made at each sampling event.

During the first sampling event at each well for the first year of monitoring, samples will be collected for analysis of the indicator parameters, the supplemental parameters, and the Appendix IX constituents (40 CFR 264) included in IDF Part A Form. After the first sampling event, samples will be collected for analysis of indicator parameters and supplemental parameters only.

After the first year of sampling, if an indicator parameter suggests there is an impact to groundwater, additional samples will be collected to verify the initial results. If a statistically significant increase in any indicator parameter is confirmed, analyses will be made for the regulated parameters in IDF Part A Form.

Monitoring for baseline conditions was completed for the indicator parameters in April 2006 and for the complete Appendix IX list in January 2007. Semi-annual monitoring has continued since that time with the collection of four independent samples each semiannual period. During the Pre-Active life, sampling will continue at the IDF with the collection of one sample each year to maintain the baseline. When the IDF becomes operational, sampling will revert to four independent samples collected each semiannual period.

5.5.1.3 Dangerous Waste Characterization

This section describes the waste to be disposed in the IDF and gives background information on how the constituents of concern (regulated constituents) and indicator parameters were selected.

5.5.1.3.1 Volume of the Waste Package

The IDF will be a single, expandable disposal facility constructed to RCRA Subtitle C standards, half of which is for disposal of mixed waste the other half will be for disposal of low-level waste. Initial capacity for mixed waste disposal is 82,000 cubic meters of waste with an ultimate capacity of up to 450,000 cubic meters of waste. Disposal capacity beyond the initial 82,000 cubic meters will require a modification to the Part B Permit. The mixed waste types to be disposed in the IDF include vitrified LAW from the RPP-WTP and DBVS. Additionally, mixed waste generated by IDF operations will be disposed of in IDF.

The vitrified LAW will be mostly silicate glass monoliths. The RPP-WTP packages nominally measure approximately 1.22 m diameter by 2.3 m high and the DBVS package nominally measure approximately 2.4 m wide by 3.1 m high by 7.3 m long. Vitrified LAW will be remote handled.

If other forms of immobilized LAW are considered in the future, this monitoring plan will be amended.

Mixed waste generated through waste operations at IDF will be packaged based on the size of the waste, with the most common container being galvanized or aluminized 208 liter containers.

5.5.1.3.2 Composition of the Waste Packages

HNF-4921 provides detailed estimates for the inventory of hazardous chemicals in the vitrified LAW feed and in the vitrified LAW package. The composition of the vitrified LAW package was estimated in HNF-4921 based on

1) the Tank Waste Retrieval System Characterization Program tank-by-tank Best Basis Inventories,
2) the latest U.S. Department of Energy, Office of River Protection (DOE/ORP) guidance,
3) the requirements for waste retrieval and vitrification,
4) available information from waste treatment plant contractors, and (5) proposed operating scenarios for retrieval of waste from DSTs and SSTs.

5.5.1.4 Behavior of Constituents

Almost all of the regulated constituents for the IDF show some degree of retardation in the vadose zone and in the saturated zone. Table 5.3 indicates the range of expected behaviors in the subsurface at the IDF for selected regulated constituents. The constituents in Table 5.3 were selected by comparing the expected constituents in the vitrified LAW package (from HNF-4921) and the historical inventories of the Hanford Site low-level burial grounds (from WHC-MR-0008 and WHC-SD-EN-AP-015) to 40 CFR 264, Appendix IX (see IDF Part A Form). The mobilities and solubilities in Table 5.3 give an estimated range for the properties of the constituents of concern.

5.5.1.5 Detectability

The detection limits in groundwater for each RCRA regulated constituent and the indicator parameters are given in Table 5.4.

5.5.2 Groundwater Monitoring Program

The following sections provide a description of wells, equipment decontamination, representative samples, and monitoring wells that are not upgradient.

5.5.2.1 Description of Wells

The groundwater monitoring well network for the IDF ultimately will have eight wells: three hydraulically upgradient of the facility and five hydraulically downgradient. The downgradient wells will be placed to sample groundwater passing the point of compliance. The point of compliance at the IDF site is a plane connecting the groundwater monitoring wells along the southern and eastern sides of the site in accordance with WAC 173-303-645(6), which states "The point of compliance is a vertical surface located at the hydraulically downgradient limit of the waste management area that extends down into the uppermost aquifer underlying the regulated unit". The monitoring network will consist of existing and new, downgradient wells to complete the monitoring network. All wells will be WAC 173-160 compliant.

Three upgradient wells will be used for the IDF monitoring network. Two of these wells (299-E18-1 and 299-E24-21) are existing wells. Upgradient well 299-E24-21 was installed in March 2001 for characterization of the IDF site. The well, located at the northeast corner of the site (Figure 5.8), was constructed to RCRA standards as per WAC 173-160. Well 299-E18-1 was installed in 1988 as part of the 2101-M RCRA monitoring network. The well currently has 2 to 3 meters of water above the bottom of the screened interval.

The third upgradient well will be a new well located at the northwest corner of the IDF (Figure 5.8). The well will be constructed to RCRA standard as per WAC 173-160 and screened at the water table.

Three of the downgradient wells are existing wells (299-E17-22, 299-E17-23, and 299-E17-25) that were installed as WAC 173-160 compliant wells in 2002. Their location is shown in Figure 5.8. The remaining two downgradient wells will be installed in a sequence coordinated with the IDF operations.

Three phases of trench construction are assumed for the purposes of this monitoring plan. Excavation for the first phase is scheduled for September 2004 and a new phase is planned for every ten subsequent years. Changes in the planned operations of the IDF will be reflected in changes to this groundwater monitoring plan as needed.

The first new downgradient well will be installed along the eastern side of the facility (Figure 5.8) at least one year before the IDF receives waste. The second new downgradient well will be installed along the southern boundary of the Site at least one year before the third phase of waste disposal becomes operational. Both wells will be installed such that at least one year of background data can be obtained prior to the associated operational phase becoming active. Figure 5.8 shows the sequence for both groundwater well construction and waste disposal. The locations of all existing and new wells in the IDF monitoring network are noted on the figure.

The placement of the wells for the IDF monitoring network was based on professional judgment. The efficiency of the resulting groundwater monitoring network was evaluated using a simple two dimensional, horizontal transport model called the monitoring efficiency model (MEMO) (Wilson et al. 1992). The model estimates the efficiency of a monitoring network at the point of compliance. The model simulates a contaminant plume originating from a series of grid points within the disposal facility using the Domenico-Robbins method (Domenico and Robbins, 1985). The model calculates both advective flow and dispersive flow in two dimensions and determines whether the resulting plume will be detected by a monitoring well before the plume travels some selected distance beyond the disposal facility boundary. The selected distance is termed the buffer zone. (A longitudinal dispersivity of 95 meters and horizontal dispersivity of 9.5 meters were used to evaluate the monitoring network in Figure 5.8.) Outputs from the model are the monitoring efficiency and a map of the disposal facility showing areas where leaks would not be detected under the given site-specific parameters provided as input to the

model. Monitoring efficiency is defined as the ratio of the area within a disposal facility from which a release likely would be detected to the total area of the disposal facility, expressed as a percentage.

The monitoring efficiency calculated by the MEMO model for the proposed monitoring network is 100% for phase I, 98% for phase II, and 99% for phase III (Figure 5.8).

All wells for the IDF site will be constructed to meet WAC 173-160 requirements. The wells will be protected at the surface with a concrete pad, protective posts, a protective outer casing, and locking cap. The casing and screen will be stainless steel, an appropriate filter pack for the screen slot size will be used, and an annular seal of bentonite and cement will be emplaced. All wells will be screened at the water table with 10.6 meter long screens, which will accommodate the greatest possible future decrease in water level. The wells will be developed and dedicated sampling pumps will be installed.

New wells will be surveyed with a down hole gyroscope at the time of construction to determine any deviation from vertical so that corrections can be made to subsequent water level measurements. Gyroscope surveys will also be conducted on existing wells in the network prior to IDF operations.

5.5.2.2 Equipment Decontamination

Drilling equipment will be decontaminated using high temperature and pressure [82°C (180°F) and greater than 70.3 kg/cm^2 (1,000 psi)] washing with an approved cleaning solution. The equipment will be rinsed with clean water. The procedure is specified in controlled manuals.

Equipment for collecting soil samples during drilling for later chemical analysis and for measuring the water table will be decontaminated according to established methods. The methods call for washing equipment with phosphate free detergent, rinsing three times with reverse osmosis/de-ionized water, rinsing once with 1M or 10% nitric acid (glass or stainless steel equipment only), rinsing three more times with reverse osmosis/de-ionized water, and a final rinse with chromatograph grade hexane. Equipment will be dried for 50 minutes at 100°C (212°F). After drying, equipment will be wrapped in unused aluminum foil and sealed with tape.

No decontamination of groundwater sampling equipment will be necessary because each well will have a dedicated pump.

5.5.2.3 Representative Samples

No groundwater chemistry data specific to the IDF site are available. Sample representativeness will be addressed after collection of the first year of background data.

5.5.2.4 Locations of Background Groundwater Monitoring Wells that are not Upgradient

All background groundwater monitoring wells at the IDF are located upgradient.

5.5.3 Background Values

Groundwater background (baseline) has not been established for the IDF site. Background data will be determined before construction of the site using the wells described previously (Section 5.5.2.1) for the use of upgradient vs. downgradient comparisons (Section 5.5.4.7).

5.5.3.1 Plan for Establishing Groundwater Quality Data

Well location, sampling frequency, sampling quantity, and background values are discussed in the following sections.

5.5.3.1.1 Well Locations

Groundwater monitoring wells in the IDF monitoring network were described in Section 5.5.2.1 and their locations are shown on Figure 5.8.

5.5.3.1.2 Sampling Frequency

Eight background samples will be collected during the first year of monitoring from phase I wells. Two samples will be collected quarterly for one year. For the new well needed for phase III operations, two samples will be collected quarterly for one year before phase III is operational. For all wells, two independent samples will be collected each quarter, one per month for 2 consecutive months followed by a month of non-sampling. This sequence will be repeated each quarter during the first year of monitoring. Section 5.5.3.1.3 provides frequency logic.

5.5.3.1.3 Sampling Quantites

The performance of the statistical method proposed for the IDF is evaluated by the following two goals:

- To have adequate statistical power to detect real contamination when contamination occurs
- To keep the network wide Type I error (across all constituents and wells being tested) at an acceptably low level (approximately 5%). [Note that the Type I error in the detection monitoring stage equates to the false positive rate, that is, the probability that the test will indicate contamination has occurred although no contamination has truly occurred.]

The statistical power and the network-side false positive rate of a test depend on several factors, including the background sample size, the type of proposed test, and the number of comparisons. All other factors being equal, the larger the sample size is (i.e., the number of background samples), the greater the statistical power is. Therefore, as recommended in EPA/530-R-93-003, at least eight independent samples will be collected from each well for background purposes. This is a sufficient number of samples to establish a reliable background (EPA/530-R-93-003) and meets the regulations in WAC 173-303-645(9)(d).

5.5.3.1.4 Background Values

The default method of analysis of variance (ANOVA) will be used to detect any impact on groundwater quality at the IDF where the mean of the measurements from compliance (downgradient) wells is compared to the mean of the distribution of background data from the upgradient wells. The details of the method are described in Section 5.5.4.7.1.

5.5.4 Sampling, Analysis and Statistical Procedures

Sample collection, sample preservation and transfer/shipment, analytical procedures, chain of custody and additional requirements for compliance point monitoring are discussed in the following sections.

5.5.4.1 Sample Collection

Groundwater sampling procedures, sample collection documentation, sample preservation and transfer/shipment, and chain-of-custody requirements are described in subcontractor operating procedures/manuals and in a quality assurance project plan for the Hanford Groundwater Performance Assessment Project. Quality requirements for sampling activities, including requirements for procedures, containers, transport, storage, chain of custody, and records requirements, are specified in a statement of work (SOW) to subcontractors. To ensure that samples of known quality are obtained, the subcontractor will be required to use contractor controlled procedures based on standard methods for groundwater sampling whenever possible. The procedures will be reviewed for technical quality and consistency. In addition, periodic assessments of sample collection activities will be performed to ensure further that procedures are followed to maintain sample quality and integrity. The following is a brief description of the sampling requirements.

Samples generally will be collected after three casing volumes of groundwater are withdrawn or after the field parameters pH, temperature, and specific conductance have stabilized. Field parameters are measured in a flow through chamber. Turbidity should be equal to or below 5 NTU (nephelometric turbidity units) before sample collection if possible. Sample preservatives will be added to the collection bottles in the laboratory before their use in the field. Samples to be analyzed for metals will be filtered in

the field to ensure results represent dissolved metals and do not include particulates (40 CFR 136.3). Duplicates, trip blanks, and field equipment blanks will be collected as part of the general quality control program.

Water level measurements will be made each time a well is sampled. Procedures developed in accordance with the techniques described in American Society for Testing and Materials (ASTM 1988), Garber and Koopman (1968), and U. S. Geological Survey (1977) will be followed to measure water levels. Water levels will be measured primarily with laminated steel electrical sounding tapes, although graduated steel tapes are used occasionally.

5.5.4.2 Sample Preservation and Shipment

Sample preservation will be done in accordance with existing procedures. A chemical preservative label will be affixed to the sample container listing the specific preservative. The brand name, lot number, concentration, and date opened of the preservatives will be recorded. A calibrated dispenser or pipette will be used to dispense preservatives. Appropriate measures will be taken to eliminate any potential for cross contamination.

Sample packaging and transfer/shipping will be done in accordance with subcontract procedures. Samples will be labeled and sealed with evidence tape, wrapped with bubble wrap, and placed in a Department of Transportation approved container with coolant (if required). Hazardous samples will have packaging parameters determined by associated hazards. A chain of custody will accompany all samples.

5.5.4.3 Analytical Procedures

The methods for analysis of chemical constituents in groundwater will conform to *Test Methods for Evaluating Solid Wastes: Physical/Chemical Methods, 3rd Ed.* (SW-846); *Methods for Chemical Analysis of Water and Wastes* (EPA-600/4-79-020) or other EPA methods; and the *Annual Book of ASTM Standards* (American Society for Testing and Materials, 1986). The methods used to obtain routine data results are presented in Table 5.4.

5.5.4.3.1 Data Storage and Retrieval

All contract analytical laboratory results will be submitted by the laboratory to be loaded into the Hanford Environmental Information System (HEIS) database. Most data are received from the laboratory in electronic form, and will be loaded electronically. Parameters measured in the field will be entered into HEIS either manually or through electronic transfer. Hard copy data reports are received for records storage. Data from the HEIS database will be retrieved for data validation, data reduction, and trend analysis. Copies of supporting analytical data will be sent yearly to Pacific Northwest National Laboratory (PNNL) for storage.

5.5.4.3.2 Data Verification and Validation

Verification of analytical data provided by the subcontracted laboratory will be performed in accordance with established procedure. This procedure includes checks for: (1) completeness of hardcopy deliverable, (2) condition of samples on receipt by the laboratory, (3) problems that arose during the analysis of the samples, and (4) correct reporting of results. The procedure also describes the actions to be taken if data are incomplete or deficient.

Verification and validation of groundwater chemistry data will be performed according to established procedures. Data will be reviewed quarterly to assure the data are complete and representative. The review will include evaluation of quality control data (e.g., field blanks, duplicates, and laboratory blanks) and a technical review by a project scientist familiar with the hydrogeology of the site. The technical review might include comparison of recent data to historical trends and comparison of related constituents. Suspect data will be investigated through the data review process in accordance with established procedures and will be flagged in the database.

5.5.4.3.3 Reporting

Groundwater chemistry and water level data will be reviewed after each sampling event and will be available in the HEIS database. The results of the statistical evaluation and associated information will be submitted to Ecology quarterly in Hanford Site groundwater monitoring reports.

If statistically, significant evidence of contamination is determined (after waste has been introduced to the facility and after the confirmation re-sampling evaluation process) for one or more of the indicator parameters at any monitoring well at the compliance point, and if the owner or operator decides not to make a false positive claim, the following will be performed.

- Notify Ecology in writing within 7 days of the finding indicating which chemical parameters or dangerous waste constituents have shown statistically significant evidence of contamination.
- Determine whether dangerous constituents are present and, if so, in what concentration.
- The owner or operator might re-sample within 1 month and repeat the analysis for those compounds detected in the above (i.e., second bullet). The resample data will be compared with the trigger value.
- Submit an application for a permit modification, if necessary, to establish a compliance monitoring program to Ecology in 90 days or within the time agreed to in writing by Ecology.

The dangerous constituents detected, either in the initial analysis or in the second confirmation analysis, will form the basis for compliance monitoring.

In case of a false positive claim [as allowed by WAC 173-303-645(9)(g)(vi)], the following will apply.

- Notify Ecology in writing within 7 days of the finding (i.e., exceedance) and indicate that a false positive claim will be made.
- Submit a report to Ecology within 90 days or within the time agreed to in writing by Ecology. This report should demonstrate that a source other than the regulated unit caused the contamination or that the contamination resulted from an error in sampling, analysis, evaluation, or natural variation in groundwater chemistry.
- Submit an application for a permit modification, if necessary, to make any appropriate changes to the detection monitoring program within 90 days or within the time agreed to in writing by Ecology.
- Continue to monitor in accordance with the detection monitoring program.
- Submit an application for a permit modification, if the detection monitoring program is determined to no longer satisfy the requirements [of WAC 173-303-645(9)], to make any appropriate changes to the program within 90 days or within the time agreed to in writing by Ecology.

5.5.4.4 Chain of Custody

The procedures used for chain-of-custody control of samples are documented in existing manuals. The procedure requires that each transfer of custody shall be documented by the signatures of the custodian relinquishing the samples and the custodian receiving the samples, as well as the time and date of transfer. The laboratory custodian will sign and date the chain-of-custody form upon receipt of the samples at the laboratory.

5.5.4.5 Additional Requirements for Compliance Point Monitoring

This section describes sampling frequency and determination of groundwater quality for the samples from the groundwater monitoring network. Compliance data will be compared to baseline data collected from the upgradient wells and a determination of impacts to groundwater will be made using the proposed ANOVA method (explained in Section 5.5.4.7.1).

5.5.4.5.1 Sampling Frequency

Under final status regulations, the default sampling procedure states that a sequence of at least four samples from each well (background and compliance wells) must be collected at least semiannually during detection monitoring at an interval that ensures, to the greatest extent technically feasible, that an independent sample is obtained [40 CFR 264.97(g)(1) and (2), WAC 173-303-645(8)(g)(i) and (ii), and (9)(d)].

The default sampling procedures are adopted for the IDF Active life as follows: four independent samples from each groundwater monitoring well will be sampled for the indicator parameters (Table 5.2) semiannually during the active life of the regulated unit (including the closure period), one per month for four consecutive months followed by two months of non-sampling. The mean of the measurements from the downgradient wells will be compared semiannually to the mean of the distribution of the background data using ANOVA.

Semi-annual monitoring has been accomplished at the IDF since January 2007 with the collection of four independent samples each semiannual period. During the Pre-Active life, sampling will continue at the IDF with the collection of one sample each year to maintain the baseline. During Active life, sampling will revert to four independent samples collected each semiannual period described above.

5.5.4.5.2 Compliance Point Groundwater Quality Values

The groundwater quality data collected from the groundwater monitoring wells will be compared to the mean of the background data from upgradient wells for each constituent by ANOVA. If the mean is calculated from transformed baseline data (logarithmic transformation or nonparametric approach), then the monitoring data will be transformed accordingly; otherwise, the original monitoring data will be used in the comparisons.

During detection monitoring, data verification will be applied in case of an initial exceedance. For ANOVA test, if the test of hypothesis of equal means for all wells fails, *post hoc* comparisons are needed to determine which compliance well(s) is (are) contaminated. This will be done by comparing concentration differences (called contrasts in the ANOVA and multiple comparison framework) between each compliance well with the background wells (EPA/530-SW-89-026). If the contaminated compliance well(s) is (are) determined by *post hoc* comparisons, verification sampling will be implemented for the constituent(s) in question. Verification sampling is needed to determine if the exceedance is an artifact caused by an error in sampling, analysis, or statistical evaluation or an actual variation in groundwater chemistry. A collection of at least four measurements from the re-sampled compliance well(s) is required to perform ANOVA test on comparison with the mean of the background data (EPA/530-R-93-003). Adequate time should elapse to ensure statistical independence between the original measurements and the re-sample measurements, which is assured by the sampling frequency proposed in Section 5.5.4.5.1.

The existing nitrate plume beneath the IDF site is described in Section 5.4.1. Nitrate is not included in IDF Part A Form and, therefore, is not a constituent of concern for the IDF. Existing groundwater conditions will be monitored by the indicator parameters and supplemental constituents as described in Section 5.5.1. Specific conductance will respond to nitrate so that any changes in the nitrate concentration will be reflected by changes in the indicator parameter specific conductance.

Anion analysis is one of the supplemental constituents to be monitored at the IDF site. Anion analysis will determine the nitrate concentration. Therefore, through comparison of regression lines of specific conductance and nitrate (Zar, 1999) and/or contaminant source analysis (Gibbons, 1994), it can be determined whether any change in specific conductance is due to a change in nitrate. If a change in specific conductance is due to a change in nitrate, then that specific conductance change is not attributed to the IDF. If, however, a statistically significant change in specific conductance is not attributable to nitrate, verification sampling will occur as described above.

5.5.4.6 Annual Determination

Groundwater flow rate and flow direction at the IDF site will be determined annually for the uppermost aquifer. Flow rate will be determined by calculation using the groundwater gradient, and the Darcy flow equation, $v_h = K_h i_h / n_e$, where v_h is the horizontal groundwater velocity, K_h is the horizontal hydraulic conductivity, i_h is the horizontal hydraulic gradient, and n_e is the effective porosity. Effective porosities used at Hanford Site RCRA regulated units are on the order of 0.1 to 0.3 (PNNL-14187, 1 of 2, 2 of 2); effective porosity might be determined specifically for the IDF from hydrologic tests.

Hydraulic gradients will be determined from measurements of water levels.

5.5.4.7 Statistical Determination

This section describes the method of statistical evaluation and the statistical procedures to indicate whether dangerous waste or dangerous waste constituents from the IDF might have entered the groundwater in the uppermost aquifer. These evaluations will be made as soon as practicable after validation of the full data set from each sampling event.

The monitoring program periodically will re-evaluate the statistical tests being used. The methods described will be reviewed during and after background, data are collected to ensure the methods are the most appropriate, considering site conditions.

The goal of a RCRA final status detection-monitoring program [WAC 173-303-645(9)] is to monitor for indicator parameters that provide a reliable indication of the presence of dangerous constituents in groundwater in the uppermost aquifer beneath the site. This is accomplished by testing for statistically significant changes in concentrations of indicators in downgradient wells relative to baseline values. The default statistical method ANOVA is proposed for the detection monitoring program of the IDF. The proposed statistical method is consistent with EPA/530-SW-89-026, EPA/530-R-93-003, and WAC 173-303-645.

The number of tested constituents will be limited to the indicators to maintain a sufficiently low false-positive rate (EPA/530-R-93-003, page 62; Gibbons 1994, page 16). Verification sampling is an integral part of the statistical design to lower the overall false-positive rate and determine whether the difference between background and compliance-point data is an artifact caused by an error in sampling, analysis, or statistical evaluation (Section 5.5.4.5.2).

5.5.4.7.1 Statistical Procedure

In accordance with WAC 173-303-645(8)(h), acceptable statistical methodology includes analysis of variance (ANOVA), tolerance intervals, prediction intervals, control charts, test of proportions, or other statistical methods approved by Ecology. The type of monitoring, the nature of the data, the proportions of non-detects, and spatial and temporal variations are some of the important factors to be considered in the selection of appropriate statistical methods. The EPA default method ANOVA will be implemented for the IDF site to compare the differences of means of the measurements from upgradient and downgradient wells. The detailed discussions of the ANOVA test can be found in EPA/530-SW-89-026 and statistical textbooks (Gilbert, 1987; Casella and Berger, 1990; Davis, 2002), and can be executed using commercial statistical software such as SAS or SYSTAT. Under WAC 173-303-645(8)(i)(ii), the proposed statistical method must comply with the performance standard, that is, for a multiple comparisons procedure the Type I error level must be no less than 0.05, and maintained at the level of no less than 0.01 for individual well comparisons. By definition, Type I error is the false rejection rate of the null hypothesis (H_0) of the statistical test. In detection or compliance monitoring, the statistical test is defined as H_0: no release, i.e., the means of the distributions from upgradient and downgradient wells are the same, and the alternative (H_a) evidence of release, e.g., "clean until proven contaminated" (EPA/530-R-93-003). Therefore, the proposed statistical method must comply with the requirement of maintaining Type I error, which equates false positive rate in the stage of detection monitoring at approximate 5% level. As described in EPA/530-SW-89-026, ANOVA procedures have the advantages of combining multiple downgradient into a single statistical test, thus enabling the network-wide false

positive rate for any single constituent (not multiple constituents) to be kept at 5 percent, and also maintain reasonable power for detecting contamination.

The details of the ANOVA procedures are described as follows (EPA/530-SW-89-026):

- First, check the proportion of non-detects of the measurements from the upgradient and downgradient wells. When the proportion of non-detects is less than 15%, the non-detects will be reported as one-half the minimum detection limit or practical quantitation limit, and proceed with parametric ANOVA analysis. When the proportion of non-detects is greater than 15%, non-parametric ANOVA analysis will be used for comparing the means of downgradient and upgradient wells.

- Evaluate the distributions of the measurements from the upgradient and downgradient wells. The assumptions with parametric ANOVA test are the residuals are normally distributed with equal variance. The normality of the distribution the residuals can be checked using coefficient of variation, plotting the data on probability plot, and/or Shapiro-Wilk's test (EPA/530-SW-89-026; Gibbons, 1994). The assumption of normality usually can be met by log-transforming the data or by other Box-Cox transformations. When the assumptions of normality and lognormality cannot be justified, the non-parametric ANOVA method will be used for the IDF. Bartlett's test can be used in checking equality, or homogeneity, of variances.

- The parametric ANOVA procedures include:

  - Assume a monitoring network with k wells, and total number of observations N. First, compute well total, well mean, and well residuals (observations subtracted by well mean) for each well, and grand total and mean of all observations (all wells). The well residuals are used to check the assumption of normality.

  - Compute the sum of squares of difference between well means and the grand mean, SS_{wells} that is a measure of the variability between wells with (k-1) degrees of freedom.

  - Compute the total sum of squares of differences between all observations and the grand mean, SS_{total}, which is a measure of the variability in all observations with (N-1) degrees of freedom.

  - Compute the sum of squares of differences of observations within wells from the well means, SS_{error}, which is a measure of the variability within wells with (N-k) degrees of freedom calculated by the following subtraction:

    $$SS_{error} = SS_{total} - SS_{wells}$$

  - Test the hypothesis of equal means for all k wells by computing F value with the means squares of differences:

    $$F = MS_{wells} / MS_{error}$$

    where the means of squares are the sums of squares divided by the associated degrees of freedom, that is, $MS_{wells} = SS_{wells} / (k-1)$, and $MS_{error} = SS_{error} / (N-k)$. Compare the F value to the tabulated F statistics with (k-1) and (N-k) degress of freedom at the 5% significance level (EPA/530-SW 89-026, Appendix B, Table 2). If the calculated F value exceeds the tabulated F statistics, the null hypothesis of equal well means is rejected. Proceed with test of contrasts in the next step. Otherwise, the hypothesis of equal means is accepted that there is no significant difference between the concentrations at k wells (upgradient and downgradient wells), that is, no evidence of contamination.

  - If the hypothesis of equal well means is rejected, contrasts (concentration differences between a compliance well and background wells) will be tested for each compliance well to determine which compliance well(s) is (are) contaminated. Bonferroni t-statistics will be computed to

determine if the significant F value is due to difference between background and compliance wells. Assume that of the k wells, k_b are background (upgradient) wells, and k_c are compliance (downgradient) wells (i.e., $k_b + k_c = k$). Each of the k_c compliance wells is compared to the mean of the background wells as the following steps:

- Compute the mean m_b from the k_b background wells with a total of n_b samples.
- Compute the difference D_i between the mean from the ith compliance well and the mean from the background wells.
- Compute the standard error of the difference from the ith compliance well with n_i observations as:

  $$SE_i = [MS_{error}\ (1/n_b + 1/n_i)]^{1/2}$$

  where MS_{error} is computed previously as the measure of variability within wells.
- Obtain the t-statistics from Bonferroni's t-table (EPA/530-SW-89-026, Appendix B, Table 3) with a significance level of (α=0.05/k_c) but no less than 0.01 (for individual comparison) and (N-k) degrees of freedom. The critical value for the ith compliance well is defined as $C_i = SE_i \times t$.
- If the difference D_i exceeds the critical value C_i, conclude that the mean of the ith compliance well is significantly higher than the mean of the background wells. Otherwise, conclude that the well is not contaminated.

- The one-way non-parametric ANOVA tests the null hypothesis that the data from each well come from the same continuous distribution and hence have the same median. The procedures, called the Kruskal-Wallis test, include the following steps:
  - Assume the monitoring network as defined previously with a total of N observations from k wells (kb background wells and kc compliance wells). Rank all N observations from least (1) to greatest (N). Let the background wells be group 1, and denote the compliance wells as group 2 to (kc+1). (one group per compliance well).
  - Compute the sum (Ri) and the average (mi) of the ranks of the ni observations in the ith group.
  - Compute the Kruskal-Wallis statistics (H) as

$$H = \left[\frac{12}{N(N+1)}\sum_{i=1}^{kc+1}\frac{R_i^2}{n_i}\right] - 3(N+1)$$

- Compare the calculated H value to the tabulated chi-squared value with kc degrees of freedom (EPA/530-SW-89-026, Appendix B, Table 1). The null hypothesis of equal medians is rejected when the calculated H value exceeds the tabulated critical value.
  - When the null hypothesis of equal medians is rejected, compute the critical difference C_i for each compliance well to the background data (group 1 with n_b observations):

$$C_i = Z_{(0.05/kc)}\left[\frac{N(N+1)}{12}\times\left(\frac{1}{n_b}+\frac{1}{n_i}\right)\right]^{1/2}$$

Where $Z_{(0.05/kc)}$ is the upper $(0.05/k_c)$ percentile from the standard normal distribution (EPA/530-SW-89-026, Appendix B, Table 4). If there are more than five compliance wells ($k_c > 5$), use $Z_{0.01}$, the upper one-percentile from the standard normal distribution ($Z_{0.01}$=2.32) for individual comparison (WAC 173-303-645(8)(i)(ii)).

- Compute the difference ($D_i = m_i - m_1$) of average rank m_i (i=2 to k_c+1) for each compliance well to the background (m_1). Compare the difference D_i to the critical value C_i for each compliance well. If D_i exceeds C_i, conclude that the median of the ith compliance well is significantly higher than the background median.

- As monitoring continues, the background data will be updated periodically (e.g., every year or two) to incorporate the new data from upgradient wells. This updating process will continue for the life of the monitoring program. Prior to updating older background data with more recent results, a two-sample t-test will be run to compare the older concentration levels with the concentrations of the proposed update samples. If the t-test does not show a significant difference at the 5 percent significant level, proceed to re-estimate the baseline parameters by including the more recent data. If the t-test does show a significant difference, the newer data will not be included as background unless some specific factors can be, identified explaining why background levels at the IDF site have naturally changed (EPA/530-R93-003).

Formal testing for outliers will be done when an observation of the background data seems inconsistently high (by orders of magnitude) compared to the rest of the data set in order to avoid the artificial increase of the mean of the background data and a corresponding increase of the false negative rate. Statistical methods such as the Grubbs' method (Grubbs, 1969), the box-and-whisker plot (Ostle and Malone, 1988), EPA guidance (EPA/530-SW-89-026, p. 11-14) and/or American Society for Testing and Materials guidance (ASTM 1996) will be used for testing outliers. The outliers must be checked to determine if the measurements are in error and need to be corrected or excluded from calculating the background mean. If no specific error is found, the measurements must be retained in the data.

A statistically significant exceedance over background (baseline) levels only indicates that the new measurement in a particular monitoring well for a particular constituent is inconsistent with chance expectations based on the available sample of background (baseline) measurements. Any statistical result must be supported by other information to determine if a waste disposal facility has impacted groundwater (ASTM 1996).

5.5.4.7.2 Results

Sampling and analysis results are reviewed at least semiannually (i.e., after each sampling event) and are available in HEIS. The DOE will submit results of statistical evaluations to Ecology.

5.5.5 Compliance Monitoring Program

A compliance monitoring program that satisfies requirements set forth in WAC 173-303-645(10) will be established for the IDF if detection-level monitoring reveals statistically significant evidence of dangerous waste contamination from sources within the regulated unit. If compliance monitoring is required, DOE will submit a revised monitoring plan to Ecology specifying dangerous constituents to be monitored, sampling and analysis protocols, statistical evaluation methods, etc. In the compliance monitoring program, the dangerous constituents or parameters will be compared to concentration limits specified in the facility permit as discussed in WAC 173-303-645(5) during the compliance period.

The RCRA regulations [WAC 173-303-645(9)(g)] state that if a statistical exceedance occurs in a downgradient well, the entire network immediately must be resampled and analyzed for the constituents in Appendix IX of 40 CFR 264. This sampling would be conducted in parallel with a required permit modification. Appendix IX is an extensive list including a wide variety of volatile and semivolatile organic compounds and trace metals. It is prudent to narrow the analyte list to the specific exceedance event; e.g., if the exceeding contaminant is total organic halides, the project would analyze for the

halogenated hydrocarbons most likely to be present in the area. Results of the resampling will form the basis for returning to detection monitoring or designing a compliance monitoring program.

5.5.6 Corrective Action Program

If, at a point of compliance (a well), dangerous constituents of concern are measured in the groundwater at concentrations that exceed the applicable groundwater concentration limit, Ecology must be notified in 7 days, and an application to modify the permit to include a corrective action plan must be sent to Ecology within 90 days or within the time agreed to by Ecology. A description of the groundwater monitoring plan, including all additional corrective actions that are appropriate for a corrective action program will be prepared and submitted to Ecology when the need for corrective action first is identified.

Figure 5.1. Location of the IDF and Nearby Boreholes

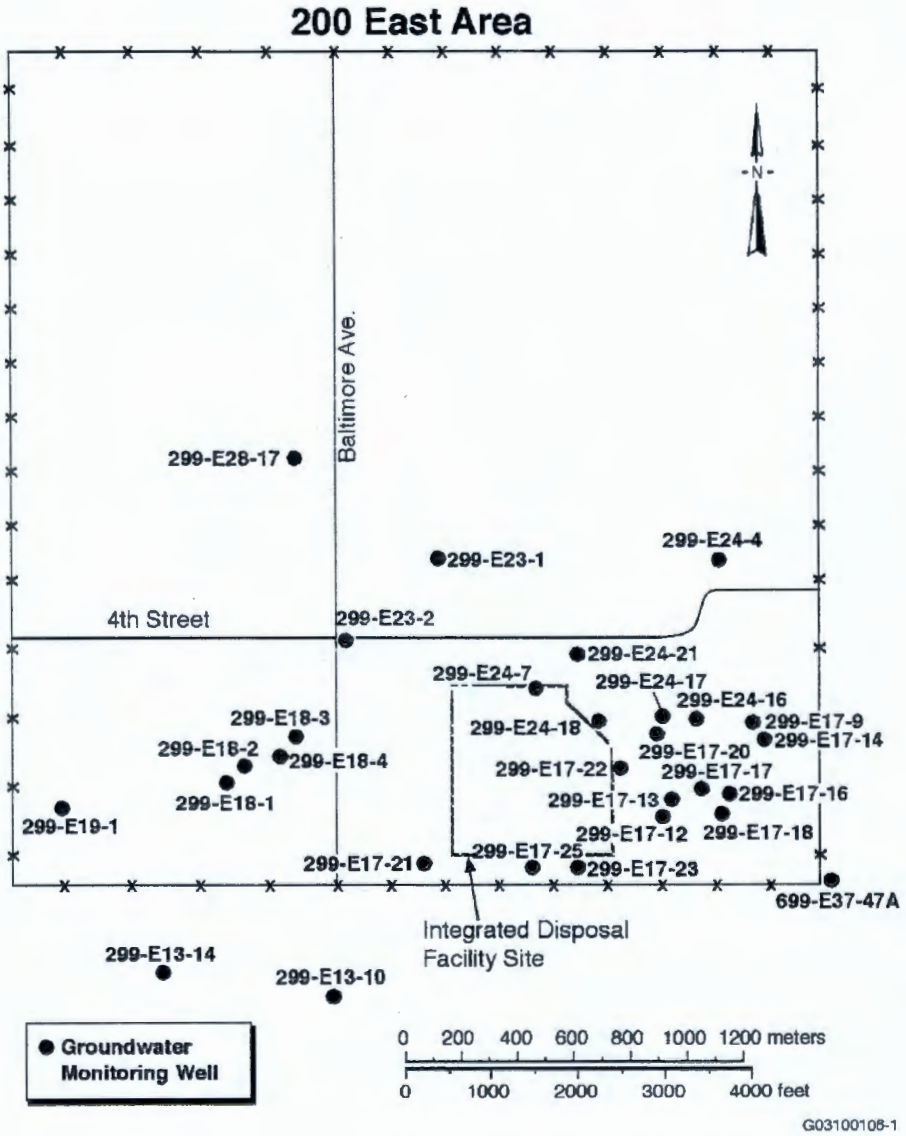

Figure 5.2. Geologic Map of the 200 East and 200 West Areas and Vicinity

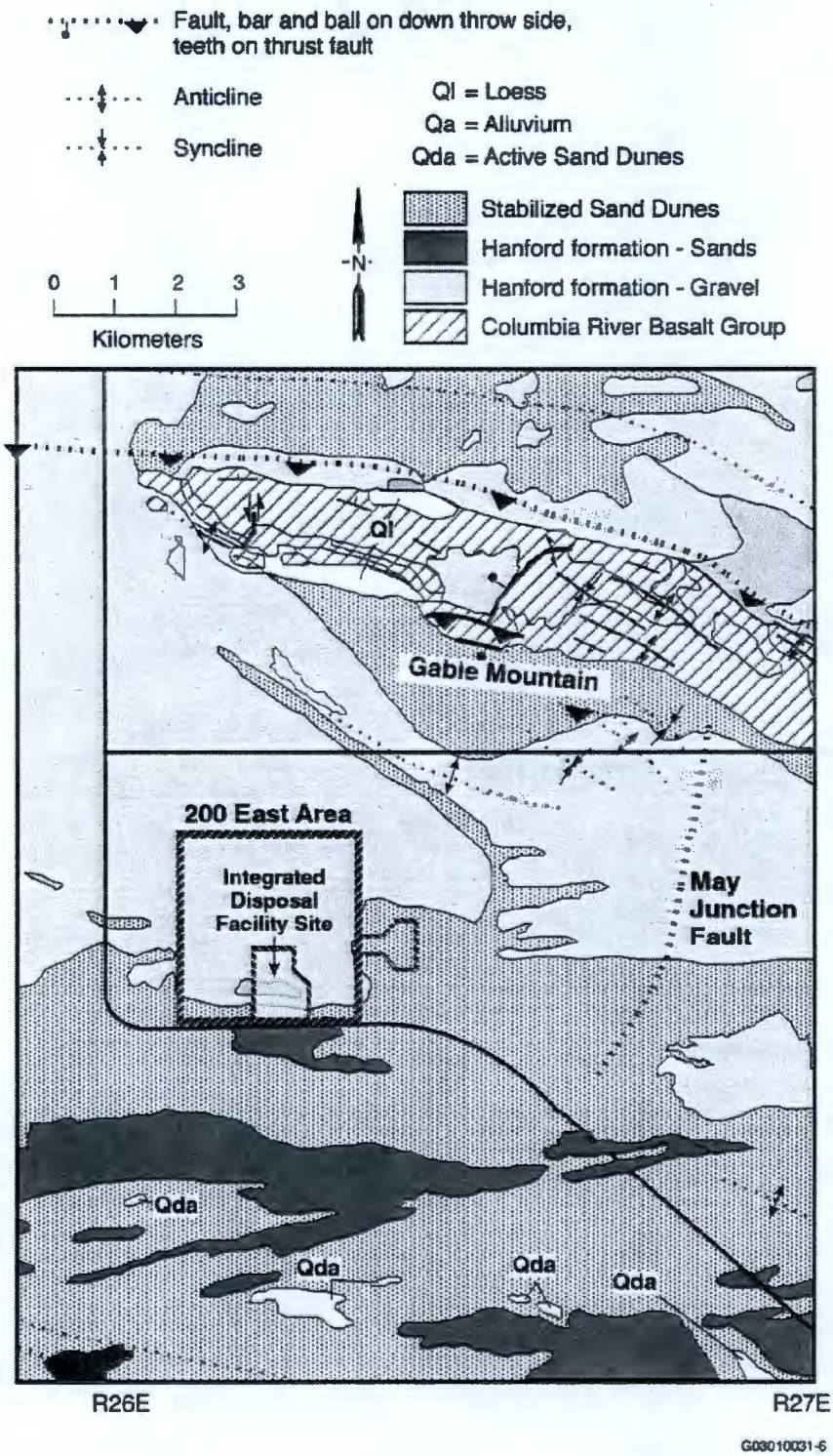

Figure 5.3. Stratigraphy of the Hanford Site

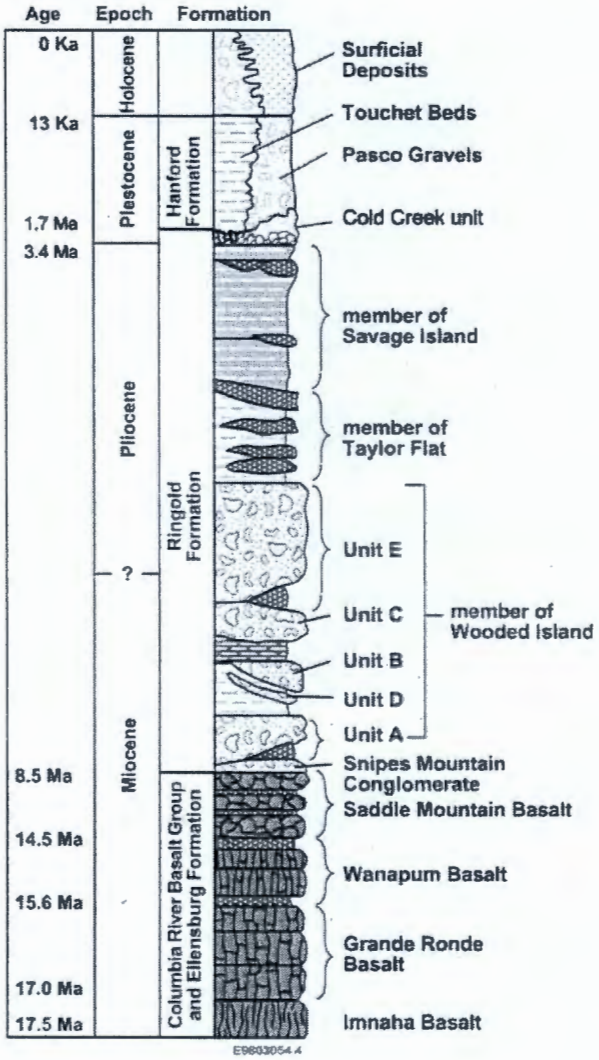

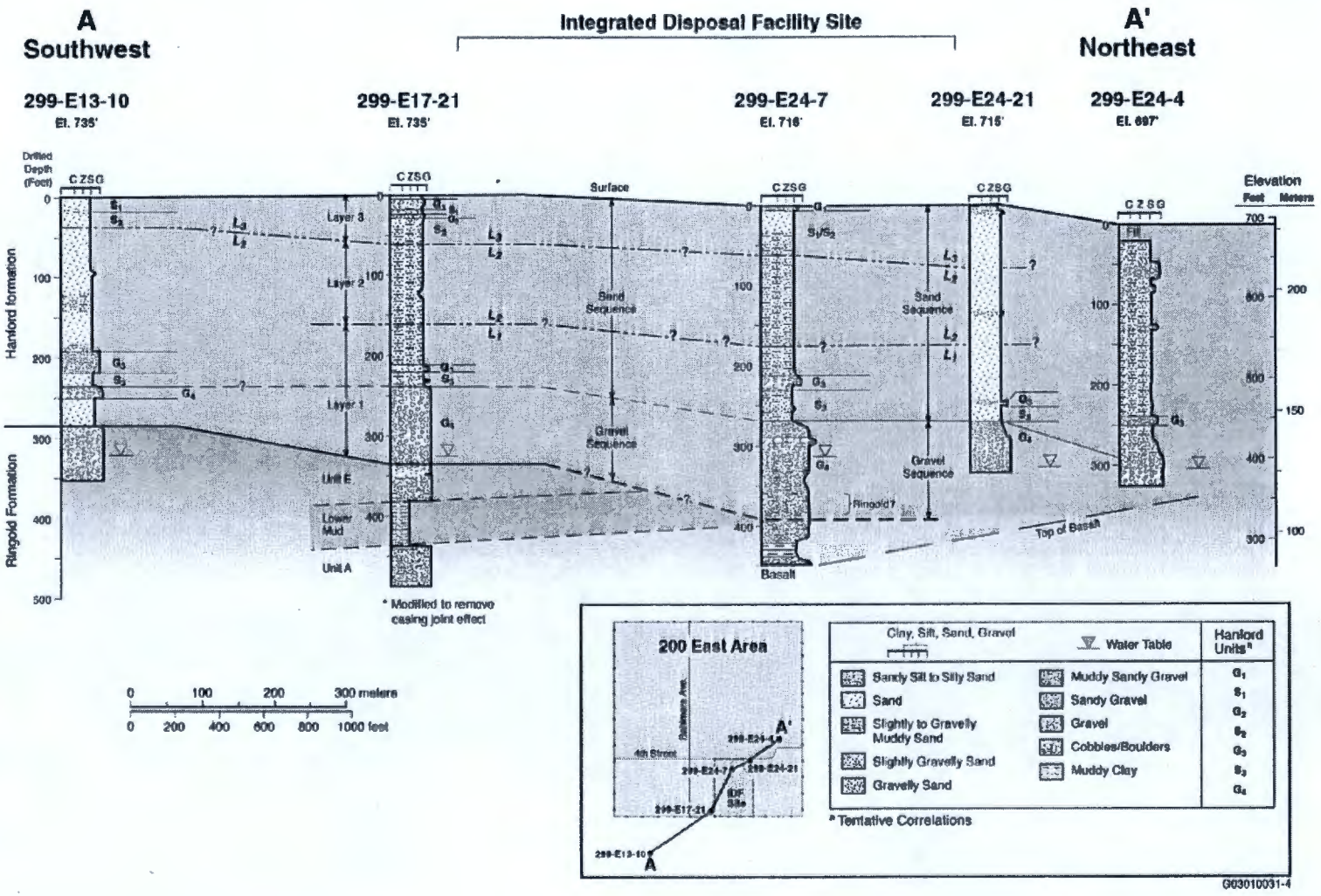

Figure 5.4. Cross-Section through the IDF Site

Figure 5.5. Water Table Map for the Hanford Site 200 East Area

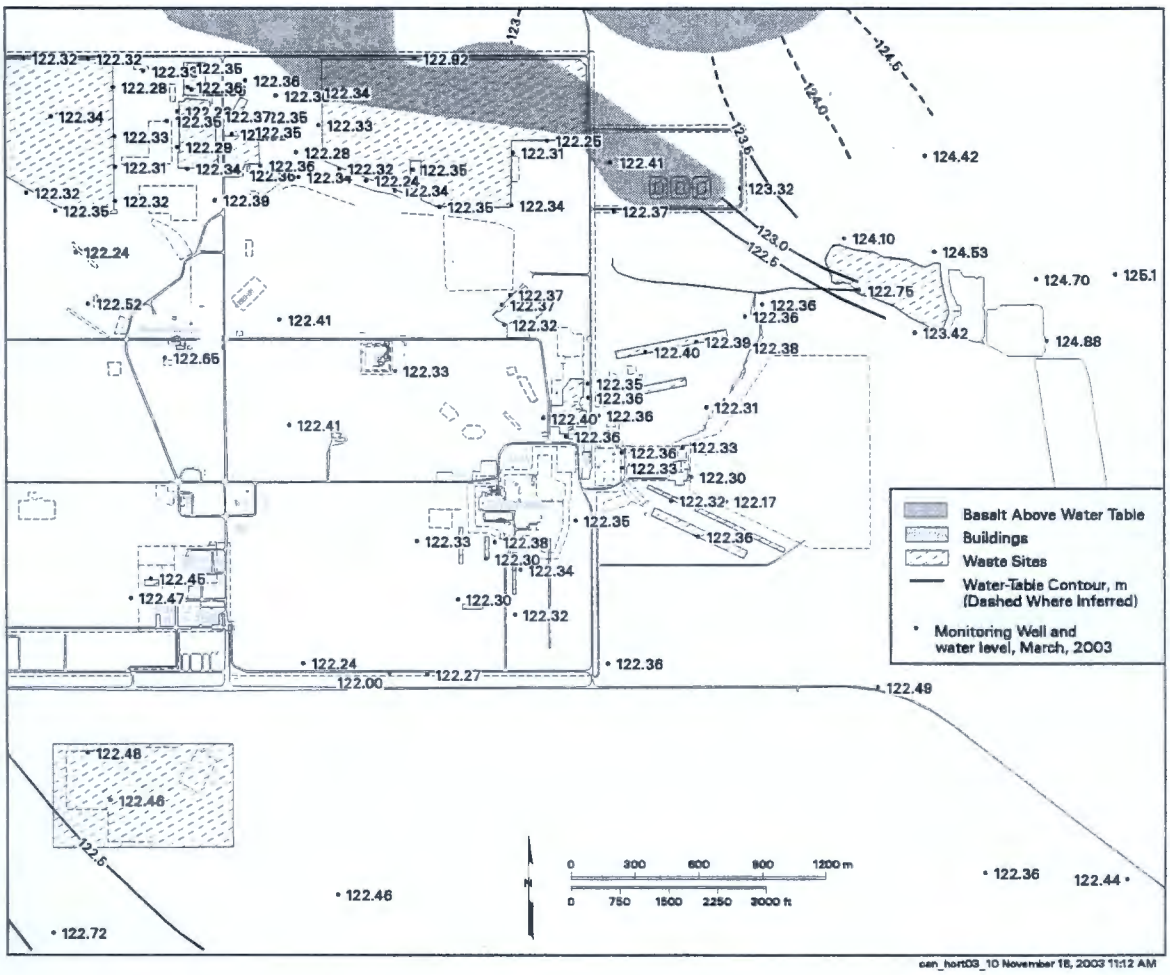
Basalt Above Water Table
Buildings
Waste Sites
Water-Table Contour, m (Dashed Where Inferred)
Monitoring Well and water level, March, 2003
0 300 600 900 1200 m
0 750 1500 2250 3000 ft
can_hort03_10 November 18, 2003 11:12 AM

Figure 5.6. Hydrographs for Wells Near the IDF Site

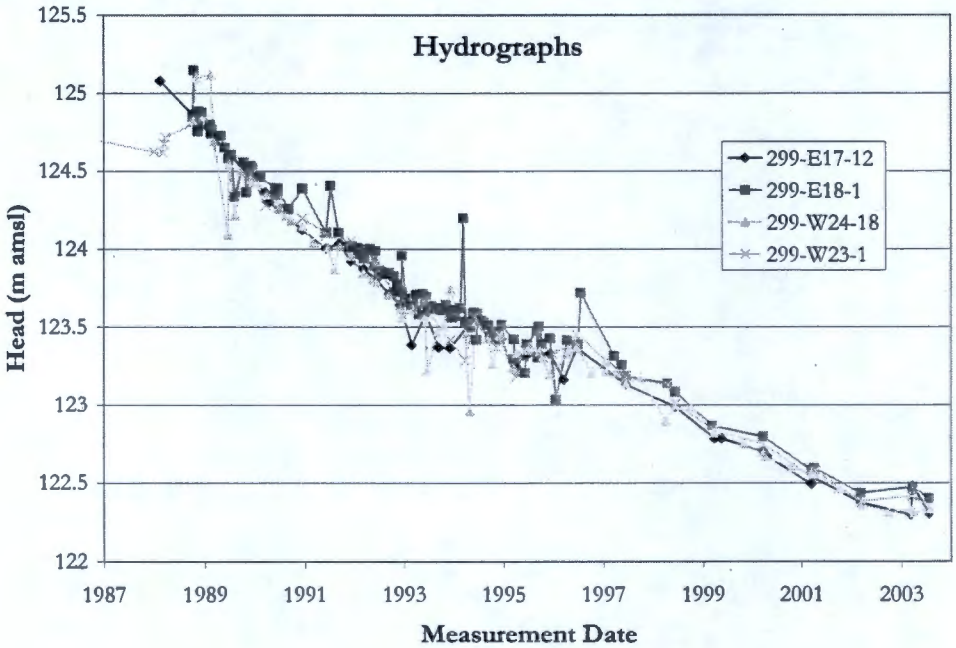

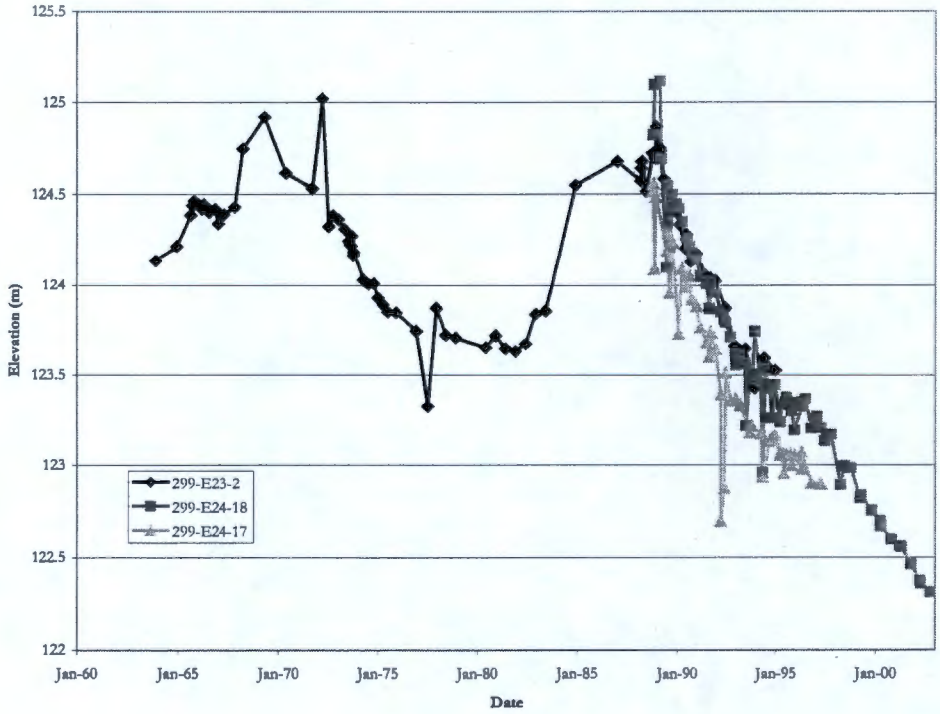

Figure 5.7. Concentration versus Time for Nitrate in Wells 299-E24-7 and 299-E24-18

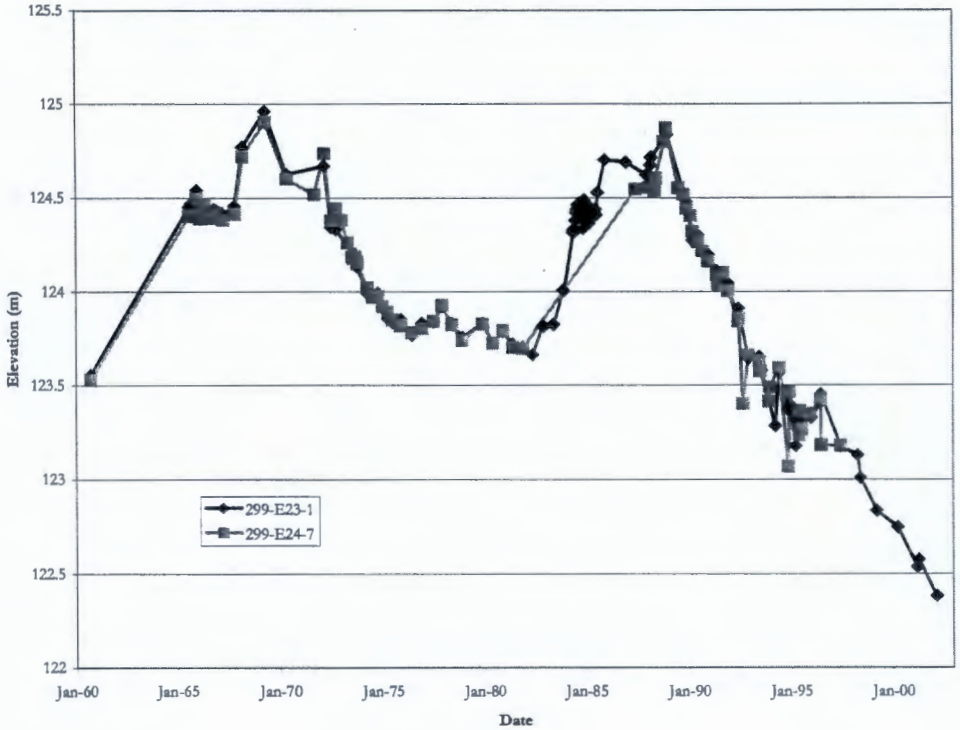

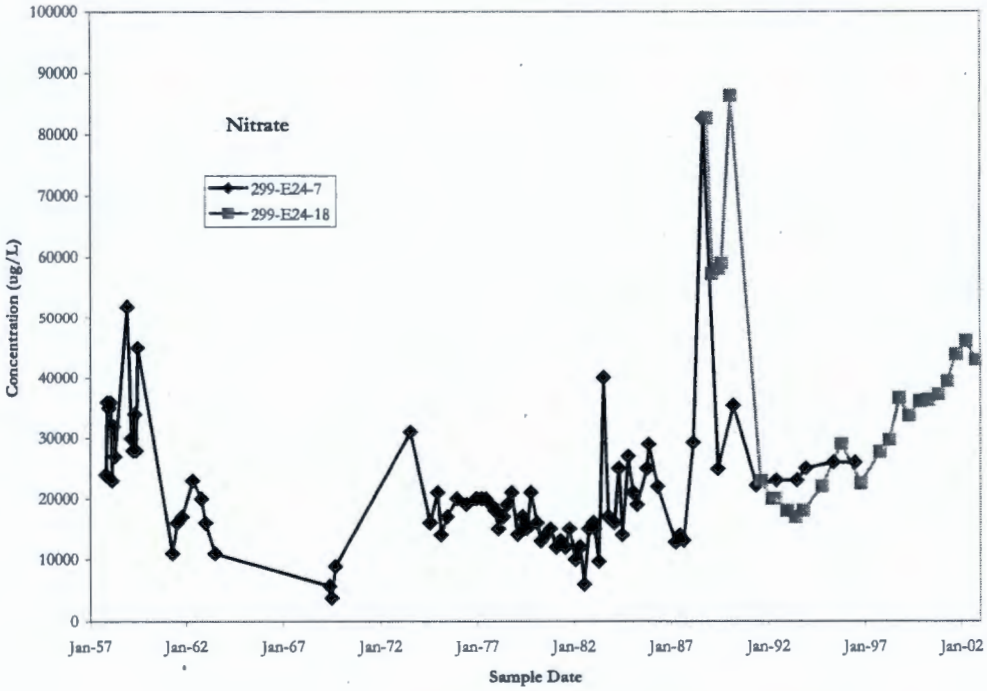

Figure 5.8. Sequence for Installation of Downgradient Monitoring Wells at the IDF

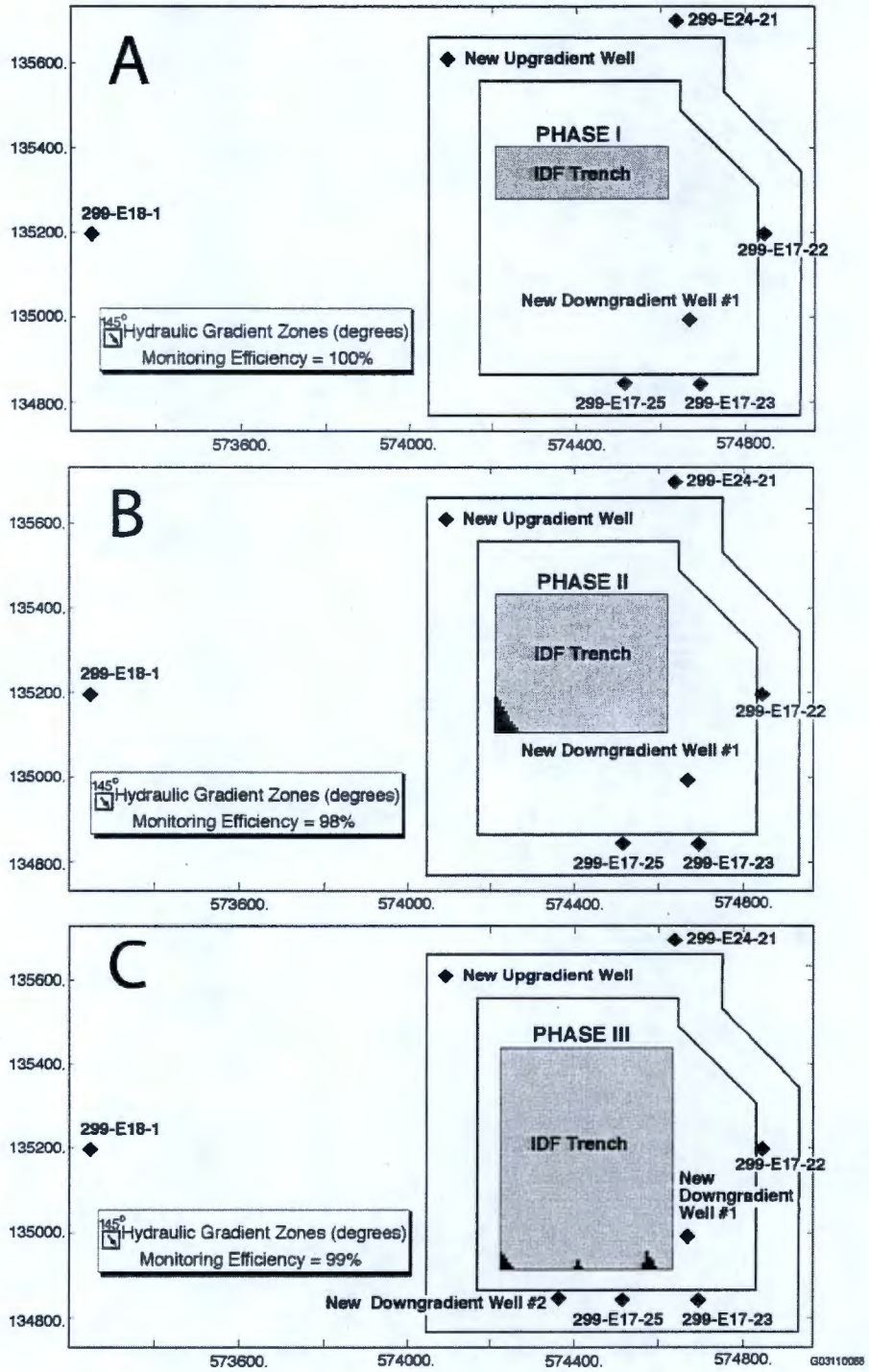

Areas in black are areas from which leaks will not be detected with the array of monitoring wells shown.

A. Area used for disposal and associated monitoring wells for construction phase I;

B. Area used for disposal and associated monitoring wells for construction phase II;

C. Area used for disposal and associated monitoring wells for construction phase III.

Table 5.1. Water Levels in Groundwater Wells in the Vicinity of the IDF Site

Well	Measure date	DTW m[a]	WT elev m[b]	Ref elev m[c]
299-E13-10	03/14/02	101.7	122.5	226.31
299-E17-12	03/14/02	100.0	121.1	221.09
299-E17-13	04/12/01	97.7	122.6	220.34
299-E17-17	04/12/99	97.8	122.8	220.54
299-E17-18	10/03/02	98.5	122.3	220.76
299-E17-20	04/09/97	97.1	123.2	220.33
299-E17-21	04/23/98	100.4	122.7	224.26
299-E17-22	05/20/02	98.1	122.5	220.59
299-E17-23	05/20/02	101.6	122.2	223.84
299-E17-25	05/21/02	98.3	126.7	225.03
299-E18-1	03/14/02	98.2	122.4	220.65
299-E18-3	06/27/96	97.8	123.4	221.20
299-E18-4	06/27/96	97.7	123.4	221.05
299-E19-1	03/22/88	100.4	124.9	225.26
299-E23-1	03/14/02	96.0	122.4	218.39
299-E23-2	12/20/94	97.2	123.5	220.77
299-E24-4	08/10/98	90.6	122.9	213.47
299-E24-7	06/11/97	96.2	123.2	219.34
299-E24-16	10/04/02	97.7	122.3	220.02
299-E24-17	04/07/97	97.36	122.9	220.16
299-E24-18	10/02/02	98.0	122.3	220.35
299-E24-21	03/22/01	95.4	122.6	217.85

[a] DTW = depth to water
[b] WT elev = elevation of water table (meters above mean sea level)
[c] Ref elev = reference elevation (meters above mean sea level, North American Vertical Datum 88 reference), generally top of well casing.

Table 5.2. Monitored Constituents for the IDF

Indicator parameters	Supplemental constituents
Chromium (filtered)	Alkalinity
Specific conductance (field)	Anions
Total organic carbon	ICP metals
Total organic halides	Turbidity (field)
pH (field)	

Table 5.3. Expected Behavior of Selected Regulated Constituents/Materials for the IDF

Constituent/material	Expected charged state	Expected mobility[1] (K_d)	Comments
Organics			
Acetonitrile	N/A	High (0.16)	Miscible with water (Howard Volume IV, 1993)
Carbon tetrachloride	N/A	High (0.60); 0.29 (DOE/RL-93-99)	Moderately soluble in water (805 mg/L) (Howard, Volume II,1990)
Creosote[2]	N/A	High (0.03 to 0.06)[3]	Relatively low solubility in water. Naphthalene solubility in water (31.7 mg/L [Howard, Volume 1, 1989]). Anthracene solubility in water (0.03 to 0.5 mg/L[Mackay et al, Volume II, 1992])
Dioxane	N/A	High (0.01)	Miscible with water (Howard, Volume II, 1990)
Ethylene glycol	N/A	Unknown[4]	Miscible with water (Howard, Volume II, 1990)
Naphthalene		Moderate (4 to 10); 1.4 (DOE/RL-93-99)	Sparingly soluble in water (31.7 mg/L [Howard, Volume I, 1989]).
Polychlorinated biphenyls	N/A	Low (20 to 100); 440 to 2,300 (DOE/RL-93-99)	Low solubility in water. 0.01 to 1 mg/L as Aloclors (Mackay et al. 1992); 0.27 to 1.45 mg/L (WHC-SD-EN-TI-201)
Tetrachloroethylene	N/A	High (2.1); 0.22 (DOE/RL-93-99)	Moderately soluble in water (1,503 mg/L) (Howard, Volume II, 1990)
Toluene	N/A	High (0.37 to 1.8); 0.18 (DOE/RL-93-99)	Moderately soluble in water (535 mg/L) (Howard, Volume II, 1990)
Trichloroethylene	N/A	High (1.0); 0.1 to 1.0 (WHC-SC-EN-TI-201); 0.11 (DOE/RL-93-99)	Moderately soluble in water (1,100 mg/L) (Howard, Volume II, 1990)
Vinyl chloride	N/A	High (0.004); 0.056 (DOE/RL-93-99)	Moderately soluble in water (2,763 mg/L) (Howard, Volume I, 1989)
Inorganics			
Antimony	Cation (Sb^{+2})	Moderate (0 to 40, best estimate: 20 [DOE/RL-93-99])	Moderately soluble (best estimate): 1,000 mg/L (DOE/RL-93-99)
Arsenic	Anion (AsO_4^{-5})	High , 0 (DOE/RL-93-99)	Moderately soluble (best estimate): 1,000 mg/L (DOE/RL-93-99)
Barium	Cation (Ba^{+2})	Moderate, 20 to 200, best estimate: 50 (DOE/RL-93-99)	Low solubility (best estimate): 1 mg/L (DOE/RL-93-99)
Beryllium	Cation (Be^{+2})	Moderate, 15 to 200, best estimate: 20 (DOE/RL-93-99)	Solubility unknown. Best estimate: 1 mg/L
Cadmium	Cation (Cd^{+2})	Moderate, 15 to 30, best estimate: 23 (DOE/RL-93-99)	Sparingly soluble. Best estimate: 25 mg/L (DOE/RL-93-99)
Chromium	Anion (CrO_4^{-2})	High (0.0 to 1.02 [PNNL-13895]); 0.001 (WHC-SC-EN-TI-201)	Low solubility: 0.5 to 10 mg/L (WHC-SC-EN-TI-201)
Lead	Cation (Pb^{+2})	Low (1,330 to 469,000 [PNNL-13895])	Low solubility: 287 µg/L in Hanford Site groundwater (PNL-9791)
Mercury	Cation (Hg^{+2})	Moderate, best estimate: 30 (DOE/RL-93-99)	Solubility unknown. Best estimate: 1 mg/L (DOE/RL-93-99)

Table 5.3. Expected Behavior of Selected Regulated Constituents/Materials for the IDF

Constituent/material	Expected charged state	Expected mobility[1] (K_d)	Comments
Nickel	Cation (Ni^{+2}) $Ni(OH)_2$ $NiCO_3$	Low (48 to 337 [PNNL-13895)	Low solubility: 1.9 mg/L in Hanford Site groundwater (PNL-9791)
Selenium	Anion (SeO_4^{-6})	High (3 to 10 [PNNL-13895]) (3 to 8 PNNL-11966)	Moderately soluble. Best estimate: 1,000 mg/L (DOE/RL-93-99)
Silver	Cation (Ag^+)	Moderate, 20 to 30, best estimate: 25 (DOE/RL-93-99)	Sparingly soluble (best estimate): 25 mg/L (DOE/RL-93-99).

N/A = Not applicable

[1] Unless cited in the column, K_d (partition coefficient) values were calculated from Koc (normalized sorption coefficient) values obtained from either the Handbook of Environmental Fate and Exposure Data for Organic Chemicals series (Volumes I-IV) (P.H. Howard, ed) or the Illustrated Handbook of Physical-Chemical Properties and Environmental Fate for Organic Chemicals series [Mackay et al. 1992a, 1992b]. For all organics (except carbon tetrachloride), the calculation assumes an organic carbon content for Hanford Site soil of 1.0%. The value of organic carbon assumed is conservative recognizing that the organic carbon content of most Hanford Site soil falls considerably below this value. However, applying this level of conservatism also recognizes that mineral-driven sorption likely plays a role in organic constituent mobility for Hanford Site soils with organic carbon content at or below 0.1% (PNNL-13560). A calculation of a K_d value using acetonitrile as an example is as follows. The literature estimated value of K_{oc} for acetonitrile is 16 (Howard 1993).

$K_d = f_{oc} \times K_{oc}$ where f_{oc}= the mass fraction of organic carbon in the soil.

K_d (acetonitrile) = 0.01 X 16 = 0.16.

[2] Creosote is a coal tar distillate containing high quantities of naphthalene and anthracene (Lewis, R.J., Sr. 1993).

[3] Because creosote is predominately a mixture of naphthalene and anthracene (footnote 2), assumed K_{oc} values for naphthalene (Howard 1989) and anthracene (Mackay et al., Volume II) in calculating a K_d range for creosote.

[4] This constituent has a low octanol/water partition coefficient indicating that its adsorption to soil would be low (Howard, Volume II, 1990)

Table 5.4. Analytical Methods and Method Detection Limits for Regulated Constituents and Indicator Parameters

Class of Compounds	Analytical Methods [1]	Method Detection Limit [3] (ug/L)
Metals	Trace Metals:	
	SW 846, Method 6010 or	0.18 - 44.8[2]
	SW 846, Method 6020 or	0.042–8.5
	EPA/600/R-94/111, Method 200.8	.05–50
	Arsenic:	
	SW 846, Method 6010 or	50
	SW 846, Method 6020 or	2
	EPA/600/R-94/111, Method 200.8	0.40
	Cadmium:	
	SW 846, Method 6010 or	4
	SW 846, Method 6020 or	0.86–2.3
	EPA/600/R-94/111, Method 200.8	0.10
	Chromium:	
	SW 846, Method 6010 or	4
	SW 846, Method 6020 or	1.9–3.1
	EPA/600/R-94/111, Method 200.8	0.5
	Lead:	
	SW 846, Method 6010 or	27
	SW 846, Method 6020 or	0.49
	EPA/600/R-94/111, Method 200.8	0.10
	Mercury:	
	SW 846, Method 6020 or	.093
	SW 846 Method 7470 or	0.1
	EPA/600/R-94/111, Method 200.8	0.05
	Selenium:	
	SW 846, Method 6010 or	30
	SW 846, Method 6020 or	1
	EPA/600/R-94/111, Method 200.8	0.30
	Thallium:	
	SW 846, Method 6010 or	32
	SW 846, Method 6020 or	0.6
	EPA/600/R-94/111, Method 200.8	0.10
Semi-Volatile Organics	SW 846, Method 8041 or	Not available
	SW 846, Method 8040	2.0 – 3.7[2]
	SW 846, Method 8270	0.24 – 50[2]
Pesticides/Polychlorinated Biphenyls	SW 846, Method 8081 (Pesticides)	0.0034 –1.9[2]
	SW 846, Method 8082 (PCBs)	0.14–0.49[2]
Herbicides	SW 846, Method 8151	.085–84[2]
Volatile Organic Compounds	SW 846, Method 8260 (VOAs)	.04–100[2]
Dioxins	SW 846, Method 8290	.00000067–.000005[2]
General Chemistry	Cyanide:	
	SW 846, Method 9012 or	2.0–2.4
	Standard Methods 4500-CN or	4
	600/4-79-020, Method 335.2	4
	Sulfide:	
	SW 846, Method 9030	180–730[2]

Table 5.4. Analytical Methods and Method Detection Limits for Regulated Constituents and Indicator Parameters

Class of Compounds	Analytical Methods [1]	Method Detection Limit [3] (ug/L)
Alkalinity	EPA-600/4-79-020, Method 310.1 & 310.2, Standard Methods 2320	850 – 2500[4]
Anions	EPA-600/R-93-100, Method 300.0	5.1–4430[2]
pH	Company specific	Not applicable
Specific conductance	EPA-600/R-93-100, Method 120.1	Not applicable

1 Changes to the Analytical Methods require prior approval per WAC 173-303-830, Appendix I, C.2.
2 Detection limit varies according to specific compound. The range of method detection limits for all compounds detected by the specific analytical method is given.
3 Method detection limits are based on historical values reported by the analytical laboratories, where available. MDLs may vary by laboratory and are updated periodically.
4 This MDL is based on Method 310.1, which was used previously. No technical difference is found between Method 310.1 and SM 2320, except the SM covers more information on the principles of the method.

5.6 REFERENCES

Public Laws

42 USC 2011 et seq. (1954). *Atomic Energy Act of 1954*. As amended, Ch. 1073, 68 Stat.919; available online at http://www.nrc.gov/reading-rm/doc-collections/nuregs/staff/sr0980/v1/sr0980v1.pdf

42 USC 6901 et seq. *Resource Conservation and Recovery Act of 1976*, as amended, Public Law 94-580, 90 Stat. 2795; available online at http://www.epa.gov/lawsregs/laws/rcra.html

Code of Federal Regulations

40 CFR 136.3 (5.5.4.1) Code of Federal Regulations, Title 40, Part 136. Whole Effluent Toxicity: Guidelines Establishing Test Procedures for Chemical Analysis of Pollutants.

40 CFR 264, Code of Federal Regulations, Title 40, Part 264, Subpart F. *Standards for Owners of Hazardous Waste Treatment, Storage, and Disposal Facilities*.

Washington Administrative Code

WAC 173-303-645, Washington Administrative Code. *Releases from Regulated Units*. Olympia, Washington.

Others

ASTM. (1986). *Annual Book of ASTM Standards*. American Society for Testing and Materials, West Conshohocken, Pennsylvania; available for purchase at http://www.astm.org/bookstore/bos

BHI-01103. (1999). *Clastic Injection Dikes of the Pasco Basin and Vicinity*, Rev. 0, Fecht, K.R., Bechtel Hanford, Inc., Richland, Washington.

BNWL. (1974). BNWL-B-360. *Selected Water Table Contour Maps and Well Hydrographs for the Hanford Reservation, 1944 - 1973*. Kipp, K.L. and Mudd, R.D., Pacific Northwest Laboratories, Richland, Washington.

DOE. (1988). DOE/RW-0164. *Repository Location, Hanford Site, Washington*, Vols. 1,2,3,4,5,6,7,8,9, U.S. Department of Energy, Office of Civilian Radioactive Waste Management, Washington, D.C.

DOE-RL. (1993). DOE/RL-92-04. *PUREX Source Aggregate Area Management Study Report*. U.S. Department of Energy, Richland Operations, Richland, Washington.

DOE-RL. (1994). DOE/RL-93-99. *Remedial Investigation and Feasibility Study Report for the Environmental Restoration Disposal Facility*, U.S. Department of Energy, Richland, Washington.

Domenico, P. A. and G. A. Robbins. (1985). *A New Method of Contaminant Plume Analysis.* Groundwater, Vol. 23, No. 4.

EPA. (1979). *Methods for Chemical Analysis of Water and Wastes.* EPA-600/4-79-020, as revised, U.S. Environmental Protection Agency, Washington, D.C.

EPA. (1986). SW-846. *Test Methods for Evaluating Solid Wastes: Physical/Chemical Methods,* 3rd Edition, as amended. U.S. Environmental Protection Agency, Office of Solid Waste and Emergency Response, Washington, D.C.

EPA. (2006). EPA QA/G-4. *Guidance on Systematic Planning Using the Data Quality Objectives Process,* U.S. Environmental Protection Agency, Office of Environmental Information, Washington, D.C.

Garber, M. S. and Koopman, F. C. (1968). *Methods of Measuring Water Levels in Deep Well: U. S. Geological Survey.* TRWI. Book 8, Chapter A-1. U. S. Government Printing Office, Washington, D. C.

Gibbons, R. D. (1994). *Statistical Methods for Groundwater Monitoring.* John Wiley & Sons, New York.

Gilbert, R. O. (1987). *Statistical Methods for Environmental Pollution Monitoring,* Van Nostrand Reinhold, New York.

HNF. (1999). HNF-4921, Rev. 0. *Immobilized Low Activity Tank Waste Inventory Data Package.* Wootan, D. W., Fluor Daniel Northwest, Inc., Richland, Washington.

Howard, P.H., Ed. (1989). *Handbook of Environmental Fate and Exposure Data for Organic Chemicals: Volume I, Large Production and Priority Pollutants.* Lewis Publishers, Chelsea, MI.

Howard, P.H., Ed. (1990) *Handbook of Environmental Fate and Exposure Data for Organic Chemicals: Volume II, Solvents 2.* Lewis Publishers, Chelsea, MI.

Howard, P.H., Ed. (1993). *Handbook of Environmental Fate and Exposure Data for Organic Chemicals:* Volume IV, Solvents and Chemical Intermediates. P.H. Howard, ed. Lewis Publishers, Ann Arbor, MI.

Lindsey, K.A. (1996). *The Miocene to Pliocene Ringold Formation and Associated Deposits of the Ancestral Columbia River System, South-central Washington and North-central Oregon.* Open File Report 96-8, Washington State Department of Natural Resources, Division of Geology and Earth Resources, Olympia, Washington.

Mackay, D., Shiu, W.Y., and Ma, K.C. (1992). *Illustrated Handbook of Physical-Chemical Properties and Environmental Fate for Organic Chemicals,* Volume I: Monoaromatic Hydrocarbons, Chlorobenzenes, and PCB's. Lewis Publishers, Ann Arbor, MI.

Mackay, D., Shiu, W.Y., and Ma, K.C. (1992). *Illustrated Handbook of Physical-Chemical Properties and Environmental Fate for Organic Chemicals,* Volume II: Polynuclear Aromatic Hydrocarbons, Polychlorinated Dioxins, and Dibenzofurans. Lewis Publishers, Ann Arbor, MI.

PNL. (1992). PNL-9791. *Estimation of the Release and Migration of Nickel Through Soils and Groundwater at the Hanford Site 218-E-12B Burial Ground.* Rhoads, K., Bjornstad, B.N., Lewis, R.E., Teel, S.S., Cantrell, R.J., Serne, L.H., Smoot, J.L, Kincaid, C.T., and Wurstner, S.K., Pacific Northwest Laboratory, Richland, Washington.

PNNL. (1998). PNNL-11957. *Immobilized Low-Activity Waste Site Borehole 299-E17-21.* Reidel, S.P., Reynolds, K.D., and Horton, D.G. Pacific Northwest National Laboratory, Richland, Washington.

PNNL. (1999). PNNL-12257, Rev. 1. *Geologic Data Package for 2001 Immobilized Low-Activity Waste Performance Assessment,* Reidel, S.P. and Horton, D.G., Pacific Northwest National Laboratory, Richland, Washington.

PNNL. (2000). PNNL-12261. *Hydrogeology for the Suprabasalt Aquifer System, 200-East Area and Vicinity, Hanford Site, Washington.* Williams, B.A., Bjornstad, B.N., Schalla, R., and Webber, W.D. Pacific Northwest National Laboratory, Richland, Washington.

PNNL. (2000). PNNL-13400http://www.pnl.gov/main/publications/external/technical_reports/PNNL-13400.pdf. *Groundwater Flow and Transport Calculations Supporting the Immobilized Low-Activity Waste disposal Facility Performance Assessment.* Bergeron, M.P. and Wurstner, S.K., Pacific Northwest National Laboratory, Richland, Washington.

PNNL. (2000). PNNL-13404. (1 of 2, 2 of 2). Hanford Site Groundwater Monitoring for Fiscal Year 2009. Hartman, M.J., Morasch, L.F., Webber, W.D., Pacific Northwest National Laboratory, Richland, Washington.

PNNL. (2001). PNNL-13560. *Assessment of Carbon Tetrachloride Groundwater Transport in Support of the Hanford Carbon Tetrachloride Innovative Technology Demonstration Program.* Truex, M.J., Murray, C.J., Cole, C.R., Cameron, R.J., Johnson, M.D., Skeen, R.S., and Johnson, C.D. Pacific Northwest National Laboratory, Richland, Washington.

PNNL. (2001). PNNL-13652. *Geologic and Wireline Borehole Summary from the Second ILAW Borehole (299-W24-21).* Reidel, S.P., Horton, D.G., and Valenta, M.M. Pacific Northwest National Laboratory, Richland, Washington.

PNNL. (2002). PNNL-13895. *Hanford Contaminant Distribution Coefficient Database and User's Guide.* Cantrell, K.J., Serne, R.J. and Last, G.V., Pacific Northwest National Laboratory, Richland, Washington.

PNNL. (2002). PNNL-14029. *Geologic and Wireline Summaries from Fiscal Year 2002 ILAW Boreholes.* Reidel, S.P., and Ho, A.M., Pacific Northwest National Laboratory, Richland, Washington.

PNNL. (2003). PNNL-14187. (1 of 2, 2 of 2). *Hanford Site Groundwater Monitoring for Fiscal Year 2002.* Hartman, M.J., Morasch, L.F., and Webber, W.D., Pacific Northwest National Laboratory, Richland, Washington.

Reidel, S. P. and Fecht, K. R. (1994). *Geologic Map of the Richland 1:100,000 Quadrangle, Washington.* Washington Division of Geology and Earth Resources Open File Report 94-8. Washington State Department of Natural Resources, Olympia, Washington.

RHO. (1981). RHO-BWI-ST-14. Chapter 3, *Wanapum and Saddle Mountains Basalts of the Cold Creek Syncline Area.* Reidel, S.P., and Fecht, K.R. In, *Subsurface Geology of the Cold Creek Syncline.* Myers, C.W. and S.M. Price, editors, Rockwell Hanford Operations, Richland, Washington.

RPP-6877. (2004). *Integrated Disposal Facility Preoperational Monitoring Plan*, Rev. 1, Horton, D.F., Reidel, S.P., and Chien, Yi-Ju, Pacific Northwest National Laboratory for Bechtel Hanford, Inc., Richland, Washington.

U. S. Geological Survey. (1977). *National Handbook of Recommended Methods for Water Data Acquisition.* Office of Water Data Coordination, Reston, Virginia. Available at http://pubs.usgs.gov/chapter11

WHC. (1989). WHC-MR-0008. *Low-Level Burial Grounds Database.* Poremba, B.E., Westinghouse Hanford Company, Richland, Washington.

WHC. (1992). WHC-MR-0391. (1992). *Field Trip Guide to the Hanford Site.* Reidel, S.P., Lindsey, K.A., and Fecht, K.R., Westinghouse Hanford Company, Richland, Washington.

WHC. (1993). WHC-SD-EN-TI-201. *Screening Performance Assessment/Risk Assessment for the Proposed Environment Restoration Disposal Facility (ERDF)*, Westinghouse Hanford Company, Richland, Washington.

WHC. (1999). WHC-SD-EN-AP-015. *Revised Groundwater Monitoring Plan for the 200 Areas Low-Level Burial Grounds*, Last, G.V. and Bjornstad, B.N., Westinghouse Hanford Company, Richland, Washington.

Grubbs, Frank (February 1969), *Procedures for Detecting Outlying Observations in Samples*, Technometrics, Vol. 11, No. 1, pp. 1-21.

Ostle B., Malone L.C. (1988). *Statistics in Research*. 4th ed. Ames (IA): Iowa State University Press.

Wilson, C. R., Einberger, C. M., Jackson, R. L., and Mercer, R. B. (1992). *Design of Ground-Water Monitoring Networks Using the Monitoring Efficiency Model (MEMO)*. Ground Water, Vol. 30, pp. 965 - 970.

Zar, Jerrold, H. (1999). *Biostatistical Analysis*, Prentice-Hall, Inc., New Jersey, pp. 360 – 388, ISBN: 0131008463.

Hanford Facility RCRA Permit Modification Notification Forms
Part V, Closure Unit 29
216-A-10 Crib

Index

- 216-A-10 Crib Part A Form, Revision 5, marked closed March 30, 2010

This page intentionally left blank.

WASHINGTON STATE DEPARTMENT OF ECOLOGY

Dangerous Waste Permit Application Part A Form

Date Received	Reviewed by:	Date: 0 9 2 2 2 0 0 8
Month Day Year	Approved by:	Date: 0 9 2 2 2 0 0 8
0 9 1 9 2 0 0 8	Closed March 30, 2010	

I. This form is submitted to: (place an "X" in the appropriate box)

☐	Request modification to a final status permit (commonly called a "Part B" permit)	
☒	Request a change under interim status	
☐	Apply for a final status permit. This includes the application for the initial final status permit for a site or for a permit renewal (i.e., a new permit to replace an expiring permit).	
☐	Establish interim status because of the wastes newly regulated on:	(Date)
	List waste codes:	

II. EPA/State ID Number

W A 7 8 9 0 0 0 8 9 6 7

III. Name of Facility

US Department of Energy – Hanford Facility

IV. Facility Location (Physical address not P.O. Box or Route Number)

A. Street

825 Jadwin

City or Town	State	ZIP Code
Richland	WA	99352

County Code (if known)	County Name
0 0 5	Benton

B. Land Type	C. Geographic Location Latitude (degrees, mins, secs)	Longitude (degrees, mins, secs)	D. Facility Existence Date Month Day Year
F	Refer to TOPO Map (Section XV.)		0 3 0 2 1 9 4 3

V. Facility Mailing Address

Street or P.O. Box

P.O. Box 550

City or Town	State	ZIP Code
Richland	WA	99352

VI. Facility contact (Person to be contacted regarding waste activities at facility)		
Name (last)	**(first)**	
Brockman	David	
Job Title	**Phone Number (area code and number)**	
Manager	(509) 376-7395	
Contact Address		
Street or P.O. Box		
P.O. Box 550		
City or Town	**State**	**ZIP Code**
Richland	WA	99352

VII. Facility Operator Information		
A. Name		**Phone Number**
Department of Energy Owner/Operator CH2M HILL Plateau Remediation Company Co-Operator for 216-A-10 Crib*		(509) 376-7395 (509) 376-0556*
Street or P.O. Box		
P.O. Box 550 P.O. Box 1600 *		
City or Town	**State**	**ZIP Code**
Richland	WA	99352
B. Operator Type F		
C. Does the name in VII.A reflect a proposed change in operator?	☐ Yes ☒ No Co-Operator* change	
If yes, provide the scheduled date for the change:	**Month** 1 0	**Day** 0 1 **Year** 2 0 0 8
D. Is the name listed in VII.A. also the owner? If yes, skip to Section VIII.C.	☐ Yes ☒ No	

VIII. Facility Owner Information		
A. Name	**Phone Number (area code and number)**	
David A. Brockman, Operator/Facility-Property Owner	(509) 376-7395	
Street or P.O. Box		
P.O. Box 550		
City or Town	**State**	**ZIP Code**
Richland	WA	99352
B. Owner Type F		
C. Does the name in VIII.A reflect a proposed change in owner?	☐ Yes ☒ No	
If yes, provide the scheduled date for the change:	**Month**	**Day** **Year**

IX. NAICS Codes (5/6 digit codes)													
A. First							**B. Second**						
5	6	2	2	1		Waste Treatment & Disposal	9	2	4	1	1	0	Administration of Air & Water Resource & Solid Waste Management Programs
C. Third							**D. Fourth**						
5	4	1	7	1		Research & Development in the Physical, Engineering, & Life Sciences							

X. Other Environmental Permits (see instructions)

A. Permit Type	B. Permit Number	C. Description

XI. Nature of Business (provide a brief description that includes both dangerous waste and non-dangerous waste areas and activities)

The 216-A-10 Crib was a percolation unit designed for the disposal of liquid wastes by way of the soil column. The 216-A-10 Crib received process distillate, which is an acidic waste stream, generated from two product concentrators in the plutonium-uranium extraction (PUREX) process. The pH of this waste ranged from as low as 1.0 to 2.5 standard units, making it a corrosive mixed waste. The 216-A-10 Crib received the corrosive mixed waste process distillate at an average flow rate of 60 gallons (227 liters) per minute. The process design capacity for the 216-A-10 Crib was 72,000 gallons (272,500 liters) per day. In 1986, approximately 138,096,000 pounds (61,278,515 kilograms) of waste were disposed of in the 216-A-10 Crib. The 216-A-10 Crib has not received waste since March 1987.

EXAMPLE FOR COMPLETING ITEMS XII and XIII (shown in lines numbered X-1, X-2, and X-3 below): A facility has two storage tanks that hold 1200 gallons and 400 gallons respectively. There is also treatment in tanks at 20 gallons/hr. Finally, a one-quarter acre area that is two meters deep will undergo *in situ vitrification*.

Section XII. Process Codes and Design Capacities								Section XIII. Other Process Codes								
Line Number		A. Process Codes (enter code)			B. Process Design Capacity		C. Process Total Number of Units	Line Number		A. Process Codes (enter code)			B Process Design Capacity		C. Process Total Number of Units	D. Process Description
					1. Amount	2. Unit of Measure (enter code)							1. Amount	2. Unit of Measure (enter code)		
X	1	S	0	2	1,600	G	002	X	1	T	0	4	700	C	001	In situ vitrification
X	2	T	0	3	20	E	001									
X	3	T	0	4	700	C	001									
	1	D	8	0	72,000	U	001		1							
	2								2							
	3								3							
	4								4							
	5								5							
	6								6							
	7								7							
	8								8							
	9								9							
1	0							1	0							
1	1							1	1							
1	2							1	2							
1	3							1	3							
1	4							1	4							
1	5							1	5							
1	6							1	6							
1	7							1	7							
1	8							1	8							
1	9							1	9							
2	0							2	0							
2	1							2	1							
2	2							2	2							
2	3							2	3							
2	4							2	4							
2	5							2	5							

XIV. Description of Dangerous Wastes

Example for completing this section: A facility will receive three non-listed wastes, then store and treat them on-site. Two wastes are corrosive only, with the facility receiving and storing the wastes in containers. There will be about 200 pounds per year of each of these two wastes, which will be neutralized in a tank. The other waste is corrosive and ignitable and will be neutralized then blended into hazardous waste fuel. There will be about 100 pounds per year of that waste, which will be received in bulk and put into tanks.

Line Number	A. Dangerous Waste No.				B. Estimated Annual Quantity of Waste	C. Unit of Measure	D. Processes									
							(1) Process Codes									(2) Process Description [If a code is not entered in D (1)]
X 1	D	0	0	2	400	P	S	0	1	T	0	1				
X 2	D	0	0	1	100	P	S	0	2	T	0	1				
X 3	D	0	0	2												Included with above
1	D	0	0	2	138,096,000	P	D	8	0							
2																
3																
4																
5																
6																
7																
8																
9																
10																
11																
12																
13																
14																
15																
16																
17																
18																
19																
20																
21																
22																
23																
24																
25																

XV. Map

Attach to this application a topographic map of the area extending to at least one (1) mile beyond property boundaries. The map must show the outline of the facility; the location of each of its existing and proposed intake and discharge structures; each of its dangerous waste treatment, storage, recycling, or disposal units; and each well where fluids are injected underground. Include all springs, rivers, and other surface water bodies in this map area, plus drinking water wells listed in public records or otherwise known to the applicant within ¼ mile of the facility property boundary. The instructions provide additional information on meeting these requirements.

Topographic map is located in the Ecology Library

XVI. Facility Drawing

All existing facilities must include a scale drawing of the facility (refer to Instructions for more detail).

XVII. Photographs

All existing facilities must include photographs (aerial or ground-level) that clearly delineate all existing structures; existing storage, treatment, recycling, and disposal areas; and sites of future storage, treatment, recycling, or disposal areas (refer to Instructions for more detail).

XVIII. Certifications

I certify under penalty of law that this document and all attachments were prepared under my direction or supervision in accordance with a system designed to assure that qualified personnel properly gather and evaluate the information submitted. Based on my inquiry of the person or persons who manage the system, or those persons directly responsible for gathering the information, the information submitted is, to the best of my knowledge and belief, true, accurate, and complete. I am aware that there are significant penalties for submitting false information, including the possibility of fine and imprisonment for knowing violations.

Operator Name and Official Title (type or print) David A. Brockman, Manager U.S. Department of Energy Richland Operations Office	**Signature** Doug A. Sharp for	**Date Signed** 9/19/08
Co-Operator* Name and Official Title (type or print) John G. Lehew, III President and Chief Executive Officer CH2M HILL Plateau Remediation Company	**Signature**	**Date Signed** 9/2/08
Co-Operator – Address and Telephone Number* P.O. Box 1600 Richland, WA 99352 (509) 376-0556		
Facility-Property Owner Name and Official Title (type or print) David A. Brockman, Manager U.S. Department of Energy Richland Operations Office	**Signature** Doug A. Sharp for	**Date Signed** 9/19/08

Comments

In Section VII. Facility Operator Information, there is no change to DOE as the Facility Owner/Operator; only a change in Co-Operator*. The change in Co-Operator* will be effective October 1, 2008.

216-A-10 Crib

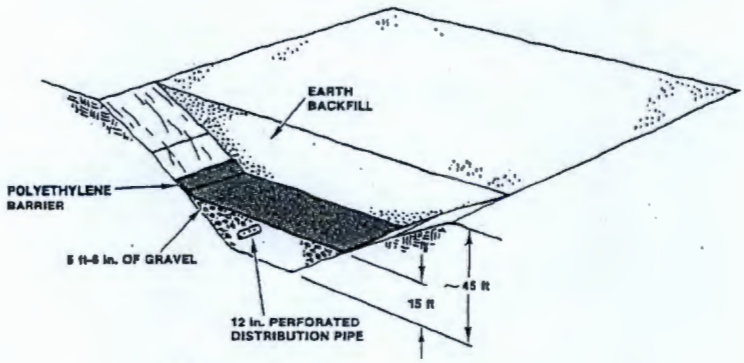

SECTION A-A

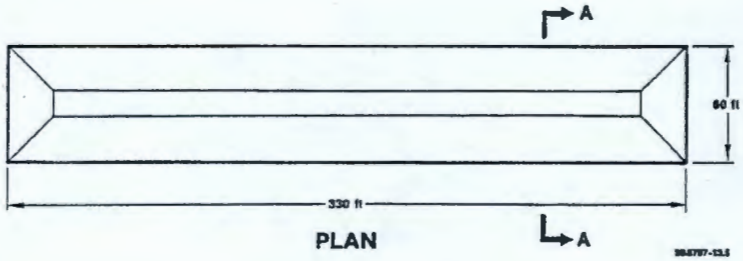

PLAN

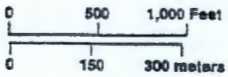

For conversions, apply the following:

Feet to meters--multiply feet by 0.3048
Inches to centimeters--multiply inches by 2.54.

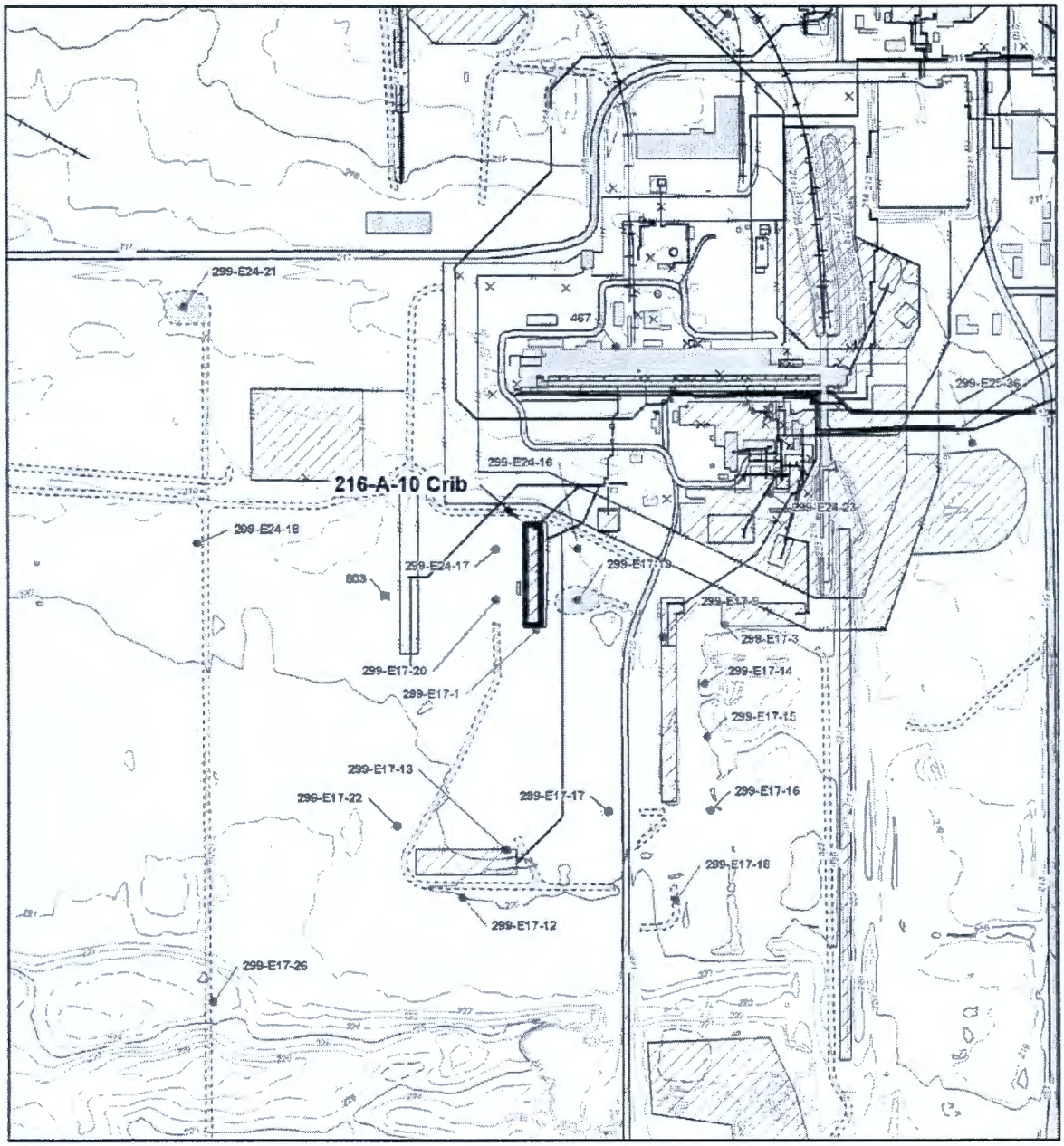

216-A-10 Crib

Prepared for:
US DEPARTMENT OF ENERGY
RICHLAND OPERATIONS OFFICE
Created and Published by:
Central Mapping Services
Fluor Hanford, Richland, WA
(509) 373-9076
Intended Use: REFERENCE ONLY
Topographic Data:
1996, Bechtel Hanford, Inc.

Hanford Site

- TSD Unit Boundary
- DOE Operating Areas
- Hanford Facility
- Injection and Withdrawal Wells
- Contours at 1 Meter Intervals
- Depression Contours
- SWMUs and Known Releases
- Linear SWMUs and Known Releases
- Spot SWMUs and Known Releases
- Buildings
- Structures
- Concrete
- Major Roads
- Service Roads
- Railroads
- Fences

Meters: 0 50 100 150 200
Feet: 0 200 400 600

O:\Projects\2005\RCRA_TSD\050614_2ndPriorityFacilityTopos2005_ThompsonMaps\051108_216A10Crib_LineDwg_85x11_Rev3.mxd - 7/18/2008 @ 10:10:52 AM

This page left intentionally blank.