1223166

12-ECD-0233

US DEPARTMENT OF ENERGY OFFICE OF RIVER PROTECTION (ORP) SUBMITTAL OF COMPLETED STACK SAMPLING SYSTEM INSPECTION CHECKLIST AMERICAN NATIONAL STANDARDS INSTITUTE (ANSI) N13.1-1999 SAMPLING AND MONITORING RELEASES OF AIRBORNE RADIOACTIVE SUBSTANCES FROM THE STACKS AND DUCTS OF NUCLEAR FACILITIES FOR THE AN AND AW DOUBLE SHELL TANK FARM TANK EXHAUSTERS STACKS 296-A-44 296-A-45 296-A-46 AND 296-A-47 EMISSION UNITS 735 736 855 AND 856 RESPECTIVELY

SECTION 2 OF 4

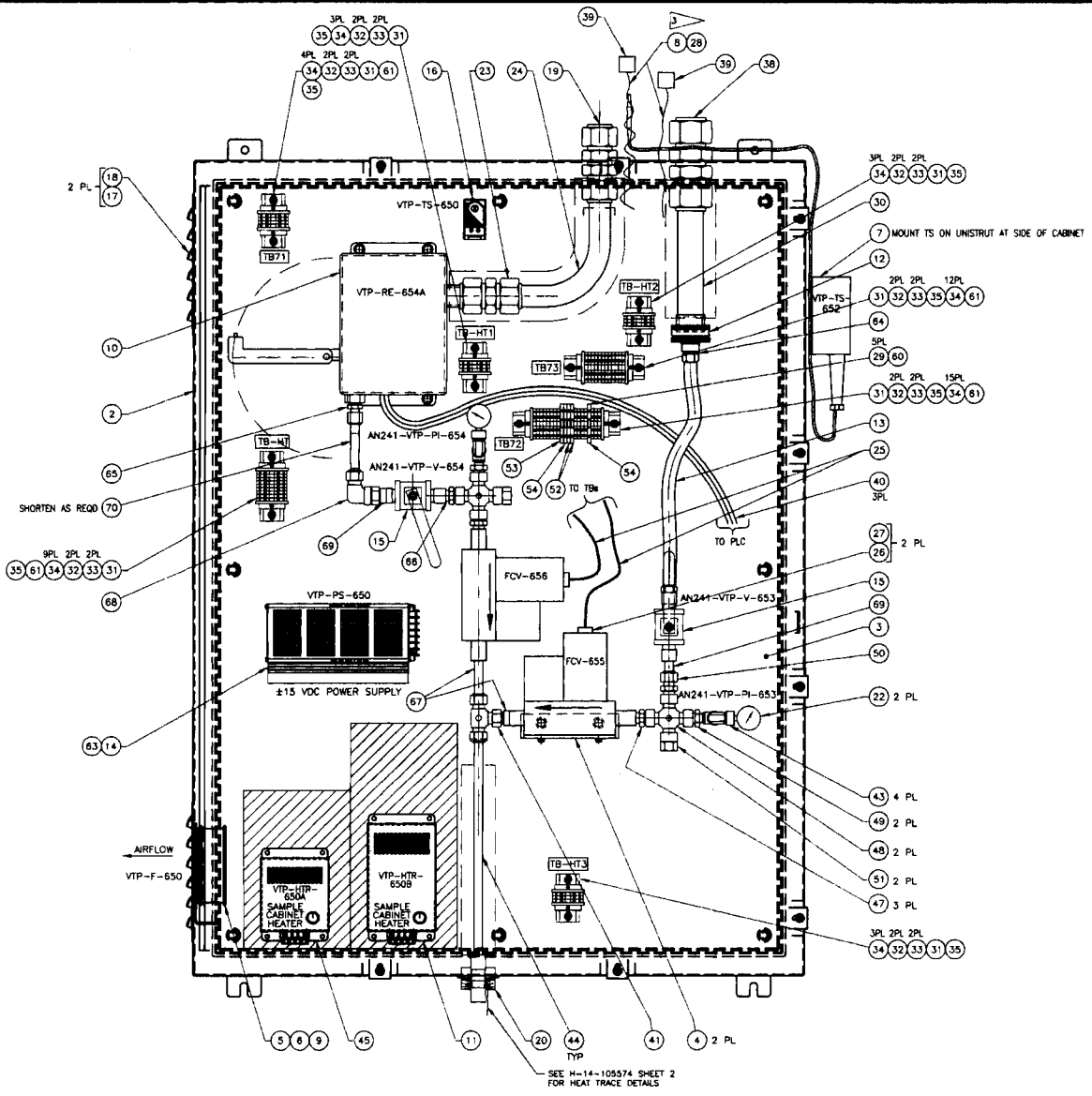

VTP-ENCL-650

1 ASSEMBLY, SAMPLE CABINET

SCALE: 3/8

DWG NO	TITLE	REF NUMBER	TITLE
DRAWING TRACEABILITY LIST		NEXT USED ON SHEET	REFERENCES

REV	DESCRIPTION	REVISIONS
6	DIRECT DRAWING REVISION PER ECN 721772-R0	KSD 5/04

PREMIER Technologies, Inc

GFOTECH Engineering & Technology

U.S. DEPARTMENT OF ENERGY
Office of River Protection

AN241-VTP (W-314)
EXHAUSTER TRAIN "B"
EFFLUENT MONITORING SYSTEM

F | 241AN | 7501 | H-14-105580 | 6

SCALE SHOWN | 820447 | SHEET 3 OF

26578

Air Sample Filter Exchange and Inspections for Record Samplers, Stack and Annulus CAMs

Tank Farm Plant Operating Procedure | **Health Physics**

USQ #TF-10-1492-D, Rev. 1

Justification:
Environmental request.

Summary of Changes:
Change sample media delivery requirement.

Next Periodic Review Date — 06/26/2011

Click for copy of Word (native) file

Table of Contents

Page

1.0 PURPOSE AND SCOPE 3
- 1.1 Purpose 3
- 1.2 Scope 3

2.0 INFORMATION 3
- 2.1 Terms and Definitions 3
- 2.2 General Information 3

3.0 PRECAUTIONS AND LIMITATIONS 4
- 3.1 Personnel Safety 4
- 3.2 Radiation and Contamination Control 5
- 3.3 Environmental Compliance 5
- 3.4 Limits 5

4.0 PREREQUISITES 6
- 4.1 Special Tools, Equipment, and Supplies 6
- 4.2 Performance Documents 6
- 4.3 Preparations 7

5.0 PROCEDURE 8
- 5.1 Exchange Record Sampler Air Sample Filter 8
- 5.2 Exchange CAM Air Sample Filter 10
- 5.3 Completion of Air Sample Filter Exchange 13

5.4 Restoration 13
5.5 Acceptance Criteria 13
5.6 Records 13

Attachment 1 - Filter/Cartridge Change Intervals 14

Attachment 2 – HMI Screen Navigation 15

Figure 1 - AMS-3, -3A CAMs Filter Paper Plunger (Exploded View) 19

Figure 2 - AMS-4 CAMs 20

1.0 PURPOSE AND SCOPE

1.1 Purpose

This procedure provides instructions for performing an air sample filter exchange to meet the requirements of TFC-ESHQ-ENV-STD-05, Radioactive Airborne Effluent Sampling.

1.2 Scope

This procedure involves a sample filter exchange and comprehensive inspection of Record Air Sampler(s), Building Exhauster CAM(s), Annulus CAM(s), and Stack CAM(s) in East and West Tank Farms, and sample filter removal. This procedure is performed when a sample filter exchange is required without a CAM source check, at an interval other than that required by procedures TF-OPS-013 through TF-OPS-031 or upon request by the Shift Manager in response to an alarm.

2.0 INFORMATION

2.1 Terms and Definitions

- ABCASH - Automated Bar Coding of Air Sample at Hanford
- HCU - Handheld Computer Unit
- WSCF - Waste Sampling and Characterization Facility.

2.2 General Information

The 702-AZ Primary Stack CAM is interlocked to shut down the running primary exhaust fan and also is interlocked to shut down AY-101, AY-102, AZ-101 and AZ-102 recirculation fans. Because of this configuration two additional key switches are used to enable or disable 241-AY/241-AZ CAM to bypass the CAM interlock. These two key switches are located to the upper right of the HS-AZK1-3 key switch, and are labeled as HS-AY (AZ) 101/AY (AZ) 102-K451-1, 241-AY (AZ) Recirculation Fans CAM Interlock Bypass Switch.

3.0 PRECAUTIONS AND LIMITATIONS

3.1 Personnel Safety

3.1.1 During windy conditions, the CAM cabinet door(s) may swing out of control when opened. Use caution when opening the door(s).

3.1.2 When inspecting CAMs and Record Samplers, be aware of excessive noise, electrical hazards, chemical odors and insects.

3.1.3 There may be a brief release of stack vapors into the workspace when the Sample lines are breached. Upgraded personal protective equipment (PPE) including respiratory protection and additional vapor monitoring may be required when opening these lines.

3.1.4 All identified hazards will be addressed in the pre-job safety meeting.

3.1.5 Compliance with TFC-ESHQ-S-STD-03, Electrical Safety is required when working with this procedure.

3.1.5.1 HPTs will enter into a CAM cabinet only after a qualified electrical worker has put the cabinet into an electrically safe condition.

NOTE - 702AZ Exhauster only requires ambient temperatures of less than 50 °F, but does not require being shut down for 30 minutes or longer in order for condensate to form.

3.1.5.2 When environmental conditions exist where extreme cold or damp weather conditions could potentially cause condensation to form inside the ventilation system (outside ambient temperature is less than 50 degrees F and [except for 702AZ] the exhauster has been shut down for longer than 30 minutes), absorbent materials should be placed around the filter paper connection when changing out filter paper. This will help to ensure liquids do not drip on electrical components/insulating barriers and maintains the electrically safe condition.

3.1.5.3 If more than expected liquids are encountered or liquids run down onto electrical components/insulating barriers, exit the cabinet. The cabinet must be reevaluated for electrical hazards.

3.1.6 When handling the absorbent materials, workers need to use impermeable gloves (not canvas or leather) that extend beyond the wrist.

3.2 Radiation and Contamination Control

3.2.1 When performed without a work package, this procedure is limited to radiological areas and work activities permitted by a general radiological work permit.

3.2.2 When work is performed in or when work will result in a high contamination, high radiation, or an airborne radioactivity area, then an approved work package must be developed which is reviewed by Radiological Control per the ALARA work planning procedure TFC-ESHQ-RP-RWP-C-03.

3.3 Environmental Compliance

3.3.1 In accordance with WAC-246-247, Washington Department of Health (WDOH) must be notified at least 7 calendar days prior to any planned operational tests of new or modified emission units that involve emissions control, monitoring, or containment systems of the emission unit. WDOH reserves the right to witness such tests [WAC-246-247-060 (4)].

3.3.2 Tank Farm ventilation systems and exhaust monitoring systems are regulated under Washington State Administrative CODE (WAC) Chapters 173-400, 173-460, and 246-247 and applicable Notices of Construction (NOC) issued to ensure compliance with these regulations. To ensure reporting requirements are met, all planned and unplanned outages of Tank Farm ventilation systems, abatement control equipment, and exhaust monitoring systems, including portable exhausters, must be immediately reported to Environmental per the Environmental On-Call List in accordance with Environmental notification procedure TFC-ESHQ-ENV_FS-C-01.

3.4 Limits

TFC-ESHQ-ENV-STD-05, Radioactive Airborne Effluent Sampling.

A comprehensive inspection is performed at the beginning of each sampling period or quarterly, whichever is less.

4.0 PREREQUISITES

4.1 Special Tools, Equipment, and Supplies

The following supplies may be needed to perform this procedure:

- 2-way portable/handheld radio for Contacting Shift Manager
- 47 mm Versapore 3000 or equivalent air sample filters
- Air sample envelopes (white 54-6700-206 and kraft [brown] 54-6700-205)
- Tweezers for filter handling, as required
- Portable Count Rate Survey Instruments
- Hearing Protection
- HCU for reading ABCASH bar code labels
- Small screwdriver (for flow adjustments)
- CAM tool (for CAMs without "a.s.p." adjustment)
- Access keys
- Key for Interlock Bypass Switch
- Keys (2) for 241-AY (AZ) recirculation fans CAM enable/disable interlock bypass switches
- Impermeable gloves for extreme weather conditions.

4.2 Performance Documents

- TF-OPS-005, Daily CAM and Record Sampler Inspections (required)
- TFC-ESHQ-ENV-STD-05, Radioactive Airborne Effluent Sampling
- TFC-OPS-MAINT-C-01, Tank Operations Contractor Work Control

If ABCASH is NOT used, the following will be needed :

- Site Form A-6003-962, Chain of Custody/Sample Analysis Request

The following additional procedures may be needed to perform this procedure:

- RPP-5779, RCI-06 Automated Bar Coding of Air Samples at Hanford Site (ABCASH)

4.3 Preparations

NOTE - When using the ABCASH system, it is NOT required to record sample information on the sample envelopes or on the Record Sample Log.

4.3.1 **PRIOR** to going to the field, **NOTIFY** the Shift Manager **AND**

OBTAIN permission for the sample filter exchange.

4.3.2 **IF** ABCASH is NOT used, **ENSURE** Site Form A-6003-962, Chain of Custody/Sample Analysis request is initiated.

NOTE - All Primary Exhausters require a Vapor Control Zone (VCZ) to be established prior to performing this activity.

4.3.3 **IF** exchanging a filter at a Primary Exhauster, **PERFORM** the following:

4.3.3.1 **CONTACT** facility IH for appropriate hazard controls.

4.3.3.2 **ENSURE** the Vapor Control Zone (VCZ) is established.

First Line Manager

4.3.4 **CHECK** the HPT has completed the following training requirements:

- HPT initial qualification
- Orientation Checklist (site form A-6003-481)
- OJTs
- AMS 4 course (course number 356030)

OR

OJT, Daily CAM & Record Inspections (course number 351572).

5.0 PROCEDURE

NOTE - Sections 5.1 through 5.3 may be performed in any logical order.

- Steps within TF-OPS-005 may be used to obtain on/off sample data.

5.1 Exchange Record Sampler Air Sample Filter

NOTE - Air sample filters are exchanged within the time frames indicated in Attachment 1 - Filter/Cartridge Change Intervals.

5.1.1 **IF** a record sampler filter exchange is NOT necessary, **GO TO** Section 5.2, Exchange Cam Air Samples.

5.1.2 **IF** system is found out of service, **NOTIFY** Shift Manager.

5.1.3 **CONTACT AND OBTAIN** Shift Manager permission to proceed with air sample exchange at designated stack.

5.1.4 **IF** necessary, **PREPARE** a 47 mm sample filter and sample envelope for each exchange.

5.1.5 **RECORD** Electronic Data Processing (EDP) code and date along outside edge of Record Air Sample.

5.1.6 **IF** during sample exchange the exhaust stack shuts down, **NOTIFY** Shift Manager immediately, **AND**

RECORD shutdown event in Radiological Control log.

5.1.7 **RECORD** required sample "OFF" information on record sample envelopes or in ABCASH HCU (For AN or AW primary exhausters see Attachment 2 for information on navigation through screens and location of needed information).

5.1.8 **REMOVE** record sample filter.

5.1.9 **IF** record sample filter is wet or damaged, **NOTIFY** Shift Manager.

5.1 Exchange Record Sampler Air Sample Filter (Cont.)

NOTE - Record sample paper should NOT be removed from white sample envelope once it has been inserted.

5.1.10 **INSERT** record sample filter into a white sample envelope.

5.1.11 **INSPECT** sample chamber rubber gaskets and filter holder screen.

5.1.12 **IF** a rubber gasket or filter holder screen is found to be damaged, **CONTACT** the Shift Manager.

5.1.13 **INSTALL** a new sample filter in the sample holder and reassemble.

5.1.14 **IF** applicable, **RESET** Record Sample Timer.

5.1.15 **AFTER** installing the new filter, **ENSURE** flow rate is within range found on TF-OPS-005, **AND**

IF necessary, **ADJUST** flow.

5.1.16 **IF** record sample flow rate cannot be adjusted within range, **NOTIFY** Shift Manager.

NOTE - Facilities using ABCASH are NOT required to record sample information on the sample envelopes or on the Record Sample Log.

5.1.17 **RECORD** required sample "ON" information on white sample envelope or in ABCASH HCU.

5.1.18 **IF** a CAM filter exchange is NOT required, **PERFORM** the following:

5.1.18.1 **PERFORM** TF-OPS-005 for applicable record sampler.

5.1.18.2 **CONTACT AND INFORM** Shift Manager of completion of air sample exchange and condition of system.

5.1.18.3 **GO TO** Section 5.3.

5.2 Exchange CAM Air Sample Filter

NOTE - The CAMs may be installed with electrical interlocks and relays that, if alarmed or overridden, can shut down the exhaust and detection systems.

- Shift Manager approval to remove filter paper and/or inspect O-Rings is required.
- Air sample filters are exchanged within the time frames indicated in Attachment 1 - Filter/Cartridge Change Intervals.
- Facilities using ABCASH are NOT required to record sample information on the sample envelopes or on the Record Sample Log.

5.2.1 **CONTACT AND OBTAIN** Shift Manager permission to proceed with air sample exchange and O-Ring inspection at designated CAM(s).

5.2.2 **IF** performing this Section on a Primary Ventilation Stack CAM, **PERFORM** the following:

5.2.2.1 **OBTAIN** Shift Manager permission to position CAM INTERLOCK BYPASS SWITCH to BYPASS position for running fan.

5.2.2.2 **IF** performing this section on an AN or AW primary exhauster CAM, **REQUEST** an operator to LOGIN at HMI on the same train as the CAM being placed in bypass.

5.2.2.3 **REQUEST** operator to position CAM INTERLOCK BYPASS SWITCH to bypass position for primary exhaust running fan.

5.2.2.4 **IF** performing procedure at 702 AZ, **REQUEST** operator to position 241-AY CAM INTERLOCK BYPASS SWITCH and 241-AZ CAM INTERLOCK BYPASS SWITCH to DISABLED positions for recirculation fans.

5.2.3 **IF** performing this section on an Annulus Ventilation Stack or 702-AZ building Exhaust Ventilation System AMS-4 CAM, **REQUEST** presence of an operator to restart the ventilation system in the event the system shuts down due to a detector fail alarm on the CAM.

5.2 Exchange CAM Air Sample Filter (Cont.)

5.2.4 **PREPARE** a 47 mm sample filter and sample envelope for each exchange.

5.2.4.1 **RECORD** Electronic Data Processing (EDP) code and date along outside edge of CAM filter paper.

5.2.5 **IF** CAM is alarming, **NOTIFY** Shift Manager, **AND**

RECORD in Radiological Control log.

5.2.6 **IF** during sample exchange the exhaust stack shuts down, **NOTIFY** Shift Manager immediately.

5.2.7 **RECORD** required sample "OFF" information on brown sample envelope, or ABCASH HCU, for next sample exchange (For AN or AW primary exhausters see Attachment 2 for information on navigation through screens and location of needed information).

NOTE - For an AMS-4 CAM, the following step will reset the history files and inhibit alarm monitoring until sufficient new history is obtained as indicated by the "READY" light. This also allows time for proper O-Ring inspection. Collection of new history will NOT occur and the alarm will remain active until the filter door is closed.

- If the alarm acknowledge button is NOT located in the immediate vicinity of the detector head (e.g., an annulus CAM, 702-AZ Building Exhaust CAM), then the following step need NOT be performed.

5.2.8 **IF** exchanging filter on an AMS-4 CAM, **ACKNOWLEDGE** alarm that occurs when filter door is opened.

5.2.9 **REMOVE** CAM filter.

5.2.10 **INSERT** CAM filter into a brown sample envelope.

5.2 Exchange CAM Air Sample Filter (Cont.)

5.2.11 **INSPECT** O-ring(s) **AND**

IF O-ring(s) are found to be damaged or missing perform the following:

5.2.11.1 **NOTIFY** Shift Manager of O-ring condition.

5.2.12 **ENSURE** air sample filter holder and screens are in place and in good condition.

5.2.13 **INSTALL** a new sample filter in the sample holder and reassemble.

5.2.14 **AFTER** installing new filter, **ENSURE** flow rate is within the range(s) found in TF-OPS-005.

5.2.15 **RECORD** required sample "ON" information on Kraft Brown envelope #54-6700-205, or ABCASH HCU, for next sample exchange **AND**

IF exchanging filter on AMS-4 CAM, **WAIT** for green "READY" light to illuminate before proceeding.

5.2.16 **IF** performing this Section on a Primary Ventilation Stack CAM, **PERFORM** the following:

5.2.16.1 **OBTAIN** Shift Manager permission to position CAM INTERLOCK BYPASS SWITCH to CAM INTERLOCK/ENABLE position.

5.2.16.2 **IF** performing this section on an AN or AW primary exhauster CAM, **REQUEST** an operator to LOGOUT at HMI.

5.2.16.3 **REQUEST** operator to position CAM INTERLOCK BYPASS SWITCH to CAM INTERLOCK/ENABLE position.

5.2.16.4 **IF** performing procedure at 702 AZ, **REQUEST** operator to position 241-AY CAM INTERLOCK BYPASS SWITCH and 241-AZ CAM INTERLOCK BYPASS SWITCH to ENABLED positions for recirculation fans.

5.2.17 **PERFORM** TF-OPS-005 for applicable CAM.

5.2.18 **CONTACT AND INFORM** Shift Manager of the completion of air sample exchanges and condition of systems.

5.3 Completion of Air Sample Filter Exchange

5.3.1 **LOG** Record Samples in the facility Record Sample Log.

5.3.2 **IF** ABCASH system is NOT used, **COMPLETE** site form, A-6003-962, Chain of Custody/Sample Analysis Request.

5.3.3 **TRANSPORT** samples to the Waste Sampling and Characterization Facility (WSCF).

5.4 Restoration

5.4.1 **DOCUMENT** inspection on Task Completion Record.

5.4.2 **DOCUMENT** all actions and notifications in HPT shift logbook.

5.4.3 **DELIVER** exchanged air sample media to the WSCF laboratory normally on the day of exchange but no longer than 10 business days following exchange.

5.5 Acceptance Criteria

5.5.1 **ENSURE** Sections 5.1 through 5.4 have been completed as required and systems/components performed as specified.

5.6 Records

NOTE - If ABCASH system is used, no records are generated during the performance of this procedure. Daily CAM & Record Sampler Inspections Data Sheets are generated and submitted if procedure TF-OPS-005 is performed.

- If ABCASH system is NOT used, the following records are generated during the performance of this procedure
  - Chain of Custody/Sample Analysis Request (A-6003-962).

The record custodian identified in the Company Level Records Inventory and Disposition Schedule (RIDS) is responsible for record retention in accordance with TFC-BSM-IRM_DC-C-02.

Attachment 1 - Filter/Cartridge Change Intervals

Location	Minimum	Normal	Maximum
296-P-33 Exhauster B	168 hours (7 days)*	N/A**	336 hours (14 days)**
296-P34 Exhauster C	168 hours (7 days)*	N/A**	336 hours (14 days)**
All Others	168 hours (7 days) *	336 hours (14 days)***	***

* Contact Environmental if filter exchange is required within less than minimum required hours of service.

** Filter exchange period may NOT exceed 336 hours (14) days. Contact Environment Compliance if exchange period is exceeded.

*** Time frames in excess of the Normal exchange period are NOT of concern as long as the sample vacuum is less than 12 inches.

Attachment 2 – HMI Screen Navigation

AW/AN Farm System Navigation Screen

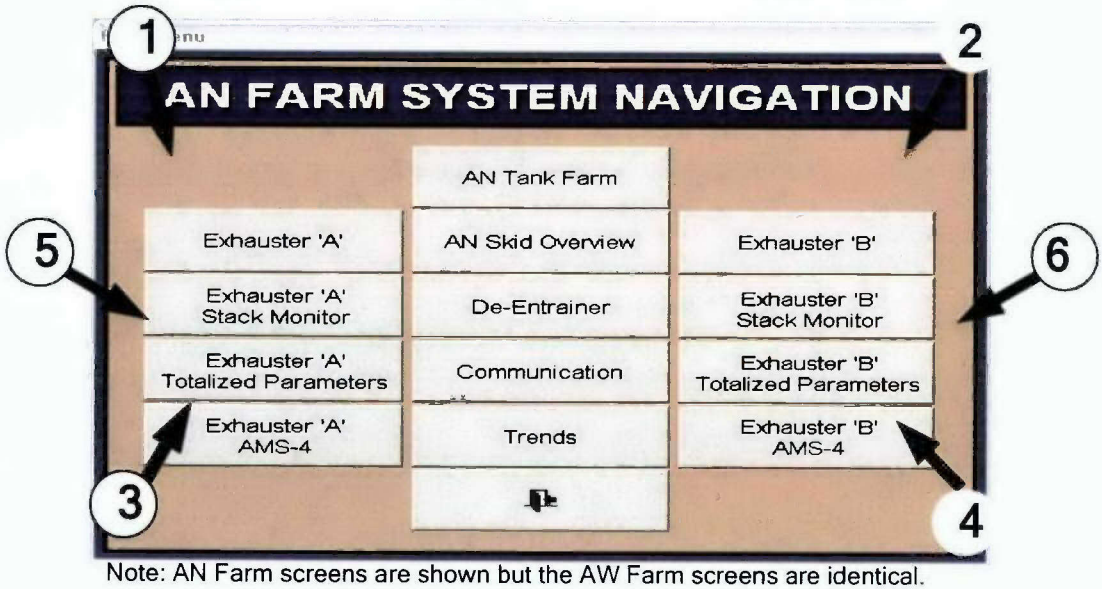

Note: AN Farm screens are shown but the AW Farm screens are identical.

[1] **PRESS** F2 to get to the AN or AW Farm System Navigation Screen as shown above.

[2] **CLICK** on the Exhauster "A" or Exhauster "B" button as needed (Shown as (1) for Exhauster "A" or (2) for Exhauster "B") to navigate to the Exhauster Process Details screen shown on the next page.

Attachment 2 – HMI Screen Navigation (Cont.)

Exhauster Process Details Screen

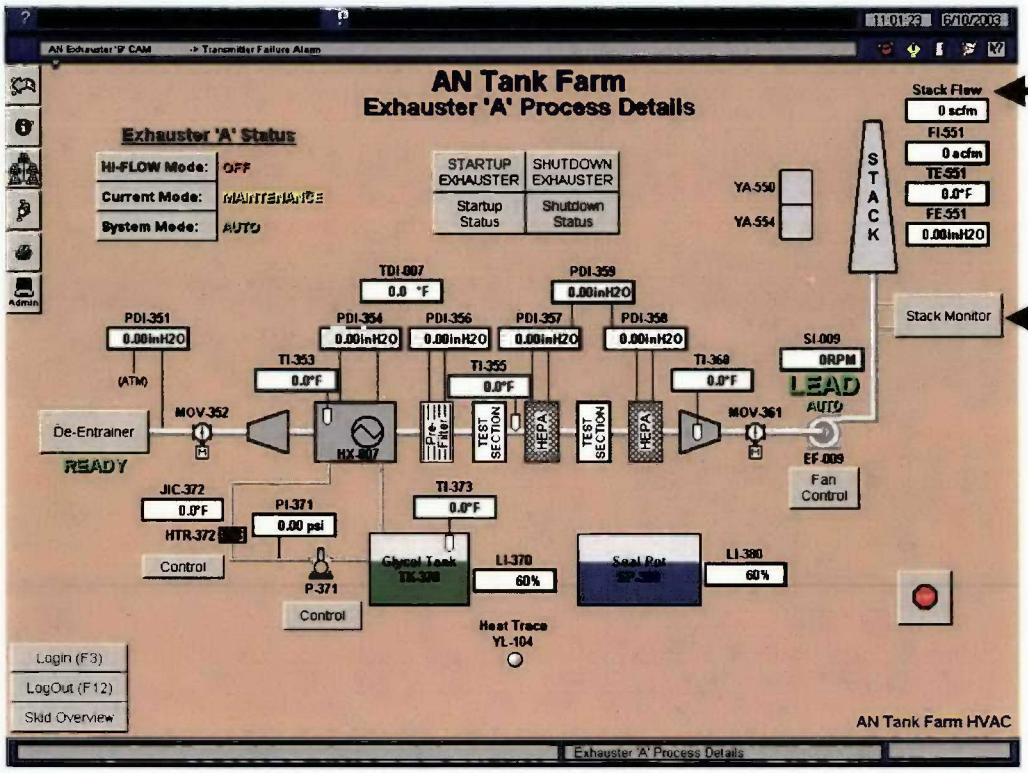

Obtain Stack Flow

CLICK on Stack Monitor to get to the Exhauster Stack Monitor screen

Note: AN Farm screens are shown but the AW Farm screens are identical.

[3] **OBTAIN** Stack Flow.from the Instrument shown above.

[4] **CLICK** on the "Stack Monitor" button shown above to go to the "Exhauster AMS-4" screen shown on the next page or click appropriate Exhauster AMS-4 button from the Farm System Navigation Screen (Shown as (3) for Exhauster "A" AMS-4 or (4) for Exhauster "B" AMS-4 on previous page.

Attachment 2 – HMI Screen Navigation (Cont.)

Exhauster AMS-4Screen

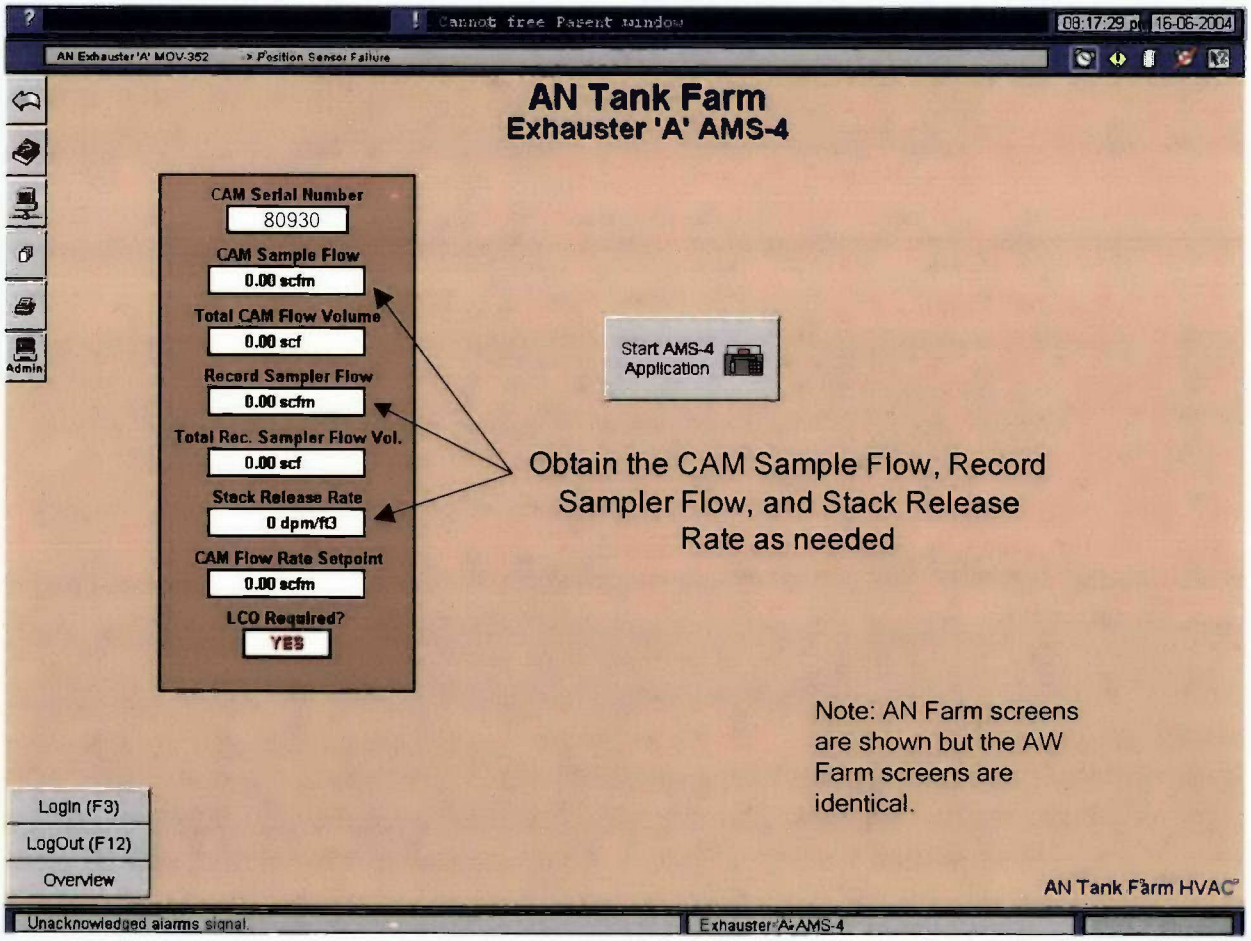

[5] **OBTAIN** the following from this screen;

- CAM Serial Number
- CAM Sample Flow
- Record Sample Flow
- Stack Release Rate
- CAM IN BYPASS will also flash in RED on this screen when ingaged.

Attachment 2 – HMI Screen Navigation (Cont.)

Exhauster Totalized Parameters Screen

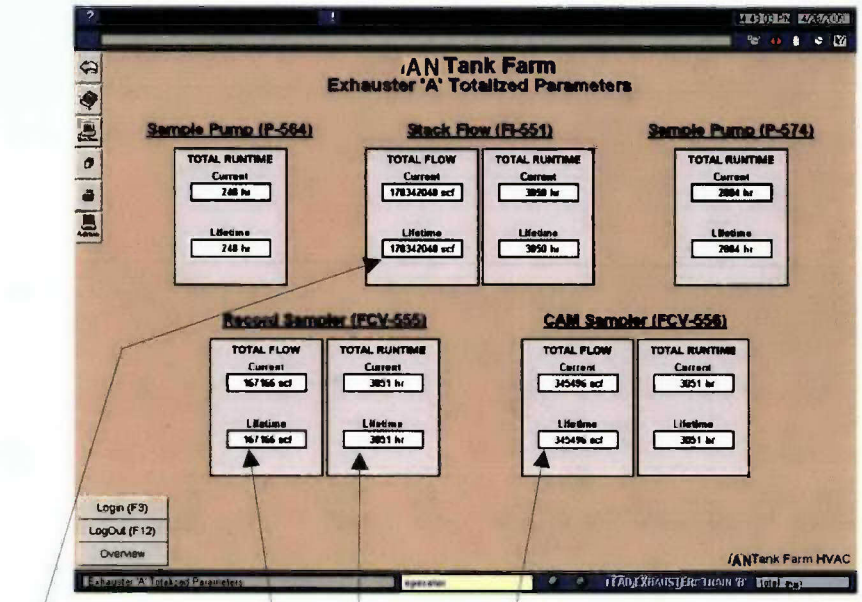

CAM Sampler Total Flow- Lifetime

Record Sampler Total Runtime- Lifetime

Record Sampler Total Flow- Lifetime

Stack Total Flow- Lifetime

[6] **CLICK** appropriate Exhauster Totalized Parameter button from the Farm System Navigation Screen (Shown as (5) for Exhauster "A" Totalized Parameters or (6) for Exhauster "B" Totalized Parameters.

[7] **OBTAIN** the following from the Exhauster Totalized Parameters screen:

- Stack {Flow} Total Flow – Lifetime
- Record Sampler Total Flow – Lifetime
- Record Sampler Total Runtime – Lifetime
- CAM Sampler Total Flow - Lifetime

Figure 1 - AMS-3, -3A CAMs Filter Paper Plunger (Exploded View)

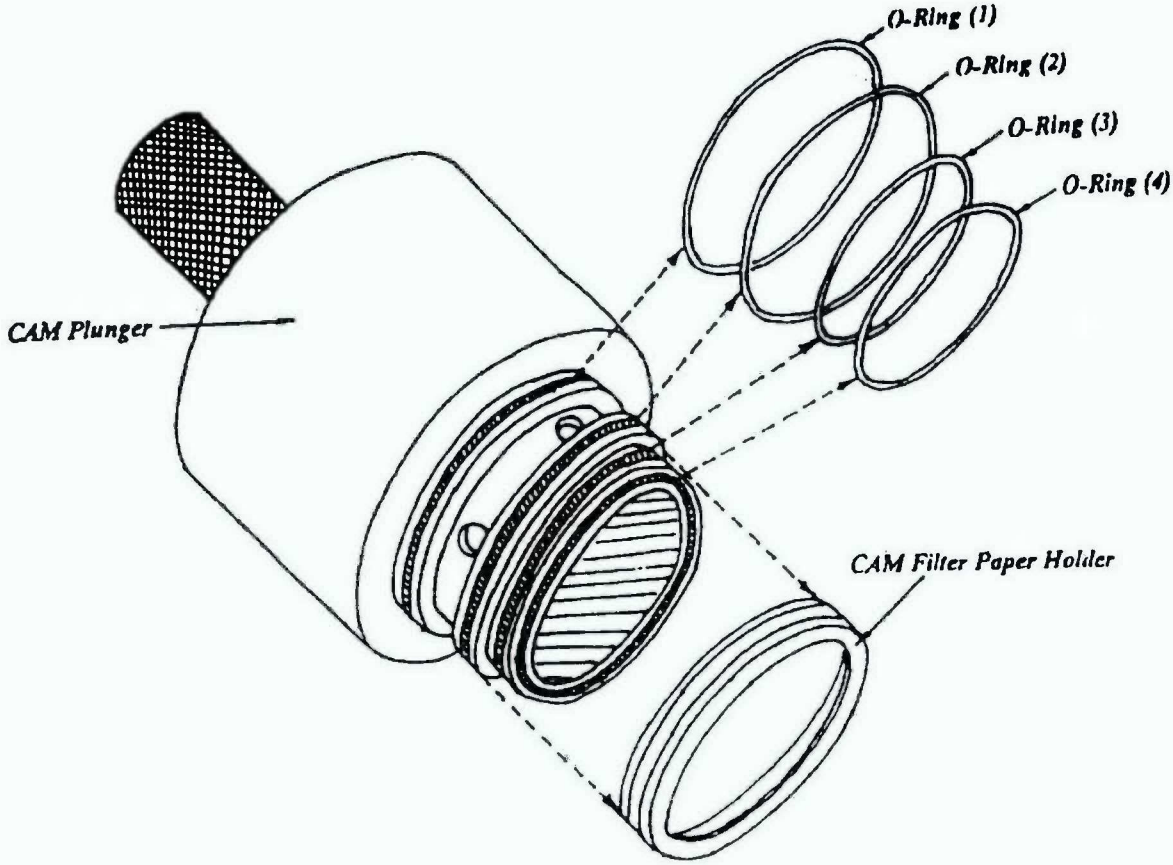

Figure 2 - AMS-4 CAMs

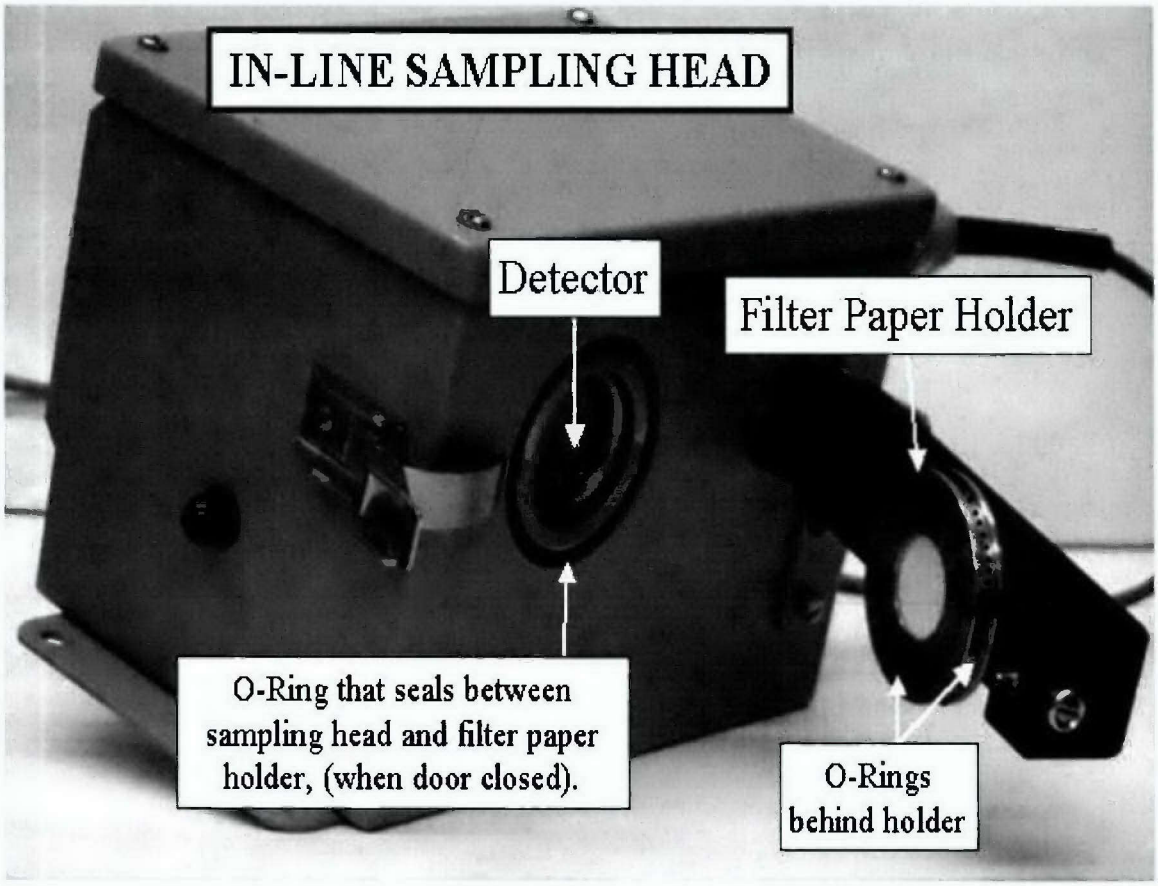

Appendix ZA, 241-AN Exhauster Stack 296-A-44 Air Flow Test Data Sheets

Tank Farm Maintenance Procedure	MAINTENANCE

USQ # N/A

Justification:
Periodic review
Summary of Changes:
no changes made

Next Periodic Review Date - 02/22/2014

Click for copy of Word (native) file

Appendix ZA, 241-AN Exhauster Stack 296-A-44 Air Flow Test Data Sheets

STACK 296-A-44 SITE SPECIFIC DATA

GENERAL INFORMATION

NOTE - Equipment identification numbers in this procedure preceded with a single number symbol (#) are prefixed by AN241-VTP-.

Stack:	27'-10 ½ " (height), 10.02" i.d. (circular diameter)
Flow Test Ports:	#FTP-559, #FTP-560, 1" coupling with plug, height above pad 24'-4 ⅗ "
Scaffolding:	None installed
Exhaust Fan:	#EF-009, 2851 acfm @ 22.7 in. wg. & 170 °F See H-14-020101, Sh. 10

PRECAUTIONS & LIMITATIONS

Erect approved scaffolding or arrange for aerial lift to allow access to stack flow test ports.

Vehicles should be kept off the dome if at all possible. Operations is required to log all traffic into AN Farm. A flagman is required for vehicle movement within the Tank Farm.

IF a loss of flow occurs, contact the Shift Manager immediately.

See 3-VBP-155 for additional precautions and limitations.

PREREQUISITES

No additional prerequisites. See 3-VBP-155.

Records

The following records are generated during the performance of this procedure and are maintained in the CHAMPS work package as record material.

- Data Sheet 1
- Data Sheet 2
- Data Sheet 3
- Data Sheet 4
- Data Sheet 5
- Data Sheet 6

The record custodian identified in the company-level Records Inventory and Disposition Schedule (RIDS) is responsible for record retention in accordance with TFC-BSM-IRM_DC-C-02.

Appendix ZA, 241-AN Exhauster Stack 296-A-44 Air Flow Test Data Sheets

Data Sheet 1

STEP	INSTRUMENT CALIBRATION DATA	
1	**AIR FLOW INSTRUMENT**	**Temperature & Relative Humidity (T & RH) Instrument**
	Flow Instrument Type	T & RH Inst. Type
	Instrument Code Number	Instrument Code Number
	Cal Due Date	Cal Due Date
ADDITIONAL INSTRUMENT CALIBRATION DATA		
2		
Comments:		

Initials/Date: _____

Data Sheet 2

BAROMETRIC PRESSURE READING					
STEP	Hanford Weather Forecaster (373-2716)				
3	Location	Station Number	Elevation (ft)	Time of Reading	Barometric Pressure (in. Hg)
	200 East	6	680		(P_b)
	Comments:				

INSTALLED INSTRUMENT READINGS			
4	Operating exhaust fan & filter bank(s):		A-Train: #EF-009
	Instrument	Location	Reading
	Stack Flow, SF_i	HMI, #CP-110 (Top right corner of HMI screen "Exhauster 'A'")	_____ SCFM
	FI-551	HMI, #CP-110 (on screen, below "Stack Flow)	_____ ACFM
	Comments:		

PRE-TEST PRESSURE LEAK CHECK			
5	[Reading ≥ 3.0 in. wg and stable (± 0.2 in, wg) for 15 sec.]	Impact Pressure _____ PASS / FAIL	Static Pressure _____ PASS / FAIL
	Comments:		

Initials/Date: _____

Figure 1 - 241-AN Stack 296-A-44 Air Flow Test Ports

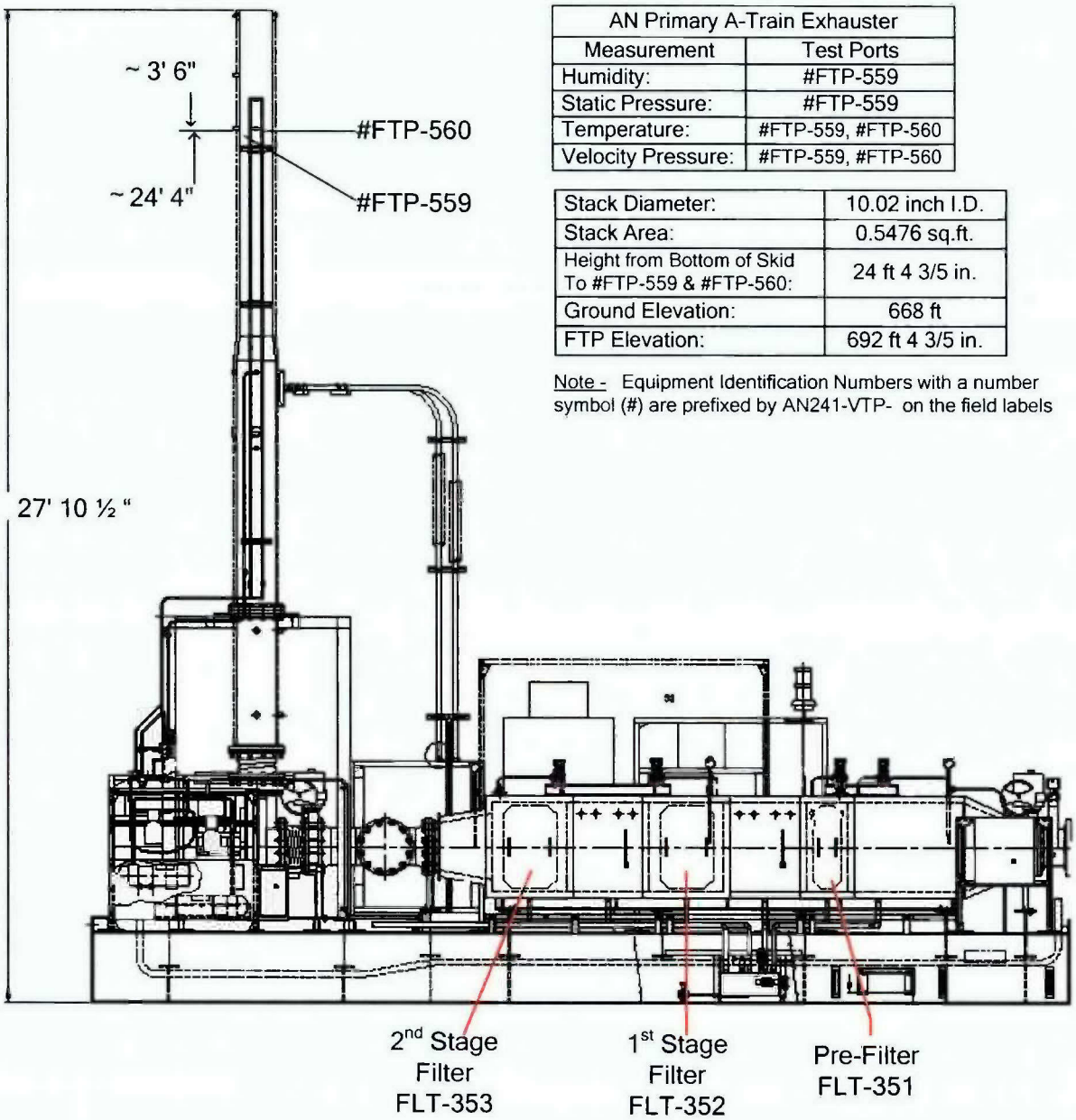

AN Primary A-Train Exhauster	
Measurement	Test Ports
Humidity:	#FTP-559
Static Pressure:	#FTP-559
Temperature:	#FTP-559, #FTP-560
Velocity Pressure:	#FTP-559, #FTP-560

Stack Diameter:	10.02 inch I.D.
Stack Area:	0.5476 sq.ft.
Height from Bottom of Skid To #FTP-559 & #FTP-560:	24 ft 4 3/5 in.
Ground Elevation:	668 ft
FTP Elevation:	692 ft 4 3/5 in.

Note - Equipment Identification Numbers with a number symbol (#) are prefixed by AN241-VTP- on the field labels

Appendix ZA, 241-AN Exhauster Stack 296-A-44 Air Flow Test Data Sheets

Data Sheet 3 (Sheet 1 of 2)

STACK AIR FLOW MEASUREMENTS						
STEP	TEST PORT #FTP-559					
6	Relative Humidity %:		(RH)			
7	Static Pressure, in. wg:		INITIAL		RETEST (IF REQUIRED)	
			(P_g)		(P_g)	
8	Traverse Points* (in.)	Temp. ts (°F)	Velocity (Initial) VP (in. wg)	Velocity (Initial) FPM** (ft/min)	Velocity (Retest) VP (in. wg)	Velocity (Retest) FPM** (ft/min)
	½					
	½					
	⅞					
	1¼					
	1¾					
	2¼					
	2⅞					
	3¾					
	6¼					
	7¼					
	7⅞					
	8⅜					
	8¾					
	9⅛					
	9½					
	9½					
9	TOTAL ts		TOTAL FPM		TOTAL FPM	

* Traverse points are measured relative to internal diameter (i.d.); none may be located within 0.5 in. of stack walls.

** $FPM = 4005\sqrt{VP}$

Time test completed: _____ Initials/Date: _____

Appendix ZA, 241-AN Exhauster Stack 296-A-44 Air Flow Test Data Sheets

Data Sheet 3 (Sheet of 2)

STACK AIR FLOW MEASUREMENTS						
STEP	TEST PORT #FTP-560					
	Traverse Points* (in.)	Temp.	Velocity (Initial)		Velocity (Retest)	
		ts (°F)	VP (in. wg)	FPM** (ft/min)	VP (in. wg)	FPM** (ft/min)
8	½					
	½					
	⅞					
	1¼					
	1¾					
	2¼					
	2⅞					
	3¾					
	6¼					
	7¼					
	7⅞					
	8⅜					
	8¾					
	9⅛					
	9½					
	9½					
9	TOTAL ts		TOTAL FPM		TOTAL FPM	

* Traverse points are measured relative to internal diameter (i.d.); none may be located within 0.5 in. of stack walls.

** $FPM = 4005\sqrt{VP}$

Time test completed: _____ Initials/Date: _____

Data Sheet 4

STEP	PITOT TUBE PERFORMANCE CHECK - #FTP-559 AND #FTP-560		
10	(PASS = P ≤ ± 5%); FAIL = P > ± 5%) P = [(VP1 - VP2) ÷ VP1)] x 100 = % P = [(____ - ____) ÷ ____] x 100 = ____% If P > ± 5% AND VP1 < 0.04 in. wg, air flow retest is NOT required; Responsible Engineer will determine acceptability of pitot tube performance.		PASS/FAIL
	Comments:		
	POST-TEST PRESSURE LEAK CHECK - #FTP-559 AND #FTP-560		
11	[Reading ≥ 3.0 in. wg and stable (± 0.2 in. wg) for 15 sec]	Impact Pressure _____ PASS / FAIL	Static Pressure _____ PASS / FAIL
	Comments:		
	STACK AIR FLOW CALCULATIONS - #FTP-559 AND #FTP-560		
12	Total ts = ts1 + ts2 + ts3 + ...	ts(total), Port #FTP-559 (°F)	(Sht 3)
		ts(total), Port #FTP-560 (°F)	(Sht 3)
		ts(total) (#FTP-559 + #FTP-560)	
13	Average ts = Total ts ÷ 32	ts(avg), (°F)	
Traverse Point Velocity (FPM) = $4005\sqrt{VP}$		Data Sheet 3	
14	Total FPM = FPM1 + FPM2 + FPM3 + ...	FPM(total) Port #FTP-559	(Sht 3)
		FPM(total) Port #FTP-560	
		FPM(total) (#FTP-559 + #FTP-560)	
15	Average FPM = Total FPM ÷ 32	fpm(avg)	
16	Total CFM = Average FPM x 0. 5476 sq ft	cfm(total)	

Initials/Date: _____

Data Sheet 5 (Sheet 1 of 3)

ENVIRONMENTAL AIR FLOW CALCULATION WORKSHEET

AVERAGE ACTUAL STACK GAS VELOCITY (v_s)

$$v_s = K_p C_p \left(\sqrt{VP}\right)_{avg} \sqrt{\frac{T_{s(avg)}}{P_s M_s}}$$

AVERAGE STACK GAS DRY VOLUMETRIC FLOW RATE (Q_{sd})

$$Q_{sd} = 60\ (1 - B_{WS})\ v_s\ A \left(\frac{T_{std}}{T_{s(avg)}}\right)\left(\frac{P_s}{P_{std}}\right)$$

$$= 60\,(1 - B_{WS}) K_p C_p \left(\sqrt{VP}\right)_{avg} A \left(\frac{T_{std}}{P_{std}}\right)\sqrt{\frac{P_s}{T_{s(avg)} M_s}}$$

Eq. Input	Description	Value
B_{ws}	Stack gas water vapor: $B_{ws} = \left(\frac{RH}{100}\right)\left(\frac{P_{ws}}{P_s}\right)$	
RH	Stack relative humidity, percent	(Sht 3)
P_{ws}	Vapor pressure of H_2O at temperature $t_{s(avg)}$ in. Hg.	
K_p	Pitot tube constant: $85.49 \frac{ft}{sec}\left[\frac{(lb)(in.\ Hg)}{(lb\text{-}mole)°R\,(in.\ H_2O)}\right]^{\frac{1}{2}}$	85.49
C_p	Pitot tube coefficient, standard	0.99
$\left(\sqrt{VP}\right)_{avg}$	Average of velocity pressure sqrt, in. wg: $\left(\sqrt{VP}\right)_{avg} = fpm_{(avg)} \div 4005$	
$fpm_{(avg)}$	Average stack gas velocity, ft/min	(Sht 4)
A	Cross-sectional stack area, ft^2	0.5476
T_{std}	Standard absolute temperature, °R	528

Data Sheet 5 (Sheet 2 of 3)

ENVIRONMENTAL AIR FLOW CALCULATION WORKSHEET		
P_{std}	Standard absolute pressure, in. Hg	29.92
P_s	Absolute stack gas pressure, in. Hg: $P_s = P_b + (P_g \div 13.6)$	
P_b	Barometric pressure at test port, in. Hg	(Sht 2)
P_g	Stack static pressure, in. wg	(Sht 3)
$T_{s(avg)}$	Average absolute stack temperature, °R $T_{s(avg)} = 460 + t_{s(avg)}$	
$t_{s(avg)}$	Average stack gas temperature, °F	(Sht 4)
M_s	Molecular weight stack gas, wet, lb/lb-mole: $M_s = 29(1 - B_{ws}) + 18B_{ws}$	
CALCULATION (Q_{sd})		
		Q_{sd} = dscfm

Environmental Initials/Date: _____

Data Sheet 5 (Sheet 3 of 3)

ENVIRONMENTAL AIR FLOW CALCULATION WORKSHEET

Installed air flow instruments qualify for environmental reporting if they have passed testing specified in 40 CFR 52, Appendix E. This testing compares instrument and Pitot tube air flow measurements over a 168-hour test period and allows ± 10% difference between their average readings. The flow rate variance check performed below provides confidence in the continued accuracy of installed air flow instrumentation.

Flow rate variance greater than ± 10% should be evaluated by the Facility HVAC Responsible Engineer to determine its cause. Continued variance greater than ± 10% between installed instrument readings and Pitot tube measurements may invalidate use of air flow instrument readings for environmental reporting.

STACK MONITOR FLOW RATE VARIANCE CHECK (*% DIFF*)

$$\%\,DIFF = \left[\frac{Q_{sd} - (SF_i)}{Q_{sd}}\right] x100$$

Eq. Input	Description	Value
Q_{sd}	Avg stack gas dry volumetric flow rate, dscfm	(DSCFM) (Sht 5)
SF_i	Indicated stack gas volumetric flow rate, scfm	(SCFM) (Sht 5)

CALCULATION (*% DIFF*)

*% DIFF** = %

* Facility Responsible Engineer shall be notified if variance (% DIFF) is greater than ± 10%.

Environmental Initials/Date: _____

Data Sheet 6

STEP	REVIEW/DISPOSITION
17	Facility Supervisor/FWS VERIFY all caps, plugs, and instrumentation have been restored to original configuration. Ventilation system restored to operating configuration: _____ _____ _____ Supervisor/FWS (Signature) Supervisor/FWS (Print Name) Date
18	Facility Supervisor/FWS NOTIFY Responsible Engineer immediately for any failed items. Enter name of Engineer contacted if failed items exist, AND RECORD work request number(s) for items requiring additional maintenance OR enter N/A if no failed items exist. Return work package to Vent and Balance. _____ _____ Responsible Engineer contacted Date _____ _____ Work Request Number Work Request Number
19	Vent and Balance reviewer VERIFY Data Sheets (with the exception of Air Flow Calculation Worksheets) are accurate, complete, and legible. Sign when complete. _____ _____ _____ Vent and Balance Reviewer (Signature) Vent and Balance Reviewer (Print Name) Date
Comments:	

QTY -010	PARTS / DASH NUMBER	NOMENCLATURE/DESCRIPTION	MATERIAL/REFERENCE	SHEET	ITEM NO
28		PLAIN WASHER, 1/2 (SERIES AND TYPE OPTIONAL)	18-8 SST		56
22		PLAIN WASHER, 3/8 (SERIES AND TYPE OPTIONAL)	18-8 SST		57
16		PLAIN WASHER, 7/8 (SERIES AND TYPE OPTIONAL)	18-8 SST		58
1	SS-1210-R-8	REDUCER, 3/4" X 1/2"	SWAGELOK		59
73		LOCK WASHER, HELICAL SPRING, 1/2 RGLR	18-8 SST		60
31		LOCK WASHER, HELICAL SPRING, 3/8 RGLR	18-8 SST		61
8		LOCK WASHER, HELICAL SPRING, 7/8 RGLR	18-8 SST		62
8		HEX BOLT, 1/2-13 UNC-2A X 2" LONG	ASTM A193 GR B8		63
17		HEX NUT, 1/2-13 UNC-2B	ASTM A194 GR 8F		64
4		HEX NUT, 3/8-16 UNC-2B	ASTM A194 GR 8F		65
8		HEX NUT, 7/8-9 UNC-2B	ASTM A194 GR 8F		66
2	SS-810-9	UNION ELBOW, 1/2 TUBE FITTING X 1/2 TUBE FITTING	SWAGELOK		67
1	H-14-105689-100	REMOVABLE STEP ASSEMBLY			68
1	H-14-105691-010	HEATER INSULATION ASSEMBLY			69
1	H-14-105691-020	OUTLET SPOOL INSULATION ASSEMBLY			70
1	H-14-105691-030	STACK INSULATION ASSEMBLY			71
1	H-14-105691-040	SEAL POT INSULATION ASSEMBLY			72
1	H-14-105691-050	DRAIN PIPE INSULATION ASSEMBLY			73
1	H-14-105691-060	EMS TUBING INSULATION ASSEMBLY			74
1	H-14-105691-070	EMS RETURN LINE INSULATION ASSEMBLY			75
2	SS-810-7-8	FEMALE CONNECTOR, 1/2 FEMALE NPT X 1/2 TUBE FITTING	SWAGELOK		76
1	8889T43	U-BOLT, 1/4-20 FOR 1" PIPE, TYPE 304 SST	McMASTER-CARR		77
AR		TUBING, 1/2 OD X .049 WALL, SMLS	ASTM A269 TYPE 304L OR 316L		78
1	BEN 664-12CHC	6" X 6" ENCLOSURE	HOFFMAN OR EQUIVALENT		79
1	NO. 5305	SEALING RING	T & B OR EQUIVALENT		80
1	NO. 5306	SEALING RING	T & B OR EQUIVALENT		81
2		HEX BOLT, 1/4-20 UNC-2A X 1" LONG	ASTM A193 GR B8		82
2		LOCK WASHER, HELICAL SPRING, 1/4 RGLR	18-8 SST		83

QTY -010	PARTS / DASH NUMBER	NOMENCLATURE/DESCRIPTION	MATERIAL/REFERENCE	SHEET	ITEM NO
10	P2034 HG	GALVANIZED TUBING CLAMP	UNISTRUT		30
1	C-SD20208LG	INSTRUMENT CONNECTION ENCLOSURE	HOFFMAN		31
1	2-250T	GROUNDING LUG, TWO CONNECTOR	SOUTHPORT INDUSTRIES		32
1	SEE NOTE 10	EXHAUST FAN AND MOTOR ASSEMBLY	AIR TECH		33
1	SS-65TW16P40-LLK	BALL VALVE, 1"	WHITEY		34
2	3434-7-V-304L	TUBE UNION, O-RING, 1 1/2 SOCKETWELD, ID TO MATCH .065 WALL TUBE	HART INDUSTRIES		35
1	F-66W12SS	WIRE WAY, 6 X 6 X 12 LONG TYPE 4X	HOFFMAN		36
1	SS-45S8	INSTRUMENT BALL VALVE, 1/2" TUBE FITTINGS	SWAGELOK		37
1	SS-810-P	PLUG, 1/2"	SWAGELOK		38
1	SS-1210-3	UNION TEE, 3/4"	SWAGELOK		39
AR		TUBING, 1 1/2 OD X .065 WALL, SMLS	ASTM A269 TYPE 304L		40
1		TUBING, 1 1/4 OD X .065 WALL X 3.0 LONG, SMLS	ASTM A269 TYPE 304L		41
1		TUBING REDUCER, CONCENTRIC BUTT WELD, 1 1/2 OD X 1 1/4 OD X .065 WALL	ASTM A269 TYPE 304L		42
AR		PIPE, 1" SCHED 40S	ASTM A312 GR TP 304L		43
20		ELBOW, 90°, 1" LR, SCHED 40S, BW	ASTM A403 WP 304L		44
1		ELBOW, 45°, 1" LR, SCHED 40S, BW	ASTM A403 WP 304L		45
1		PIPE CAP, 1" NPT, CLASS 150	ASTM A182 GR F 304L		46
AR		TUBING, 3/4 OD X 0.065 WALL, SMLS	ASTM A269 TYPE 304L OR 316L		47
2		ANGLE, 2 X 2 X 1/4 THK X 22.0 LONG	ASTM A276 TYPE 304L		48
2	8896T105	U-BOLT, 1/4-20 FOR 1" PIPE, TYPE 304 SST	McMASTER-CARR		49
8		HEX BOLT, 1/2-13 UNC-2A X 1 1/2 LONG	ASTM A193 GR B8		50
64		HEX BOLT, 1/2-13 UNC-2A X 1" LONG	ASTM A193 GR B8		51
4		HEX BOLT, 3/8-16 UNC-2A X 1 1/2 LONG	ASTM A193 GR B8		52
37		HEX BOLT, 3/8-16 UNC-2A X 1" LONG	ASTM A193 GR B8		53
8		HEX BOLT, 7/8-9 UNC-2A X 3" LONG	ASTM A193 GR B8		54
1	F-66WGSS	WIRE WAY GASKET & SCREW SET	HOFFMAN		55

PARTS LIST/MATERIAL LIST

QTY -010	PARTS / DASH NUMBER	NOMENCLATURE/DESCRIPTION	MATERIAL/REFERENCE	SHEET	ITEM NO
X	-010	ASSEMBLY, VENTILATION EXHAUSTER "A"		1	1
1	H-14-105680-010	SKID WELDMENT			2
1	H-14-105681-010	UPPER STACK ASSEMBLY			3
1	H-14-105681-020	LOWER STACK ASSEMBLY			4
1	H-14-105682-010	INLET SPOOL ASSEMBLY			5
1	H-14-105683-010	OUTLET SPOOL ASSEMBLY			6
1	H-14-105684-010	HEATER ASSEMBLY			7
1	H-14-105685-010	SEAL POT ASSEMBLY			8
1	H-14-105686-010	EFFLUENT MONITORING PUMP ASSEMBLY			9
1	02 HD 295	FILTER SYSTEM (RIGHT HAND)	FLANDERS/CSC		10
1	H-14-105688-010	UNISTRUT ASSEMBLY			11
1	H-14-105688-020	UNISTRUT ASSEMBLY			12
1	H-14-105688-030	UNISTRUT ASSEMBLY			13
1	H-14-105688-040	UNISTRUT ASSEMBLY			14
1	H-14-105689-010	STACK SUPPORT PLATE			15
					16
1	H-14-105689-030	OPEN GRIP PLANK ASSEMBLY			17
1	H-14-105687-010	PLATFORM ASSEMBLY			18
1	H-14-105690-010	INSTRUMENT ASSEMBLY			19
					20
1	H-14-105712-010	FIELD TERMINAL ENCLOSURE ASSEMBLY			21
1	H-14-105713-010	PLC CABINET ASSEMBLY			22
1	H-14-105714-010	POWER ASSEMBLY			23
1	H-14-105714-020	HEAT TRACE CABINET			24
1	H-14-105714-030	VACCUM PUMP RELAY CABINET			25
1	H-14-105714-050	MINI POWER ZONE			26
1	H-14-105715-010	SAMPLE CABINET ASSEMBLY			27
2	P1000 HG	GALVANIZED CHANNNEL, 8.0 LONG	UNISTRUT		28
2	P1000 HG	GALVANIZED CHANNNEL, 14.0 LONG	UNISTRUT		29

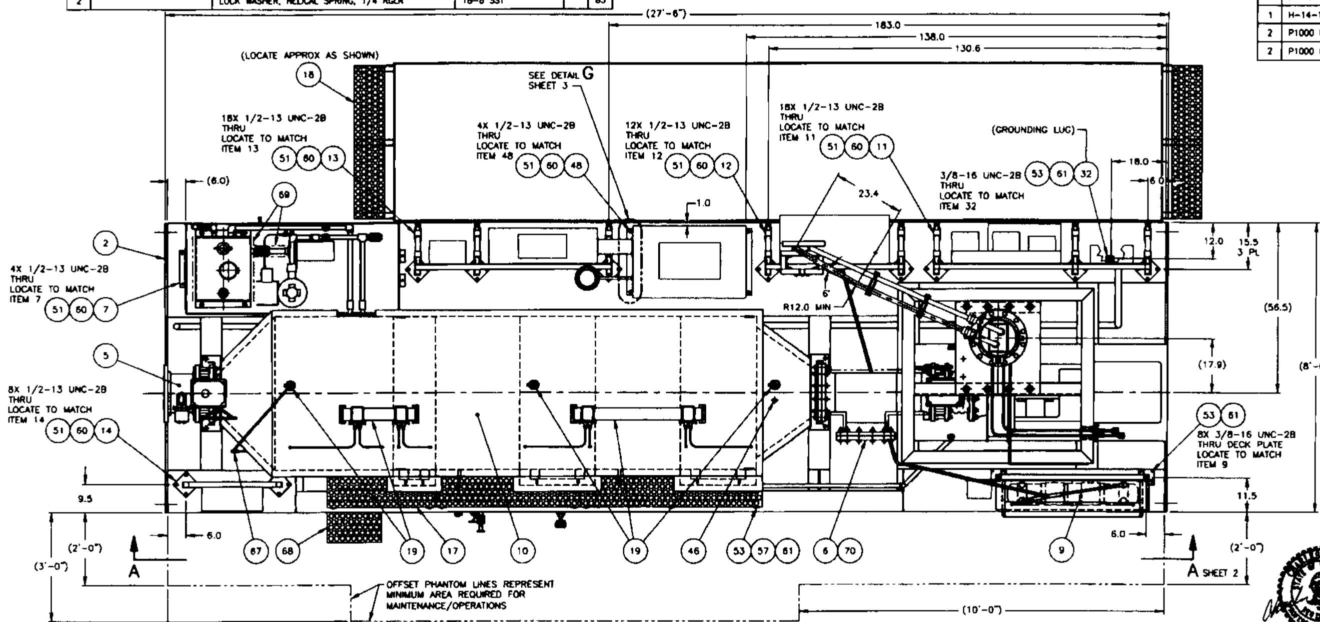

(1) ASSEMBLY, VENTILATION EXHAUSTER "A" (TOP VIEW)

SCALE: 3/4" = 1'-0"

GENERAL NOTES:

1. FABRICATION AND WELDING SHALL BE IN ACCORDANCE WITH THIS DRAWING AND SPECIFICATION PTI-W314-TS-001.
2. APPROXIMATE WEIGHT OF ASSEMBLY:
   - LESS LIFTING FIXTURE = 22,200 POUNDS.
   - LESS LIFTING FIXTURE AND UPPER STACK = 21,320 POUNDS.
3. ABBREVIATIONS ARE IN ACCORDANCE WITH ANSI Y1.1
4. REMOVE ALL BURRS AND BREAK ALL SHARP EDGES.
5. VACUUM PUMP RELAY CABINET (ITEM 25) SHALL BE LOCATED APPROX WHERE SHOWN AND ATTACHED WITH SST FASTENERS SIZED AS REQUIRED TO MATCH CABINET.
6. DISASSEMBLE BALL VALVE (ITEM 34) PRIOR TO WELDING.
7. FOR SAMPLE TUBING RUNS (FROM PROBES TO CAM AND RECORD SAMPLER):
   - THERE SHALL BE NO INWARD FACING STEPS AT THE TUBING CONNECTIONS THAT CAUSE MORE THAN A 1% REDUCTION IN TUBE DIAMETER.
   - THE TUBING ENDS SHALL BE FREE OF BURRS AND CRIMPING.
   - BENDS SHALL HAVE A CURVATURE RATIO (RADIUS OF CURVATURE OF THE BEND DIVIDED BY THE TUBE DIAMETER) OF AT LEAST 3.0.
   - FLATTENING OF THE BEND CAUSED BY A BENDING PROCESS SHALL NOT EXCEED 15%, WHERE FLATTENING IS DEFINED IN TERMS OF THE ORIGINAL AND MINOR AXES OF THE TUBE CROSS SECTION AT THE ANGULAR MIDPOINT OF THE BEND.

   SPECIAL FABRICATION TECHNIQUES MAY BE REQUIRED TO MEET THESE SPECIFICATIONS (ANSI/HPS N13.1-1999).
8. PROVIDE HOLD DOWN CLIPS AS REQUIRED ON ALL FIELD RUN TUBING. SPACING BETWEEN CLIPS SHALL NOT EXCEED 6'-0".
9. NAME TAGS DENOTING EQUIPMENT IDENTIFICATION NUMBERS WILL BE PROVIDED BY CUSTOMER. TAGS SHALL BE LOCATED ON THE IDENTIFIED ASSEMBLY COMPONENTS IN LOCATIONS THAT ARE CLEARLY VISIBLE AFTER FINAL ASSEMBLY. SEE EQUIPMENT IDENTIFICATION SCHEDULE ON SHEET 2 (ZONE 8-E).
10. ITEM 33 SHALL BE AIR TECH MODEL TROH 24A, CLASS 100 SWSI, ARRANGEMENT 8 (CCW ROTATION FROM DRIVE END) RATED FOR 2851 ACFM @ 24" SP AT 3545 RPM @ 20.07 BHP AT .052#FT3 WITH FACTORY MOUNTED 20 HP, 3600 RPM, 3/60/230/460V, VFD READY TEFC MOTOR.
11. APPLY LOCTITE THREAD LOCKER 262 PER MANUFACTURER'S INSTRUCTIONS.
12. ATTACH HOFFMAN WIRE WAY (ITEM 36) TO ITEMS 21 AND 22 USING GASKET AND SCREW SET (ITEM 55) PER MANUFACTURER'S INSTRUCTIONS. LOCATE ITEM 36 AS REQD TO MATCH CUT OUTS IN ITEMS 21 AND 22.
13. FIELD ROUTE 1/2" TUBING FROM SEAL POT TO RTD COUPLING. ENSURE THAT THE TUBING SLOPES DOWNWARD CONTINUOUSLY FROM THE RTD COUPLING TO THE SEAL POT SUCH THAT ANY FLUIDS IN THE TUBE DRAIN INTO THE SEAL POT.

AUG 12 2004

PREMIER Technology, Inc.

GForce

DIMENSIONING AND TOLERANCING SHALL BE INTERPRETED PER ANSI Y14.5M-1994
DIMENSIONS ARE IN INCHES UNLESS OTHERWISE SPECIFIED
UNSPECIFIED TOLERANCES SHALL BE:
DECIMAL .X ± .1 .XX ± .06 .XXX ± .030
ANGULAR ± 2°
ALL IMPLIED 90° ANGLES SHALL BE PERPENDICULAR WITHIN THE GREATEST TOLERANCE OF THE LINEAR DIMENSIONS
ALL COAXIAL FEATURES SHALL BE CONCENTRIC WITHIN .031 INCH UNLESS OTHERWISE SPECIFIED

DWG NO	TITLE	REF NUMBER	TITLE
DRAWING TRACEABILITY LIST		REFERENCES	
		NEXT USED ON H-14-105679	

REV	DESCRIPTION
2	INCORPORATED DCN-AW244
1	& AS-BUILT -AW064, -AW101, -AW150, -AW169 INCORPORATED DCN-AW013, -AW080,
0	RELEASED FOR CONSTRUCTION

REVISIONS

NAME: RK FISHER; DE Bowers

U.S. DEPARTMENT OF ENERGY
Office of River Protection

AW241 EXHAUSTER TRAIN "A" ASSEMBLY

F | 241AW | 8900 | H-14-105679 | 2

SCALE SHOWN | 820936 | SHEET 1 OF 4

Operate AN Tank Farm Primary Ventilation System (VTP)

Tank Farm Plant Operating Procedure **VENTILATION**

USQ # TF-12-0679-S, Rev. 0

Justification:
Operations request

Summary of Changes:
Added new Step 5.11.3 and note above Step 5.11.4

Next Periodic Review Date - 05/17/2013

Click for copy of Word (native) file

Table of Contents

Page

1.0 PURPOSE AND SCOPE 3
- 1.1 Purpose 3
- 1.2 Scope 3

2.0 INFORMATION 3
- 2.1 Terms and Definitions 3
- 2.2 General Information 3

3.0 PRECAUTIONS AND LIMITATIONS 4
- 3.1 Personnel Safety 4
- 3.2 Equipment Safety 4
- 3.3 Radiation and Contamination Control 4
- 3.4 Environmental Compliance 5
- 3.5 Limits 6

4.0 PREREQUISITES 7
- 4.1 Special Tools, Equipment, and Supplies 7
- 4.2 Performance Documents 7
- 4.3 Field Preparations 8

5.0 PROCEDURE 12
- 5.1 Start Up Primary Ventilation System 12
- 5.2 Stack Flow Adjustment 19
- 5.3 Routine Switching of Exhaust Fans and Maintenance Activities 20
- 5.4 Short Term Shut Down of A or B Train Primary Ventilation 25
- 5.5 Re-Start After Short Term Shutdown of Primary Ventilation 26

5.6 Glycol Tank Filling and Draining 27
5.7 Seal Pot Filling 30
5.8 Seal Pot Filling SP-101 & SP-102 (AN inactive VTP Seal Pots) 31
5.9 Temporary Power 32
5.10 Operate Primary Tank Inlet Stations 33
5.11 Place Exhauster in CAM Bypass Mode 36
5.12 Remove Exhauster from CAM Bypass Mode 37
5.13 Manually Switch Operating Sample Pumps 38
5.14 Records 39

Table 1 - De-Entrainer Valve Line-Up HMI Valves 40

Table 2 - De-Entrainer Valve Line-Up Non-HMI Valves 41

Table 3 - Off-Skid Valving 42

Table 4 - Initial Exhaust Train Valve Line-Up 44

Table 5 - Electrical Line-Up 46

Table 6 - Isolation Electrical Table 47

Table 7 - Inlet System Components 48

Table 8 - Inlet System Valves 49

Comment Page 51

Figure 1 - A-Train (AN241-VTP-EF-009) and B-Train (AN241-VTP-EF-010) 52

Figure 2 - Stack Sampling System 55

Figure 3- Tank Air Inlet Station Equipment 57

Figure 4- Ventilation Inlet System 58

Figure 5 - Air Flow Controller Flow Verification 60

Figure 6 - Air Flow Controller Assembly 61

1.0 PURPOSE AND SCOPE

1.1 Purpose

This procedure provides instructions for operation, switching, putting in standby, and isolation of A-Train (AN241-VTP-EF-009) and B-Train (AN241-VTP-EF-010) for 241-AN primary ventilation system.

1.2 Scope

This procedure applies to 241-AN Primary Tank Ventilation system and air inlet stations, which provides ventilation to seven waste storage tanks and associated equipment.

2.0 INFORMATION

2.1 Terms and Definitions

- EIN - Equipment Identification Number
- HMI - Human Machine Interface
- MCS Monitor and Control System.

2.2 General Information

2.2.1 It is implied that all Equipment Identification Numbers (EIN) are preceded by AN241-VTP- throughout this procedure, unless otherwise indicated.

2.2.2 The Primary A-Train and B-Train systems share one pair of de-entrainer vessels DE-005 and DE-006. These are located upstream of inlet valves MOV-352 and MOV-452. Only one de-entrainer will normally be valved in at any given time.

2.2.3 The AN Tank Farm Primary Ventilation System, including de-entrainers and tank pressure transmitters, are controlled through computer interfaces called Human Machine Interfaces (HMIs) installed on the ventilation skid. This system has two HMIs, either of which can control either train as needed.

2.2.4 Only one primary fan is to be running while the other primary fan is offline. Both fans running at the same time is not authorized at this time and requires Environmental considerations before authorization of dual train operations.

2.2 General Information (Cont.)

2.2.5 HMI provides all significant ventilation system information, including pressures, flows, temperatures, water/glycol levels, radiation levels, and MOV positions. There is an approximately 9 gallon seal pot for each exhaust train. At levels above 50% as observed on the local sight glass, the seal pots drain to a single de-entrainer seal pot. The de-entrainer seal pot is approximately 6 gallons and drains to 101-AN at levels above 90% as measured by LI-170.

3.0 PRECAUTIONS AND LIMITATIONS

3.1 Personnel Safety

WARNING - Switching or starting fans that have been down for an extended period, may cause condensate to be blown out of the stack. Personnel notifications need to be done to clear the immediate area PRIOR to switching or startup of the system to avoid potential personnel contamination.

3.1.1 Waterproof gloves and goggles, or face shield with goggles, must be worn when disconnecting couplings and inspecting ventilation system for leaks.

3.2 Equipment Safety

CAUTION - Operating the Ventilation system with a tank liquid level less than OSD-T-151-00007 limit could cause damage to tank structural integrity.

3.3 Radiation and Contamination Control

3.3.1 When work is performed in, or when work will result in, a high contamination, high radiation, or an airborne radioactivity area, an approved work package must be developed which is reviewed by Radiological Control per TFC-ESHQ-RP_RWP-C-03, ALARA work planning.

3.3.2 A general Radiological Work Permit may be used to perform this procedure contingent upon no part of the activity being performed within a High Contamination Area, High Radiation Area, or Airborne Radioactivity Area.

3.3.3 The opening of any system or component within a Radiological Area requires the presence of a Health Physics Technician to verify contamination control.

3.3.4 Externals of caps, plugs, and instrumentation shall be surveyed before and after removal from the ventilation system, and again after re-installation.

3.4 Environmental Compliance

3.4.1 Tank Farm ventilation systems and exhaust monitoring systems are regulated under Washington State Administrative Code (WAC) Chapters 173-400, 173-460, and 246-247 and applicable Notices of Construction (NOC) issued to ensure compliance with these regulations. To ensure reporting requirements are met, all planned and unplanned outages of Tank Farm ventilation systems, abatement control equipment, and exhaust monitoring systems, including portable exhausters, must be immediately reported to Environmental per the Environmental On-Call List in compliance with TFC-ESQH-ENV-FS-C-01. Environmental will determine and make the required notifications pertaining to ventilation system outages.

3.4.2 Work on potentially contaminated ventilation systems shall comply with the following when work place air sampling is required:

Tank Operations Contractor (TOC) environmental representative and Base Operations Shift Manager shall be notified. Notification will be made when:

- The initial field count of an air sample with Beta-Gamma activity greater than 0.2 DAC (Derived Air Concentration) and/or
- The initial field count of an air sample with Alpha activity greater than 5.0 DAC and/or
- Results of 7-day decay count of air samples with total Alpha activity greater than 0.2 DAC.

3.4.3 Elevated workspace air samples that are suspected to be radon or its daughter products are to be reported to the Environmental on-call list within 24 hours of field count if radon is not confirmed. If the sample decay rate is indicative of radon, whether or not the sample remains above 5.0 DAC (Derived Air Concentration) Alpha within the 24 hour verification period, notification to the Environmental on-call list is not required. If the decay rate is not indicative of radon, the Environmental on-call list must be notified. Upon notification of the elevated workspace air sample, the Environmental on-call list must notify WDOH within 24 hours.

3.4.4 Both trains are NOT to run together (High Flow Mode) at any time. Additional NOC requirements must be satisfied through additional testing before the exhaust system can be run in High Flow Mode.

3.4 Environmental Compliance (Cont.)

3.4.5 In accordance with RPP-16922 for planned maintenance activities, a shutdown to perform preventive maintenance lasting 8 hours or less does not need to be reported (the train is available as soon as the tags are lifted). However, when the down time exceeds 8 hours, the environmental on-call person will determine from the available data when to make notification to the appropriate Agency.

3.4.6 TFC-ESHQ-ENV_FS-C-01, "Environmental Notification" procedure requires that when there is a planned and/or unplanned record sampler outage (CAM also) this must be reported immediately to the Environmental on-call list.

3.4.7 Waste transfers into, out of, or within the 241-AN tank farm requires that the record sampler loop/ventilation system be operational. The CAM/record sampler loop can NOT be bypassed during these activities.

3.4.8 If exhauster train has been out of service greater than 30 days, ensure all exhauster annual calibrations and tests as identified in RPP-16922, Section 2, are completed as required in Step 4.3.3.

3.5 Limits

Some steps in this procedure implement Defense in Depth controls as described in RPP-13033, Tank Farms Documented Safety Analysis.

OSD-T-151-00007, Operating Specifications for the Double Shell Storage Tanks

RPP-11413, Technical Basis for Ventilation System Requirements

RPP-16922, Environmental Specifications Requirements

TFC-ESHQ-ENV-STD-06, Environmental Requirements Standard

4.0 PREREQUISITES

4.1 Special Tools, Equipment, and Supplies

The following supplies may be needed to perform this procedure:

- Waterproof gloves
- Goggles or face shield with goggles
- Absorbent rags
- 2-way radio
- Container for seal pot water
- 50/50 solution of propylene glycol and water
- AN Farm access keys
- CAM Interlock Bypass key
- Funnel/Fill hose.

4.2 Performance Documents

The following procedures may be needed to perform this procedure:

- TF-OR-DR-AN, AN Daily Rounds
- TF-OPS-005, Daily CAM and Record Sampler Inspections
- TF-OPS-006, Air Sample Filter Exchange for Record Samplers and Stack CAMs
- TF-OPS-031, Inspection and Source Checks of AMS-4 CAMs and Effluent Record Samplers on AN/AW HMI-Controlled Exhausters
- TF-OPS-028, Inspections and Source Checks of AMS-4 CAMs and Effluent Record Samplers on HMI-Controlled Exhausters
- ARP-T-221-EXH(A), Respond to A-Train Alarms at 241-AN-VTP Exhaust Skid
- ARP-T-221-EXH(B), Respond to B-Train Alarms at 241-AN-VTP Exhaust Skid
- H-14-030101, Sheets 1 through 6, AN241-VTP (W-314) Exhauster Train "A" One Line Diagrams
- H-14-020101, Sheets 1, 2, and 7 through 13, AN241 Primary Ventilation System P & ID.

4.3 Field Preparations

Check Done ✓

NOTE - The steps in this section may be performed in any logical order or concurrently.

_____ 4.3.1 **IF** performing a START-UP of the Primary Ventilation system, Shift Manager **AUTHORIZES** using one of the following methods:

Check (✓)

_____ Section 5.1 Start Up Primary Ventilation System (Initial line ups).

_____ Section 5.5 Re-Start After Short Term Shutdown.

4.3.2 **IF** performing a SHUTDOWN of the ventilation system, Shift Manager/OE **VERIFY** there are no ongoing transfers, mixer pump operation, air lift circulator operation activities in AN Farm that require this system to be operating.

_____ / _____ / _____

Signature Print Date

Shift Manager /OE

4.3 Field Preparations(Cont.)

NOTE - Steps 4.3.3 and 4.3.4 are required for operability checks, and will be required for initial start-up in Section 5.1.

4.3.3 **IF** performing an exhauster start-up after a greater than 30 day shut down, as identified in the Table below, **VERIFY** the following differential pressure gauges, and temperature gauges have been calibrated within the last 365 days and HEPA filters have been challenge (aerosol) tested within the last 365 days in accordance with RPP-16922, Section 2. **(RPP-11413, RPP-16922)**

296-A-44 (A-Train AN241-VTP Primary Tank Ventilation System)			
Vent Sub-System	**Sub-System Equipment Id. Number (EIN)**	**PM Id**	**(✓or OS) If Calibrations/Tests are current or Out of Service/Specifications[1] (N/A) If Not Applicable**
VTP Exhauster A-Train dp & Temperature Instrumentation	AN241-VTP-PDIT-356	ET-08257	
	AN241-VTP-PDIT-357	ET-08253	
	AN241-VTP-PDIT-358	ET-08254	
	AN241-VTP-TE-355	ET-09143	
VTP A-Train Exhaust HEPA Filter Challenge Tests	AN241-VTP-FLT-352	ET-09164	
	AN241-VTP-FLT-353	ET-09165	
296-A-45 (B-Train AN241-VTP Primary Tank Ventilation System)			
VTP Exhauster B-Train dp & Temperature Instrumentation	AN241-VTP -PDIT-456	ET-08260	
	AN241-VTP -PDIT-457	ET-08255	
	AN241-VTP-PDIT-458	ET-08256	
	AN241-VTP-TE-455	ET-09149	
VTP B-Train Exhaust HEPA Filter Challenge Tests	AN241-VTP-FLT-452	ET-09166	
	AN241-VTP-FLT-453	ET-09167	

Special Instructions :

[1] **With the exception of aerosol testing of filters (using a work package), DO NOT start exhauster until <u>all</u> required calibrations/Tests are current.**

(Continued on Next Page)

4.3 Field Preparations(Cont.)

Vent Sub-System	Sub-System Equipment Id. Number (EIN)	PM Id	(✓or OS) If Calibrations/Tests are current or Out of Service/Specifications[1] (N/A) If Not Applicable
VTP Inlet Station HEPA Filter	AN101-VTP-FLT-202	ET-06425	
	AN102-VTP-FLT-204	ET-06426	
	AN103-VTP-FLT-206	ET-06427	
	AN104-VTP-FLT-208	ET-06428	
	AN105-VTP-FLT-210	ET-06429	
	AN106-VTP-FLT-212	ET-06430	
	AN107-VTP-FLT-214	ET-06431	
AN241 A-TRAIN De-Entrainer	AN241-VTP-PDIT-152	ET-08263	
AN241 B-TRAIN De-Entrainer	AN241-VTP-PDIT-162	ET-08264	

Special Instructions :

[1] **With the exception of aerosol testing of filters (using a work package), DO NOT start exhauster until all required calibrations/Tests are current.**

_____ / _____ / _____

Signature Print Date

Shift Manager /OE

4.3.4 **VERIFY** calibration of continuous air monitor (CAM) has been performed within last 365 days. **(RPP-16922)**

A-Train: ET-09064 B-Train: ET-09063

Date Last Done: _____

_____ / _____ / _____

Signature Print Date

Shift Manager /OE

4.3 Field Preparations(Cont.)

NOTE - Running system in CAM bypass requires notification of Environmental (See Steps 3.4.5 to 3.4.6 for requirements).

4.3.5 **IF** exhauster is to be run without a stack CAM, **OBTAIN** permission from Shift Manager to run system in CAM Bypass.

_____ / _____ / _____

Signature Print Date
Shift Manager /OE

4.3.6 **VERIFY** applicable pre-requisites of Section 4.3 and all fieldwork affecting the start-up of the primary ventilation system has been completed and start-up of the identified exhaust train is authorized **AND**

CHECK ✓ exhaust train authorized to start-up.

A-Train: _____ B-Train: _____

_____ / _____ / _____

Signature Print Date
Shift Manager /OE

5.0 PROCEDURE

NOTE - If high radiation alarm interlock requires bypass, CAM Interlock bypass permission must be obtained from shift office. When work is complete, bypass must be disabled through HMI and shift office notified.

- All sections apply to both A-Train and B-Train. If each train EINs are not listed in full nomenclature, then A-Train partial EIN will be listed first followed by B-Train partial EIN in square brackets, e.g., V-555 [655].
- Only one fan train is to be in operation at any one time.
- Unless otherwise noted, HMI operations take place on the appropriate Exhauster Process Detail Screen (Exhauster 'A', Exhauster 'B').
- Sections may be performed as needed, provided applicable pre-requisites are met.
- 'Demister' and 'De-Entrainer' are used interchangeably by the HMI software.

5.1 Start Up Primary Ventilation System

NOTE - Section 5.1 provides valve line-up, electrical line-up, and initial start-up and re-start of primary ventilation system after long term shut down (>30 days), unknown field condition(s), or at discretion of Shift Manager.

5.1.1 **CHECK** all applicable pre-requisites of Section 4.3 have been met before performing this section.

> **CAUTION**
>
> **Operating the Ventilation system with a tank liquid level less than OSD-T-151-00007 limit could cause damage to tank structural integrity.**

5.1.2 **CHECK** liquid level in each tank is $\geq$ 6.0 inches. **(OSD-T-151-00007)**

5.1.2.1 **IF** tank liquid level(s) are not within limits identified in Step 5.1.2, **STOP WORK AND**

NOTIFY Shift Manager/OE.

5.1.3 **IF** exhauster is to be run using temporary emergency power, **GO TO** Section 5.9 as required for connecting temporary power.

5.1 Start Up Primary Ventilation System (Cont.)

5.1.4 **IF** temporary emergency power is NOT used to run the exhauster, **ENSURE** appropriate main transfer switch identified below is in the position identified.

Train	EIN	Position
A-Train	AN241-VTP-MTS-350	Power Source - AN241-EDS-DP-130, BKR #1
B-Train	AN241-VTP-MTS-450	Power Source - AN241-EDS-DP-130, BKR #4

5.1.5 **PERFORM** electrical line-up for selected train per Table 5 **AND**

INITIAL applicable block as equipment is operated or verified in position.

NOTE - Either exhauster HMI may be used to run either exhauster.

5.1.6 **POWER UP** at least one exhauster HMI as required.

5.1.7 **LOGIN** at Windows NT Login Screen, as needed.

5.1.8 **PUSH** F3 key and LOGIN as Operator on Citect HMI software.

5.1.8.1 **IF** Citect software does not appear to be communicating or appears frozen, **RE-START** Citect Software by clicking on "Restart Citect" button under the Administrative Controls located on the left hand side of the screen.

5.1.9 **SELECT** Exhauster A or Exhauster B, as applicable.

5.1.10 **ACKNOWLEDGE** all alarms on HMI alarms page (F5).

NOTE - Normally, only one primary de-entrainer is valved in.

5.1.11 **OBTAIN** direction from Shift Manager/OE to determine whether DE-005 or DE-006 or both de-entrainers are to be valved in.

Check
(✓)

_____ DE-005

_____ DE-006

_____ Both DE-005 and DE-006

5.1 Start Up Primary Ventilation System (Cont.)

NOTE - De-entrainer valve line-up is established on HMI first, prior to MANUAL line-up of valves.

5.1.12 **ENSURE** de-entrainer valving is in accordance with Table 1 by performing Steps 5.1.12.1 through 5.1.12.4:

5.1.12.1 **RIGHT-CLICK** on desired valve on de-entrainer HMI screen.

5.1.12.2 **SELECT** [Req'd Position] to change position on screen, as needed.

5.1.12.3 **CLOSE** window.

5.1.12.4 **REPEAT** as necessary for remaining de-entrainer valves.

5.1.13 **ENSURE** valving is in accordance with Table 1 using the HMI **AND**

INITIAL appropriate blocks on Table 1 as valves are positioned.

5.1.14 **AS** directed by Shift Manager or when coming out of long term shutdown, **POSITION** applicable MANUAL valving for de-entrainers per Table 2 **AND**

INITIAL appropriate blocks as valves are positioned.

5.1.15 **POSITION** off-skid valving per Table 3 **AND**

INITIAL appropriate blocks as valves are positioned or verified.

5.1.16 **POSITION** exhauster train valving per Table 4 **AND**

INITIAL appropriate blocks as valves are positioned or verified.

5.1.17 **AS** directed by Shift Manager, **POSITION** AN-Farm inlet station bypass and butterfly valves per Table 8 (See Figure 4) **AND**

INITIAL AND DATE appropriate blocks as valves are positioned or verified.

5.1.17.1 **INDEPENDENTLY VERIFY** that AN101-VTP-V-271 and AN102-VTP-V-272 are OPEN **AND**

DOCUMENT on Table 8.

5.1 Start Up Primary Ventilation System (Cont.)

5.1.17.2 **IF** directed by Shift Manager to position valves other than as listed in Table 8, **RECORD** deviation on Comment Page.

5.1.18 **CHECK** de-entrainer seal pot level LI-170 (located in field or on de-entrainer HMI screen) is above 40%.

5.1.18.1 **IF** level is not within range, **NOTIFY** Shift Manager **AND**

AS directed by Shift Manager, **FILL/RE-FILL** de-entrainer seal pot per Section 5.7.

5.1.19 **CHECK** in field or on HMI the seal pot level, using indicator listed below for appropriate exhauster train, is greater than 30%.

Exhauster Train	EIN-HMI	EIN-Field
A-Train	AN241-VTP-LI-380	AN241-VTP-SG-380
B-Train	AN241-VTP-LI-480	AN241-VTP-SG-480

5.1.19.1 **IF** level is not within range, **FILL/REFILL** seal pot to appropriate level per Section 5.7.

5.1.20 **CHECK** in field or on HMI, the glycol level, using indicator listed below for appropriate exhauster train, is between 55% - 75%.

Exhauster Train	EIN-HMI	EIN-Field
A-Train	AN241-VTP-LI-370	AN241-VTP-SG-370
B-Train	AN241-VTP-LI-470	AN241-VTP-SG-470

5.1.20.1 **IF** level is not within range, **FILL/REFILL** glycol tank to appropriate level per Section 5.6.

5.1.21 **START** glycol recirc pump listed below for appropriate exhauster train.

Exhauster Train	EIN-HMI
A-Train	AN241-VTP-P-371
B-Train	AN241-VTP-P-471

5.1.22 **ENSURE** Train Outlet AN241-VTP-MOV-361[461] is OPEN.

5.1 Start Up Primary Ventilation System (Cont.)

5.1.23 **START** glycol heater listed below for appropriate exhauster train **AND**

WAIT for associated glycol temperature indicator to reach approximately 110 °F.

Exhauster Train	EIN
A-Train	AN241-VTP-HTR-372
	AN241-VTP-TI-373
B-Train	AN241-VTP-HTR-472
	AN241-VTP-TI-473

NOTE - Active interlocks will contain "ILock" in the "Description" field and "On" in the "Status" field.

5.1.24 **CHECK** no active interlocks are present on HMI alarms page (F5).

5.1.24.1 **IF** active interlocks are present, **RESPOND** per ARP-T-221-EXH(A) or ARP-T-221-EXH(B) as applicable.

5.1.25 **CHECK** [Current Mode] is "Ready".

5.1.25.1 **IF** not in "Ready" mode, **CLICK** on button **AND**

SELECT "Ready" mode.

5.1.26 **WHEN** directed by Shift Manager/OE,

OR

IF ambient temperature less than 50 °F **AND** previously operating fan has been shut down for greater than 1 hour,

OPEN fan housing drain valve AN241-VTP-V-369[469] for the fan being started for two minutes to ensure any rainwater or condensation collected in the fan housing is drained.

5.1.26.1 **CLOSE** fan housing drain valve AN241-VTP-V-369[469] for the fan being started.

5.1.27 **CHECK** [Hi Flow Mode] is "OFF".

5.1.28 **CHECK** [System Mode] is "AUTO".

5.1.29 **ENSURE** [Fan Control] is in "AUTO" mode.

5.1 Start Up Primary Ventilation System (Cont.)

5.1.30 **IF** exhauster will be run in CAM Bypass, **GO TO** Section 5.11.

5.1.31 **IF** exhauster will NOT be run in CAM Bypass, **ENSURE** Primary Exhaust CAM, AN241-VTP-RT-554/654, Beta/Gamma Monitor is ON.

WARNING

Switching or starting fans that have been down for an extended period, may cause condensate to be blown out of the stack. Personnel notifications need to be done to clear the immediate area PRIOR to switching or startup of the system to avoid potential personnel contamination.

5.1.32 **CHECK** all non-essential personnel have cleared the immediate area.

5.1.33 **SHUT DOWN** operating primary fan by selecting "Shutdown Exhauster" or applicable Exhauster Process Detail screen.

NOTE - At fan startup, some interlocks and alarms will be suppressed for approximately two minutes to allow exhauster to stabilize.

5.1.34 **SELECT** [Startup Exhauster] for appropriate train and start fan.

5.1.35 **CONFIRM** applicable fan starts.

5.1.36 **IF** fan does not start, **NOTIFY** Shift Manager **AND**

PROCEED as directed.

NOTE - Interlocks to become enabled are:

- Interlock 1: Exhauster LO-LO- Flow
- Interlock 3: HEPA Filter LO-LO dP
- Interlock 12: EMS Failure
- Interlock 30: CAM HI-HI Radiation.

5.1.37 **AFTER** fan starts, **WAIT** approximately two minutes for system alarms and interlocks to become ENABLED.

5.1 Start Up Primary Ventilation System (Cont.)

5.1.38 **CHECK** glycol level on HMI using indicator for appropriate exhauster train listed below **AND**

IF level dropped below 55%, **FILL/RE-FILL** glycol tank per Section 5.6 to level between 55% - 75%.

Exhauster Train	EIN
A-Train	AN241-VTP-LI-370
B-Train	AN241-VTP-LI-470

5.1.39 **ACKNOWLEDGE** all alarms on HMI alarms page (F5).

NOTE - Heater Differential Temperature Alarm may keep returning for a few minutes.

5.1.40 **IF** alarms return after acknowledging them, **NOTIFY** Shift Manager.

5.1.41 **CHECK** all tank pressures are between -3.5 and -0.7 in. WG, indicated on HMI screen "AN Tank Farm".

5.1.42 **NOTIFY** Shift Manager, and TMACS that exhauster EF-009 (A-Train) OR EF-010 (B-Train) has been started.

5.1.43 **AFTER** primary exhaust train is running **AND** equipment dPs and tank pressures have stabilized, **RECORD** AN tank pressure and primary ventilation data per TF-OR-DR-AN.

5.1.43.1 **REPORT** to Shift Manager any indications out of range per TF-OR-DR-AN.

5.1.44 **IF** Steps 5.1.18 through 5.1.43 were performed to connect temporary power per Step 5.9.3 **GO TO** Step 5.9.4.

5.1.45 **CHECK** CAM/Record Sampler inspection per TF-OPS-005 and TF-OPS-028 is completed satisfactorily for train that has been started.

5.1.46 **IF** previously operating primary fan was shut down, **GO TO** Step 5.3.29.

5.2 Stack Flow Adjustment

NOTE - Adjustment of stack flow may be necessary for support of quarterly ANSI N13.1-1999 Compliance maintenance activities.

5.2.1 **IF** directed by Shift Manager, **ADJUST** stack flow as follows:

5.2.1.1 **LOG IN** with OPERATOR ACCESS.

5.2.1.2 **SELECT** [Fan Control].

5.2.1.3 **SELECT** [Setpoints], **THEN** [Adjust].

5.2.1.4 **ADJUST** stack flow value as directed by Shift Manager **AND**

RECORD stack flow value on Comment Page.

5.3 Routine Switching of Exhaust Fans and Maintenance Activities

NOTE - Section 4.3 pre-requisites do not apply to weekly routine switching of the exhaust fans, or for switching of fans to support maintenance if directed by Shift Manager/OE.

5.3.1 **NOTIFY** Shift Manager, and TMACS that primary exhaust trains are about to be switched or intermittently shutdown in support of maintenance activities.

5.3.2 **CHECK** de-entrainer seal pot level LI-170 (located on de-entrainer HMI screen or in field) is above 40%.

5.3.2.1 **IF** level is not within range, **NOTIFY** Shift Manager **AND**

AS directed by Shift Manager, **FILL/RE-FILL** de-entrainer seal pot per Section 5.7.

5.3.3 **CHECK** in field or on HMI the seal pot level, using indicator listed below for appropriate exhauster train, is greater than 30%.

Exhauster Train	EIN-HMI	EIN-Field
A-Train	AN241-VTP-LI-380	AN241-VTP-SG-380
B-Train	AN241-VTP-LI-480	AN241-VTP-SG-480

5.3.3.1 **IF** level is not within range, **FILL/REFILL** seal pot to appropriate level per Section 5.7.

5.3.4 **CHECK** in field or on HMI, the glycol level, using indicator listed below for appropriate exhauster train, is between 55% - 75%.

Exhauster Train	EIN-HMI	EIN-Field
A-Train	AN241-VTP-LI-370	AN241-VTP-SG-370
B-Train	AN241-VTP-LI-470	AN241-VTP-SG-470

5.3.4.1 **IF** level is not within range, **FILL/REFILL** glycol tank to appropriate level per Section 5.6.

5.3 Routine Switching of Exhaust Fans and Maintenance Activities (Cont.)

5.3.5 **START** glycol recirc pump listed below for appropriate exhauster train.

Exhauster Train	EIN
A-Train	AN241-VTP-P-371
B-Train	AN241-VTP-P-471

5.3.6 **ENSURE** Train Outlet AN241-VTP-MOV-361/461 is OPEN.

5.3.7 **START** glycol heater listed below for appropriate exhauster train **AND**

WAIT for associated glycol temperature indicator to reach approximately 110°F.

Exhauster Train	EIN
A-Train	AN241-VTP-HTR-372
	AN241-VTP-TI-373
B-Train	AN241-VTP-HTR-472
	AN241-VTP-TI-473

NOTE - Active interlocks will contain "ILock" in the "Description" field and "On" in the "Status" field.

5.3.8 **CHECK** no active interlocks are present on HMI alarms page (F5).

5.3.8.1 **IF** active interlocks are present, **RESPOND** per ARP-T-221-EXH(A) or ARP-T-221-EXH(B) as applicable.

5.3.9 **CHECK** [Current Mode] is "Ready".

5.3.9.1 **IF** not in "Ready" mode, **CLICK** on button **AND**

SELECT "Ready" mode.

5.3 Routine Switching of Exhaust Fans and Maintenance Activities (Cont.)

5.3.10 **WHEN** directed by Shift Manager/OE,

OR

IF ambient temperature less than 50 °F **AND** previously operating fan has been shutdown for greater than 1 hour,

OPEN fan housing drain valve AN241-VTP-V-369/469 for the fan being started for two minutes to ensure any rainwater or condensation collected in the fan housing is drained.

5.3.10.1 **CLOSE** fan housing drain valve AN241-VTP-V-369/469 for the fan being started.

5.3.11 **CHECK** [Hi Flow Mode] is "OFF".

5.3.12 **CHECK** [System Mode] is "AUTO".

5.3.13 **ENSURE** [Fan Control] is in "AUTO" mode.

5.3.14 **IF** exhauster will be run in CAM Bypass, **AS** directed by Shift Manager, **INSERT AND TURN** CAM interlock key **AND**

PUSH CAM Bypass button for appropriate exhauster train listed below.

Exhauster Train	EIN
A-Train	AN241-VTP-PB-554
B-Train	AN241-VTP-PB-654

5.3.15 **IF** exhauster will NOT be run in CAM Bypass, **ENSURE** Primary Exhaust CAM, AN241-VTP-RT-554/654, Beta/Gamma Monitor is ON.

WARNING

Switching or starting fans that have been down for an extended period, may cause condensate to be blown out of the stack. Personnel notifications need to be done to clear the immediate area PRIOR to switching or startup of the system to avoid potential personnel contamination.

5.3.16 **CHECK** all non-essential personnel have cleared the immediate area.

5.3 Routine Switching of Exhaust Fans and Maintenance Activities (Cont.)

5.3.17 **SHUT DOWN** operating primary fan by selecting "Shutdown Exhauster" on applicable Exhauster Process Detail screen.

NOTE - At fan startup, some interlocks and alarms will be suppressed for approximately two minutes to allow exhauster to stabilize.

5.3.18 **SELECT** [Startup Exhauster] for appropriate train and start fan.

5.3.19 **CONFIRM** applicable fan starts.

5.3.20 **IF** fan does not start, **NOTIFY** Shift Manager **AND**

PROCEED as directed.

5.3.21 **AFTER** fan starts, **WAIT** approximately two minutes for alarm interlock to become ENABLED.

5.3.22 **CHECK** glycol level on HMI using indicator for appropriate exhauster train listed below **AND**

IF level dropped below 55%, **FILL/RE-FILL** glycol tank per Section 5.6 to level between 55% - 75%.

Exhauster Train	EIN
A-Train	AN241-VTP-LI-370
B-Train	AN241-VTP-LI-470

5.3.23 **ACKNOWLEDGE** all alarms on HMI alarms page (F5).

NOTE - Heater Differential Temperature Alarm may keep returning for a few minutes.

5.3.24 **IF** alarms return after acknowledging them, **NOTIFY** Shift Manager.

5.3 Routine Switching of Exhaust Fans and Maintenance Activities (Cont.)

5.3.25 **CHECK** all tank pressures are between -3.5 and -0.7 in. WG, indicated on HMI screen "AN Tank Farm".

5.3.26 **NOTIFY** Shift Manager and TMACS that exhauster EF-009 (A-Train) OR EF-010 (B-Train) has been started.

5.3.27 **AFTER** primary exhaust train is running **AND** equipment dPs and tank pressures have stabilized, **RECORD** AN tank pressure and primary ventilation data per TF-OR-DR-AN.

5.3.27.1 **REPORT** to Shift Manager any indications out of range per TF-OR-DR-AN.

5.3.28 **CHECK** CAM/Record Sampler inspection per TF-OPS-005 and TF-OPS-028 is completed satisfactorily for train that has been started.

5.3.29 **STOP** associated glycol heater and glycol recirc pump for shutdown train per table below.

Exhauster Train	EIN
A-Train	AN241-VTP-HTR-372 (glycol heater)
	AN241-VTP-P-371 (glycol recirc pump)
B-Train	AN241-VTP-HTR-472 (glycol heater)
	AN241-VTP-P-471 (glycol recirc pump)

5.3.30 **SELECT** [Shutdown Status] on applicable Exhauster Process Detail screen.

5.3.30.1 **CHECK** all displayed conditions are lit gray, red, or yellow.

5.3.31 **NOTIFY** Shift Manager and TMACS of fan switch and specify which exhaust fan, identified from table below, has been started and which fan has been shut down.

Exhauster Train	EIN
A-Train	AN241-VTP- EF-009
B-Train	AN241-VTP- EF-010

5.4 Short Term Shut Down of A or B Train Primary Ventilation

5.4.1 **NOTIFY** TMACS exhauster is about to be shut down, EF-009 (A-Train) or EF-010 (B-Train), as appropriate.

5.4.2 **CHECK** Shift Manager has notified Environmental exhaust fans will be shut down during performance of this activity.

5.4.3 **NOTIFY** Shift Manager primary tank ventilation train will be shut down.

5.4.4 **SHUT DOWN** operating primary train by selecting [Shutdown Exhauster] from Exhauster Process Detail screen.

5.4.5 **STOP** appropriate glycol heater and glycol recirc pump identified below:

Exhauster Train	EIN
A-Train	AN241-VTP-HTR-372 (glycol heater) AN241-VTP-P-371 (glycol recirc pump)
B-Train	AN241-VTP-HTR-472 (glycol heater) AN241-VTP-P-471 (glycol recirc pump)

5.4.6 **SELECT** [Shutdown Status] on Exhauster Process Detail screen.

5.4.6.1 **CHECK** all displayed conditions are lit gray or red.

5.4.7 **NOTIFY** Shift Manager and TMACS which exhauster has been shut down, EF-009 (A-Train) or EF-010 (B-Train), as appropriate.

5.4.8 **IF** connecting temporary power source to shutdown exhaust train **GO TO** Section 5.9.

5.5 Re-Start After Short Term Shutdown of Primary Ventilation

NOTE - The intent of this section is to allow re-start of primary ventilation if system has not exceeded inoperability time limit established by Shift Manager.

5.5.1 **NOTIFY** Shift Manager and TMACS of **RE-START** of AN-Farm Primary Ventilation System.

5.5.2 **WHEN DIRECTED** by Shift Manager/OE, **START** Primary ventilation as follows:

5.5.2.1 **ESTABLISH** either A or B train to be placed in service.

Check
(✓)

_____ A-Train

_____ B-Train

5.5.2.2 **CHECK** desired De-Entrainer is valved in and ready for operation per Steps 5.1.12 through 5.1.14.

5.5.3 **PERFORM** Steps 5.1.18 through 5.1.43 to re-start selected primary exhaust train.

5.6 Glycol Tank Filling and Draining

NOTE - Glycol Pump control, glycol heater, and glycol gauges are displayed on Exhauster Process Detail HMI screens.

5.6.1 **IF** glycol level is above 75%, **GO TO** Step 5.6.7 for draining.

5.6.2 **CHECK** plugs in glycol drain and vent valves identified below are tight.

Exhauster Train	EIN
A-Train	AN241-VTP-V-370 AN241-VTP-V-375
B-Train	AN241-VTP-V-470 AN241-VTP-V-475

5.6.3 **POSITION** glycol valves as indicated below for appropriate train **AND**

INITIAL appropriate block as each valve is verified or positioned.

A-Train			B-Train		
Valves	Position	Initial	Valves	Position	Initial
V-370	CLOSED		V-470	CLOSED	
V-371	OPEN		V-471	OPEN	
V-372	OPEN		V-472	OPEN	
V-373	OPEN		V-473	OPEN	
V-374	OPEN		V-474	OPEN	
V-375	CLOSED		V-475	CLOSED	
V-376	OPEN		V-476	OPEN	
V-377	CLOSED		V-477	CLOSED	

5.6.4 **SLOWLY FILL** appropriate glycol reservoir tank (AN241-VTP-TK-370 for A-Train OR AN241-VTP-TK-470 for B-Train) with 50/50 solution of water and propylene glycol until level is 55% to 65%.

5.6.4.1 **IF** required, **ADD** green food color until a green shade is noticed in sightglass.

5.6.5 **IF** glycol level is 55% - 75%, **RETURN** to applicable Section.

5.6.6 **IF** glycol level is above 75%, **PROCEED** to drain fluid as needed.

5.6 Glycol Tank Filling and Draining (Cont.)

Partial Drain

5.6.7 **STOP** applicable glycol heater identified below, as required.

Exhauster Train	EIN
A-Train	AN241-VTP-HTR-372
B-Train	AN241-VTP-HTR-472

5.6.8 **WAIT** for glycol temperature to fall below 100°F.

Exhauster Train	EIN
A-Train	AN241-VTP-TI-373
B-Train	AN241-VTP-TI-473

5.6.9 **STOP** applicable glycol recirc pump identified below, as required.

Exhauster Train	EIN
A-Train	AN241-VTP-P-371
B-Train	AN241-VTP-P-471

5.6.10 **POSITION** appropriate drain valve identified below to CLOSED.

Exhauster Train	EIN
A-Train	AN241-VTP-V-370
B-Train	AN241-VTP-V-470

5.6.11 **REMOVE** drain plug from appropriate drain valve identified in table above located under associated glycol reservoir tank **AND**

CONNECT drain hose routed to drain container.

5.6 Glycol Tank Filling and Draining (Cont.)

NOTE - Drain valves AN241-VTP-V-370 and AN241-VTP-V-470 are 90° ball valves normally fully open or closed. For draining purposes, it may be opened partially to throttle flow of the solution being drained.

5.6.12 **OPEN** appropriate glycol drain valve identified below.

Exhauster Train	EIN
A-Train	AN241-VTP-V-370
B-Train	AN241-VTP-V-470

5.6.13 **WHEN** desired amount of glycol solution has drained, **CLOSE** associated drain valve opened in Step 5.6.12 above.

5.6.14 **DISCONNECT** drain hose, as applicable **AND**

INSTALL glycol drain plug removed in Step 5.6.11 in appropriate drain valve.

5.6.15 **IF** glycol level drops below 40%, **PERFORM** the following:

5.6.15.1 **OPEN** the following associated disconnect switches/breakers:

- AN241-VTP-DS-372 for A-Train or AN241- VTP-DS-472 for B-Train Heater Disconnect
- MPZ-7 glycol recirc pump disconnect.

5.6.15.2 **PROCEED** as directed by Shift Manager/OE.

5.6.16 **WHEN** glycol level is 55% - 75%, **RETURN** to applicable section.

5.7 Seal Pot Filling

NOTE - De-Entrainer seal pot is filled from A-Train or B-Train seal pot overflow.

5.7.1 **REQUEST** an HPT to perform pre-job survey of fill valve area. (TFC-ESHQ-ENV-STD-06)

5.7.2 **POSITION** appropriate overflow valve identified below to OPEN.

Exhauster Train	EIN
A-Train	AN241-VTP-V-381
B-Train	AN241-VTP-V-481

5.7.3 **REMOVE** plug from appropriate fill valve identified below.

Exhauster Train	EIN
A-Train	AN241-VTP-V-380
B-Train	AN241-VTP-V-480

5.7.4 **ATTACH** funnel or fill hose to fill valve, as required.

5.7.5 **OPEN** fill valve identified in Step 5.7.3.

NOTE - The HMI will take a few seconds to register volume changes in LI-170. Approximately ½ gallon of water is needed to raise level approximately 5% (See Step 2.2.5 in Section 2.2, General Information).

5.7.6 **SLOWLY ADD** water to seal pot.

5.7.7 **WHEN** the exhauster seal pot level is approximately 50% as indicated on sight glass SG-380 [SG-480], **STOP** adding water,

OR

CONTINUE filling to increase de-entrainer seal pot level LI-170.

5.7.8 **CLOSE** appropriate fill valve opened in Step 5.7.5.

5.7.9 **REMOVE** funnel or fill hose, as applicable.

5.7.10 **REINSTALL** seal pot plug in fill valve identified from Step 5.7.3.

5.7.11 **REQUEST** an HPT to perform post-job survey of fill valve area. (TFC-ESHQ-ENV-STD-06)

5.8 Seal Pot Filling SP-101 & SP-102 (AN inactive VTP Seal Pots)

5.8.1 **IF** directed by Shift Manager/OE, **ADD** 1 to 2 gallons of water to seal pots AN241-VTP-SP-101 and AN241-VTP-SP-102 (west side VAC pad) as follows.

5.8.1.1 **ENSURE** tank 101-AN vapor space pressure is less than - 0.5".

5.8.1.2 **REQUEST** HPT to perform pre-job survey of fill valve area.

5.8.1.3 **REMOVE** stopper or cap as necessary.

5.8.1.4 **OPEN** funnel valves V-129 (SP-102) or V-130 (SP-101) **AND**

ADD water.

5.8.1.5 **AFTER** water has drained into seal pot, **ENSURE** V-129 and V-130 funnel valves are closed.

5.8.1.6 **INSTALL** stopper or cap as necessary.

5.8.1.7 **REQUEST** HPT to perform post-job survey of fill valve area.

5.9 Temporary Power

Shutdown/Connect Temporary Power/Operate Exhaust Train

NOTE - This section is intended to be used when conditions in the field dictate an alternate temporary power supply (i.e., to exhaust fan motor only) is needed, to keep the primary ventilation system running during a planned AN-Farm electrical maintenance outage.

- This section is used in conjunction with a temporary Engineering Change Notification and/or other approved documentation (e.g., work package), that identifies the field configuration power supply changes. Because this section deviates from the normal routine of operating the ventilation system, a work package will be used to address additional hazards and field isolation points.

5.9.1 **CONFIRM** appropriate exhauster train has been shutdown in accordance with Section 5.4.

5.9.2 **VERIFY** temporary power supply has been connected to appropriate exhaust train in accordance with an approved work package.

_____ / _____ / _____

Signature SOM/OE | Print | Date

5.9.3 **RESTART** exhaust train on temporary power in accordance with Steps 5.1.18 through 5.1.43.

Shutdown Exhaust Train and Disconnect Temporary Power Source

5.9.4 **WHEN** directed by Shift Manager/OE, **SHUTDOWN** appropriate exhaust train in accordance with Section 5.4.

5.9.5 **VERIFY** temporary power supply has been disconnected from appropriate exhaust train in accordance with an approved work package.

_____ / _____ / _____

Signature SOM/OE | Print | Date

5.9.6 **RESTART** exhaust train on normal power in accordance with Steps 5.1.18 through 5.1.43.

5.10 Operate Primary Tank Inlet Stations

Check Done ✓

NOTE - Steps within Section 5.10 may be performed in any logical order or omitted at Shift Manager/OE direction, after verification of applicable prerequisites.

- The bypass line ball valves listed in Table 8 shall remain CLOSED at all times unless otherwise specified by the ventilation engineer.

5.10.1 **VERIFY** Shift Manager/OE has identified specific primary tank inlet station(s) that will be involved in current activity, and identified restrictions and requirements.

_____ Tank Primary Inlet Station(s)

_____ / _____ / _____

Signature Print Date
Shift Manager /OE

5.10.2 **ISOLATE** identified primary tank inlet station as follows:

_____ 5.10.2.1 **CLOSE** associated isolation butterfly valve(s) (see Figure 3 and Figure 4) referenced in Table 8.

_____ 5.10.2.2 **MAINTAIN** tank vacuums between -0.7 to -3.5 in. W.G., by monitoring either the local tank pressure transmitter or the HMI. **(OSD-T-151-00007)**

NOTE - When waste disturbing activities are in progress, ADJUSTING tape on central pump pit is PROHIBITED.

_____ 5.10.2.3 **IF DIRECTED** by Shift Manager/OE, **CHECK** no waste disturbing activities are in progress **AND**

ADJUST tape on central pump pit, as necessary.

5.10 Operate Primary Tank Inlet Stations (Cont.)

Check Done ✓

5.10.3 **INSPECT AND CLEAN** air flow controller as follows:

_____ 5.10.3.1 **CHECK** inlet station is ISOLATED per Step 5.10.2.

_____ 5.10.3.2 **REMOVE** filter screens (with captured filter media).

_____ 5.10.3.3 **PERFORM** the following actions in order:

- Inspection & cleaning
- Part change out as required (e.g., orifice plate).

5.10.4 **IF** required, **REMOVE** port controller as follows:

_____ 5.10.4.1 **REMOVE** ¼" stop bolts from air flow controller housing **AND**

GENTLY GUIDE port controller down and out of housing (see Figure 6).

_____ 5.10.4.2 **PERFORM** required cleaning or work on flow controller.

_____ 5.10.4.3 **GUIDE** port controller gently up into air flow controller housing, **INSTALL** stop bolts hand tight **AND**

GENTLY GUIDE port controller down so it rests on stop bolts.

_____ 5.10.4.4 **INSTALL** filter screens (with captured filter media).

5.10 Operate Primary Tank Inlet Stations (Cont.)

Check
Done ✓

5.10.5 **PLACE** a primary tank inlet station on line as follows:

_____ 5.10.5.1 **OPEN** appropriate tank inlet station isolation butterfly valve per Table 8 (See Figure 4).

_____ 5.10.5.2 **CONFIRM** air flow controller operation by looking through view port on flow controller.

_____ 5.10.5.3 **CHECK** no dirt, debris, or ice is located inside of flow controller.

_____ 5.10.5.4 **CHECK** port controller is levitating and exhibits a slight buoyant, floating, or rocking motion (see Figure 5).

_____ 5.10.5.5 **IF** no motion is observed, **CYCLE** appropriate isolation butterfly valve identified in Table 8 **AND**

CONFIRM port controller drops freely to its resting position and resumes levitation.

_____ 5.10.5.6 **MAINTAIN** tank vacuums between -0.7 to -3.5 in. WG, by MONITORING either local tank pressure transmitters or HMI. **(OSD-T-151-00007)**

_____ 5.10.5.7 **IF DIRECTED** by Shift Manager/OE, **CHECK** no waste disturbing activities are in progress **AND**

CORRECT tape on central pump pit that was adjusted, as necessary.

5.11 Place Exhauster in CAM Bypass Mode

NOTE - Exhauster should be operated in CAM BY-PASS mode only when performing maintenance and/or RadCon routines.

- Running system in CAM bypass requires notification of Environmental (See Steps 3.4.5 to 3.4.6 for requirements).

5.11.1 **OBTAIN** permission from Shift Manager/OE to operate running exhauster in CAM Bypass Mode.

5.11.2 **LOG** onto HMI that is being placed in CAM Bypass Mode.

5.11.3 **CLICK** on AMS-4 button.

NOTE - The "CAM Bypass" message will flash on the HMI screen when in the Bypass mode.

5.11.4 **INSERT AND TURN** CAM interlock key **AND**

PUSH appropriate CAM Bypass button as listed below:

Train	Bypass button
A-Train	AN241-VTP-PB-554
B-Train	AN241-VTP-PB-654

5.11.5 **REMOVE** CAM interlock key.

5.12 Remove Exhauster from CAM Bypass Mode

5.12.1 **IF** not logged in, **LOG** onto any HMI that interfaces with exhauster to be taken out of CAM Bypass mode.

5.12.2 **GO TO** appropriate stack monitor screen.

5.12.3 **CLICK** on AMS-4 button.

NOTE - The "CAM Bypass" message will flash on the HMI screen when in the Bypass mode.

5.12.4 **CLICK** on "Clear CAM Bypass" box to take exhauster out of CAM Bypass mode.

5.12.5 **NOTIFY** Shift Manager/OE exhauster has been removed from CAM Bypass mode.

5.13 Manually Switch Operating Sample Pumps

5.13.1 **IF** not already logged in, **LOGIN** to an HMI.

5.13.2 **PRESS** F2 at the HMI to bring up the System Navigation screen.

NOTE - The next step takes you to the Stack Monitoring screen where the sampling pumps are controlled.

5.13.3 **CLICK** on the Exhauster A Stack Monitor or the Exhauster B Stack monitor button for the exhauster running.

NOTE - The next step will enable sample pump shutdown.

5.13.4 **GO** to SELECT mode **AND**

CHANGE from AUTO mode to MANUAL mode

5.13.5 **TURN** OFF the operating sample pump.

5.13.6 **TURN** ON the desired sample pump **AND**

WAIT for flow to stabilize.

NOTE - The next step will activate the alarms.

5.13.7 **GO** to SELECT mode **AND**

CHANGE from MANUAL mode to AUTO mode.

5.13.8 **CONFIRM** desired sample pump is operating.

5.13.9 **CONFIRM** flow rates for Record Sampler and CAM are correct.

5.14 Records

The following records are generated during the performance of this procedure:

5.14.1 **VERIFY** the complete records have been submitted to Operations for record retention.

_____ / _____ / _____
Signature Print Date

- Steps 4.3.2, Step 4.3.3 and associated Table (2 pages), 4.3.4, 4.3.5, and 4.3.6
- Steps 5.10.1 and 5.14.1
- Table 1 to Table 6, and Table 8
- Comment Page (If filled in).

The record custodian identified in the Company Level Records, Retention, and Disposition Schedules (RIDS) is responsible for record retention in accordance with TFC-BSM-IRM_DC-C-02.

Table 1 - De-Entrainer Valve Line-Up HMI Valves

DE-ENTRAINER*	VALVE*	DESCRIPTION	POSITION	Initial for HMI Position
Valve Line-up if ONLY using AN241-VTP-DE-005				
DE-005	V-150	Pri Exh Demister 005 Inlet Isolation Valve	OPEN	
	V-153	Pri Exh Demister 005 Outlet Isolation Valve	OPEN	
	V-160	Pri Exh Demister 006 Inlet Isolation Valve	CLOSED	
	V-163	Pri Exh Demister 006 Outlet Isolation Valve	CLOSED	
Valve Line-up if ONLY using AN241-VTP-DE-006				
DE-006	V-150	Pri Exh Demister 005 Inlet Isolation Valve	CLOSED	
	V-153	Pri Exh Demister 005 Outlet Isolation Valve	CLOSED	
	V-160	Pri Exh Demister 006 Inlet Isolation Valve	OPEN	
	V-163	Pri Exh Demister 006 Outlet Isolation Valve	OPEN	
Valve Line-up if using BOTH AN241-VTP-DE-005 and AN241-VTP-DE-006				
DE-005 & DE-006	V-150	Pri Exh Demister 005 Inlet Isolation Valve	OPEN	
	V-153	Pri Exh Demister 005 Outlet Isolation Valve	OPEN	
	V-160	Pri Exh Demister 006 Inlet Isolation Valve	OPEN	
	V-163	Pri Exh Demister 006 Outlet Isolation Valve	OPEN	

*NOTE- Prefix all EINs with AN241-VTP-

Table 2 - De-Entrainer Valve Line-Up Non-HMI Valves

DE-ENTRAINER*	VALVE*	DESCRIPTION	POSITION	Initial
Valve Line-up if ONLY using AN241-VTP-DE-005				
DE-005	V-151	Pri Exh Demister 005 Spray Down Iso Valve	CLOSED	
	V-157	Pri Exh Demister 005 Drain Line Iso Valve	OPEN	
	V-158	Pri Exh Demister 005 Drain Line Iso Valve	OPEN	
	V-190	Pri Exh Demister 005 Drain Line Iso Valve	CLOSED	
	V-154	AN241-VTP-PDIT-152 Hi Side Iso Valve	OPEN	
	V-155	AN241-VTP-PDIT-152 Equalizing Valve	CLOSED	
	V-156	AN241-VTP-PDIT-152 Lo Side Iso Valve	OPEN	
Valve Line-up if ONLY using AN241-VTP-DE-006				
DE-006	V-161	Pri Exh Demister 006 Spray Down Iso Valve	CLOSED	
	V-167	Pri Exh Demister 006 Drain Line Iso Valve	OPEN	
	V-168	Pri Exh Demister 006 Drain Line Iso Valve	OPEN	
	V-191	Pri Exh Demister 006 Drain Line Iso Valve	CLOSED	
	V 164	AN241 VTP PDIT 162 Hi Side Iso Valve	OPEN	
	V 165	AN241 VTP PDIT 162 Equalizing Valve	CLOSED	
	V 166	AN241 VTP PDIT 162 Lo Side Iso Valve	OPEN	
Valve Line-up if using BOTH AN241-VTP-DE-005 and AN241-VTP-DE-006				
DE-005 And DE-006	V-151	Pri Exh Demister 005 Spray Down Iso Valve	CLOSED	
	V-161	Pri Exh Demister 006 Spray Down Iso Valve	CLOSED	
	V-157	Pri Exh Demister 005 Drain Line Iso Valve	OPEN	
	V-158	Pri Exh Demister 005 Drain Line Iso Valve	OPEN	
	V-190	Pri Exh Demister 005 Drain Line Iso Valve	CLOSED	
	V-167	Pri Exh Demister 006 Drain Line Iso Valve	OPEN	
	V-168	Pri Exh Demister 006 Drain Line Iso Valve	OPEN	
	V-191	Pri Exh Demister 006 Drain Line Iso Valve	CLOSED	
	V-171	Pri Exh Seal Pot 170 Vent Line Iso Valve	OPEN	
	V-172	Pri Exh Seal Pot 170 Flush Conn Iso Valve	CLOSED	

*NOTE- Prefix all EINs with AN241-VTP-

Table 3 - Off-Skid Valving

EIN*	Description*	Position	Initials
AN101-WST-V-251	AN101-WST-PDIT-251A Hi Side Iso valve	OPEN	
AN101-WST-V-252	AN101-WST-PDIT-251A Lo Side Iso valve	OPEN	
AN101-WST-V-253	AN101-WST-PDIT-251A Bypass valve	CLOSED	
AN101-WST-V-254	AN101-WST-PDIT-251B Hi Side Iso valve	OPEN	
AN101-WST-V-255	AN101-WST-PDIT-251B Lo Side Iso valve	OPEN	
AN101-WST-V-256	AN101-WST-PDIT-251B Bypass valve	CLOSED	
AN101-WST-V-257	AN101-WST-PDIT-251C Hi Side Iso valve	OPEN	
AN101-WST-V-258	AN101-WST-PDIT-251C Lo Side Iso valve	OPEN	
AN101-WST-V-259	AN101-WST-PDIT-251C Bypass valve	CLOSED	
AN102-WST-V-260	AN102-WST-PDIT-252A Hi Side Iso valve	OPEN	
AN102-WST-V-261	AN102-WST-PDIT-252A Lo Side Iso valve	OPEN	
AN102-WST-V-262	AN102-WST-PDIT-252A Bypass valve	CLOSED	
AN102-WST-V-263	AN102-WST-PDIT-252B Hi Side Iso valve	OPEN	
AN102-WST-V-264	AN102-WST-PDIT-252B Lo Side Iso valve	OPEN	
AN102-WST-V-265	AN102-WST-PDIT-252B Bypass valve	CLOSED	
AN102-WST-V-266	AN102-WST-PDIT-252C Hi Side Iso valve	OPEN	
AN102-WST-V-267	AN102-WST-PDIT-252C Lo Side Iso valve	OPEN	
AN102-WST-V-268	AN102-WST-PDIT-252C Bypass valve	CLOSED	
AN103-WST-V-269	AN103-WST-PDIT-253A Hi Side Iso valve	OPEN	
AN103-WST-V-270	AN103-WST-PDIT-253A Lo Side Iso valve	OPEN	
AN103-WST-V-271	AN103-WST-PDIT-253A Bypass valve	CLOSED	
AN103-WST-V-272	AN103-WST-PDIT-253B Hi Side Iso valve	OPEN	
AN103-WST-V-273	AN103-WST-PDIT-253B Lo Side Iso valve	OPEN	
AN103-WST-V-274	AN103-WST-PDIT-253B Bypass valve	CLOSED	
AN103-WST-V-275	AN103-WST-PDIT-253C Hi Side Iso valve	OPEN	
AN103-WST-V-276	AN103-WST-PDIT-253C Lo Side Iso valve	OPEN	
AN103-WST-V-277	AN103-WST-PDIT-253C Bypass valve	CLOSED	
AN104-WST-V-278	AN104-WST-PDIT-254A Hi Side Iso valve	OPEN	
AN104-WST-V-279	AN104-WST-PDIT-254A Lo Side Iso valve	OPEN	
AN104-WST-V-280	AN104-WST-PDIT-254A Bypass valve	CLOSED	
AN104-WST-V-281	AN104-WST-PDIT-254B Hi Side Iso valve	OPEN	
AN104-WST-V-282	AN104-WST-PDIT-254B Lo Side Iso valve	OPEN	
AN104-WST-V-283	AN104-WST-PDIT-254B Bypass valve	CLOSED	
AN104-WST-V-284	AN104-WST-PDIT-254C Hi Side Iso valve	OPEN	
AN104-WST-V-285	AN104-WST-PDIT-254C Lo Side Iso valve	OPEN	
AN104-WST-V-286	AN104-WST-PDIT-254C Bypass valve	CLOSED	
AN105-WST-V-287	AN105-WST-PDIT-255A Hi Side Iso valve	OPEN	
AN105-WST-V-288	AN105-WST-PDIT-255A Lo Side Iso valve	OPEN	

*NOTE - Full EINs are given in this table.

Continued on Next Page

Table 3 - Off-Skid Valving (Cont.)

EIN*	Description*	Position	Initials
AN105-WST-V-289	AN105-WST-PDIT-255A Bypass valve	CLOSED	
AN105-WST-V-290	AN105-WST-PDIT-255B Hi Side Iso valve	OPEN	
AN105-WST-V-291	AN105-WST-PDIT-255B Lo Side Iso valve	OPEN	
AN105-WST-V-292	AN105-WST-PDIT-255B Bypass valve	CLOSED	
AN105-WST-V-293	AN105-WST-PDIT-255C Hi Side Iso valve	OPEN	
AN105-WST-V-294	AN105-WST-PDIT-255C Lo Side Iso valve	OPEN	
AN105-WST-V-295	AN105-WST-PDIT-255C Bypass valve	CLOSED	
AN106-WST-V-296	AN106-WST-PDIT-256A Hi Side Iso valve	OPEN	
AN106-WST-V-297	AN106-WST-PDIT-256A Lo Side Iso valve	OPEN	
AN106-WST-V-298	AN106-WST-PDIT-256A Bypass valve	CLOSED	
AN106-WST-V-299	AN106-WST-PDIT-256B Hi Side Iso valve	OPEN	
AN106-WST-V-300	AN106-WST-PDIT-256B Lo Side Iso valve	OPEN	
AN106-WST-V-301	AN106-WST-PDIT-256B Bypass valve	CLOSED	
AN106-WST-V-302	AN106-WST-PDIT-256C Hi Side Iso valve	OPEN	
AN106-WST-V-303	AN106-WST-PDIT-256C Lo Side Iso valve	OPEN	
AN106-WST-V-304	AN106-WST-PDIT-256C Bypass valve	CLOSED	
AN107-WST-V-305	AN107-WST-PDIT-257A Hi Side Iso valve	OPEN	
AN107-WST-V-306	AN107-WST-PDIT-257A Lo Side Iso valve	OPEN	
AN107-WST-V-307	AN107-WST-PDIT-257A Bypass valve	CLOSED	
AN107-WST-V-308	AN107-WST-PDIT-257B Hi Side Iso valve	OPEN	
AN107-WST-V-309	AN107-WST-PDIT-257B Lo Side Iso valve	OPEN	
AN107-WST-V-310	AN107-WST-PDIT-257B Bypass valve	CLOSED	
AN107-WST-V-311	AN107-WST-PDIT-257C Hi Side Iso valve	OPEN	
AN107-WST-V-312	AN107-WST-PDIT-257C Lo Side Iso valve	OPEN	
AN107-WST-V-313	AN107-WST-PDIT-257C Bypass valve	CLOSED	
AN241-VTP-V-154	AN241-VTP-PDIT-152 Hi Side Iso Valve	OPEN	
AN241-VTP-V-155	AN241-VTP-PDIT-152 Equalizing Valve	CLOSED	
AN241-VTP-V-156	AN241-VTP-PDIT-152 Lo Side Iso Valve	OPEN	
AN241-VTP-V-164	AN241-VTP-PDIT-162 Hi Side Iso Valve	OPEN	
AN241-VTP-V-165	AN241-VTP-PDIT-162 Equalizing Valve	CLOSED	
AN241-VTP-V-166	AN241-VTP-PDIT-162 Lo Side Iso Valve	OPEN	
AN241-VTP-V-171	Pri Exh Seal Pot 170 Vent Line Iso Valve	OPEN	
AN241-VTP-V-172	Pri Exh Seal Pot 170 Flush Conn Iso Valve	CLOSED	

*NOTE - Full EINs are given in this table.

Table 4 - Initial Exhaust Train Valve Line-Up

(Page 1 of 2)

Description*	A-Train			B-Train		
	EIN*	Position	Initials	EIN	Position	Initials
High Isolation Valve Main Air Stream	MOV-352	CLOSED	N/A	MOV-452	CLOSED	N/A
Low Isolation Valve Main Air Stream	MOV-361	CLOSED	N/A	MOV-461	CLOSED	N/A
PDIT-351[451] Hi Side Isolation Valve	V-351	OPEN		V-451	OPEN	
PDIT-351[451] Lo Side Isolation Valve	V-352	OPEN		V-452	OPEN	
PDIT-351[451] Equalizing Valve	V-353	CLOSED		V-453	CLOSED	
PDIT-354[454] Hi Side Isolation Valve	V-354	OPEN		V-454	OPEN	
PDIT-354[454] Lo Side Isolation Valve	V-355	OPEN		V-455	OPEN	
PDIT-354[454] Equalizing Valve	V-356	CLOSED		V-456	CLOSED	
PDIT-356[456] Hi Side Isolation Valve	V-357	OPEN		V-457	OPEN	
PDIT-356[456] Lo Side Isolation Valve	V-358	OPEN		V-458	OPEN	
PDIT-356[456] Equalizing Valve	V-359	CLOSED		V-459	CLOSED	
PDIT-357[457] Hi Side Isolation Valve	V-360	OPEN		V-460	OPEN	
PDIT-357[457] Lo Side Isolation Valve	V-361	OPEN		V-461	OPEN	
PDIT-357[457] Equalizing Valve	V-362	CLOSED		V-462	CLOSED	
PDIT-358[458] Hi Side Isolation Valve	V-363	OPEN		V-463	OPEN	
PDIT-358[458] Lo Side Isolation Valve	V-364	OPEN		V-464	OPEN	
PDIT-358[458] Equalizing Valve	V-365	CLOSED		V-465	CLOSED	
Seal Pot 380[480] Vent/Fill Valve	V-380	CLOSED		V-480	CLOSED	
Seal Pot 380[480] Gravity Dr Line To AN Tank Farm	V-381	OPEN		V-481	OPEN	
Seal Pot 380[480] Drain Valve	V-382	OPEN		V-482	OPEN	
Seal Pot LT-380[LT-480] Level Drain Valve	V-383	CLOSED		V-483	CLOSED	
Seal Pot LT-380[LT-480] Level Drain Valve	V-384	CLOSED		V-484	CLOSED	
Seal Pot SG-380[SG-480] Sight Glass Drain Valve	V-386	OPEN		V-486	OPEN	
Seal Pot LT-380[LT-480] Level Equalizing Valve	V-387A	CLOSED		V-487A	CLOSED	
Seal Pot LT-380[LT-480] Lo Side Level Isol. Valve	V-387B	OPEN		V-487B	OPEN	
Seal Pot LT-380[LT-480] Hi Side Level Isol. Valve	V-387C	OPEN		V-487C	OPEN	
Exhaust Fan 009[010] Drain Line Isolation Valve	V-369	CLOSED		V-469	CLOSED	
PIT-371[471] Isolation Valve	V-376	OPEN		V-476	OPEN	
PIT-371[471] Cal Port Iso Valve	V-377	CLOSED		V-477	CLOSED	
Record Sample Outlet Iso Valve (Located in ENCL-550 [ENCL-650])	V-553	OPEN		V-653	OPEN	
CAM Sample Outlet Iso Valve (Located in ENCL-550 [ENCL-650])	V-554	OPEN		V-654	OPEN	
Sample Line Condensate Drain Valve (Located below ENCL-550 [ENCL-650])	V-555	CLOSED		V-655	CLOSED	
Sample Pump 564[664] Outlet Iso Valve	V-562	OPEN		V-662	OPEN	
Sample Pump 574[674] Outlet Iso Valve	V-572	OPEN		V-672	OPEN	

*NOTE- Prefix all EINs with AN241-VTP-

(Table 4 **Continued on Next Page**)

Table 4 - Initial Exhaust Train Valve Line-Up (Cont.)

(Page 2 of 2)

Description*	A-Train			B-Train		
	EIN*	Position	Initials	EIN*	Position	Initials
Exh. Stack Flow PDIT-551[651] Hi Side Iso Valve	V-580	OPEN		V-680	OPEN	
Exh. Stack Flow PDIT-551[651] Lo Side Iso Valve	V-581	OPEN		V-681	OPEN	
Exh. Stack Flow PDIT-551[651] Equalizing Valve	V-582	CLOSED		V-682	CLOSED	
Exhaust Stack Instm Hi Side Iso Vlv	V-583	OPEN		V-683	OPEN	
Exhaust Stack Instm Lo Side Iso Vlv	V-584	OPEN		V-684	OPEN	
Exhaust Stack Hi Side Port Iso Vlv	V-585	CLOSED		V-685	CLOSED	
Exhaust Stack Lo Side Port Iso Vlv	V-586	CLOSED		V-686	CLOSED	
Glycol Tank 370[470] Drain Valve	V-370	CLOSED		V-470	CLOSED	
Glycol Loop Recirc Pump Lo Side Isolation Valve	V-371	OPEN		V-471	OPEN	
Glycol Loop Recirc Pump Hi Side Isolation Valve	V-372	OPEN		V-472	OPEN	
Glycol Tank 370[470] Level Glass Hi Side Iso Valve	V-373	OPEN		V-473	OPEN	
Glycol Tank 370[470] Level Glass Lo Side Iso Valve	V-374	OPEN		V-474	OPEN	
Glycol Loop Hi Point Vent Valve	V-375	CLOSED		V-475	CLOSED	

*NOTE- Prefix all EINs with AN241-VTP-

Table 5 - Electrical Line-Up

Description*	A-Train			B-Train		
	EIN*	Position	Initial	EIN*	Position	Initial
480 Volt Main Breaker	BKR-350	CLOSED (ON)		BKR-450	CLOSED (ON)	
VFD Cabinet Power Disconnect	DS-309	CLOSED (ON)		DS-410	CLOSED (ON)	
Glycol heater disconnect	DS-372	CLOSED (ON)		DS-472	CLOSED (ON)	
120 Volt circuit breakers (Located at "Mini Power Zone" DP-351 or DP-451)						
MPZ primary breaker "Main"	BKR-351	CLOSED (ON)		BKR-451	CLOSED (ON)	
MPZ secondary breaker "Secondary Main"	BKR-352 Poles 2,4	CLOSED (ON)		BKR-452 Poles 2,4	CLOSED (ON)	
Exhauster Control Cabinet VTP-ENCL-110[111]	MPZ-1	CLOSED (ON)		MPZ-1	CLOSED (ON)	
Inlet: MOV-352[452] Outlet: MOV-361[461]	MPZ-3	CLOSED (ON)		MPZ-3	CLOSED (ON)	
ENCL-550[650]	MPZ-5	CLOSED (ON)		MPZ-5	CLOSED (ON)	
Sampling and CAM Pumps P-564[664], P-574[674]	MPZ-6/8	CLOSED (ON)		MPZ-6/8	CLOSED (ON)	
Glycol pump P-371[471]	MPZ-7	CLOSED (ON)		MPZ-7	CLOSED (ON)	
Duplex Convenience receptacles	MPZ-9	CLOSED (ON)		MPZ-9	CLOSED (ON)	
Exhauster Control Cabinet ENCL-110[111]	MPZ-10	CLOSED (ON)		MPZ-10	CLOSED (ON)	
Sample Heat Trace/Cabinet ENCL-105	MPZ-11	CLOSED (ON)		MPZ-11	CLOSED (ON)	
Spare	MPZ-12	OPEN (OFF)		MPZ-12	OPEN (OFF)	

*NOTE - Prefix all EINs with AN241-VTP-

Table 6 - Isolation Electrical Table

Description	Train A			Train B		
	EIN	Position	Initial	EIN	Position	Initial
VFD Cabinet Power Disconnect	DS-309	OPEN (OFF)		DS-410	OPEN (OFF)	
Glycol heater disconnect	DS-372	OPEN (OFF)		DS-472	OPEN (OFF)	
CAM (Inside CP-110/111)	RT-554	OFF		RT-654	OFF	
MPZ primary breaker "Main"	BKR-351	OPEN (OFF)		BKR-451	OPEN (OFF)	
MPZ secondary breaker "Secondary Main"	BKR-352 Poles 2,4	OPEN (OFF)		BKR-452 Poles 2,4	OPEN (OFF)	
480 Volt Main Breaker	BKR-350	OPEN (OFF)		BKR-450	OPEN (OFF)	
Main Transfer Switch	MTS-350	Power Source - OFF (center)		MTS-450	Power Source - OFF (center)	

NOTE - Prefix all EINs with AN241-VTP-
- Turn off breakers/disconnects in this order or as directed by Shift Manager.

Table 7 - Inlet System Components

TANK	AIR FLOW CONTROLLER	AIR FLOW CONTROLLER INLET SCREEN dP	AIR FLOW CONTROLLER AND VACUUM BREAKER dP
TK-101-AN	AN101-VTP-FC-201	AN101-VTP-PDI-201	AN101-VTP-PDI-202
TK-102-AN	AN102-VTP-FC-202	AN102-VTP-PDI-205	AN102-VTP-PDI-206
TK-103-AN	AN103-VTP-FC-203	AN103-VTP-PDI-209	AN103-VTP-PDI-210
TK-104-AN	AN104-VTP-FC-204	AN104-VTP-PDI-213	AN104-VTP-PDI-214
TK-105-AN	AN105-VTP-FC-205	AN105-VTP-PDI-217	AN105-VTP-PDI-218
TK-106-AN	AN106-VTP-FC-206	AN106-VTP-PDI-221	AN106-VTP-PDI-222
TK-107-AN	AN107-VTP-FC-207	AN107-VTP-PDI-225	AN107-VTP-PDI-226

TANK	PREFILTER	HEPA FILTER	PREFILTER dP	HEPA FILTER dP
TK-101-AN	AN101-VTP-FLT-201	AN101-VTP-FLT-202	AN101-VTP-PDI-203	AN101-VTP-PDI-204
TK-102-AN	AN102-VTP-FLT-203	AN102-VTP-FLT-204	AN102-VTP-PDI-207	AN102-VTP-PDI-208
TK-103-AN	AN103-VTP-FLT-205	AN103-VTP-FLT-206	AN103-VTP-PDI-211	AN103-VTP-PDI-212
TK-104-AN	AN104-VTP-FLT-207	AN104-VTP-FLT-208	AN104-VTP-PDI-215	AN104-VTP-PDI-216
TK-105-AN	AN105-VTP-FLT-209	AN105-VTP-FLT-210	AN105-VTP-PDI-219	AN105-VTP-PDI-220
TK-106-AN	AN106-VTP-FLT-211	AN106-VTP-FLT-212	AN106-VTP-PDI-223	AN106-VTP-PDI-224
TK-107-AN	AN107-VTP-FLT-213	AN107-VTP-FLT-214	AN107-VTP-PDI-227	AN107-VTP-PDI-228

Table 8 - Inlet System Valves

Tank/Location	Label	Description	Normal Op Position	Initial/ Date	Ind.Verify Init/date
TK-101-AN	AN101-VTP-V-261	3" Bypass Line Ball Valve (Tank Inlet at Riser AN101-WST-RISER-009)	CLOSED		N/A
	AN101-VTP-V-201	Inlet Filter Station 12" Isolation Butterfly Valve (Tank Inlet at Riser AN101-WST-RISER-009)	OPEN		N/A
	AN101-VTP-V-131*	Tank Outlet 12" Butterfly Isolation Valve off Riser AN101-WST-RISER-010	OPEN*	N/A	N/A
	AN101-VTP-V-271**	½ " Remote Sensing Port Isolation Valve (Remote Sensing Line for Vacuum Relief Valve)	OPEN**		
TK-102-AN	AN102-VTP-V-262	3" Bypass Line Ball Valve (Tank Inlet at Riser AN102-WST-RISER-010)	CLOSED		N/A
	AN102-VTP-V-202	Inlet Filter Station 12" Isolation Butterfly Valve (Tank Inlet at Riser AN102-WST-RISER-010)	OPEN		N/A
	AN102-VTP-V-132*	Tank Outlet 12" Butterfly Isolation Valve off Riser AN102-WST-RISER-009	OPEN	N/A	N/A
	AN102-VTP-V-272**	½ " Remote Sensing Port Isolation Valve (Remote Sensing Line for Vacuum Relief Valve)	OPEN**		
TK-103-AN	AN103-VTP-V-263	3" Bypass Line Ball Valve (Tank Inlet at Riser AN103-WST-RISER-009)	CLOSED		N/A
	AN103-VTP-V-203	Inlet Filter Station 12" Isolation Butterfly Valve (Tank Inlet at Riser AN103-WST-RISER-009)	OPEN		N/A
	AN103-VTP-V-133	Exhauster Inlet 12" Butterfly Valve off Riser AN103-WST-RISER-010	OPEN	N/A	N/A
TK-104-AN	AN104-VTP-V-264	3" Bypass Line Ball Valve (Tank Inlet at Riser AN104-WST-RISER-010)	CLOSED		N/A
	AN104-VTP-V-204	Inlet Filter Station 12" Isolation Butterfly Valve (Tank Inlet at Riser AN104-WST-RISER-010)	OPEN		N/A
	AN104-VTP-V-134	Exhauster Inlet 12" Butterfly Valve off Riser AN104-WST-RISER-009	OPEN	N/A	N/A
TK-105-AN	AN105-VTP-V-265	3" Bypass Line Ball Valve (Tank Inlet at Riser AN105-WST-RISER-009)	CLOSED		N/A
	AN105-VTP-V-205	Inlet Filter Station 12" Isolation Butterfly Valve (Tank Inlet at Riser AN105-WST-RISER-009)	OPEN		N/A
	AN105-VTP-V-135	Exhauster Inlet 12" Butterfly Valve off Riser AN105-WST-RISER-010	OPEN	N/A	N/A

NOTE - Inlet filter valves are positioned full open or full closed. They are NOT used to modulate the air flow.

* AN101-VTP-V-131 and AN102-VTP-V-132 are on the tank ventilation outlet side but provide a pathway for the pressure relief system in AN-101 and AN-102 to protect the other AN Farm tanks. These valves also require Shift Manager authorization to close. The V-131 and V-132 valves are not readily accessible and have been validated as OPEN by Work Order WFO-WO-07-0863.

** Shift Managers authorization is required before these valves can be closed due to pressure relief system.

(Continued on Next Page)

Table 8 - Inlet System Valves (Cont.)

Tank/Location	Label	Description	Normal Op Position	Initial/ Date	Ind.Verify Init/date
TK-106-AN	AN106-VTP-V-266	3" Bypass Line Ball Valve (Tank Inlet at Riser AN106-WST-RISER-010)	CLOSED		N/A
	AN106-VTP-V-206	Inlet Filter Station 12" Isolation Butterfly Valve (Tank Inlet at Riser AN106-WST-RISER-010)	OPEN		N/A
	AN106-VTP-V-136	Exhauster Inlet 12" Butterfly Valve off Riser AN106-WST-RISER-009	OPEN	N/A	N/A
TK-107-AN	AN107-VTP-V-267	3" Bypass Line Ball Valve (Tank Inlet at Riser AN107-WST-RISER-021)	CLOSED		N/A
	AN107-VTP-V-207	Inlet Filter Station 12" Isolation Butterfly Valve (Tank Inlet at Riser AN107-WST-RISER-021)	OPEN		N/A
	AN107-VTP-V-137	Exhauster Inlet 12" Butterfly Valve off Riser AN107-WST-RISER-010	OPEN	N/A	N/A
AN241-VTP-VT-M8	AN241-VTP-V-139	12" Butterfly Exhaust Inlet on Exhaust Line VT-M8	OPEN		N/A

NOTE - Inlet filter valves are positioned full open or full closed. They are NOT used to modulate the air flow.

Comment Page

Record Any Comments Encountered During Performance of this Procedure.
Date:

Figure 1 - A-Train (AN241-VTP-EF-009) and B-Train (AN241-VTP-EF-010)

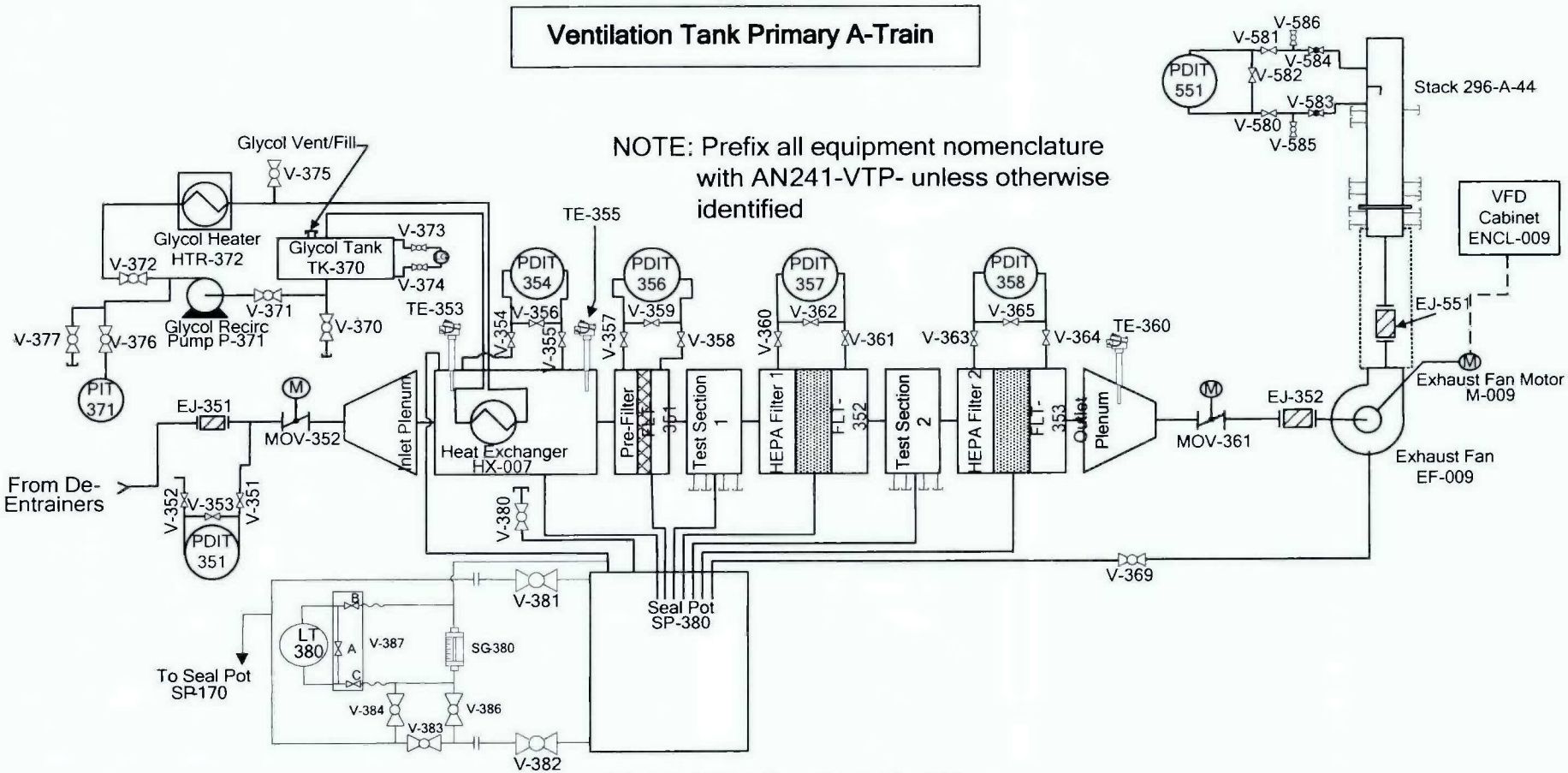

Figure 1 Continued on Next Page

Figure 1 - A-Train (AN241-VTP-EF-009) and B-Train (AN241-VTP-EF-010) (Cont.)

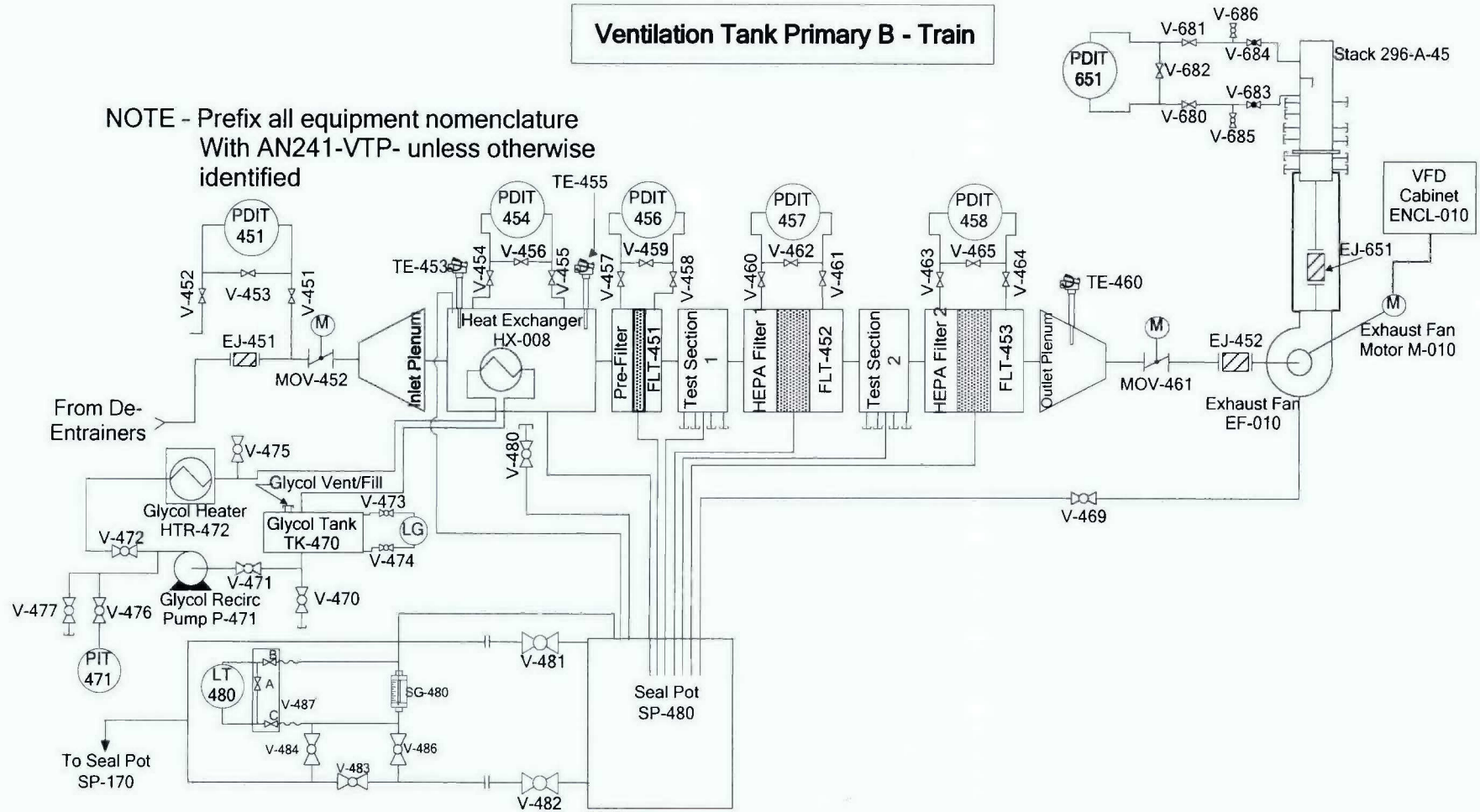

Figure 1 Continued on Next Page

Figure 1 - A-Train (AN241-VTP-EF-009) and B-Train (AN241-VTP-EF-010) (Cont.)

Ventilation De-Entrainer

NOTE: Prefix all equipment nomenclature with AN241-VTP- unless otherwise identified

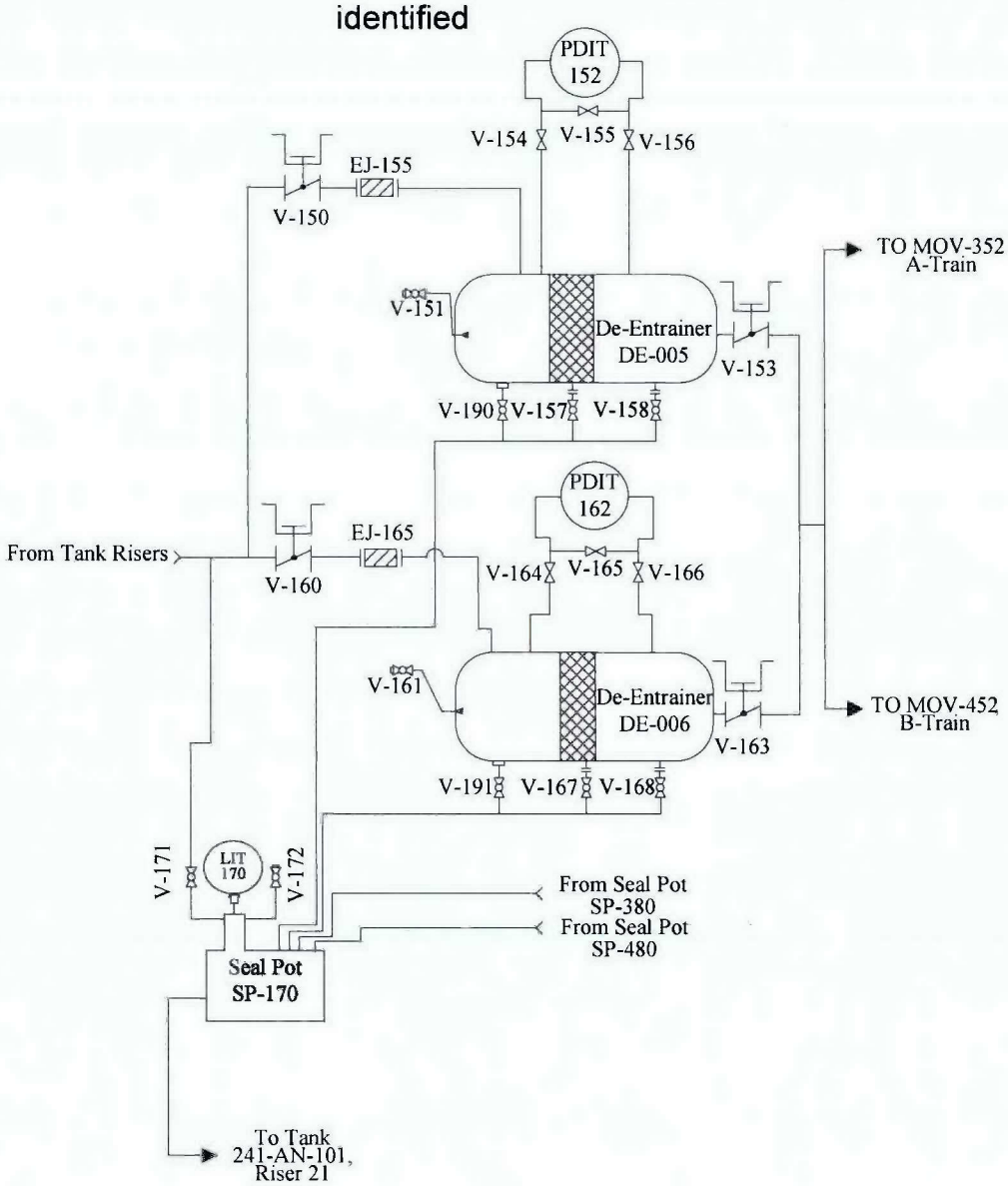

Figure 2 - Stack Sampling System

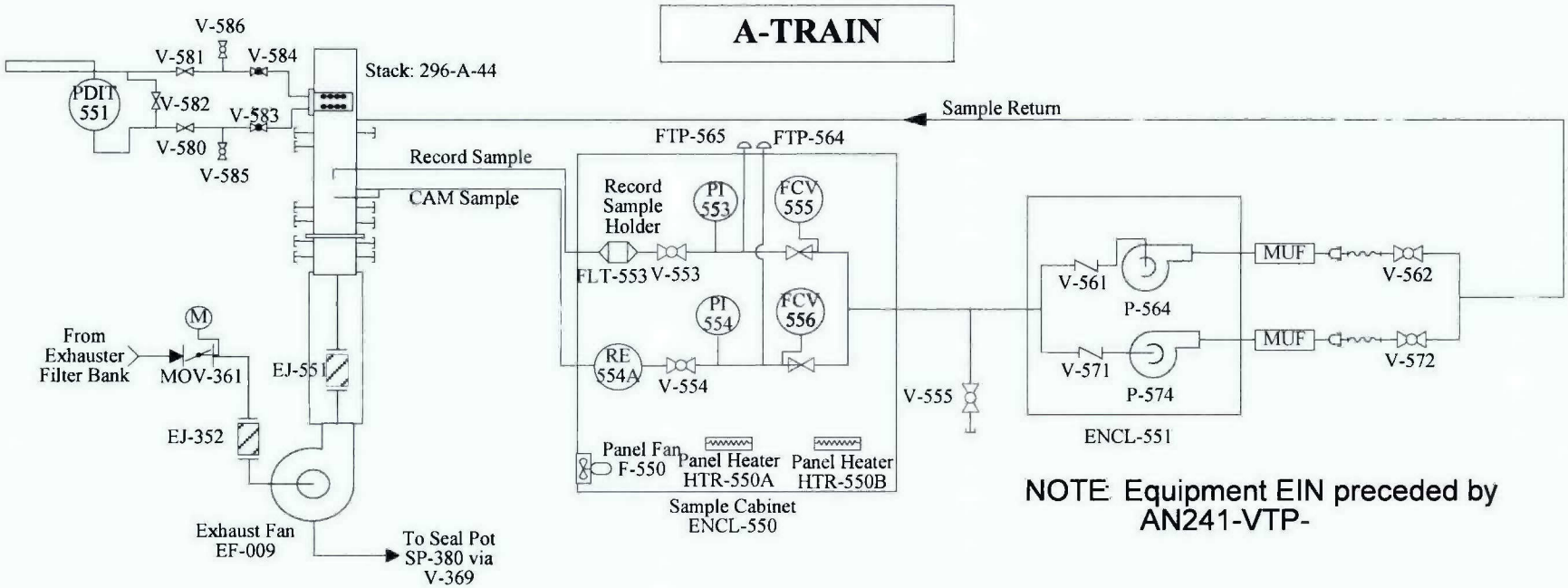

Figure 2 Continued on Next Page

Figure 2 - Stack Sampling System (Cont.)

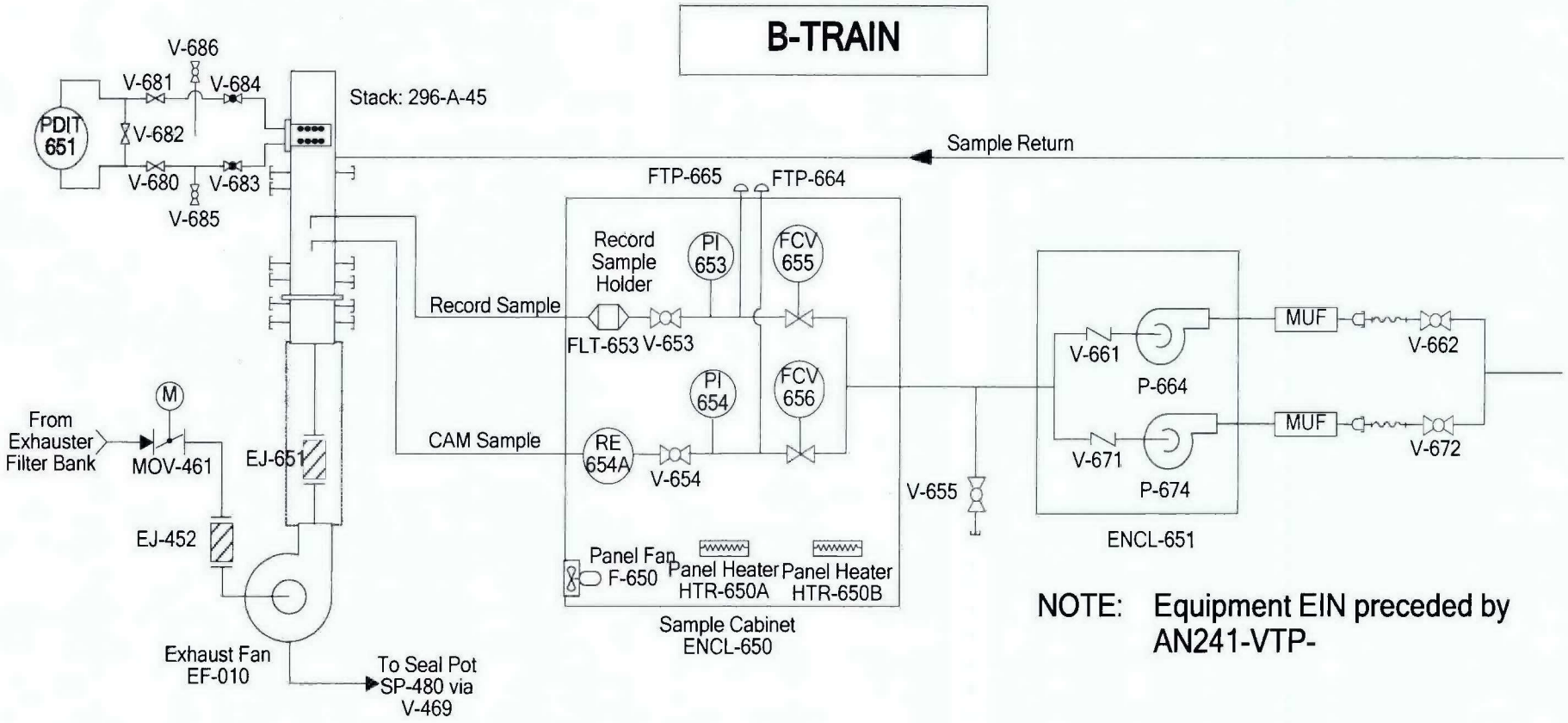

NOTE: Equipment EIN preceded by AN241-VTP-

Figure 3- Tank Air Inlet Station Equipment

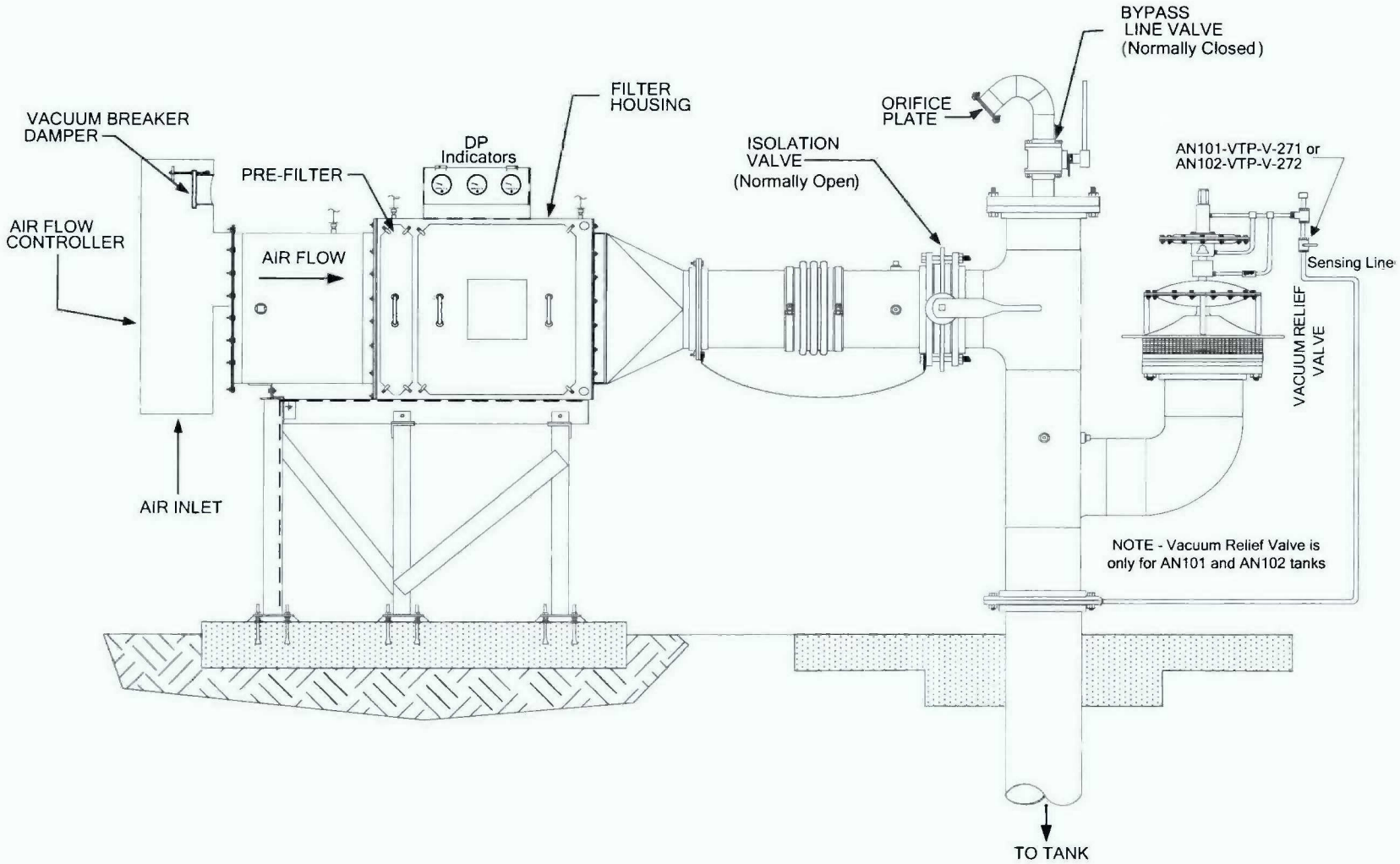

Figure 4- Ventilation Inlet System

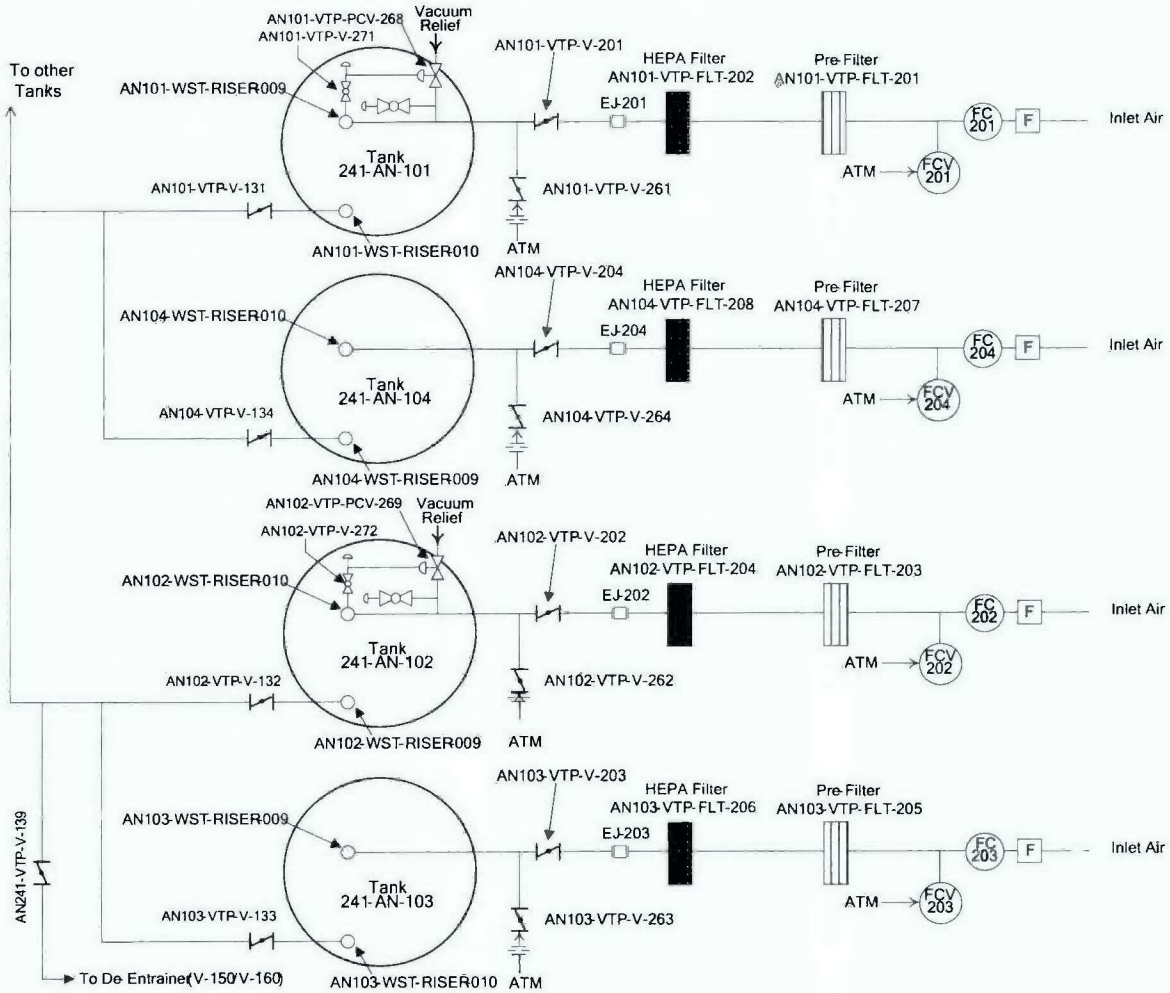

Figure 4- Ventilation Inlet System (Cont.)

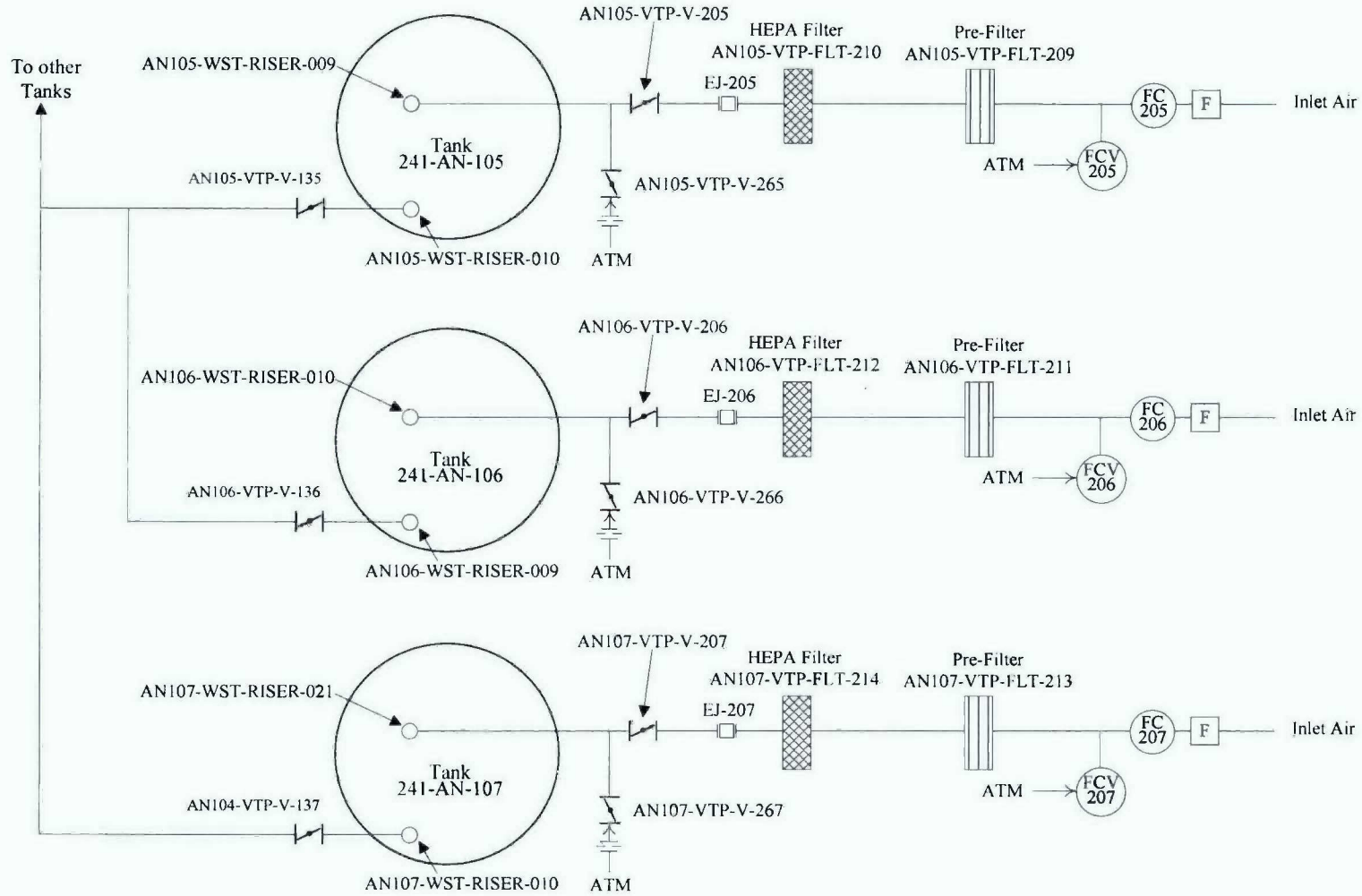

Figure 5 - Air Flow Controller Flow Verification

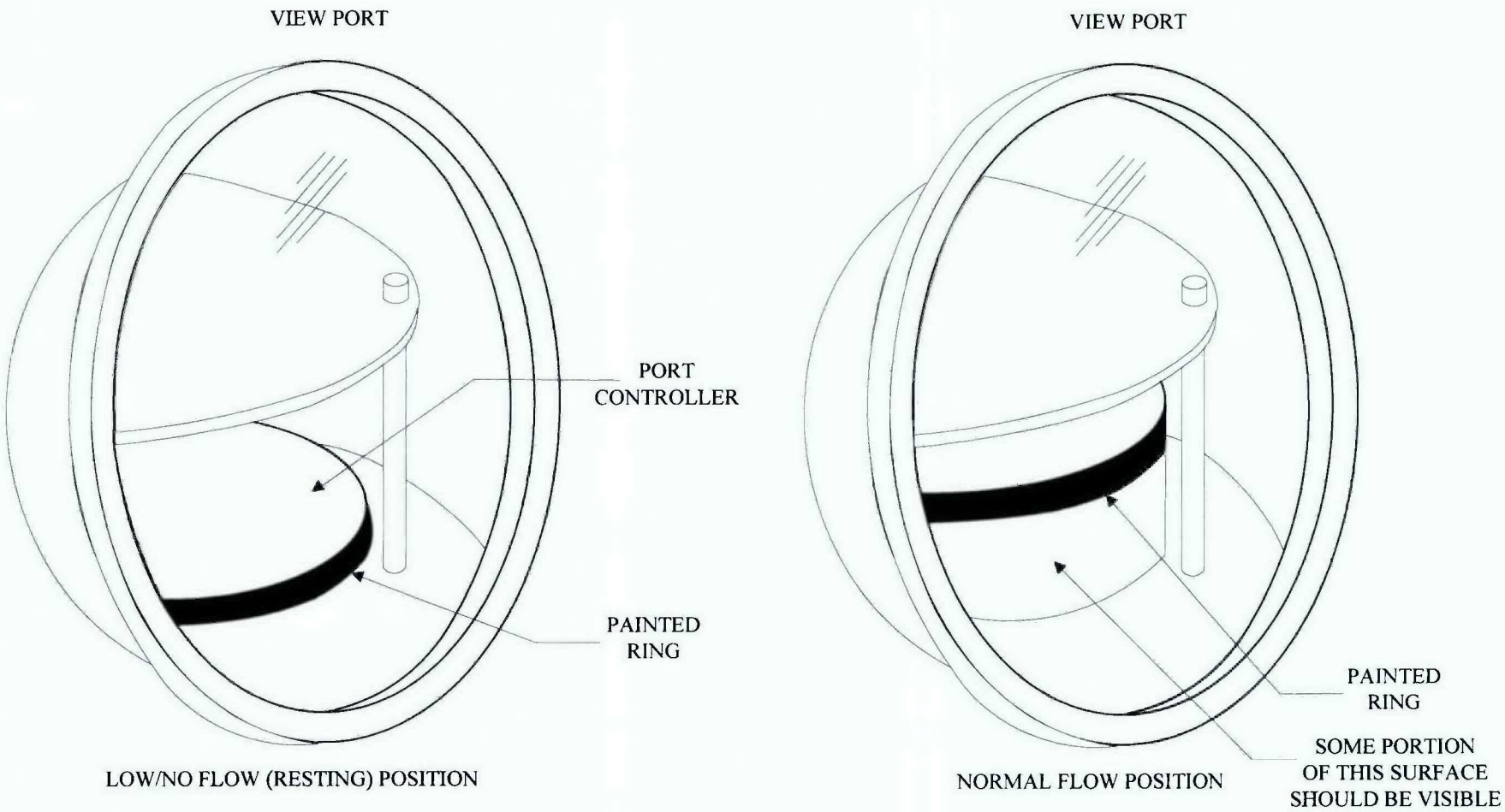

Figure 6 - Air Flow Controller Assembly

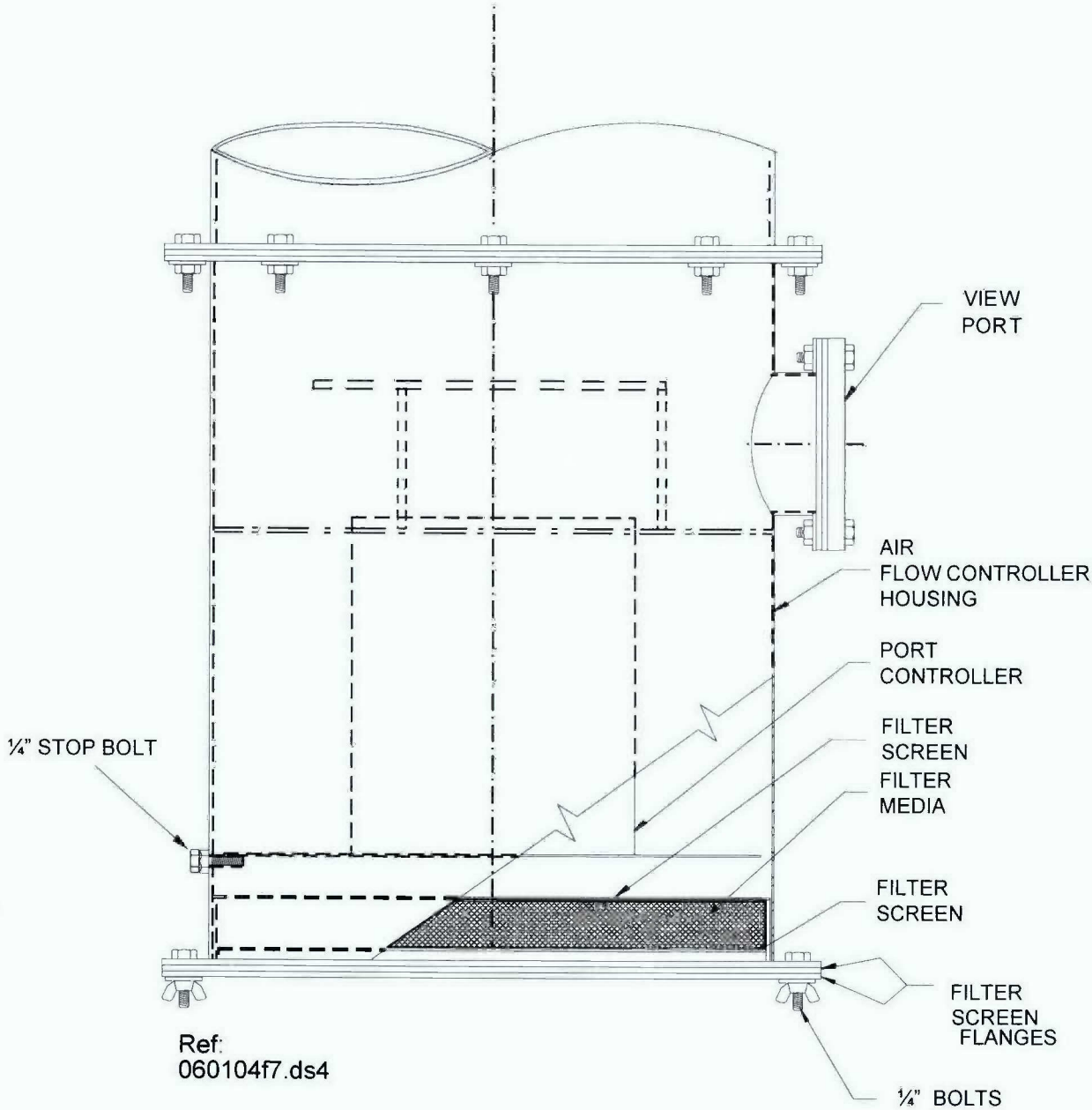

Appendix ZB, 241-AN Exhauster Stack 296-A-45 Air Flow Test Data Sheets

Tank Farm Maintenance Procedure	MAINTENANCE

USQ # N/A

Justification:

Periodic review

Summary of Changes:

no changes made

Next Periodic Review Date - 02/22/2014

Click for copy of Word (native) file

Appendix ZB, 241-AN Exhauster Stack 296-A-45 Air Flow Test Data Sheets

STACK 296-A-45 SITE SPECIFIC DATA

GENERAL INFORMATION

NOTE - Equipment identification numbers in this procedure preceded with a single number symbol (#) are prefixed by AN241-VTP-.

Stack:	27'-10 ½ " (height), 10.02" i.d. (circular diameter)
Flow Test Ports:	#FTP-659, #FTP-660, 1" coupling with plug, height above pad 24'-4 ⅗ "
Scaffolding:	None installed
Exhaust Fan:	#EF-010, 2851 acfm @ 22.7 in. wg. & 170 °F See H-14-020101, Sh. 11

PRECAUTIONS & LIMITATIONS

Erect approved scaffolding or arrange for aerial lift to allow access to stack flow test ports.

Vehicles should be kept off the dome if at all possible. Operations is required to log all traffic into AN Farm. A flagman is required for vehicle movement within the Tank Farm.

If a loss of flow occurs, contact the Shift Manager immediately.

See 3-VBP-155 for additional precautions and limitations.

PREREQUISITES

No additional prerequisites. See 3-VBP-155.

Records

The following records are generated during the performance of this procedure and are maintained in the CHAMPS work package as record material.

- Data Sheet 1
- Data Sheet 2
- Data Sheet 3
- Data Sheet 4
- Data Sheet 5
- Data Sheet 6

The record custodian identified in the Company Level Records Inventory and Disposition Schedule (RIDS) is responsible for record retention in accordance with TFC-BSM-IRM_DC-C-02.

Appendix ZB, 241-AN Exhauster Stack 296-A-45 Air Flow Test Data Sheets

Data Sheet 1

STEP	INSTRUMENT CALIBRATION DATA	
1	**AIR FLOW INSTRUMENT**	**Temperature & Relative Humidity (T & RH) Instrument**
	Flow Instrument Type	T & RH Inst. Type
	Instrument Code Number	Instrument Code Number
	Cal Due Date	Cal Due Date
ADDITIONAL INSTRUMENT CALIBRATION DATA		
2		
Comments:		

Initials/Date: _____

Data Sheet 2

BAROMETRIC PRESSURE READING					
STEP	Hanford Weather Forecaster (373-2716)				
3	Location	Station Number	Elevation (ft)	Time of Reading	Barometric Pressure (in. Hg)
	200 East	6	680		(P_b)
	Comments:				

INSTALLED INSTRUMENT READINGS			
4	Operating exhaust fan & filter bank(s):		B-Train: #EF-010
	Instrument	Location	Reading
	Stack Flow, SF_i	HMI, #CP-111 (Top right corner of HMI screen "Exhauster 'B'")	_____ SCFM
	FI-651	HMI, #CP-111 (on screen, below "Stack Flow")	_____ ACFM
	Comments:		

PRE-TEST PRESSURE LEAK CHECK			
5	[Reading ≥ 3.0 in. wg and stable (± 0.2 in. wg) for 15 sec.]	Impact Pressure _____ PASS / FAIL	Static Pressure _____ PASS / FAIL
	Comments:		

Initials/Date: _____

Figure 1 - 241-AN Stack 296-A-45 Air Flow Test Ports

AN Primary B-Train Exhauster	
Measurement	Test Ports
Humidity:	#FTP-659
Static Pressure:	#FTP-659
Temperature:	#FTP-659, #FTP-660
Velocity Pressure:	#FTP-659, #FTP-660

Stack Diameter:	10.02 inch I.D.
Stack Area:	0.5476 sq.ft.
Height from Bottom of Skid To #FTP-659 & #FTP-660:	24 ft 4 3/5 in.
Ground Elevation:	668 ft
FTP Elevation:	692 ft 4 3/5 in.

Note - Equipment Identification Numbers with a number symbol (#) are prefixed by AN241-VTP- on the field labels

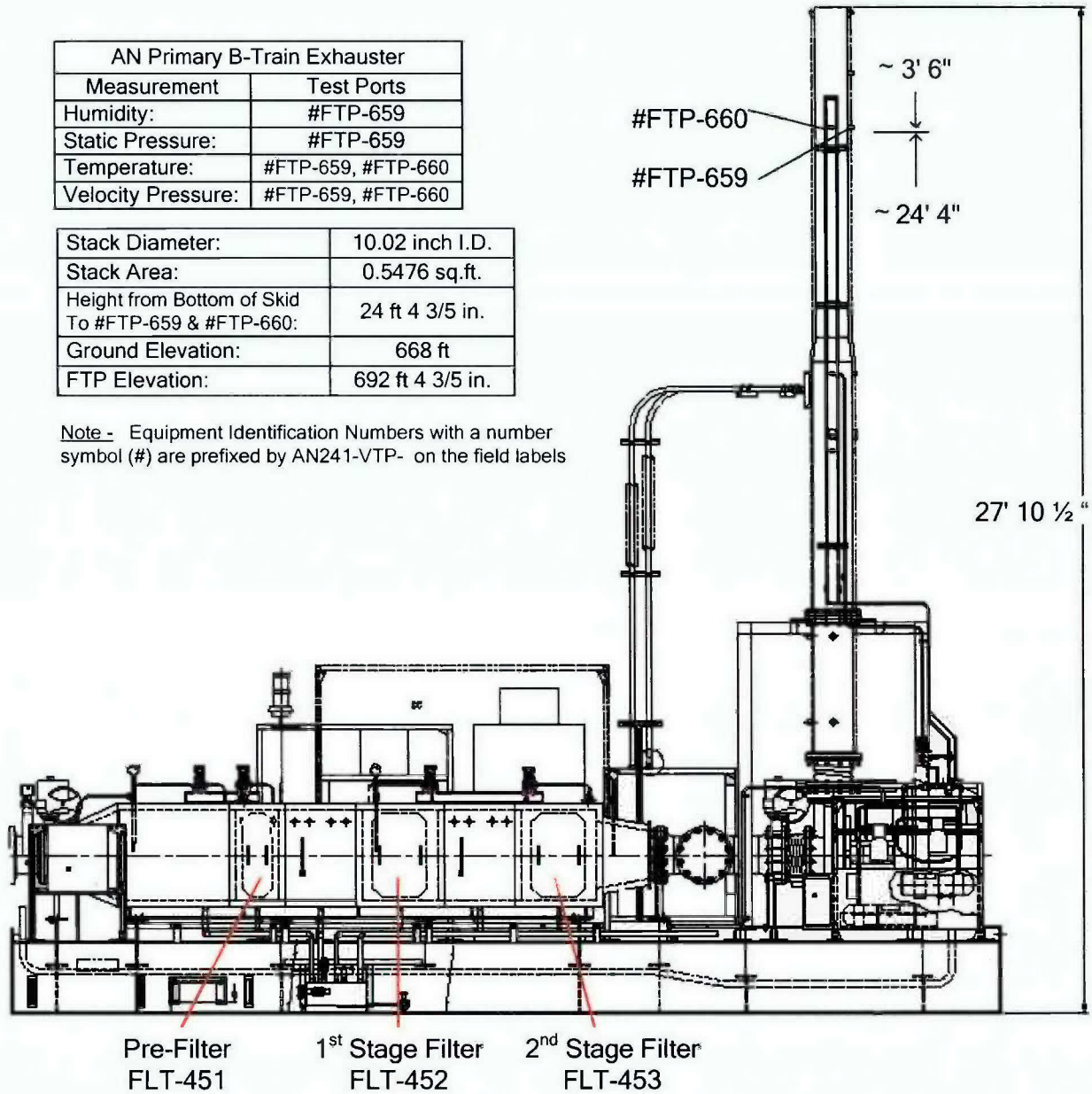

Data Sheet 3 (Sheet 1 of 2)

STACK AIR FLOW MEASUREMENTS						
STEP	TEST PORT #FTP-659					
6	Relative Humidity %:		(RH)			
7	Static Pressure, in. wg:		INITIAL		RETEST (IF REQUIRED)	
			(P_g)		(P_g)	
8	Traverse Points* (in.)	Temp. ts (°F)	Velocity (Initial) VP (in. wg)	Velocity (Initial) FPM** (ft/min)	Velocity (Retest) VP (in. wg)	Velocity (Retest) FPM** (ft/min)
	½					
	½					
	⅞					
	1¼					
	1¾					
	2¼					
	2⅞					
	3¾					
	6¼					
	7¼					
	7⅞					
	8⅜					
	8¾					
	9⅛					
	9½					
	9½					
9	TOTAL ts		TOTAL FPM		TOTAL FPM	

* Traverse points are measured relative to internal diameter (i.d.); none may be located within 0.5 in. of stack walls.

** $FPM = 4005\sqrt{VP}$

Time test completed: _____ Initials/Date: _____

Data Sheet 3 (Sheet 2 of 2)

STACK AIR FLOW MEASUREMENTS						
STEP	TEST PORT #FTP-660					
	Traverse Points* (in.)	Temp.	Velocity (Initial)		Velocity (Retest)	
		ts (°F)	VP (in. wg)	FPM** (ft/min)	VP (in. wg)	FPM** (ft/min)
8	½					
	½					
	⅞					
	1¼					
	1¾					
	2¼					
	2⅞					
	3¾					
	6¼					
	7¼					
	7⅞					
	8⅜					
	8¾					
	9⅛					
	9½					
	9½					
9	TOTAL ts		TOTAL FPM		TOTAL FPM	

* Traverse points are measured relative to internal diameter (i.d.); none may be located within 0.5 in. of stack walls.

** $FPM = 4005\sqrt{VP}$

Time test completed: _____ Initials/Date: _____

Data Sheet 4

STEP	PITOT TUBE PERFORMANCE CHECK - #FTP-659 AND #FTP-660		
10	(PASS = P ≤ ± 5%); FAIL = P > ± 5%) P = [(VP1 - VP2) ÷ VP1)] x 100 = % P = [(____ - ____) ÷ ____] x 100 = ____% If P > ± 5% AND VP1 < 0.04 in. wg, air flow retest is NOT required; Responsible Engineer will determine acceptability of pitot tube performance.		PASS/FAIL
	Comments:		
	POST-TEST PRESSURE LEAK CHECK- #FTP-659 AND #FTP-660		
11	[Reading ≥ 3.0 in. wg and stable (± 0.2 in. wg) for 15 sec]	Impact Pressure _____ PASS / FAIL	Static Pressure _____ PASS / FAIL
	Comments:		
	STACK AIR FLOW CALCULATIONS		
12	Total ts = ts1 + ts2 + ts3 + ...	ts(total), Port #FTP-659 (°F)	(Sht 3)
		ts(total), Port #FTP-660 (°F)	(Sht 3)
		ts(total) (#FTP-659 + #FTP-660)	
13	Average ts = Total ts ÷ 32	ts(avg), (°F)	
Traverse Point Velocity (FPM) = $4005\sqrt{VP}$		Data Sheet 3	
14	Total FPM = FPM1 + FPM2 + FPM3 + ...	FPM(total) Port #FTP-659	(Sht 3)
		FPM(total) Port #FTP-660	
		FPM(total) (#FTP-659 + #FTP-660)	
15	Average FPM = Total FPM ÷ 32	fpm(avg)	
16	Total CFM = Average FPM x 0. 5476 sq ft	cfm(total)	

Initials/Date: _____

Data Sheet 5 (Sheet 1 of 3)

ENVIRONMENTAL AIR FLOW CALCULATION WORKSHEET

AVERAGE ACTUAL STACK GAS VELOCITY (v_s)

$$v_s = K_p C_p \left(\sqrt{VP}\right)_{avg} \sqrt{\frac{T_{s(avg)}}{P_s M_s}}$$

AVERAGE STACK GAS DRY VOLUMETRIC FLOW RATE (Q_{sd})

$$Q_{sd} = 60\ (1 - B_{WS})\ v_s\ A \left(\frac{T_{std}}{T_{s(avg)}}\right)\left(\frac{P_s}{P_{std}}\right)$$

$$= 60\,(1 - B_{WS}) K_p C_p \left(\sqrt{VP}\right)_{avg} A \left(\frac{T_{std}}{P_{std}}\right)\sqrt{\frac{P_s}{T_{s(avg)} M_s}}$$

Eq. Input	Description	Value
B_{ws}	Stack gas water vapor: $B_{ws} = \left(\frac{RH}{100}\right)\left(\frac{P_{ws}}{P_s}\right)$	
RH	Stack relative humidity, percent	(Sht 3)
P_{ws}	Vapor pressure of H_2O at temperature $t_{s(avg)}$ in. Hg.	
K_p	Pitot tube constant: $85.49 \frac{ft}{sec}\left[\frac{(lb)(in.\ Hg)}{(lb\text{-}mole)°R\,(in.\ H_2O)}\right]^{\frac{1}{2}}$	85.49
C_p	Pitot tube coefficient, standard	0.99
$\left(\sqrt{VP}\right)_{avg}$	Average of velocity pressure sqrt, in. wg: $\left(\sqrt{VP}\right)_{avg} = fpm_{(avg)} \div 4005$	
$fpm_{(avg)}$	Average stack gas velocity, ft/min	(Sht 4)
A	Cross-sectional stack area, ft^2	0.5476
T_{std}	Standard absolute temperature, °R	528

Data Sheet 5 (Sheet 2 of 3)

ENVIRONMENTAL AIR FLOW CALCULATION WORKSHEET		
P_{std}	Standard absolute pressure, in. Hg	29.92
P_s	Absolute stack gas pressure, in. Hg: $P_s = P_b + (P_g \div 13.6)$	
P_b	Barometric pressure at test port, in. Hg	(Sht 2)
P_g	Stack static pressure, in. wg	(Sht 3)
$T_{s(avg)}$	Average absolute stack temperature, °R $T_{s(avg)} = 460 + t_{s(avg)}$	
$t_{s(avg)}$	Average stack gas temperature, °F	(Sht 4)
M_s	Molecular weight stack gas, wet, lb/lb-mole: $M_s = 29(1 - B_{ws}) + 18B_{ws}$	
CALCULATION (Q_{sd})		
		Q_{sd} = dscfm

Environmental Initials/Date: _____

Data Sheet 5 (Sheet 3 of 3)

ENVIRONMENTAL AIR FLOW CALCULATION WORKSHEET

Installed air flow instruments qualify for environmental reporting if they have passed testing specified in 40 CFR 52, Appendix E. This testing compares instrument and Pitot tube air flow measurements over a 168-hour test period and allows ± 10% difference between their average readings. The flow rate variance check performed below provides confidence in the continued accuracy of installed air flow instrumentation.

Flow rate variance greater than ± 10% should be evaluated by the Facility HVAC Responsible Engineer to determine its cause. Continued variance greater than ± 10% between installed instrument readings and Pitot tube measurements may invalidate use of air flow instrument readings for environmental reporting.

STACK MONITOR FLOW RATE VARIANCE CHECK (*% DIFF*)

$$\% DIFF = \left[\frac{Q_{sd} - (SF_i)}{Q_{sd}} \right] x100$$

Eq. Input	Description	Value
Q_{sd}	Avg stack gas dry volumetric flow rate, dscfm	(DSCFM) (Sht 5)
SF_i	Indicated stack gas volumetric flow rate, scfm	(SCFM) (Sht 5)

CALCULATION (*% DIFF*)

	*% DIFF** = %

* Facility Responsible Engineer shall be notified if variance (% DIFF) is greater than ± 10%.

Environmental Initials/Date: _____

Data Sheet 6

STEP	REVIEW/DISPOSITION
17	Facility Supervisor/FWS VERIFY all caps, plugs, and instrumentation have been restored to original configuration. Ventilation system restored to operating configuration: Supervisor/FWS (Signature) ____ Supervisor/FWS (Print Name) ____ Date ____
18	Facility Supervisor/FWS NOTIFY Responsible Engineer immediately for any failed items. Enter name of Engineer contacted if failed items exist, AND RECORD work request number(s) for items requiring additional maintenance OR enter N/A if no failed items exist. Return work package to Vent and Balance. Responsible Engineer contacted ____ Date ____ Work Request Number ____ Work Request Number ____
19	Vent and Balance reviewer VERIFY Data Sheets (with the exception of Air Flow Calculation Worksheets) are accurate, complete, and legible. Sign when complete. Vent and Balance Reviewer (Signature) ____ Vent and Balance Reviewer (Print Name) ____ Date ____
Comments:	

X = EQPT IDENT NO	
1	AW241-VTP-FLT-351
2	AW241-VTP-FTP-355
3	AW241-VTP-FTP-351
4	AW241-VTP-FLT-352
5	AW241-VTP-FLT-353
6	AW241-VTP-FTP-357
7	AW241-VTP-FTP-354
8	AW241-VTP-FTP-356
9	AW241-VTP-FTP-353
10	AW241-VTP-FTP-358
11	AW241-VTP-FTP-359
12	AW241-VTP-ENCL-116

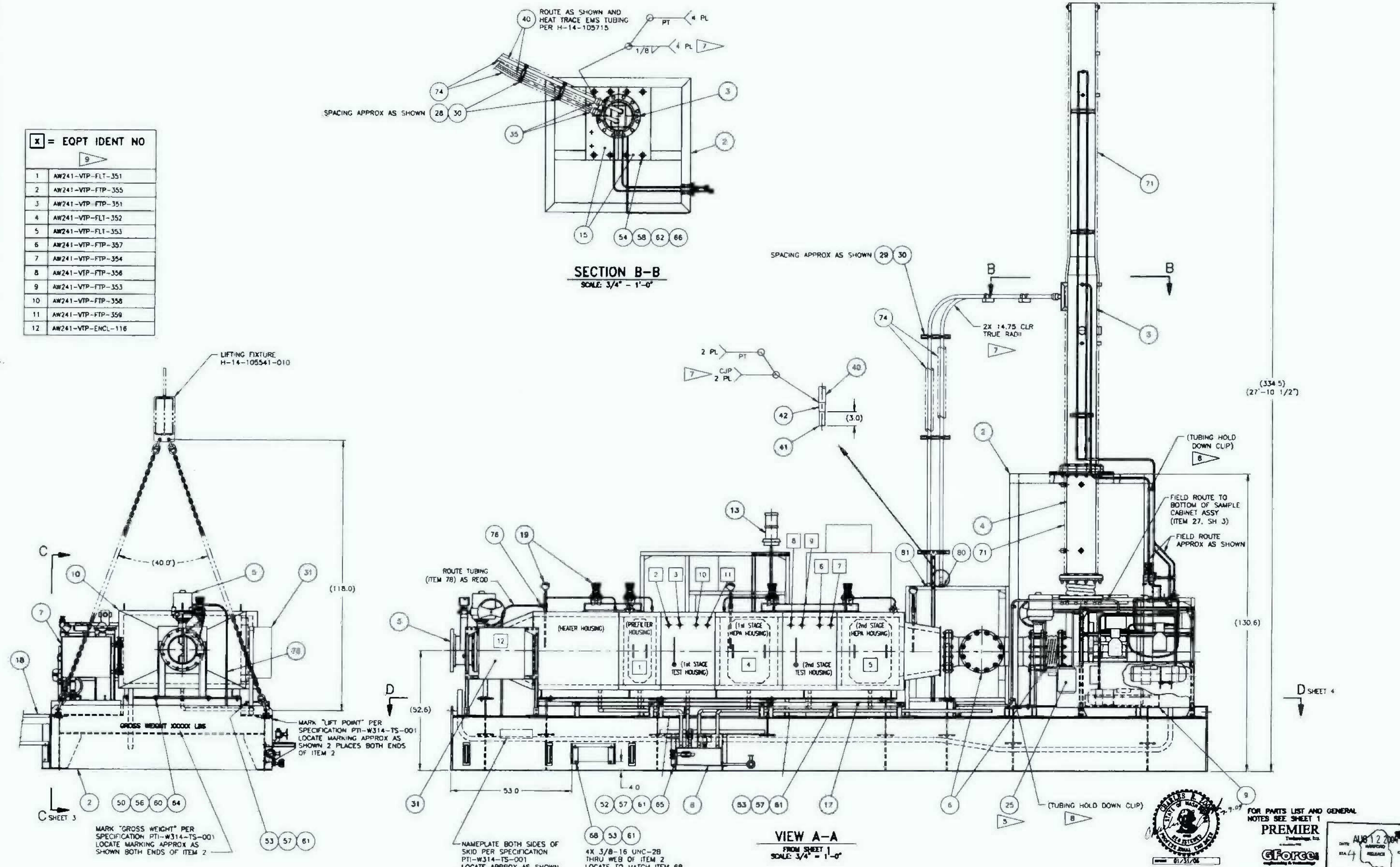

FOR PARTS LIST AND GENERAL NOTES SEE SHEET 1

PREMIER Technology, Inc.

GForce engineering & technology

AUG 12 2004 HANFORD RELEASE STA 4 ID 8

DIMENSIONING AND TOLERANCING SHALL BE INTERPRETED PER ANSI Y14.5M-1994
DIMENSIONS ARE IN INCHES UNLESS OTHERWISE SPECIFIED
UNSPECIFIED TOLERANCES SHALL BE:
DECIMAL .X ±.1 .XX ±.06 .XXX ±.030
ANGULAR ±2°
ALL IMPLIED 90° ANGLES SHALL BE PERPENDICULAR WITHIN THE GREATEST TOLERANCE OF THE LINEAR DIMENSIONS
ALL COAXIAL FEATURES SHALL BE CONCENTRIC WITHIN .031 INCH UNLESS OTHERWISE SPECIFIED

DWG NO	TITLE	REF NUMBER	TITLE
DRAWING TRACEABILITY LIST		REFERENCES	
		NEXT USED ON SHEET 1	

	REV	DESCRIPTION				
RB	2	INCORPORATED DCN-AW244				
	1	& AS-BUILT -AW064, -AW101, -AW150, -AW169 INCORPORATED DCN-AW013, -AW060,	SIGNATURES ON FILE			
	0	RELEASED FOR CONSTRUCTION	NA	NA	NA	NA

REVISIONS

NAME: RK FISHER; DE Bowers

SIGNATURES ON FILE

U.S. DEPARTMENT OF ENERGY
Office of River Protection

AW241 EXHAUSTER TRAIN "A" ASSEMBLY

F | 241AW | 8900 | H-14-105679 | 2

SCALE SHOWN | 820936 | SHEET 2

29716

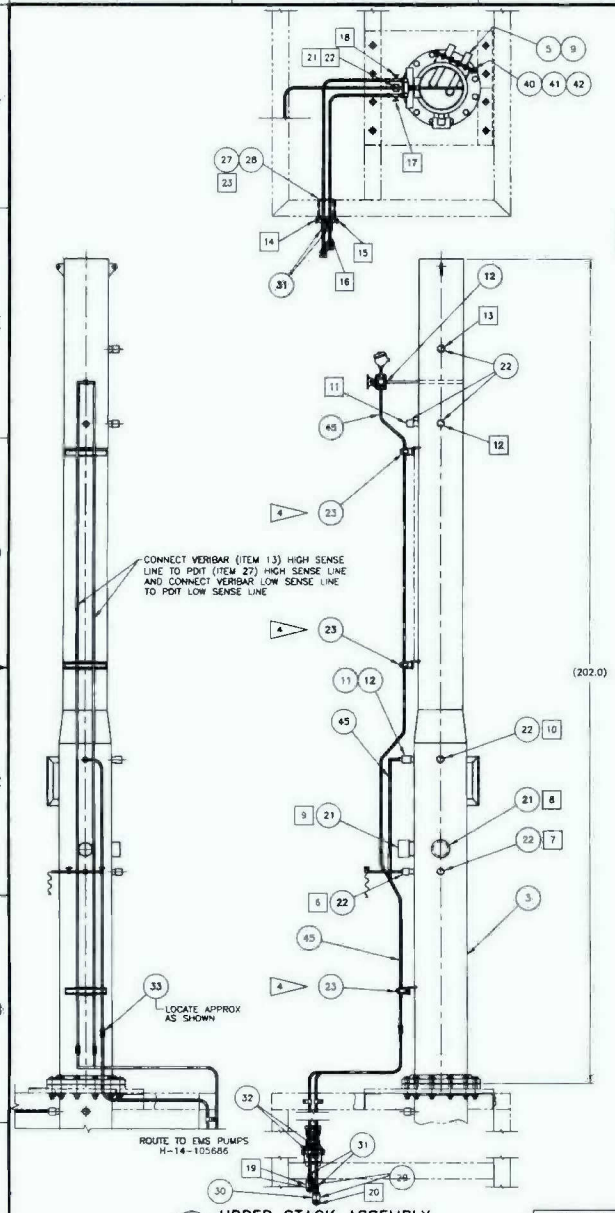

1 UPPER STACK ASSEMBLY
SCALE: 1" = 1'-0"

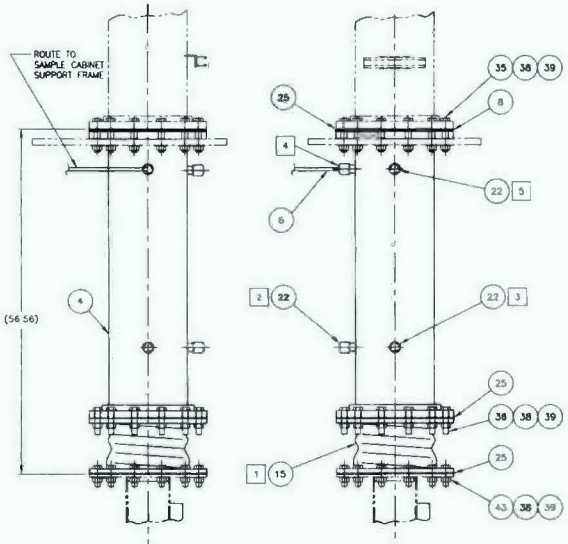

2 LOWER STACK ASSEMBLY
SCALE: 1/8

-030	-040	-050	-060	-070	PARTS / DASH NUMBER	NOMENCLATURE/DESCRIPTION	MATERIAL/REFERENCE	SHEET	ITEM NO
				16		HEX BOLT, 3/8-16 UNC-2A X 1" LONG	ASTM A193 GR B8		40
				16		HEX NUT, 3/8-16 UNC-2B	ASTM A194 GR 8F		41
				16		PLAIN WASHER, 3/8, (SERIES AND TYPE OPTIONAL)	18-8 SST		42
			12			HEX BOLT, HVY, 7/8-9 UNC-2A 3 LONG	ASTM A193 GR B8		43
AR						TUBE, 1 1/2 OD X .065 WALL, SMLS	ASTM A269 TYPE 304L		44
				AR		TUBE, 1/2 OD X .049 WALL, SMLS	ASTM A269 TYPE 304L		45
	AR	AR				PIPE, 12" SCHED 40S	ASTM A312 GR TP 304L		46
		AR				PIPE, 10" SCHED 40S	ASTM A312 GR TP 304L		47
		2				PIPE, 3" SCHED 40S X 2.0 LONG TOE	ASTM A312 GR TP 304L		48
	4	7				PIPE, 1" SCHED 40S X 2.0 LONG TOE	ASTM A312 GR TP 304L		49
		AR				PLATE, 1/2 THK	ASTM A240 TYPE 304L		50
		AR				ANGLE, 2 1/2 X 1 1/2 X 1/4 THK	ASTM A276 TYPE 304L		51
		3				ANGLE, 2 X 2 X 1/4 THK X 5.0 L	ASTM A276 TYPE 304L		52
AR						PLATE, 11 GA	ASTM A240 TYPE 304L		53

X = EQUIP IDENT NO.
(SEE NOTE 5)

1	AW241-VTP-EJ-551	9	AW241-VTP-FTP-557	17	AW241-VTP-V-583
2	AW241-VTP-FTP-551	10	AW241-VTP-FTP-558	18	AW241-VTP-V-584
3	AW241-VTP-FTP-552	11	AW241-VTP-FTP-559	19	AW241-VTP-V-585
4	AW241-VTP-FTP-553	12	AW241-VTP-FTP-560	20	AW241-VTP-V-586
5	AW241-VTP-FTP-562	13	AW241-VTP-FTP-561	21	AW241-VTP-TE-551
6	AW241-VTP-FTP-563	14	AW241-VTP-V-580	22	AW241-VTP-FE-551
7	AW241-VTP-FTP-554	15	AW241-VTP-V-581	23	AW241-VTP-PDIT-551
8	AW241-VTP-FTP-556	16	AW241-VTP-V-582		

PARTS LIST/MATERIAL LIST

-030	-040	-050	-060	-070	PARTS / DASH NUMBER	NOMENCLATURE/DESCRIPTION	MATERIAL/REFERENCE	SHEET	ITEM NO
					-010	UPPER STACK ASSEMBLY		1	1
					-020	LOWER STACK ASSEMBLY		1	2
				1	-030	UPPER STACK WELDMENT		2	3
			1		-040	LOWER STACK WELDMENT		3	4
				1	-050	PROBE WELDMENT		3	5
									6
									7
			1		-001	FLANGE, PLATE, 7 GA OR 3/16 THK	ASTM A240 TYPE 304L	3	8
				1	-002	GASKET, 1/4" THK 40-45 DURO	NEOPRENE ASTM D2000	2	9
									10
				1		REDUCER, 1" X 1/2" NPT CLASS 3000	ASTM A182 GR F 304L		11
				3	SS-810-1-8	MALE CONNECTOR, 1/2" TUBE X 1/2" NPT	SWAGELOK		12
		1			V100-10"SCH40S-10-V-D-WNS-C2GC	VERABAR FLOW SENSOR WITH INTEGRAL RTD	VERIS, INC		13
									14
			1		SEE NOTE 10	12" NOM BY 9" OAL, EXPANSION JOINT	HYSPAN		15
	2	1				PIPE FLANGE, SLIP-ON, 12" CLASS 150, FF	ASTM A182 GR F 304L		16
									17
									18
		1				PIPE, REDUCER, 12-10 CLASS 150, BW	ASTM A403 WP 304L		19
									20
				2		CAP, 3" NPT, CLASS 3000	ASTM A182 GR F 304L		21
				6		CAP, 1" NPT, CLASS 3000	ASTM A182 GR F 304L		22
				6	P2026	TUBING CLAMPS	UNISTRUT		23
		3			P1000	CHANNEL, 1 5/8" X 1 5/8" X 10.0 L	UNISTRUT		24
			4			GASKET, 12" 150#, FULL FACE 1/8" STYLE 3000	GARLOCK		25
2					35-712-111	SHROUDED SAMPLE PROBE TIP, 20FM	THERMO ANDERSON		26
				1	EJA120A-EES4B-92EC/FS1-01-HAC-F1	DIFFERENTIAL PRESSURE SMART TRANSMITTER, DP HART, 4-20mA	YOKOGAWA		27
				1	GP3TC-T-LSS-MB	VALVE, 3-WAY MANIFOLD	D/A MFG CO.		28
				2	SS-63TF8	3-PIECE BALL VALVE, 1/2 FNPT	SWAGELOK		29
				2	SS-8-P	PIPE PLUG, 1/2 MNPT	SWAGELOK		30
				4	SS-810-11-8	BULKHEAD MALE CONNECTOR	SWAGELOK		31
				2	SS-810-3	UNION TEE, 1/2	SWAGELOK		32
				3	SS-810-6	UNION, 1/2	SWAGELOK		33
									34
			12			HEX BOLT, HVY, 7/8-9 UNC-2A 5-1/2 LONG	ASTM A193 GR B8		35
			12			HEX BOLT, HVY, 7/8-9 UNC-2A 4 LONG	ASTM A193 GR B8		36
									37
			36			HEX NUT, HVY, 7/8-9 UNC-2B	ASTM A194 GR 8F		38
			36			LOCK WASHER, 7/8, (SERIES AND TYPE OPTIONAL)	18-8 SST		39

6 FOR SAMPLE TUBING RUNS (FROM PROBES TO CAM AND RECORD SAMPLER):
- THERE SHALL BE NO INWARD FACING STEPS AT THE TUBING CONNECTIONS THAT CAUSE MORE THAN A 1% REDUCTION IN TUBE DIAMETER.
- THE TUBING ENDS SHALL BE FREE OF BURRS AND CRIMPING.
- BENDS SHALL HAVE A CURVATURE RATIO (RADIUS OF CURVATURE OF THE BEND DIVIDED BY THE TUBE DIAMETER) OF AT LEAST 3.0.
- FLATTENING OF THE BEND CAUSED BY A BENDING PROCESS SHALL NOT EXCEED 15%, WHERE FLATTENING IS DEFINED IN TERMS OF THE ORIGINAL AND MINOR AXES OF THE TUBE CROSS SECTION AT THE ANGULAR MIDPOINT OF THE BEND.

SPECIAL FABRICATION TECHNIQUES MAY BE REQUIRED TO MEET THESE SPECIFICATIONS (ANSI/HPS N313-1999).

7 ITEMS 48 AND 49 MAY BE PURCHASED AS PIPE NIPPLES PER ASTM A733 GR TP 304L AND TRIMMED TO LENGTH AS SPECIFIED. THREADED PORTION ON ONE END OF PIPE NIPPLES MUST BE COMPLETELY REMOVED.

8 UNISTRUT MAY BE TYPE HG (HOT DIPPED GALVANIZED), PG (PRE-GALVANIZED), OR EG (ELECTRO-GALVANIZED). APPEND TO THE END OF UNISTRUT PART NUMBERS AS REQUIRED.

9. 7/8 HEX BOLTS (ITEMS 35, 36, & 43) MAY BE REPLACED WITH THREADED ROD. 7/8-9 UNC-2A LENGTH AS REQD. ASTM A193 GR B8 OR GR B8M WITH ADDITIONAL HEX NUTS AND LOCK WASHERS IF REQD TO ACCOMMODATE SPACE RESTRAINTS.

10. EXPANSION JOINT MAY BE EITHER PART NUMBER 2504/10L-080-7.0 OR 57194.

11. REVISION 3 OF THIS DRAWING WAS FIELD WALKED DOWN IN MAY 2010. FOR CHANGES MADE AND FOR ITEMS NOT VERIFIED IN FIELD, SEE ECN-727738-R0.

GENERAL NOTES:

1. FABRICATION AND WELDING SHALL BE IN ACCORDANCE WITH THIS DRAWING AND SPECIFICATION PTI-W314-TS-001.
2. ABBREVIATIONS ARE IN ACCORDANCE WITH ANSI Y1.1.
3. REMOVE ALL BURRS AND BREAK ALL SHARP EDGES.
4. SPACE THE TUBING CLAMPS (ITEM 23) AS NECESSARY TO FIT TUBING (ITEM 45).
5. NAME TAGS DENOTING EQUIPMENT IDENTIFICATION NUMBERS WILL BE PROVIDED BY CUSTOMER. TAGS SHALL BE LOCATED ON THE IDENTIFIED ASSEMBLY COMPONENTS IN LOCATIONS THAT ARE CLEARLY VISIBLE AFTER FINAL ASSEMBLY.

AUG 2 4 2010 DATE, ETA, HANFORD RELEASE 17

DIMENSIONING AND TOLERANCING SHALL BE INTERPRETED PER ANSI Y14.5M-1994.
DIMENSIONS ARE IN INCHES UNLESS OTHERWISE SPECIFIED.
UNSPECIFIED TOLERANCES SHALL BE:
DECIMAL X ± .1 .XX ± .06 .XXX ± .030
ANGULAR ± 1°
ALL IMPLIED 90° ANGLES SHALL BE PERPENDICULAR WITHIN THE GREATEST TOLERANCE OF THE LINEAR DIMENSIONS.
ALL COAXIAL FEATURES SHALL BE CONCENTRIC WITHIN .031 INCH UNLESS OTHERWISE SPECIFIED.

DWG NO	TITLE
H-14-105676	AW241 EXH TRAIN A & B DWG INDEX
REF NUMBER	TITLE
REFERENCES	
NEXT USED ON H-14-105679	
DRAWING TRACEABILITY LIST	

REV	DESCRIPTION	DATE	BY	CHECKED	APPROVED
4	DIRECT REV PER ECN-727738-R0	8/10			

REVISIONS

NAME / DATE / SIGNATURE
DRAWN BY
CHECKED BY
ENGINEER
PROJECT ENGINEER

U.S. DEPARTMENT OF ENERGY
Office of River Protection

AW241-VTP (W-314)
EXHAUSTER TRAIN "A" UPPER & LOWER STACK ASSEMBLIES

SIZE	SYSTEM NO	DRAWING NO	DWG NO	REV
F	241AW	B900	H-14-105681	4

SCALE SHOWN | DATE 8/20/08 | SHEET 1 OF 3

Operate AW Tank Farm Primary Ventilation System (VTP)

Tank Farm Plant Operating Procedure **VENTILATION**

USQ # XXXX, Rev X

CHANGE HISTORY (≤ LAST 5 REV-MODS)			
Rev-Mod	**Release Date**	**Justification**	**Summary of Changes**
C-0	MM/DD/20YY	Complete revision	All pages
B-4	05/30/2012	Operations request.	Reworked several steps in Section 5.3 to match field conditions and computer responses.

Next Periodic Review Date - MM/DD/20YY

Click for copy of Word (native) file

This is a new revision. The First Time Use process as defined in TFC-OPS-OPER-C-13 can be used during the initial performance of this revision.

Table of Contents Page

1.0 PURPOSE AND SCOPE 3
- 1.1 Purpose 3
- 1.2 Scope 3

2.0 INFORMATION 3
- 2.1 Terms and Definitions 3
- 2.2 General Information 3

3.0 PRECAUTIONS AND LIMITATIONS 4
- 3.1 Personnel Safety 4
- 3.2 Equipment Safety 5
- 3.3 Radiation and Contamination Control 5
- 3.4 Environmental Compliance 6
- 3.5 Limits 6

4.0 PREREQUISITES 6
- 4.1 Special Tools, Equipment, and Supplies 6
- 4.2 Performance Documents 7
- 4.3 Field Preparations 7

5.0 PROCEDURE 10

5.1 Start Up Primary Ventilation System 10
5.2 Shutdown Primary Ventilation System 18
5.3 Stack Flow Setpoint Adjustment 19
5.4 Routine Switching of Exhaust Fans and Maintenance Activities 20
5.5 Short Term Shut Down of A or B Train Primary Ventilation 25
5.6 Re-Start After Short Term Shutdown of Primary Ventilation 26
5.7 Glycol Tank Filling and Draining 30
5.8 Seal Pot Filling 33
5.9 Seal Pot Filling SP-101 (AW inactive VTP Seal Pot) 34
5.10 Temporary Emergency Power 35
5.11 Operate Primary Tank Inlet Stations 36
5.12 Place Exhauster in CAM Bypass Mode 39
5.13 Remove Exhauster from CAM Bypass Mode 40
5.14 Manually Switch Operating Sample Pumps 41
5.15 Records 42
Table 1 - De-Entrainer Valve Line-Up HMI Valves 43
Table 2 - De-Entrainer Valve Line-Up Non-HMI Valves 44
Table 3 - Off-Skid Valving 46
Table 4 - Initial Exhaust Train Valve Line-Up 48
Table 5 - Electrical Line-Up 50
Table 6 - Isolation Electrical Table 50
Table 7 - Inlet System Components 51
Table 8 - Inlet System Valves 52
Comment Page 54
Signature Sheet 55
Figure 1 - A-Train (AW241-VTP-EF-009) and B-Train (AW241-VTP-EF-010) 56
Figure 2 - Ventilation System De-Entrainer 58
Figure 3 - Stack Sampling System 59
Figure 4 - Tank Air Inlet Station Equipment 61
Figure 5 - Ventilation Inlet System 62
Figure 6 - Air Flow Controller Flow Verification 64
Figure 7 - Air Flow Controller Assembly 65

1.0 PURPOSE AND SCOPE

1.1 Purpose

This procedure provides instructions for operation, switching, and isolation of A-Train (AW241-VTP-EF-009) and B-Train (AW241-VTP-EF-010) for 241-AW primary ventilation system.

1.2 Scope

This procedure applies to 241-AW Primary Tank Ventilation system and air inlet stations, which provides ventilation to six waste storage tanks and associated equipment.

2.0 INFORMATION

2.1 Terms and Definitions

- EIN Equipment Identification Number
- HMI Human Machine Interface
- MCS Monitor and Control System

2.2 General Information

2.2.1 It is implied that all Equipment Identification Numbers (EIN) are preceded by AW241-VTP- throughout this procedure, unless otherwise indicated.

2.2.2 The Primary A-Train and B-Train systems share one pair of de-entrainer vessels DE-005 and DE-006. These are located upstream of inlet valves MOV-352 and MOV-452.

2.2.3 The AW Tank Farm Primary Ventilation System, including de-entrainers and tank pressure transmitters, are controlled through computer interfaces called Human Machine Interfaces (HMIs) installed on the ventilation skid. This system has two HMIs, either of which can control either train as needed.

2.2.4 Normal operation is with one primary fan running while the other primary fan is offline. During switching fans, both exhausters will operate for a short period of time during the cross over from one fan running to the next. Continuous dual fan operation at over 4000 cfm is not authorized at this time and requires Environmental considerations before authorization. Dual fan operation at less than or equal to 4000 cfm for more than a 24 hour period also requires Environmental considerations before authorization.

2.2 General Information (Cont.)

2.2.5 HMI provides all significant ventilation system information, including pressures, flows, temperatures, water/glycol levels, radiation levels, and MOV positions. There is an approximately 9 gallon seal pot for each exhaust train. At levels above 50% as observed on the local sight glass, the seal pots drain to a single de-entrainer seal pot. The de-entrainer seal pot is approximately 6 gallons and drains to 106-AW at levels above 93% as measured by LI-170.

3.0 PRECAUTIONS AND LIMITATIONS

3.1 Personnel Safety

WARNING - Switching or starting fans that have been down for an extended period, may cause condensate to be blown out of the stack. Personnel notifications need to be done to clear the immediate area PRIOR to switching or startup of the system to avoid potential personnel contamination.

3.1.1 Operations performed under this procedure are controlled by TVIS-AW-001 and SEG 1 or if performing procedure with no ventilation - SEG 4. When ventilation is inoperable, respiratory protection in conjunction with IHT monitoring is required.

3.1.1.1 Minimum required respiratory protection and voluntary upgrade is identified in TVIS-AW-001.

3.1.1.2 Monitoring and/or sampling requirements will be specified in the Industrial Hygiene Sample plan (IHSP).

3.1 Personnel Safety (Cont.)

3.1.2 Personnel who operate circuit breakers other than those directly fed from a 300-600 volt utility transformer, electrical disconnect switches, similar switch gear equipment, and *Start/Stop Push Button operation up to 600 volts, with doors closed and all covers in place shall wear, as a minimum Hearing Protection, Non-melting (untreated natural fiber) Apparel, Safety Glasses, and Hand Protection.

EXCEPTION: If either of the following conditions are met, the above minimum PPE for shock or electrical hazards is not required.

A) The circuit is rated 240 volts or less, is supplied by one transformer, and the transformer supplying the circuit is rated less than 125KVA

B) The incident energy is less than 1.2 cal/cm2 at the working distance.

* If the Start/Stop Push Button is Remotely Operated, Shock or Arc-Flash Protection Does Not Apply.

3.2 Equipment Safety

CAUTION - Operating the Ventilation system with a tank liquid level less than OSD-T-151-00007 limit could cause damage to tank structural integrity.

3.2.1 Hand-held radios are not to be operated within 3 feet of the control cabinet, because of the potential for interference with the temperature instrument readings/indications.

3.3 Radiation and Contamination Control

3.3.1 When work is performed in, or when work will result in, a high contamination, high radiation, or an airborne radioactivity area, then an approved work package must be developed which is reviewed by Radiological Control per TFC-ESHQ-RP_RWP-C-03, ALARA work planning.

3.3.2 A general Radiological Work Permit may be used to perform this procedure contingent upon no part of the activity being performed within a High Contamination Area, High Radiation Area, or Airborne Radioactivity Area.

3.3.3 The opening of any system or component within a Radiological Area requires the presence of a Health Physics Technician to verify contamination control.

3.3.4 Externals of caps, plugs, and instrumentation shall be surveyed before and after removal from the ventilation system, and again after re-installation.

3.4 Environmental Compliance

3.4.1 To ensure reporting requirements are met, all planned and unplanned outages of Tank Farm ventilation systems, abatement control equipment, and exhaust monitoring systems (Record Sampler and CAM), must be immediately reported to Environmental per the Environmental On-Call List in compliance with TFC-ESHQ-ENV_FS-C-01.

3.4.2 Waste transfers into, out of, or within the 241-AW tank farm requires that the record sampler loop/ventilation system be operational. The CAM/record sampler loop can NOT be bypassed during these activities. The CAM record sampler loop must be in continuous sample mode whether or not a transfer is going on.

3.4.3 If exhauster train has been out of service greater than 30 days, ensure all exhauster annual calibrations and tests as identified in RPP-16922, Section 2, are completed as required in Step 4.3.3.

3.5 Limits

Some steps in this procedure implement Defense in Depth controls as described in RPP-13033, Tank Farms Documented Safety Analysis.

OSD-T-151-00007, Operating Specifications for the Double Shell Storage Tanks

RPP-11413, Technical Basis for Ventilation System Requirements

RPP-16922, Environmental Specifications Requirements

TFC-ESHQ-ENV-STD-06, Environmental Requirements Standard

4.0 PREREQUISITES

4.1 Special Tools, Equipment, and Supplies

The following supplies may be needed to perform this procedure:

- Nitrile gloves
- Goggles or face shield with goggles
- Absorbent rags
- 2-way radio
- Container for seal pot water
- 50/50 mix of propylene glycol and de-mineralized water for glycol system (MSDS #038772, MSDS #041791 or equivalent)
- AW Farm access keys
- CAM Interlock Bypass key
- Funnel/Fill hose.

4.2 Performance Documents

The following procedures may be needed to perform this procedure:

- TF-OR-DR-EV, EV Daily Rounds
- TF-OPS-005, Daily CAM and Record Sampler Inspections
- TF-OPS-006, Air Sample Filter Exchange and Inspections for Record Samplers, Stack, and Annulus CAMs
- TF-OPS-031, Inspections and Source Checks of AMS-4 CAMs and Effluent Record Samplers on AW HMI-Controlled Exhausters
- TFC-ESHQ-S-STD-03, Electrical Safety
- ARP-T-231-EXH(A), Respond to A-Train Alarms at 241-AW-VTP Exhaust Skid
- ARP-T-231-EXH(B), Respond to B-Train Alarms at 241-AW-VTP Exhaust Skid
- H-14-020102, AW241 Primary Ventilation System P & ID.

4.3 Field Preparations

NOTE - The steps in this section may be performed in any logical order or concurrently.

_____ 4.3.1 **IF** performing a START-UP of the Primary Ventilation system, Shift Manager **AUTHORIZES** using one of the following methods:

Check
(✓)

_____ Section 5.1 Start-Up Primary Ventilation System (Initial line ups).

_____ Section 5.6 Re-Start After Short Term Shutdown.

4.3.2 **IF** performing a SHUTDOWN of the ventilation system, Shift Manager/OE **VERIFY** there are no ongoing transfers or mixer pump operation activities in AW Farm that require this ventilation system to be operating.

_____ / _____ / _____

Signature — Print — Date
Shift Manager /OE

4.3 Field Preparations (Cont.)

NOTE - Steps 4.3.3 and 4.3.4 are required for operability checks, and will be required for initial start-up in Section 5.1.

4.3.3 **IF** exhauster is being started up after being shut down longer than 30 days, **VERIFY** from the Table below the following differential pressure gauges, and temperature gauges have been calibrated within the last 365 days and HEPA filters have been challenge (aerosol) tested within the last 365 days in accordance with RPP-16922, Section 2. **(RPP-11413, RPP-16922)**

296-A-46 (A-Train AW241-VTP Primary Tank Ventilation System)			
Vent Sub-System	**Sub-System Equipment Id. Number (EIN)**	**PM Id**	**(✓or OS) If Calibrations/Tests are current or Out of Service/Specifications[1] (N/A) If Not Applicable**
VTP Exhauster A-Train dp & Temperature Instrumentation	AW241-VTP-PDIT-356	ET-08288	
	AW241-VTP-PDIT-357	ET-08289	
	AW241-VTP-PDIT-358	ET-08290	
	AW241-VTP-TE-353/355	ET-09154/ET-09155	
VTP A-Train Exhaust HEPA Filter Challenge Tests	AW241-VTP-FLT-352	ET-09176	
	AW241-VTP-FLT-353	ET-09177	
296-A-47 (B-Train AW241-VTP Primary Tank Ventilation System)			
VTP Exhauster B-Train dp & Temperature Instrumentation	AW241-VTP -PDIT-456	ET-08293	
	AW241-VTP -PDIT-457	ET-08294	
	AW241-VTP-PDIT-458	ET-08295	
	AW241-VTP-TE-453/455	ET-09150/ET-09151	
VTP B-Train Exhaust HEPA Filter Challenge Tests	AW241-VTP-FLT-452	ET-09178	
	AW241-VTP-FLT-453	ET-09179	
VTP Inlet Station HEPA Filter	AW101-VTP-FLT-202	ET-08766	
	AW102-VTP-FLT-204	ET-08770	
	AW103-VTP-FLT-206	ET-08771	
	AW104-VTP-FLT-208	ET-08772	
	AW105-VTP-FLT-210	ET-08773	
	AW106-VTP-FLT-212	ET-08774	
AW241 A-TRAIN De-Entrainer	AW241-VTP-PDIT-152	ET-08284	
AW241 B-TRAIN De-Entrainer	AW241-VTP-PDIT-162	ET-08285	

Special Instructions :

[1] **With the exception of aerosol testing of filters (using a work package), DO NOT start exhauster until <u>all</u> required calibrations/Tests are current.**

_____ / _____ / _____

Signature — Print — Date

Shift Manager /OE

4.3 Field Preparations (Cont.)

NOTE - RPP-16922 requires CAMs for major stacks to be calibrated annually.

4.3.4 **VERIFY** calibration of continuous air monitor (CAM) has been performed within last 365 days. **(RPP-16922)**

A-Train: ET-09080 B-Train: ET-09079

Date Last Done: _____

_____ / _____ / _____
Signature Print Date
Shift Manager /OE

NOTE - Running system in CAM bypass requires notification of Environmental (See Step 3.4.2 for requirement).

4.3.5 **IF** exhauster is to be run without a stack CAM, **OBTAIN** permission from Shift Manager to run system in CAM Bypass.

_____ / _____ / _____
Signature Print Date
Shift Manager /OE

4.3.6 **VERIFY** applicable pre-requisites of Section 4.3 and all fieldwork affecting the start-up of the primary ventilation system has been completed and start-up of the identified exhaust train is authorized **AND**

MARK ✓ the exhaust train authorized to start-up below.

A-Train: _____ B-Train: _____

_____ / _____ / _____
Signature Print Date
Shift Manager /OE

5.0 PROCEDURE

NOTE - If high radiation alarm interlock requires bypass, CAM Interlock bypass permission must be obtained from Shift Manager. When work is complete, bypass must be disabled through HMI and Shift Manager notified.

- All sections apply to both A-Train and B-Train. If each train EINs are not listed in full nomenclature, then A-Train partial EIN will be listed first followed by B-Train partial EIN in square brackets, e.g., V-555 [655].
- Only one fan train is to be in operation at any one time. During routine switching operations both fans may run for a short period of time.
- Unless otherwise noted, HMI operations take place from the 241-AW Ventilation Control System Screen (EV-02-01).
- Sections may be performed as needed, provided applicable pre-requisites are met.

5.1 Start Up Primary Ventilation System

NOTE - Section 5.1 provides valve line-up, electrical line-up, and initial start-up and re-start of primary ventilation system after long term shut down (>30 days), unknown field condition(s), or at discretion of Shift Manager/OE.

5.1.1 **CHECK** all applicable pre-requisites of Section 4.3 have been met before performing this section.

CAUTION

Operating the Ventilation system with a tank liquid level less than OSD-T-151-00007 limit could cause damage to tank structural integrity.

5.1.2 **CHECK** liquid level in each tank is ≥ 6.0 inches. (OSD-T-151-00007)

5.1.2.1 **IF** tank liquid level(s) are not within limits identified in Step 5.1.2, **STOP AND**

NOTIFY Shift Manager/OE.

5.1.3 **IF** exhauster is to be run using temporary emergency power, **GO TO** Section 5.10, for connecting temporary power.

5.1 Start Up Primary Ventilation System (Cont.)

5.1.4 **PRIOR** to operating electrical breakers/Disconnect switches, **DON** appropriate PPE per Step 3.1.2 in compliance with TFC-ESHQ-S-STD-03.

5.1.5 **IF** temporary emergency power is not used to run the exhauster, **ENSURE** appropriate main transfer switch identified below is in the position identified.

Train	EIN	Position
A	AW241-VTP-MTS-350	Power Source - AW241-EDS-DP-130, BKR #1
B	AW241-VTP-MTS-450	Power Source - AW241-EDS-DP-130, BKR #4

5.1.6 **AS** directed by Shift Manager, **PERFORM** electrical line-up per Table 5 **AND**

INITIAL applicable block as equipment is operated or verified in position.

NOTE - Either exhauster HMI may be used to run either exhauster. In addition, either exhauster can be run remotely from any HMI connected and configured on the TFLAN network.

5.1.7 **ENSURE** LOGIN to the TFLAN connected workstation or local HMI as "AWExhop".

5.1.8 **SELECT** either "AW Exhauster A" button or "AW Exhauster B" button (depending on which exhauster is to be started).

NOTE - Out of range or bad signal quality will be denoted by red "X" or single red slash through the process parameter reading indication.

5.1.9 **ENSURE** process signals on this screen are good quality denoted by no red "X" or single red slash through any process reading indication.

5.1.9.1 **IF** a red "X" or single red slash through any process reading is observed, **NOTIFY** the Shift Manager/OE.

5.1.10 **ACKNOWLEDGE** visible alarms on HMI by selecting "AW Farm Ventilation" from the upper tool button banner.

5.1 Start Up Primary Ventilation System (Cont.)

NOTE - AW Farm Ventilation alarms will include AW Exhauster A and AW Exhauster B alarms.

5.1.11 **RESPOND** to active alarms in accordance with ARP-T-231-EXH (A) or ARP-T-231-EXH (B).

NOTE - Normally, only one primary de-entrainer is valved in at a time.

5.1.12 **OBTAIN** direction from Shift Manager/OE to determine whether DE-005 or DE-006 or both de-entrainers are to be valved in.

Check (✓)

_____ DE-005

_____ DE-006

_____ Both DE-005 and DE-006

NOTE - When aligning De-Entrainer valves the technician has 60 seconds from the start of valve movement until it reaches the next limit switch.

5.1.13 **ENSURE** de-entrainer valving is in accordance with Table 1 by visually verifying valve position from the HMI.

5.1.13.1 **INITIAL** appropriate blocks on Table 1 as valves are positioned or verified.

5.1.14 **AS** directed by Shift Manager or when coming out of long term shutdown, **PERFORM** the following Steps 5.1.14.1 through 5.1.14.3:

5.1.14.1 **POSITION** applicable MANUAL valving for de-entrainers per Table 2 **AND**

INITIAL appropriate blocks as valves are positioned.

5.1.14.2 **POSITION** off-skid valving per Table 3 **AND**

INITIAL appropriate blocks as valves are positioned.

5.1.14.3 **POSITION** exhauster train valving per Table 4 **AND**

INITIAL appropriate blocks as valves are positioned or verified.

5.1 Start Up Primary Ventilation System (Cont.)

5.1.15 **AS** directed by Shift Manager, **POSITION** AW-Farm inlet station bypass and butterfly valves per Table 8 (See Figure 5) **AND**

INITIAL AND DATE appropriate blocks as valves are positioned and independently verified.

5.1.15.1 **INDEPENDENTLY VERIFY** that AW104-VTP-V-249A and AW106-VTP-V-250A are OPEN **AND**

DOCUMENT on Table 8.

5.1.15.2 **IF** directed by Shift Manager to position valves other than as listed in Table 8, **RECORD** deviation on Comment Page.

5.1.16 **CHECK** de-entrainer seal pot level LI-170 (located in field or on de-entrainer HMI screen) is above 40%.

5.1.16.1 **IF** level is not within range, **NOTIFY** Shift Manager **AND**

AS directed by Shift Manager, **FILL/RE-FILL** de-entrainer seal pot per Section 5.8.

5.1.17 **CHECK** in field or on HMI, the seal pot level is greater than 30%, using indicator listed below for appropriate exhauster train.

Train	EIN-HMI	EIN-Field
A	LI-380	AW241-VTP-SG-380
B	LI-480	AW241-VTP-SG-480

5.1.17.1 **IF** level is not within range, **FILL/REFILL** seal pot to appropriate level per Section 5.8.

5.1.18 **CHECK** in field or on HMI, the glycol level, using indicator listed below for appropriate exhauster train, is between 45% - 75%.

Train	EIN-HMI	EIN-Field
A	LI-370	AW241-VTP-LG-370
B	LI-470	AW241-VTP-LG-470

5.1.18.1 **IF** level is not within range, **FILL/REFILL** glycol tank to appropriate level per Section 5.7.

5.1 Start Up Primary Ventilation System (Cont.)

5.1.19 **CHECK** no active alarms are present on HMI alarms page for exhauster being started by selecting the HVAC Alarms tab at the top of the screen.

5.1.19.1 **IF** active alarms are present (State: ACT), **RESPOND** per ARP-T-231-EXH(A) or ARP-T-231-EXH(B) as applicable.

5.1.20 **IF** exhauster will be run in CAM Bypass, **PERFORM** Section 5.12 **AND**

GO TO Step 5.1.22.

5.1.21 **IF** exhauster will NOT be run in CAM Bypass, **ENSURE** Primary Exhaust CAM, AW241-VTP-RT-554/654, Beta/Gamma Monitor is ON,

OR

CONFIRM HMI indications for RAH-554/654 and RAX-554/654 display "NORMAL".

5.1.22 **REQUEST** operating flow rate from Shift Manager.

5.1.23 **IF** flow rate is required to be changed, **PERFORM** the following:

5.1.23.1 **SELECT** exhaust fan "PID" button

.

5.1.23.2 **EXPAND** the fan faceplate by selecting the three button bar .

5.1.23.3 **SELECT** internal set point "Int Sp".

5.1.23.4 **ADJUST** to the desired setpoint as directed by the Shift Manager.

5.1.23.5 **CLICK** on ENTER .

5.1.23.6 **ENSURE** internal set point "Int Sp" is the desired stack flow.

a. **IF** internal set point "Int Sp" is not at the desired stack flow, **REPEAT** Steps 5.1.23.3 to 5.1.23.6.

5.1 Start Up Primary Ventilation System (Cont.)

WARNING

Switching or starting fans that have been down for an extended period, may cause condensate to be blown out of the stack. Personnel notifications need to be done to clear the immediate area PRIOR to switching or startup of the system to avoid potential personnel contamination.

5.1.24 **CHECK** all non-essential personnel have cleared the immediate area.

5.1.25 **OPEN** the following exhaust fan drain valve for two minutes for the fan being started to ensure any rain water or condensation collected in the fan housing is drained **AND THEN**

CLOSE the exhaust fan drain valve for the fan being started.

Train	EIN
Train A Drain Valve	AW241-VTP-V-369
Train B Drain Valve	AW241-VTP-V-469

5.1.26 **NOTIFY** Shift Manager, 242-A Shift Manager, and TMACS exhauster EF-009 (A-Train) or EF-010 (B-Train) will be started.

5.1.27 **OPEN** AW Sequence (AW Sequence) in the upper left corner of the process screen.

5.1.28 **SELECT** desired exhauster to run .

5.1.28.1 **CLICK** on ENTER .

NOTE - Performing Steps 5.1.29 and 5.1.29.1 will allow exhauster selected to enter an automatic startup sequence. Devices required to run the exhauster will be set to "Auto" and the glycol pump will begin to run. Upon completion of the glycol preheat operation and the Glycol tank Temperature is greater than 110°F, the inlet valve will open, and exhauster selected will start.

5.1.29 **SELECT** the desired exhauster green start button or .

5.1.29.1 **CLICK** on ENTER .

5.1 Start Up Primary Ventilation System (Cont.)

5.1.30 **ENSURE** the exhauster has started by verifying the stack flow reading FI-551 for A Train or FI-651 for B Train is greater than 0 SCFM.

NOTE - At fan startup, some interlocks and alarms will be suppressed for approximately two minutes to allow exhauster to stabilize. Interlock status enabled or disabled (flashing text) will be listed just below the trends buttons on the process details screen.

5.1.31 **IF** fan does not start, **PERFORM** the following:

5.1.31.1 **NOTIFY** Shift Manager.

5.1.31.2 **PROCEED** as directed by Shift Manager **AND**

RECORD any direction on Comment Page.

5.1.32 **CHECK** exhauster has reached the desired flow rate.

NOTE - During this 2 min startup and stabilization phase, it is possible to receive valid alarms. (e.g. CAM Sample Flow Low Low)

5.1.33 **ACKNOWLEDGE** all alarms on HMI by selecting the HVAC Alarms tab at the top of the screen.

5.1.34 **AFTER** fan starts, **WAIT** approximately two minutes for system alarms and interlocks to become enabled.

5.1.35 **ENSURE** system interlocks are enabled by viewing the text display just below the Trends labeled "Interlocks Enabled" on the Exhauster Process Details screen (EV-02-10 for A-Train or EV-02-20 for B-Train).

5.1.36 **IF** cleared alarms return after acknowledging them, **NOTIFY** Shift Manager.

5.1.37 **CHECK** glycol level on HMI using indicator for appropriate exhauster train listed below;

Train	EIN
A	LI-370
B	LI-470

5.1.37.1 **IF** level dropped below 45%, **FILL/RE-FILL** glycol tank per Section 5.7 to level between 45% - 75% (TK-370 for A-Train or TK-470 for B-Train).

5.1 Start Up Primary Ventilation System (Cont.)

5.1.38 **NAVIGATE** to the Tank Farms Pressure Transmitters screen (EV-02-03) by selecting the AW Exhausters Overview button in the upper left corner of the AW Exhausters Process Details screen.

5.1.39 **SELECT** "AW Tank Farm" button.

5.1.40 **CHECK** all tank pressures are between -3.5 and -0.7 in. WG, indicated on HMI screen "AW Tank Farm – Tank Pressure Transmitters".

5.1.41 **NOTIFY** Shift Manager, 242-A Shift Manager, and TMACS exhauster EF-009 (A-Train) or EF-010 (B-Train) has been started.

5.1.42 **AFTER** primary exhaust train is running and equipment dPs and tank pressures have stabilized **RECORD** AW tank pressure and primary ventilation data per TF-OR-DR-EV.

5.1.42.1 **REPORT** to Shift Manager any indications out of range per TF-OR-DR-EV.

5.1.43 **IF** Steps 5.1.16 through 5.1.42 were performed to connect temporary power per Step 5.10.3 **GO TO** Step 5.10.4.

5.1.44 **CHECK** CAM/Record Sampler inspection per TF-OPS-005 and TF-OPS-031 has been completed satisfactorily for train that has been started.

5.2 Shutdown Primary Ventilation System

5.2.1 **ENSURE** LOGIN to the TFLAN connected workstation or local HMI as "AWExhop".

5.2.2 **NOTIFY** Shift Manager, 242-A Shift Manager, and TMACS exhauster EF-009 (A-Train) or EF-010 (B-Train) will be shut down.

5.2.3 **CHECK** no waste disturbing activities are being performed in AW Farm.

5.2.4 **SHUT DOWN** operating primary fan by selecting AW Sequence button AW Sequence in the upper left hand corner of the process screen.

5.2.5 **SELECT** exhauster to stop .

5.2.5.1 **CLICK** on ENTER .

NOTE - Performing Steps 5.2.6 and 5.2.6.1 puts the exhauster selected into an automatic shutdown sequence. Devices required to run the exhauster will be turned off.

5.2.6 **SELECT** that exhauster red stop button or .

5.2.6.1 **CLICK** on ENTER .

5.2.7 **ENSURE** the exhauster has shut down by verifying the stack flow reading (FI-551 for A Train or FI-651 for B Train) is 0 SCFM.

5.2.8 **NOTIFY** Shift Manager, 242-A Shift Manager, and TMACS exhauster EF-009 (A-Train) or EF-010 (B-Train) has been shut down.

5.3 Stack Flow Setpoint Adjustment

NOTE - Adjustment of stack flow may be necessary for support of quarterly ANSI N13.1-1999 Compliance maintenance activities.

5.3.1 **IF** directed by Shift Manager, **ADJUST** stack flow as follows:

5.3.1.1 **ENSURE** LOGIN to the TFLAN connected workstation or local HMI as "AWExhop".

5.3.1.2 **SELECT** either "AW Exhauster A" button or "AW Exhauster B" button (depending on which exhauster is to be adjusted).

5.3.1.3 **SELECT desired** exhaust fan "EF_009_PID" button

for A Train or "EF_0010_PID" button

for B Train.

5.3.1.4 **EXPAND** the fan faceplate by selecting the three button bar .

5.3.1.5 **SELECT** internal set point "Int Sp" **AND**

ADJUST to the desired setpoint as directed by the shift manager.

a. **CLICK** on ENTER .

5.4 Routine Switching of Exhaust Fans and Maintenance Activities

5.4.1 **ENSURE** LOGIN to the TFLAN connected workstation or local HMI as "AWExhop".

5.4.2 **CHECK** de-entrainer seal pot level LI-170 (located in field or on de-entrainer HMI screen) is above 40%.

5.4.2.1 **IF** level is not within range, **NOTIFY** Shift Manager **AND**

AS directed by Shift Manager, **FILL/RE-FILL** de-entrainer seal pot per Section 5.8.

5.4.3 **CHECK** in field or on HMI the seal pot level, using indicator listed below for appropriate exhauster train, is greater than 30%.

Train	EIN-HMI	EIN-Field
A	LI-380	AW241-VTP-SG-380
B	LI-480	AW241-VTP-SG-480

5.4.3.1 **IF** level is not within range, **FILL/REFILL** seal pot to appropriate level per Section 5.8.

5.4.4 **CHECK** in field or on HMI the glycol level, using indicator listed below for appropriate exhauster train, is between 45% - 75%.

Train	EIN-HMI	EIN-Field
A	LI-370	AW241-VTP-LG-370
B	LI-470	AW241-VTP-LG-470

5.4.4.1 **IF** level is not within range, **FILL/REFILL** glycol tank to appropriate level per Section 5.7.

5.4.5 **CHECK** no active alarms are present on HMI alarms page for this exhauster by selecting the HVAC Alarms tab at the top of the screen.

5.4.5.1 **IF** active alarms are present (ACT), **RESPOND** per ARP-T-231-EXH(A) or ARP-T-231-EXH(B) as applicable.

5.4.6 **IF** exhauster will be run in CAM Bypass, **PERFORM** Section 5.12 **AND**

GO TO Step 5.4.7.

5.4 Routine Switching of Exhaust Fans and Maintenance Activities (Cont.)

5.4.7 **IF** exhauster will NOT be run in CAM Bypass, **ENSURE** Primary Exhaust CAM, AW241-VTP-RT-554/654, Beta/Gamma Monitor is ON,

OR

CONFIRM HMI indications for RAH-554/654 and RAX-554/654 display "NORMAL".

NOTE - Adjusting exhauster flow rate may cause pressurization alarm.

5.4.8 **ADJUST** running exhauster flow rate as follows:

NOTE - The following steps slow down the currently running exhauster and set the exhauster to run at a lower speed during the cross over sequence.

5.4.8.1 **SELECT** desired exhaust fan "EF_009_PID" button 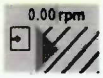

for A Train or "EF_0010_PID" button

for B Train.

5.4.8.2 **EXPAND** the fan faceplate by selecting the three button bar .

5.4.8.3 **SELECT** internal set point "Int Sp".

5.4.8.4 **ADJUST** exhauster PID controller to 750 SCFM, or as directed by Shift Manager.

5.4.8.5 **CLICK** on ENTER .

5.4.8.6 **ENSURE** internal set point "Int Sp" is the desired stack flow.

a. **IF** internal set point "Int Sp" is not at the desired stack flow, **REPEAT** Steps 5.4.8.3 to 5.4.8.6.

5.4.8.7 **REPEAT** Steps 5.4.8.1 through 5.4.8.6 for the exhaust train that will be started.

5.4.9 **ENSURE** the running exhauster stack flow indication at the HMI is at a flow matching the set point provided by the Shift Manager in Step 5.4.8.3.

5.4 Routine Switching of Exhaust Fans and Maintenance Activities (Cont.)

WARNING

Switching or starting fans that have been down for an extended period may cause condensate to be blown out of the stack. Personnel notifications need to be done to clear the immediate area PRIOR to switching or startup of the system to avoid potential personnel contamination.

5.4.10 **CHECK** all non-essential personnel have cleared the immediate area.

5.4.11 **OPEN** the following exhaust fan drain valve for two minutes for the fan being started to ensure any rain water or condensation collected in the fan housing is drained **AND THEN**

CLOSE the exhaust fan drain valve for the fan being started.

Train	EIN
Train A Drain Valve	AW241-VTP-V-369
Train B Drain Valve	AW241-VTP-V-469

5.4.12 **NOTIFY** Shift Manager, 242-A Shift Manager, and TMACS which exhauster will be shut down and which exhauster will be started.

5.4.13 **SELECT** the "AW Sequence" button AW Sequence from the process details display of the exhauster running.

5.4.14 **IF** A-Train is running and switching to B-Train, **SELECT** A2B button.

OR

IF B-Train is running and switching to A-Train, **SELECT** B2A button.

5.4.15 **CLICK** on ENTER.

5.4 Routine Switching of Exhaust Fans and Maintenance Activities (Cont.)

NOTE - At fan startup, some interlocks and alarms will be suppressed for approximately two minutes to allow exhauster to stabilize.

- Both fans will be running in this sequence until interlocks are active on the exhauster to be started. This will take approximately 3 minutes.

5.4.16 **CONFIRM** the selected fan starts.

5.4.17 **ACKNOWLEDGE** all alarms on HMI alarm.

5.4.18 **AFTER** fan starts, **WAIT** approximately two minutes for alarm interlock to become ENABLED.

5.4.19 **CONFIRM** selected fan shuts down.

5.4.20 **IF** cleared alarms return after acknowledging them, **NOTIFY** Shift Manager.

5.4.21 **IF** both exhausters are running for more than 5 minutes, **GO TO** Section 5.2 and shut down exhaust train that was previously running **AND**

NOTIFY Shift Manager.

5.4.22 **IF** crossover exhauster does not start, **NOTIFY** Shift Manager **AND**

PROCEED as directed.

5.4.23 **REQUEST** operating flow rate from Shift Manager.

5.4.23.1 **SELECT** exhaust fan "EF_009_PID" button

.

5.4.23.2 **EXPAND** the fan faceplate by selecting the three button bar .

5.4.23.3 **SELECT** internal set point "Int Sp".

5.4.23.4 **ADJUST** exhauster PID controller as directed by Shift Manager.

5.4.23.5 **CLICK** on ENTER .

5.4.23.6 **ENSURE** internal set point "Int Sp" is the desired stack flow.

a. **IF** internal set point "Int Sp" is not at the desired stack flow, **REPEAT** Steps 5.4.23.3 to 5.4.23.6.

5.4 Routine Switching of Exhaust Fans and Maintenance Activities (Cont.)

5.4.24 **CHECK** glycol level on HMI using indicator for appropriate exhauster train listed below **AND**

IF level dropped below 45%, **FILL/RE-FILL** glycol tank per Section 5.7 to level between 45% - 75%.

Train	EIN HMI
A	LI-370
B	LI-470

5.4.25 **CHECK** all tank pressures are between -3.5 and -0.7 in. WG, indicated on HMI screen "AW Tank Farm - Tank Pressure Transmitters".

5.4.26 **AFTER** primary exhaust train is running and equipment dPs and tank pressures have stabilized **RECORD** AW tank pressure and primary ventilation data per TF-OR-DR-EV.

5.4.26.1 **REPORT** to Shift Manager any indications out of range per TF-OR-DR-EV.

5.4.27 **CHECK** CAM/Record Sampler inspection per TF-OPS-005 and TF-OPS-031 is completed satisfactorily for train that has been started.

5.4.28 **NOTIFY** Shift Manager, 242-A Shift Manager, and TMACS of fan switch and specify which exhaust fan has been started and which fan has been shut down.

5.5 Short Term Shut Down of A or B Train Primary Ventilation

5.5.1 **NOTIFY** Shift Manager, 242-A Shift Manager and TMACS, exhauster is about to be shut down, EF-009 (A-Train) or EF-010 (B-Train), as appropriate.

5.5.2 **CHECK** Shift Manager has notified Environmental exhaust fans will be shut down during performance of this activity.

5.5.3 **CHECK** no waste disturbing activities are being performed in AW farm.

5.5.4 **ENSURE** LOGIN to the TFLAN connected workstation or local HMI as "AWExhop".

NOTE - This step will start the automatic shutdown sequence for the exhauster selected.

5.5.5 **SHUT DOWN** operating primary train by selecting the AW Sequence button AW Sequence from the AW Exhauster Process Detail screen.

5.5.6 **SELECT** exhauster to stop .

5.5.6.1 **CLICK** on ENTER .

NOTE - Performing Steps 5.5.7 and 5.5.7.1 puts the exhauster selected into an automatic shutdown sequence. Devices required to run the exhauster will be turned off.

5.5.7 **SELECT** that exhauster red stop button or .

5.5.7.1 **CLICK** on ENTER .

5.5.8 **ENSURE** the exhauster has shut down by verifying the stack flow reading (FI-551 for A Train or FI-651 for B Train) is 0 SCFM.

5.5.9 **NOTIFY** Shift Manager, 242-A Shift Manager, and TMACS which exhauster has been shut down, EF-009 (A-Train) or EF-010 (B-Train), as appropriate.

5.5.10 **IF** connecting a temporary power source to the shutdown exhaust train, **GO TO** Section 5.10.

5.6 Re-Start After Short Term Shutdown of Primary Ventilation

NOTE - The intent of this section is to allow re-start of primary ventilation if system has not exceeded inoperability time limit established by Shift Manager.

5.6.1 **ENSURE** LOGIN to the TFLAN connected workstation or local HMI as "AWExhop".

5.6.2 **NOTIFY** Shift Manager, 242-A Shift Manager, and TMACS exhauster EF-009 (A-Train) or EF-010 (B-Train) will be started.

5.6.3 **WHEN** directed by Shift Manager/OE, **START** Primary ventilation as follows:

5.6.3.1 **ESTABLISH** either A or B train to be placed in service.

Check
(✓)

_____ A-Train

_____ B-Train

5.6.3.2 **CHECK** desired de-entrainer is valved in and ready for operation per Steps 5.1.13 and 5.1.14.1

5.6.4 **CHECK** de-entrainer seal pot level LI-170 (located in field or on de-entrainer HMI screen) is above 40%.

5.6.4.1 **IF** level is not within range, **NOTIFY** Shift Manager **AND**

AS directed by Shift Manager, **FILL/RE-FILL** de-entrainer seal pot per Section 5.8.

5.6.5 **CHECK** in field or on HMI, the seal pot level is greater than 30%, using indicator listed below for appropriate exhauster train.

Train	EIN-HMI	EIN-Field
A	LI-380	AW241-VTP-SG-380
B	LI-480	AW241-VTP-SG-480

5.6.5.1 **IF** level is not within range, **FILL/REFILL** seal pot to appropriate level per Section 5.8.

5.6 Re-Start After Short Term Shutdown of Primary Ventilation (Cont.)

5.6.6 **CHECK** in field or on HMI, the glycol level, using indicator listed below for appropriate exhauster train, is between 45% - 75%.

Train	EIN-HMI	EIN-Field
A	LI-370	AW241-VTP-LG-370
B	LI-470	AW241-VTP-LG-470

5.6.6.1 **IF** level is not within range, **FILL/REFILL** glycol tank to appropriate level per Section 5.7.

5.6.7 **IF** exhauster will be run in CAM Bypass, **PERFORM** Section 5.12 **AND**

GO TO Step 5.6.9.

5.6.8 **IF** exhauster will not be run in CAM Bypass, **ENSURE** Primary Exhaust CAM, AW241-VTP-RT-554/654, Beta/Gamma Monitor is ON,

OR

CONFIRM HMI indications for RAH-554/654 and RAX-554/654 display "NORMAL".

WARNING

Switching or starting fans that have been down for an extended period may cause condensate to be blown out of the stack. Personnel notifications need to be done to clear the immediate area PRIOR to switching or startup of the system to avoid potential personnel contamination.

5.6.9 **CHECK** all non-essential personnel have cleared the immediate area.

5.6.10 **OPEN** the following exhaust fan drain valve for two minutes for the fan being started to ensure any rain water or condensation collected in the fan housing is drained **AND THEN**

CLOSE the exhaust fan drain valve for the fan being started.

Train	EIN
Train A Drain Valve	AW241-VTP-V-369
Train B Drain Valve	AW241-VTP-V-469

5.6 Re-Start After Short Term Shutdown of Primary Ventilation (Cont.)

5.6.11 **REQUEST** operating flow rate from Shift Manager.

5.6.12 **IF** flow rate is required to be changed, **PERFORM** the following:

5.6.12.1 **SELECT** exhaust fan "PID" button

.

5.6.12.2 **EXPAND** the fan faceplate by selecting the three button bar
.

5.6.12.3 **SELECT** internal set point "Int Sp".

5.6.12.4 **ADJUST** to the desired setpoint as directed by the Shift Manager.

5.6.12.5 **CLICK** on ENTER
.

5.6.12.6 **ENSURE** internal set point "Int Sp" is the desired stack flow.

a. **IF** internal set point "Int Sp" is not at the desired stack flow, **REPEAT** Step 5.6.12.3 to 5.6.12.6.

5.6.13 **OPEN** "AW Sequence"

in the upper left corner of the process screen.

5.6.14 **SELECT** exhauster indicated in Step 5.6.3.1 to run
.

5.6.14.1 **CLICK** on ENTER
.

NOTE - When Steps 5.6.15 and 5.6.15.1 are performed, the exhauster selected will enter an automatic startup sequence. Devices required to run the exhauster will be set to "Auto" and the glycol pump will begin to run. Upon completion of the glycol preheat operation and when Glycol tank Temperature is greater than 110°F, the inlet valve will open and exhauster selected will start.

5.6.15 **SELECT** that exhauster green start button or .

5.6.15.1 **CLICK** on ENTER
.

5.6 Re-Start After Short Term Shutdown of Primary Ventilation (Cont.)

NOTE - At fan startup, some interlocks and alarms will be suppressed for approximately two minutes to allow exhauster to stabilize. Interlock status enabled or disabled (flashing text) will be listed just below the trends buttons on the process details screen.

5.6.16 **ENSURE** the exhauster has started by verifying the stack flow reading off the HMI (FI-551 for A Train or FI-651 for B Train) is greater than 0 SCFM.

5.6.17 **IF** fan does not start, **PERFORM** the following:

5.6.17.1 **NOTIFY** Shift Manager.

5.6.17.2 **PROCEED** as directed by Shift Manager **AND**

RECORD any direction on Comment Page.

5.6.18 **CONFIRM** exhauster has reached the desired flow rate.

5.6.19 **NOTIFY** Shift Manager, 242-A Shift Manager, and TMACS exhauster EF-009 (A-Train) or EF-010 (B-Train) has been started.

5.7 Glycol Tank Filling and Draining

NOTE - Glycol Pump control, glycol heater, and glycol gauges are displayed on Exhauster Process Detail HMI screens.

5.7.1 **IF** glycol level is above 75%, **GO TO** Step 5.7.8 for draining.

5.7.2 **CHECK** plugs in glycol drain and vent valves identified below are tight.

Train	EIN
A	AW241-VTP-V-370
	AW241-VTP-V-375
B	AW241-VTP-V-470
	AW241-VTP-V-475

5.7.3 **POSITION** glycol valves as indicated below for appropriate train **AND**

INITIAL appropriate block as each valve is verified or positioned.

A-Train			B-Train		
Valves	Position	Initial	Valves	Position	Initial
V-370	CLOSED		V-470	CLOSED	
V-371	OPEN		V-471	OPEN	
V-372	OPEN		V-472	OPEN	
V-373	OPEN		V-473	OPEN	
V-374	OPEN		V-474	OPEN	
V-375	CLOSED		V-475	CLOSED	
V-376	OPEN		V-476	OPEN	
V-377	CLOSED		V-477	CLOSED	

5.7.4 **DON** appropriate PPE before handling glycol.

- Surgical/Nitrile gloves
- Goggles or face shield with goggles.

5.7.5 **SLOWLY FILL** appropriate glycol reservoir tank (AW241-VTP-TK-370 for A-Train or AW241-VTP-TK-470 for B-Train) with 50/50 solution of water and propylene glycol until level is 45% to 65%.

5.7.5.1 **IF** unable to clearly read sight glass level, **ADD** green food color until a green shade is noticed in sight glass.

5.7.6 **IF** glycol level is 45% - 75%, **RETURN** to applicable Section.

5.7.7 **IF** glycol level is above 75%, **PROCEED** to drain of fluid as needed.

5.7 Glycol Tank Filling and Draining (Cont.)

Partial Drain

5.7.8 **STOP** applicable glycol heater identified below, as required.

Train	EIN
A	AW241-VTP-HTR-372
B	AW241-VTP-HTR-472

5.7.9 **WAIT** for glycol temperature to fall below 100°F.

Train	EIN
A	AW241-VTP-TI-373
B	AW241-VTP-TI-473

5.7.10 **STOP** applicable glycol recirc pump identified below, as required.

Train	EIN
A	AW241-VTP-P-371
B	AW241-VTP-P-471

5.7.11 **POSITION** appropriate drain valve identified below to CLOSED.

Train	EIN
A	AW241-VTP-V-370
B	AW241-VTP-V-470

5.7.12 **REMOVE** drain plug from appropriate drain valve identified in table above located under associated glycol reservoir tank **AND**

CONNECT drain hose routed to drain container.

5.7 Glycol Tank Filling and Draining (Cont.)

NOTE - Drain valves AW241-VTP-V-370 and AW241-VTP-V-470 are 90° ball valves normally fully open or closed. For draining purposes, it may be opened partially to throttle flow of the solution being drained.

5.7.13 **DON** appropriate PPE before handling glycol.

- Surgical/Nitrile gloves
- Goggles or face shield with goggles.

5.7.14 **OPEN** appropriate glycol drain valve identified below.

Train	EIN
A	AW241-VTP-V-370
B	AW241-VTP-V-470

5.7.15 **WHEN** desired amount of glycol solution has drained, **CLOSE** associated drain valve opened in Step 5.7.14 above.

5.7.16 **DISCONNECT** drain hose, as applicable **AND**

INSTALL glycol drain plug removed in Step 5.7.12 in appropriate drain valve.

5.7.17 **IF** glycol level drops below 40%, **PERFORM** the following:

5.7.17.1 **OPEN** the following associated disconnect switches/breakers:

- AW241-VTP-DS-372 for A-Train or AW241-VTP-DS-472 for B-Train Heater Disconnect
- MPZ-7 glycol recirc pump disconnect.

5.7.17.2 **PROCEED** as directed by Shift Manager/OE **AND**

RECORD direction on Comment Page.

5.7.18 **WHEN** glycol level is 45% - 75%, **RETURN** to applicable section.

5.8 Seal Pot Filling

NOTE - De-entrainer seal pot is filled from A-Train or B-Train seal pot overflow.

5.8.1 **REQUEST** an HPT perform a pre-job survey of the fill valve area. (TFC-ESHQ-ENV-STD-06)

5.8.2 **POSITION** appropriate overflow valve identified below to OPEN.

Train	EIN
A	AW241-VTP-V-381
B	AW241-VTP-V-481

5.8.3 **REMOVE** plug from appropriate fill valve identified below.

Train	EIN
A	AW241-VTP-V-380
B	AW241-VTP-V-480

5.8.4 **ATTACH** funnel or fill hose to fill valve, as required.

5.8.5 **OPEN** fill valve identified in Step 5.8.3.

NOTE - The HMI will take a few seconds to register volume changes in LI-170. Approximately ½ gallon of water is needed to raise level approximately 5% (See Step 2.2.5 in Section 2.2, General Information).

5.8.6 **SLOWLY ADD** water to seal pot.

5.8.7 **WHEN** the exhauster seal pot level is approximately 50% as indicated on sight glass SG-380 [SG-480], **STOP** adding water.

OR

CONTINUE filling to increase de-entrainer seal pot level LI-170.

5.8.8 **CLOSE** appropriate fill valve opened in Step 5.8.5.

5.8.9 **REMOVE** funnel or fill hose, as applicable.

5.8.10 **REINSTALL** seal pot plug in fill valve identified from Step 5.8.3.

5.8.11 **REQUEST** HPT to perform post-job survey of fill valve area. (TFC-ESHQ-ENV-STD-06)

5.9 Seal Pot Filling SP-101 (AW inactive VTP Seal Pot)

5.9.1 **IF** directed by Shift Manager/OE, **ADD** 1 to 2 gallons of water to seal pots AW241-VTP-SP-101 as follows.

5.9.1.1 **ENSURE** tank 102-AW vapor space pressure is less than - 0.5".

5.9.1.2 **REQUEST** HPT to perform pre-job survey of fill valve area.

5.9.1.3 **IF** a stopper or cap is installed, **REQUEST** Electrician to bond stopper or cap per 2-MISC-160 prior to removing or re-installing.

5.9.1.4 **REMOVE** stopper or cap as necessary.

5.9.1.5 **OPEN** Seal Pot fill valve AW241-VTP-V-128 **AND**

ADD water.

5.9.1.6 **AFTER** water has drained into seal pot, **CLOSE** seal pot fill valve AW241-VTP-V-128.

5.9.1.7 **IF** a stopper or cap is to be re-installed, **REQUEST** Electrician to bond stopper or cap per 2-MISC-160 prior to removing or re-installing.

5.9.1.8 **INSTALL** stopper or cap as necessary.

5.9.1.9 **REQUEST** HPT to perform post-job survey of fill valve area.

5.10 Temporary Emergency Power

Shutdown/Connect Temporary Power/Operate Exhaust Train

NOTE - This section is intended to be used when conditions in the field dictate an alternate temporary power supply (i.e. to exhaust fan motor only) is needed, to keep the primary ventilation system running during a planned AW-Farm electrical maintenance outage.

- This section is used in conjunction with a temporary Engineering Change Notification and/or other approved documentation (e.g. work package), that identifies the field configuration power supply changes. Because this section deviates from the normal routine of operating the ventilation system, a work package will be used to address additional hazards and field isolation points.

5.10.1 **CONFIRM** appropriate exhauster train has been shutdown in accordance with Section 5.5.

5.10.2 **VERIFY** temporary power supply has been connected to appropriate exhaust train in accordance with an approved work package.

_____ / _____ / _____

Signature Print Date
Shift Manager /OE

5.10.3 **RESTART** exhaust train on temporary power in accordance with Steps 5.1.16 through 5.1.42.

Shutdown Exhaust Train and Disconnect Temporary Power Source

5.10.4 **WHEN** directed by Shift Manager/OE, **SHUTDOWN** appropriate exhaust train in accordance with Section 5.5.

5.10.5 **VERIFY** temporary power supply has been disconnected from appropriate exhaust train in accordance with an approved work package.

_____ / _____ / _____

Signature Print Date
Shift Manager /OE

5.10.6 **RESTART** exhaust train on normal power in accordance with Steps 5.1.16 through 5.1.42.

5.11 Operate Primary Tank Inlet Stations

NOTE - Steps within Section 5.11 may be performed in any logical order or omitted at Shift Manager/OE direction, after verification of applicable prerequisites.

- The bypass line ball valves listed in Table 8 shall remain CLOSED at all times unless otherwise specified by the ventilation engineer.

5.11.1 **VERIFY** Shift Manager/OE has identified specific primary tank inlet station(s) that will be involved in current activity **AND**

IDENTIFIED restrictions and requirements.

Tank Primary Inlet Station(s): _____

_____ / _____ / _____

Signature Print Date
Shift Manager /OE

5.11.2 **ISOLATE** identified primary tank inlet station as follows:

Check
Done ✓

_____ 5.11.2.1 **CLOSE** associated isolation butterfly valve(s) (see Figure 4 and Figure 5) referenced in Table 8.

_____ 5.11.2.2 **MAINTAIN** tank vacuums between -0.7 to -3.5 in. WG by monitoring either the local tank pressure transmitters or the HMI as desired. (OSD-T-151-00007)

NOTE - When waste disturbing activities are in progress, adjusting tape on central pump pit is prohibited.

_____ 5.11.2.3 **IF** directed by Shift Manager/OE, **CHECK** no waste disturbing activities are in progress **AND**

ADJUST tape on central pump pit, as necessary.

5.11 Operate Primary Tank Inlet Stations (Cont.)

5.11.3 **INSPECT AND CLEAN** air flow controller as follows:

Check Done ✓

_____ 5.11.3.1 **CHECK** inlet station is ISOLATED per Step 5.11.2.

_____ 5.11.3.2 **REMOVE** filter screens (with captured filter media).

_____ 5.11.3.3 **PERFORM** the following actions in order:

a. **INSPECT** & clean,

b. **CHANGE** parts out as required (e.g., orifice plate).

5.11.4 **IF** required, **REMOVE** port controller as follows:

_____ 5.11.4.1 **REMOVE** ¼" stop bolts from air flow controller housing **AND**

GENTLY GUIDE port controller down and out of housing (see Figure 7).

_____ 5.11.4.2 **PERFORM** required cleaning or work on flow controller.

_____ 5.11.4.3 **GUIDE** port controller gently up into air flow controller housing, **INSTALL** stop bolts hand tight **AND**

GENTLY GUIDE port controller down so it rests on stop bolts.

_____ 5.11.4.4 **INSTALL** filter screens (with captured filter media).

5.11.5 **PLACE** a primary tank inlet station on line as follows:

_____ 5.11.5.1 **OPEN** appropriate tank inlet station isolation butterfly valve per Table 8 (See Figure 5).

_____ 5.11.5.2 **CONFIRM** air flow controller operation by looking through view port on flow controller.

_____ 5.11.5.3 **CHECK** no dirt, debris, or ice is located inside of flow controller.

_____ 5.11.5.4 **CHECK** port controller is levitating and exhibits a slight buoyant, floating, or rocking motion (see Figure 6).

5.11 Operate Primary Tank Inlet Stations (Cont.)

Check Done ✓

_____ 5.11.5.5 **IF** no motion is observed, **CYCLE** appropriate isolation butterfly valve identified in Table 8 **AND**

CONFIRM port controller drops freely to its resting position and resumes levitation.

_____ 5.11.5.6 **MAINTAIN** tank vacuums between -0.7 to -3.5 in. WG by MONITORING either local tank pressure transmitters or HMI. **(OSD-T-151-00007)**

_____ 5.11.5.7 **IF DIRECTED** by Shift Manager/OE, **CHECK** no waste disturbing activities are in progress **AND**

CORRECT tape on central pump pit that was adjusted, as necessary.

5.12 Place Exhauster in CAM Bypass Mode

NOTE - Exhauster should be operated in CAM BY-PASS mode only when performing maintenance and/or RadCon routines.

- Running system in CAM bypass requires notification of Environmental.

5.12.1 **OBTAIN** permission from Shift Manager to operate running exhauster in CAM Bypass Mode.

5.12.2 **LOG ON** to HMI that is being placed in CAM Bypass.

5.12.3 **INSERT AND TURN** CAM interlock key **AND**

PUSH appropriate CAM Bypass button as listed below:

Train	Bypass button
A	AW241-VTP-PB-554
B	AW241-VTP-PB-654

5.12.4 **REMOVE** CAM interlock key.

5.12.5 **NAVIGATE** to the Exhauster AMS-4 screen.

5.12.6 **CONFIRM** the "CAM Bypass Active" text is displayed.

5.13 Remove Exhauster from CAM Bypass Mode

5.13.1 **IF** not logged in, **LOG** onto any HMI that interfaces with exhauster to be taken out of CAM Bypass mode.

5.13.2 **GO TO** appropriate stack monitor screen.

5.13.3 **CLICK** on AMS-4 button.

NOTE - The "CAM Bypass Active" message will flash on the HMI screen when in the Bypass mode.

5.13.4 **CLICK** on AWA-HS-554 or AWB-HS-654 to open the object faceplate.

5.13.5 **EXPAND** the fan faceplate by selecting the three button bar .

5.13.6 **SELECT** Alarm/Event tab.

5.13.7 **SELECT** Reset button in "Diff" group box.

5.13.7.1 **CLICK** on ENTER .

5.13.8 **CONFIRM** the "CAM Bypass Inactive" text is displayed.

5.13.9 **NOTIFY** Shift Manager exhauster has been removed from CAM Bypass mode.

5.14 Manually Switch Operating Sample Pumps

5.14.1 **IF** not already logged in, **LOGIN** to an HMI.

5.14.2 **NAVIGATE** to the desired exhauster screen.

5.14.3 **SELECT** sample system button.

5.14.4 **SELECT** Duty Standby object located between the two vacuum pumps.

5.14.5 **ENSURE** the currently running pump is identified as duty,

OR

SELECT it as duty.

5.14.6 **CLICK** on ENTER .

5.14.7 **ENSURE** pump not running is in auto mode.

5.14.8 **PLACE** running pump in manual mode.

5.14.9 **STOP** running pump.

5.14.10 **CONFIRM** desired sample pump is operating.

5.14.11 **CONFIRM** flow rates for Record Sampler and CAM are correct.

5.15 Records

NOTE - The following records are generated during the performance of this procedure:

5.15.1 **VERIFY** the complete records have been submitted to Operations for record retention.

_____ / _____ / _____

Signature Print Date

- Steps 4.3.1 to 4.3.6
- Steps 5.1.12, 5.6.3.1, and 5.7.3
- Steps 5.10.2, 5.10.5, 5.11.1, and 5.15.1
- Table 1 through Table 6 and Table 8
- Comment Page (if filled in).
- Signature Sheet

The record custodian identified in the company-level Records Inventory and Disposition Schedule (RIDS) is responsible for record retention in accordance with TFC-BSM-IRM_DC-C-02.

Table 1 - De-Entrainer Valve Line-Up HMI Valves

DE-ENTRAINER	VALVE*	DESCRIPTION*	POSITION	Initial for HMI Position
Valve Line-up if ONLY using AW241-VTP-DE-005				
DE-005	V-150	Pri Exh Demister 005 Inlet Isolation Valve	OPEN	
	V-153	Pri Exh Demister 005 Outlet Isolation Valve	OPEN	
	V-160	Pri Exh Demister 006 Inlet Isolation Valve	CLOSED	
	V-163	Pri Exh Demister 006 Outlet Isolation Valve	CLOSED	
Valve Line-up if ONLY using AW241-VTP-DE-006				
DE-006	V-150	Pri Exh Demister 005 Inlet Isolation Valve	CLOSED	
	V-153	Pri Exh Demister 005 Outlet Isolation Valve	CLOSED	
	V-160	Pri Exh Demister 006 Inlet Isolation Valve	OPEN	
	V-163	Pri Exh Demister 006 Outlet Isolation Valve	OPEN	

*NOTE - Prefix all EINs with AW241-VTP-

Table 2 - De-Entrainer Valve Line-Up Non-HMI Valves

DE-ENTRAINER	VALVE*	DESCRIPTION*	POSITION	Initial
Valve Line-up if ONLY using AW241-VTP-DE-005				
DE-005	V-151	Pri Exh Demister 005 Spray Down Iso Valve	CLOSED	
	V-157	Pri Exh Demister 005 Drain Line Iso Valve	OPEN	
	V-158	Pri Exh Demister 005 Drain Line Iso Valve	OPEN	
	V-190	Pri Exh Demister 005 Drain Line Iso Valve	CLOSED	
	V-154	AW241-VTP-PDIT-152 Hi Side Iso Valve	OPEN	
	V-155	AW241-VTP-PDIT-152 Equalizing Valve	CLOSED	
	V-156	AW241-VTP-PDIT-152 Lo Side Iso Valve	OPEN	
	V-192	AW241-VTP-PDIT-152 Isolation Valves	OPEN	
	V-193	AW241-VTP-PDIT-152 Isolation Valves	OPEN	
Valve Line-up if ONLY using AW241-VTP-DE-006				
DE-006	V-161	Pri Exh Demister 006 Spray Down Iso Valve	CLOSED	
	V-167	Pri Exh Demister 006 Drain Line Iso Valve	OPEN	
	V-168	Pri Exh Demister 006 Drain Line Iso Valve	OPEN	
	V-191	Pri Exh Demister 006 Drain Line Iso Valve	CLOSED	
	V-164	AW241-VTP-PDIT-162 Hi Side Iso Valve	OPEN	
	V-165	AW241-VTP-PDIT-162 Equalizing Valve	CLOSED	
	V-166	AW241-VTP-PDIT-162 Lo Side Iso Valve	OPEN	
	V-194	AW241-VTP-PDIT-162 Isolation Valves	OPEN	
	V-195	AW241-VTP-PDIT-162 Isolation Valves	OPEN	

(Continued on Next Page)

Table 2 - De-Entrainer Valve Line-Up Non-HMI Valves (Cont.)

DE-ENTRAINER	VALVE*	DESCRIPTION*	POSITION	Initial
Valve Line-up if using BOTH AW241-VTP-DE-005 and AW241-VTP-DE-006				
DE-005 And DE-006	V-151	Pri Exh Demister 005 Spray Down Iso Valve	CLOSED	
	V-161	Pri Exh Demister 006 Spray Down Iso Valve	CLOSED	
	V-157	Pri Exh Demister 005 Drain Line Iso Valve	OPEN	
	V-158	Pri Exh Demister 005 Drain Line Iso Valve	OPEN	
	V-190	Pri Exh Demister 005 Drain Line Iso Valve	CLOSED	
	V-167	Pri Exh Demister 006 Drain Line Iso Valve	OPEN	
	V-168	Pri Exh Demister 006 Drain Line Iso Valve	OPEN	
	V-191	Pri Exh Demister 006 Drain Line Iso Valve	CLOSED	
	V-171	Pri Exh Seal Pot 170 Vent Line Iso Valve	OPEN	
	V-172	Pri Exh Seal Pot 170 Flush Conn Iso Valve	CLOSED	
	V-154	AW241-VTP-PDIT-152 Hi Side Iso Valve	OPEN	
	V-155	AW241-VTP-PDIT-152 Equalizing Valve	CLOSED	
	V-156	AW241-VTP-PDIT-152 Lo Side Iso Valve	OPEN	
	V-164	AW241-VTP-PDIT-162 Hi Side Iso Valve	OPEN	
	V-165	AW241-VTP-PDIT-162 Equalizing Valve	CLOSED	
	V-166	AW241-VTP-PDIT-162 Lo Side Iso Valve	OPEN	
	V-192	AW241-VTP-PDIT-152 Isolation Valves	OPEN	
	V-193	AW241-VTP-PDIT-152 Isolation Valves	OPEN	
	V-194	AW241-VTP-PDIT-162 Isolation Valves	OPEN	
	V-195	AW241-VTP-PDIT-162 Isolation Valves	OPEN	

*NOTE - Prefix all EINs with AW241-VTP-

Table 3 - Off-Skid Valving

EIN*	Description*	Position	Initials
AW101-WST-V-201	AW101-WST-PDIT-210 Hi Side Iso valve	OPEN	
AW101-WST-V-202	AW101-WST-PDIT-210 Lo Side Iso valve	OPEN	
AW101-WST-V-203	AW101-WST-PDIT-210 Equalizing valve	CLOSED	
AW101-WST-V-204	AW101-WST-PDIT-211 Hi Side Iso valve	OPEN	
AW101-WST-V-205	AW101-WST-PDIT-211 Lo Side Iso valve	OPEN	
AW101-WST-V-206	AW101-WST-PDIT-211 Equalizing valve	CLOSED	
AW101-WST-V-207	AW101-WST-PDIT-212 Hi Side Iso valve	OPEN	
AW101-WST-V-208	AW101-WST-PDIT-212 Lo Side Iso valve	OPEN	
AW101-WST-V-209	AW101-WST-PDIT-212 Equalizing valve	CLOSED	
AW102-WST-V-210	AW102-WST-PDIT-220 Hi Side Iso valve	OPEN	
AW102-WST-V-211	AW102-WST-PDIT-220 Lo Side Iso valve	OPEN	
AW102-WST-V-212	AW102-WST-PDIT-220 Equalizing valve	CLOSED	
AW102-WST-V-213	AW102-WST-PDIT-221 Hi Side Iso valve	OPEN	
AW102-WST-V-214	AW102-WST-PDIT-221 Lo Side Iso valve	OPEN	
AW102-WST-V-215	AW102-WST-PDIT-221 Equalizing valve	CLOSED	
AW102-WST-V-216	AW102-WST-PDIT-222 Hi Side Iso valve	OPEN	
AW102-WST-V-217	AW102-WST-PDIT-222 Lo Side Iso valve	OPEN	
AW102-WST-V-218	AW102-WST-PDIT-222 Equalizing valve	CLOSED	
AW103-WST-V-219	AW103-WST-PDIT-230 Hi Side Iso valve	OPEN	
AW103-WST-V-220	AW103-WST-PDIT-230 Lo Side Iso valve	OPEN	
AW103-WST-V-221	AW103-WST-PDIT-230 Equalizing valve	CLOSED	
AW103-WST-V-222	AW103-WST-PDIT-231 Hi Side Iso valve	OPEN	
AW103-WST-V-223	AW103-WST-PDIT-231 Lo Side Iso valve	OPEN	
AW103-WST-V-224	AW103-WST-PDIT-231 Equalizing valve	CLOSED	
AW103-WST-V-225	AW103-WST-PDIT-232 Hi Side Iso valve	OPEN	
AW103-WST-V-226	AW103-WST-PDIT-232 Lo Side Iso valve	OPEN	
AW103-WST-V-227	AW103-WST-PDIT-232 Equalizing valve	CLOSED	
AW104-WST-V-228	AW104-WST-PDIT-240 Hi Side Iso valve	OPEN	
AW104-WST-V-229	AW104-WST-PDIT-240 Lo Side Iso valve	OPEN	
AW104-WST-V-230	AW104-WST-PDIT-240 Equalizing valve	CLOSED	
AW104-WST-V-231	AW104-WST-PDIT-241 Hi Side Iso valve	OPEN	
AW104-WST-V-232	AW104-WST-PDIT-241 Lo Side Iso valve	OPEN	
AW104-WST-V-233	AW104-WST-PDIT-241 Equalizing valve	CLOSED	
AW104-WST-V-234	AW104-WST-PDIT-242 Hi Side Iso valve	OPEN	
AW104-WST-V-235	AW104-WST-PDIT-242 Lo Side Iso valve	OPEN	
AW104-WST-V-236	AW104-WST-PDIT-242 Equalizing valve	CLOSED	
AW105-WST-V-237	AW105-WST-PDIT-250 Hi Side Iso valve	OPEN	
AW105-WST-V-238	AW105-WST-PDIT-250 Lo Side Iso valve	OPEN	
AW105-WST-V-239	AW105-WST-PDIT-250 Equalizing valve	CLOSED	
AW105-WST-V-240	AW105-WST-PDIT-251 Hi Side Iso valve	OPEN	
AW105-WST-V-241	AW105-WST-PDIT-251 Lo Side Iso valve	OPEN	
AW105-WST-V-242	AW105-WST-PDIT-251 Equalizing valve	CLOSED	
AW105-WST-V-243	AW105-WST-PDIT-252 Hi Side Iso valve	OPEN	

*NOTE - Full EINs are given in this table.

Table 3 - Off-Skid Valving (Cont.)

EIN*	Description*	Position	Initials
AW105-WST-V-244	AW105-WST-PDIT-252 Lo Side Iso valve	OPEN	
AW105-WST-V-245	AW105-WST-PDIT-252 Equalizing valve	CLOSED	
AW106-WST-V-246	AW106-WST-PDIT-260 Hi Side Iso valve	OPEN	
AW106-WST-V-247	AW106-WST-PDIT-260 Lo Side Iso valve	OPEN	
AW106-WST-V-248	AW106-WST-PDIT-260 Equalizing valve	CLOSED	
AW106-WST-V-249	AW106-WST-PDIT-261 Hi Side Iso valve	OPEN	
AW106-WST-V-250	AW106-WST-PDIT-261 Lo Side Iso valve	OPEN	
AW106-WST-V-251	AW106-WST-PDIT-261 Equalizing valve	CLOSED	
AW106-WST-V-252	AW106-WST-PDIT-262 Hi Side Iso valve	OPEN	
AW106-WST-V-253	AW106-WST-PDIT-262 Lo Side Iso valve	OPEN	
AW106-WST-V-254	AW106-WST-PDIT-262 Equalizing valve	CLOSED	
AW241-VTP-V-154	AW241-VTP-PDIT-152 Hi Side Iso Valve	OPEN	
AW241-VTP-V-155	AW241-VTP-PDIT-152 Equalizing Valve	CLOSED	
AW241-VTP-V-156	AW241-VTP-PDIT-152 Lo Side Iso Valve	OPEN	
AW241-VTP-V-164	AW241-VTP-PDIT-162 Hi Side Iso Valve	OPEN	
AW241-VTP-V-165	AW241-VTP-PDIT-162 Equalizing Valve	CLOSED	
AW241-VTP-V-166	AW241-VTP-PDIT-162 Lo Side Iso Valve	OPEN	
AW241-VTP-V-171	Pri Exh Seal Pot 170 Vent Line Iso Valve	OPEN	
AW241-VTP-V-172	Pri Exh Seal Pot 170 Flush Conn Iso Valve	CLOSED	

*NOTE - Full EINs are given in this table.

Table 4 - Initial Exhaust Train Valve Line-Up

(Page 1 of 2)

Description*	A-Train			B-Train		
	EIN*	Position	Initials	EIN	Position	Initials
Inlet Valve Main Air Stream	MOV-352	CLOSED	N/A	MOV-452	CLOSED	N/A
Outlet Valve Main Air Stream	MOV-361	CLOSED	N/A	MOV-461	CLOSED	N/A
PDIT-351[451] Hi Side Isolation Valve	V-351	OPEN		V-451	OPEN	
PDIT-351[451] Lo Side Isolation Valve	V-352	OPEN		V-452	OPEN	
PDIT-351[451] Equalizing Valve	V-353	CLOSED		V-453	CLOSED	
PDIT-354[454] Hi Side Isolation Valve	V-354	OPEN		V-454	OPEN	
PDIT-354[454] Lo Side Isolation Valve	V-355	OPEN		V-455	OPEN	
PDIT-354[454] Equalizing Valve	V-356	CLOSED		V-456	CLOSED	
PDIT-356[456] Hi Side Isolation Valve	V-357	OPEN		V-457	OPEN	
PDIT-356[456] Lo Side Isolation Valve	V-358	OPEN		V-458	OPEN	
PDIT-356[456] Equalizing Valve	V-359	CLOSED		V-459	CLOSED	
PDIT-357[457] Hi Side Isolation Valve	V-360	OPEN		V-460	OPEN	
PDIT-357[457] Lo Side Isolation Valve	V-361	OPEN		V-461	OPEN	
PDIT-357[457] Equalizing Valve	V-362	CLOSED		V-462	CLOSED	
PDIT-358[458] Hi Side Isolation Valve	V-363	OPEN		V-463	OPEN	
PDIT-358[458] Lo Side Isolation Valve	V-364	OPEN		V-464	OPEN	
PDIT-358[458] Equalizing Valve	V-365	CLOSED		V-465	CLOSED	
Seal Pot 380[480] Vent/Fill Valve	V-380	CLOSED		V-480	CLOSED	
Seal Pot 380[480] Gravity Dr Line To AW Tank Farm	V-381	OPEN		V-481	OPEN	
Seal Pot 380[480] Drain Valve	V-382	OPEN		V-482	OPEN	
Seal Pot LT-380[LT-480] Level Drain Valve	V-383	CLOSED		V-483	CLOSED	
Seal Pot LT-380[LT-480] Level Drain Valve	V-384	CLOSED		V-484	CLOSED	
Seal Pot SG-380[SG-480] Sight Glass Drain Valve	V-386	OPEN		V-486	OPEN	
Seal Pot LT-380[LT-480] Level Equalizing Valve	V-387A	CLOSED		V-487A	CLOSED	
Seal Pot LT-380[LT-480] Lo Side Level Isol. Valve	V-387B	OPEN		V-487B	OPEN	
Seal Pot LT-380[LT-480] Hi Side Level Isol. Valve	V-387C	OPEN		V-487C	OPEN	
Exhaust Fan 009[010] Drain Line Isolation Valve	V-369	CLOSED		V-469	CLOSED	
PIT-371[471] Isolation Valve	V-376	OPEN		V-476	OPEN	
PIT-371[471] Cal Port Iso Valve	V-377	CLOSED		V-477	CLOSED	
Record Sample Outlet Iso Valve (Located in ENCL-550 [ENCL-650])	V-553	OPEN		V-653	OPEN	
CAM Sample Outlet Iso Valve (Located in ENCL-550 [ENCL-650])	V-554	OPEN		V-654	OPEN	
Sample Line Condensate Drain Valve (Located below ENCL-550 [ENCL-650])	V-555	CLOSED		V-655	CLOSED	
Sample Pump 564[664] Outlet Iso Valve	V-562	OPEN		V-662	OPEN	
Sample Pump 574[674] Outlet Iso Valve	V-572	OPEN		V-672	OPEN	
*NOTE - Prefix all EINs with AW241-VTP-						

Table 4 - Initial Exhaust Train Valve Line-Up (Cont.)

Description*	A-Train			B-Train		
	EIN*	Position	Initials	EIN*	Position	Initials
Exh. Stack Flow PDIT-551[651] Hi Side Iso Valve	V-580	OPEN		V-680	OPEN	
Exh. Stack Flow PDIT-551[651] Lo Side Iso Valve	V-581	OPEN		V-681	OPEN	
Exh. Stack Flow PDIT-551[651] Equalizing Valve	V-582	CLOSED		V-682	CLOSED	
Exhaust Stack Instm Hi Side Iso Vlv	V-583	OPEN		V-683	OPEN	
Exhaust Stack Instm Lo Side Iso Vlv	V-584	OPEN		V-684	OPEN	
Exhaust Stack Hi Side Port Iso Vlv	V-585	CLOSED		V-685	CLOSED	
Exhaust Stack Lo Side Port Iso Vlv	V-586	CLOSED		V-686	CLOSED	
Glycol Tank 370[470] Drain Valve	V-370	CLOSED		V-470	CLOSED	
Glycol Loop Recirc Pump Lo Side Isolation Valve	V-371	OPEN		V-471	OPEN	
Glycol Loop Recirc Pump Hi Side Isolation Valve	V-372	OPEN		V-472	OPEN	
Glycol Tank 370[470] Level Glass Hi Side Iso Valve	V-373	OPEN		V-473	OPEN	
Glycol Tank 370[470] Level Glass Lo Side Iso Valve	V-374	OPEN		V-474	OPEN	
Glycol Loop Hi Point Vent Valve	V-375	CLOSED		V-475	CLOSED	

*NOTE - Prefix all EINs with AW241-VTP-

Table 5 - Electrical Line-Up

Description*	Train A			Train B		
	EIN*	Position	Initial	EIN*	Position	Initial
480 Volt Main Breaker	BKR-350	CLOSED (ON)		BKR-450	CLOSED (ON)	
VFD Cabinet Power Disconnect	DS-309	CLOSED (ON)		DS-410	CLOSED (ON)	
Glycol heater disconnect	DS-372	CLOSED (ON)		DS-472	CLOSED (ON)	
120 Volt circuit breakers (Located at "Mini Power Zone" DP-351 or DP-451)						
MPZ primary breaker "Main"	BKR-351	CLOSED (ON)		BKR-451	CLOSED (ON)	
MPZ secondary breaker "Secondary Main"	BKR-352 Poles 2,4	CLOSED (ON)		BKR-452 Poles 2,4	CLOSED (ON)	
Exhauster Control Cabinet VTP-ENCL-110 [111]	MPZ-1	CLOSED (ON)		MPZ-1	CLOSED (ON)	
Inlet MOV-352 [452] Outlet MOV-361 [461]	MPZ-3	CLOSED (ON)		MPZ-3	CLOSED (ON)	
ENCL-550 [650]	MPZ-5	CLOSED (ON)		MPZ-5	CLOSED (ON)	
Sampling and CAM Pumps P-564 [664], P-574 [674]	MPZ-6, 8	CLOSED (ON)		MPZ-6, 8	CLOSED (ON)	
Glycol pump P-371 [471]	MPZ-7	CLOSED (ON)		MPZ-7	CLOSED (ON)	
Duplex Convenience receptacles	MPZ-9	CLOSED (ON)		MPZ-9	CLOSED (ON)	
Exhauster Control Cabinet ENCL-110 [111]	MPZ-10	CLOSED (ON)		MPZ-10	CLOSED (ON)	
Sample Heat Trace Cabinet ENCL-104[105]	MPZ-11	CLOSED (ON)		MPZ-11	CLOSED (ON)	
GFCI Receptacle	MPZ-12	CLOSED (ON)		MPZ-12	CLOSED (ON)	
*NOTE - Prefix all EINs with AW241-VTP-						

Table 6 - Isolation Electrical Table

Description	Train A			Train B		
	EIN	Position	Initial	EIN	Position	Initial
VFD Cabinet Power Disconnect	DS-309	OPEN (OFF)		DS-410	OPEN (OFF)	
Glycol heater disconnect	DS-372	OPEN (OFF)		DS-472	OPEN (OFF)	
CAM (Inside CP-110/111)	RT-554	OFF		RT-654	OFF	
MPZ primary breaker "Main"	BKR-351	OPEN (OFF)		BKR-451	OPEN (OFF)	
MPZ secondary breaker "Secondary Main"	BKR-352 Poles 2,4	OPEN (OFF)		BKR-452 Poles 2,4	OPEN (OFF)	
480 Volt Main Breaker	BKR-350	OPEN (OFF)		BKR-450	OPEN (OFF)	
Main Transfer Switch	MTS-350	Power Source - OFF (center)		MTS-450	Power Source - OFF (center)	
*NOTE - Prefix all EINs with AW241-VTP- - Turn off breakers/disconnects in this order or as directed by Shift Manager.						

Table 7 - Inlet System Components

TANK	AIR FLOW CONTROLLER	AIR FLOW CONTROLLER INLET SCREEN dP	AIR FLOW CONTROLLER AND VACUUM BREAKER dP
TK-101-AW	AW101-VTP-FC-201	AW101-VTP-PDI-201	AW101-VTP-PDI-202
TK-102-AW	AW102-VTP-FC-202	AW102-VTP-PDI-205	AW102-VTP-PDI-206
TK-103-AW	AW103-VTP-FC-203	AW103-VTP-PDI-209	AW103-VTP-PDI-210
TK-104-AW	AW104-VTP-FC-204	AW104-VTP-PDI-213	AW104-VTP-PDI-214
TK-105-AW	AW105-VTP-FC-205	AW105-VTP-PDI-217	AW105-VTP-PDI-218
TK-106-AW	AW106-VTP-FC-206	AW106-VTP-PDI-221	AW106-VTP-PDI-222

TANK	PREFILTER	HEPA FILTER	PREFILTER dP	HEPA FILTER dP
TK-101-AW	AW101-VTP-FLT-201	AW101-VTP-FLT-202	AW101-VTP-PDI-203	AW101-VTP-PDI-204
TK-102-AW	AW102-VTP-FLT-203	AW102-VTP-FLT-204	AW102-VTP-PDI-207	AW102-VTP-PDI-208
TK-103-AW	AW103-VTP-FLT-205	AW103-VTP-FLT-206	AW103-VTP-PDI-211	AW103-VTP-PDI-212
TK-104-AW	AW104-VTP-FLT-207	AW104-VTP-FLT-208	AW104-VTP-PDI-215	AW104-VTP-PDI-216
TK-105-AW	AW105-VTP-FLT-209	AW105-VTP-FLT-210	AW105-VTP-PDI-219	AW105-VTP-PDI-220
TK-106-AW	AW106-VTP-FLT-211	AW106-VTP-FLT-212	AW106-VTP-PDI-223	AW106-VTP-PDI-224

Table 8 - Inlet System Valves

Tank/Location	Label	Description	Normal Op Position	Initial/Date	Ind.Verify Init/date
TK-101-AW	AW101-VTP-V-207	3" Bypass Line Ball Valve (Tank Inlet at Riser AW101-WST-RISER-010)	CLOSED		N/A
	AW101-VTP-V-201	Inlet Filter Station 12" Butterfly Isolation Valve (Tank Inlet at Riser AW101-WST-RISER-010)	OPEN		N/A
	AW101-VTP-V-251	Exhauster Inlet 12" Butterfly Isolation Valve off Riser AW101-WST-RISER-009	OPEN	N/A	N/A
TK-102-AW	AW102-VTP-V-208	3" Bypass Line Ball Valve (Tank Inlet at Riser AW102-WST-RISER-024)	CLOSED		N/A
	AW102-VTP-V-202	Inlet Filter Station 12" Butterfly Isolation Valve (Tank Inlet at Riser AW102-WST-RISER-024)	OPEN		N/A
	AW102-VTP-V-252	Exhauster Inlet 12" Butterfly Isolation Valve off Riser AW102-WST-RISER-010	OPEN	N/A	N/A
TK-103-AW	AW103-VTP-V-209	3" Bypass Line Ball Valve (Tank Inlet at Riser AW103-WST-RISER-009)	CLOSED		N/A
	AW103-VTP-V-203	Inlet Filter Station 12" Butterfly Isolation Valve (Tank Inlet at Riser AW103-WST-RISER-009)	OPEN		N/A
	AW103-VTP-V-253	Exhauster Inlet 12" Butterfly Isolation Valve off Riser AW103-WST-RISER-010	OPEN	N/A	N/A
TK-104-AW	AW104-VTP-V-210	3" Bypass Line Ball Valve (Tank Inlet at Riser AW104-WST-RISER-010)	CLOSED		N/A
	AW104-VTP-V-204	Inlet Filter Station 12" Butterfly Isolation Valve (Tank Inlet at Riser AW104-WST-RISER-010)	OPEN		N/A
	AW104-VTP-V-254*	Exhauster Inlet 12" Butterfly Isolation Valve off Riser AW104-WST-RISER-009	OPEN	N/A	N/A
	AW104-VTP-V-249A**	½" Remote Sensing Port Isolation Valve (Remote Sensing Line for Vacuum Relief Valve)	OPEN**		

NOTE - Inlet filter valves are positioned full open or full closed. They are not used to modulate the air flow.

* AW104-VTP-V-254 and AW106-VTP-V-256 are on the tank outlet to the ventilation side but provide a pathway for the pressure relief system in AW-104 and AW-106 to protect the other AW Farm tanks. These valves also require Shift Manager authorization to close. The V-254 and V-256 valves are not readily accessible and have been validated as OPEN.

** Shift Managers authorization is required before these valves can be closed due to pressure relief system. Independent verification requires supervisory review and signoff.

Table 8 - Inlet System Valves (Cont.)

Tank/Location	Label	Description	Normal Op Position	Initial/Date	Ind.Verify Init/date
TK-105-AW	AW105-VTP-V-211	3" Bypass Line Ball Valve (Tank Inlet at Riser AW105-WST-RISER-009)	CLOSED		N/A
	AW105-VTP-V-205	Inlet Filter Station 12" Butterfly Isolation Valve (Tank Inlet at Riser AW105-WST-RISER-009)	OPEN		N/A
	AW105-VTP-V-255	Exhauster Inlet 12" Butterfly Isolation Valve off Riser AW105-WST-RISER-010	OPEN	N/A	N/A
TK-106-AW	AW106-VTP-V-212	3" Bypass Line Ball Valve (Tank Inlet at Riser AW106-WST-RISER-009)	CLOSED		N/A
	AW106-VTP-V-206	Inlet Filter Station 12" Butterfly Isolation Valve (Tank Inlet at Riser AW106-WST-RISER-009)	OPEN		N/A
	AW106-VTP-V-256*	Exhauster Inlet 12" Butterfly Isolation Valve off Riser AW106-WST-RISER-010	OPEN	N/A	N/A
	AW106-VTP-V-250A**	½" Remote Sensing Port Isolation Valve (Remote Sensing Line for Vacuum Relief Valve)	OPEN**		
AW241-VTP-VT-M8	AW241-VTP-V-149	12" Butterfly Exhaust Inlet on Exhaust Line VT-M8	OPEN		N/A

NOTE - Inlet filter valves are positioned full open or full closed. They are NOT used to modulate the air flow.

* AW104-VTP-V-254 and AW106-VTP-V-256 are on the tank outlet to the ventilation side but provide a pathway for the pressure relief system in AW-104 and AW-106 to protect the other AW Farm tanks. These valves also require Shift Manager authorization to close. The V-254 and V-256 valves are not readily accessible and have been validated as OPEN.

** Shift Managers authorization is required before these valves can be closed due to pressure relief system. Independent verification requires supervisory review and signoff.

Reviewed by:_____ / _____ / _____

Signature Print Date

Shift Manager /OE

Comment Page

Record Any Comments Encountered During Performance of this Procedure.	Date:	

Signature Sheet

All persons participating in the performance of this procedure shall enter their printed name, signature and initials below.

Name (Printed)	Signature	Initials

Figure 1 - A-Train (AW241-VTP-EF-009) and B-Train (AW241-VTP-EF-010)

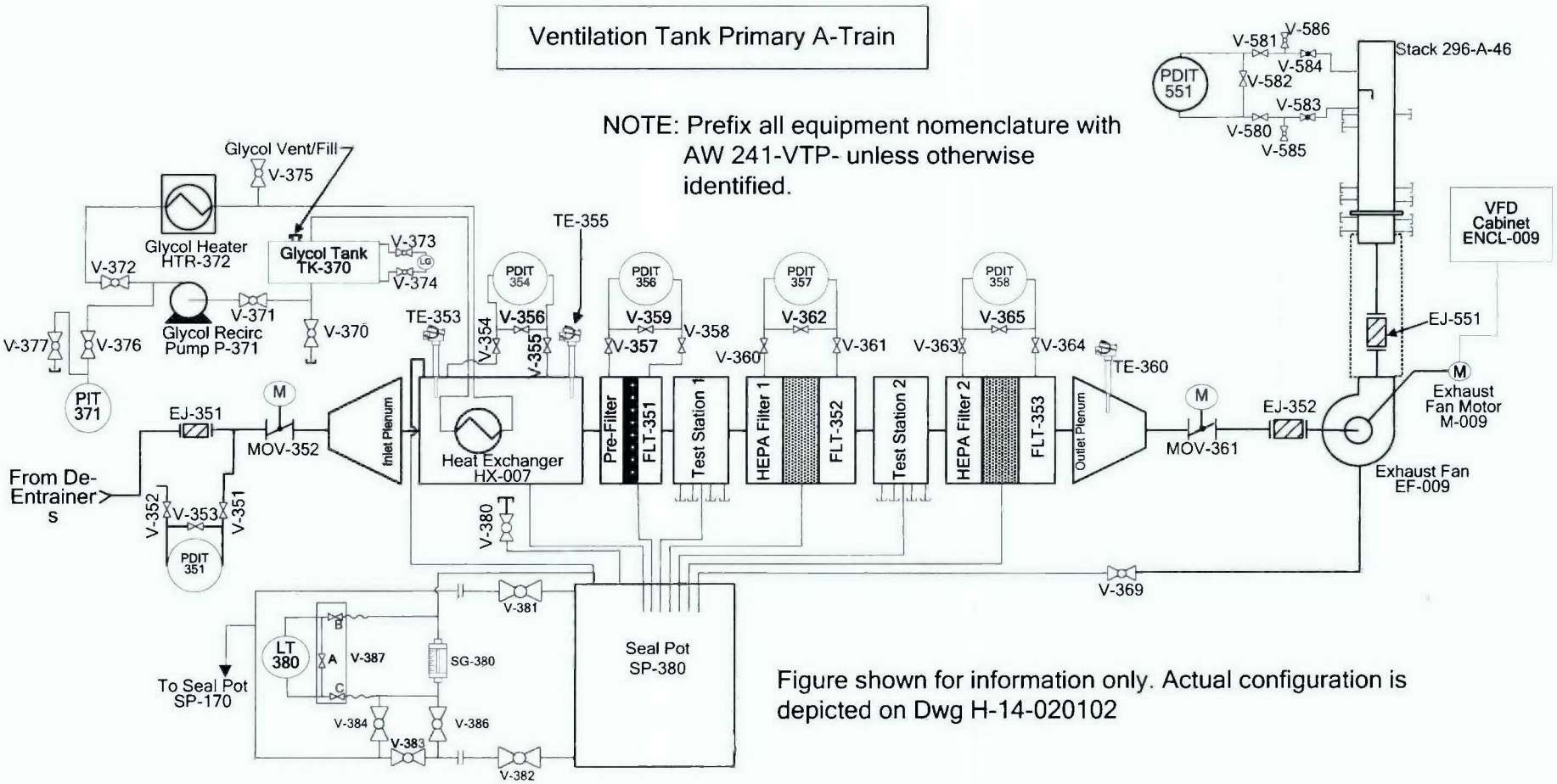

Figure shown for information only. Actual configuration is depicted on Dwg H-14-020102

Figure 1 - A-Train (AW241-VTP-EF-009) and B-Train (AW241-VTP-EF-010) (Cont.)

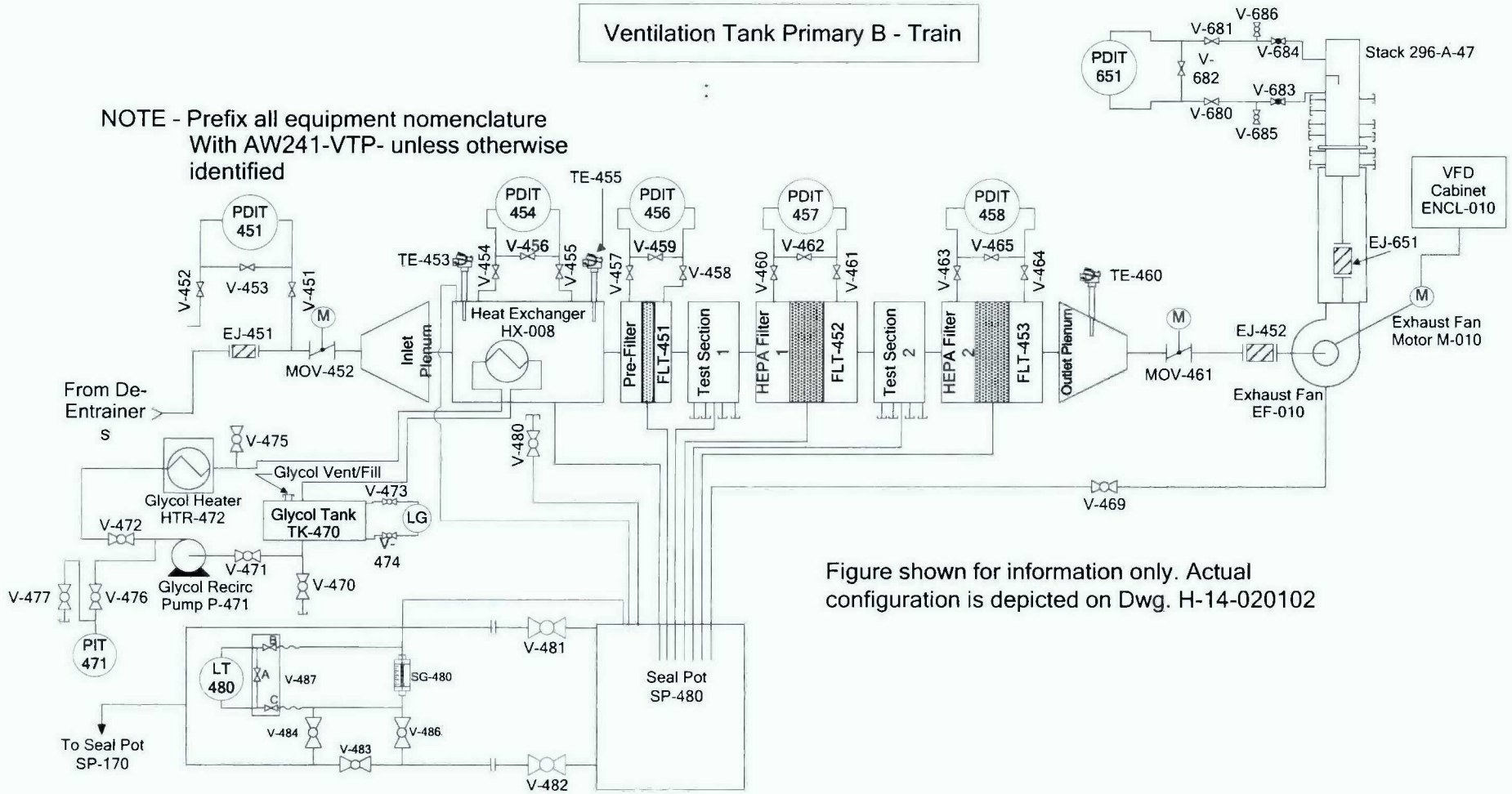

Figure 2 - Ventilation System De-Entrainer

Ventilation De-Entrainer

NOTE – Prefix all equipment nomenclature with AW241-VTP- unless otherwise identified.

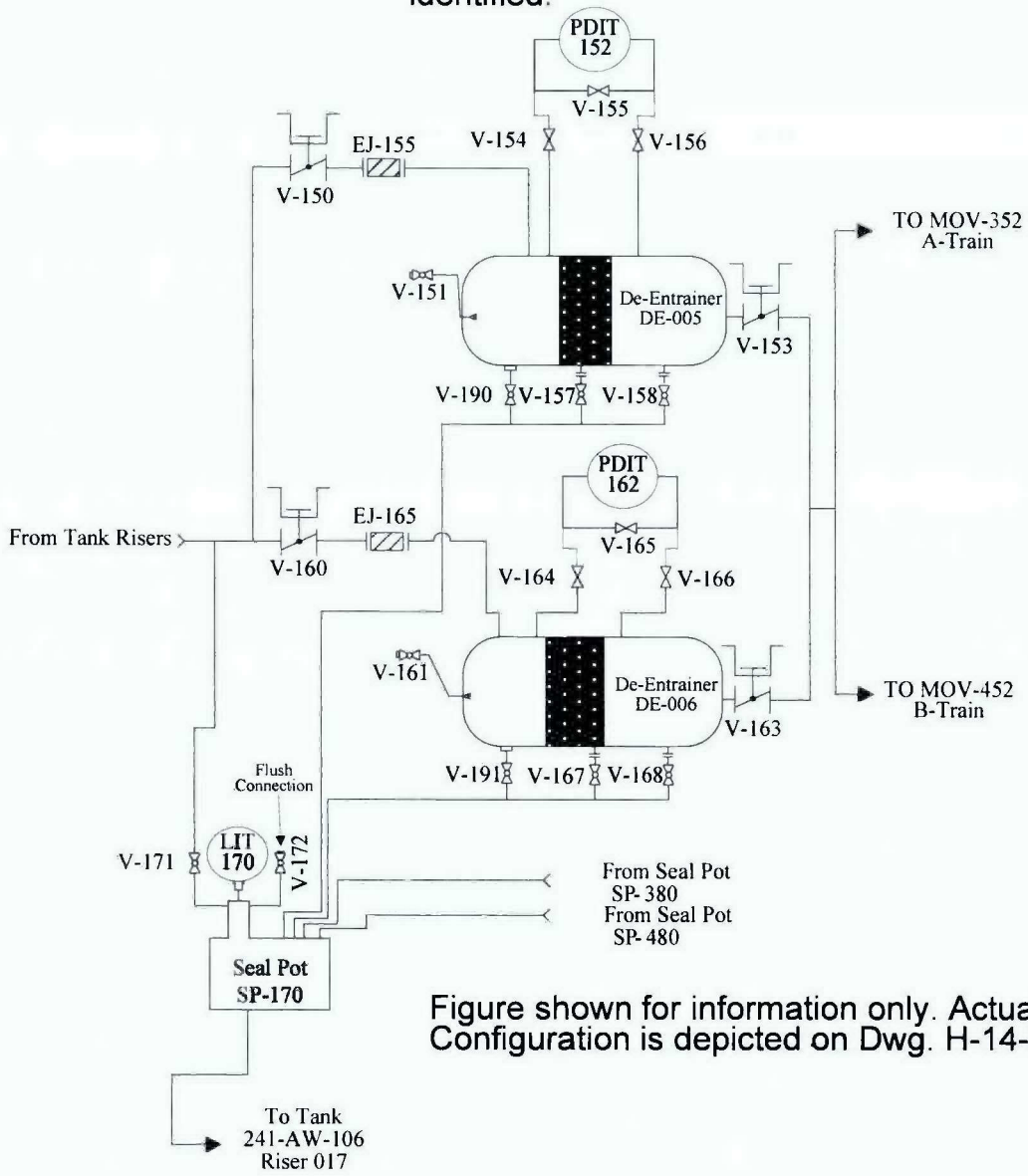

Figure shown for information only. Actual Configuration is depicted on Dwg. H-14-020102

Figure 3 - Stack Sampling System

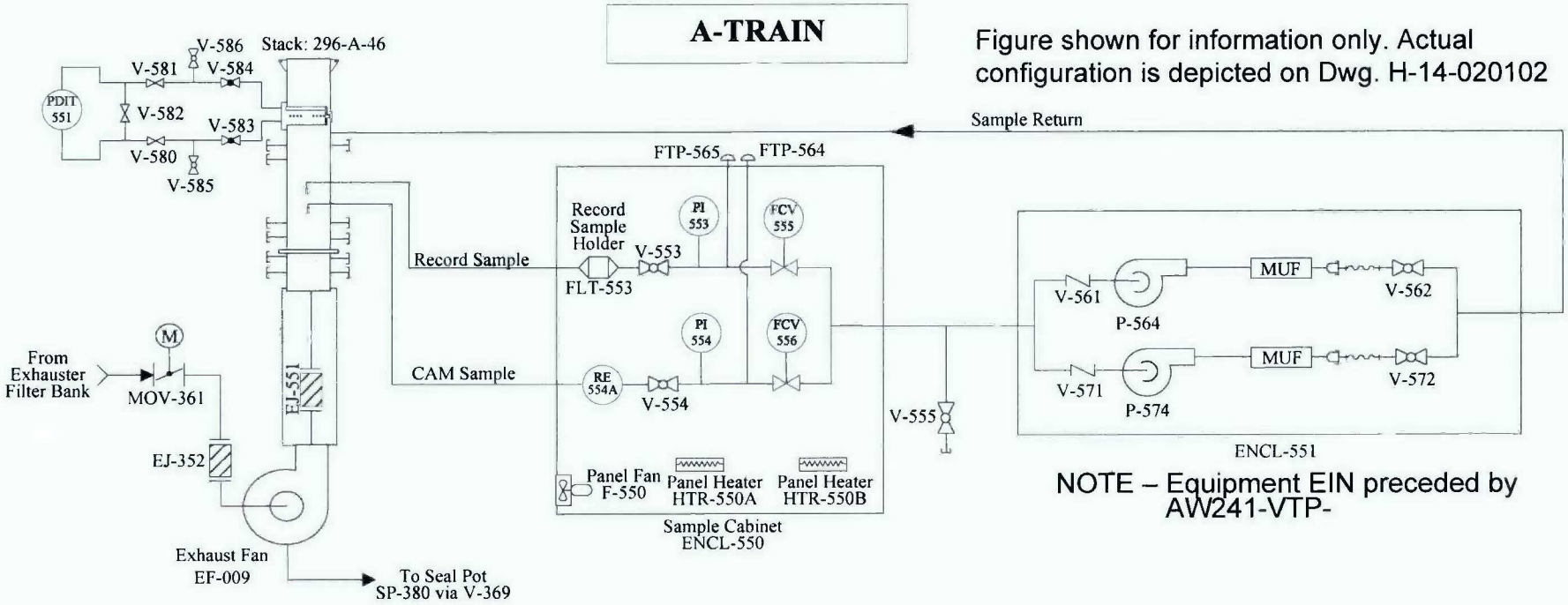

NOTE – Equipment EIN preceded by AW241-VTP-

Figure 3 - Stack Sampling System (Cont.)

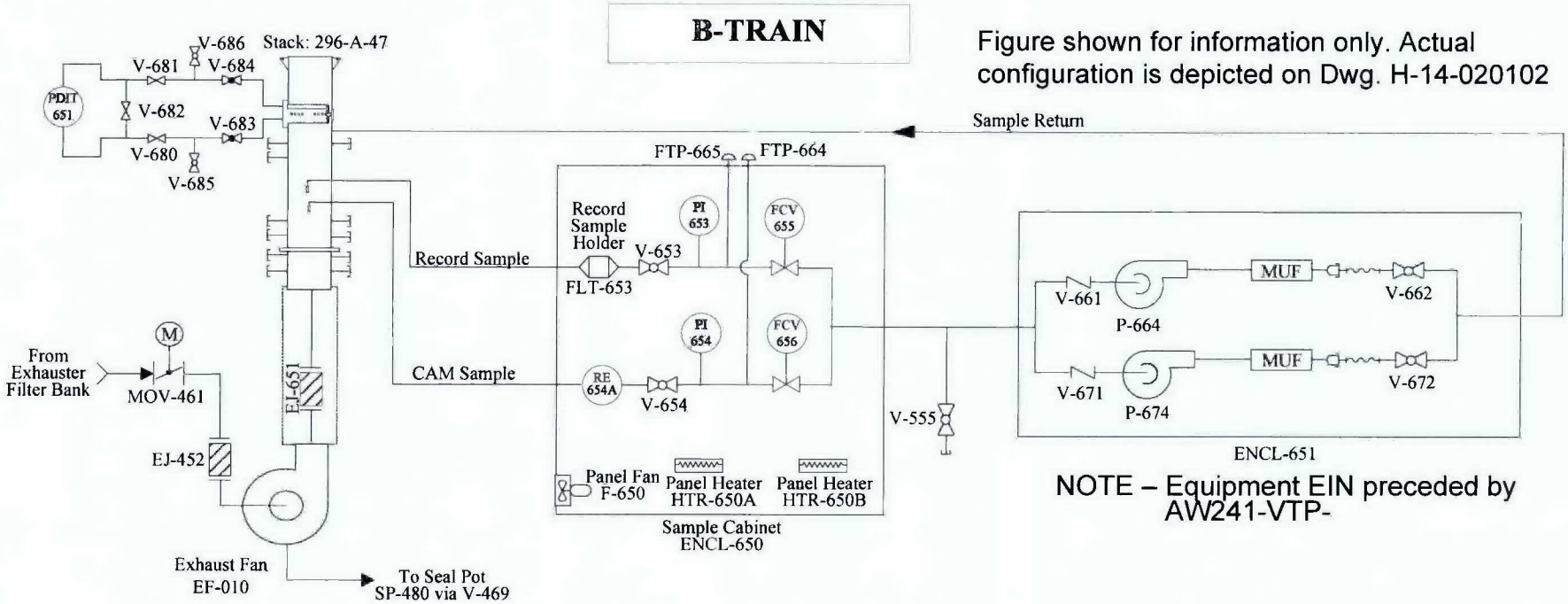

NOTE – Equipment EIN preceded by AW241-VTP-

Figure 4 - Tank Air Inlet Station Equipment

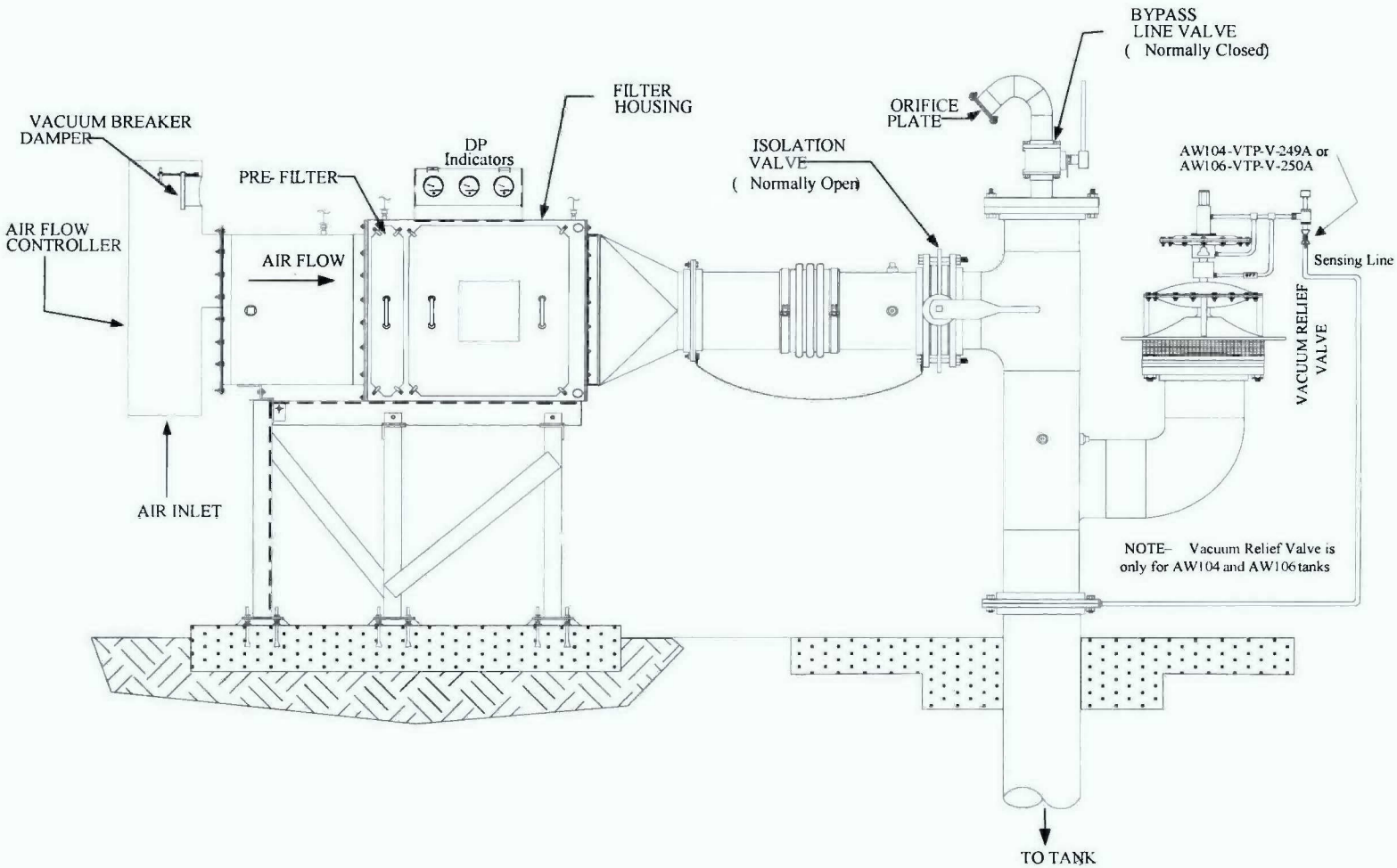

Figure 5 - Ventilation Inlet System

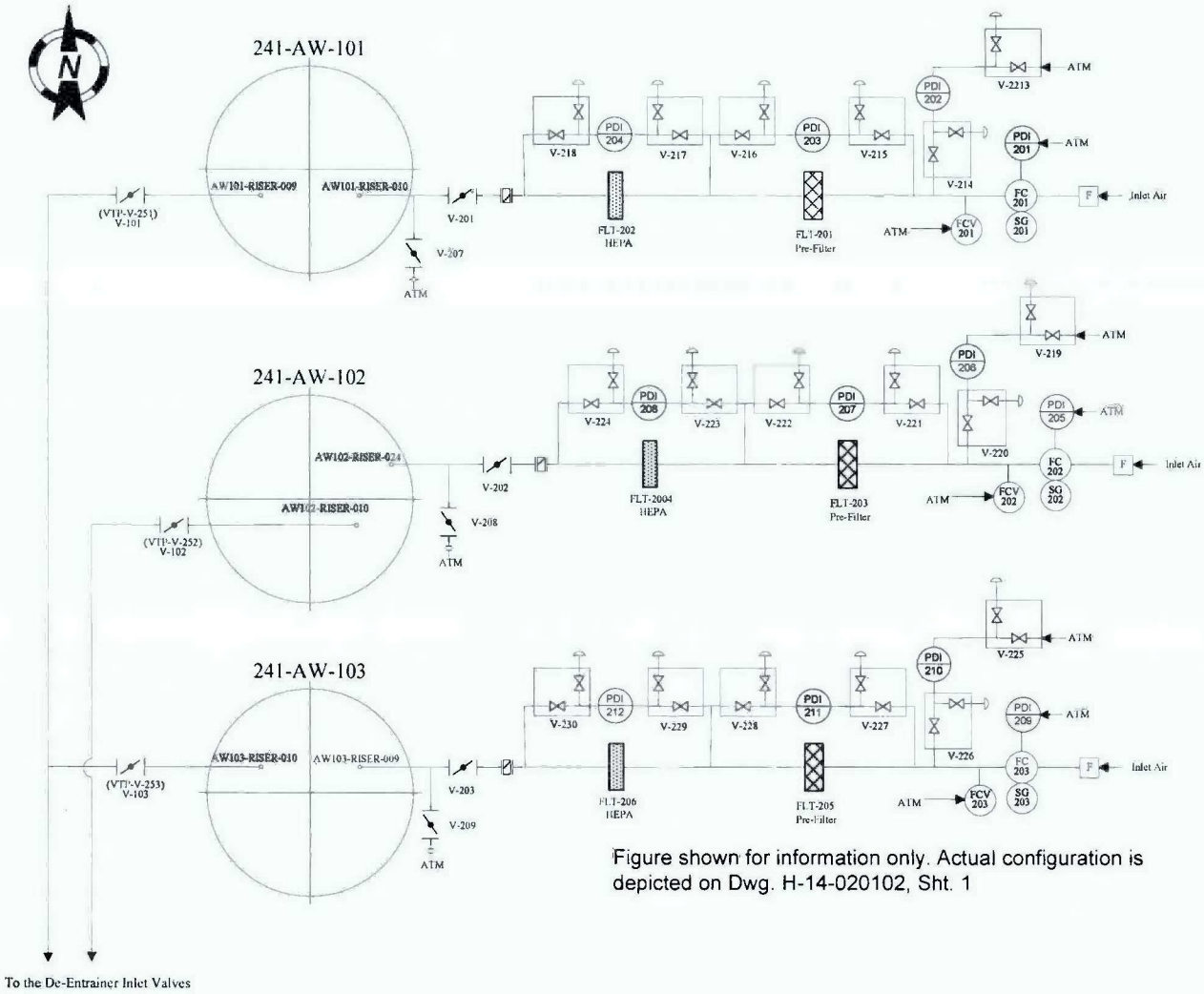

Figure shown for information only. Actual configuration is depicted on Dwg. H-14-020102, Sht. 1

Figure 5 - Ventilation Inlet System (Cont.)

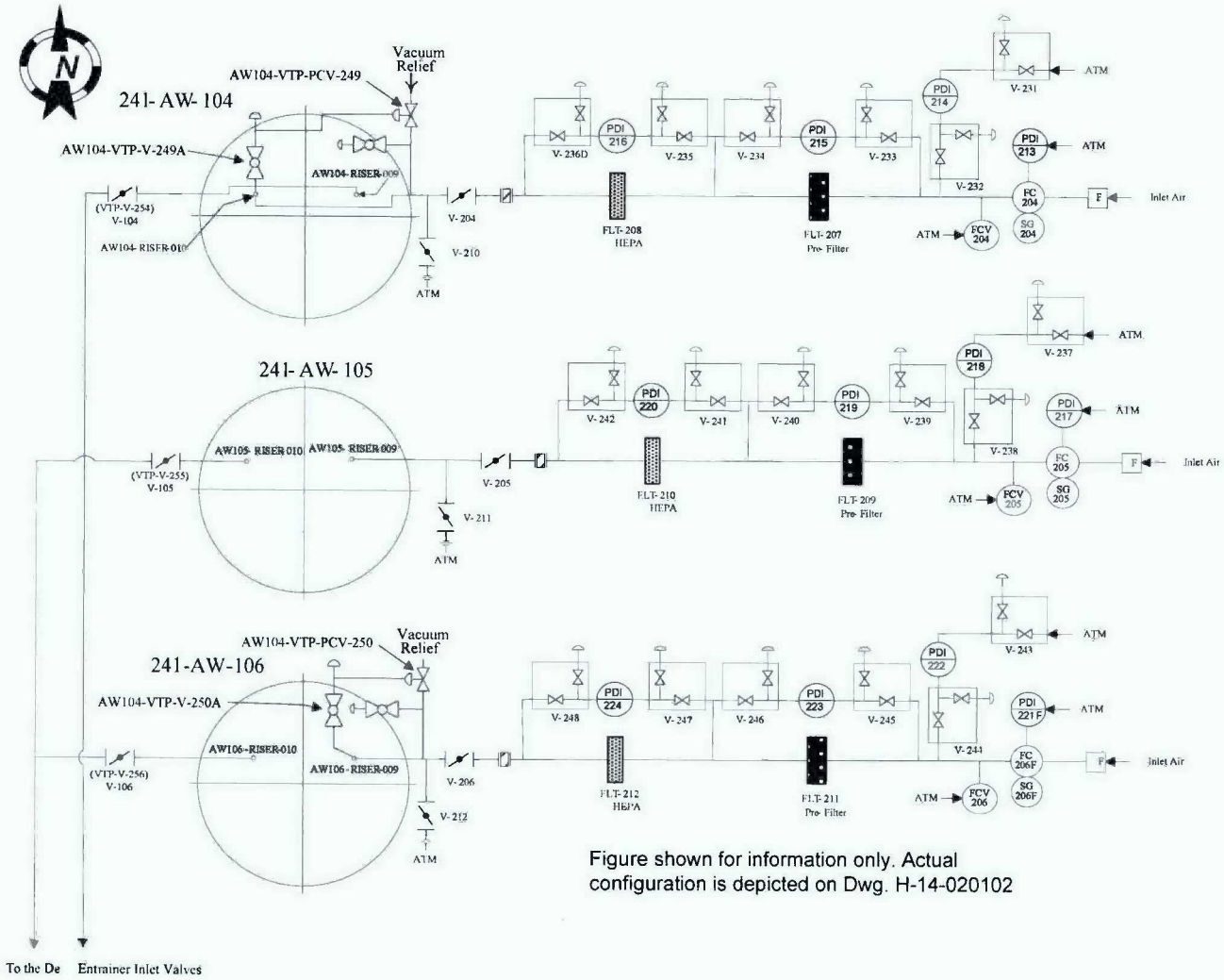

Figure shown for information only. Actual configuration is depicted on Dwg. H-14-020102

Figure 6 - Air Flow Controller Flow Verification

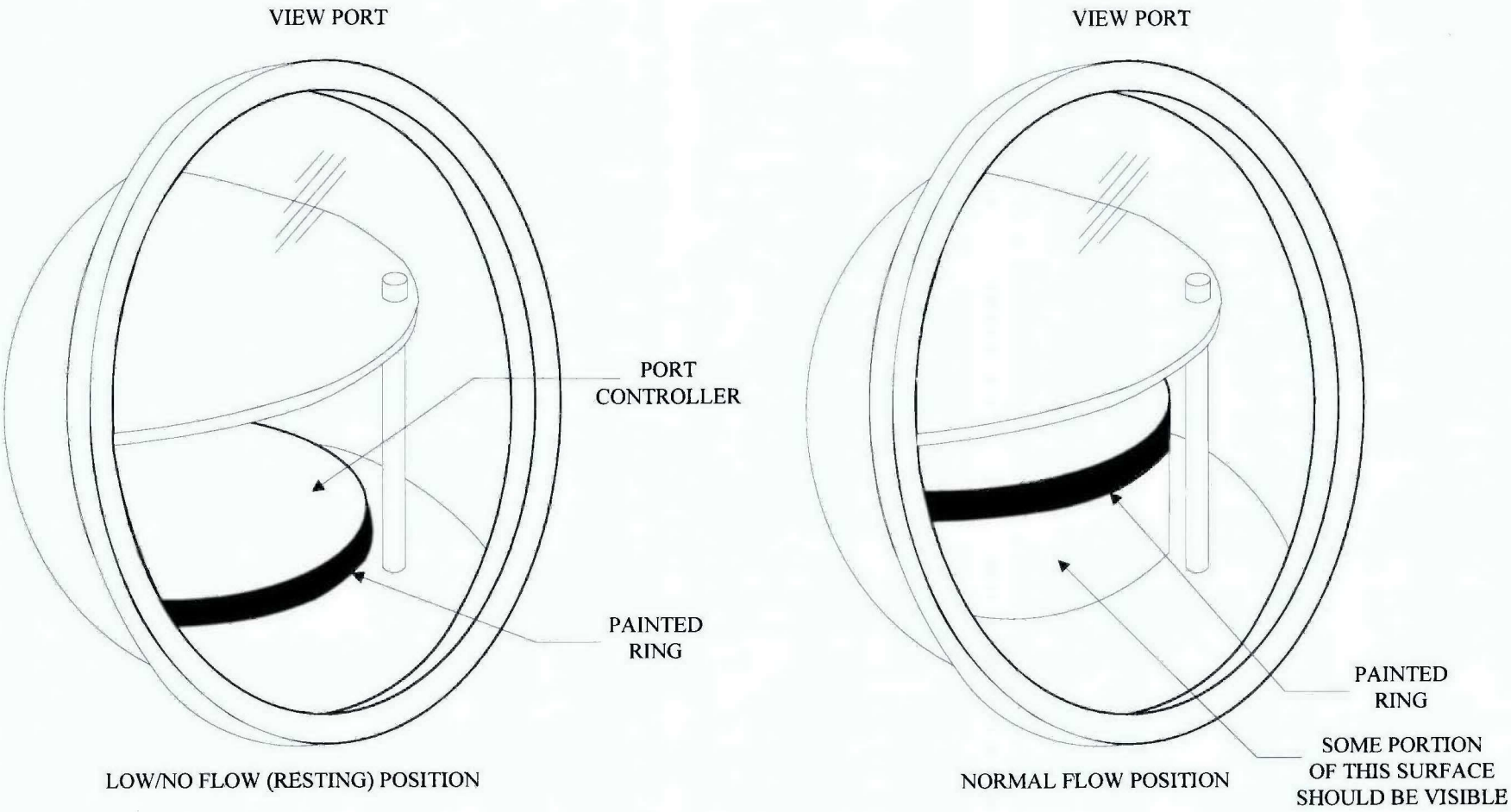

Figure 7 - Air Flow Controller Assembly

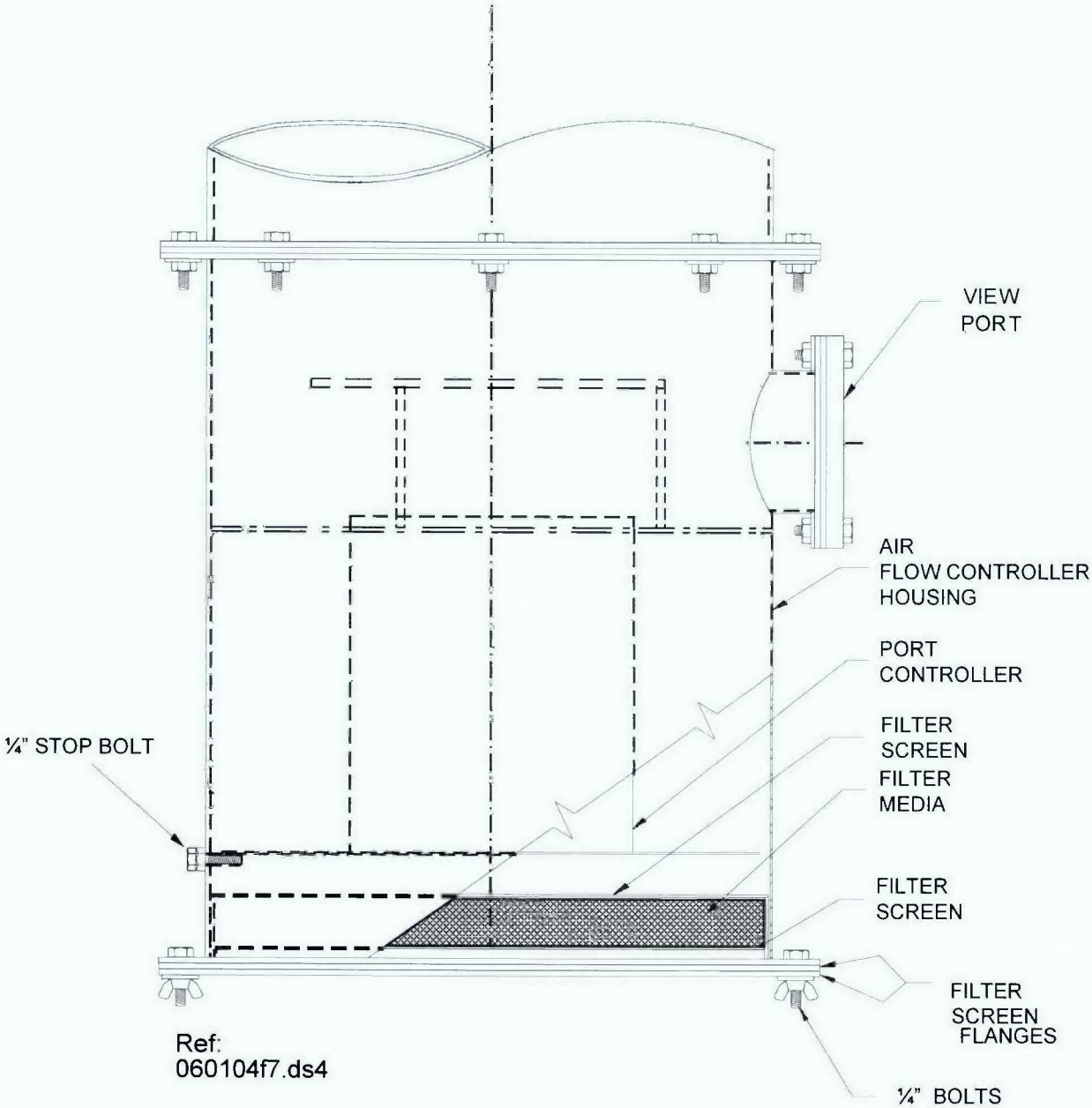

Appendix ZD, 241-AW Exhauster Stack 296-A-47 Air Flow Test Data Sheets

Tank Farm Maintenance Procedure **MAINTENANCE**

USQ # N/A

Justification:

Periodic Review

Summary of Changes:

Deleted sheet 3 from Data Sheet 5. Pg 13 changed sd to I, changed Sht 5 to Sht 2, added "and work request written to clean stack flow element"

Next Periodic Review Date - 01/14/2014

Click for copy of Word (native) file

STACK 296-A-47 SITE-SPECIFIC DATA

General Information

NOTE - Equipment Identification Numbers preceded with a number symbol (#) are prefixed by AW241-VTP-.

Stack:	10.02" i.d. (circular diameter) 27' 10-1/2" (height) 687' grade elevation
Flow Test Ports:	#FTP-659, #FTP-660, 1" coupling with plug; height above pad 24'-4 3/5"
Scaffolding:	None installed
Exhaust Fans:	#EF-010, 2851 acfm @ 22.7 in. wg & 170 °F See H-14-105351

Precautions & Limitations

Erect approved scaffolding to allow access to stack flow test ports.

A flagman is required for vehicle movement within the Tank Farm.

Respiratory Protection and vapor monitoring shall be in accordance with TFC-PLN-47, Worker Safety and Health Program. Specific instructions will be part of the pre-job safety meetings.

See 3-VBP-155 for additional precautions and limitations.

Prerequisites

No additional prerequisites. See 3-VBP-155.

Records

The following records are generated during the performance of this procedure and are maintained in the CHAMPS work package as record material.

- Data Sheet 1
- Data Sheet 2
- Data Sheet 3
- Data Sheet 4
- Data Sheet 5
- Data Sheet 6

The record custodian identified in the company-level Records Inventory and Disposition Schedule (RIDS) is responsible for record retention in accordance with TFC-BSM-IRM_DC-C-02.

Data Sheet 1

STEP	INSTRUMENT CALIBRATION DATA	
1	AIR FLOW INSTRUMENT	HYGROMETER
	Flow Instrument Type	Equipment Number
	Instrument Code Number	Instrument Code Number
	Cal Due Date	Cal Due Date
ADDITIONAL INSTRUMENT CALIBRATION DATA		
2		
Comments:		

Initials/Date _____

Data Sheet 2

STEP	BAROMETRIC PRESSURE READING				
	Hanford Weather Forecaster (373-2716)				
3	**Location**	**Station Number**	**Elevation (ft)**	**Time of Reading**	**Barometric Pressure (in. Hg)**
	200 East	6	680		(P_b)
	Comments:				

INSTALLED INSTRUMENT READINGS			
4	Operating exhaust fan & filter bank(s):		B-Train
	Instrument	**Location**	**Reading**
	Stack Flow	HMI, #CP-111 (Top right corner of HMI screen "Exhauster 'B'")	(SCFM)
	FI-651	HMI, #CP-111 (on screen below "Stack Flow")	(ACFM)
	Comments:		

PRE-TEST PRESSURE LEAK CHECK			
5	[Reading ≥ 3.0 in. wg and stable (± 0.2 in. wg) for 15 sec.]	Impact Pressure _____ PASS / FAIL	Static Pressure _____ PASS / FAIL
	Comments:		

Initials/Date _____

Figure 1 - 241-AW Stack 296-A-47 Air Flow Test Ports

AW Primary B Train Exhauster	
Measurement	Test Ports
Humidity	#FTP-659
Static Pressure	#FTP-659
Temperature	#FTP-659, #FTP-660
Velocity Pressure	#FTP-659, #FTP-660

Stack Diameter	10. 02 inch I.D.
Stack Area	0. 5476sq.ft.
Height from Bottom of Skid To#FTP- 659 & #FTP-660:	24 ft 4 3/5 in.
Ground Elevation	687ft
FTP Elevation	711 ft 4 3/5 in.

Note - Equipment Identification Numbers with a number symbol (#) are prefixed by AW241-VTP- on the field labels

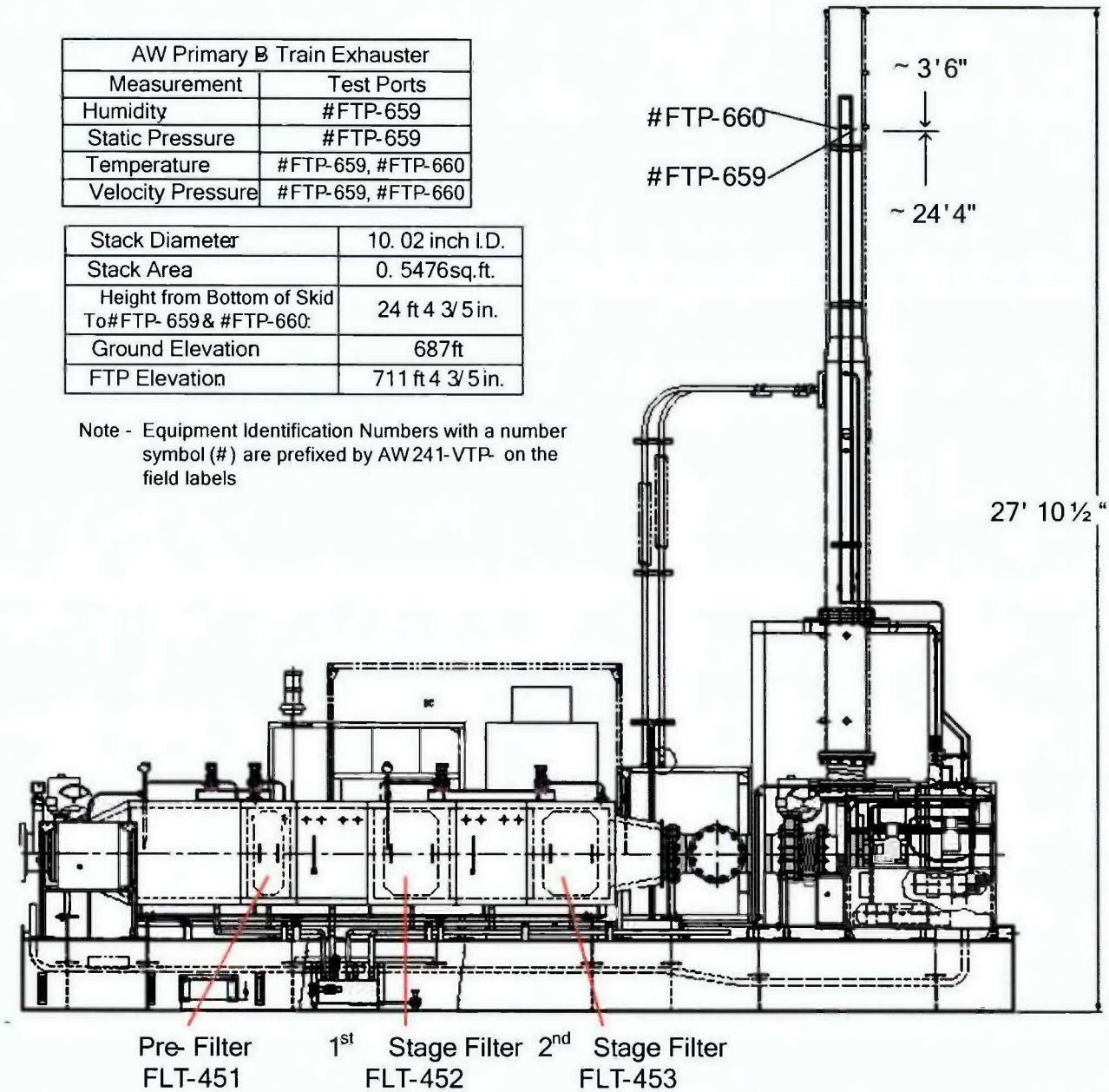

Data Sheet 3 (Sheet 1 of 2)

STACK AIR FLOW MEASUREMENTS						
STEP	**TEST PORT #FTP-659**					
6	Relative Humidity: (%)		(RH)			
7	Static Pressure: (in.wg)		**INITIAL**		**RETEST (IF REQUIRED)**	
			(P_g)		(P_g)	
8	**Traverse Points* (in.)**	**Temp.**	**Velocity (Initial)**		**Velocity (Retest)**	
		ts (°F)	**VP (in. wg)**	**FPM** (ft/min)**	**VP (in. wg)**	**FPM** (ft/min)**
	½					
	½					
	⅞					
	1 ¼					
	1 ¾					
	2 ¼					
	2 ⅞					
	3 ¾					
	6 ¼					
	7 ⅛					
	7 ¾					
	8 ¼					
	8 ¾					
	9 ⅛					
	9 ½					
	9 ½					
9	TOTAL ts		TOTAL FPM		TOTAL FPM	

* Traverse points are measured relative to internal diameter (i.d.); none may be located within 0.5 in. of stack walls.

** $FPM = 4005\sqrt{VP}$

Time test completed: _____ Initials/Date _____

Data Sheet 3 (Sheet 2 of 2)

STACK AIR FLOW MEASUREMENTS						
STEP	TEST PORT #FTP-660					
	Traverse Points* (in.)	Temp.	Velocity (Initial)		Velocity (Retest)	
		ts (°F)	VP (in. wg)	FPM** (ft/min)	VP (in. wg)	FPM** (ft/min)
8	½					
	½					
	⅞					
	1 ¼					
	1 ¾					
	2 ¼					
	2 ⅞					
	3 ¾					
	6 ¼					
	7 ⅛					
	7 ¾					
	8 ¼					
	8 ¾					
	9 ⅛					
	9 ½					
	9 ½					
9	TOTAL ts		TOTAL FPM		TOTAL FPM	

* Traverse points are measured relative to internal diameter (i.d.); none may be located within 0.5 in. of stack walls.

** $FPM = 4005\sqrt{VP}$

Time test completed: _____ Initials/Date _____

Data Sheet 4

STEP	PITOT TUBE PERFORMANCE CHECK - #FTP-659 AND #FTP-660	
10	(PASS = P ≤ ± 5%); FAIL = P > ± 5%) $P = [(VP1 - VP2) \div VP1] \times 100 =$ ____% P = [(_____ - _____) ÷ _____] x 100 = _____% If P > ± 5% AND VP1 < 0.04 in. wg, air flow retest is NOT required; System Engineer will determine acceptability of pitot tube performance.	PASS/FAIL
	Comments:	

POST-TEST PRESSURE LEAK CHECK - #FTP-659 AND #FTP-660			
11	Reading ≥3.0 in. wg & stable (±0.2 in. wg) for 15 sec.	Impact Pressure _____ PASS / FAIL	Static Pressure _____ PASS / FAIL
	Comments:		

STACK AIR FLOW CALCULATIONS - #FTP-659 AND #FTP-660			
12	Total ts = ts1 + ts2 + ts3 + ...	Total Port #FTP-659 (°F)	(Sht 3)
		Total Port #FTP-660 (°F)	(Sht 3)
		ts (total) (#FTP-659 + #FTP-660) (°F)	
13	Traverse Point Average ts = Total ts ÷ 32	ts(avg) (°F)	
Traverse Point Velocity $(FPM) = 4005\sqrt{VP}$		Data Sheet 3	
14	Total FPM = FPM1 + FPM2 + FPM3 + ...	Total Port #FTP-659	(Sht 3)
		Total Port #FTP-660	(Sht 3)
		Total FPM (#FTP-659 + #FTP-660)	
15	Average FPM = Total FPM ÷ 32	fpm (avg)	
16	Total CFM = Average FPM x 0. 5476 sq ft	cfm (total)	

Initials/Date: _____

Data Sheet 5 (Sheet 1 of 3)

ENVIRONMENTAL AIR FLOW CALCULATION WORKSHEET

AVERAGE ACTUAL STACK GAS VELOCITY (v_s)

$$v_s = K_p C_p \left(\sqrt{VP}\right)_{avg} \sqrt{\frac{T_{s(avg)}}{P_s M_s}}$$

AVERAGE STACK GAS DRY VOLUMETRIC FLOW RATE (Q_{sd})

$$Q_{sd} = 60\ (1 - B_{WS})\ v_s\ A \left(\frac{T_{std}}{T_{s(avg)}}\right)\left(\frac{P_s}{P_{std}}\right)$$

$$= 60\,(1 - B_{WS}) K_p C_p \left(\sqrt{VP}\right)_{avg} A \left(\frac{T_{std}}{P_{std}}\right) \sqrt{\frac{P_s}{T_{s(avg)} M_s}}$$

Eq. Input	Description	Value
B_{ws}	Stack gas water vapor: $B_{ws} = \left(\frac{RH}{100}\right)\left(\frac{P_{ws}}{P_s}\right)$	
RH	Stack relative humidity, percent	(Sht 3)
P_{ws}	Vapor pressure of H_2O at temperature $t_{s(avg)}$	
K_p	Pitot tube constant: $85.49 \frac{ft}{sec}\left[\frac{(lb)(in.\ Hg)}{(lb\text{-}mole)°R\,(in.\ H_2O)}\right]^{\frac{1}{2}}$	85.49
C_p	Pitot tube coefficient, standard	0.99
$\left(\sqrt{VP}\right)_{avg}$	Average of velocity pressure sqrt, in. wg: $\left(\sqrt{VP}\right)_{avg} = fpm_{(avg)} \div 4005$	
$fpm_{(avg)}$	Average stack gas velocity, ft/min	(Sht 4)
A	Cross-sectional stack area, ft^2	0.5476
T_{std}	Standard absolute temperature, °R	528

Data Sheet 5 (Sheet 2 of 3)

ENVIRONMENTAL AIR FLOW CALCULATION WORKSHEET		
P_{std}	Standard absolute pressure, in. Hg	29.92
P_s	Absolute stack gas pressure, in. Hg: $P_s = P_b + (P_g \div 13.6)$	
P_b	Barometric pressure at test port, in. Hg	(Sht 2)
P_g	Stack static pressure, in. wg	(Sht 3)
$T_{s(avg)}$	Average absolute stack temperature, °R $T_{s(avg)} = 460 + t_{s(avg)}$	
$t_{s(avg)}$	Average stack gas temperature, °F	(Sht 4)
M_s	Molecular weight stack gas, wet, lb/lb-mole: $M_s = 29(1 - B_{ws}) + 18\,B_{ws}$	
CALCULATION (Q_{sd})		
		Q_{sd} = dscfm

Environmental Initials/Date: _____

Data Sheet 5 (Sheet 3 of 3)

ENGINEERING CALCULATION WORKSHEET

Installed air flow instruments qualify for environmental reporting if they have passed testing specified in 40 CFR 52, Appendix E. This testing compares instrument and Pitot tube air flow measurements over a 168-hour test period and allows ± 10% difference between their average readings. The flow rate variance check performed below provides confidence in the continued accuracy of installed air flow instrumentation.

Flow rate variance greater than ± 10% should be evaluated by the Facility HVAC Engineer to determine its cause. Continued variance greater than ± 10% between installed instrument readings and Pitot tube measurements may invalidate use of air flow instrument readings for environmental reporting.

STACK MONITOR FLOW RATE VARIANCE CHECK (*% DIFF*)

$$\% DIFF = \left[\frac{Q_{sd} - (SF_I)}{Q_{sd}} \right] x\ 100$$

Eq. Input	Description	Value
Q_{sd}	Average [measured] stack gas dry volumetric flow rate, dscfm	(DSCFM) (Sht 5)
SF_I	Average [indicated] stack gas dry volumetric flow rate, dscfm	(SCFM) (Sht 2)

CALCULATION (*% DIFF*)

*% DIFF** = %

* System Engineer shall be notified if variance (% DIFF) is greater than ± 10% and work request written to clean stack flow element.

Environmental Initials/Date: _____

Data Sheet 6

STEP	REVIEW/DISPOSITION
17	Facility Supervisor/FWS VERIFY all caps, plugs, and instrumentation have been restored to original configuration. Ventilation system restored to operating configuration: Supervisor/FWS (Signature) ____ Supervisor/FWS (Print Name) ____ Date ____
18	Facility Supervisor/FWS NOTIFY Responsible Engineer immediately for any failed items. Enter name of engineer contacted if failed items exist, AND RECORD work request number(s) for items requiring additional maintenance OR enter N/A if no failed items exist. Return work package to Vent and Balance. Engineer contacted ____ Date ____ Work Request Number ____ Work Request Number ____
19	Vent and Balance reviewer VERIFY Data Sheets (with the exception of Air Flow Calculation Worksheets) are accurate, complete, and legible. Sign when complete. Vent and Balance Reviewer (Signature) ____ Vent and Balance Reviewer (Print Name) ____ Date ____
Comments:	

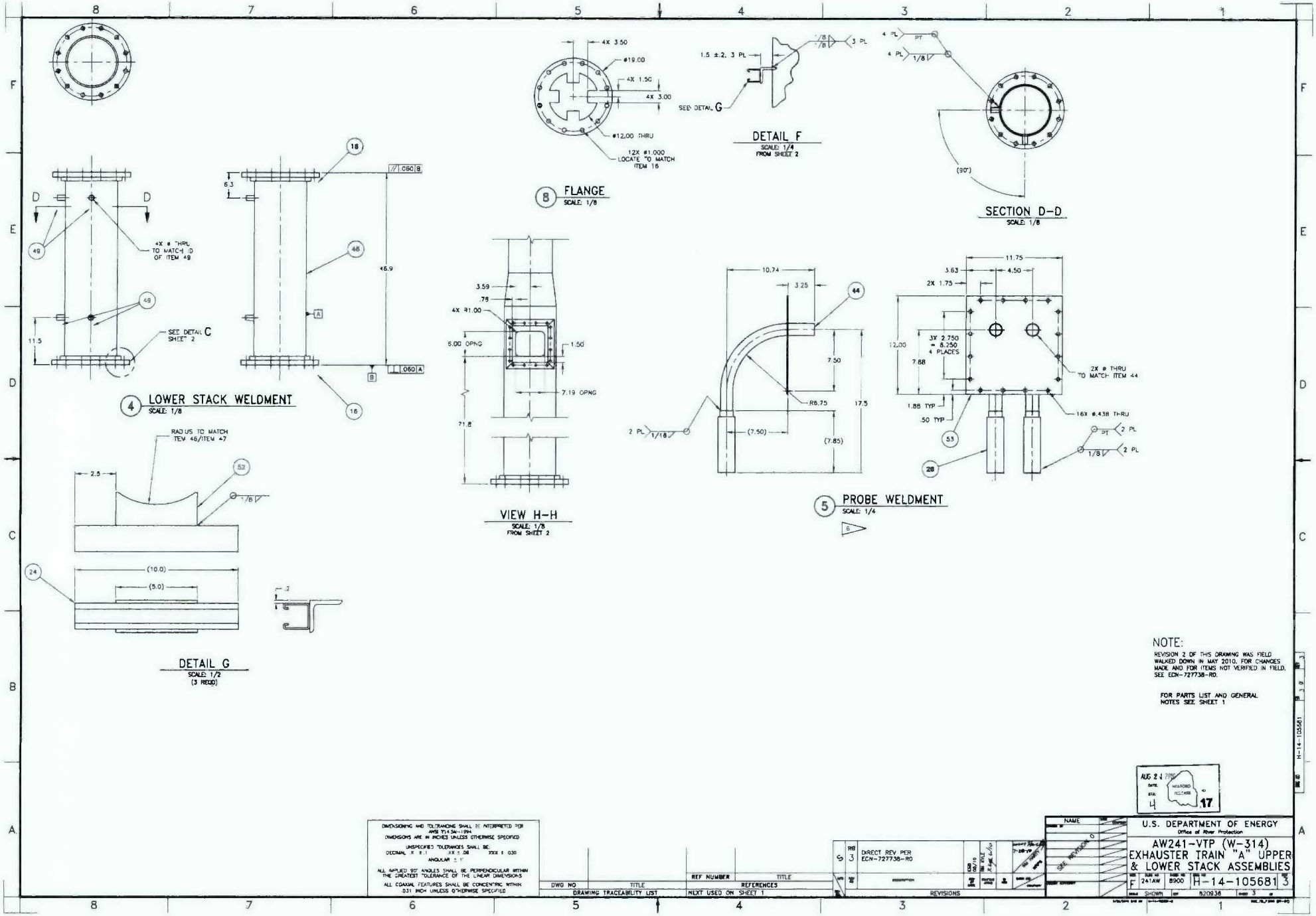

NOTE:

REVISION 2 OF THIS DRAWING WAS FIELD WALKED DOWN IN MAY 2010. FOR CHANGES MADE AND FOR ITEMS NOT VERIFIED IN FIELD, SEE ECN-727738-R0.

FOR PARTS LIST AND GENERAL NOTES SEE SHEET 1

DIMENSIONING AND TOLERANCING SHALL BE INTERPRETED PER ANSI Y14.5M-1994
DIMENSIONS ARE IN INCHES UNLESS OTHERWISE SPECIFIED
UNSPECIFIED TOLERANCES SHALL BE
DECIMAL X ± .1 XX ± .06 XXX ± .030
ANGULAR ± 1°
ALL APPLIED 90° ANGLES SHALL BE PERPENDICULAR WITHIN THE GREATEST TOLERANCE OF THE LINEAR DIMENSIONS
ALL COAXIAL FEATURES SHALL BE CONCENTRIC WITHIN .031 INCH UNLESS OTHERWISE SPECIFIED

DWG NO	TITLE	REF NUMBER	TITLE
	DRAWING TRACEABILITY LIST		REFERENCES
		NEXT USED ON SHEET 1	

REV	DESCRIPTION
3	DIRECT REV PER ECN-727738-R0

REVISIONS

U.S. DEPARTMENT OF ENERGY
Office of River Protection

AW241-VTP (W-314)
EXHAUSTER TRAIN "A" UPPER & LOWER STACK ASSEMBLIES

SIZE	CODE IDENT NO	DWG NO	REV
F	24TAW	H-14-105681	3

SCALE SHOWN | SHEET 3 OF 3

Air Flow Test For Tank Farm Stacks and Ducts

Tank Farm Maintenance Procedure **MAINTENANCE**

USQ #GCX-2

Justification:
New formatting standard
Summary of Changes:
Reformatted Records section

Next Periodic Review Date - 08/27/2013

Click for copy of Word (native) file

Table of Contents Page

1.0 PURPOSE AND SCOPE 3
1.1 Purpose 3
1.2 Scope 3
2.0 INFORMATION 3
3.0 PRECAUTIONS AND LIMITATIONS 4
3.1 Radiation and Contamination Control 4
3.2 Environmental Compliance 5
3.3 Limits 5
4.0 PREREQUISITES 6
4.1 Special Tools, Equipment, and Supplies 6
4.2 Performance Documents 6
4.3 Field Preparations 6
5.0 PROCEDURE 7
5.1 Record Test Equipment Information 7
5.2 Record Barometric Pressure 8
5.3 Record Installed Instrumentation Readings 8
5.4 Perform Pre-Test Leak Check 9
5.5 Test Stack Air Flow 10
5.6 Verify Pitot Tube Performance 11
5.7 Perform Post-Test Leak Check 12
5.8 Restoration 13

5.9 Perform Air Flow Test Calculations 14
5.10 Review/Disposition 15
5.11 Records 16

1.0 PURPOSE AND SCOPE

1.1 Purpose

This procedure provides instructions for testing velocity and volumetric flow rate of Tank Farm air systems that exhaust through stacks or ducts. Where physical configuration allows, velocity and flow rates are tested per 40 CFR 60, Appendix A, Methods 1, 1A, 2, and 2C.

1.2 Scope

1.2.1 This procedure includes Tank Farms site-specific appendices.

1.2.2 This procedure can be used for purposes other than emission measurement air flow testing, in which case System Engineer may omit requirements for barometric pressure, relative humidity, static pressure, and temperature data.

2.0 INFORMATION

None

3.0 PRECAUTIONS AND LIMITATIONS

NOTE - Additional precautions and limitations may be specified in the applicable site-specific Appendix.

3.1 Radiation and Contamination Control

3.1.1 When disconnecting, breaching or opening systems or system components that are currently or previously connected to waste tanks or waste transfer systems;

- Continuous HPT coverage is required
- Pre-job and post-job surveys are required
- A wet rag will be used to contain the breach until radiological verifications have been performed.

3.1.2 When performed with a work package/RWR, this procedure does not require a review by Radiological Engineering/Work Planning if work is performed under a General RPP Radiological Work Permit (RWP).

3.1.3 When performed without a work package/RWR, this procedure is limited to radiological areas and work activities permitted by a general radiation work permit.

3.1.4 When work is performed in or when work will result in a high contamination, high radiation, or an airborne radioactivity area, an approved work package must be developed which is reviewed by Radiological Control per ALARA Work Planning procedure TFC-ESHQ-RP_RWP-C-03.

3.1.5 The opening of any system or component within a Radiological Area requires the presence of a Health Physics Technician to verify contamination control.

3.1.6 Special care shall be taken to ensure contamination control when inserting and withdrawing vent and balance test equipment.

3.1.7 All Vent & Balance test equipment shall be radiologically surveyed for contamination when withdrawn from ventilation system.

3.1.8 Externals of caps, plugs, and instrumentation shall be radiologically surveyed before and after removal from the ventilation system and again after reinstallation.

3.2 Environmental Compliance

Tank Farm ventilation systems and exhaust monitoring systems are regulated under Washington State Administrative Code (WAC) Chapters 173-400, 173-401, 173-460, and 246-247 and applicable Notices of Construction (NOC) issued to ensure compliance with these regulations. To ensure reporting requirements are met, all planned and unplanned outages of Tank Farm ventilation systems, abatement control equipment, and exhaust monitoring systems, including portable exhausters, must be immediately reported to Environmental per the Environmental On-Call List. Environmental will determine and make the required notifications pertaining to ventilation system outages.

3.3 Limits

RPP-11413, Technical Basis for Ventilation System Requirements

4.0 PREREQUISITES

NOTE - Additional prerequisites may be specified in the applicable site-specific Appendix.

4.1 Special Tools, Equipment, and Supplies

The following supplies may be needed to perform this procedure:

- Standard pitot tube
- Air source
- Time piece
- Calculator
- Manometer or similar airflow equipment
- Hygrometer or other temperature and humidity measuring equipment
- Other tools, equipment and supplies as identified by Shift Manager/OE/ FLM/User.

4.2 Performance Documents

The following procedures may be needed to perform this procedure:

- Site-specific Appendix, as required
- Maintenance Procedure 2-MISC-160, Static Bonding for Portable Equipment in Tank Farms, as required.

4.3 Field Preparations

4.3.1 Facility Supervisor/FWS shall conduct pre-job safety briefing.

4.3.2 If static bonding for flammable gas control is required, procedure 2-MISC-160 shall be performed in conjunction with this procedure.

4.3.3 If required, scaffolding shall be installed and approved before performing this procedure.

5.0 PROCEDURE

NOTE - This test measures ventilation system air flow. Adjusting ventilation system equipment during air flow testing is NOT permitted.

- Required figures and Data Sheets are located in site-specific Appendix.
- Sections 5.1 through 5.4 may be performed in any order or concurrently.
- If performance of any step in this procedure is not required for procedure completion, the step not performed can be indicated as such by entering "N/A" in the appropriate data sheet sign-off space and explained in Comments/Remarks section of data sheet.

5.1 Record Test Equipment Information

NOTE - For shutdown of portable exhauster system not used for primary tank ventilation refer to associated portable exhauster Alarm Response Procedure.

5.1.1 **IF** primary tank ventilation exhauster shuts down while performing this procedure, **EVACUATE** Tank Farm, **AND**

IMMEDIATELY NOTIFY Shift Manager exhauster has shut down.

5.1.2 **IF** during performance of this procedure, any of the following conditions are found,

- Flammable gas concentrations exceed specified limits
- Any equipment malfunction which could prevent fulfillment of its functional requirements.

PERFORM the following:

5.1.2.1 **IMMEDIATELY STOP** work.

5.1.2.2 **PLACE** equipment in a safe condition.

5.1.2.3 **NOTIFY** Facility Supervisor/FWS.

5.1.2.4 **PROCEED** as directed.

5.1.3 **RECORD** equipment information and calibration data in Step 1 of Data Sheet 1.

5.1.4 **IF** additional or replacement instrument(s) are used, **RECORD** equipment information and calibration data in Step 2 of applicable Data Sheet, **AND**

EXPLAIN in Comments section of Data Sheet.

5.2 Record Barometric Pressure

NOTE - Barometric pressure may be read and recorded at any time before, during or after this procedure is performed. Time of reading must be recorded along with barometric pressure value and elevation and location of reading verified.

5.2.1 **CONTACT** Hanford Weather Forecaster by telephone (373-2716).

5.2.2 **REQUEST** absolute barometric pressure (P_b) for closest weather station, **AND**

RECORD pressure and time of pressure reading on Step 3 of appropriate Data Sheet.

5.2.3 **VERIFY** weather station number and elevation as specified in Step 3 of appropriate Data Sheet.

5.3 Record Installed Instrumentation Readings

5.3.1 **IDENTIFY** operating exhaust fan as specified in Step 4 of appropriate Data Sheet.

5.3.2 **RECORD** installed instrument readings as identified on Data Sheet 2.

5.4 Perform Pre-Test Leak Check

5.4.1 **BLOW** clean, dry air into pitot tube impact hole until manometer reads at least 3.00 in. wg, **AND**

RECORD impact pressure reading in Step 5 of appropriate Data Sheet.

5.4.2 **CLOSE** off hole opening, **AND**

WAIT at least 15 seconds.

NOTE - Leak check PASSES if manometer reading remains stable (± 0.2 in. wg) for at least 15 seconds; otherwise, leak check FAILS.

5.4.3 **OBSERVE** manometer reading, **AND**

RECORD in Step 5 of appropriate Data Sheet whether leak check PASSES or FAILS.

5.4.4 **APPLY** suction to pitot tube static pressure hole until manometer reads at least 3.00 in. wg, **AND**

RECORD Static pressure reading in Step 5 of appropriate Data Sheet.

5.4.5 **CLOSE** off hole opening, **AND**

WAIT at least 15 seconds.

NOTE - Leak check PASSES if manometer reading remains stable (± 0.2 in. wg) for at least 15 seconds; otherwise, leak check FAILS.

5.4.6 **OBSERVE** manometer reading, **AND**

RECORD in Step 5 of appropriate Data Sheet whether leak check PASSES or FAILS.

5.4.7 **IF** either leak check fails, **REPAIR OR REPLACE** equipment as required, **AND**

REPEAT Steps 5.4.1 through 5.4.6.

5.5 Test Stack Air Flow

5.5.1 **PERFORM** pre-job radiation & contamination survey of work area.

NOTE - Flammable gas control limits are as noted in the work document of the work package for the specific tank and filter being worked.

5.5.2 **SAMPLE** duct/stack for hazardous gases as required per work document of work package.

NOTE - Traverse point intervals on Data Sheet are measured relative to stack or duct internal diameter (i.d.). Test ports are identified on Figure 1.

5.5.3 **MARK** temperature probe and pitot tube for traverse point intervals shown on appropriate Data Sheet.

NOTE - Steps 5.5.4 through 5.5.7 may be performed in any logical order or concurrently.

5.5.4 **READ** relative humidity (RH) in stack air stream, **AND**

RECORD in Step 6 of appropriate Data Sheet.

5.5.5 **READ** static air pressure (P_g) in stack air stream, **AND**

RECORD in Step 7 of appropriate Data Sheet.

5.5.6 **READ** stack air temperature (t_s) at each traverse point in order shown on Data Sheet 3, **AND**

RECORD in Step 8 of appropriate Data Sheet.

5.5.7 **READ** velocity pressure (VP) at each traverse point in order shown on Data Sheet 3, **AND**

RECORD in Step 8 of appropriate Data Sheet.

5.6 Verify Pitot Tube Performance

NOTE - If last traverse point reading can be duplicated, this traverse point may be used to verify pitot tube performance. However, if velocity pressure at last traverse point is unsuitably low (less than 0.04 in. wg), then traverse point with the highest velocity pressure value should be used to verify pitot tube performance.

5.6.1 **COPY** last traverse point measurement from Data Sheet 3, **AND**

ENTER as VP1 in Step 10 of appropriate Data Sheet.

5.6.2 **PURGE** pitot tube impact and static pressure holes with clean, dry, pressurized air.

5.6.3 **REPEAT** last traverse point measurement, **AND**

ENTER reading as VP2 in Step 10 of appropriate Data Sheet.

5.6.4 **CALCULATE** percent difference (P) between measurements.

NOTE - If percent difference is greater than ± 5% AND velocity pressure at VP1 is less than 0.04 in. wg, repeating Steps 5.5.5 through 5.6.4 is NOT required. Environmental Engineer will determine acceptability of VP measurements.

5.6.5 **IF** percent difference is greater than ± 5% AND VP1 is equal to or greater than 0.04 in. wg, **REPEAT** Steps 5.5.5 through 5.6.4.

5.6.6 **RECORD** time air flow test is completed at the bottom of Data Sheet 3.

5.7 Perform Post-Test Leak Check

5.7.1 **BLOW** clean, dry air into pitot tube impact hole until manometer reads at least 3.00 in. wg, **AND**

RECORD impact pressure reading in Step 11 of appropriate Data Sheet.

5.7.2 **CLOSE** off hole opening, **AND**

WAIT at least 15 seconds.

NOTE - Leak check PASSES if manometer reading remains stable (± 0.2 in. wg) for at least 15 seconds; otherwise, leak check FAILS.

5.7.3 **OBSERVE** manometer reading, **AND**

RECORD in Step 11 of appropriate Data Sheet whether leak check PASSES or FAILS.

5.7.4 **APPLY** suction to pitot tube static pressure hole until manometer reads at least 3.00 in. wg, **AND**

RECORD Static pressure reading in Step 11 of appropriate Data Sheet.

5.7.5 **CLOSE** off hole opening, **AND**

WAIT at least 15 seconds.

NOTE - Leak check PASSES if manometer reading remains stable (± 0.2 in. wg) for at least 15 seconds; otherwise, leak check FAILS.

5.7.6 **OBSERVE** manometer reading, **AND**

RECORD in Step 11 of appropriate Data Sheet whether leak check PASSES or FAILS.

5.7.7 **IF** either leak check fails, **REPAIR OR REPLACE** equipment as required, **AND**

REPEAT Steps 5.5.5 through 5.7.6.

5.8 Restoration

5.8.1 **REMOVE** test equipment.

5.8.2 **WIPE** equipment on removal from stack/duct.

5.8.3 **BEFORE** removal of equipment from work area, **PERFORM** radiation & contamination survey.

5.8.4 **INSTALL** all caps, plugs, or instrumentation on test ports.

5.8.5 **RESTORE** air system to operating configuration.

5.8.6 **PERFORM** post-job radiation & contamination survey of work area.

5.9 Perform Air Flow Test Calculations

5.9.1 **DETERMINE** Total t_s for the test port(s), **AND**

ENTER value in Step 9 of appropriate Data Sheet.

5.9.2 **SUM** the Total t_s's from Step 9 of appropriate Data Sheet, as applicable, **AND**

ENTER value in Step 12 of appropriate Data Sheet.

5.9.3 **DETERMINE** Average t_s by dividing Total t_s (from Step 12 of appropriate Data Sheet) by number of t_s entries, **AND**

ENTER value in Step 13 of appropriate Data Sheet.

5.9.4 **CALCULATE** Velocity FPM for each traverse point, **AND**

ENTER values in Step 8 of appropriate Data Sheet.

5.9.5 **DETERMINE** Total FPM for the test port(s), **AND**

ENTER in Step 9 of appropriate Data Sheet.

5.9.6 **SUM** the Total FPMs from Step 9 of Data Sheet 3, as applicable, **AND**

ENTER value in Step 14 of appropriate Data Sheet.

5.9.7 **DETERMINE** Average FPM by dividing Total FPM (from Step 15 of Data Sheet 4) by number of FPM entries, **AND**

ENTER value in Step 15 of appropriate Data Sheet.

5.9.8 **CALCULATE** Total CFM to determine stack air flow, **AND**

ENTER value in Step 16 of appropriate Data Sheet.

5.10 Review/Disposition

Field Work Completion

5.10.1 **CONFIRM** performing personnel restore caps, plugs, and instrumentation to original configuration.

5.10.2 **WHEN** Ventilation system is restored to operating configuration, **COMPLETE** Step 17 of appropriate Data Sheet.

5.10.3 **IF** no failed items exist, **ENTER** N/A in Step 18 of appropriate Data Sheet, **AND**

GO TO Step 5.10.8.

5.10.4 **IF** any failed items exist, **IMMEDIATELY NOTIFY** System Engineering.

5.10.5 **RECORD** name of engineer contacted in Step 18 of appropriate Data Sheet.

5.10.6 **RECORD** in Step 18 of appropriate Data Sheet any Work Request Numbers generated to correct deficiencies identified by this procedure.

5.10.7 **INFORM** Operations management that field work is complete, **AND**

FINISH Field Work Complete (FWC) section of work package.

5.10.8 **FORWARD** Work Package to Vent and Balance.

5.10 Review/Disposition (Cont.)

Post Review

5.10.9 **CHECK** Data Sheets (except for the Air Flow Calculation Worksheets) for completeness and legibility.

5.10.10 **COMPLETE** Step 19 of appropriate Data Sheet.

5.10.11 **WHEN** work is complete, **NOTIFY** Engineering and Environmental with work package number and system tested.

5.10.12 **FORWARD** work package to Shift Office for Operations acceptance.

5.11 Records

The performance of this procedure generates no records. However, site specific appendices and PMIDs associated with the procedure (identified by CHAMPS for the activity) are record material maintained in the CHAMPS work package system.

The record custodian identified in the company-level Records Inventory and Disposition Schedule (RIDS) is responsible for record retention in accordance with TFC-BSM-IRM_DC-C-02.

QTY -010	PARTS / DASH NUMBER	NOMENCLATURE/DESCRIPTION	MATERIAL/REFERENCE	SHEET	ITEM NO
41		PLAIN WASHER, 1/2 (SERIES AND TYPE OPTIONAL)	18-8 SST		55
22		PLAIN WASHER, 3/8 (SERIES AND TYPE OPTIONAL)	18-8 SST		56
16		PLAIN WASHER, 7/8 (SERIES AND TYPE OPTIONAL)	18-8 SST		57
1	SS-1210-R-8	REDUCER, 3/4" X 1/2"	SWAGELOK		58
73		LOCK WASHER, HELICAL SPRING, 1/2 RGLR	18-8 SST		59
31		LOCK WASHER, HELICAL SPRING, 3/8 RGLR	18-8 SST		60
8		LOCK WASHER, HELICAL SPRING, 7/8 RGLR	18-8 SST		61
8		HEX BOLT, 1/2-13 UNC-2A X 2" LONG	ASTM A193 GR B8		62
25		HEX NUT, 1/2-13 UNC-2B	ASTM A194 GR 8F		63
4		HEX NUT, 3/8-16 UNC-2B	ASTM A194 GR 8F		64
8		HEX NUT, 7/8-9 UNC-2B	ASTM A194 GR 8F		65
2	SS-810-9	UNION ELBOW, 1/2 TUBE FITTING X 1/2 TUBE FITTING	SWAGELOK		66
1	H-14-105703-100	REMOVABLE STEP ASSEMBLY			67
1	H-14-105691-010	HEATER INSULATION ASSEMBLY			68
1	H-14-105691-020	OUTLET SPOOL INSULATION ASSEMBLY			69
1	H-14-105691-030	STACK INSULATION ASSEMBLY			70
1	H-14-105691-040	SEAL POT INSULATION ASSEMBLY			71
1	H-14-105691-050	DRAIN PIPE INSULATION ASSEMBLY			72
1	H-14-105691-060	EMS TUBING INSULATION ASSEMBLY			73
1	H-14-105691-070	EMS RETURN LINE INSULATION ASSEMBLY			74
2	SS-810-7-8	FEMALE CONNECTOR, 1/2 FEMALE NPT X 1/2 TUBE FITTING	SWAGELOK		75
1	8889T43	U-BOLT, 1/4-20 FOR 1" PIPE, TYPE 304 SST	McMASTER-CARR		76
AR		TUBING, 1/2 OD X .049 WALL, SMLS	ASTM A269 TYPE 304L OR 316L		77
1	BEN 664-12CHC	6" X 6" ENCLOSURE	HOFFMAN OR EQUIVALENT		78
1	NO. 5305	SEALING RING	T & B OR EQUIVALENT		79
1	NO. 5306	SEALING RING	T & B OR EQUIVALENT		80
2		HEX BOLT, 1/4-20 UNC-2A X 1" LONG	ASTM A193 GR B8		81
2		LOCK WASHER, HELICAL SPRING, 1/4 RGLR	18-8 SST		82

QTY -010	PARTS / DASH NUMBER	NOMENCLATURE/DESCRIPTION	MATERIAL/REFERENCE	SHEET	ITEM NO
10	P2034 HG	GALVANIZED TUBING CLAMP	UNISTRUT		29
1	C-SD20208LG	INSTRUMENT CONNECTION ENCLOSURE	HOFFMAN		30
1	2-250T	GROUNDING LUG, TWO CONNECTOR	SOUTHPORT INDUSTRIES		31
1	SEE NOTE 10	EXHAUST FAN AND MOTOR ASSEMBLY	AIR TECH		32
1	SS-85TW16P40-LLK	BALL VALVE, 1"	WHITEY		33
2	3434-7-V-304L	TUBE UNION, O-RING, 1 1/2 SOCKETWELD. ID TO MATCH .065 WALL TUBE	HART INDUSTRIES		34
1	F-66W12SS	WIRE WAY, 6 X 6 X 12 LONG TYPE 4X	HOFFMAN		35
1	SS-45S8	INSTRUMENT BALL VALVE, 1/2" TUBE FITTINGS	SWAGELOK		36
1	SS-810-P	PLUG, 1/2"	SWAGELOK		37
1	SS-1210-3	UNION TEE, 3/4"	SWAGELOK		38
AR		TUBING, 1 1/2 OD X .065 WALL, SMLS	ASTM A269 TYPE 304L		39
1		TUBING, 1 1/4 OD X .065 WALL X 3.0 LONG, SMLS	ASTM A269 TYPE 304L		40
1		TUBING REDUCER, CONCENTRIC BUTT WELD, 1 1/2 OD X 1 1/4 OD X .065 WALL	ASTM A269 TYPE 304L		41
AR		PIPE, 1" SCHED 40S	ASTM A312 GR TP 304L		42
20		ELBOW, 90°, 1" LR, SCHED 40S, BW	ASTM A403 WP 304L		43
1		ELBOW, 45°, 1" LR, SCHED 40S, BW	ASTM A403 WP 304L		44
1		PIPE CAP, 1" NPT, CLASS 150	ASTM A182 GR F 304L		45
AR		TUBING, 3/4 OD X 0.065 WALL, SMLS	ASTM A269 TYPE 304L OR 316L		46
2		ANGLE, 2 X 2 X 1/4 THK X 22.0 LONG	ASTM A276 TYPE 304L		47
2	8896T105	U-BOLT, 1/4-20 FOR 1" PIPE, TYPE 304 SST	McMASTER-CARR		48
8		HEX BOLT, 1/2-13 UNC-2A X 1 1/2 LONG	ASTM A193 GR B8		49
64		HEX BOLT, 1/2-13 UNC-2A X 1" LONG	ASTM A193 GR B8		50
4		HEX BOLT, 3/8-16 UNC-2A X 1 1/2 LONG	ASTM A193 GR B8		51
37		HEX BOLT, 3/8-16 UNC-2A X 1" LONG	ASTM A193 GR B8		52
8		HEX BOLT, 7/8-9 UNC-2A X 3" LONG	ASTM A193 GR B8		53
1	F-66WGSS	WIRE WAY GASKET & SCREW SET	HOFFMAN		54

PARTS LIST/MATERIAL LIST

QTY -010	PARTS / DASH NUMBER	NOMENCLATURE/DESCRIPTION	MATERIAL/REFERENCE	SHEET	ITEM NO
X	-010	ASSEMBLY, VENTILATION EXHAUSTER "B"		1	1
1	H-14-105694-010	SKID WELDMENT			2
1	H-14-105695-010	UPPER STACK ASSEMBLY			3
1	H-14-105695-020	LOWER STACK ASSEMBLY			4
1	H-14-105696-010	INLET SPOOL ASSEMBLY			5
1	H-14-105697-010	OUTLET SPOOL ASSEMBLY			6
1	H-14-105698-010	HEATER ASSEMBLY			7
1	H-14-105699-010	SEAL POT ASSEMBLY			8
1	H-14-105700-010	EFFLUENT MONITORING PUMP ASSEMBLY			9
1	02 HD 295	FILTER SYSTEM (LEFT HAND)	FLANDERS/CSC		10
1	H-14-105702-010	UNISTRUT ASSEMBLY			11
1	H-14-105702-020	UNISTRUT ASSEMBLY			12
1	H-14-105702-030	UNISTRUT ASSEMBLY			13
1	H-14-105702-040	UNISTRUT ASSEMBLY			14
1	H-14-105703-010	STACK SUPPORT PLATE			15
					16
1	H-14-105703-030	OPEN GRIP PLANK ASSEMBLY			17
					18
1	H-14-105704-010	INSTRUMENT ASSEMBLY			19
1	H-14-105724-010	FIELD TERMINAL ENCLOSURE ASSEMBLY			20
1	H-14-105725-010	PLC CABINET ASSEMBLY			21
1	H-14-105726-010	POWER ASSEMBLY			22
1	H-14-105726-020	HEAT TRACE CABINET			23
1	H-14-105728-030	VACCUM PUMP RELAY CABINET			24
1	H-14-105726-050	MINI POWER ZONE			25
1	H-14-105727-010	SAMPLE CABINET ASSEMBLY			26
2	P1000 HG	GALVANIZED CHANNNEL, 8.0 LONG	UNISTRUT		27
2	P1000 HG	GALVANIZED CHANNNEL, 14.0 LONG	UNISTRUT		28

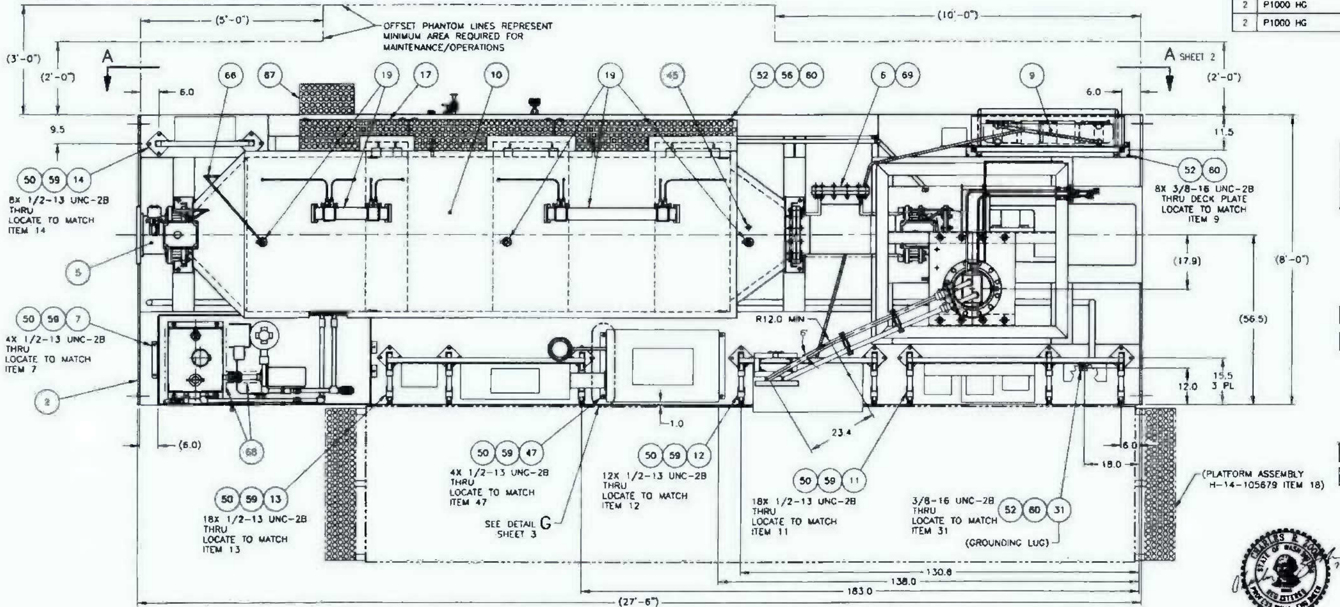

1 ASSEMBLY, VENTILATION EXHAUSTER "B" (TOP VIEW)

SCALE: 3/4" = 1'-0"

GENERAL NOTES:

1. FABRICATION AND WELDING SHALL BE IN ACCORDANCE WITH THIS DRAWING AND SPECIFICATION PTI-W314-TS-001.
2. APPROXIMATE WEIGHT OF ASSEMBLY IS 22,200 POUNDS. APPROXIMATE WEIGHT OF ASSEMBLY, LESS UPPER STACK, IS 21,320 POUNDS.
3. ABBREVIATIONS ARE IN ACCORDANCE WITH ANSI Y1.1.
4. REMOVE ALL BURRS AND BREAK ALL SHARP EDGES.
5. VACUUM PUMP RELAY CABINET (ITEM 24) SHALL BE LOCATED ARRPOX WHERE SHOWN AND ATTACHED WITH SST FASTENERS SIZED AS REQUIRED TO MATCH CABINET.
6. DISASSEMBLE BALL VALVE (ITEM 33) PRIOR TO WELDING.
7. FOR SAMPLE TUBING RUNS (FROM PROBES TO CAM AND RECORD SAMPLER).
   - THERE SHALL BE NO INWARD FACING STEPS AT THE TUBING CONNECTIONS THAT CAUSE MORE THAN A 1% REDUCTION IN TUBE DIAMETER.
   - THE TUBING ENDS SHALL BE FREE OF BURRS AND CRIMPING.
   - BENDS SHALL HAVE A CURVATURE RATIO (RADIUS OF CURVATURE OF THE BEND DIVIDED BY THE TUBE DIAMETER) OF AT LEAST 3.0
   - FLATTENING OF THE BEND CAUSED BY A BENDING PROCESS SHALL NOT EXCEED 15%, WHERE FLATTENING IS DEFINED IN TERMS OF THE ORIGINAL AND MINOR AXES OF THE TUBE CROSS SECTION AT THE ANGULAR MIDPOINT OF THE BEND.

   SPECIAL FABRICATION TECHNIQUES MAY BE REQUIRED TO MEET THESE SPECIFICATIONS (ANSI/HPS N13.1-1999).
   CLIPS SHALL NOT EXCEED 6'-0".
8. PROVIDE HOLD DOWN CLIPS AS REQUIRED ON ALL FIELD RUN TUBING. SPACING BETWEEN
9. NAME TAGS DENOTING EQUIPMENT IDENTIFICATION NUMBERS WILL BE PROVIDED BY CUSTOMER. TAGS SHALL BE LOCATED ON THE IDENTIFIED ASSEMBLY COMPONENTS IN LOCATIONS THAT ARE CLEARLY VISIBLE AFTER FINAL ASSEMBLY. SEE EQUIPMENT IDENTIFICATION SCHEDULE ON SHEET 2 (ZONE 1-E)
10. ITEM 32 SHALL BE AIR TECH MODEL TROH 24A, CLASS 100 SWSI, ARRANGEMENT 8 (CW ROTATION FROM DRIVE END) RATED FOR 2851 ACFM @ 24" SP AT 3545 RPM @ 20.07 BHP AT .052#FT3 WITH FACTORY MOUNTED 20 HP, 3600 RPM, 3/60/230/460V, VFD READY TEFC MOTOR.
11. APPLY LOCTITE THREAD LOCKER 262 PER MANUFACTURER'S INSTRUCTIONS
12. ATTACH HOFFMAN WIRE WAY (ITEM 35) TO ITEMS 20 AND 21 USING GASKET AND SCREW SET (ITEM 54) PER MANUFACTURER'S INSTRUCTIONS. LOCATE ITEM 35 AS REQD TO MATCH CUT OUTS IN ITEMS 20 AND 21.
13. ACTUAL ORIENTATION OF KEYSTONE VALVES MAY VARY.
14. FIELD ROUTE 1/2" TUBING FROM SEAL POT TO RTD COUPLING. ENSURE THAT THE TUBING SLOPES DOWNWARD CONTINUOUSLY FROM THE RTD COUPLING TO THE SEAL POT SUCH THAT ANY FLUIDS IN THE TUBE DRAIN INTO THE SEAL POT.

DIMENSIONING AND TOLERANCING SHALL BE INTERPRETED PER ANSI Y14.5M-1994
DIMENSIONS ARE IN INCHES UNLESS OTHERWISE SPECIFIED
UNSPECIFIED TOLERANCES SHALL BE:
DECIMAL X ±.1 XX ±.06 XXX ±.030
ANGULAR ± 2°
ALL IMPLIED 90° ANGLES SHALL BE PERPENDICULAR WITHIN THE GREATEST TOLERANCE OF THE LINEAR DIMENSIONS
ALL COAXIAL FEATURES SHALL BE CONCENTRIC WITHIN .031 INCH UNLESS OTHERWISE SPECIFIED

DWG NO	TITLE
DRAWING TRACEABILITY LIST	

REF NUMBER	TITLE
H-14-105679	EXHAUSTER TRAIN "A" ASSY
NEXT USED ON H-14-105676	

REFERENCES

REV	DESCRIPTION				
2	INCORPORATED DCN AW247				
1	AW170 & AS-BUILT -AW065, -AW102, -AW128, AW153, INCORPORATED DCN-AW014, -AW061,	SIGNATURES ON FILE			
0	RELEASED FOR CONSTRUCTION	NA	NA	NA	NA

REVISIONS

AUG 12 2004 — 8

PREMIER Technology, Inc.

GForce

U.S. DEPARTMENT OF ENERGY
Office of River Protection

AW241 EXHAUSTER TRAIN "B" ASSEMBLY

NAME: RK FISHER; R Bowers — SIGNATURES ON FILE

F | 241AW | 8900 | H-14-105693 | 2

SCALE SHOWN | 820936 | SHEET 1 OF 4

DWG NO H-14-105693 SH 1 OF 4 REV 2

Calibrate Hastings HFC-303 Flow Controller on AN, AW and POR107 Exhausters

Tank Farm Maintenance Procedure **Calibration**

USQ # N/A Routine Maintenance

CHANGE HISTORY (≤ LAST 5 REV-MODS)			
Rev-Mod	**Release Date**	**Justification**	**Summary of Changes**
D-0	09/06/2012	Maintenance Request	New revision.
C-5	01/05/2012	Environmental request	Replaced reference to RPP-16922 with TFC-ESHQ-ENV-STD-06. Environmental is updating documentation.

Next Periodic Review Date —09/06/2014

Click for copy of Word (native) file

This is a new revision. The First Time Use process as defined in TFC-OPS-OPER-C-13 can be used during the initial performance of this revision.

Table of Contents

Page

1.0 PURPOSE AND SCOPE 3
- 1.1 Purpose 3
- 1.2 Scope 3

2.0 INFORMATION 3
- 2.1 Terms and Definitions 3

3.0 PRECAUTIONS AND LIMITATIONS 4
- 3.1 Radiation and Contamination Control 4
- 3.2 Limits 4

4.0 PREREQUISITES 5
- 4.1 Special Tools, Equipment, and Supplies 5
- 4.2 Performance Documents 5

5.0 PROCEDURE 6
- 5.1 Bench Calibration 6
- 5.2 Zero and Span Adjustment Bench Calibration 7
- 5.3 Setup and As-Found Using Citect HMI 9
- 5.4 Zero and Span Adjustment Using Citect HMI 12
- 5.5 Setup and As-Found Using ABB HMI 15

5.6 Zero and Span Adjustment Using ABB HMI 18
5.7 Record Sample Flow Proportionality 20
5.8 Restoration Using Citect HMI 21
5.9 Restoration Using ABB HMI 22
5.10 Review 23
5.11 Records 23

Figure 1 - Rotometer Connection 24

Figure 2 - Bench Test Setup 25

Figure 3 - Trim Pot Locations 26

Figure 4 - FCV Electronics 27

Attachment 1 - RTP/Citect HMI Operations 28

Attachment 2 – ABB HMI Operations 33

1.0 PURPOSE AND SCOPE

1.1 Purpose

This procedure provides instructions to perform calibration of Hastings Instruments Flow Control Valve HFC-303, in AN, and AW Primary Exhausters and portable exhauster POR107.

1.2 Scope

This procedure applies to Hastings Instruments Flow Control Valves HFC-303, installed on Gas Effluent Monitoring System (GEMS) the AN Farm Primary Ventilation System, the AW Farm Primary Ventilation System, and portable exhauster POR107. The AN and AW Farms Primary Ventilation systems are being migrated to hardware and software from Asea Brown Boveri (ABB) and will be made part of the Tank Farm Monitoring and Control System (MCS), while the portable exhauster will remain with a Citect/RTP configuration. Therefore, this procedure will have sections on how to perform the calibration from the Human Machine Interface (HMI) for each system.

2.0 INFORMATION

2.1 Terms and Definitions

- HMI - Human Machine Interface
- CGA - Calibration, Grooming, Alignment.

3.0 PRECAUTIONS AND LIMITATIONS

3.1 Radiation and Contamination Control

3.1.1 When disconnecting, breaching or opening systems or system components that are currently or previously connected to waste tanks or waste transfer systems contamination surveys are required at system breach locations and when accessing previously unexposed areas.

3.1.2 Work in radiological areas will be performed using a radiological work permit following review by Radiological Control per TFC-ESHQ-RP_RWP-C-03, ALARA Work Planning.

3.2 Limits

TFC-ESHQ-ENV-STD-06, Environmental Requirements Standard (ALARACT Demonstrations)

4.0 PREREQUISITES

4.1 Special Tools, Equipment, and Supplies

The following supplies may be needed to perform this procedure:

- Calibrated digital multimeter (voltmeter)
- Calculator
- Flexible tubing for connections
- Various tube fittings and clamps
- Thermometer/Thermocouple indicator
- Engineering access level password, from Shift Manager
- Sierra Flow Meter or equivalent
- 0 – 5 Vdc, Variable Power Supply.

4.2 Performance Documents

The following documents may be needed during the performance of this procedure.

- TO-060-106, Operate 241-AN VTP Exhauster (not for CGA)
- TO-060-107, Operate 241-AW VTP Exhauster (not for CGA)
- TO-060-108, Operate POR107 Portable Exhaust Ventilation System
- H-14-020101, Sh. 10, 12, Ventilation Tank Primary System (VTP) A-Train O&M Sys P&ID
- H-14-020101, Sh. 11, 13 Ventilation Tank Primary System (VTP) B-Train O&M Sys P&ID
- H-14-020102, Sh. 9, 11, 241-AW HVAC Exhauster Train "A"
- H-14-020102, Sh. 10, 12, 241-AW HVAC Exhauster Train "B"
- H-14-108928, Sh. 2, Exhauster Train POR107 P&ID
- Applicable Data Sheets.

5.0 PROCEDURE

NOTE - If performance of any steps in this procedure is not required for procedure completion, steps not performed must be indicated as such by entering "N/A" in appropriate procedure section.

- Sections 5.1 through 5.9 may be worked in a logical order or excluded depending on whether work is to be accomplished using a Bench calibration, using the ABB system, or using Citect system.
- Refer to Attachment 1 for specific RTP/Citect HMI operations required for performance of this procedure.
- Refer to Attachment 2 for specific ABB HMI operations required for performance of this procedure.
- Section 5.7 is not applicable to first time calibration (CGA).
- The portable exhausters utilize the 500 series of numbers (e.g., FCV-555)
- This procedure allows for Bench Calibration or Field Calibration.

5.1 Bench Calibration

5.1.1 **REMOVE** FCV **AND**

RETURN to shop.

5.1.2 **CONNECT** MT&E per Figure 2.

5.1.3 **RECORD** As-Found values per Data Sheet.

5.1.4 **IF** out of tolerance, **GO TO** Section 5.2.

5.2 Zero and Span Adjustment Bench Calibration

NOTE - Refer to Figure 3 and Figure 4 for trim pot locations.

5.2.1 **CHECK** zero flow with vacuum OFF.

5.2.2 **IF** not previously removed, **REMOVE** cover.

5.2.3 **ADJUST** voltage input to 5 VDC **AND**

ADJUST span pot until M&TE flow is equal to 4 SCFM.

5.2.4 **TURN** vacuum pump OFF.

NOTE - When changing pot (located under electronics cover of FCV), M&TE flow will indicate changing flow. This is normal. When both flows match (4.00 scfm), span is complete.

- Span pot is used to adjust M&TE flow.
- Zero pot is used to adjust M&TE current.

5.2.5 **ADJUST** zero pot until M&TE current equals 4.0 ma.

5.2.6 **REPEAT** Steps 5.2.1 through 5.2.5 **UNTIL** desired values are obtained

OR

IF desired value cannot be obtained **NOTIFY** FWS for resolution.

5.2 Zero and Span Adjustment Bench Calibration (Cont.)

5.2.7 **ADJUST** input voltage to values listed on Data Sheet.

5.2.8 **IF** any values are out of tolerance, **REPEAT** zero and span adjustment.

5.2.9 **IF** values cannot meet tolerance after repeat, **NOTIFY** FWS/Shift Manager.

5.2.10 **RECORD** As-Left readings for flow table and electrical table on Data Sheet.

5.2.11 **UNPLUG** FCV.

5.2.12 **IF** removed, **REINSTALL** cover.

5.2.13 **REINSTALL** FCV in the field.

5.2.14 **OPEN** isolation valve V-553 for Record Sampler.

5.2.15 **OPEN** isolation valve V-554 for CAM.

5.2.16 **IF** only the Record Sample FCV (FCV-555/655) required calibrating, **GO TO** Section 5.7.

5.2.17 **IF** only the CAM Sample FCV (FCV-556/656) required calibrating, **GO TO** Section 5.7.

5.2.18 **IF** both the Record Sample FCV (FCV-555/655) and the CAM Sample FCV (FCV-556/656) require calibrating, **GO TO** Section 5.7.

5.3 Setup and As-Found Using Citect HMI

NOTE - Unstable FCV operating temperature will cause a shifting output. The minimum FCV operating temperature for reliable testing is 40 °F.

- M&TE flow meter should be connected physically close to FCV.
- Refer to Attachment 1 for specific RTP/Citect HMI operations required for performance of this procedure.

5.3.1 **ENSURE** isolation valve V-553 for Record Sampler is CLOSED.

5.3.2 **ENSURE** isolation valve V-554 for CAM is CLOSED.

5.3.3 **INSTALL** test MT&E Flow Meter for valve under calibration. (See Figure 1)

5.3.4 **CONNECT** input power supply to terminals of TB-73 listed on Data Sheet (VDC).

5.3.5 **CONNECT** DMM M&TE to terminal strip TB73 at terminal listed on Data Sheet (MA).

5.3.6 **OPEN** isolation valve V-553 for Record Sampler,

OR

OPEN isolation valve V-554 for CAM.

5.3.7 **LOGIN** at HMI with password.

5.3.8 **CHECK** cabinet temperature is at least 40°F.

5.3.9 **CHANGE** Exhauster System mode to Manual, from Exhauster Process Detail screen as shown in Attachment 1, Figure B.

5.3.10 **SELECT** the [Fan Control] button **AND**

CHANGE Fan Mode to Manual as shown in Attachment 1, Figure C.

5.3.11 From the Exhauster Process Detail screen, **SELECT** the [Stack Monitor] button.

NOTE - Either pump will draw desired vacuum.

5.3.12 **SELECT** the [Select] button under the vacuum pump to assign a vacuum pump as shown in Attachment 1, Figure D.

5.3 Setup and As-Found Using Citect HMI (Cont.)

5.3.13 **SELECT** the [Start] button to start vacuum pump.

5.3.14 **RECORD** As-Found setpoint for FCV to be calibrated.

NOTE - Prior to obtaining As-Founds, a low flow through FCV is established for reliability.

5.3.15 **SET** flow rate to 0.4 scfm for FCV to be calibrated (for CAM only).

5.3.16 **WAIT** approximately 2 minutes for flow to settle.

As-Found Values

5.3.17 **IF** zero flow cannot be obtained, **TURN** vacuum pump off to obtain zero flow.

5.3.18 **ADJUST** input voltage until M&TE flow matches values listed on Data Sheet.

5.3.19 **RECORD** As-Found MT&E Flowmeter, HMI readout, and mA readings on Data Sheet.

5.3.20 **IF** As-Found values are not within specified tolerance per Data Sheet, **GO TO** Section 5.4,

OR

IF As-Found values are within specified tolerance but deemed marginal and optimization is desired, **GO TO** Section 5.4, at craft's discretion,

OR

IF As-Found values are within specified tolerance, **RECORD** As-Found values in As-Left column of Data Sheet.

5.3.21 **RETURN** FCV setpoint to As-Found value **AND**

RECORD the As-Left value.

5.3.22 **STOP** vacuum pump used for testing.

5.3.23 **SELECT** the [Unselect] button to return pump auto system to normal as shown in Attachment 1, Figure D.

5.3 Setup and As-Found Using Citect HMI (Cont.)

5.3.24 **SELECT** the [Fan Control] button **AND**

RETURN the Fan Mode to Auto as shown in Attachment 1, Figure C.

5.3.25 **RETURN** the System Mode to Auto from the Exhauster Process Detail Screen.

5.3.26 **CLOSE** isolation valve specified on Data Sheet for Record Sampler.

5.3.27 **CLOSE** isolation valve specified on Data Sheet for CAM.

5.3.28 **REMOVE** MT&E used for calibrating.

5.3.29 **IF** testing another FCV, **GO TO** Step 5.3.1 for remaining FCV calibration(s).

5.3.30 **OPEN** isolation valve specified on Data Sheet for Record Sampler.

5.3.31 **OPEN** isolation valve specified on Data Sheet for CAM.

5.3.32 **IF** only the Record Sample FCV (FCV-555/655) required calibrating, **GO TO** Section 5.7.

5.3.33 **IF** only the CAM Sample FCV (FCV-556/656) required calibrating, **GO TO** Section 5.7.

5.3.34 **IF** both the Record Sample FCV (FCV-555/655) and the CAM Sample FCV (FCV-556/656) require calibrating, **GO TO** Section 5.7.

5.4 Zero and Span Adjustment Using Citect HMI

NOTE - Refer to Figure 3 and Figure 4 for trim pot locations.

- Refer to Attachment 1 for specific RTP/Citect HMI operations required for performance of this procedure.

5.4.1 **CHECK** zero flow with vacuum OFF.

5.4.2 **UNPLUG** FCV.

5.4.3 **IF** not previously removed, **REMOVE** cover.

5.4.4 **PLUG** FCV back in.

5.4.5 **SELECT** the [Start] button to start vacuum pump as shown in Attachment 1, Figure D.

5.4.6 **ADJUST** voltage input to 5 VDC **AND**

ADJUST span pot until M&TE flow is equal to 4 SCFM.

5.4.7 **TURN** vacuum pump OFF.

NOTE - When changing pot (located under electronics cover of FCV), M&TE flow will indicate changing flow. This is normal. When both flows match (4.00 scfm), span is complete.

- Span pot is used to adjust M&TE flow.
- Zero pot is used to adjust M&TE current.

5.4.8 **ADJUST** zero pot until M&TE current equals 4.0 ma.

5.4.9 **REPEAT** Steps 5.4.1 through 5.4.8 **UNTIL** desired values are obtained

OR

IF desired value cannot be obtained **NOTIFY** FWS for resolution.

5.4 Zero and Span Adjustment Using Citect HMI (Cont.)

5.4.10 **ADJUST** input voltage to values listed on Data Sheet.

5.4.11 **IF** any values are out of tolerance, **REPEAT** zero and span adjustment.

5.4.12 **IF** values cannot meet tolerance after repeat, **NOTIFY** FWS/Shift Manager.

5.4.13 **RECORD** As-Left readings for flow table and electrical table on Data Sheet.

5.4.14 **RETURN** FCV set point to As-Found value from step 5.3.14 **AND**

RECORD As-Left value.

5.4.15 **SELECT** the [Stop] button to stop vacuum pump as shown in Attachment 1, Figure D.

5.4.16 **UNPLUG** FCV.

5.4.17 **IF** removed, **REINSTALL** cover.

5.4.18 **PLUG** FCV back in.

5.4.19 **SELECT** the [Unselect] button to return pump auto system to normal as shown in Attachment 1, Figure D.

5.4.20 **SELECT** the [Fan Control] button **AND**

RETURN the Fan Mode to Auto as shown in Attachment 1, Figure C.

5.4.21 **RETURN** the System Mode to Auto from the Exhauster Process Detail Screen.

5.4.22 **ENSURE** isolation valve V-553 for Record Sampler is CLOSED.

5.4.23 **ENSURE** isolation valve V-554 for CAM is CLOSED.

5.4.24 **REMOVE** MT&E used for calibrating.

5.4 Zero and Span Adjustment Using Citect HMI (Cont.)

5.4.25 **IF** testing another FCV, **GO TO** Step 5.4.1 for remaining FCV calibration(s).

5.4.26 **OPEN** isolation valve V-553 for Record Sampler,

OR

OPEN isolation valve V-554 for CAM.

5.4.27 **IF** only the Record Sample FCV (FCV-555/655) required calibrating, **GO TO** Section 5.7.

5.4.28 **IF** only the CAM Sample FCV (FCV-556/656) required calibrating, **GO TO** Section 5.7.

5.4.29 **IF** both the Record Sample FCV (FCV-555/655) and the CAM Sample FCV (FCV-556/656) require calibrating, **GO TO** Section 5.7.

5.5 Setup and As-Found Using ABB HMI

NOTE - Unstable FCV operating temperature will cause a shifting output. The minimum FCV operating temperature for reliable testing is 40 °F.

- M&TE flow meter should be connected physically close to FCV.
- Refer to Attachment 2 for specific ABB HMI operations required for performance of this procedure.

5.5.1 **INSTALL** test MT&E Flow Meter for valve under calibration. (See Figure 1)

5.5.2 **CONNECT** input power supply to terminals of TB-73 listed on Data Sheet (VDC).

5.5.3 **CONNECT** DMM M&TE to terminal strip TB73 at terminal listed on Data Sheet (MA).

5.5.4 **ENSURE** isolation valve V-553 for Record Sampler is CLOSED.

5.5.5 **ENSURE** isolation valve V-554 for CAM is CLOSED.

5.5.6 **CLOSE** isolation valve specified on Data Sheet for valve under calibration.

5.5.7 **LOGIN** at HMI with password.

5.5.8 **RECORD** MT&E data of test equipment used in Asset section of Data Sheet.

5.5.9 **CHECK** cabinet temperature is at least 40 F.

5.5.10 **SELECT** the pump/fan icon **AND**

CHANGE the Exhauster Fan Mode to Manual from the faceplate as shown in Attachment 2, Figure H.

5.5.11 **SELECT** the [Stack Sampler] button to get to the Vacuum Pump screen shown in Attachment 2, Figure I.

NOTE - Either pump will draw desired vacuum.

5.5.12 **SELECT** the pump/fan icon **AND**

CHANGE the Vacuum Pump Mode to Manual from the faceplate.

5.5 Setup and As-Found Using ABB HMI (Cont.)

5.5.13 **SELECT** the pump/fan icon **AND**

START the Vacuum Pump from the faceplate.

5.5.14 **RECORD** As-Found setpoint for FCV to be calibrated.

NOTE - Prior to obtaining As-Founds, a low flow through FCV is established for reliability.

5.5.15 **SET** flow rate to 0.4 scfm for FCV to be calibrated (for CAM only).

5.5.16 **WAIT** approximately 2 minutes for flow to settle.

As-Found Values

5.5.17 **IF** zero flow cannot be obtained, **TURN** vacuum pump off from the faceplate to obtain zero flow.

5.5.18 **ADJUST** input voltage **UNTIL** M&TE flow matches values listed on Data Sheet.

5.5.19 **RECORD** the following on Data Sheet:

- As-Found MT&E Flowmeter
- HMI readout
- mA readings.

5.5.20 **IF** As-Found values are not within specified tolerance per Data Sheet, **GO TO** Section 5.4,

OR

IF As-Found values are within specified tolerance but deemed marginal and optimization is desired, **GO TO** Section 5.4, at craft's discretion,

OR

IF As-Found values are within specified tolerance, **RECORD** As-Found values in As-Left column of Data Sheet.

5.5.21 **RETURN** FCV setpoint to As-Found value **AND**

RECORD the As-Left value.

5.5 Setup and As-Found Using ABB HMI (Cont.)

5.5.22 **FROM** the Vacuum Pump faceplate, **STOP** the Vacuum Pump used for testing **AND**

CHANGE the mode to Auto.

5.5.23 **ON** the Exhauster Process Details screen, **SELECT** the pump/fan icon **AND**

CHANGE the Exhauster Fan Mode to Auto from the faceplate as shown in Attachment 2, Figure H.

5.5.24 **ENSURE** isolation valve V-553 for Record Sampler is CLOSED.

5.5.25 **ENSURE** isolation valve V-554 for CAM is CLOSED.

5.5.26 **REMOVE** MT&E used for calibrating.

5.5.27 **IF** testing another FCV, **GO TO** Step 5.1.1 for remaining FCV calibration(s).

5.5.28 **OPEN** isolation valve V-553 for Record Sampler,

OR

OPEN isolation valve V-554 for CAM.

5.5.29 **IF** only the Record Sample FCV (FCV-555/655) required calibrating, **GO TO** Section 5.7.

5.5.30 **IF** only the CAM Sample FCV (FCV-556/656) required calibrating, **GO TO** Section 5.8.

5.5.31 **IF** both the Record Sample FCV (FCV-555/655) and the CAM Sample FCV (FCV-556/656) required calibrating, **GO TO** Section 5.7.

5.6 Zero and Span Adjustment Using ABB HMI

NOTE - Refer to Figure 3 and Figure 4 for trim pot locations.

- Refer to Attachment 2 for specific ABB HMI operations required for performance of this procedure.

5.6.1 **CHECK** zero flow with vacuum OFF.

5.6.2 **UNPLUG** FCV.

5.6.3 **IF** not previously removed, **REMOVE** cover.

5.6.4 **PLUG** FCV back in.

5.6.5 **FROM** the faceplate, **START** the Vacuum Pump.

5.6.6 **ADJUST** voltage input to 5 VDC.

5.6.7 **ADJUST** span pot **UNTIL** M&TE flow is equal to 4 SCFM.

5.6.8 **FROM** the faceplate, **TURN** vacuum pump OFF.

NOTE - When changing pot (located under electronics cover of FCV), M&TE flow will indicate changing flow. This is normal. When both flows match (4.00 scfm), span is complete.

- Span pot is used to adjust M&TE flow.
- Zero pot is used to adjust M&TE current.

5.6.9 **ADJUST** zero pot **UNTIL** M&TE current equals 4.0 ma.

5.6.10 **REPEAT** Steps 5.4.1 through 5.4.8 **UNTIL** desired values are obtained

OR

IF desired value cannot be obtained **NOTIFY** FWS for resolution.

5.6.11 **ADJUST** input voltage to values listed on Data Sheet.

5.6.12 **IF** any values are out of tolerance, **REPEAT** zero and span adjustment.

5.6.13 **IF** values cannot meet tolerance after repeat, **NOTIFY** FWS/Shift Manager.

5.6.14 **RECORD** As-Left readings for flow table and electrical table on Data Sheet.

5.6 Zero and Span Adjustment Using ABB HMI (Cont.)

5.6.15 **RETURN** FCV set point to As-Found value from step 5.3.14 **AND**

RECORD As-Left value.

5.6.16 **FROM** the faceplate, **STOP** the Vacuum Pump.

5.6.17 **UNPLUG** FCV.

5.6.18 **IF** removed, **REINSTALL** cover.

5.6.19 **PLUG** FCV back in.

5.6.20 **SELECT** the [Unselect] button to return pump auto system to normal as shown in Attachment 1, Figure D.

5.6.21 **SELECT** the [Fan Control] button **AND**

RETURN the Fan Mode to Auto as shown in Attachment 1, Figure C.

5.6.22 **RETURN** the System Mode to Auto from the Exhauster Process Detail Screen.

5.6.23 **ENSURE** isolation valve V-553 for Record Sampler is CLOSED.

5.6.24 **ENSURE** isolation valve V-554 for CAM is CLOSED.

5.6.25 **REMOVE** MT&E used for calibrating.

5.6.26 **IF** testing another FCV, **GO TO** Step 5.3.1 for remaining FCV calibration(s).

5.6.27 **OPEN** isolation valve V-553 for Record Sampler,

OR

OPEN isolation valve V-554 for CAM.

5.6.28 **IF** only the Record Sample FCV (FCV-555/655) required calibrating, **GO TO** Section 5.7.

5.6.29 **IF** only the CAM Sample FCV (FCV-556/656) required calibrating, **GO TO** Section 5.8.

5.6.30 **IF** both the Record Sample FCV (FCV-555/655) and the CAM Sample FCV (FCV-556/656) require calibrating, **GO TO** Section 5.7.

5.7 Record Sample Flow Proportionality

NOTE - This section only applies to record sampler flow control valves.

- This section is not applicable to first time calibration (CGA).

5.7.1 **CONFIRM** record sample FCV is calibrated.

5.7.2 **CONFIRM** exhaust train is running, per one of the following Operating Procedures:

- TO-060-106, Operate 241-AN VTP Exhauster (not for CGA)
- TO-060-107, Operate 241-AW VTP Exhauster (not for CGA)
- TO-060-108, Operate POR107 Portable Exhaust Ventilation System.

5.7.3 **WAIT** for exhauster to stabilize (approx. 10 minutes).

5.7.4 **RECORD** Stack Flow (scfm) on Data Sheet, indicated on Exhauster Process Detail screen.

5.7.5 **RECORD** Record Sample Flow Rate on Data Sheet, indicated on AMS-4 HMI screen.

5.7.6 **CALCULATE AND RECORD** remaining items on Data Sheet.

5.7.7 **IF** % Difference on Data Sheet is $\geq$ 10%, **NOTIFY** Engineering.

5.8 Restoration Using Citect HMI

5.8.1 **CONFIRM** all test equipment is disconnected and removed.

5.8.2 **RECORD** Test Equipment information and calibration status on Data Sheet.

5.8.3 **REINSTALL** any pipe plugs and wiring removed.

5.8.4 **OPEN** isolation valve specified on Data Sheet.

5.8.5 **UNSELECT** vacuum pump from Stack Sampler screen as shown in Attachment 1, Figure D.

5.8.6 **SELECT** the [Fan Control] button **AND**

RETURN Fan Mode to Auto as shown in Attachment 1, Figure C.

5.8.7 **RETURN** Exhauster system mode to Auto from Exhauster Process Detail Screen as shown in Attachment 1, Figure B.

5.8.8 **CONFIRM** equipment system restoration by observing indications are consistent with expected conditions.

5.8.9 **PERFORM** post-job survey. **(TFC-ESHQ-ENV-STD-06)**

5.9 Restoration Using ABB HMI

5.9.1 **CONFIRM** all test equipment is disconnected and removed.

5.9.2 **RECORD** Test Equipment information and calibration status on Data Sheet.

5.9.3 **REINSTALL** any pipe plugs and wiring removed.

5.9.4 **OPEN** isolation valve specified on Data Sheet.

5.9.5 **FROM** the Vacuum Pump faceplate, **RETURN** Vacuum Pump to Auto.

5.9.6 **FROM** the Exhauster Process Detail screen, **RETURN** Exhauster Fan Mode to Auto from the Exhauster Fan faceplate.

5.9.7 **CONFIRM** equipment system restoration by observing indications are consistent with expected conditions.

5.9.8 **PERFORM** post-job survey. (TFC-ESHQ-ENV-STD-06)

5.10 Review

5.10.1 **INFORM** responsible Shift Manager calibration is complete.

5.10.2 **INFORM** FWS calibration is complete.

5.10.3 The FWS **MUST REVIEW AND ENSURE** the following:

- Completed Data Sheet meets acceptance criteria
- Comment sections are filled out appropriately
- Work requests needed as a result of this procedure are identified and generated
- Work request number(s) of any work documents generated as a result of this procedure, are recorded in Comments/Remarks section of Data Sheet.

5.11 Records

NOTE - The performance of this procedure generates no records. However PMIDs associated with the procedure, identified by CHAMPS for the activity, are record material and are maintained in the CHAMPS work package as record material.

- The identified record custodian is responsible for record management in accordance with TFC-BSM-IRM_DC-C-02 or other applicable requirements.

Figure 1 - Rotometer Connection

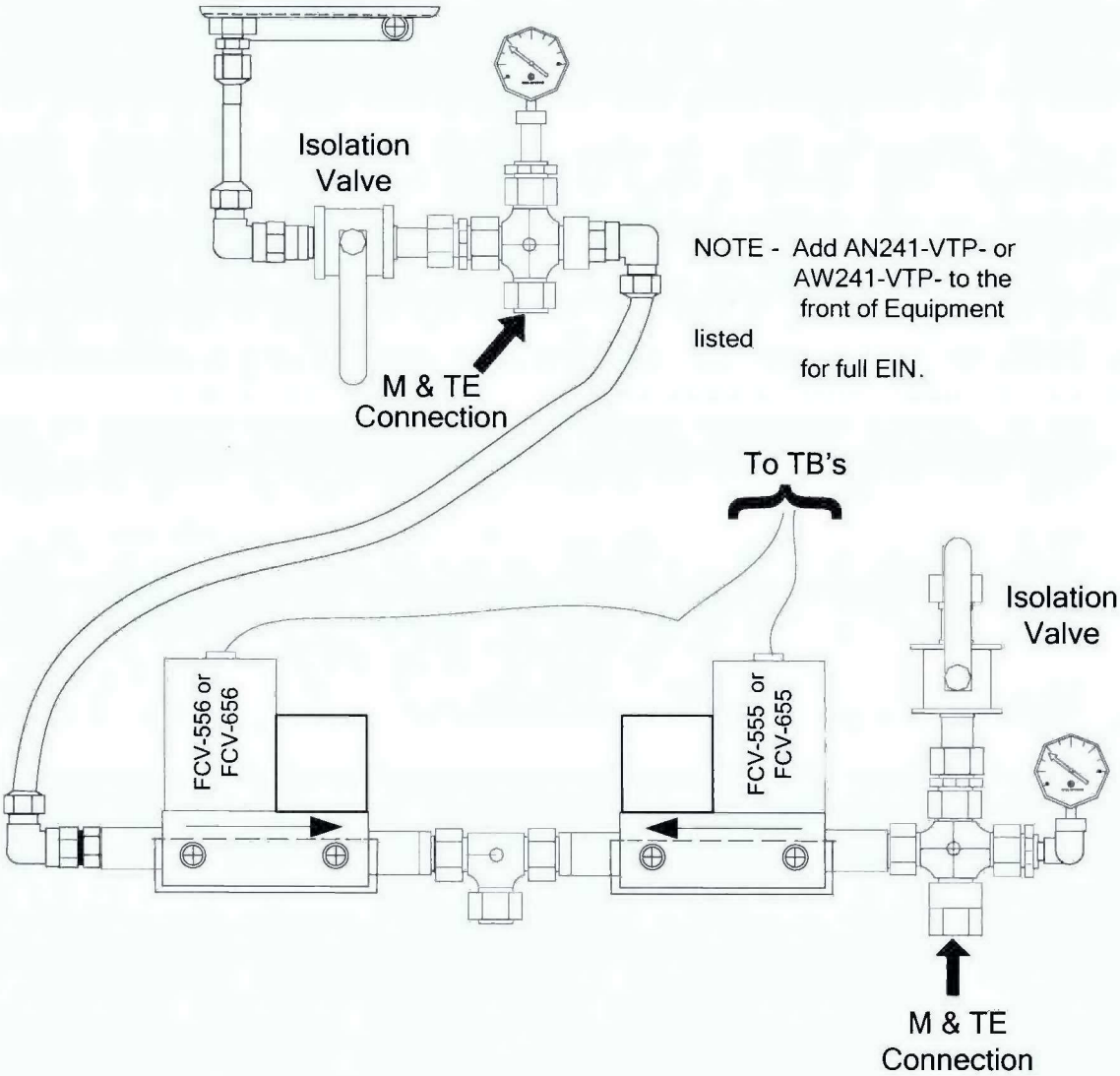

Figure 2 - Bench Test Setup

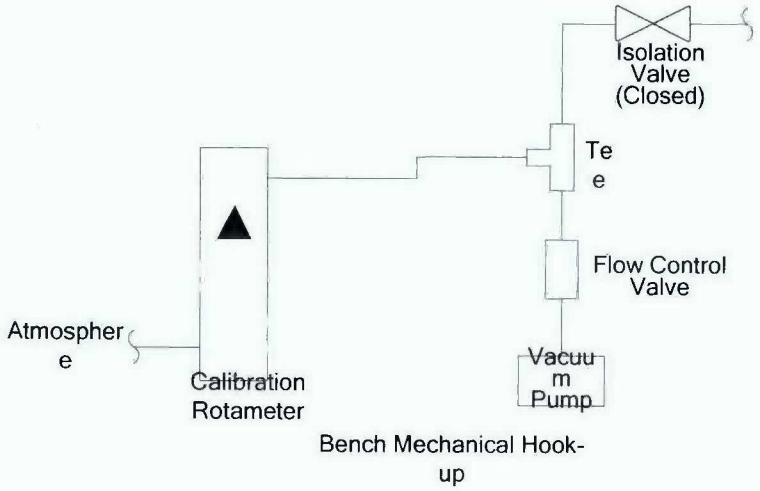

Bench Mechanical Hook-up

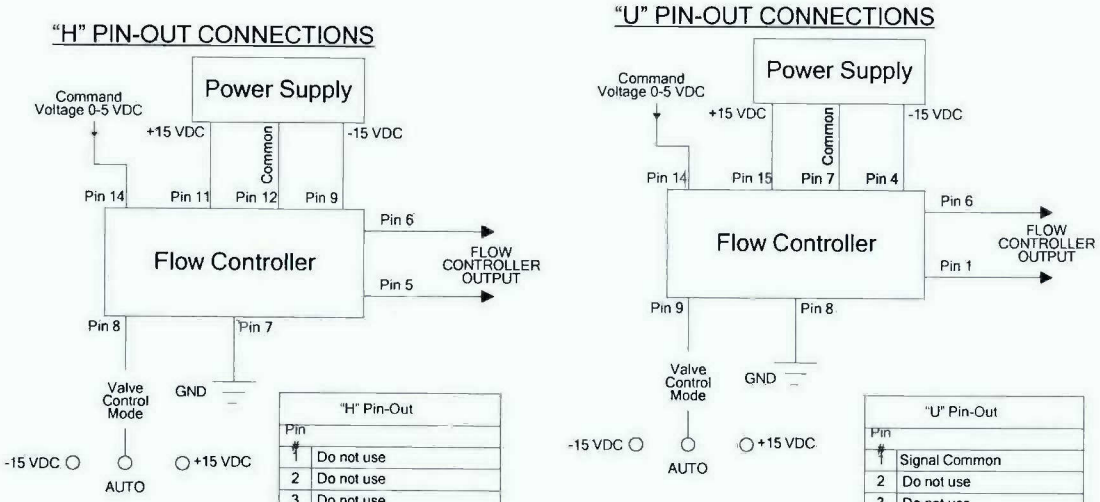

"H" Pin-Out	
Pin #	
1	Do not use
2	Do not use
3	Do not use
4	Do not use
5	Signal Common
6	~~Output 0-5 VDC (4-20 mA)~~
7	Case Ground
8	Valve Override
9	-15 VDC
10	Do not use
11	+15 VDC
12	Signal Common
13	External Input
14	Set Point 0-5 VDC (4-20 mA)
15	Do not use

"U" Pin-Out	
Pin #	
1	Signal Common
2	Do not use
3	Do not use
4	+15 VDC
5	
6	~~Output 0-5 VDC (4-20 mA)~~
7	Signal Common
8	Case Ground
9	Valve Override
10	
11	-15 VDC
12	External Input
13	Signal Common
14	Signal Common
15	Set Point 0-5 VDC (4-20 mA)

Bench Electrical Hook-up

Figure 3 - Trim Pot Locations

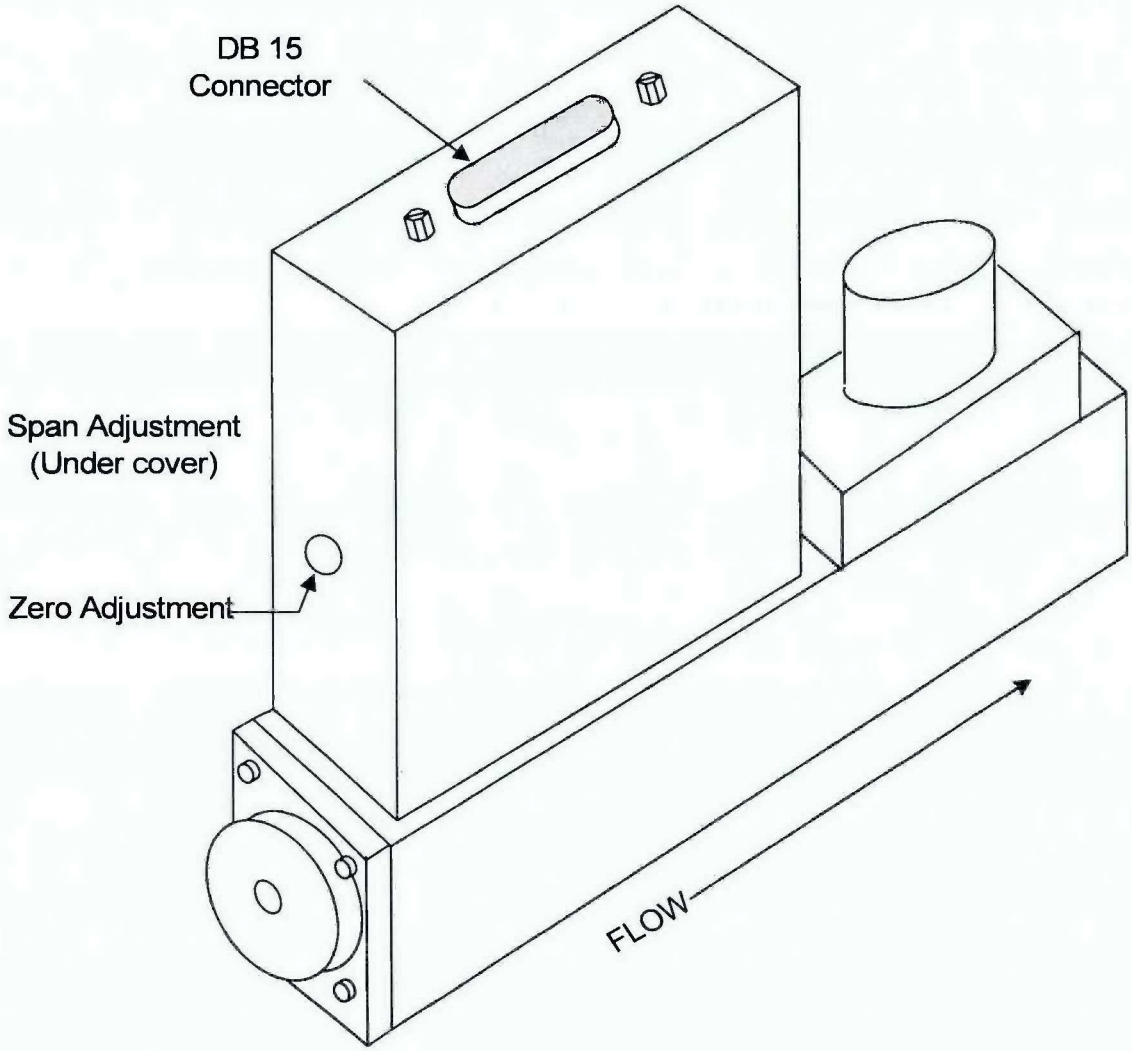

Figure 4 - FCV Electronics

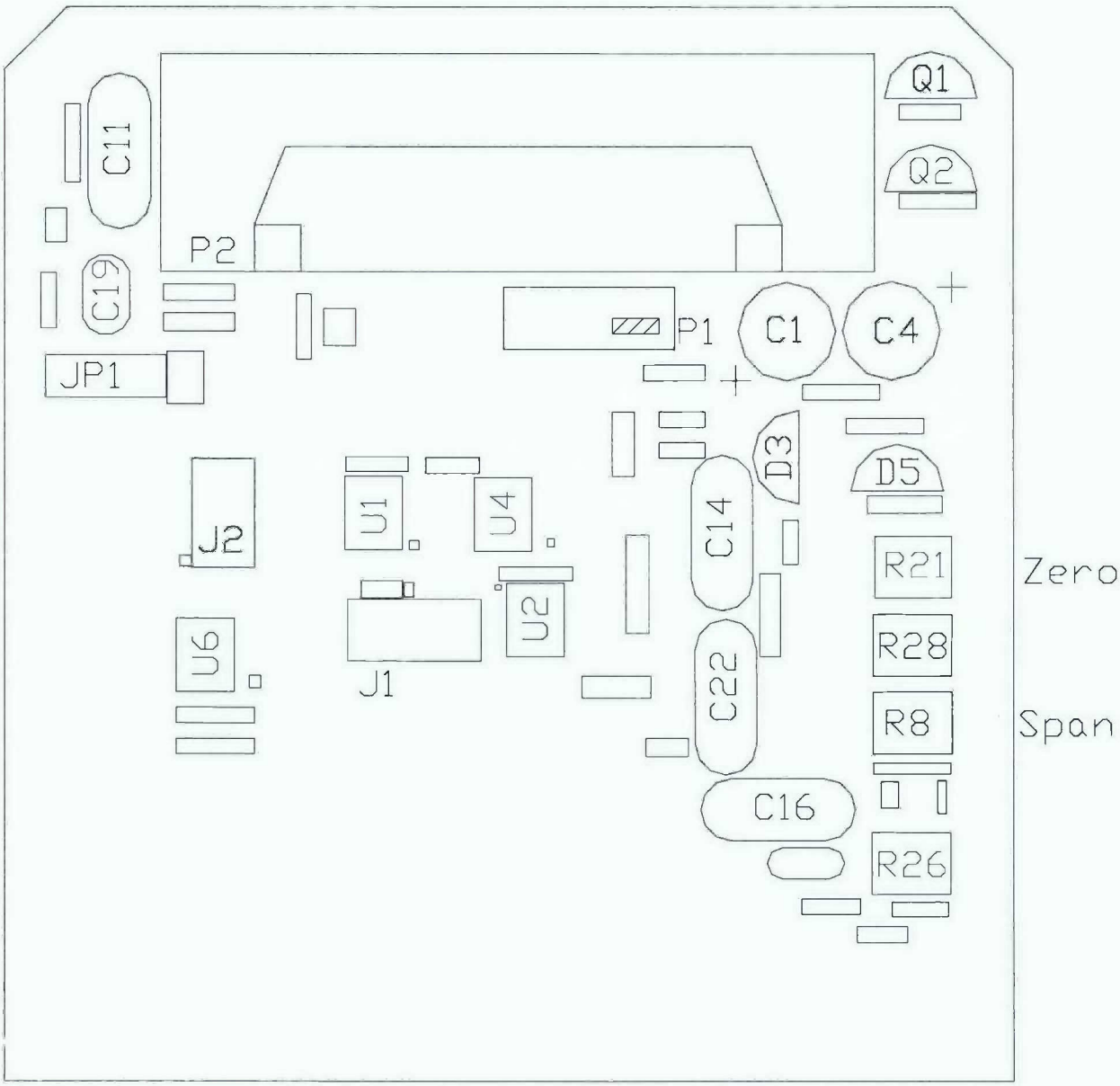

Attachment 1 - RTP/Citect HMI Operations

1.) System Navigation

Press [F2] to bring up the System Navigation screen (Shown for AN Farm in Figure A).

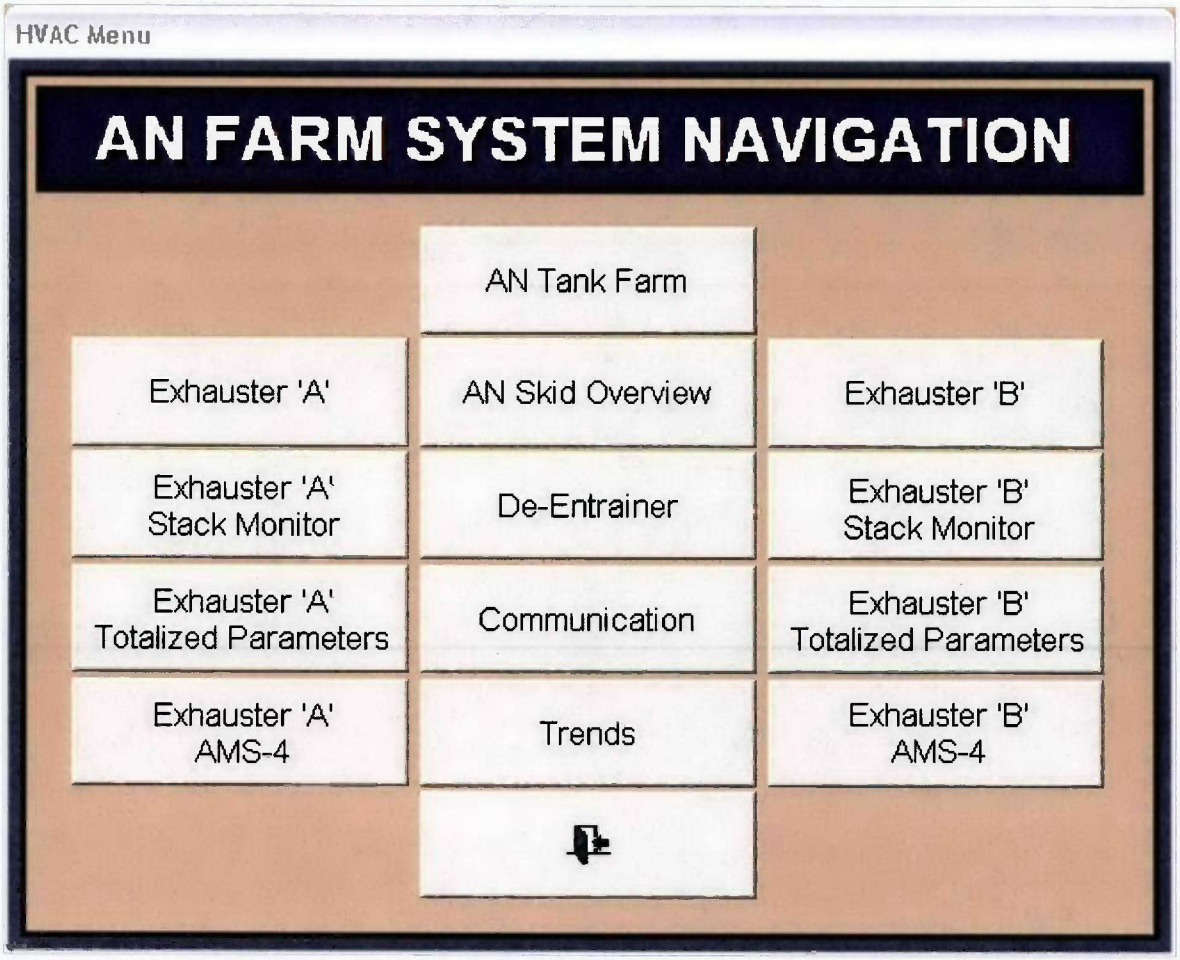

Figure A – System Navigation

Attachment 1 - RTP/Citect HMI Operations (Cont.)

2.) Exhauster Process Detail Screen (Figure B)

1.) Stack Flow is obtained from this screen (Upper right corner).
2.) System Mode is changed here (Click on System mode to change).
3.) Fan Mode is changed here (Click on Fan Control [Figure C], then Auto/Manual to change).
4.) Click on Stack Monitor (right side) to go to Stack Monitor Screen).

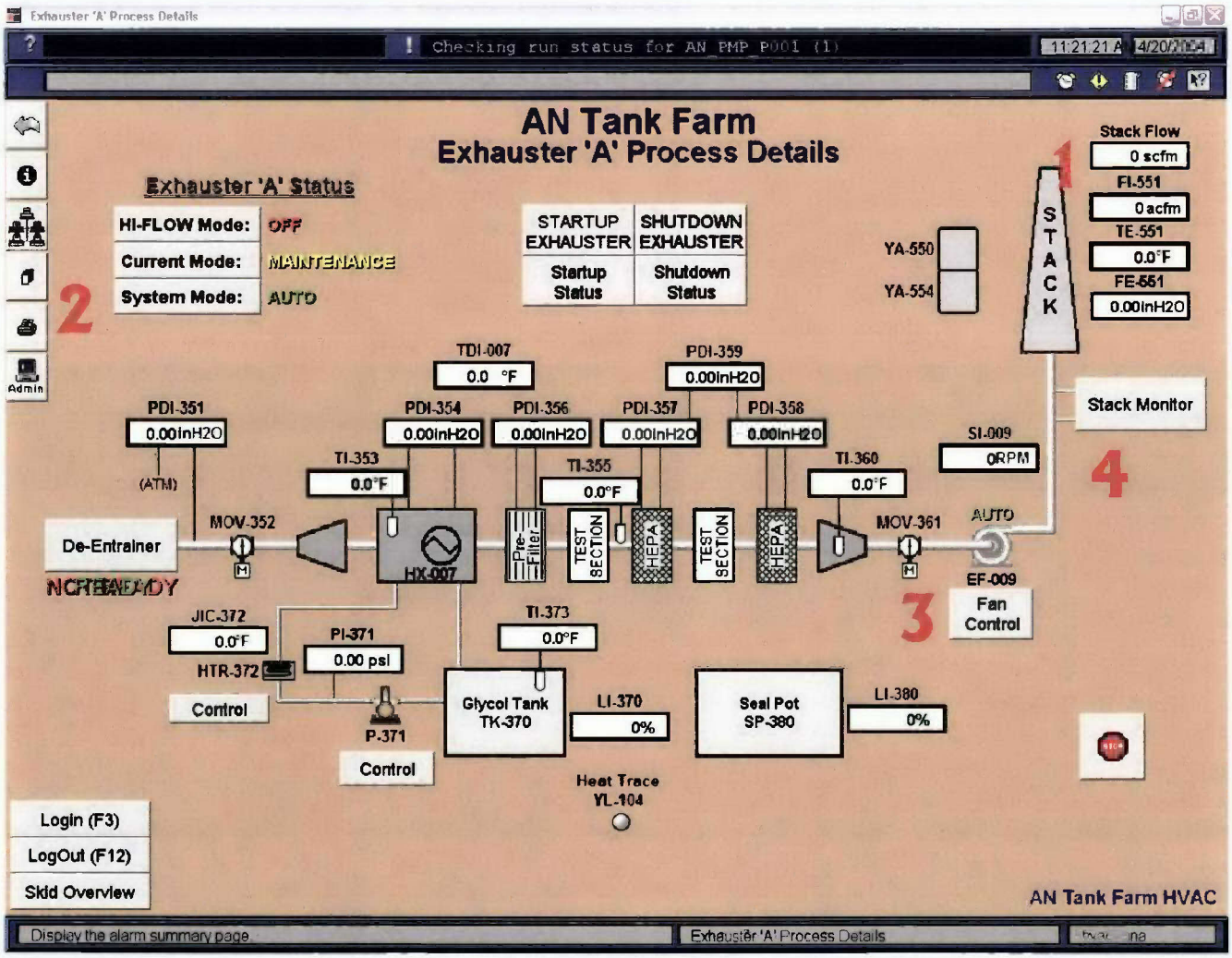

Figure B – Exhauster Process Detail Screen

Attachment 1 - RTP/Citect HMI Operations (Cont.)

3.) Fan Control (Figure C)

3.) Change Fan Mode here (Click Auto/Manual to change).

Figure C – Fan Control

Attachment 1 - RTP/Citect HMI Operations (Cont.)

4.) Stack Sampler Screen (Figure D)

5.) Change FCV setpoints here.
6.) Select, Start, Stop, Unselect vacuum pumps here.

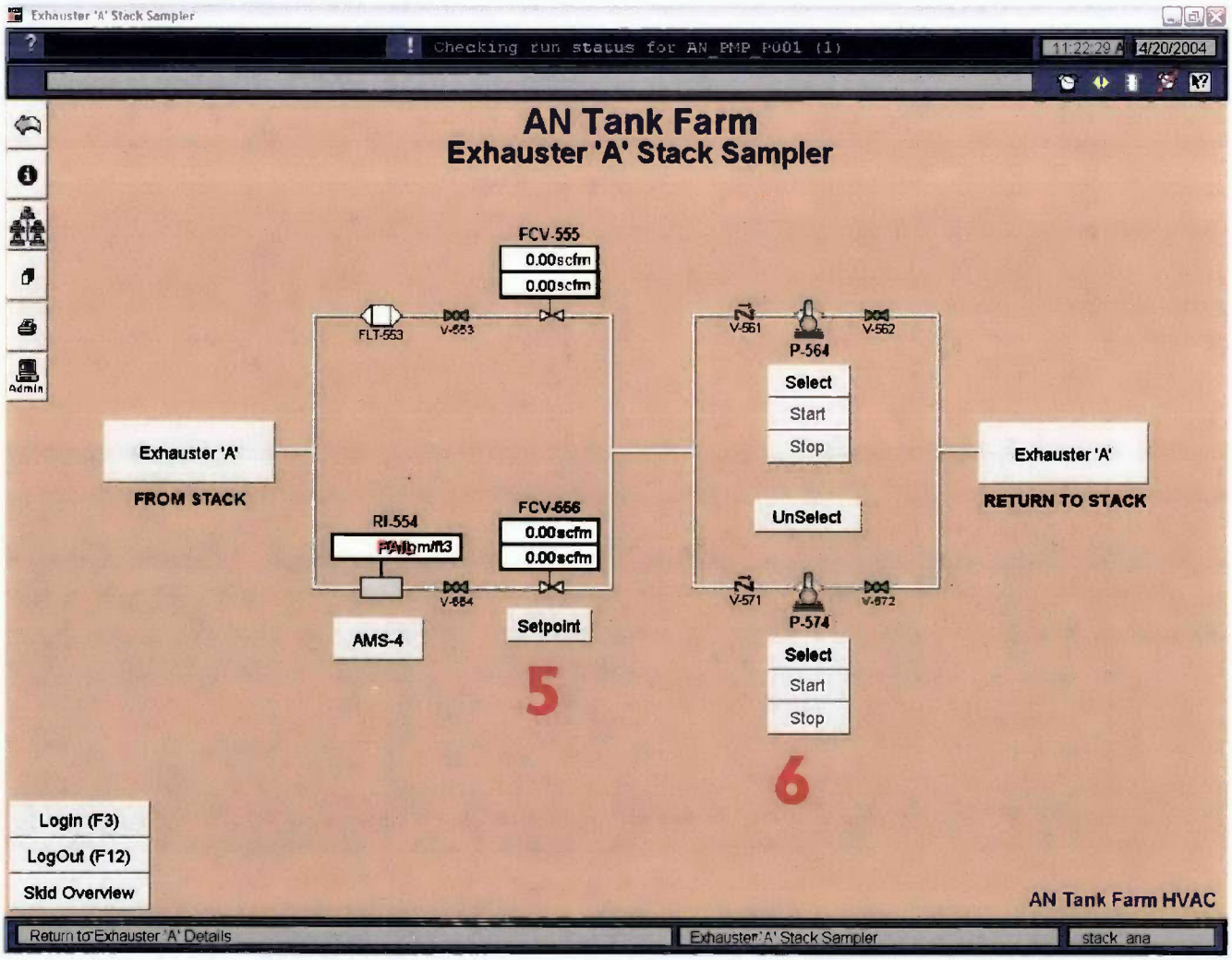

Figure D – Stack Sampler Screen

Attachment 1 - RTP/Citect HMI Operations (Cont.)

5.) AMS-4 Screen (Figure E)

7.) Obtain Record Sample Flow rate here, for Proportionality Test.

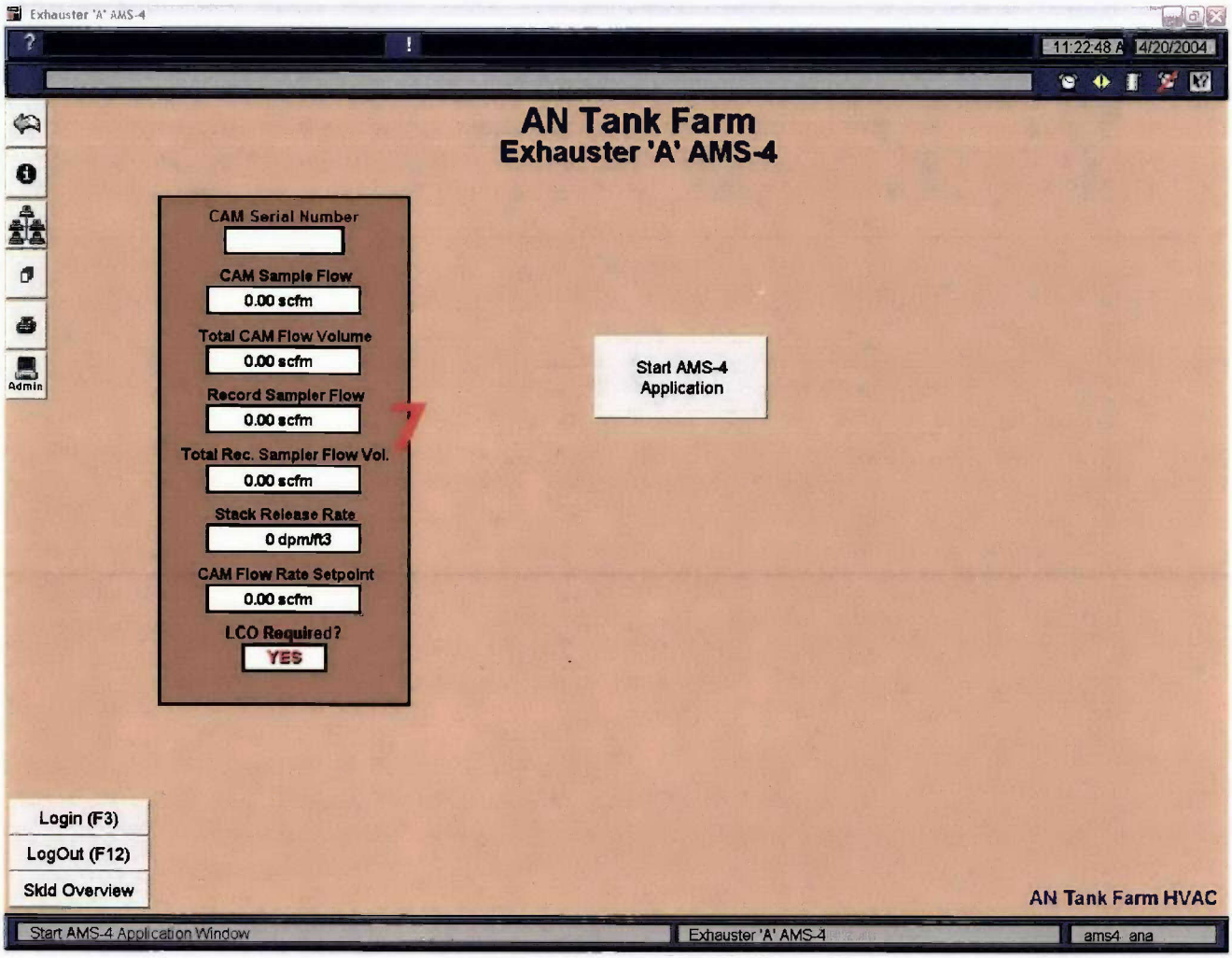

Figure E – AMS-4 Screen

Attachment 2 – ABB HMI Operations

1.) Exhauster Overview

Navigate to Primary Ventilation Exhausters Overview screen (Shown for AW Farm).

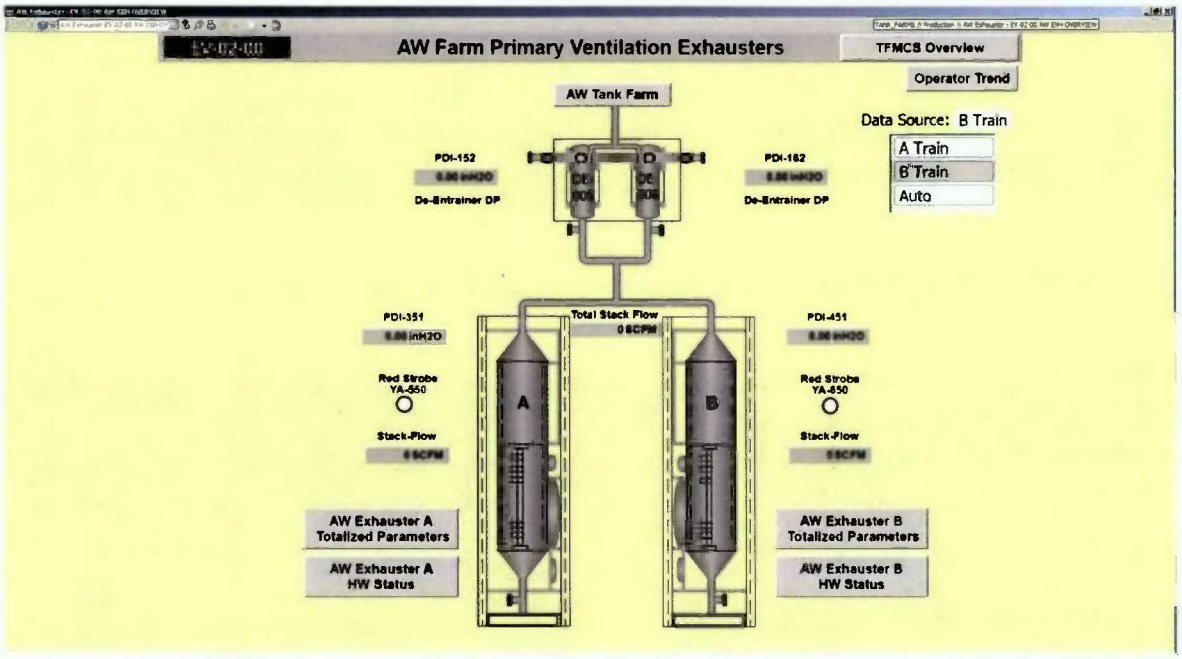

Figure F – System Navigation

Attachment 2 – ABB HMI Operations (Cont.)

Exhauster Process Details Screen (Figure G)

1.) Stack Flow is obtained from this screen (Upper right corner).
2.) Fan Mode is changed here (Click on Fan to open Faceplate [Figure H]).
3.) Click on Stack Sampler (right side) to go to Stack Monitor Screen [Figure I]).

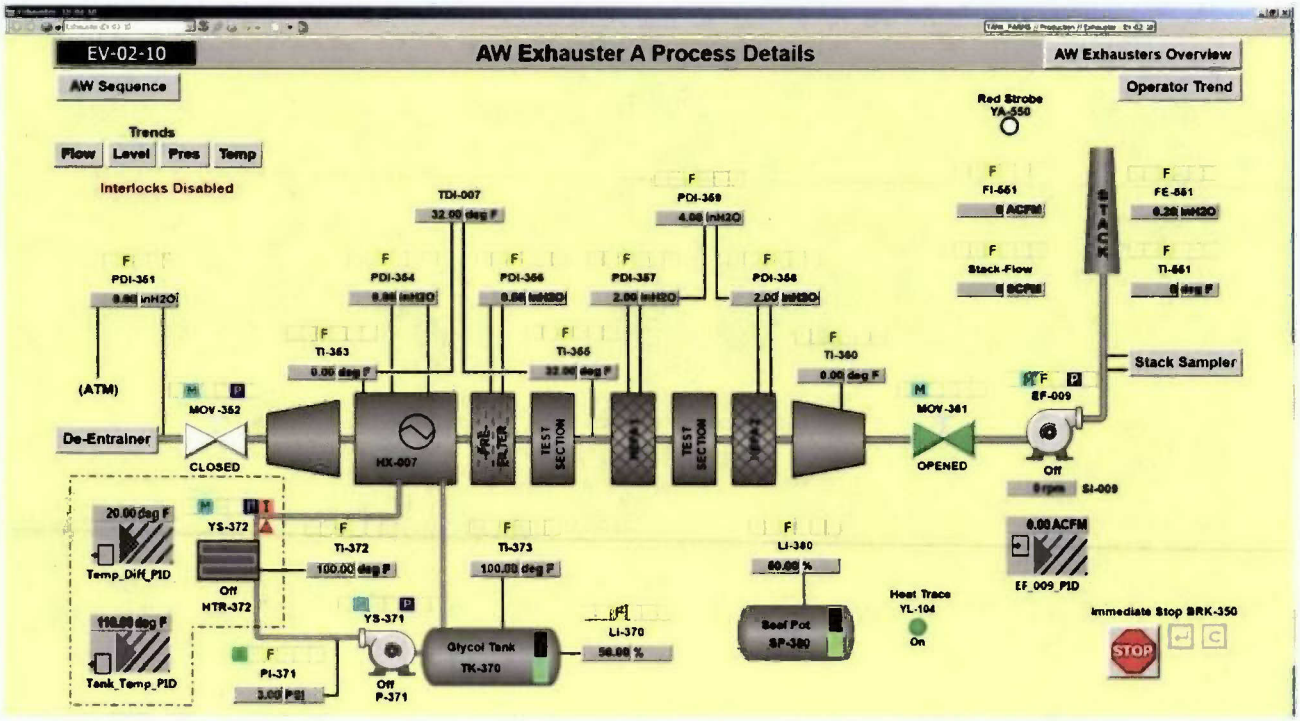

Figure G – Exhauster Process Details Screen

Attachment 2 – ABB HMI Operations (Cont.)

3.) Fan Faceplate (Figure H)

4.) Change Fan Mode here (Select Auto/Manual icon to change).

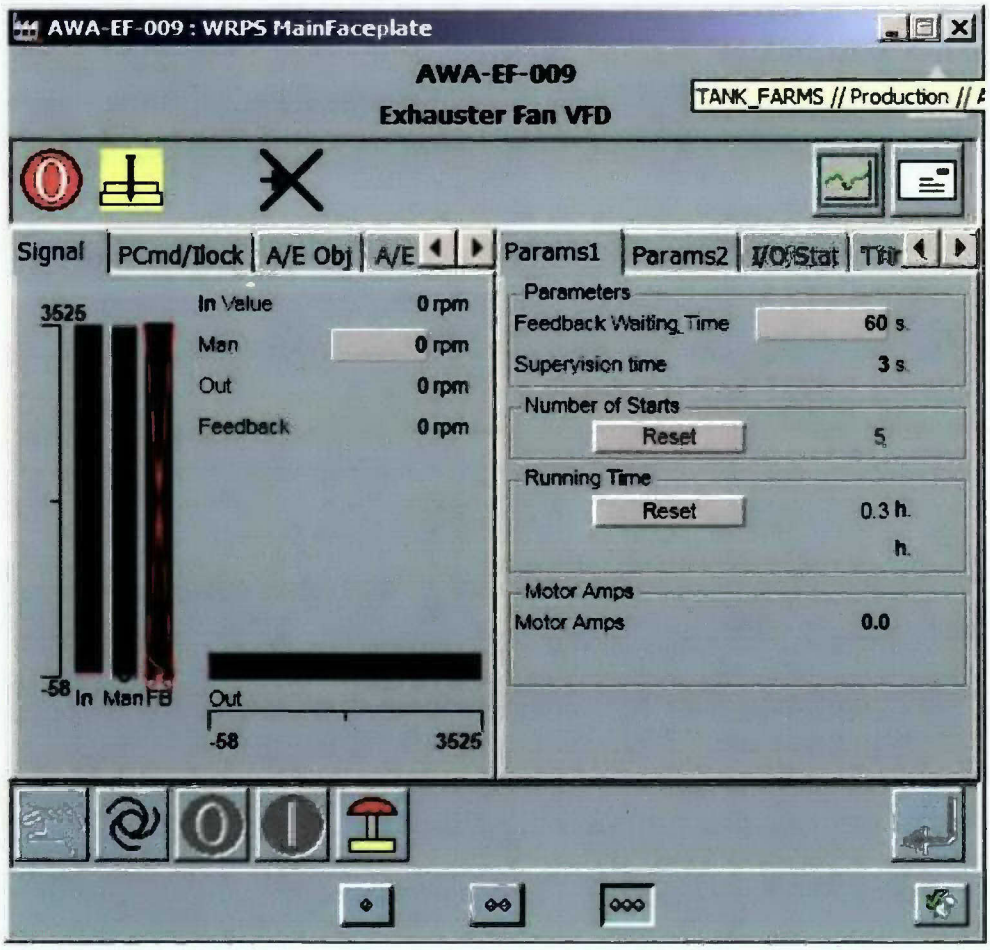

Figure H – Fan Extended Faceplate

Attachment 2 – ABB HMI Operations (Cont.)

4.) Stack Sampler Screen (Figure I)

5.) FCV setpoint is changed here (Click on FCV to open Faceplate [Figure J]).
6.) Pump Mode is changed here (Click on Pump to open Faceplate [Figure K]).

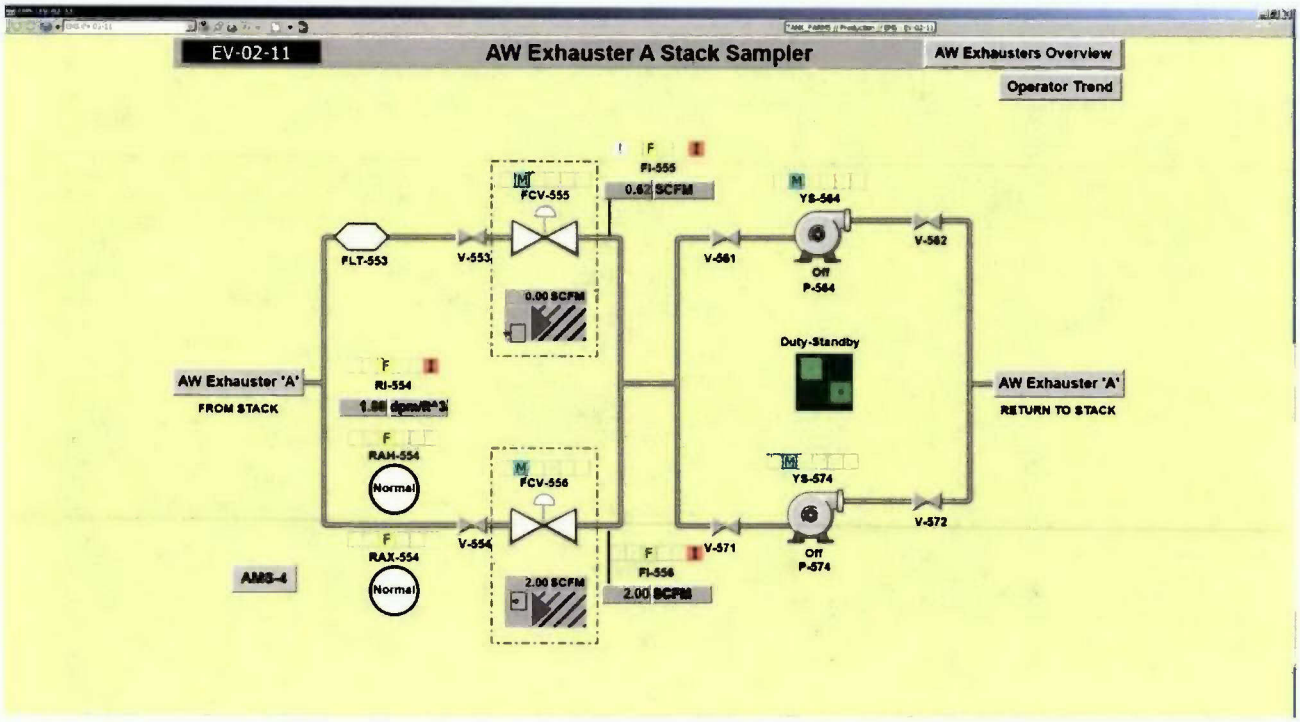

Figure I – Stack Sampler Screen

Attachment 2 – ABB HMI Operations (Cont.)

5.) Stack Sampler Screen (Figure I)

7.) Change FCV Max setpoint value here.

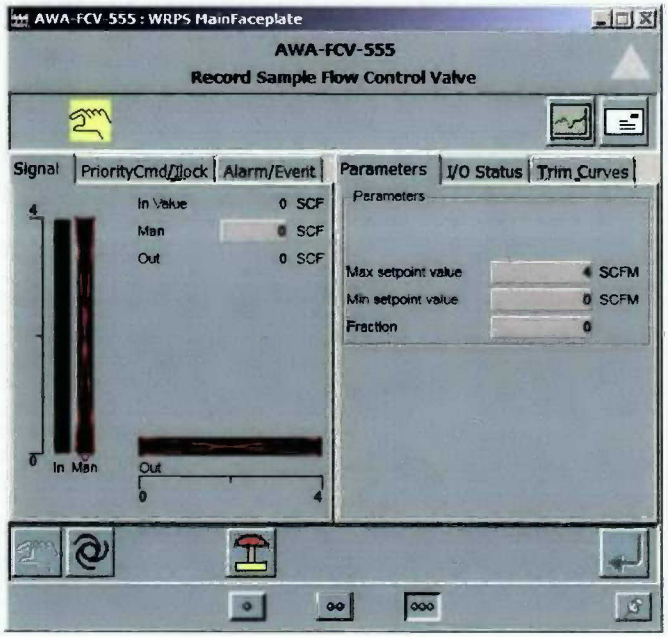

Figure J – FCV Extended Faceplate

Attachment 2 – ABB HMI Operations (Cont.)

6.) Stack Sampler Screen (Figure K)

8.) Change Punp Mode here (Select Auto/Manual icon to change).

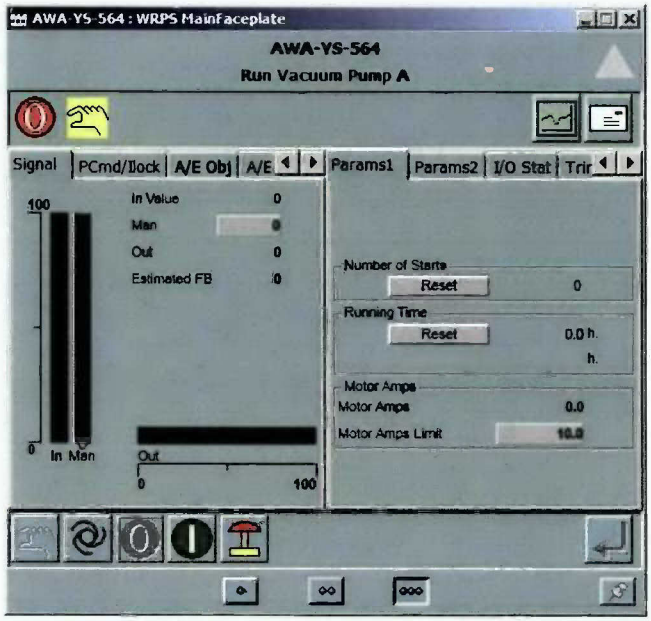

Figure K – Pump Extended Faceplate

Attachment 2 – ABB HMI Operations (Cont.)

7.) AMS-4 Screen (Figure L)

9.) Obtain Record Sample Flow rate here, for Proportionality Test.

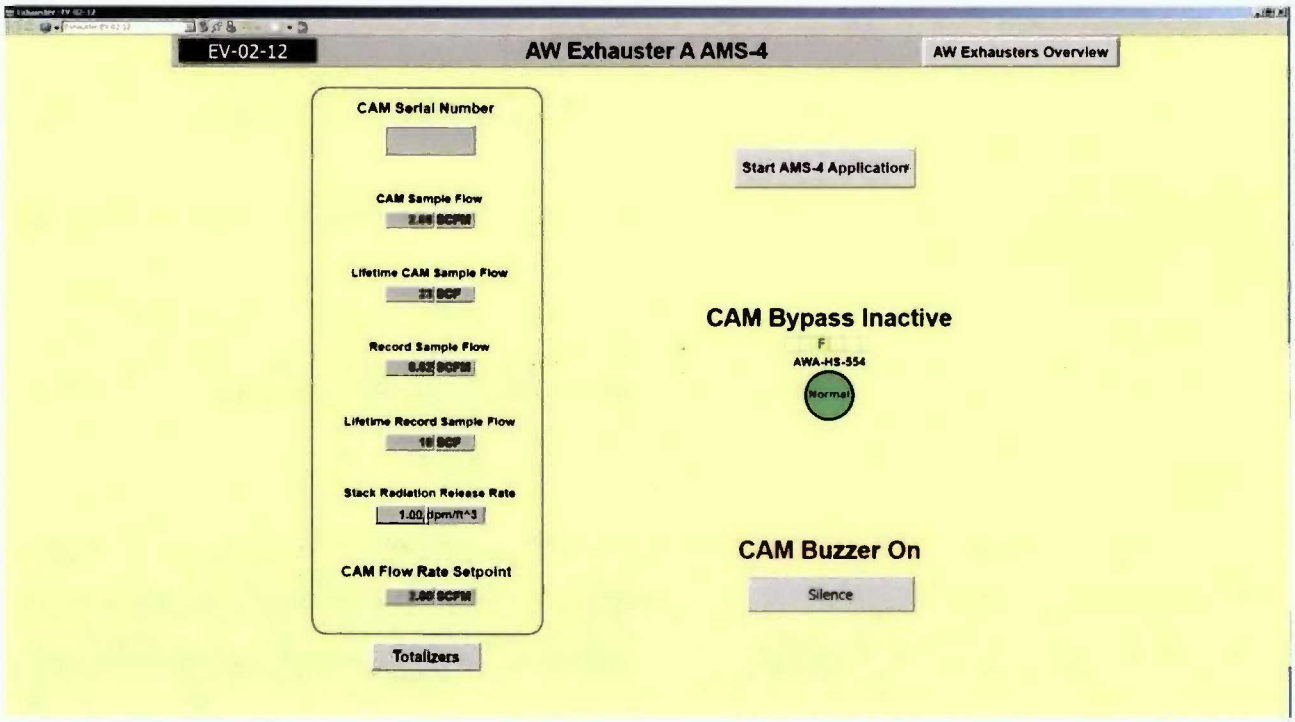

Figure L – AMS-4 Screen

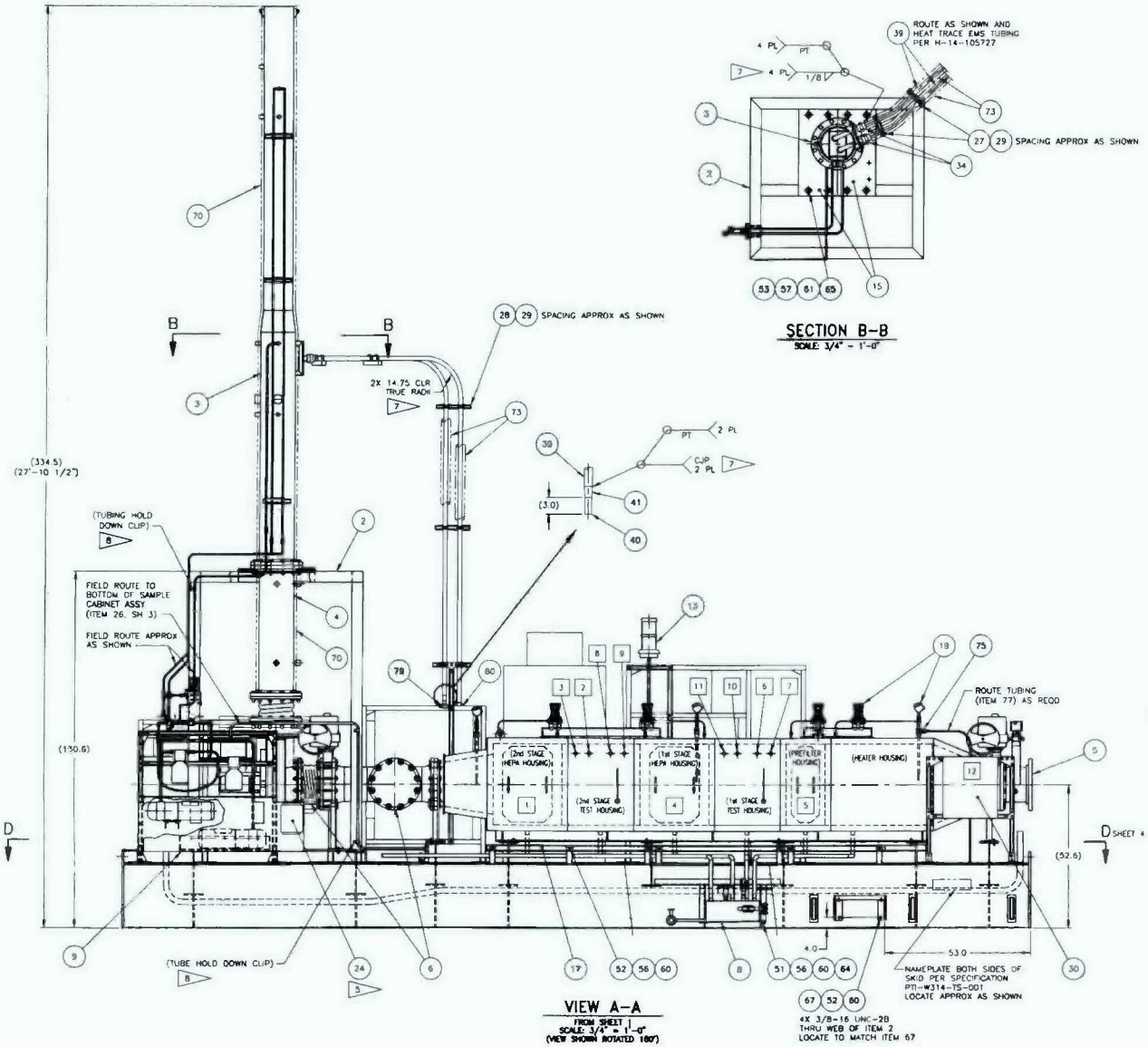

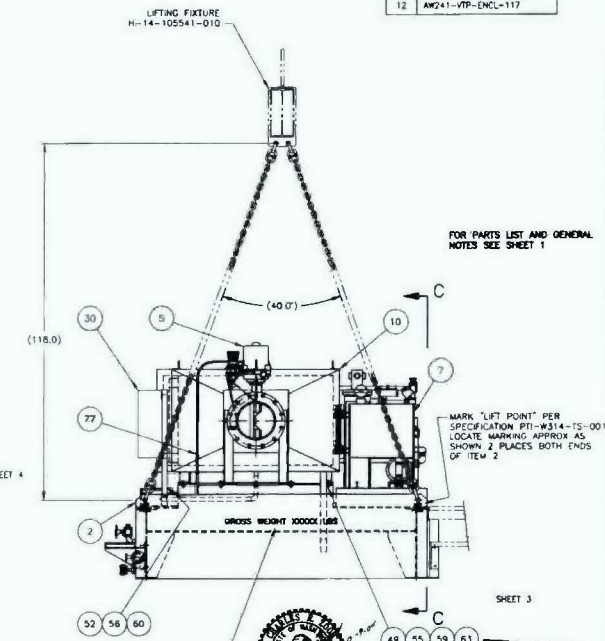

FOR PARTS LIST AND GENERAL NOTES SEE SHEET 1

X = EQPT IDENT NO 8	
1	AW241-VTP-FLT-453
2	AW241-VTP-FTP-457
3	AW241-VTP-FTP-454
4	AW241-VTP-FLT-452
5	AW241-VTP-FLT-451
6	AW241-VTP-FTP-451
7	AW241-VTP-FTP-455
8	AW241-VTP-FTP-453
9	AW241-VTP-FTP-456
10	AW241-VTP-FTP-458
11	AW241-VTP-FTP-459
12	AW241-VTP-ENCL-117

DIMENSIONING AND TOLERANCING SHALL BE INTERPRETED PER ANSI Y14.5M-1994
DIMENSIONS ARE IN INCHES UNLESS OTHERWISE SPECIFIED
UNSPECIFIED TOLERANCES SHALL BE
DECIMAL .X ± .1 .XX ± .06 .XXX ± .030
ANGULAR ± 1°
ALL IMPLIED 90° ANGLES SHALL BE PERPENDICULAR WITHIN THE GREATEST TOLERANCE OF THE LINEAR DIMENSIONS
ALL COAXIAL FEATURES SHALL BE CONCENTRIC WITHIN .031 INCH UNLESS OTHERWISE SPECIFIED

DWG NO	TITLE
DRAWING TRACEABILITY LIST	

REF NUMBER	TITLE
NEXT USED ON SHEET 1	REFERENCES

REV						
2	INCORPORATED DCN-AW247					
1	-AW102, -AW153, -AW170 & AS-BUILT INCORPORATED DCN-AW061, -AW063.					
0	RELEASED FOR CONSTRUCTION	NA	NA	NA	NA	

REVISIONS

NAME
DR. K. FISHER
CHECKED
ENGINEER
DATE 01/31/08

U.S. DEPARTMENT OF ENERGY
Office of River Protection

AW241 EXHAUSTER TRAIN "B" ASSEMBLY

SIZE	SYSTEM NO	DWG NO	DWG NO	REV
F	241AW	89900	H-14-105693	2

SCALE SHOWN | DATE 8209.36 | SHEET 2 OF 8

PREMIER Technology, Inc.
GFORCE

AUG 12 2008
RICHLAND, WASHINGTON
STATE OF WASHINGTON

32684

Yokogawa Instruments EJA 110 & 120 Differential Pressure Transmitter

Tank Farm Maintenance Procedure **MAINTENANCE**

USQ #N/A (Routine Maintenance)

Justification:

Engineering request

Summary of Changes:

Modified wording in Section 1.1. Globally deleted/modified wording to eliminate vague phrases. Modified wording in second and third NOTEs preceding Section 5.1. Added a new NOTE preceding Section 5.1. Deleted NOTES for Steps 5.1.1 and 5.2.5. Modified wording in Steps 5.1.2, 5.1.3, and 5.2.5. Added new Steps 5.2.6, 5.7.5, and 5.7.6. Modified title in Attachments 1 and 2. Modified table in Step 4 of Attachment 2. Added new Attachment 3.

Next Periodic Review Date - 07/14/2014

Click for copy of Word (native) file

Table of Contents

Page

1.0 PURPOSE 3
- 1.1 Purpose 3
- 1.2 Scope 3

2.0 INFORMATION 3

3.0 PRECAUTIONS AND LIMITATIONS 4
- 3.1 Personnel Safety 4
- 3.2 Radiation and Contamination Control 4

4.0 PREREQUISITES 5
- 4.1 Special Tools, Equipment, and Supplies 5
- 4.2 Performance Documents 5
- 4.3 Field Preparation 5

5.0 PROCEDURE 6
- 5.1 Disabling Interlocks and Alarms for AN and AW B-Train Primary Exhausters Systems only 6
- 5.2 Transmitter Test 7
- 5.3 BT-200 Transmitter Range Change 8
- 5.4 Calibrate Transmitter using BT-200 9
- 5.5 Calibrate Transmitter using HART Communicator 11

5.6 Integral Indicator Range Setup 14
5.7 Restoration 15
5.8 Acceptance Criteria 15
5.9 Review 15
5.10 Records 16

Figure 1 - Communication Connection 17

Figure 2 - Instrument Connection 18

Attachment 1 - Manipulation of interlocks and Alarms on RTP/Citect HMI 19

Attachment 2 - Force RTP VFD running Bit for non-running Train to verify value for Stack Flow on HMI 21

Attachment 3 - Manipulation of interlocks ABB HMI 23

1.0 PURPOSE

1.1 Purpose

This procedure provides instructions for calibrating (non-Foundation Fieldbus) Yokogawa Instruments EJA110 and EJA120 Differential Pressure Transmitters.

1.2 Scope

This procedure applies to Yokogawa Instruments EJA110 and EJA120 Differential Pressure Transmitters and associated test equipment necessary for calibration.

2.0 INFORMATION

NONE

3.0 PRECAUTIONS AND LIMITATIONS

3.1 Personnel Safety

3.1.1 Most units can be isolated without entering a Limited Approach Boundary by removing fuses, disconnecting low-voltage wires, or unplugging power cords.

If entry into a Limited Approach Boundary is required, shock hazard and/or arc flash hazard must be mitigated. Work Package will contain requirements for Lock and Tag, Voltage-rated gloves, or Voltage-rated barrier.

3.2 Radiation and Contamination Control

3.2.1 Work in radiological areas will be performed using a Radiological Work Permit following review by Radiological Control per the ALARA Work Planning procedure TFC-ESHQ-RP_RWP-C-03.

3.2.2 When disconnecting, breaching, or opening systems or system components that are currently or previously connected to waste tanks or waste transfer systems;

- Continuous HPT coverage is required
- Pre-job and post-job surveys are required
- Installer verify integrity of sleeving or containment prior to installation.
- When breaching containment, a damp rag as a minimum will be used to contain the breach until radiological verifications have been performed.

4.0 PREREQUISITES

4.1 Special Tools, Equipment, and Supplies

The following supplies may be needed to perform this procedure:

- Digital Multimeter (DMM)
- Variable pressure source (as required per Data Sheet)
- Digital Manometer (or equivalent)
- DC power supply (as required per Data Sheet)
- Yokogawa BT-200 interface unit, or HART Communicator
- Other tools, equipment, and supplies as identified by Shift Manager/OE/FWS/User.

4.2 Performance Documents

4.2.1 **IF** entry into a Limited Approach Boundary may be required during the performance of this procedure, **ENSURE** Work Package contains requirements for Lock and Tag, Voltage-rated gloves, or Voltage-rated barrier.

4.3 Field Preparation

4.3.1 **IF** instrument is being field calibrated (in the loop), **OBTAIN** responsible Shift Manager/OE permission per Work Package, to perform this procedure.

4.3.2 **IF** instrument is being field calibrated (in the loop), **ENSURE** Operations has configured system to allow calibration.

4.3.3 **IF** instrument is being field calibrated at the 242-A Evaporator, 702AZ, or at POR107, **PERFORM** the following:

4.3.3.1 **ENSURE** system has been configured to allow for calibration.

4.3.3.2 **GO TO** Section 5.2.

5.0 PROCEDURE

NOTE - Sections may be performed as required, or at discretion of FLM.

- For specific instructions on manipulating RTP/Citect alarms and interlocks, see Attachment 1.
- For specific instructions on forcing RTP VFD Running Bit, see Attachment 2.
- For specific instructions on manipulating ABB alarms and interlocks, see Attachment 3.

5.1 Disabling Interlocks and Alarms for AN and AW B-Train Primary Exhausters Systems only

5.1.1 **LOG IN** at the exhauster HMI on the engineering access level.

NOTE - If A-Train is running, Tank Pressure alarms/interlocks for A-Train must be disabled/bypassed. If B-Train is running, Tank Pressure alarms/interlocks for B-Train must be disabled/bypassed.

5.1.2 **ENSURE** alarms and interlocks for train currently running are disabled/bypassed before proceeding (see Attachment 1 for RTP/Citect control system and Attachment 3 for ABB control system).

5.1.3 **IF** performing Stack Flow Calibration on RPT/Citect systems, **FORCE** Bits per Attachment 2.

5.2 Transmitter Test

5.2.1 **VALVE-OUT** instrument to be calibrated.

5.2.2 **IF** shop testing transmitter, **GO TO** step 5.2.3; otherwise **GO TO** step 5.2.4.

NOTE - If shop testing transmitter, it may be necessary to install a 250-ohm resister to enable communication with test equipment. See Figure 1.

5.2.3 **INSTALL** 250-ohm resister as shown in Figure 1 **AND**

GO TO step 5.2.4.

5.2.4 **CONNECT** test equipment as shown (Figure 1 and Figure 2).

5.2.5 **SLOWLY APPLY** input per data sheet **AND**

RECORD as-found output values.

5.2.6 **IF** required per Data Sheet for instrument being checked, **RECORD** indicator values from integral indicator in as-found column of data sheet.

5.2.7 **IF** as-found readings are not within tolerance, **GO TO** appropriate section(s) for calibration as per table.

Go To Section	Transmitter
5.3	BT-200 Transmitter Range Change
5.4	Calibrate Transmitter Using BT-200
5.5	Calibrate Transmitter using HART Communicator
5.6	BT-200 Integral Indicator Range Setup

5.2.8 **RECORD** as-found indication in as-left column of data sheet.

5.2.9 **GO TO** Section 5.7.

5.3 BT-200 Transmitter Range Change

5.3.1 **SWITCH** BT-200 to ON.

5.3.2 **PRESS** ENTER until MENU screen appears, A:DISPLAY should be highlighted.

5.3.3 **PRESS** F2 key, C:SETTING should be highlighted.

5.3.4 **PRESS** ENTER key.

5.3.5 **ARROW DOWN** to C21:LOW RANGE.

5.3.6 **ENSURE** low range value is per data sheet; **OTHERWISE, ENTER** value to match data sheet.

5.3.7 **ARROW DOWN** to C22:HIGH RANGE.

5.3.8 **ENSURE** high range value is per data sheet; **OTHERWISE, ENTER** value to match data sheet.

5.3.9 **PRESS** ESC key.

5.3.10 **GO TO** Step 5.4.2.

5.4 Calibrate Transmitter using BT-200

NOTE - The BT-200 response time is slow when pressing input keys and the unit will not function properly if sufficient time is not allowed for the screen to stop changing between each input.

5.4.1 **TOGGLE** BT-200 POWER SWITCH to ON.

5.4.2 **PRESS** ENTER until MENU screen appears **AND**

PRESS F3 key; J: ADJUST is high-lighted.

5.4.3 **PRESS** ENTER 2 twice: + 000.0 is high-lighted.

5.4.4 **CHANGE** value to + 000.0 if not already at this value.

5.4.5 **PRESS** ENTER twice **AND**

PRESS F4 key.

5.4.6 **PRESS** ESC key until back to main MENU.

5.4.7 **APPLY** input per Data Sheet **AND**

CHECK output values for tolerance.

5.4.8 **IF** values are within tolerance per Data Sheet, **RECORD** As-Left values on Data Sheet **AND**

GO TO Restoration, Section 5.7.

5.4.9 **IF** values are not within tolerance per Data Sheet, **REPEAT** Steps 5.4.2 through 5.4.8 until values are within tolerance

OR

IF necessary, **GO TO** appropriate section for additional adjustments.

5.4.10 **IF** unable to bring values into tolerance, **AND** replacement/repair parts are required, **PERFORM** the following:

5.4.10.1 **NOTIFY** FWS of pending equipment replacement/repair.

5.4.10.2 FWS **NOTIFY** Shift Manager and contact planning for BOM.

5.4 Calibrate Transmitter using BT-200 (Cont.)

5.4.10.3 **REQUEST** Planning to print new Data Sheet(s).

5.4.10.4 **ENSURE** controls to mitigate shock/arc flash hazard are implemented.

5.4.10.5 **REPAIR/REPLACE** Instrument **AND**

PERFORM Section 5.4.

5.5 Calibrate Transmitter using HART Communicator

5.5.1 **ENSURE** HART Communicator is **TURNED** ON **AND**

WAIT for unit to perform self-test.

5.5.2 **FOLLOW** on-line instructions for entering tag numbers:

- On Line
- Device Setup
- Basic Setup
- Tag.

5.5.3 **FOLLOW** on-line instructions for re-range transmitter:

- On Line
- Device Setup
- LRV
- URV
- Send,

OR

- On Line
- Device Setup
- Basic Setup
- Re-range
- Key Pad
- Send.

5.5 Calibrate Transmitter using HART Communicator (Cont.)

5.5.4 **CHECK** transmitter cell range by scrolling through following menus **AND**

FOLLOW on-line instructions for adjusting values in Sensor Trim menu:

- On Line
- Device Setup
- Diag/Service
- Calibrate
- Sensor Trim
- Zero Trim
- Lower Trim
- Sensor Trim.

5.5.5 **CHECK** transmitter D/A output values by scrolling through the following menus **AND**

FOLLOW on-line instructions for adjusting values in D/A Trim menu:

- On Line
- Device Setup
- Diag/Service
- Calibrate
- Trim Analog Output
- D/A Trim.

5.5.6 **APPLY** input per Data Sheet **AND**

CHECK output values for tolerance.

5.5.7 **IF** values are within tolerance per Data Sheet, **RECORD** As-Left values on Data Sheet **AND**

GO TO Restoration, Section 5.7.

OR

GO TO appropriate section for additional adjustments

5.5 Calibrate Transmitter using HART Communicator (Cont.)

5.5.8 **IF** unable to bring values into tolerance **AND** replacement/repair parts are required, **PERFORM** the following:

5.5.8.1 **NOTIFY** FWS of pending equipment replacement/repair.

5.5.8.2 FWS **NOTIFY** Shift Manager and contact planning for BOM.

5.5.8.3 **REQUEST** Planning to print new Data Sheet(s).

5.5.8.4 **ENSURE** controls to mitigate shock/arc flash hazard are implemented.

5.5.8.5 **REPAIR/REPLACE** Instrument **AND**

PERFORM Section 5.5.

5.6 Integral Indicator Range Setup

5.6.1 **TOGGLE** BT-200 power switch to ON.

5.6.2 **PRESS** ENTER until menu screen appears.

5.6.3 **PRESS** F2 key **AND**

SCROLL DOWN to D:AuxSet1.

5.6.4 **PRESS** ENTER **AND**

SCROLL DOWN to D22:DISP LRV.

5.6.5 **PRESS** ENTER **AND**

KEY IN the low range indicator value from data sheet.

5.6.6 **PRESS** ENTER twice.

5.6.7 **PRESS** F4 key.

5.6.8 **SCROLL** down to D23:DISP HRV.

5.6.9 **PRESS** ENTER **AND**

KEY IN the high range indicator value from data sheet.

5.6.10 **PRESS** ENTER twice.

5.6.11 **PRESS** F4 key.

5.6.12 **APPLY** input per data sheet **AND**

RECORD indicator readings in as-left column of data sheet.

5.6.13 **IF** necessary, **GO TO** appropriate section for additional adjustments

OR

GO TO Restoration, Section 5.7.

5.7 Restoration

5.7.1 **IF** any problems were encountered with calibration, **INFORM** FWS.

5.7.2 **ENSURE** test equipment is disconnected and removed and terminal backs are resealed.

5.7.3 **IF** instrument was field calibrated (in the loop), **RECONNECT** field wiring.

5.7.4 **VALVE-IN AND RETURN** instrument to service.

5.7.5 **ENSURE** alarms and interlocks disabled/bypassed in Section 5.1 are returned to service.

5.7.6 **ENSURE** bits forced in Section 5.1 are unforced.

5.7.7 **ENSURE** equipment system restoration by observing indications are consistent with expected conditions.

5.7.8 **NOTIFY** Operations that testing is complete and system may be returned to desired configuration.

5.8 Acceptance Criteria

Acceptance Criteria has been met when Steps in this procedure have been satisfactorily performed and As-Left values meet the specifications and tolerance(s) per the Data Sheet.

5.9 Review

5.9.1 **INFORM** FWS test is complete.

5.9.2 FWS **REVIEW AND ENSURE** the following.

- Completed Data Sheets meet the acceptance criteria.
- Comments sections are filled out appropriately.
- Work requests needed as a result of this procedure are identified and generated.
- Work request number(s) of any work documents generated as a result of this procedure, are recorded in the Comments/Remarks section of the Data Sheet.

5.10 Records

NOTE - The performance of this procedure generates no records. However, PMIDs associated with the procedure, identified by CHAMPS for the activity, are record material and are maintained in the CHAMPS work package as record material.

- The identified record custodian is responsible for record management in accordance with TFC-BSM-IRM_DC-C-02 or other applicable requirements.

Figure 1 - Communication Connection

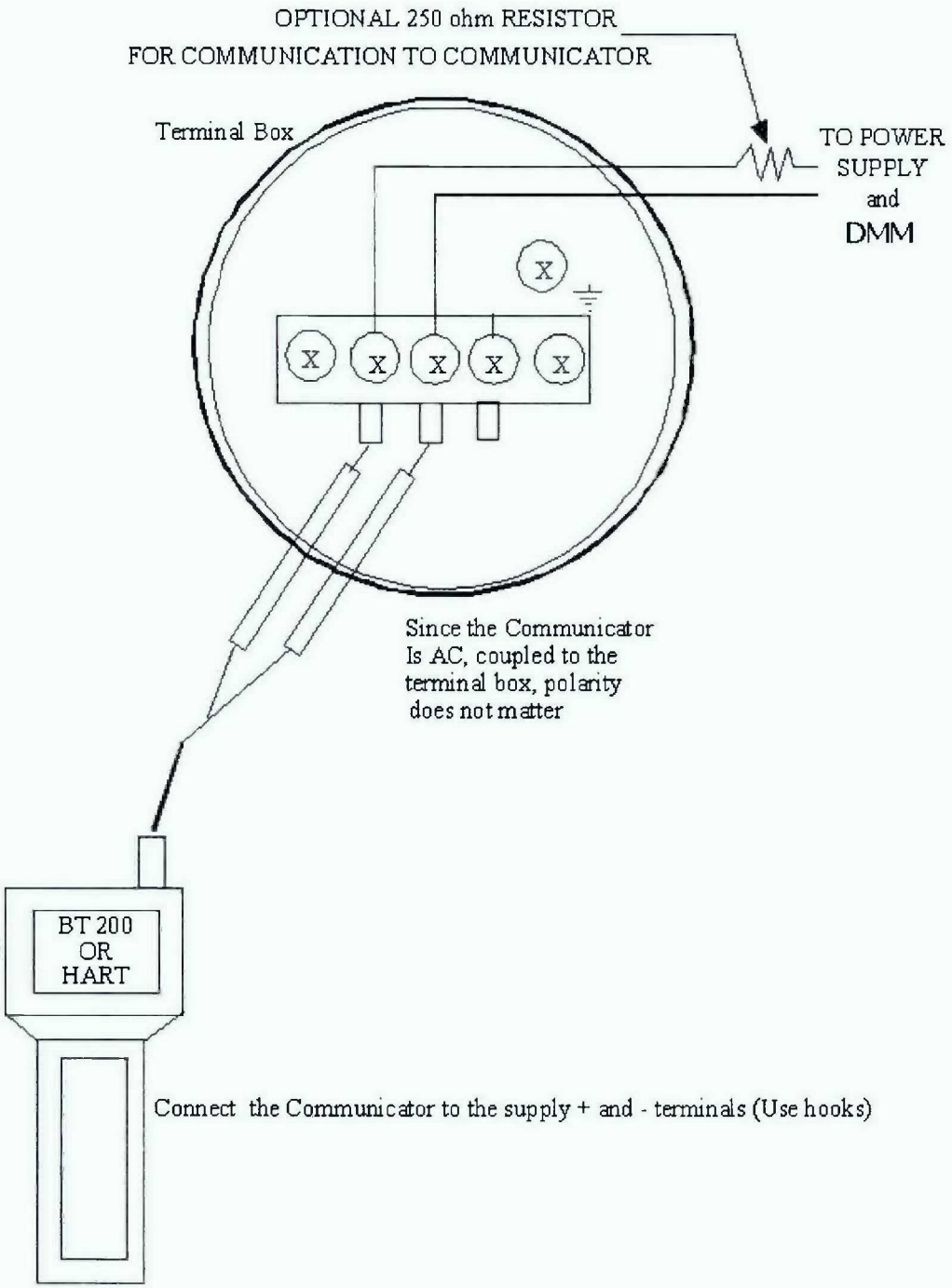

Figure 2 - Instrument Connection

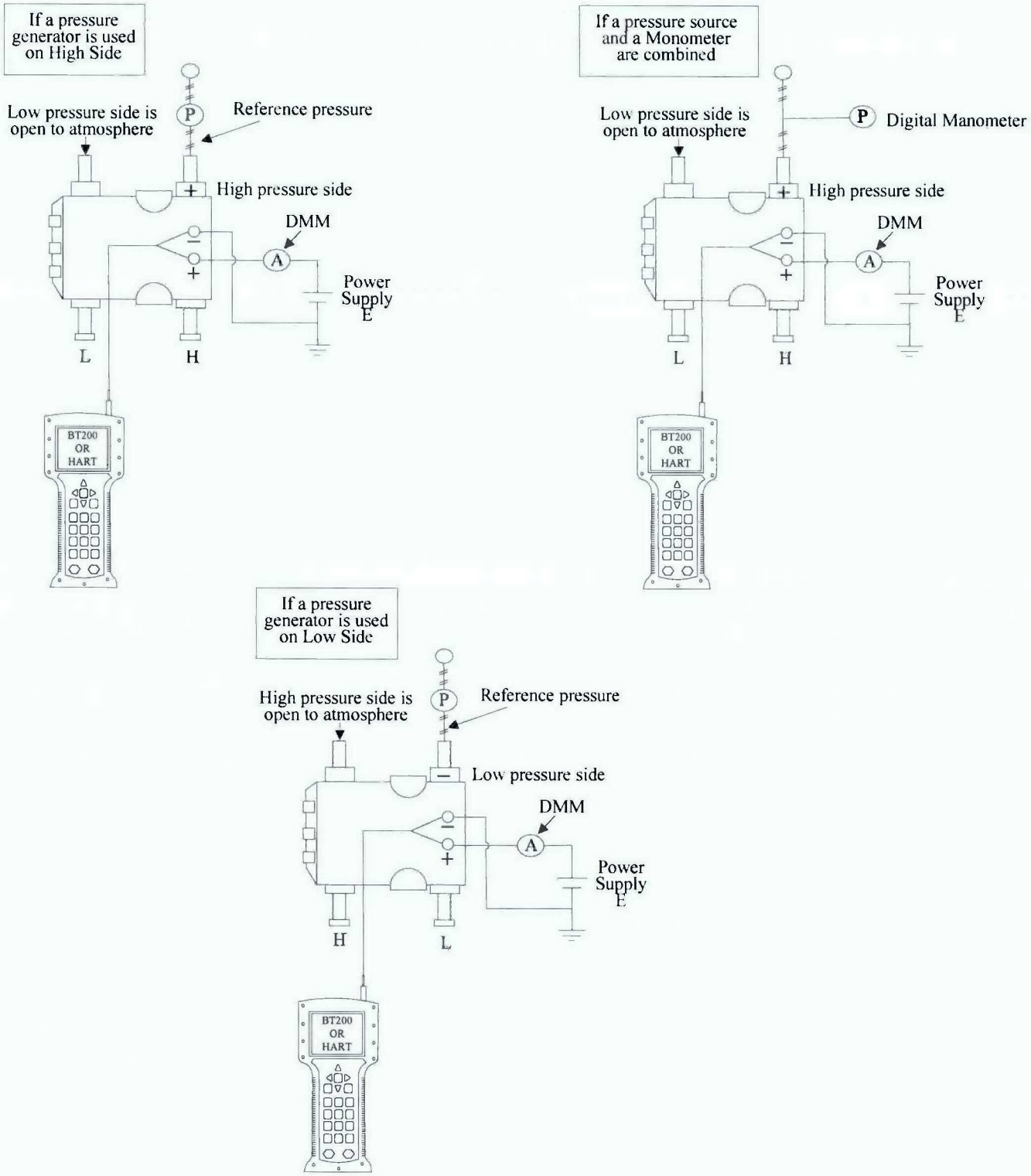

Attachment 1 - Manipulation of interlocks and Alarms on RTP/Citect HMI

NOTE - Engineering access level is required to manipulate alarms or interlocks associated with specific devices.

1.) **SELECT** Admin from HMI.

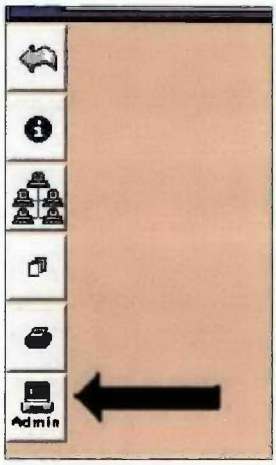

2.) **SELECT** Exhauster Equipment Status.

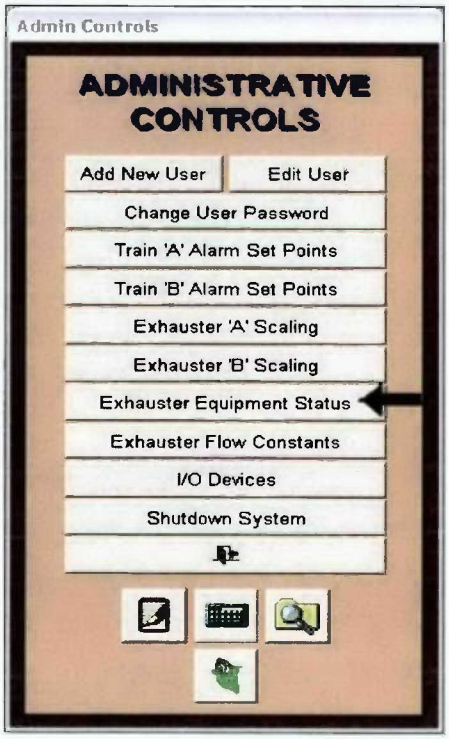

Attachment 1 - Manipulation of interlocks and Alarms on RTP/Citect HMI (Cont.)

3.) **SELECT** appropriate column of currently running exhaust train, and then location of transmitter that requires interlock manipulation.

(Tanks 101-106 for tank pressure transmitters)

(De-Entrainer for de-entrainer pressure transmitters)

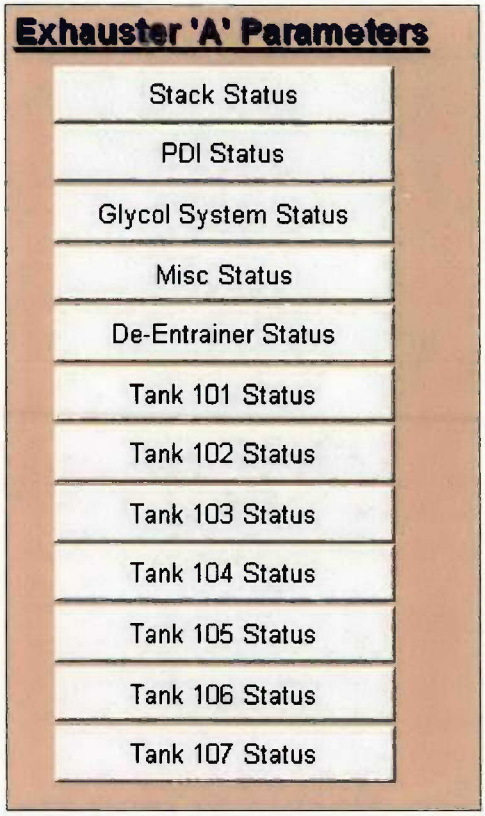

4.) **SELECT** Intlk Active to bypass interlock or Intlk Bypassed to enable interlock

OR

SELECT Alarms Enabled to disable alarms or Alarms Disabled to enable alarms.

Attachment 2 - Force RTP VFD running Bit for non-running Train to verify value for Stack Flow on HMI.

1. **SELECT** Admin from HMI.
2. **SELECT** systems Applications.
3. **SELECT** NetArrays ICON.
4. **OPEN** latest version of the NetArrays PLC software for PLC associated with PDIT (refer to Table below).

Identification	Node Name	PDIT (EIN)	VFD Running Bit	Fan Status
AN241-VTP-YYC-350	HVAC_ANA	AN241-VTP-PDIT-551	AN_YL_009_V	AN_HVA_FAN_STAT
AN241-VTP-YYC-450	HVAC_ANB	AN241-VTP-PDIT-651	AN_YL_010_V	AN_HVB_FAN_STAT
AW241-VTP-YYC-450	HVAC_AWB	AW241-VTP-PDIT-6512	AW_YL_010_V	AW_HVB_FAN_STAT

5. **SELECT** "Device" - "Select" - Select Specific Device (listed in Node Name column for the PLC to be loaded).
6. **SELECT** "File" (from the main menu bar) - "Open Project" - file name (same as Device for the PLC to be loaded and most current version). (Path is P:\Prod\RTP NetArrays\HVAC V-.-).
7. **SELECT** "Debug" (on the main menu bar) - "Run HVAC V-.-" (on the drop down list).
8. **ENTER** the password into the download password popup window.
9. **OPEN** "HI FLOW" module.
10. **FORCE** Fan Status Bit (identified in table) to "False".
11. **FORCE** VFD Running Bit (**identified** in Table) to "True".

Attachment 2 - Force RTP VFD running Bit for non-running Train to verify value for Stack Flow on HMI. (Cont.)

When complete with verification of the Stack Flow on the HMI, perform the following steps:

12. **UNFORCE** VFD Running Bit.

13. **UNFORCE** Fan Status Bit.

14. **SELECT** "Debug" (on the main menu bar) - "End HVAC V-.-" (on the drop down list).

15. **CLOSE** NetArrays program.

Attachment 3 - Manipulation of interlocks ABB HMI

NOTE - Engineering access level is required to manipulate alarms or interlocks associated with specific devices.

1.) **OPEN** Fan Faceplate (e.g., EF-009).

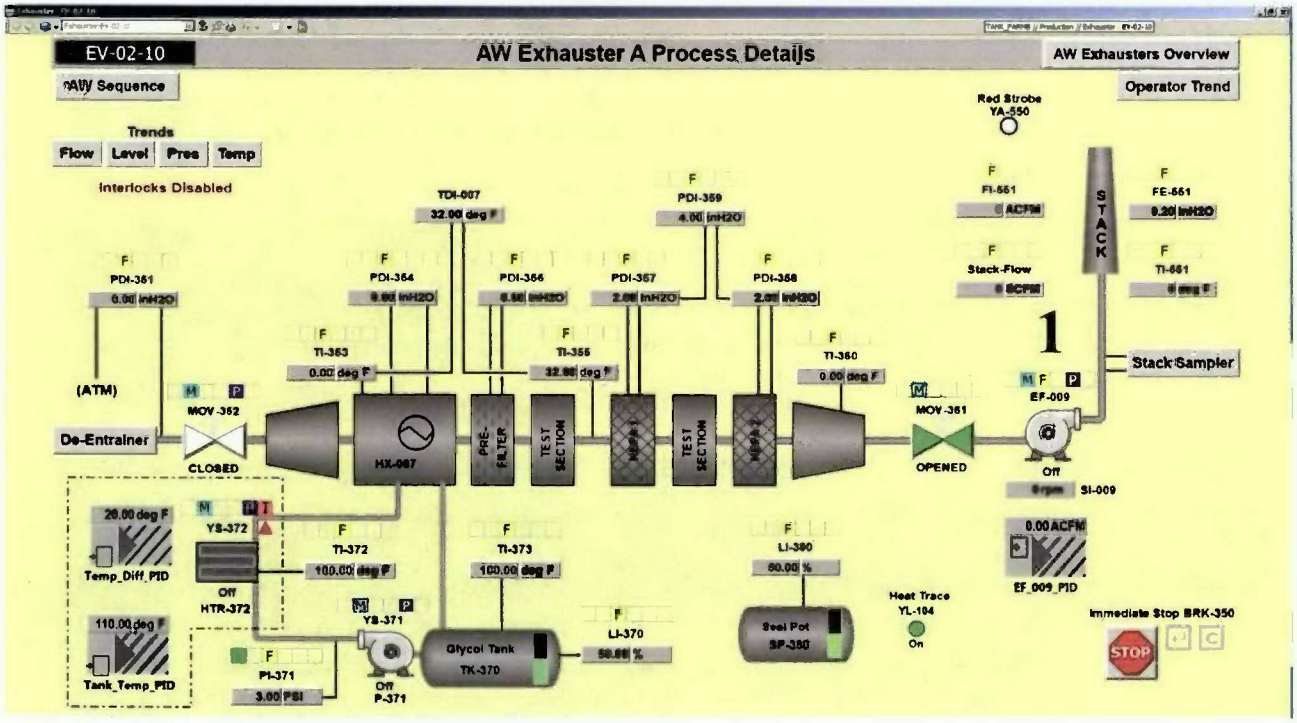

Attachment 3 - Manipulation of interlocks ABB HMI

2.) **SELECT** PCmd/Ilock tab.
3.) **SELECT** Inhibit PriorityCmd and Interlock.

3

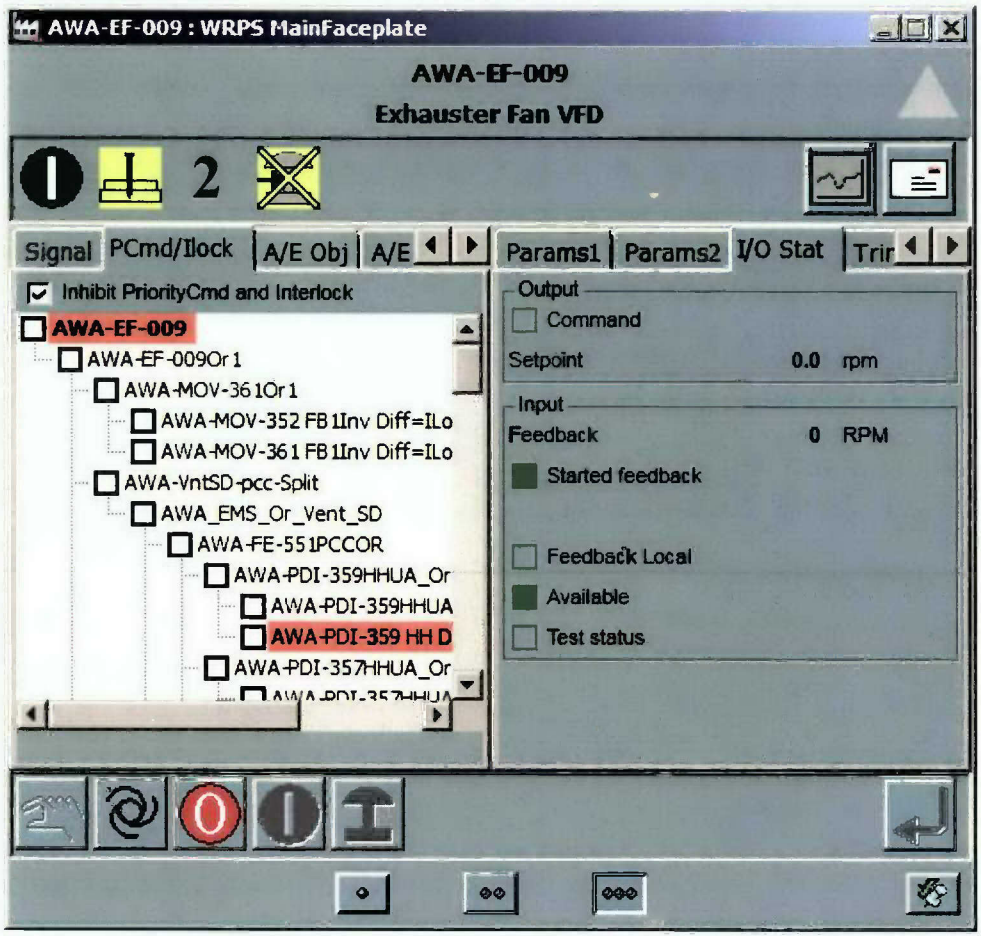

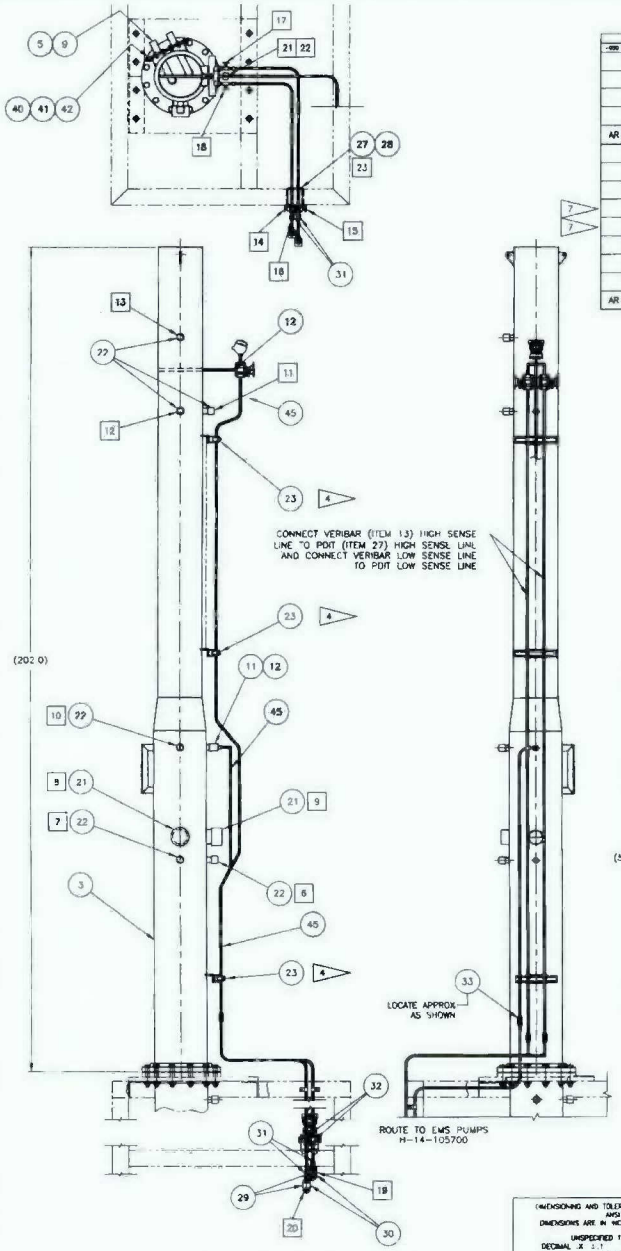

1 UPPER STACK ASSEMBLY
SCALE: 1" = 1'-0"

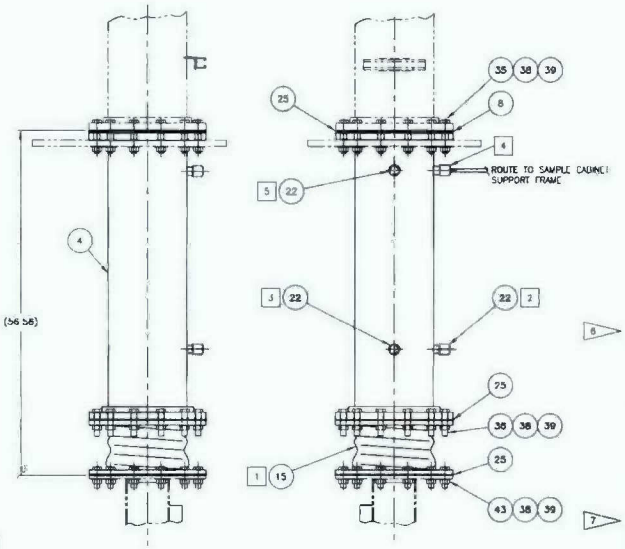

2 LOWER STACK ASSEMBLY
SCALE: 1/8

QTY -050	QTY -040	QTY -030	QTY -020	QTY -010	PARTS / DCN NUMBER	NOMENCLATURE/DESCRIPTION	MATERIAL/REFERENCE	SHEET	ITEM NO
				18		HEX BOLT, 3/8-16 UNC-2A X 1" LONG	ASTM A193 GR B8		40
				16		HEX NUT, 3/8-16 UNC-2B	ASTM A194 GR 8F		41
				16		PLAIN WASHER, 3/8, (SERIES AND TYPE OPTIONAL)	18-8 SST		42
			12			HEX BOLT, HVY, 7/8-9 UNC-2A 3 LONG	ASTM A193 GR B8		43
AR						TUBE, 1 1/2 OD X .065 WALL, SMLS	ASTM A269 TYPE 304L		44
				AR		TUBE, 1/2 OD X .049 WALL, SMLS	ASTM A269 TYPE 304L		45
	AR	AR				PIPE, 12" SCHED 40S	ASTM A312 GR TP 304L		46
		AR				PIPE, 10" SCHED 40S	ASTM A312 GR TP 304L		47
		2				PIPE, 3" SCHED 40S X 2.0 LONG TOE	ASTM A312 GR TP 304L		48
	4	7				PIPE, 1" SCHED 40S X 2.0 LONG TOE	ASTM A312 GR TP 304L		49
		AR				PLATE, 1/2 THK	ASTM A240 TYPE 304L		50
		AR				ANGLE, 2 1/2 X 1 1/2 X 1/4 THK	ASTM A276 TYPE 304L		51
		3				ANGLE, 2 X 2 X 1/4 THK X 5.0 L	ASTM A276 TYPE 304L		52
AR						PLATE, 11 GA	ASTM A240 TYPE 304L		53

X = EQUIP IDENT NO. (SEE NOTE 5)	
1	AW241-VTP-EJ-651
2	AW241-VTP-FTP-651
3	AW241-VTP-FTP-652
4	AW241 VTP FTP 653
5	AW241-VTP-FTP-682
6	AW241-VTP-FTP-683
7	AW241-VTP-FTP-654
8	AW241-VTP-FTP-656
9	AW241-VTP-TIP-657
10	AW241-VTP-TIP-658
11	AW241 VTP FTP 659
12	AW241-VTP-FTP-660
13	AW241-VTP-FTP-681
14	AW241-VTP-V-680
15	AW241-VTP-V-681
16	AW241-VTP-V-682
17	AW241-VTP-V-683
18	AW241-VTP-V-684
19	AW241-VTP-V-686
20	AW241-VTP-V-685
21	AW241-VTP-TE-651
22	AW241-VTP-FE-651
23	AW241-VTP-PDIT-651

PARTS LIST/MATERIAL LIST

QTY -050	QTY -040	QTY -030	QTY -020	QTY -010	PARTS / DCN NUMBER	NOMENCLATURE/DESCRIPTION	MATERIAL/REFERENCE	SHEET	ITEM NO
					-010	UPPER STACK ASSEMBLY		1	1
					-020	LOWER STACK ASSEMBLY		1	2
				1	-030	UPPER STACK WELDMENT		2	3
			1		-040	LOWER STACK WELDMENT		3	4
				1	-050	PROBE WELDMENT		3	5
									6
									7
			1		-001	FLANGE, PLATE, 7 GA OR 3/16 THK	ASTM A240 TYPE 304L	3	8
				1	-002	GASKET, 1/4" THK 40-45 DURO	NEOPRENE ASTM D2000	2	9
									10
				1		REDUCER, 1" X 1/2" NPT CLASS 3000	ASTM A182 GR F 304L		11
				3	SS-810-1-8	MALE CONNECTOR, 1/2" TUBE X 1/2" NPT	SWAGELOK		12
		1			V100-10"SCH40S-10 V D WNS C20C	VERABAR FLOW SENSOR WITH INTEGRAL RTD	VERIS, INC		13
									14
			1		SEE NOTE 10	12" NOM BY 9" OAL EXPANSION JOINT	HYSPAN		15
	2	1				PIPE FLANGE, SLIP-ON, 12" CLASS 150, FF	ASTM A182 GR F 304L		16
									17
									18
		1				PIPE, REDUCER, 12-10 CLASS 150, BW	ASTM A403 WP 304L		19
									20
				2		CAP, 3" NPT, CLASS 3000	ASTM A182 GR F 304L		21
			4	6		CAP, 1" NPT, CLASS 3000	ASTM A182 GR F 304L		22
				6	P2026	TUBING CLAMPS	UNISTRUT		23
		3			P1000	CHANNEL, 1 5/8" X 1 5/8" X 10.0 L	UNISTRUT		24
			4			GASKET, 12" 150#, FULL FACE 1/8" STYLE 3000	GARLOCK		25
2					J5-712-1'1	SHROUDED SAMPLE PROBE TIP, 20FM	THERMO ANDERSON		26
				1	EJA120A-EES4B-92EC/FS1-D1-HAC-F1	DIFFERENTIAL PRESSURE SMART TRANSMITTER, DP HART, 4-20mA	YOKOGAWA		27
				1	GP3TC-T-LSS-MB	VALVE, 3-WAY MANIFOLD	D/A MFG CO		28
				2	SS-63TFB	3-PIECE BALL VALVE, 1/2 FNPT	SWAGELOK		29
				2	SS-8-P	PIPE PLUG, 1/2 MNPT	SWAGELOK		30
				4	SS-810-11-8	BULKHEAD MALE CONNECTOR	SWAGELOK		31
				2	SS-810-3	UNION TEE, 1/2	SWAGELOK		32
				3	SS-810-6	UNION, 1/2	SWAGELOK		33
									34
			12			HEX BOLT, HVY, 7/8-9 UNC-2A 5-1/2 LONG	ASTM A193 GR B8		35
			12			HEX BOLT, HVY, 7/8-9 UNC-2A 4 LONG	ASTM A193 GR B8		36
									37
			36			HEX NUT, HVY, 7/8-9 UNC-2B	ASTM A194 GR 8F		38
			36			LOCK WASHER, 7/8, (SERIES AND TYPE OPTIONAL)	18-8 SST		39

GENERAL NOTES:

1. FABRICATION AND WELDING SHALL BE IN ACCORDANCE WITH THIS DRAWING AND SPECIFICATION PTI-W314-TS-001.
2. ABBREVIATIONS ARE IN ACCORDANCE WITH ANSI Y1.1.
3. REMOVE ALL BURRS AND BREAK ALL SHARP EDGES.
4. SPACE THE TUBING CLAMPS (ITEM 23) AS NECESSARY TO FIT TUBING (ITEM 45).
5. NAME TAGS DENOTING EQUIPMENT IDENTIFICATION NUMBERS WILL BE PROVIDED BY CUSTOMER TAGS SHALL BE LOCATED ON THE IDENTIFIED ASSEMBLY COMPONENTS IN LOCATIONS THAT ARE CLEARLY VISIBLE AFTER FINAL ASSEMBLY.
6. FOR SAMPLE TUBING RUNS (FROM PROBES TO CAM AND RECORD SAMPLER):
   - THERE SHALL BE NO INWARD FACING STEPS AT THE TUBING CONNECTIONS THAT CAUSE MORE THAN A 1% REDUCTION IN TUBE DIAMETER.
   - THE TUBING ENDS SHALL BE FREE OF BURRS AND CRIMPING.
   - BENDS SHALL HAVE A CURVATURE RATIO (RADIUS OF CURVATURE OF THE BEND DIVIDED BY THE TUBE DIAMETER) OF AT LEAST 3.0.
   - FLATTENING OF THE BEND CAUSED BY A BENDING PROCESS SHALL NOT EXCEED 1.5%, WHERE FLATTENING IS DEFINED IN TERMS OF THE ORIGINAL AND MINOR AXES OF THE TUBE CROSS SECTION AT THE ANGULAR MIDPOINT OF THE BEND.

   SPECIAL FABRICATION TECHNIQUES MAY BE REQUIRED TO MEET THESE SPECIFICATIONS (ANSI/HPS N13.1-1999).
7. ITEMS 48 AND 49 MAY BE PURCHASED AS PIPE NIPPLES PER ASTM A733 GR TP 304L AND INWARD TO LENGTH AS SPECIFIED. THREADED PORTION ON ONE END OF PIPE NIPPLES MUST BE COMPLETELY REMOVED.
8. UNISTRUT MAY BE TYPE HG (HOT DIPPED GALVANIZED), PG (PRE-GALVANIZED), OR EG (ELECTRO-GALVANIZED). APPEND TO THE END OF UNISTRUT PART NUMBERS AS REQUIRED.
9. 7/8 HEX BOLTS (ITEMS 35, 36, & 43) MAY BE REPLACED WITH THREADED ROD, 7/8-9 UNC-2A LENGTH AS REQD, ASTM A193 GR B8 OR GR B8M WITH ADDITIONAL HEX NUTS AND LOCK WASHERS IF REQD TO ACCOMMODATE SPACE RESTRAINTS.
10. EXPANSION JOINT MAY BE EITHER PART NUMBER 2509/10X-080-7.0 OR 57194.
11. REVISION 3 OF THIS DRAWING WAS FIELD WALKED DOWN IN MAY 2010 FOR CHANGES MADE AND FOR ITEMS NOT VERIFIED IN FIELD. SEE ECN-10-000310.

DIMENSIONING AND TOLERANCING SHALL BE INTERPRETED PER ANSI Y14.5M-1994
DIMENSIONS ARE IN INCHES UNLESS OTHERWISE SPECIFIED
UNSPECIFIED TOLERANCES SHALL BE:
DECIMAL .X ± .1 .XX ± .06 .XXX ± .030
ANGULAR ± 1°
ALL IMPLIED 90° ANGLES SHALL BE PERPENDICULAR WITHIN THE GREATEST TOLERANCE OF THE LINEAR DIMENSIONS
ALL COAXIAL FEATURES SHALL BE CONCENTRIC WITHIN .031 INCH UNLESS OTHERWISE SPECIFIED

DWG NO	TITLE
H-14-105676	AW241 EXH TRAIN A & B DWG INDEX
REF NUMBER	TITLE
REFERENCES	
NEXT USED ON H-14-105693	

DRAWING TRACEABILITY LIST

REV	DESCRIPTION	CHKD	DATE
4	DIRECT REC PER ECN-10-000310		

REVISIONS

NAME — SEE REVISION 0

U.S. DEPARTMENT OF ENERGY
Office of River Protection

AW241-VTP (W-314)
EXHAUSTER TRAIN "B" UPPER & LOWER STACK ASSEMBLIES

SIZE	DRAWN BY	CHKD BY	DWG NO	REV
F	241AW	BIGGS	H-14-105695	4

SCALE NONE | DATE 8/20/36 | SHEET 1 OF 3

H-14-105695 REV 4

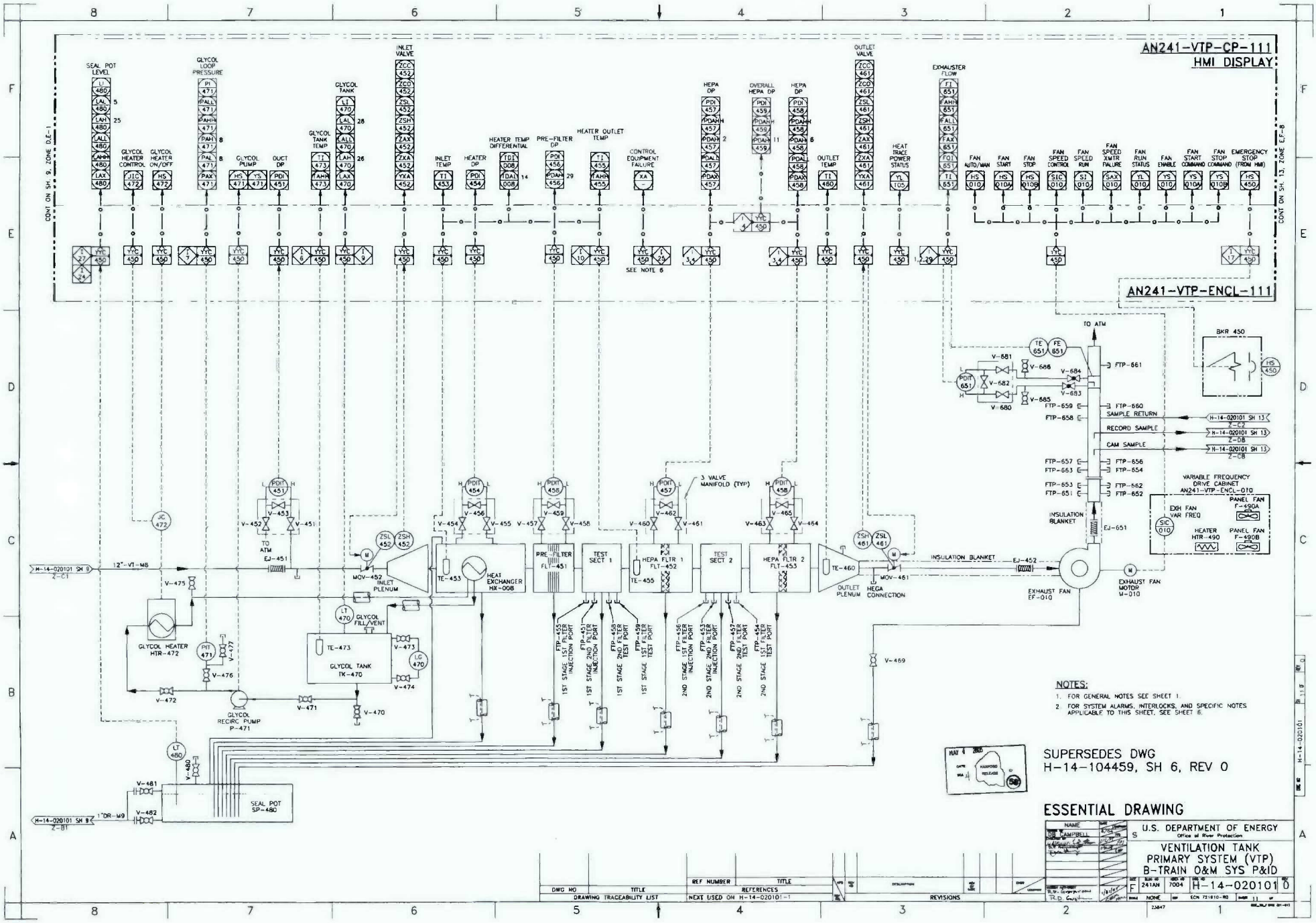

NOTES:

1. FOR GENERAL NOTES SEE SHEET 1.
2. FOR SYSTEM ALARMS, INTERLOCKS, AND SPECIFIC NOTES APPLICABLE TO THIS SHEET, SEE SHEET 6.

SUPERSEDES DWG
H-14-104459, SH 6, REV 0

ESSENTIAL DRAWING

DWG NO	TITLE	REF NUMBER	TITLE
DRAWING TRACEABILITY LIST		REFERENCES	
		NEXT USED ON H-14-020101-1	

REVISIONS

U.S. DEPARTMENT OF ENERGY
Office of River Protection

VENTILATION TANK
PRIMARY SYSTEM (VTP)
B-TRAIN O&M SYS P&ID

F 241AN 7004 H-14-020101 0

NONE

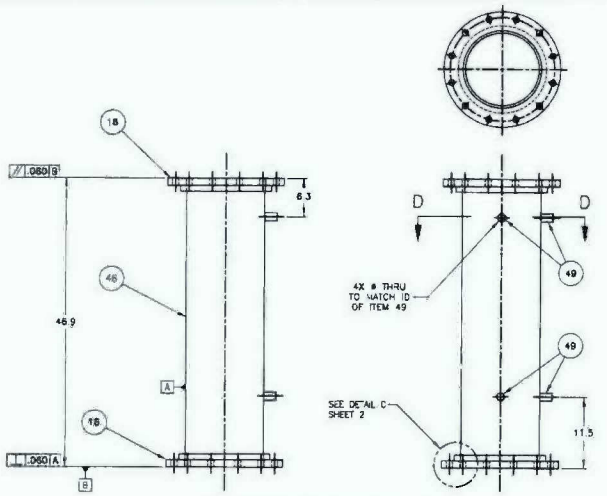

4 LOWER STACK WELDMENT
SCALE: 1/8

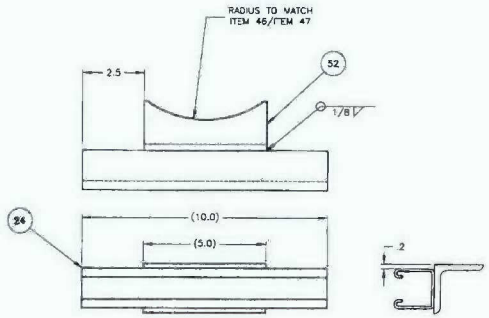

DETAIL G
SCALE: 1/2
(3 REQD)

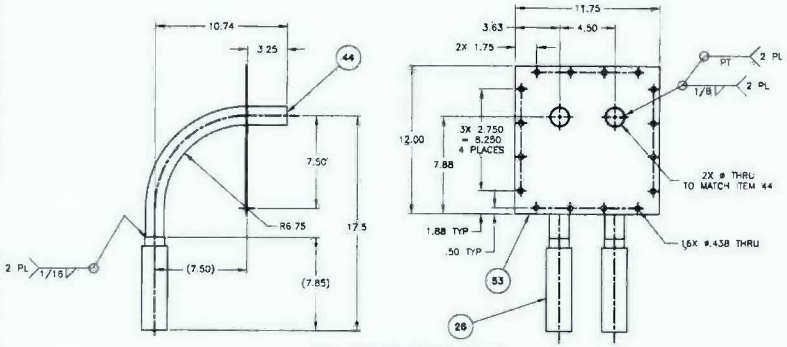

5 PROBE WELDMENT
SCALE: 1/4

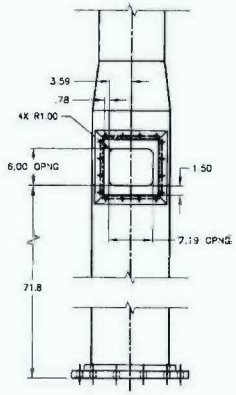

VIEW H-H
SCALE: 1/8
FROM SHEET 2

NOTES:

1. FOR PARTS LIST AND GENERAL NOTES SEE SHEET 1
2. REVISION 2 OF THIS DRAWING WAS FIELD WALKED DOWN IN MAY 2010. FOR CHANGES MADE AND FOR ITEMS NOT VERIFIED IN FIELD, SEE ECN-727673-R0.

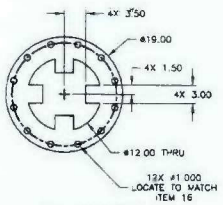

8 FLANGE
SCALE: 1/8

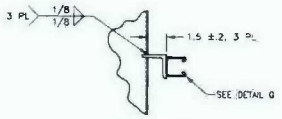

DETAIL F
SCALE: 1/4
FROM SHEET 2

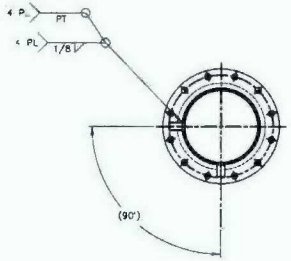

SECTION D-D
SCALE: 1/8

DIMENSIONING AND TOLERANCING SHALL BE INTERPRETED PER ANSI Y14.5M-1994
DIMENSIONS ARE IN INCHES UNLESS OTHERWISE SPECIFIED
UNSPECIFIED TOLERANCES SHALL BE:
DECIMAL .X ±.1 .XX ±.08 .XXX ±.030
ANGULAR ±1°
ALL IMPLIED 90° ANGLES SHALL BE PERPENDICULAR WITHIN THE GREATEST TOLERANCE OF THE LINEAR DIMENSIONS
ALL COAXIAL FEATURES SHALL BE CONCENTRIC WITHIN .031 INCH UNLESS OTHERWISE SPECIFIED

DWG NO	TITLE
DRAWING TRACEABILITY LIST	

REF NUMBER	TITLE
REFERENCES	
NEXT USED ON SHEET 1	

2B	3	DIRECT REV PER ECN-727673-R0		
REVISIONS				

NAME	
DRAWN BY	
CHECKED BY	
SEE REVISION 0	

U.S. DEPARTMENT OF ENERGY
Office of River Protection

AW241-VTP (W-314)
EXHAUSTER TRAIN "B"
UPPER & LOWER STACK ASSY

SIZE	CODE ID NO	DWG NO	REV
F	241AW	8900	H-14-105695 3

SCALE SHOWN | SHT 820936 | SHEET 3 OF

JUL 21 2010
DATE
HANFORD RECEIVED
ETA
58

H-14-105695 3 3 3

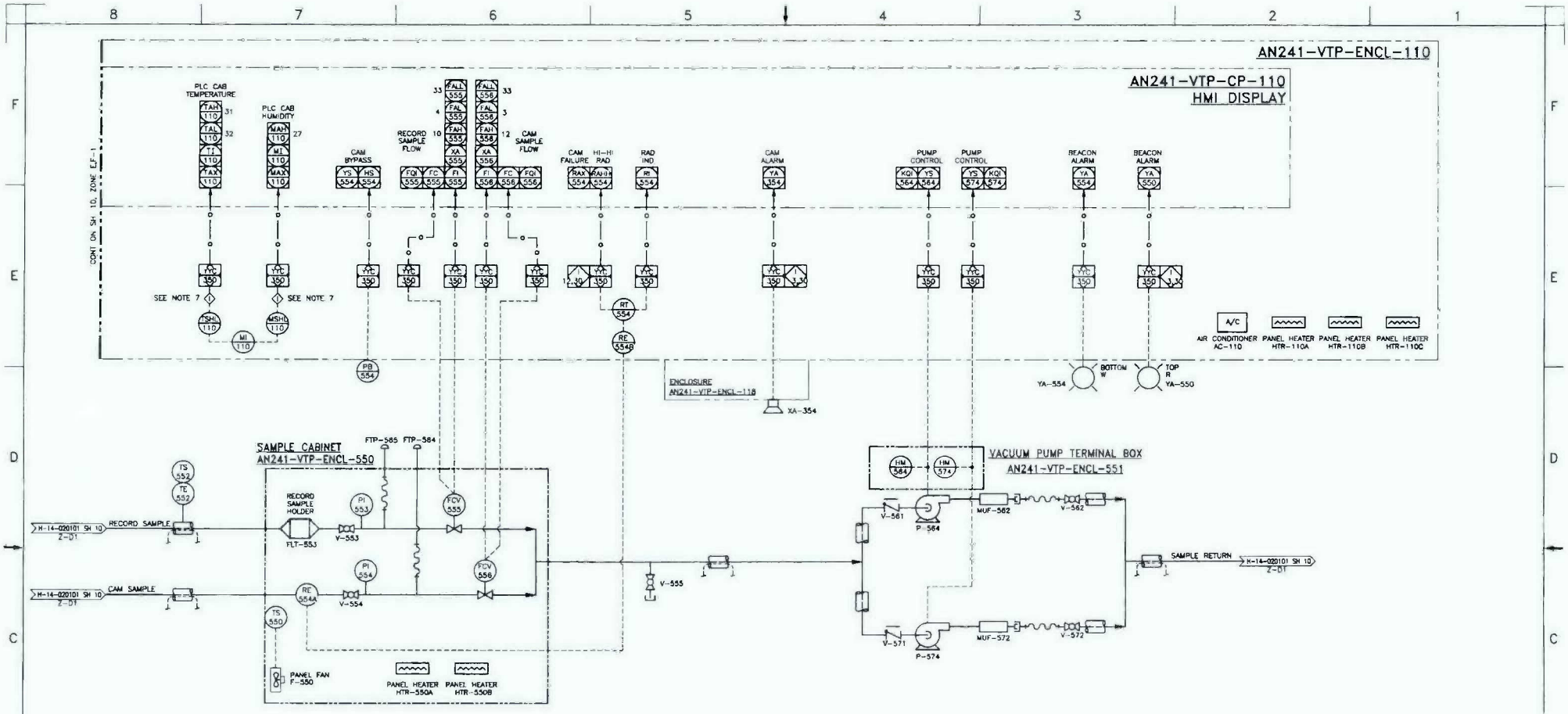

EFFLUENT MONITORING SYSTEM (EMS) – OPERATIONAL LOGIC

1. VACUUM PUMP WILL START AND STOP AUTOMATICALLY IN CONCERT WITH THE EXHAUSTER FAN, IF BOTH RECORD SAMPLE AND CAM SAMPLE LOW-LOW FLOW SETPOINTS ARE EXCEEDED. THE IDLE VACUUM PUMP WILL AUTOMATICALLY START WHILE THE CURRENTLY OPERATING VACUUM PUMP SHUTS DOWN. THIS AUTOMATIC SWAP OF THE OPERATIONAL PUMPS WILL OCCUR ONLY ONCE WITHOUT A RESET OF THE SYSTEM.
2. CAM DETECTION OF HIGH RADIATION OR MONITORING SYSTEM FAILURE WILL ALARM AND SHUT EXHAUSTER DOWN.
3. CAM BYPASS OVERRIDES THE HIGH BETA, CAM FAILURE, AND SAMPLE FLOW ALARMS. ALL OTHER ALARMS WILL OVERRIDE THE CAM BYPASS FUNCTION AND OPERATE NORMALLY DURING THE BYPASS.
4. THE FOLLOWING VALUES WILL BE DISPLAYED ON HMI DURING BYPASS:

   STACK FLOW (ACF),
   STACK TOTAL (CF),
   RECORD SAMPLER FLOW (SCF),
   RECORD TOTAL (CF),
   CAM SAMPLE FLOW (SCF),
   CAM TOTAL (CF)

NOTES:

1. FOR GENERAL NOTES SEE SHEET 1.
2. FOR SYSTEM ALARMS, INTERLOCKS, AND SPECIFIC NOTES APPLICABLE TO THIS SHEET, SEE SHEET 6.
3. REVISION 2 OF THIS DRAWING WAS FIELD WALKED DOWN IN AUGUST 2010. FOR CHANGES MADE AND FOR ITEMS NOT VERIFIED IN FIELD, SEE ECN-10-001004.

SUPERSEDES DWG
H-14-104459, SH 7, REV 0

JUL 25 2011

DWG NO	TITLE	REF NUMBER	TITLE
DRAWING TRACEABILITY LIST		REFERENCES	
		NEXT USED ON H-14-020101-1	

REV	DATE	DESCRIPTION	REVISIONS
S			
R8	4	INC ECN-11-001363	

U.S. DEPARTMENT OF ENERGY
Office of River Protection

VENTILATION TANK PRIMARY SYSTEM (VTP) A-TRAIN O&M SYS P&ID

SIZE	CODE ID	PROJECT NO	DWG NO	REV
F	241AN	7004	H-14-020101	4

SCALE NONE | ECN 721910-R0 | SHEET 12

GENERAL NOTES:

1. INSTALLATION SHALL CONFORM TO THE 2002 EDITION OF THE NATIONAL ELECTRICAL CODE, NFPA 70.
2. ABBREVIATIONS ARE PER ASME Y1.1.
3. INSTALL HEAT TRACE ON TUBING TO CAM AND RECORD SAMPLE HOLDER. USE GLASS TAPE TO FASTEN HEAT TRACE.
4. ALL POWER WIRES WIRE SHALL BE THHN/THWN CONDUCTOR SIZE AWG #12 UNLESS OTHERWISE NOTED.
5. ALL INSTRUMENT WIRE AND 5 VDC POWER WIRE SHALL BE TSP #18 AW TYPE TC (# OF PAIRS AS REQUIRED) UNLESS OTHERWISE NOTED.
6. CONNECT CAM DETECTOR TO SAMPLE PROBE. SHIM BETWEEN DETECTOR AND MOUNT TO PREVENT LOADING THE DETECTOR WHEN MOUNTING HARDWARE IS TIGHTENED. (ELONGATE MOUNTING HOLES AS NECESSARY.) CONNECT FLEXIBLE TUBING TO DISCHARGE OF CAM.
7. TOLERANCES SHALL BE AS FOLLOWS, UNLESS OTHERWISE NOTED:

   FRACTIONS: ± 1/16"
   DECIMALS: ± .06

8. FOR SAMPLE TUBING RUNS:
   - THERE SHALL BE NO INWARD FACING STEPS AT THE TUBING CONNECTIONS THAT CAUSE MORE THAN A 1% REDUCTION IN TUBE DIAMETER.
   - THE TUBING ENDS SHALL BE FREE OF BURRS AND CRIMPING.
   - BENDS SHALL HAVE A CURVATURE RATIO (RADIUS OF CURVATURE OF THE BEND DIVIDED BY THE TUBE DIAMETER) OF AT LEAST 3.0.
   - FLATTENING OF THE BEND CAUSED BY A BENDING PROCESS SHALL NOT EXCEED 15%, WHERE FLATTENING IS DEFINED IN TERMS OF THE ORIGINAL AND MINOR AXES OF THE TUBE CROSS SECTION AT THE ANGULAR MIDPOINT OF THE BEND.

   SPECIAL FABRICATION TECHNIQUES MAY BE REQUIRED TO MEET THESE SPECIFICATIONS (ANSI/HPS N13.1-1999).
9. NOT USED
10. THE MASS FLOW CONTROLLERS SHALL MEET THE FOLLOWING SPECIFICATIONS:
    - RANGE: 0-4.00 SCFM OF AIR
    - UPSTREAM PRESSURE: 8.1 PSIA
    - DOWNSTREAM PRESSURE: 6.1 PSIA
    - WITH THE FOLLOWING ORDERING CODES:

    01- H PINOUT (HASTINGS)
    02- 4-20 mA OUTPUT SIGNAL WITH A 0-5.00 VDC INPUT SIGNAL
    04- 3/4" SWAGELOK SYSTEM CONNECTIONS
    01- 500 PSIG WORKING PRESSURE RATING
    01- 5 POINT NIST (STANDARD)
11. PANELS SHALL BE ASSEMBLED, INSPECTED AND UL LABELED PER UL 508A.
12. PREFIX EQUIPMENT IDENTIFICATION NUMBERS WITH "AW241-".
13. LABEL EQUIPMENT AS SHOWN ON SH 2 AND LABEL VALVES AND PRESSURE INDICATOR AS SHOWN ON SH 3. APPLY EIN TAGS IN ACCORDANCE WITH TFC-ENG-STD-12. FIELD MOUNT NAMEPLATES IN APPROXIMATE AREAS AS SHOWN.
14. DETECTOR ELECTRONICS LOCATED REMOTELY (10 FOOT CABLE LENGTH) FROM THE DETECTOR. PROCURED AS PART # OPT7AMC. FOR MAINENANCE, REPAIR, OR REPLACEMENT USE PART # AMS4 OPT75D.
15. WHEN INSTALLING ITEM 12 REMOVE UPPER HOUSING AND REPLACE WITH ITEM 30. DISCARD NPT-TO-HOSE BARB FITTINGS AND THREAD 3/8 NPT OF ITEM 13 INTO LOWER HOUSING. INSTALL PER MANUFACTURER'S INSTRUCTIONS.
16. WIRE COLORS ARE PER NFPA 79.
17. SEE DETAILS LOCATED ON SHEET 4 FOR MODIFICATIONS TO COAXIAL CABLE LOCATED AT VTP-RE-554A.
18. THE EBERLINE DETECTOR IS SUPPLIED WITH A LND, MODEL #433 PROPORTIONAL COUNTER, THIS COUNTER TO BE REPLACED WITH THE LND INC. MODEL #733 GIEGER-MUELLER COUNTER SHOWN IN ITEM NUMBER 75 OF THE PARTS LIST.
19. REVISION 3 OF THIS DRAWING WAS FIELD WALKED DOWN IN JULY 2010. FOR CHANGES MADE AND FOR ITEMS NOT VERIFIED IN FIELD, SEE ECN-10-000781.

PARTS LIST/MATERIAL LIST

QTY -010	PARTS / DASH NUMBER	NOMENCLATURE/DESCRIPTION	MATERIAL/REFERENCE	SHEET	ITEM NO
3	YP11582176	COAX CABLE, 10 FT	COM'L	3	40
1	SS-1210-3	UNION TEE	SWAGELOK		41
					42
4	SS-4-SE	STREET ELBOW, MALE & FEMALE NPT 1/4"	SWAGELOK		43
AR		TUBING, 3/4" OD X .049 WALL, SM LS	ASTM A269 TYPE 304L	3	44
1	D-AH2001A	HEATER, 120V, 200W, UL LISTED WITH BUILT-IN THERMOSTAT, ADJ 0°F-100°F	HOFFMAN	3	45
	SEE NOTE 13	NAMEPLATE			46
3	SS-12-TA-1-12	MALE ADAPTER	SWAGELOK		47
2	SS-12-CS	CROSS	SWAGELOK		48
2	SS-12-RB-4	REDUCING BUSHING	SWAGELOK		49
3	SS-810-1-12	MALE CONNECTOR	SWAGELOK		50
2	SS-12-P	PLUG	SWAGELOK		51
2		FUSE, SLO-BLO, 0.5A 1/4 X 1 1/4	COML		52
1		FUSE, SLO-BLO, 1A 1/4 X 1 1/4	COML		53
2		FUSE, SLO-BLO, 15A 1/4 X 1 1/4	COML		54
AR	COML	WIRE, 12 AWG, SINGLE CNDCT, COPPER, BLACK	THHN/THWN		55
AR	COML	WIRE, 12 AWG, SINGLE CNDCT, COPPER, BLACK, WHITE	THHN/THWN		56
AR	COML	WIRE, 12 AWG, SINGLE CNDCT, COPPER, GREEN	THHN/THWN		57
AR	COML	WIRE, 14 AWG, SINGLE CNDCT, COPPER, BLUE	THHN/THWN		58
AR	COML	WIRE, 14 AWG, SINGLE CNDCT, COPPER WHITE, W/ BLUE STRIPE	THHN/THWN		59
1	EB 10-10	INSERTION BRIDGE (USE W/ ITEM 29)	PHOENIX CONTACT		60
AR	EB 10-8	INSERTION BRIDGE (USE W/ ITEM 34)	PHOENIX CONTACT		61
AR	COML	WIRE, 14 AWG, SINGLE CNDCT, COPPER RED W/ YELLOW	THHN/THWN		62
1	NPH35DIN	DIN RAIL KIT, USE W/ ITEM 14	ACOPIAN	3	63
1	SS-810-1-6	MALE CONNECTOR	SWAGELOK		64
1	SS-810-1-4	MALE CONNECTOR	SWAGELOK		65
1	SS-1210-R-8	REDUCER	SWAGELOK		66
2	SS-1211-PC	PORT CONNECTOR	SWAGELOK		67
1	SS-810-9	UNION ELBOW	SWAGELOK		68
2	SS-811-PC	PORT CONNECTOR	SWAGELOK		69
1	SS-PB8 TA8 TA8-12	PUSH-ON HOSE ASSEMBLY SHORTEN AS REQD	SWAGELOK		70
4	SS-PB6-TA6	FLEXIBLE HOSE TUBING ADAPTER	SWAGELOK		71
AR	PB-6	PUSH-ON FLEXIBLE HOSE	SWAGELOK		72
2	SS-810-71-6	BULKHEAD FEMALE CONNECTOR, 1/2" TUBE TO 1/2" FNPT	SWAGELOK		73
2	2	PLUG SS-8-P	SWAGELOK		74
1	733	GEIGER-MUELLER DETECTOR (REPLACES 433 DETECTOR WITHIN ITEM 10)	LND INC.	3	75
3	COML	HEAT TRACE TERM BLOCK	RAYCHEM (OR EQUAL)	3	78

QTY -010	PARTS / DASH NUMBER	NOMENCLATURE/DESCRIPTION	MATERIAL/REFERENCE	SHEET	ITEM NO
	-010	ASSEMBLY, SAMPLE CABINET		3	1
1	A-48H36FLP	ENCLOSURE, 48"H X 36"W X 18"D, NEMA TYPE 4 OR 4X WITH DOOR CLAMPS	HOFFMAN	3	2
1	A-48P36	INTERIOR PANEL, 48"H X 36"W, STEEL	HOFFMAN	3	3
2	HFC-303-01-02-04-01-01, ZB-13-437	SEE NOTE 10. MASS FLOW CONTROLLER LOW PRESSURE, DROP SPRING	TBE-HASTINGS	3	4
1	A-4AXFN	FAN, SAMPLE CABINET, 4" 100 CFM	HOFFMAN	3	5
1	A-BRKT-4	BRACKET, FAN	HOFFMAN	3	8
1	AMC-1B	THERMOSTAT, LINE SENSING	RAYCHEM	3	7
AR	5BTV1-CT	HEAT-TRACE, 5W/FT, SELF-REGULATING	RAYCHEM	3	8
1	A-GARD4	FINGER GUARD	HOFFMAN	3	9
1	SEE NOTE 14	CAM, IN-LINE SAMPLING HEAD (SEE NOTES 14 & 7)	EBERLINE	3	10
1	D-AH8001B	HEATER, 115V, 800W, UL LISTED WITH BUILT-IN THERMOSTAT, ADJ 0°F-100°F	HOFFMAN	3	11
1	#2220	FILTER HOLDER (SEE NOTE 15)	GELMAN SCIENCES	3	12
1	SS-PB8 TA8 TA8-18	FLEXIBLE HOSE ASSEMBLY	SWAGELOK	3	13
1	LD15-100	DUAL OUTPUT VOLTAGE, DC POWER SUPPLY, ±15VDC, CASE SIZE TN8H	ACOPIAN	3	14
2	SS-63CS8	VALVE, BALL, 1/2", SWAGELOK ENDS, 316SS	WHITEY	3	15
1	A-TEMINO	FAN CONTROL THERMOSTAT, W/ N.O. CONTACT, 120V, UL LISTED	HOFFMAN	3	16
2	A-VK88	LOUVER PLATE KIT	HOFFMAN	3	17
2	A-FLT86	FILTER W/ MOUNTING BRACKETS	HOFFMAN	3	18
1	SS-2000-61	UNION, BULKHEAD, 1-1/4"X1-1/4", 316SS	SWAGELOK	3	19
1	SS-1210-61	UNION, BULKHEAD, 3/4"X3/4", 316SS	SWAGELOK	3	20
					21
2	25-1009SW-02L-XLJLL	VACUUM GAUGE, 0-30"Hg LIQUID FILLED	ASHCROFT	3	22
1	SS-2000-6	UNION, 1-1/4"XT-1/4", 316SS	SWAGELOK	3	23
1	H-14-105689 ITEM 12	TUBE BEND			24
AR	#9455	CABLE #20 AWG, 9 CONDUCTOR OD 0.317	BELDEN	3	25
2	17D-A15S	CONNECTOR, D SUBMINIATURE SOLDER 15 PIN (RCPT)	AMPHENOL	3	26
2	17-1725-2	CONNECTOR BACKSHELL, D SUBMINIATURE 15 PIN WITH LOCK SCREW	AMPHENOL	3	27
AR	GS-54	GLASS TAPE	RAYCHEM		28
5	30 04 17 1	FUSE TERMINAL BLOCK W/DISCONNECT LEVER, UK 6,3-HESI	PHOENIX CONTACT	3	29
1	H-14-105689 ITEM 11	FILTER COMPRESSOR WELDMENT			30
AR	08 01 73 3	MOUNTING RAIL, PERFORATED, TYPE NS. 35/7, 5	PHOENIX CONTACT	3	31
AR	12 01 44 2	UNIVERSAL END BRACKET, TYPE E/UK	PHOENIX CONTACT	3	32
AR	30 03 02 0	END COVER, TYPE D-UK 4/10	PHOENIX CONTACT	3	33
AR	30 04 36 2	TERMINAL BLOCK, TYPE UK 5 N	PHOENIX CONTACT	3	34
AR	10 51 01 6	ZACK STRIP, LABELED HORIZONTALLY, 1 - 20, TYPE LGS, QR:1-20	PHOENIX CONTACT	3	35
AR	10 51 029	ZACK STRIP, LABELED VERTICALLY 1-12, TYPE ZB 6, QR:1-12	PHOENIX CONTACT	3	36
AR	10 51 029	ZACK STRIP, LABELED VERTICALLY 1-4, TYPE ZB 6, QR:1-4	PHOENIX CONTACT	3	37
1	SS-2400-61	UNION, BULKHEAD, 1-1/2"X1-1/2", 316SS	SWAGELOK	3	38
2	E-150	HEAT TRACE END SEAL	RAYCHEM	3	39

DWG NO	TITLE
H-14-105675	AW241 EXH TRAIN A & B DWG INDEX

DRAWING TRACEABILITY LIST

REF NUMBER	TITLE	NEXT USED ON
	REFERENCES	

REV	SYM	DESCRIPTION	DATE	DRAWN	CHECKED	APPROVED
4	RB	DIRECT REV PER ECN-10-000781	11/19/10			

REVISIONS

NOV 23 2010 58

NAME	DATE
DRAWN BY	
CHECKED BY	
ENGINEER	
CAM REVISION 0	
QUALITY ASSURANCE	

U.S. DEPARTMENT OF ENERGY
Office of River Protection

AW241-VTP (W-314)
EXHAUSTER TRAIN "A"
EFFLUENT MONITORING SYS

SIZE	SCALE OF DWG	CODE IDENT NO	DWG NO	REV
F	241AW	8900	H-14-105715	4

SCALE NONE | DATE 5/20/96 | SHEET 1 OF 4

H-14-105715 SH 4

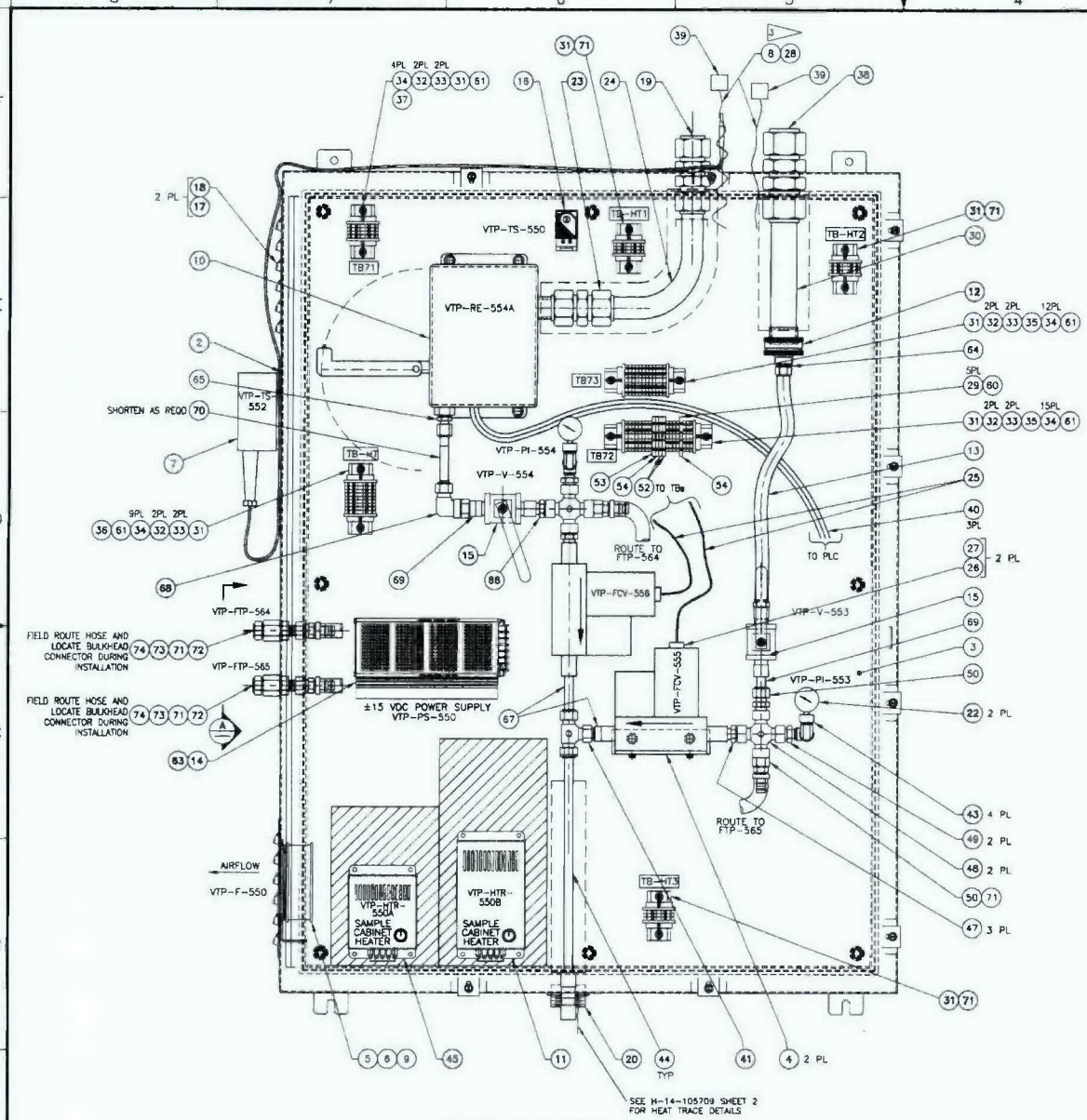

AW241-VTP-ENCL-550

1 ASSEMBLY, SAMPLE CABINET
SCALE: 3/8

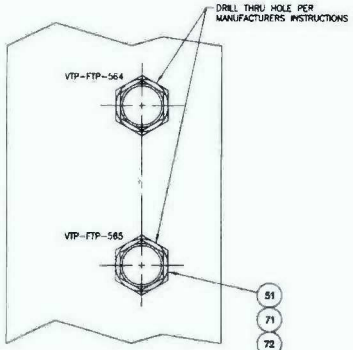

A SECTION VIEW
SCALE: NONE

NOTE:
REVISION 3 OF THIS DRAWING WAS FIELD WALKED DOWN IN JULY 2010. FOR CHANGES MADE AND FOR ITEMS NOT VERIFIED IN FIELD, SEE ECN-10-001030.

DEC 17 2010
DATE
3 OF 3

DWG NO	TITLE	REF NUMBER	TITLE
DRAWING TRACEABILITY LIST		REFERENCES	
		NEXT USED ON SHEET 1	

REV	DESCRIPTION
3	INC ECN-725597-R0 AND DIRECT REV PER ECN-10-001030

REVISIONS

U.S. DEPARTMENT OF ENERGY
Office of River Protection

AW241-VTP (W-314)
EXHAUSTER TRAIN "A"
EFFLUENT MONITORING SYS

SIZE	CODE IDENT NO	DWG NO	REV
F	241AW	5900	H-14-105715	4

SCALE 3X | SHEET 3 OF

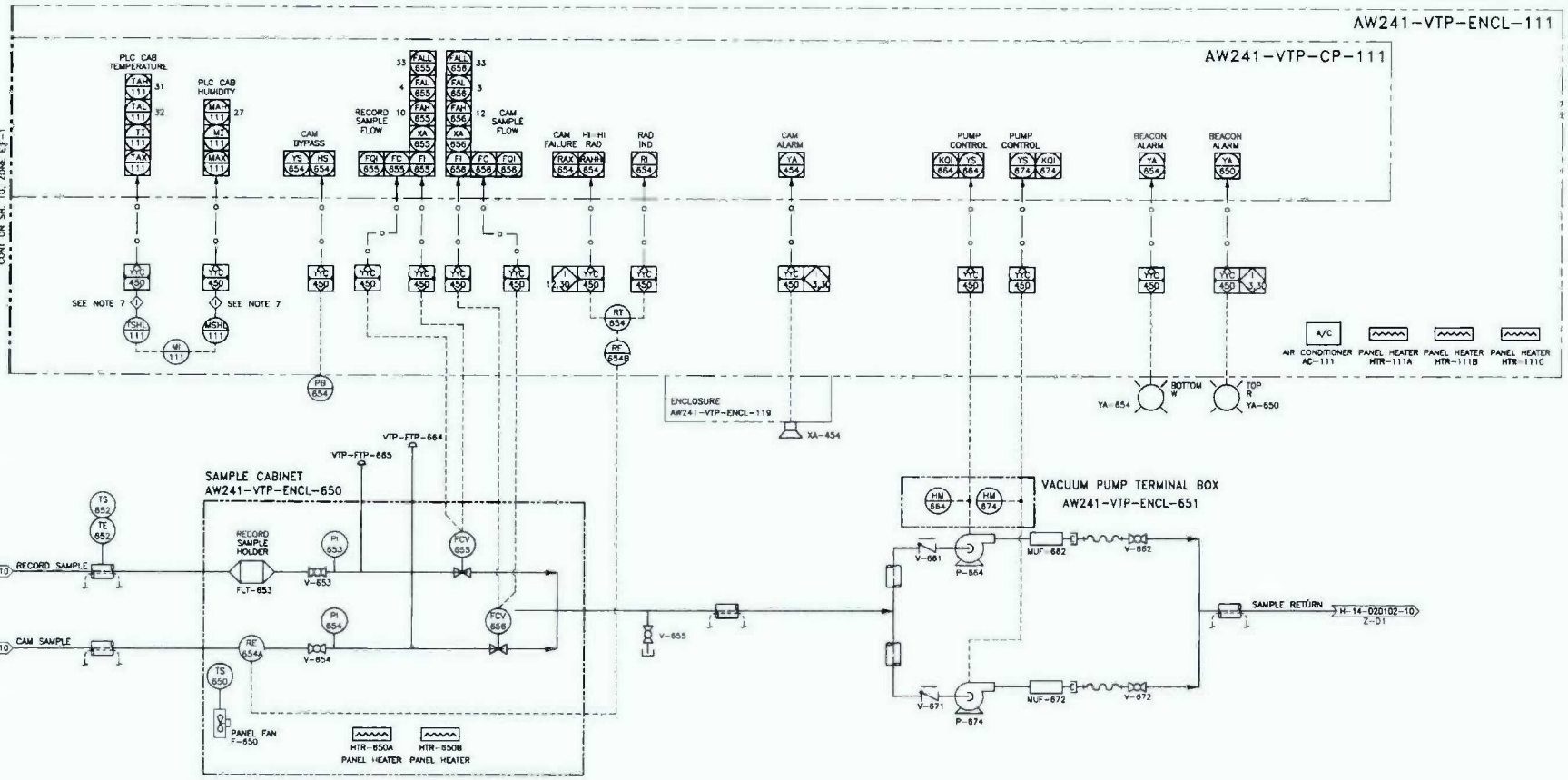

EFFLUENT MONITORING SYSTEM (EMS) – OPERATIONAL LOGIC

1. VACUUM PUMP WILL START AND STOP AUTOMATICALLY IN CONCERT WITH THE EXHAUSTER FAN, IF BOTH RECORD SAMPLE AND CAM SAMPLE LOW-LOW FLOW SETPOINTS ARE EXCEEDED. THE IDLE VACUUM PUMP WILL AUTOMATICALLY START WHILE THE CURRENTLY OPERATING VACUUM PUMP SHUTS DOWN. THIS AUTOMATIC SWAP OF THE OPERATIONAL PUMPS WILL OCCUR ONLY ONCE WITHOUT A RESET OF THE SYSTEM.
2. CAM DETECTION OF HIGH RADIATION OR MONITORING SYSTEM FAILURE WILL ALARM AND SHUT EXHAUSTER DOWN.
3. CAM BYPASS OVERRIDES THE HIGH BETA AND CAM FAILURE ALARMS. ALL OTHER ALARMS WILL OVERRIDE THE CAM BYPASS FUNCTION AND OPERATE NORMALLY DURING THE BYPASS.
4. THE FOLLOWING VALUES WILL BE DISPLAYED ON HMI DURING BYPASS:

   STACK FLOW (SCFM),
   STACK TOTAL (CF),
   RECORD SAMPLER FLOW (SCFM),
   RECORD TOTAL (CF),
   CAM SAMPLE FLOW (SCFM),
   CAM TOTAL (CF)

NOTE

1. FOR SYSTEM ALARMS, INTERLOCKS, INSTRUMENT IDENTIFICATIONS, NOTES, REFERENCES AND SYMBOL LEGEND SEE SH 4.
2. REVISION 1 OF THIS DRAWING WAS FIELD WALKED DOWN IN SEPTEMBER 2009. FOR CHANGES MADE TO THIS DRAWING AND FOR ITEMS NOT FIELD VERIFIED SEE ECN-726735-R0.

THIS DRAWING SUPERSEDES
H-14-105351 SH 9 REV 1

JUL 27 2011

REV	DESCRIPTION	DATE	BY	CHK	APPR
3	INC ECN-11-001363	07/11	R PALC		

DWG NO	TITLE	REF NUMBER	TITLE
DRAWING TRACEABILITY LIST		NEXT USED ON	REFERENCES

U.S. DEPARTMENT OF ENERGY
Office of River Protection

P&ID
241-AW HVAC
EXHAUSTER TRAIN "B"

SIZE	BLDG NO	DRAWING NO	REV
F	241AW	7004	H-14-020102	3

SCALE NONE | 728326-R0 | SHEET 12 OF

32445

GENERAL NOTES:

1. INSTALLATION SHALL CONFORM TO THE 2002 EDITION OF THE NATIONAL ELECTRICAL CODE, NFPA 70.
2. ABBREVIATIONS ARE PER ASME Y1.1.
3. INSTALL HEAT TRACE ON TUBING TO CAM AND RECORD SAMPLE HOLDER. USE GLASS TAPE TO FASTEN HEAT TRACE.
4. ALL POWER WIRES WIRE SHALL BE THHN/THWN CONDUCTOR SIZE AWG #12 UNLESS OTHERWISE NOTED.
5. ALL INSTRUMENT WIRE AND 5 VDC POWER WIRE SHALL BE TSP #16 AW TYPE TC (# OF PAIRS AS REQUIRED) UNLESS OTHERWISE NOTED.
6. CONNECT CAM DETECTOR TO SAMPLE PROBE. SHIM BETWEEN DETECTOR AND MOUNT TO PREVENT LOADING THE DETECTOR WHEN MOUNTING HARDWARE IS TIGHTENED. (ELONGATE MOUNTING HOLES AS NECESSARY.) CONNECT FLEXIBLE TUBING TO DISCHARGE OF CAM.
7. TOLERANCES SHALL BE AS FOLLOWS, UNLESS OTHERWISE NOTED:

   FRACTIONS: ± 1/16"
   DECIMALS: ± .06

8. FOR SAMPLE TUBING RUNS:
   - THERE SHALL BE NO INWARD FACING STEPS AT THE TUBING CONNECTIONS THAT CAUSE MORE THAN A 1% REDUCTION IN TUBE DIAMETER.
   - THE TUBING ENDS SHALL BE FREE OF BURRS AND CRIMPING.
   - BENDS SHALL HAVE A CURVATURE RATIO (RADIUS OF CURVATURE OF THE BEND DIVIDED BY THE TUBE DIAMETER) OF AT LEAST 3.0.
   - FLATTENING OF THE BEND CAUSED BY A BENDING PROCESS SHALL NOT EXCEED 15%. WHERE FLATTENING IS DEFINED IN TERMS OF THE ORIGINAL AND MINOR AXES OF THE TUBE CROSS SECTION AT THE ANGULAR MIDPOINT OF THE BEND.

   SPECIAL FABRICATION TECHNIQUES MAY BE REQUIRED TO MEET THESE SPECIFICATIONS (ANSI/HPS N13.1-1999).

9. NOT USED
10. THE MASS FLOW CONTROLLERS SHALL MEET THE FOLLOWING SPECIFICATIONS:
    - RANGE: 0-4.00 SCFM OF AIR
    - UPSTREAM PRESSURE: 8.1 PSIA
    - DOWNSTREAM PRESSURE: 6.1 PSIA
    - WITH THE FOLLOWING ORDERING CODES:

    01- H PINOUT (HASTINGS)
    02- 4-20 mA OUTPUT SIGNAL WITH A 0-5.00 VDC INPUT SIGNAL
    04- 3/4" SWAGELOK SYSTEM CONNECTIONS
    01- 500 PSIG WORKING PRESSURE RATING
    01- 5 POINT NIST (STANDARD)

11. PANELS SHALL BE ASSEMBLED, INSPECTED AND UL LABELED PER UL 508A.
12. PREFIX EQUIPMENT IDENTIFICATION NUMBERS WITH "AW241-".
13. LABEL EQUIPMENT AS SHOWN ON SH 2 AND LABEL VALVES AND PRESSURE INDICATOR AS SHOWN ON SH 3. APPLY DIN TAGS IN ACCORDANCE WITH TFC-ENG-STD-12. FIELD MOUNT NAMEPLATES IN APPROXIMATE AREAS AS SHOWN.
14. DETECTOR ELECTRONICS LOCATED REMOTELY (10 FOOT CABLE LENGTH) FROM THE DETECTOR. PROCURED AS PART # OPT7AMC. FOR MAINENANCE, REPAIR, OR REPLACEMENT USE PART # AMS4 OPT7SD.
15. WHEN INSTALLING ITEM 12 REMOVE UPPER HOUSING AND REPLACE WITH ITEM 30. DISCARD NPT-TO-HOSE BARB FITTINGS AND THREAD 3/8 NPT OF ITEM 13 INTO LOWER HOUSING. INSTALL PER MANUFACTURER'S INSTRUCTIONS.
16. WIRE COLORS ARE PER NFPA 79.
17. SEE DETAILS LOCATED ON SHEET 4 FOR MODIFICATIONS TO COAXIAL CABLE LOCATED AT VTP-RE-6544.
18. THE EBERLINE DETECTOR IS SUPPLIED WITH A LND INC. MODEL #433 PROPORTIONAL COUNTER. THIS COUNTER TO BE REPLACED WITH THE LND INC. MODEL #733 GIEGER-MEULLER COUNTER SHOWN IN ITEM NUMBER 75 OF THE PARTS LIST.
19. REVISION 3 OF THIS DRAWING WAS FIELD WALKED DOWN IN JUNE 2010 FOR CHANGES MADE AND FOR ITEMS NOT VERIFIED IN FIELD, SEE ECN-10-001030.

PARTS LIST/MATERIAL LIST

QTY -010	PARTS / DASH NUMBER	NOMENCLATURE/DESCRIPTION	MATERIAL/REFERENCE	SHEET	ITEM NO
3	YP11582176	COAX CABLE, 10 FT	COML	3	40
1	SS-1210-3	UNION TEE	SWAGELOK		41
					42
4	SS-4-5E	STREET ELBOW, MALE & FEMALE NPT 1/4"	SWAGELOK		43
AR		TUBING, 3/4" OD X .049 WALL, SM LS	ASTM A269 TYPE 304L	3	44
1	D-AH2001A	HEATER, 120V, 200W, UL LISTED WITH BUILT-IN THERMOSTAT, ADJ 0°F-100°F	HOFFMAN	3	45
	SEE NOTE 13	NAMEPLATE			46
3	SS-12-TA-1-12	MALE ADAPTER	SWAGELOK		47
2	SS-12-CS	CROSS	SWAGELOK		48
2	SS-12-RB-4	REDUCING BUSHING	SWAGELOK		49
3	SS-810-1-12	MALE CONNECTOR	SWAGELOK		50
2	SS-12-P	PLUG	SWAGELOK		51
2		FUSE, SLO-BLO, 0.5A 1/4 X 1 1/4	COML		52
1		FUSE, SLO-BLO, 1A 1/4 X 1 1/4	COML		53
2		FUSE, SLO-BLO, 15A 1/4 X 1 1/4	COML		54
AR	COML	WIRE, 12 AWG, SINGLE CNDCT, COPPER, BLACK	THHN/THWN		55
AR	COML	WIRE, 12 AWG, SINGLE CNDCT, COPPER, BLACK, WHITE	THHN/THWN		56
AR	COML	WIRE, 12 AWG, SINGLE CNDCT, COPPER, GREEN	THHN/THWN		57
AR	COML	WIRE, 14 AWG, SINGLE CNDCT, COPPER, BLUE	THHN/THWN		58
AR	COML	WIRE, 14 AWG, SINGLE CNDCT, COPPER WHITE W/ BLUE STRIPE	THHN/THWN		59
1	EB 10-10	INSERTION BRIDGE (USE W/ ITEM 29)	PHOENIX CONTACT		60
AR	EB 10-6	INSERTION BRIDGE (USE W/ ITEM 34)	PHOENIX CONTACT		61
AR	COML	WIRE, 14 AWG, SINGLE CNDCT, COPPER RED W/ YELLOW	THHN/THWN		62
1	NPH350IN	DIN RAIL KIT, USE W/ ITEM 14	ACOPIAN	3	63
1	SS-810-1-6	MALE CONNECTOR	SWAGELOK		64
1	SS-810-1-4	MALE CONNECTOR	SWAGELOK		65
1	SS-1210-R-8	REDUCER	SWAGELOK		66
2	SS-1211-PC	PORT CONNECTOR	SWAGELOK		67
1	SS-810-9	UNION ELBOW	SWAGELOK		68
2	SS-811-PC	PORT CONNECTOR	SWAGELOK		69
1	SS-PB8 TAB TAB-12	PUSH-ON HOSE ASSEMBLY SHORTEN AS REQD	SWAGELOK		70
4	SS-PB8-TAB	FLEXABLE HOSE TUBING ADAPTER	SWAGELOK		71
AR	PB-8	PUSH-ON FLEXIBLE HOSE	SWAGELOK		72
2	SS-810-71-8	BULKHEAD FEMALE CONNECTOR, 1/2" TUBE TO 1/2" FNPT	SWAGELOK		73
2	SS-8-P	PLUG	SWAGELOK		74
1	733	GEIGER-MUELLER DETECTOR (REPLACES 433 DETECTOR WITHIN ITEM 10)	LND INC.	4	75
3	COML	HEAT TRACE TERM BLOCK	RAYCHEM (OR EQUAL)		76

QTY -010	PARTS / DASH NUMBER	NOMENCLATURE/DESCRIPTION	MATERIAL/REFERENCE	SHEET	ITEM NO
	-010	ASSEMBLY, SAMPLE CABINET		3	1
1	A-48H36FLP	ENCLOSURE, 48"H X 36"W X 18"D, NEMA TYPE 4 OR 4X WITH DOOR CLAMPS	HOFFMAN	3	2
1	A-48P36	INTERIOR PANEL, 48"H X 36"W, STEEL	HOFFMAN	3	3
2	NFC-3D3-01-02-04-01-01, 28-13-437	SEE NOTE 10, MASS FLOW CONTROLLER LOW PRESSURE DROP SPRING	TBE-HASTINGS	3	4
1	A-4AXFN	FAN, SAMPLE CABINET, 4" 100 CFM	HOFFMAN	3	5
1	A-BRKT-4	BRACKET, FAN	HOFFMAN	3	6
1	AWC-1B	THERMOSTAT, LINE SENSING	RAYCHEM	3	7
AR	5BTV1-CT	HEAT-TRACE, 5W/FT, SELF-REGULATING	RAYCHEM	3	8
1	A-GARD4	FINGER GUARD	HOFFMAN	3	9
1	SEE NOTE 14	CAM, IN-LINE SAMPLING HEAD (SEE NOTE 14 & 18)	EBERLINE	3	10
1	D-AH8001B	HEATER, 115W, 800W, UL LISTED WITH BUILT-IN THERMOSTAT, ADJ 0°F-100°F	HOFFMAN	3	11
1	#2220	FILTER HOLDER (SEE NOTE 15)	GELMAN SCIENCES	3	12
1	SS-PB8 TAB TAB-1B	FLEXIBLE HOSE ASSEMBLY	SWAGELOK	3	13
1	LD15-100	DUAL OUTPUT VOLTAGE, DC POWER SUPPLY, ±15VDC, CASE SIZE 7N5H	ACOPIAN	3	14
2	SS-63ES8	VALVE, BALL, 1/2", SWAGELOK ENDS, 316SS	WHITEY	3	15
1	A-TEMMO	FAN CONTROL THERMOSTAT, W/ N.O. CONTACT, 120V, UL LISTED	HOFFMAN	3	16
2	A-VK86	LOUVER PLATE KIT	HOFFMAN	3	17
2	A-FLT86	FILTER W/ MOUNTING BRACKETS	HOFFMAN	3	18
1	SS-2000-81	UNION, BULKHEAD, 1-1/4"X1-1/4", 316SS	SWAGELOK	3	19
1	SS-1210-81	UNION, BULKHEAD, 3/4"X3/4", 316SS	SWAGELOK	3	20
					21
2	25-1009SW-02L-XLJL	VACUUM GAUGE, 0-30"Hg LIQUID FILLED	ASHCROFT	3	22
1	SS-2000-6	UNION, 1-1/4"X1-1/4", 316SS	SWAGELOK	3	23
1	H-14-105689 ITEM 12	TUBE BEND			24
AR	#9455	CABLE #20 AWG, 9 CONDUCTOR OD 0.317	BELDEN	3	25
2	170-A15S	CONNECTOR, D SUBMINIATURE SOLDER 15 PIN (RCPT)	AMPHENOL	3	26
2	17-1725-2	CONNECTOR BACKSHELL D SUBMINIATURE 15 PIN WITH LOCK SCREW	AMPHENOL	3	27
AR	CS-54	GLASS TAPE	RAYCHEM		28
5	30 04 17 1	FUSE TERMINAL BLOCK W/DISCONNECT LEVER, UK 6,3-HESI	PHOENIX CONTACT	3	29
1	H-14-105689 ITEM 11	FILTER COMPRESSOR WELDMENT			30
AR	08 01 73 3	MOUNTING RAIL, PERFORATED, TYPE NS, 35/7, 5	PHOENIX CONTACT	3	31
AR	12 01 44 2	UNIVERSAL END BRACKET, TYPE E/UK	PHOENIX CONTACT	3	32
AR	30 03 02 0	END COVER, TYPE D-UK 4/10	PHOENIX CONTACT	3	33
AR	30 04 36 2	TERMINAL BLOCK, TYPE UK 5 N	PHOENIX CONTACT	3	34
AR	10 51 01 6	ZACK STRIP, LABELED HORIZONTALLY, 1 - 20, TYPE LGS, OR:1-20	PHOENIX CONTACT	3	35
AR	10 51 029	ZACK STRIP, LABELED VERTICALLY 1-12, TYPE ZB 6, OR:1-12	PHOENIX CONTACT	3	36
AR	10 51 029	ZACK STRIP, LABELED VERTICALLY 1-4, TYPE ZB 6, OR:1-4	PHOENIX CONTACT	3	37
1	SS-2400-81	UNION, BULKHEAD, 1-1/2"X1-1/2", 316SS	SWAGELOK	3	38
2	E-150	HEAT TRACE END SEAL	RAYCHEM	3	39

DWG NO	TITLE
DRAWING TRACEABILITY LIST	

REF NUMBER	TITLE
H-14-105676	AW241 EXH TRAIN A & B DWG INDEX
NEXT USED ON	REFERENCES

REV	DATE	DESCRIPTION	DRAWN	CHECKED	APPROVED
3	6/10	INC ECN-725597-RO AND DIRECT REV PER ECN-10-001030			

REVISIONS

DEC 17 2010 — DATE; STAT. 3; HANFORD RELEASE 3

NAME

SEE REVISION 0

U.S. DEPARTMENT OF ENERGY
Office of River Protection

AW241-VTP (W-314)
EXHAUSTER TRAIN "B"
EFFLUENT MONITORING SYS

SIZE	CODE IDENT NO	DWG NO	REV
F	241AW	8900	H-14-105727 4

SCALE NONE | SHEET 1 OF 3

H-14-105727

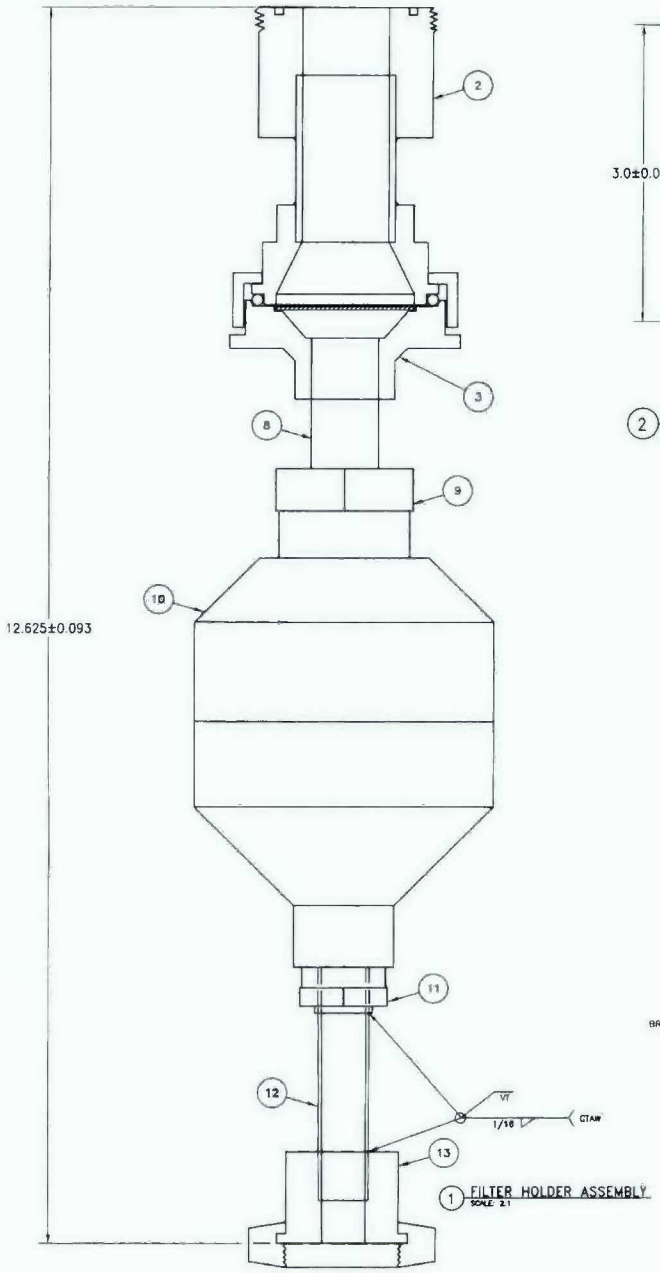

1 FILTER HOLDER ASSEMBLY
SCALE: 2:1

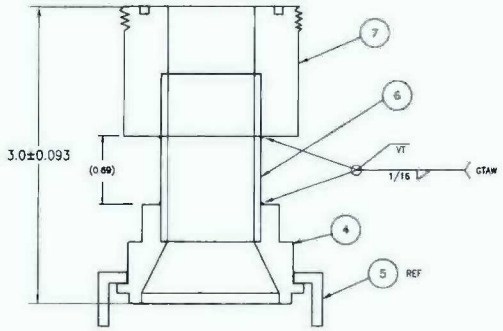

2 FILTER HOLDER INLET ASSEMBLY
SCALE: 2:1

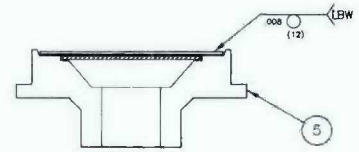

3 FILTER HOLDER OUTLET ASSEMBLY
SCALE: 2:1

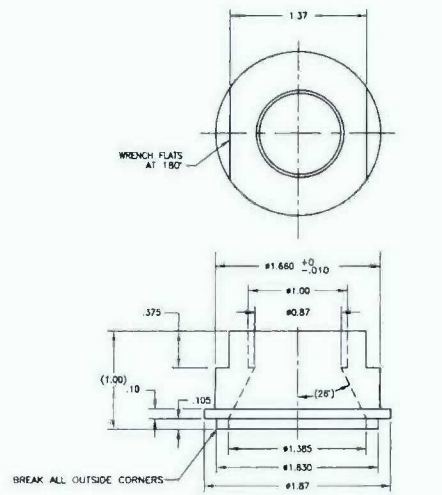

4 FILTER COMPRESSOR
SCALE: 2:1

– INTERIOR SURFACES 32 MICROINCH FINISH

PARTS/MATERIAL LIST

QTY REQD -040	-030	-020	-010	REF. DES.	PART/DASH NO.	NOMENCLATURE/DESCRIPTION	MATERIAL/REF.	SHT	ITEM NO.
			X		-010	ASSEMBLY, FILTER HOLDER			1
		X			1	-020	ASSEMBLY, FILTER HOLDER INLET		2
	X				1	-030	ASSEMBLY, FILTER HOLDER OUTLET	(I/N 5 MODIFIED)	3
X		1				-040	ASSEMBLY, FILTER COMPRESSOR	300 SERIES SST	4
	1				2220	IN-LINE FILTER HOLDER, 47mm, 316 STAINLESS STEEL	PALL GELMAN LABORATORY (MODIFIED)		5
		1				TUBING, 1.0" OD X .065" WALL X 2.0" L (CUT TO REQ'D LENGTH)	300 SERIES SST ASTM A269		6
		1			3434-5-B-316 (.065)	O-RING TUBE UNION, 1.0", SOCKETWELD, 316 SST (THREADPIECE)	HART INDUSTRIES		7
			1		SS-6-HN	HEX NIPPLE, 3/8" NPT	SWAGELOK/CAJON		8
			1		SS-16-RB-6	REDUCING BUSHING, 1" MNPT X 3/8" FNPT	SWAGELOK/CAJON		9
			1		2500-44	IN-LINE COMBINATION FILTER AND CARTRIDGE HOLDER	RADECO (MODIFIED)		10
			1		SS-810-1-8	MALE CONNECTOR, 1/2" TUBE X 1/2" NPT	SWAGELOK		11
			1			TUBING, 1/2" OD X .065" WALL X 3" L (CUT TO REQ'D LENGTH)	300 SERIES SST ASTM A269		12
			1		3434-3-B-316 (.065)	O-RING TUBE UNION, 1/2", SOCKETWELD, 316 SST (TAILPIECE & UNION NUT)	HART INDUSTRIES		13
									14
									15

GENERAL NOTES: (UNLESS OTHERWISE NOTED)

1. ALL DIMENSIONS ARE IN INCHES UNLESS OTHERWISE NOTED.

   TOLERANCE SHALL BE:
   0.X = ±.1
   0.XX = ±.010
   0.XXX = ±.005

2. WELDERS & PROCEDURES TO BE QUALIFIED TO ASME SECTION IX AND HNF-5532, REV. 0
3. WELDING AND VISUAL WELD INSPECTION SHALL BE PERFORMED IN ACCORDANCE WITH HNF-5532, REV. 0.
4. LASER BEAM WELD IS TO HOLD FILTER SCREEN IN PLACE ONLY. NO WELDING QUALIFICATION REQUIRED.
5. FILTER HOLDER ASSEMBLY (I/N 1) SHALL BE LEAK TESTED PER THE REQUIREMENTS OF ANSI/HPS N13.1-1999, SECTION 8.9. THE FILTER LEAK-BY AND SEALING RING LEAK RATE SHALL NOT EXCEED 0.1 SCFM AT 70 INWG DIFFERENTIAL PRESSURE.
6. THE INLET OF PART NO. 10 HAS BEEN OPENED UP TO 1" FEMALE NPT.
7. DO NOT INSTALL A FILTER PAPER INSIDE PART NO. 10.
8. CUT OFF TUBE SIDE OF FITTING AND DRILL THROUGH ITEM No. 11 FOR 1/2" TUBING AS REQD TO ACHIEVE OVERALL LENGTH.
9. THE WALL TUBING (ITEM NO. 6 ON PARTS LIST) WAS CUT THROUGH THE TUBE IN NOW TWO PIECES AND WELDED WITH A 1/16 FILLET AS REQUIRED BY THE DRAWING.

MAY 23 2011
DATE
FTA 4
TRANSFERRED RELEASED
17

NOTE:

REVISION 0 OF THIS DRAWING WAS FIELD WALKED DOWN IN FEBRAURY 2011. FOR CHANGES MADE AND FOR ITEMS NOT VERIFIED IN FIELD, SEE ECN-11-000346.

DRAWING TRACEABILITY LIST

DWG NO	TITLE

REFERENCES

REF NUMBER	TITLE
M-22525	W-030
H-14-020107	VTP O&M SYSTEM P&ID

NEXT USED ON H-2-131000

REVISIONS

REV	DESCRIPTION
S	INC ECN-568969, ECN-723893-R0 AND DIRECT REV PER ECN-11-000346
1	

NAME

U.S. DEPARTMENT OF ENERGY
Office of River Protection

RECORD SAMPLE FILTER HOLDER ASSEMBLY

SIZE	CODE IDENT NO.	DRAWING NO.	REV
F	241AZ 702	5901 H-14-105158	1

SCALE 2:1 | MF 633695 | SHEET 1 OF 1

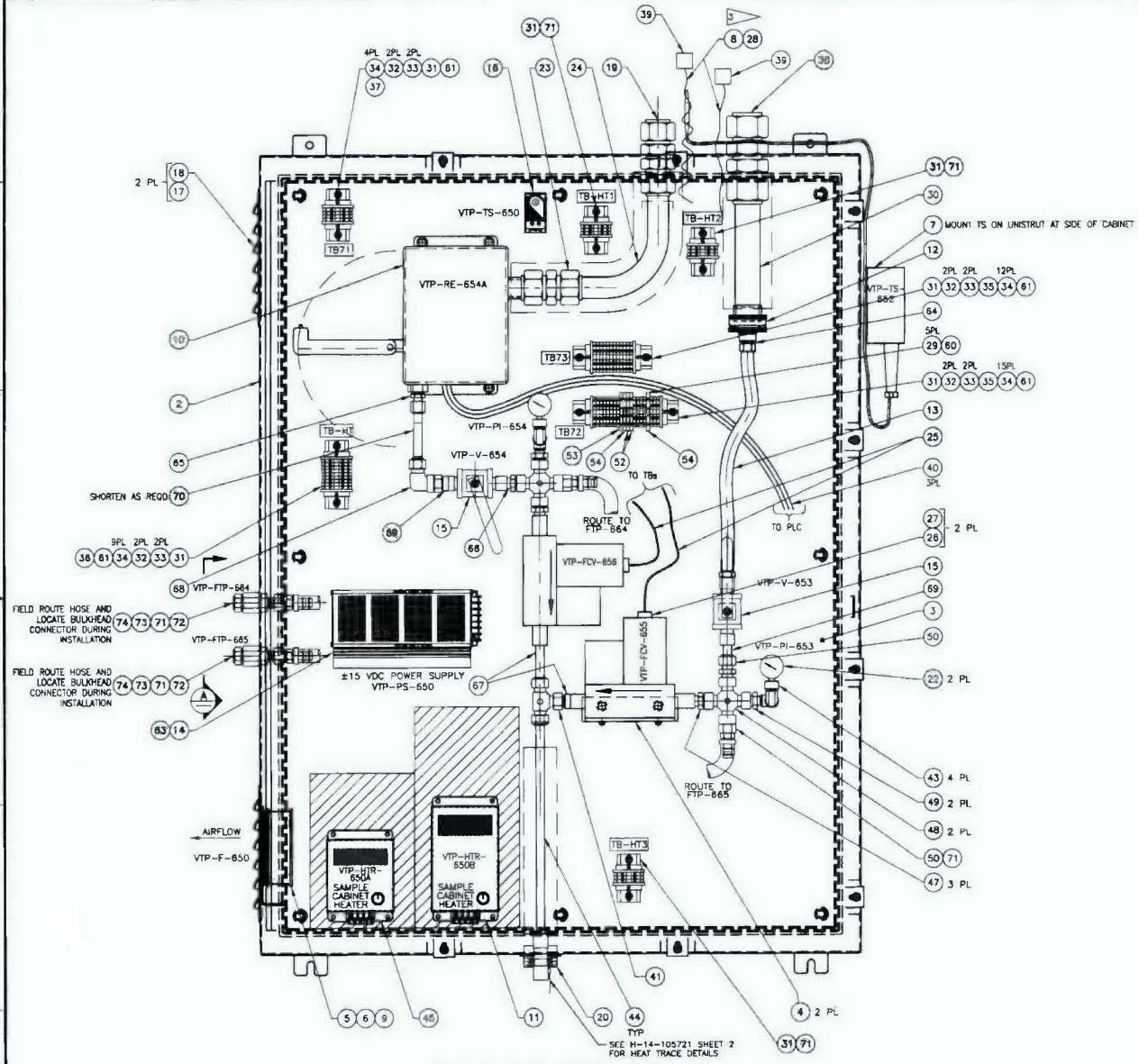

AW241-VTP-ENCL-650

1 ASSEMBLY, SAMPLE CABINET
SCALE: 3/8

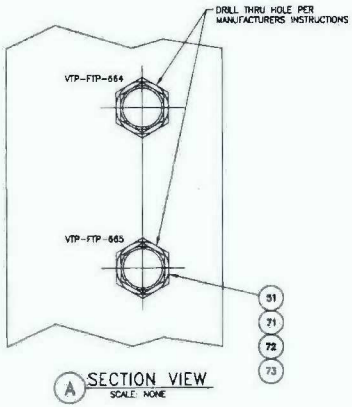

A SECTION VIEW
SCALE: NONE

NOTE:
REVISION 3 OF THIS DRAWING WAS FIELD WALKED DOWN IN JUNE 2010. FOR CHANGES MADE AND FOR ITEMS NOT VERIFIED IN FIELD, SEE ECN-10-000391.

AUG 27 2010

DWG NO	TITLE	REF NUMBER	TITLE
DRAWING TRACEABILITY LIST		REFERENCES	
		NEXT USED ON SHEET 1	

REVISIONS			
3	RB	INC ECN-725597-R0 AND DIRECT REV. PER ECN-10-000391	
4			

U.S. DEPARTMENT OF ENERGY
Office of River Protection

AW241-VTP (W-314)
EXHAUSTER TRAIN "B"
EFFLUENT MONITORING SYS

F	241AW	B90D	H-14-105727
3X		820938	3

SEE REVISION 0

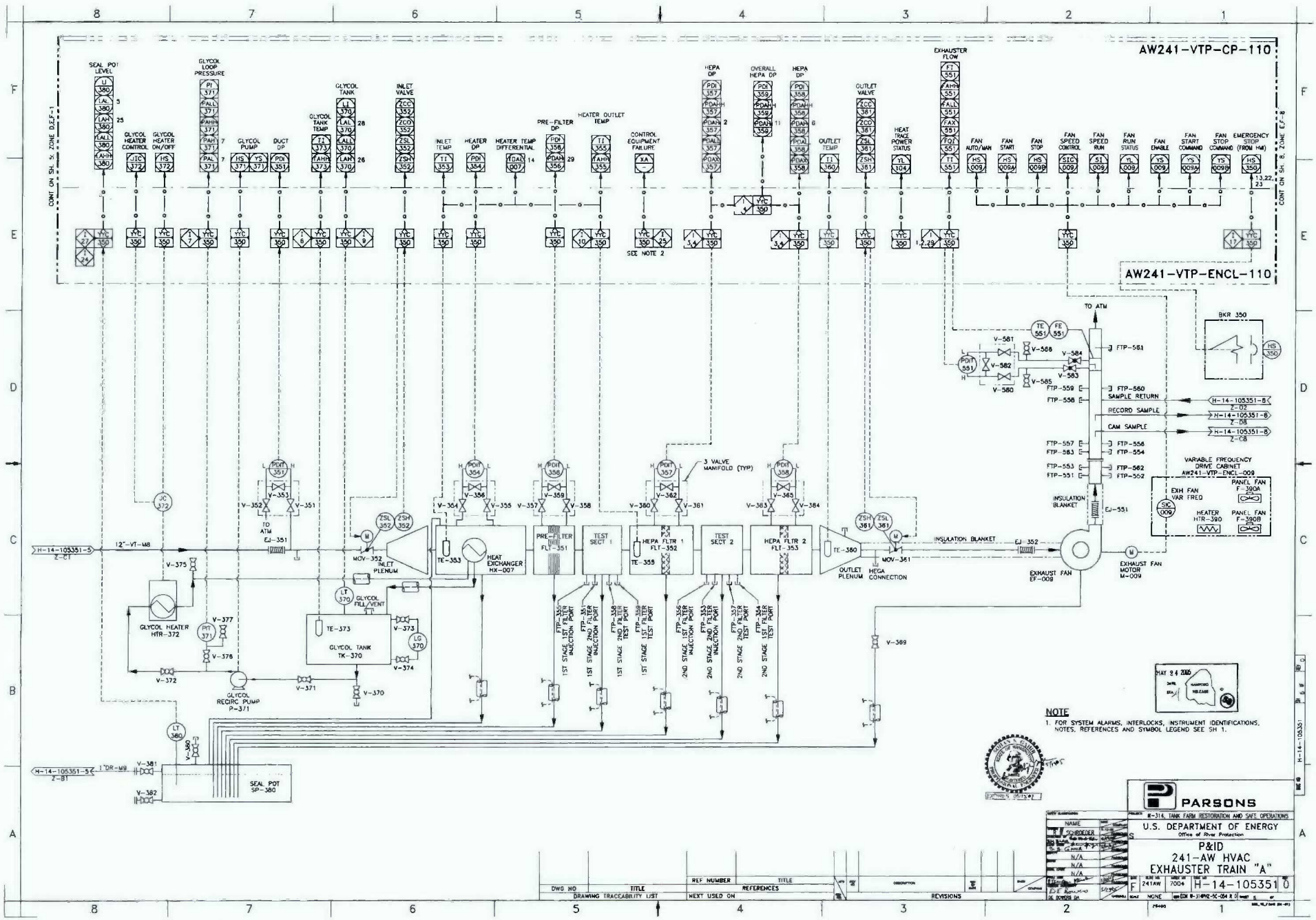
AW241-VTP-CP-110
AW241-VTP-ENCL-110
SEAL POT LEVEL
GLYCOL LOOP PRESSURE
GLYCOL HEATER CONTROL
GLYCOL HEATER ON/OFF
GLYCOL PUMP
DUCT DP
GLYCOL TANK TEMP
GLYCOL TANK
INLET VALVE
INLET TEMP
HEATER DP
HEATER TEMP DIFFERENTIAL
PRE-FILTER DP
HEATER OUTLET TEMP
CONTROL EQUIPMENT FAILURE
HEPA DP
OVERALL HEPA DP
OUTLET VALVE
OUTLET TEMP
HEAT TRACE POWER STATUS
EXHAUSTER FLOW
FAN AUTO/MAN
FAN START
FAN STOP
FAN SPEED CONTROL
FAN SPEED RUN
FAN RUN STATUS
FAN ENABLE
FAN START COMMAND
FAN STOP COMMAND
EMERGENCY STOP (FROM HMI)
CONT ON SH. 5; ZONE D,E,F-1
CONT ON SH. 8; ZONE E,F-8
SEE NOTE 2
TO ATM
FTP-561
FTP-560
SAMPLE RETURN
RECORD SAMPLE
CAM SAMPLE
FTP-559
FTP-558
FTP-557
FTP-583
FTP-556
FTP-554
FTP-553
FTP-551
FTP-562
FTP-552
INSULATION BLANKET
VARIABLE FREQUENCY DRIVE CABINET AW241-VTP-ENCL-009
EXH FAN VAR FREQ
HEATER HTR-390
PANEL FAN F-390A
PANEL FAN F-390B
BKR 350
3 VALVE MANIFOLD (TYP)
12"-VT-M8
H-14-105351-5 Z-C1
TO ATM
MOV-352 INLET PLENUM
HEAT EXCHANGER HX-007
PRE-FILTER FLT-351
TEST SECT 1
HEPA FLTR 1 FLT-352
TEST SECT 2
HEPA FLTR 2 FLT-353
OUTLET PLENUM
HEGA CONNECTION
MOV-361
INSULATION BLANKET
EXHAUST FAN EF-009
EXHAUST FAN MOTOR M-009
GLYCOL HEATER HTR-372
GLYCOL FILL/VENT
GLYCOL TANK TK-370
GLYCOL RECIRC PUMP P-371
1ST STAGE 1ST FILTER INJECTION PORT
1ST STAGE 2ND FILTER INJECTION PORT
1ST STAGE 2ND FILTER TEST PORT
1ST STAGE 1ST FILTER TEST PORT
2ND STAGE 1ST FILTER INJECTION PORT
2ND STAGE 2ND FILTER INJECTION PORT
2ND STAGE 2ND FILTER TEST PORT
2ND STAGE 1ST FILTER TEST PORT
H-14-105351-5 Z-B1
1"DR-M9
SEAL POT SP-380
NOTE
1. FOR SYSTEM ALARMS, INTERLOCKS, INSTRUMENT IDENTIFICATIONS, NOTES, REFERENCES AND SYMBOL LEGEND SEE SH 1.
PARSONS
U.S. DEPARTMENT OF ENERGY
Office of River Protection
P&ID
241-AW HVAC
EXHAUSTER TRAIN "A"
H-14-105351
DRAWING TRACEABILITY LIST
REFERENCES
REVISIONS

S

CH2M HILL DOCUMENT RELEASE FORM

(1) Document Number:	HNF-EP-0479	(2) Revision Number: 5	(3) Effective Date:
(4) Document Type:	☐ Digital Image ☒ Hard copy ☐ PDF ☐ Video	(a) Number of pages (including the DRF) or number of digital images	77
(5) Release Type	☐ New ☐ Cancel	☐ Page Change	☒ Complete Revision
(6) Document Title:	Facility Effluent Monitoring Plan for the Tank Farms		
(7) Change/Release Description:	Complete revision to address change in operating status of exhausters, relocation of exhausters, and addition of exhausters, new revisions of references.		
(8) Change Justification:	Periodic refiew of the document is required by requlation and company procedures, to identify if changes are needed. New exhuaters have been installed, exhausters have been reomoved from service pending closure as emission points, U. S. Department of Energy Orders have been revised, as well as applicable regulations and industry standards.		

(9) Associated Structure, System, and Component (SSC) and Building Number:	(a) Structure Location:	(c) Building Number:
	All tank farm facilities	241 or 242
	(b) System Designator:	(d) Equipment ID Number (EIN):
	VT, VTA, VTP	

(10) Impacted Documents:	(a) Document Type	(b) Document Number	(c) Document Revision
	NONE		

(11) Approvals:

(a) Author (Print/Sign): G. Crummel	John D Guberski for GC [JD Guberski]	Date: 11/11/2005
(b) Responsible Manager (Print/Sign): P. C. Miller	John D Guberski for PCM [JD Guberski]	Date: 11/11/2005
(c) Reviewer (Optional, Print/Sign):		Date:
(d) Reviewer (Optional, Print/Sign):		Date:

(12) Distribution:

(a) Name	(b) MSIN	(a) Name	(b) MSIN	Release Stamp
L. P. Diediker	H8-13			
J. D. Guberski	R1-51			
P. C. Miller	R1-51			
L. L. Penn	H6-03			
J. A. Voogd	H6-03			

DATE: NOV 14 2005 HANFORD RELEASE
STA: 4 ID: 8

(13) Clearance	(a) Cleared for Public Release	(b) Restricted Information?	(c) Restriction Type:
	☑ Yes ☐ No	☐ Yes ☑ No	

(14) Clearance Review (Print/Sign): L. Fox Leann Fox Date: 11-14-05

HNF-EP-0479-5

FACILITY EFFLUENT MONITORING PLAN FOR THE TANK FARMS

Prepared By:
G. M. Crummel

Date Published
July 2005

CH2MHILL
Hanford Group, Inc.

P.O. Box 1500
Richland, Washington

Contractor for the U. S. Department of Energy
Office of River Protection under Contract DE-AC27-99RL14047

TRADEMARK DISCLAIMER. Reference herein to any specific commercial product, process, or service by trade name, trademark, manufacturer, or otherwise does not necessarily constitute or imply its endorsement, recommendation or favoring by the United States Government or any agency thereof or its contractors or subcontractors.

Printed in the United States of America. To obtain copies of this document, contract: Document Control Services P.O. Box 950, Mailstop H6-08, Richland, WA 99352, Phone (509) 372-2420; Fax (509) 376-4989

Approved For Public Release

DATE: NOV 14 2005
HANFORD RELEASE
STA: 4 ID: 8

HNF-EP-0479-5

APPROVAL

Approved By: _____ 6/27/05

P. C. Miller, Date
Environmental Support and Assessment Programs
CH2M HILL Hanford Group, Inc.

ABSTRACT

Environmental monitoring is required by the U.S. Department of Energy (DOE) in Order 450.1 for any operations that involve hazardous materials and radioactive substances that could impact employee, public health and safety, or the environment. The purpose of environmental monitoring is to detect and characterize releases from DOE activities; assess impacts; estimate the dispersal patterns in the environment; characterize pathways, exposures and doses to individuals, members of the public, and to the population; and to evaluate the potential impacts to nearby biota. This facility effluent monitoring plan (FEMP) assesses effluent monitoring systems and evaluates whether these systems are adequate to ensure the public health and safety as specified in applicable federal, state, and local requirements.

This FEMP ensures long term integrity of the effluent monitoring systems by requiring an update whenever a new process or operation introduces new hazardous materials or significant radioactive materials. This document should be reviewed annually and updated as necessary.

CONTENTS

1.0 INTRODUCTION 1-4
- 1.1 POLICY 1-4
- 1.2 PURPOSE 1-4
- 1.3 SCOPE 1-4
- 1.4 DISCUSSION 1-4

2.0 FACILITY DESCRIPTION 2-4
- 2.1 BRIEF FACILITY PHYSICAL AND PROCESS DESCRIPTION 2-4
  - 2.1.1 Double-Shell Tanks 2-4
  - 2.1.2 Single-Shell Tanks 2-4
  - 2.1.3 Double-Contained Receiver Tanks 2-4
- 2.2 IDENTIFICATION AND CHARACTERIZATION OF POTENTIAL SOURCE TERMS 2-4

3.0 APPLICABLE REGULATIONS 3-4
- 3.1 U.S. DEPARTMENT OF ENERGY ORDERS 3-4
- 3.2 FEDERAL REGULATIONS 3-4
  - 3.2.1 National Emission Standards for Hazardous Air Pollutants (40 CFR 61, Subpart H) 3-4
  - 3.2.2 State Operating Permit Program (40 CFR 70) 3-4
  - 3.2.3 Identification and Listing of Hazardous Waste (40 CFR 261) 3-4
  - 3.2.4 Designation, Reportable Quantities, and Notification (40 CFR 302) 3-4
- 3.3 INDUSTRY STANDARDS UNDER AMERICAN NATIONAL STANDARDS INSTITUTE 3-4
  - 3.3.1 Guide to Sampling Airborne Radioactive Materials in Nuclear Facilities (ANSI N13.1) 3-4
  - 3.3.2 Specification and Performance of Onsite Instrumentation for Continuously Monitoring Radioactivity in Effluents (ANSI N42.18) 3-4
- 3.4 WASHINGTON SATE REGULATIONS 3-4
  - 3.4.1 General Regulations for Air Pollution Sources (WAC 173-400) 3-4
  - 3.4.2 Air Operating Permit Program (WAC 173-401) 3-4
  - 3.4.3 Control for New Sources of Toxic Air Pollutants (WAC 173-460) 3-4
  - 3.4.4 Ambient Air Quality Standards and Emission Limits for Radionuclides (WAC 173-480) 3-4
  - 3.4.5 Radiation Protection – Air Emissions (WAC 246-247) 3-4
  - 3.4.6 Water Quality Standards for Groundwater (WAC 173-200) 3-4
  - 3.4.7 State Waste Discharge Permit Program (WAC 173-216) 3-4
  - 3.4.8 Dangerous Waste Regulations (WAC 173-303) 3-4
- 3.5 LOCAL REGULATIONS 3-4

4.0 IDENTIFICATION AND CHARACTERIZATION OF EFFLUENT STREAMS 4-4
- 4.1 IDENTIFICATION AND CHARACTERIZATION OF SOURCE TERMS CONTRIBUTING TO EACH EFFLUENT STREAM 4-4

5.0 EFFLUENT POINT OF DISCHARGE DESCRIPTION 5-4
5.1 STACK 296-A-42; 241-AY/AZ TANK FARM EXHAUSTER 5-4
5.2 STACKS 296-A-44 AND 296-A-45; 241-AN TANK FARM EXHAUSTER ... 5-4
5.3 STACKS 296-A-46 AND 296-A-47; 241-AW TANK FARM EXHAUSTERS 5-4
5.4 STACK 296-P-43, 500 FT^3/MIN PORTABLE EXHAUSTER, POR04/SKID B5-4
5.5 STACK 296-P-44, 500 FT^3/MIN PORTABLE EXHAUSTER, POR05/SKID C5-4
5.6 STACK 296-P-45, 500 FT^3/MIN PORTABLE EXHAUSTER, POR06/SKID D5-4
5.7 STACK 296-P-47, 1,000 FT^3/MIN PORTABLE EXHAUSTER, POR-008 5-4
5.8 STACK 296-P-48, 500 FT^3/MIN PORTABLE EXHAUSTER, POR03 5-4
5.9 STACK 296-B-28, 244-BX DOUBLE-CONTAINED RECEIVER TANK 5-4
5.10 STACK 296-S-22, 244-S DOUBLE-CONTAINED RECEIVER TANK EXHAUSTER 5-4
5.11 STACK 296-T-18, 244-TX DOUBLE-CONTAINED RECEIVER TANK EXHAUSTER 5-4

6.0 EFFLUENT MONITORING/SAMPLING SYSTEM DESIGN CRITERIA 6-4
6.1 EXISTING SOURCES 6-4
6.1.1 Flow-Rate Measurement 6-4
6.1.2 Radionuclides Measurement 6-4
6.2 NEW SOURCES 6-4
6.2.1 Flow-Rate Measurements 6-4
6.2.2 Radionuclides Measurement 6-4

7.0 CHARACTERIZATION OF EFFLUENT MONITORING SYSTEMS 7-4
7.1 STACK SPECIFIC EFFLUENT MONITORING DESIGN DESCRIPTIONS .. 7-4
7.1.1 Stack 296-A-42; 241-AY/AZ Tank Farm Exhauster 7-4
7.1.2 Stacks 296-A-44 and 296-A-45 for 241-AN Tank Farm Exhausters; Stacks 296-A-46 and 296-A-47 for 241-AW Tank Farm Exhausters 7-4
7.1.3 Stack 296-P-43, 296-P-44, 296-P-45, and 296-P-48 Portable Exhausters7-4
7.1.4 Stack 296-B-28, 296-S-22, and 296-T-18 Exhauster 7-4
7.2 GENERAL SYSTEM DISCUSSION 7-4
7.2.1 The Record Sampler 7-4
7.2.2 CAM Alarm Set-Points 7-4

8.0 SAMPLE ANALYSIS 8-4
8.1 SAMPLE HANDLING AND ANALYSIS 8-4
8.1.1 Sample Exchange 8-4
8.2 SAMPLE ANALYSIS 8-4
8.2.1 Laboratory Analysis 8-4
8.3 U.S. DEPARTMENT OF ENERGY ANALYTICAL AND LABORATORY GUIDELINES 8-4
8.4 DATA COLLECTION AND REVIEW 8-4

9.0 NOTIFICATION AND REPORTING REQUIREMENTS 9-4

10.0 INTERFACE WITH NEAR-FACILITY MONITORING 10-4
10.1 PURPOSE 10-4

10.2 MEDIA SAMPLED 10-4
10.3 COMMUNICATION 10-4

11.0 QUALITY ASSURANCE 11-4
11.1 OBJECTIVE 11-4
11.2 REQUIREMENTS 11-4

12.0 INTERNAL AND EXTERNAL PLAN REVIEW 12-4

13.0 REFERENCES 13-4

TABLES

Table 1-1. Tank Farms Major Stacks 1-4

Table 2-1. Double-Shell Tank Farm Summary 2-4

Table 2-2. Portable Exhausters Available for SST Waste Retrieval 2-4

Table 2-3. Single-Shell Tank List 2-4

Table 2-4. Double-Contained Receiver Tank Summary 2-4

Table 3-1. Regulatory Requirements Matrix 3-4

Table 7-1. Stack Sampling system Collection Efficiencies 7-4

Table 7-2. 3,000 Counts Per Minute Alarm Set-Point Meaning in 7-4

Table 7-3. CAM Response Time vs. Detection Concentration 7-4

Table 7-4. Summary of Emission Levels for AMS-4 CAM Alarm 7-4

Table 8-1. Effluent Sampling Electronic Data Processing (EDP) Codes 8-4

Table 8-2. Minimum Quantifiable Concentrations for Specific Radionuclides 8-4

Table 8-3. Data Analyses and Statistical Treatment 8-4

LIST OF TERMS

ABCASH	automated bar coding of air samples at Hanford
AOP	air operating permit
ANSI	American National Standards Institute
ASP	alarm set-points
BBI	best-basis inventory
BED	building emergency director
CAM	continuous air monitor
CERCLA	*Comprehensive Environmental Response, Compensation, and Liability Act of 1980*
CFR	*Code of Federal Regulations*
cpm	counts per minute
DCRT	double-contained receiver tank
DOE	U.S. Department of Energy
dpm	disintegrations per minute
RL	U.S. Department of Energy, Richland Operations Office
DST	double shell tank
Ecology	State of Washington, Department of Ecology
EDE	effective dose equivalent
EDP	electronic data processing
EMP	environmental monitoring plan
EPA	U.S. Environmental Protection Agency
FEMP	facility effluent monitoring plan
HEPA	high-efficiency particulate air
LED	light-emitting diode
MDC	minimum detection concentration
MEI	maximum exposed individual
NESHAP	National Emission Standards for Hazardous Air Pollutants
NPDES	National Pollutant Discharge Elimination System
PFP	Plutonium Finishing Plant
PNNL	Pacific Northwest National Laboratory
QA	Quality Assurance
QAPP	quality assurance project plan
RCRA	Resource Conservation and Recovery Act of 1976
RQ	Reportable Quantity
SST	single-shell tank
TCD	Tank Characterization Database
TEDE	total effective dose equivalent
TWINS2	Tank Waste Information Network System 2
WAC	Washington Administrative Code
WDOH	Washington State Department of Health
WHC	Westinghouse Hanford Company
WSCF	Waste Sampling and Characterization Facility

Units

Ci	curies
ft	feet
gal	gallon(s)
hr	hour(s)
in	inch(es)
min	minute(s)
mrem	millirem(s)
ml	milliliter(s)

DEFINITIONS

Administrative Control Values. Contractor-imposed radionuclides and hazardous material release limits usually based upon as low as reasonably achievable goals for protection of the public.

Crib. Subsurface liquid waste disposal system that allows liquid waste to percolate into surrounding soil.

Dangerous Waste. Washington State designation for solid wastes specified in *Washington Administrative Code* (WAC) 173-303-070 through 173-303-103.

Discharge Point or Effluent Discharge Point. The point at which an effluent or discharge enters the environment from the facility in which it was generated.

Effective Dose Equivalent (EDE). The summation of the products of the dose equivalent received by specified tissues of the body and a tissue-specific weighting factor. This sum is a risk-equivalent value and can be used to estimate the health-effects risk of the exposed individual. The tissue-specific weighting factor represents the fraction of the total health risk resulting from uniform whole-body irradiation that would be contributed by that particular tissue. EDE includes the committed EDE from internal deposition of radionuclides and the EDE due to penetrating radiation from sources external to the body. EDE is expressed in units of rem (or sievert).

Effluent. Any treated or untreated air emission or liquid discharge at a DOE site or from a DOE facility.

Effluent Monitoring. Measurement of liquid and gaseous effluents for the purpose of characterizing and quantifying contaminants, assessing radiation exposures of members of the public, providing a means to monitor and/or control effluents at or near the point of discharge, and demonstrating compliance with applicable standards and permit requirements.

Effluent Sampling. The continuous or intermittent collection and analysis of effluent samples for the purpose of characterizing and quantifying contaminants, assessing radiation exposures of members of the public, providing a means to control effluents at or near the point of discharge, and demonstrating compliance with applicable standards and permit requirements.

Environmental Control Limits. Limits based on permit limits and onsite policies as derived from DOE requirements.

Environmental Occurrence. Any sudden or sustained deviation (categorized as emergencies, unusual occurrences, or off-normal occurrences) from a regulated or planned performance at a DOE operation that has environmental protection and compliance significance. Typical occurrences of interest to this document include failure of primary or secondary facility effluent monitoring equipment or a monitored/unmonitored release of regulated materials exceeding administrative control values.

Environmental Surveillance. The collection and analysis of samples or direct measurements of air, water, soil, foodstuffs, biota, and other media from DOE sites and their environs for the purpose of determining compliance with applicable standards and permit requirements, assessing radiation exposures of members of the public, and assessing the effects, if any, on the local environment.

Hazardous Substance or Material. Solid, liquid, or gaseous material as defined by the following regulations:

- Any *Comprehensive Environmental Response, Compensation, and Liability Act of 1980* (CERCLA) hazardous substance identified in Title 40 *Code of Federal Regulations* (CFR) 302.4
- Any *Superfund Amendments and Reauthorization Act of 1986* extremely hazardous substance identified in 40 CFR 355, Appendix A
- Any dangerous waste regulated pursuant to WAC 173-303, "Dangerous Waste Regulations."

Hazardous Waste. Solid wastes designated by 40 CFR 261, and regulated as hazardous wastes by the U.S. Environmental Protection Agency (EPA) or WAC 173-303. This term includes dangerous waste, extremely hazardous wastes, and toxic dangerous waste.

In-line Monitor. A system in which a detector or other measuring device is placed in the effluent stream for performing measurements on the effluent stream.

Inventory at Risk. The quantity and/or type of radioactive and/or nonradioactive hazardous material present in a facility with the potential to enter a gaseous or liquid effluent stream.

Mixed Waste. Waste containing both radioactive and hazardous components regulated by the *Atomic Energy Act of 1954* and the *Resource Conservation and Recovery Act of 1976* (RCRA), respectively.

Noncomplexed. Waste that does not contain the chelating agents ethylenediaminetetraacetic acid, hydroxyethylethylenediaminetriacetic acid, citric acid, or hydroxyacetic acid.

Normal Operations. A plant operating condition where all processes and safety control devices are operating as designed.

Occurrence Report. A written evaluation of an event or condition that is prepared in sufficient detail to enable the reader to assess its significance, consequences, or implications and to evaluate the actions being proposed or employed to correct the condition or to avoid recurrence.

Primary Environmental Monitors. Monitoring equipment legally required to monitor ongoing discharges. In general, this term applies to monitors closest to the point of discharge which are used to determine if discharges are within specified limits.

Radioactive Component. Refers to the radionuclides portion of a waste substance.

Releases. Any spilling, leaking, pumping, pouring, emitting, emptying, discharging, injecting, escaping, leaching, dumping, or otherwise disposing of substances into the environment. This includes abandoning/discarding any type of receptacle containing substances or the stockpiling of a reportable quantity (RQ) of a hazardous substance in an unenclosed containment structure.

Reportable Quantities. That quantity of hazardous substances as listed in 40 CFR 302 that, if released, requires notification as per 40 CFR 302. These quantities also provide a criteria for requiring FEMPs with respect to nonradioactive hazardous substances.

Riser. A pipe connected to the top of an underground storage tank or waste pipeline and extended to the surface of the ground. Pumps and instruments are inserted into a waste tank or pipe through a riser.

Secondary Environmental Monitors. Environmental monitoring equipment or activities that, if degraded, will produce a more than minor disruption of a monitoring program. An example of a minor effect would be the failure of a unit whose place in the program effectively is duplicated by overlap between one or more components.

Shutdown Condition. A condition where all processes involving radioactive and/or hazardous materials are inactive and otherwise stable.

Source Term. The amount, activity, or concentration and the effective release height of a hazardous or radioactive material in a facility effluent stream at the point of discharge that is available for exposure to personnel either within the facility or beyond the site boundary.

Statistically Significant Increase. When used in reference to a continuous release of a hazardous substance listed in 40 CFR 302.4, this term refers to the largest 5 percent of all continuous releases. Determination of statistical significance is based on any of the following:

- Non-parametric statistical test
- Control chart or student test
- Other tests that have equivalent sensitivity to (a) or (b).

Tank Farm. An area of underground tanks designed to store high-level liquid wastes generated by the reprocessing of nuclear fuel.

Toxic Dangerous Wastes. Designation for waste meeting the criteria specified in WAC 173-303-101.

Transuranic. Any radionuclide having an atomic number greater than 92.

Underground Injection. Subsurface emplacement of fluids through a bored, drilled, or driven well, or through a drywell where the depth of the drywell is greater than the largest surface dimension.

Upset Condition. Any one condition that is outside the normal process operating parameters, or an unusual operating condition where one material confinement/containment barrier or engineered or administrative control has failed.

1.0 INTRODUCTION

The *U.S. Department of Energy Organization Act of 1977* and the *Atomic Energy Act of 1954*, as amended, provide for the protection of the health and safety of the public and the environment. This document is prepared to meet DOE Order 450.1 requirements that specify environmental monitoring for each site, facility, or process that uses, generates, releases, or manages significant pollutants of radioactive or hazardous materials that could affect public and personnel safety and the environment.

This FEMP is part of the larger "Hanford Site Environmental Monitoring Plan" (DOE/RL-91-50), specifically intended to meet this requirement for the tank farm facility. The two major components of an Environmental Monitoring Program (EMP) consist of a FEMP and an environmental surveillance plan. CH2M HILL Hanford Group, Inc. (CH2M HILL) has the responsibility for preparation of the FEMP at the tank farm facility, and provides information on effluent characteristics and the effluent monitoring systems, radioactive and hazardous material source terms related to specific effluent streams, and discharge points.

1.1 POLICY

It is the policy of the DOE and CH2M HILL to conduct effluent monitoring to determine whether the public and the environment are adequately protected during DOE operations and whether operations are in compliance with DOE and other applicable federal, state, and local emission standards and requirements. It is also the policy of the DOE and CH2M HILL that effluent monitoring programs meet high standards of quality and credibility and comply with federal, state, and local emission standards and requirements.

1.2 PURPOSE

The purpose of this FEMP is to assess the magnitude of routine and potential liquid and airborne effluent releases from the Tank Farm Facility to determine the compliance of effluent monitoring systems and sampling programs with respect to applicable federal, state, and local regulations.

1.3 SCOPE

The scope of this document includes information for monitoring and characterizing radioactive and nonradioactive hazardous materials discharged in tank farm facility effluents. This FEMP includes documentation for both gaseous and liquid effluent monitoring systems that monitor radioactive and nonradioactive hazardous pollutants that could be discharged to the environment under routine and/or upset conditions. This documentation is provided for each facility that uses, generates, releases, or manages significant quantities of radioactive and nonradioactive hazardous materials that could impact public and employee safety and the environment. This FEMP describes the airborne and liquid effluent paths and the associated sampling and monitoring systems of the tank farm facility and provides sufficient information on the effluent

characteristics and the effluent monitoring systems so that a compliance assessment against requirements could be performed. Adequate details are supplied so that radioactive and hazardous material source terms could be related to specific effluent streams that are, in turn, related to discharge points and finally, compared to the effluent monitoring system capability. Details are provided only for those streams previously determined to require a FEMP.

1.4 DISCUSSION

The characterization of the radioactive and nonradioactive hazardous constituents in each effluent stream provides the underlying rationale for the sampling and monitoring programs. The method of characterization discussed in this FEMP identifies potential pollutants at the point of generation and tracks the hazardous constituents in effluent streams to the point of discharge.

Emission points are included in this FEMP if any of the following criteria are met:

- the total projected dose from radionuclides exceeds 0.1 millirem (mrem) per year EDE from any one discharge point;
- if any one regulated material discharged over a 24-hour period from a facility exceeds 100 percent of a RQ as listed in 40 CFR 302.4;
- a liquid effluent is discharged to the Columbia River and contains radionuclides that would cause any person consuming that effluent to receive an EDE greater than 4.0 mrem exposure annually.

DOE guidance also suggests that a FEMP evaluation should consider anticipated facility upset conditions.

There are no liquid discharges from Tank Farm facilities which fall under the criteria which would require documentation in a FEMP. Table 1-1 identifies the stacks included in this FEMP.

Table 1-1. Tank Farms Major Stacks

Stack	Facility
296-A-42	241-AY/AZ Tank Exhauster - 702-AZ
296-A-44	241-AN Tank Farm Exhauster - W314
296-A-45	241-AN Tank Farm Exhauster - W314
296-A-46	241-AW Tank Farm Exhauster - W314
296-A-47	241-AW Tank Farm Exhauster - W314
296-B-28	244-BX Double Contained Receiver Tank Exhauster
296-P-43	Portable Exhauster POR04 - 500CFM
296-P-44	Portable Exhauster POR05 - 500CFM
296-P-45	Portable Exhauster POR06 - 500CFM
296-P-47	Portable Exhauster POR08 - 1000CFM
296-P-48	Portable Exhauster POR03 - 500CFM
296-S-22	244-S Double-Contained Receiver Tank Exhauster
296-T-18	244-TX Double-Contained Receiver Tank Exhauster

2.0 FACILITY DESCRIPTION

In 1943, the federal government selected the Hanford Site as part of the Manhattan Project to produce plutonium for national defense needs. Metallic uranium fuel was irradiated in nuclear reactors at the Hanford Site to produce plutonium. Chemical processing separated the plutonium from the other elements in the irradiated fuel. The separated plutonium was in the form of plutonium nitrate, which was initially shipped offsite for further processing to produce the metallic form used in nuclear weapons. A variety of liquid wastes were generated in these processes which included hazardous components regulated under RCRA and as by-product material regulated under the *Atomic Energy Act of 1954*. These wastes were transported, treated, and stored in the tank farm facilities. Currently, Tank Farms operations include the safe storage of these wastes. Further activities are underway for retrieval and ultimate disposal of these wastes.

The tank farm facilities are located in the 200 East and West areas of the Hanford Site. Tank Farms include a total of 149 single-shell tanks (SST) and 28 double-shell tanks (DST) along with various transfer and receiving facilities. These facilities were constructed to various designs from 1943 to 1986. East area SST farms include A, AX, B, BX, BY, and C farms. East area DST farms include AN, AW, AP, AY and AZ farms. The West area SST farms include S, SX, T, TX, TY, and U farms. SY Tank Farm is the only DST farm in West area. Double-contained receiver tanks (DCRT) are among the transfer and receiving facilities. In the East area this is the 244-BX DCRT. In the West area they are the 244-S and 244-TX DCRTs.

As part of the normal operation of some of the tank farm facilities, effluents are generated and, in some cases, released. Primary effluents from the tank farm facilities include air emissions. These effluents are regulated via a variety of regulations which are discussed further in Section 3.

Brief descriptions of the physical characteristics of Tank Farm facilities, the primary processes, and information with respect to potential process source terms are provided below.

2.1 BRIEF FACILITY PHYSICAL AND PROCESS DESCRIPTION

2.1.1 Double-Shell Tanks

DSTs were fabricated as two concentric tanks surrounded by a concrete shell. Waste is stored in the free standing primary tank which is 22.9 m (75 ft) in diameter and 14.2 m (46.8 ft) high at the crown. The primary tank sits on a concrete pad. The secondary tank is 1.5 m (5 ft) larger in diameter than the primary tank which creates a surrounding space called the annulus. The secondary tank sits on a concrete pad. The completely enclosed annulus serves as a containment barrier in case the primary tank leaks. The annulus is ventilated and continually monitored for evidence of primary tank leakage. The concrete shell encloses the sides of both primary and

secondary tanks for additional containment, radiation shielding, and structural support. The primary tank is also ventilated to remove heat from the waste and to control and contain particulate emissions. Wastes stored in the DSTs are from the following facilities/areas:

- PUREX Plant
- Plutonium Finishing Plant (PFP)
- B Plant
- T Plant
- 222-S Laboratory
- 100 Areas
- 300 Area
- 400 Area
- SSTs

As discussed above there are 6 DST farms – AN, AP, AW, AY, AZ, and SY. Table 2-1 summarizes the various DST farms in regard to its associated primary ventilation stack numbers, the tank numbers in the specific farms, the tank capacities, and the approximate operation dates of the tanks.

Table 2-1. Double-Shell Tank Farm Summary

Primary Tank Exhauster Stack Number	Tank Farm	Tank Number	Tank Capacity (gal)	Approximate Dates Facilities Became Operational	Facility Location
296-A-29 - being replaced with 296-A-44 and 296-A-45	AN	241-AN-101	1,160,000	Sep-81	200 East Area
		241-AN-102			
		241-AN-103			
		241-AN-104			
		241-AN-105			
		241-AN-106			
		241-AN-107			
296-A-40	AP	241-AP-101	1,160,000	Oct-86	200 East Area
		241-AP-102			
		241-AP-103			
		241-AP-104			
		241-AP-105			
		241-AP-106			
		241-AP-107			
		241-AP-108			
296-A-27 - being replaced with 296-A-46 and 296-A-47	AW	241-AW-101	1,160,000	Aug-80	200 East Area
		241-AW-102			
		241-AW-103			
		241-AW-104			
		241-AW-105			
		241-AW-106			
296-A-42	AY	241-AY-101	1,000,000	Jul-71	200 East Area

Primary Tank Exhauster Stack Number	Tank Farm	Tank Number	Tank Capacity (gal)	Approximate Dates Facilities Became Operational	Facility Location
		241-AY-102		Apr-76	
	AZ	241-AZ-101	1,000,000	Nov-76	200 East Area
		241-AZ-102			
296-P-23 and 296-S-25	SY	241-SY-101	1,160,000	Apr-77	200 West Area
		241-SY-102			
		241-SY-103			

2.1.2 Single-Shell Tanks

SSTs were the first tanks built to receive process waste from the other Hanford facilities. The volume capacity of each SST varies from 55,000 to 1 million gallons. All but the 55,000 gallon capacity tanks are 75 ft in diameter. These tanks range in height from 29.75 to 54 ft high (at their highest points), with capacities from 500,000 to 1 million gallons. The smaller 55,000 gallon tanks are 20 ft in diameter and 25.5 ft high. Table 2-3 provides a summary of the SST identification numbers, tank capacities, and approximate dates the tanks were removed from service.

No new wastes have been added to the SST farms since 1981. Current activities support waste retrieval and ultimate closure of the SST systems. Waste from these tanks will be retrieved using one of the available portable exhausters with stack numbers identified in Table 2-2.

Table 2-2. Portable Exhausters Available for SST Waste Retrieval

Stack	Facility
296-P-43	Portable Exhauster POR04 – 500 ft^3/min
296-P-44	Portable Exhauster POR05 – 500 ft^3/min
296-P-45	Portable Exhauster POR06 – 500 ft^3/min
296-P-47	Portable Exhauster POR08 – 1,000 ft^3/min
296-P-48	Portable Exhauster POR03 – 500 ft^3/min

Table 2-3. Single-Shell Tank List

East Area SSTs			West Area SSTs		
Number	Year Removed From Service	Tank Capacity (gallons)	Number	Year Removed From Service	Tank Capacity (gallons)
241-A-101	1980	1,000,000	241-S-101	1980	750,000
241-A-102	1980	1,000,000	241-S-102	1980	750,000
241-A-103	1980	1,000,000	241-S-103	1980	750,000
241-A-104	1975	1,000,000	241-S-104	1968	750,000
241-A-105	1963	1,000,000	241-S-105	1974	750,000
241-A-106	1980	1,000,000	241-S-106	1979	750,000
241-AX-101	1980	1,000,000	241-S-107	1980	750,000
241-AX-102	1980	1,000,000	241-S-108	1979	750,000
241-AX-103	1980	1,000,000	241-S-109	1979	750,000
241-AX-104	1978	1,000,000	241-S-110	1979	750,000
241-B-101	1974	500,000	241-S-111	1972	750,000
241-B-102	1978	500,000	241-S-112	1974	750,000
241-B-103	1977	500,000	241-SX-101	1980	1,000,000
241-B-104	1972	500,000	241-SX-102	1980	1,000,000
241-B-105	1972	500,000	241-SX-103	1980	1,000,000
241-B-106	1977	500,000	241-SX-104	1980	1,000,000
241-B-107	1969	500,000	241-SX-105	1980	1,000,000
241-B-108	1977	500,000	241-SX-106	1980	1,000,000
241-B-109	1977	500,000	241-SX-107	1964	1,000,000
241-B-110	1971	500,000	241-SX-108	1962	1,000,000
241-B-111	1976	500,000	241-SX-109	1965	1,000,000
241-B-112	1977	500,000	241-SX-110	1976	1,000,000
241-B-201	1971	55,000	241-SX-111	1974	1,000,000
241-B-202	1977	55,000	241-SX-112	1969	1,000,000
241-B-203	1977	55,000	241-SX-113	1958	1,000,000
241-B-204	1977	55,000	241-SX-114	1972	1,000,000
241-BX-101	1972	500,000	241-SX-115	1965	1,000,000
241-BX-102	1971	500,000	241-T-101	1979	500,000
241-BX-103	1977	500,000	241-T-102	1976	500,000
241-BX-104	1980	500,000	241-T-103	1974	500,000
241-BX-105	1980	500,000	241-T-104	1974	500,000
241-BX-106	1971	500,000	241-T-105	1976	500,000
241-BX-107	1977	500,000	241-T-106	1973	500,000
241-BX-108	1974	500,000	241-T-107	1976	500,000
241-BX-109	1974	500,000	241-T-108	1974	500,000
241-BX-110	1977	500,000	241-T-109	1974	500,000
241-BX-111	1977	500,000	241-T-110	1976	500,000
241-BX-112	1977	500,000	241-T-111	1974	500,000
241-BY-101	1971	750,000	241-T-112	1977	500,000
241-BY-102	1977	750,000	241-T-201	1976	55,000
241-BY-103	1973	750,000	241-T-202	1976	55,000

East Area SSTs				West Area SSTs		
Number	Year Removed From Service	Tank Capacity (gallons)		Number	Year Removed From Service	Tank Capacity (gallons)
241-BY-104	1977	750,000		241-T-203	1976	55,000
241-BY-105	1974	750,000		241-T-204	1976	55,000
241-BY-106	1977	750,000		241-TX-101	1980	750,000
241-BY-107	1974	750,000		241-TX-102	1977	750,000
241-BY-108	1972	750,000		241-TX-103	1980	750,000
241-BY-109	1979	750,000		241-TX-104	1977	750,000
241-BY-110	1979	750,000		241-TX-105	1977	750,000
241-BY-111	1977	750,000		241-TX-106	1977	750,000
241-BY-112	1978	750,000		241-TX-107	1977	750,000
241-C-101	1970	500,000		241-TX-108	1977	750,000
241-C-102	1976	500,000		241-TX-109	1977	750,000
241-C-103	1979	500,000		241-TX-110	1977	750,000
241-C-104	1980	500,000		241-TX-111	1977	750,000
241-C-105	1979	500,000		241-TX-112	1974	750,000
241-C-106	1979	5000,000		241-TX-113	1971	750,000
241-C-107	1978	500,000		241-TX-114	1971	750,000
241-C-108	1976	500,000		241-TX-115	1977	750,000
241-C-109	1976	500,000		241-TX-116	1969	750,000
241-C-110	1976	500,000		241-TX-117	1969	750,000
241-C-111	1978	500,000		241-TX-118	1980	750,000
241-C-112	1976	500,000		241-TY-101	1973	750,000
241-C-201	1977	55,000		241-TY-102	1979	750,000
241-C-202	1977	55,000		241-TY-103	1973	750,000
241-C-203	1977	55,000		241-TY-104	1974	750,000
241-C-204	1977	55,000		241-TY-105	1980	750,000
				241-TY-106	1959	750,000
				241-U-101	1960	500,000
				241-U-102	1979	500,000
				241-U-103	1978	500,000
				241-U-104	1951	500,000
				241-U-105	1978	500,000
				241-U-106	1977	500,000
				241-U-107	1980	500,000
				241-U-108	1979	500,000
				241-U-109	1978	500,000
				241-U-110	1975	500,000
				241-U-111	1980	500,000
				241-U-112	1970	500,000
				241-U-201	1977	55,000
				241-U-202	1977	55,000
				241-U-203	1977	55,000
				241-U-204	1977	55,000

2.1.3 Double-Contained Receiver Tanks

DCRTs are transfer and routing facilities used primarily for transfer and storage of waste on its way to other tank farms. Structurally, DCRTs are comprised of a primary tank surrounded by a secondary containment vessel called a tank vault, with access ports on top for pumping, instrumentation, ventilation, and piping. The primary tank is located within the tank vault, separated by an annular space. The primary tank contains aqueous radioactive wastes. The bottom of the tank vault is sloped to a sump for leak collection and detection. The tank vault is designed to contain leakage from a failure of the primary tank. Currently active DCRTs discussed in this FEMP include the 244-BX DCRT, the 244-S DCRT, and the 244-TX DCRT. Table 2-4 provides pertinent information associated with these DCRTs such as tank capacities, operation start dates, etc.

Table 2-4. Double-Contained Receiver Tank Summary

Associated Stack Number	Facility	Capacity (gallons)	Location	Operation Date
296-B-28	244-BX	31,000	200 East Area	1983
296-S-22	244-S	31,000	200 West Area	1975
296-T-18	244-TX	20,000	200 West Area	1981

244-BX - The 244-BX DCRT is located just inside the BX/BY tank farm complex. This DCRT is similar in design to 244-TX and 244-U. The 244-BX DCRT consists of a horizontal, cylindrical, carbon steel 95,000 liter tank surrounded by a reinforced concrete vault. The vault floor and walls are painted with a protective paint. The 296-B-28 stack system ventilates the 244-BX catch station tank and annulus. The 244-BX DCRT is used to pump salt-well waste from SSTs in the 241-B, 241-BX and 241-BY tank farms to DST farms in the 200 East area.

244-S - The 244-S DCRT is located just east of the 241-S Tank Farm. This DCRT is similar in design to 244-A. The 296-S-22 stack system ventilates the 244-S catch station tank and annulus. The 244-S catch station is used to transfer liquid waste from 241-S and 241-SX saltwells to the 241-SY tank farm. The 244-S catch station started operation in 1975.

244-TX - The 244-TX DCRT is located within TY Tank Farm. This DCRT is the same as 244-BX except that the vault is lined on the floor and walls to a height of 5 ft with carbon steel. Above that, the walls are covered with a protective paint. The 296-T-18 stack system ventilates the 244-TX DCRT and annulus. The 244-TX DCRT is used to transfer liquid waste from the PFP and from SSTs in the 241-T, 241-TX, and 241-TY tank farms to the 241-SY tank farm.

2.2 IDENTIFICATION AND CHARACTERIZATION OF POTENTIAL SOURCE TERMS

Tank-specific and global inventories for each of the 149 single-shell and 28 DSTs (including Aging Waste Tank) have been downloaded into the Tank Characterization Database (TCD) and are available and accessible over the internet through the Tank Waste Information Network System 2 (TWINS2) interface at the following internet address:

http://twins.pnl.gov:8001/TCD/main.html.

This information comes from best-basis inventories (BBI) for 26 chemicals and 46 radionuclides, which were completed August 29, 1997, in accordance with Defense Nuclear Facilities Safety Board, Milestone 5.6.3.1.f, "Provide Standard Inventories for all Tanks." The BBIs and the methodology used to generate the estimates are contained in over 5,000 pages of text. The TCD contains a best-basis summary table that presents the chemical mass and radionuclide activity in a tabular format with the analytes along the left margin and the individual tanks across the top. A column listing the global inventories is located at the end of the summary table. The global inventories were determined independently by analyzing essential material purchase invoices, chemical use records, and other historical information.

The BBIs are updated at least annually (more frequently if necessary) to reflect new information collected through sampling, reconciliation efforts, and other planned activities. Changes to the BBIs are administered through a formal change board and be documented in change logs to ensure proper configuration control.

The TWINS2 interface provides a quick and convenient mechanism for accessing Hanford Site databases containing tank waste information. The interface retrieves information from the databases and presents it in a Microsoft Excel format. The TWINS2 interface is organized by subject areas and table names. Detailed step-by-step instructions for accessing various data sources, including the BBIs, are provided in the introduction page of the TWINS2 user's guide.

3.0 APPLICABLE REGULATIONS

Conditions and requirements for monitoring existing or potential releases of radioactive and other chemicals to the environment are contained in DOE Orders and federal, state, and local laws, regulations, and permits. Table 3-1 gives a brief summary of the regulations and standards applicable to this FEMP. Because the regulations enforced by these agencies can differ, CH2M HILL may enforce more restrictive requirements as a matter of policy.

3.1 U.S. DEPARTMENT OF ENERGY ORDERS

FEMPs are completed and implemented to meet the overall radioactive and nonradioactive monitoring requirements of DOE Order 5400.5 and DOE/EH-0173T. Prior to January 2003, DOE Order 5400.1 was the basis for FEMPs, but it has been replaced by DOE Order 450.1, which does not specifically require a site wide EMP or a FEMP. DOE Order 450.1 requires that environmental monitoring be conducted, as appropriate, to detect and characterize releases from DOE activities; assess impacts; estimate the dispersal patterns in the environment; characterize pathways of exposure to members of the public; and characterize the exposures and doses to individuals and to the population; and to evaluate the potential impacts to the biota in the vicinity of the DOE activity. DOE Order 450.1 also requires that Integrated Safety Management Systems include an environmental management system that provides for the systematic planning, integrated execution, and evaluation of programs for public health and environmental protection; pollution prevention, and compliance with applicable environmental protection requirements. The site EMP and FEMPs are being used, in part, as the vehicles to satisfy applicable portions of DOE Order 450.1. The plan must include the rationale and design criteria for the monitoring program, as well as describe the extent and frequency of the monitoring analysis. The plan also must contain quality assurance (QA) requirements, program implementation procedures, directions for preparation and implementation of reports, and directions for identification and discussion of effluent monitoring and environmental surveillance.

The effluent monitoring portion of the plan must verify compliance with applicable regulations and DOE Orders. The plan also should evaluate the effectiveness of treatment; identify potential environmental problems; evaluate the need from remedial action or mitigation measures; support permit revision and/or re-issuance; and detect, characterize, and report unplanned releases.

DOE Order 5400.5, *Radiation Protection of the Public and the Environment*, requires a monitoring plan that implements the requirements of DOE Order 450.1. Compliance with the requirements of DOE Order 5400.5 could be demonstrated based on calculations from monitoring and surveillance programs.

DOE Order 435.1, *Radioactive Waste Management*, establishes policies, guidelines, and minimum requirements by which the DOE manages radioactive and mixed waste and contaminated facilities.

3.2 FEDERAL REGULATIONS

Federal regulations applicable to this FEMP are discussed in the following sections.

3.2.1 National Emission Standards for Hazardous Air Pollutants (40 CFR 61, Subpart H)

On December 15, 1989, 40 CFR 61, Subpart H "National Emission Standards for Emissions of Radionuclides Other Than Radon from Department of Energy Facilities" (commonly referred to as the Radionuclide NESHAP), came into effect. This regulation governs portions of the design and implementation of effluent air sampling, and establishes exposure limits and monitoring requirements for DOE facilities. The exposure limit for members of the public from radionuclide air emissions is an EDE not to exceed 10 mrem per year. Compliance with this standard is measured by calculating the highest EDE where a person resides or abides using an EPA-approved method.

Emissions of radionuclides must be measured at all release points that have a potential to discharge radionuclides into the air in quantities that could cause an EDE in excess of 1 percent of the standard. If the EDE caused by all emissions is less than 1 percent of the standard, a facility is exempt from the EPA monitoring requirements. All radionuclides that could contribute greater than 10 percent of the potential EDE for a release point are measured individually. For other release points that have a potential to release radionuclides into the air, periodic confirmatory measurements are made to verify low emissions.

To determine whether a release point is subject to emission measurement requirements, the potential for radionuclide emissions for that release point must be evaluated. In evaluating the potential of a release point to discharge radionuclides into the air, the estimated radionuclide release rates are based on the discharge of the effluent stream that would result if all pollution control equipment did not exist, but operations otherwise were normal.

40 CFR 61, Subpart H also states that effluent streams be directly monitored continuously with an in-line detector or that representative samples of the effluent stream be withdrawn continuously from the sampling site following the guidance presented in American National Standards Institute (ANSI) N13.1. The EPA also has approved an alternate method for sampling using single-point sampling with a shrouded probe. The requirements for continuous sampling are applicable to batch processes when the unit is in operation. Periodic sampling (grab samples) could be used only with prior EPA approval. Such approval could be granted in cases where continuous sampling is not practical and radionuclide emission rates are relatively constant. In such cases, grab samples will be collected with sufficient frequency to provide a representative sample of the emissions.

40 CFR 61, Subpart H was amended as published in the Federal Register dated September 9, 2002 (FR 57159), and became effective October 9, 2002. The amendment states that newly constructed major sources must sample following the guidance presented in

ANSI N13.1-1999. The amendment imposed additional inspection, testing and cleaning requirements on existing facilities still subject to the original ANSI N13.1-1969, "Guide to Sampling Airborne Radioactive Materials in Nuclear Facilities."

The new requirements for existing facilities are contained in 40 CFR 61, Appendix B, Method 114, "Test Methods for Measuring Radionuclide Emissions from Stationary Sources," in Section 4, Table 2. The Table 2 requirements are briefly listed with no additional explanatory text or referenced guidance provided by EPA. However, EPA does mention in the Federal Register notice that the additional inspection requirements are "...taken directly from ANSI N13.1." This infers that guidance regarding Method 114, Table 2 should be consistent with guidance for any of the equivalent inspections under ANSI N13.1-1999.

The DOE entered into technical discussions with EPA, Region 10 regarding clarification, interpretation and implementation of the new 40 CFR 61, Subpart H, Table 2 requirements for existing facilities. The discussions took place between February 19, 2003, and August 16, 2003, and were documented in a written summary. The meeting summary documents mutual agreement on points of compliance, clarifications of various requirements and EPA's willingness to consider written proposals requesting approval for alternate methods of compliance with Table 2 requirements for individual stacks. The summary was submitted to EPA for concurrence on September 3, 2003. EPA concurred by letter issued September 9, 2003. These new Table 2 requirements apply to the stacks listed in this FEMP.

3.2.2 State Operating Permit Program (40 CFR 70)

This regulation defines the minimum elements required by the *Federal Water Pollution Control Act of 1972* for state operating permit programs and corresponding standards and procedures by which the administrator approves, oversees, and withdraws approval of state operating permit programs.

3.2.3 Identification and Listing of Hazardous Waste (40 CFR 261)

This regulation identifies solid waste subject to regulation as a hazardous waste.

3.2.4 Designation, Reportable Quantities, and Notification (40 CFR 302)

This regulation designates hazardous substances and identifies reportable quantities and notification requirements for release of these hazardous substances under CERCLA and the *Safe Drinking Water Act of 1974*, as amended.

Any unpermitted release of any of these designated hazardous substances must be reported. Therefore, if the possibility exists for a facility to release any of the designated substances, waste streams must be monitored for their presence and monitoring practices be provided in a FEMP.

3.3 INDUSTRY STANDARDS UNDER AMERICAN NATIONAL STANDARDS INSTITUTE

Industry standards are discussed in the following sections.

3.3.1 Guide to Sampling Airborne Radioactive Materials in Nuclear Facilities (ANSI N13.1)

The primary objective for sampling airborne radioactivity in effluents is to measure the release of radioactive materials to the environment. This is accomplished through sampling prior to or near the point of release. The objective of ANSI N13.1 is to set forth the principles that apply in obtaining valid samples of airborne radioactive materials and to prescribe acceptable methods and materials for gaseous and particulate sampling. ANSI N13.1 is limited to the collection of samples and does not address measurement of the radioactive materials collected. The exclusion of radiochemical measurement from the scope must not be construed to mean that the measurement of samples is of lesser importance than sampling.

3.3.1.1 ANSI N13.1-1969, "Guide to Sampling Airborne Radioactive Materials in Nuclear Facilities"

ANSI N13.1-1969 applies to major stacks in operation prior to January 2003. This standard is more prescriptive in nature than the 1999 version. Following are some criteria from the standard:

- A sample must be representative of the bulk stream or volume from which it is taken, and with respect to physical and chemical composition.
- The sampling point should be a minimum of 5 diameters (or 5 times the major dimension for rectangular ducts) downstream from abrupt changes in flow direction or prominent transitions.
- A multiple number of withdrawal points each representing approximately equal areas based on the duct or stack dimensions is desirable.
- The velocity distribution across the duct or stack should be known in order to establish isokinetic flow and representative sample points.
- The velocity of air entering a sampling probe (or the collector when held in the air stream) should be identical to the velocity of the air stream being sampled at that point (isokinetic).
- Sampling line length should be kept to a minimum length and an evaluation should be made of deposition in these lines.

- Elbows in sampling lines should be avoided if at all possible; however, when they are required, the bend radius of the elbow should be as long as practical.

- Sensitivity and accuracy of the analytical or counting method will determine the minimum volume of air which must be sampled to obtain the requisite accuracy and precision of results.

- Appropriate filtration should be chosen for particulate sampling and sampling for radioactive gases or volatile materials.

3.3.1.2 ANSI N13.1, "Sampling and Monitoring Releases of Airborne Radioactive Substances from the Stacks and Ducts of Nuclear Facilities"

The EPA adopted ANSI N13.1 with an amendment to 40 CFR 61, Subpart H, as published in the Federal Register dated September 9, 2002. ANSI N13.1 applies to newly constructed major stacks effective January 2003. Performance-based sampling as described in ANSI N13.1 allows the use of single-point sampling such as a shrouded probe. The performance criteria for sampling nozzle placement and particle transport are described as follows:

- Angular Flow – Sampling nozzles are usually aligned with the axis of the stack. If the air travels up the stack in cyclonic fashion, the air velocity vector approaching the nozzle could be misaligned with the sampling nozzles enough to impair the extraction of particles. Consequently, the flow angle is measured in the stack at the elevation of the sampling nozzle. The average air-velocity angle must not deviate from the axis of the stack and sampling nozzle by more than 20^{0}.

- Uniform Air Velocity – It is important that the gas momentum across the stack cross section where the sample is extracted be well mixed or uniform. Consequently, the velocity is measured at several points in the stack at the elevation of the sampling nozzle. The uniformity is expressed as the variability of the measurements about the mean. This is expressed using the relative coefficient of variance, which is the standard deviation divided by the mean and expressed as a percentage. The lower the coefficient of variance value, the more uniform the velocity. The acceptance criterion is that the coefficient of variance of the air velocity must be $\leq$20 percent across the center two-thirds of the area of the stack.

- Uniform Concentration of Tracer Gases – A uniform contaminant concentration in the sampling plane enables the extraction of samples that represent the true concentration. This is first tested using a tracer gas. The fan is a good mixer, so injecting the tracer downstream of the fan provides worst-case results. Worst-case results are those that might be observed if the fan itself became contaminated and later released contaminants.

The acceptance criteria are that 1) the coefficient of value of the measured tracer gas concentration is ≤20 percent across the center two thirds of the sampling plane, and 2) at no point in the sampling plane does the concentration vary from the mean by >30 percent.

- Uniform Concentration of Tracer Particles – Uniformity in contaminant concentration at the sampling elevation is further demonstrated using tracer particles large enough to exhibit inertial effects. Particles of 10 μm aerodynamic diameter are used by default unless it is known that larger particles are present in the air stream. The acceptance criterion is that the coefficient of variance of particle concentration is ≤20 percent across the center two-thirds of the sampling plane.

Sample Extraction and Transport System Performance – The criteria are that 1) nozzle transmission ratio for a 10 μm aerodynamic diameter particle is 0.8 to 1.3; 2) nozzle aspiration ratio for a 10 μm aerodynamic diameter particle is 0.8 to 1.5; and 3) the test particle penetration through transport system is ≥50 percent for 10 μm aerodynamic diameter particles.

3.3.2 Specification and Performance of Onsite Instrumentation for Continuously Monitoring Radioactivity in Effluents (ANSI N42.18)

The objective of continuously monitoring instrumentation is to measure the quantity and/or the rate of release of radionuclides in the effluent stream and to provide useful documentation for scientific and logical purposes. This standard applies to continuous monitors that measure normal releases, detect inadvertent releases, show general trends, and annunciate radiation levels that have exceeded predetermined values. This standard specifies detection capabilities, physical operating limits, reliability, calibration requirements, and sets minimum performance requirements for effluent monitoring.

3.4 WASHINGTON SATE REGULATIONS

Applicable Washington State regulations are discussed in the following sections.

3.4.1 General Regulations for Air Pollution Sources (WAC 173-400)

The purpose of this regulation is to establish technically feasible and reasonably attainable standards and to establish rules generally applicable to the control and/or prevention of emission of air contaminants.

3.4.2 Air Operating Permit Program (WAC 173-401)

The *Federal Clean Air Act of 1970* as expanded in 1990 contains several new requirements aimed at reducing the amount of airborne pollutants. One of these requirements establishes a nationwide air operating permit (AOP) program for particular sources of air pollution. This

program was intended to consolidate all of the source's air emission conditions and limitations into a single federally enforceable, state-issued permit. Washington State implements the federal AOP program through WAC 173-401.

The State of Washington, Department of Ecology (Ecology) is the permitting authority, and as such is responsible for issuing AOPs. However, due to the complexity of operations at the Hanford Site, Ecology established agreements with the Washington State Department of Health (WDOH) for regulation of radioactive air emissions and with Benton Clean Air Authority, for regulation of asbestos and open burning. EPA, Region 10 also has a presence in the Hanford Site AOP.

The AOP was issued to the Hanford Site with an effective date of July 2, 2001.

3.4.3 Control for New Sources of Toxic Air Pollutants (WAC 173-460)

The purpose of this regulation is to establish the systematic control of new sources emitting toxic air pollutants (TAP) in order to prevent air pollution, reduce emissions to the extent reasonable possible, and maintain such levels of air quality as will protect human health and safety.

3.4.4 Ambient Air Quality Standards and Emission Limits for Radionuclides (WAC 173-480)

Although the standard for Washington State establishes a 25 mrem per year (cumulative) dose limit for public exposure to radionuclides in the ambient air, facilities must comply with the most restrictive of federal, state, or local law. Therefore, the exposure limit that must be complied with is the more restrictive 10 mrem per year (EDE) EPA standard for the air pathway given in 40 CFR 61, Subpart H . Compliance is calculated for the nearest offsite receptor in an unrestricted area where any member of the public could be located (fence boundary).

3.4.5 Radiation Protection – Air Emissions (WAC 246-247)

This regulation specifies new source review, notification, registration, and permitting requirements associated with any source of radioactive air emissions in Washington State, including those on the Hanford Site. One specific requirement listed in WAC 246-247 is the semiannual reporting of emissions from each registered stack or vent onsite. By agreement with WDOH, only annual reporting is required. Although WAC 246-247 lists maximum EDE standards less stringent than the EPA radionuclide NESHAP standard, it contains a caveat stating that more stringent federal standards take precedence over the EDE standards specified by the WAC. Therefore, it effectively endorses the 10 mrem per year EDE standard of 40 CFR 61, Subpart H, NESHAP.

3.4.6 Water Quality Standards for Groundwater (WAC 173-200)

The water quality standards to protect groundwater to the level of drinking water standards are contained in WAC 173-200, "Water Quality Standards for Groundwater of the State of Washington." These standards limit exposure to gross alpha, gross beta, H-3, SR-90, Ra-226, and -228. For radionuclides that are not listed specifically, exposures are limited by the federal standard to an EDE not to exceed 4 mrem per year.

3.4.7 State Waste Discharge Permit Program (WAC 173-216)

The purpose of this regulation is to implement a state permit program, applicable to the discharge of waste materials from industrial operations into ground and surface waters of the state. However, this regulation excludes point source discharge of pollutants into navigable waters of the state, which is regulated by WAC 173-220-, "National Pollutant Discharge Elimination System Permit Program." This regulation also excludes the injection of fluid through wells, which is regulated by WAC 173-218, "Underground Injection Control Program."

3.4.8 Dangerous Waste Regulations (WAC 173-303)

Any release of a dangerous or hazardous substance (as designated by WAC) to the environment, except permitted releases, must be reported. Waste streams that have the potential to contain dangerous waste constituents must be monitored accordingly.

3.5 LOCAL REGULATIONS

At the local level, the EPA designated the Benton Clean Air Authority with the responsibility to oversee and enforce EPA asbestos regulations under the National Emission Standards for Hazardous Air Pollutants (40 CFR, Subpart M). In addition, the Benton Clean Air Authority regulates open burning, as an extension of Ecology's open burning requirements (WAC 173-425). In both areas of responsibility, the Benton Clean Air Authority enforces/adopts the federal and/or state regulations by reference, as well as imposes additional requirements on sources such as the Hanford Site from the local agency level.

Table 3-1. Regulatory Requirements Matrix

Agency/originator	Regulation, standard, or permit	Applicable to facility	Summary/application
U.S. DOE, Washington, D.C.	DOE Order 450.1, *Environmental Protection Program*	X	Provides general environmental protection standards
	DOE Order 5400.5, *Radiation Protection of the Public and Environment*	X	Sets radioactive release standards for the public and environment (dose limits).
	DOE Order 435.1, *Radioactive Waste Management*	X	Sets radioactive waste management requirements (10 CFR 835 requires monitoring for outdoor contamination near facility)
	DOE/EH-0173T, *Environmental Regulatory Guide for Radiological Effluent Monitoring and Environmental Surveillance*	X	Provides guidance for effluent sampling and monitoring
U.S. EPA, Washington, D.C.	40 CFR 60, "Standards of Performance for New Stationary Sources"	X	Establishes monitoring requirements for air pollutants
	40 CFR 61, National Emission Standards for Hazardous Air Pollutants (NESHAPs)	X	Sets NESHAPs for hazardous air pollutants (including radionuclides – Subpart H)
	40 CFR 70, "State Operating Permit Program"	X	Requires state AOP programs (i.e., WAC 173-401)
	40 CFR 261, "Identification and Listing of Hazardous Waste"	X	Identifies and lists hazardous wastes
	40 CFR 302, "Designation, Reportable Quantities, and Notification"	X	Identifies the allowable release limits of hazardous and radioactive constituents
ANSI, New York, NY	N 13.1*, "Guidance to Sampling Airborne Radioactive Materials in Nuclear Facilities"	X	Sets standards for effluent monitoring systems
	N 42.18*, "Specification and Performance of On-Site Instrumentation for Continuously Monitoring Radioactivity in Effluents"	X	Recommendations for the selection of instrumentation for the monitoring of radioactive effluents
	ANSI N323, "Radiation Protection Instrumentation Test and Calibration"	X	Sets standards for calibration of radiation detection instrumentation, such as CAMs
Washington State Department of Ecology, Olympia, WA	WAC 173-216, "State Waste Discharge Permit Program"	X	Governs discharges to ground and surface waters
	WAC 173-220, "National Pollutant Discharge Elimination System Permit (NPDES)"	N/A	Governs wastewater discharges to navigable waterways; controls NPDES permit process
	WAC 173-303, "Dangerous Waste Regulations"	X	Regulates dangerous wastes; prohibits direct release to soil columns
	WAC 173-400, "General Regulations for Air Pollution Sources"	X	Sets emissions standards for hazardous air pollutants
	WAC 173-401, "Air Operating Permit Program"	X	Establishes an operating permit for hazardous (regulated) air pollutants, including radionuclides
	WAC 173-460, "Control for New Sources of Toxic Air Pollutants"	X	Sets standards or new sources of toxic air pollutants
	WAC 173-480, "Washington State Ambient Air Quality Standard and Emission Limits for Radionuclides"	X	Endorses the 10 mrem/year EDE-EPA standards (40 CFR 61, Subpart H)
Washington State Department of Health, Olympia, WA	WAC 246-247, "Radiation Protection – Air Emissions"	X	Sets standards for registration, permitting, notification, new sources, review, monitoring, and reports
	"Notice of Construction"	X	If Applicable.
Benton Clean Air Authority, Richland, WA	Regulation 1	X	Regulates air quality regarding compliance with 40 CFR 61,Subpart M, for asbestos and open burning.

N/A = not applicable.

*Referenced in DOE Orders and EPA regulations.

4.0 IDENTIFICATION AND CHARACTERIZATION OF EFFLUENT STREAMS

4.1 IDENTIFICATION AND CHARACTERIZATION OF SOURCE TERMS CONTRIBUTING TO EACH EFFLUENT STREAM

Radionuclide source terms and major contributors to the potential offsite dose are discussed and derived in HNF-SD-WM-EMP-031, *Tank Farm NESHAP Designation Determinations*, various notices of constructions and in the Hanford Site AOP application. In general, common radionuclides identified are Sr-90, Cs-137, Pu-239/240, and Am-241. Specific requirements are identified in the various permits/NOCs as required by WAC 246-247.

As previously identified, BBIs are available and accessible over the Internet through the TWINS2 interface at the following internet address:

http://twins.pnl.gov:8001/TCD/main.html

5.0 EFFLUENT POINT OF DISCHARGE DESCRIPTION

This section characterizes the effluent discharge points within Tank Farms for those effluent streams with the potential to exceed emissions of 0.1 mrem per year. This characterization includes the identification of all contributing streams, physical dimensions, identification of any monitoring systems, flow rates, and other pertinent information.

5.1 STACK 296-A-42; 241-AY/AZ TANK FARM EXHAUSTER

The 296-A-42 exhauster stack (otherwise know as the 702-AZ exhauster) was installed under project W-030 to replace the older 296-A-17 stack. The 296-A-42 exhauster provides primary tank ventilates for Tanks 241-AY-101, 241-AY-102, 241-AZ-101, and 241-AZ-102. This exhauster is a variable speed exhauster which is capable of varying flow rates through each individual tank as necessary. Its maximum operation flow rate is 1,000 standard ft^3/min. The following pertinent information applies to this emission point:

Exhaust Duct:	10.42 in. diameter exhaust duct leading to 55 foot stack.
Exhaust Fans:	AZ-K1-5-1A and AZ-K1-5-1B; 1,000 ft^3/min @ 50 °F (each)
High-efficiency particulate air (HEPA) Filter:	Two trains, 2 filters each (in series)

This ventilation system samples and monitors emissions continuously. The sampling system installed on this exhaust system has the following capabilities:

A record sampler continuously collects particulate samples. The samples are transported an analyzed in a laboratory.

The record sampler contains a cartridge holder which is used to collect quarterly radio-iodine samples. These samples are also analyzed in a laboratory.

A beta continuous air monitor (CAM) is used to continuously monitor the effluent for beta particulate radionuclides. Samples can be sent to the laboratory for analysis.

The stack flow rate is continuously measured and totalized.

The record sample flows are totalized.

Results of all sample analyses will be published in the following Hanford Site annual emission reports. The quality of these analyses is discussed in the current revisions of the following documents:

HNF-EP-0528, *National Emission Standards for Hazardous Air Pollutants (NESHAP) Quality Assurance Project Plan for Radioactive Air Emissions*

HNF-EP-0835, *Statement of Work for Services Provided by the Waste Sampling and Characterization Facility for the Environmental Compliance Program during Calendar Year 200X*

RPP-QAPP-004, *CHG Quality Assurance Program Plan for Tank Farm Contractor Radioactive Air Emissions.*

5.2 STACKS 296-A-44 AND 296-A-45; 241-AN TANK FARM EXHAUSTER

The 296-A-44 and 296-A-45 stack exhausters were installed under project W-314 to replace the older 296-A-29 stack exhauster. These new exhausters were installed to serve as the primary tank exhauster for Tanks 241-AN-101, 241-AN-102, 241-AN-103, 241-AN -104, 241-AN-105, 241-AN-106, and 241-AN-107. Both ventilation systems are designed to operate together to provide up to a maximum flow rate of 4,000 standard ft^3/min. Each ventilation system is designed to operate on its own as well, with the other serving as a backup. Each ventilation system consists of individual exhauster trains (fans and stacks) designed with a fan rating of 2,000 standard ft^3/min. This rating is based on the design specification that the system must be capable of producing flows up to 2,000 standard ft^3/min at 150°F and 100 percent relative humidity. The actual fans have been designed to produce an air flow of up to 2,851 actual ft^3/min at 170°F, at a relative humidity of 61 percent, and at a combined pressure at the fan inlet of 22.7 in. of water. At this capacity, it has been estimated that these fans will produce flows up to 2,120 standard ft^3/min under the hottest operating temperatures, and with dirty pre-filters and HEPA filters. The following pertinent information applies to these emission points:

Stacks (both):	10.02" i.d. (circular diameter) 27' 10-1/2" (height) 668' grade elevation
Exhaust Fans:	296-A-44: #EF-009, 2851 actual ft^3/min @ 22.7 in. wg. & 170°F
	296-A-45: #EF-010, 2851 actual ft^3/min @ 22.7 in. wg. & 170°F
HEPA Filter:	One train for each fan, 2 filters each (in series)

These new ventilation systems will sample and monitor emissions continuously. A separate system is installed on each stack. Each system will have the following capabilities:

A record sampler continuously collects particulate samples. The samples are transported an analyzed in a laboratory.

A beta CAM is used to continuous monitor the effluent for beta particulate radionuclides. Samples can be sent to the laboratory for analysis.

The stack flow rate is continuously measured and totalized.

The record sample flows are totalized.

Emissions of C-14 are estimated to contribute greater than 25 percent of the total effective dose equivalent (TEDE) to the maximum exposed individual (MEI) after controls. The method used to arrive at this contribution is conservative. It was therefore proposed in the permit application for operation of these systems that a sample of C-14 be collected quarterly and analyzed to determine its true contribution to the MEI. If analyses show that C-14 does contribute greater than 25 percent after controls, a C-14 continuous sampler will be installed.

Results of all sample analyses will be published in the following Hanford Site annual emission reports. The quality of these analyses is discussed in the current revisions of the following documents:

HNF-EP-0528, *National Emission Standards for Hazardous Air Pollutants (NESHAP) Quality Assurance Project Plan for Radioactive Air Emissions*

HNF-EP-0835, *Statement of Work for Services Provided by the Waste Sampling and Characterization Facility for the Environmental Compliance Program during Calendar Year 200X*

RPP-QAPP-004, *CHG Quality Assurance Program Plan for Tank Farm Contractor Radioactive Air Emissions.*

5.3 STACKS 296-A-46 AND 296-A-47; 241-AW TANK FARM EXHAUSTERS

The 296-A-46 and 296-A-47 stack exhausters were installed under Project W-314 to replace the older 296-A-27 stack exhauster. These new exhausters were installed to serve as the primary tank exhauster for Tanks 241-AW-101, 241-AW-102, 241-AW-103, 241-AW-104, 241-AW-105, and 241-AW-106. Both ventilation systems are designed to operate together to provide up to a maximum flow rate of 4,000 standard ft^3/min. Each ventilation system is designed to operate on its own as well – with the other serving as backup. Each ventilation system consist of individual exhauster trains (fans and stacks), designed with a fan rating of 2,000 standard ft^3/min. This rating is based on design specifications that the system must be capable of producing flows up to 2,000 standard ft^3/min at 150°F and 100 percent relative humidity. The actual fans have been designed to produce an air flow of up to 2,851 actual ft^3/min at 170°F, at a relative humidity of 61 percent, and at a combined pressure at the fan inlet of 22.7 in. of water. At this capacity, it has been estimated that these fans will

produce flows up to 2,120 standard ft^3/min under the hottest operating temperatures, and with dirty pre-filters and HEPA filters. The following pertinent information applies to these emission points:

Stacks (both):	10.02" i.d. (circular diameter) 27' 10-1/2" (height) 687' grade elevation
Exhaust Fans:	296-A-46: #EF-009, 2851 actual ft^3/min @ 22.7 in. wg. & 170°F
	296-A-47: #EF-010, 2851 actual ft^3/min @ 22.7 in. wg. & 170°F
HEPA Filter:	One train for each fan, 2 filters each (in series)

These new ventilation systems will sample and monitor emissions continuously. A separate system is installed on each stack. Each system will have the following capabilities:

A record sampler continuously collects particulate samples. The samples are transported and analyzed in a laboratory.

A beta CAM is used to continuously monitor the effluent for beta particulate radionuclides. Samples can be sent to the laboratory for analysis.

The stack flow rate is continuously measured and totalized.

The record sample flows are totalized.

Emissions of C-14 are estimated to contribute greater than 25 percent of the TEDE to the MEI after controls. The method used to arrive at this contribution is conservative. It was therefore proposed in the permit application for operation of these systems that a sample of C-14 be collected quarterly and analyzed to determine its true contribution to the MEI. If analyses show that C-14 does contribute greater than 25 percent after controls, a C-14 continuous sampler will be installed.

Results of all sample analyses will be published in the following Hanford Site annual emission reports. The quality of these analyses is discussed in the current revisions of the following documents:

HNF-EP-0528, *National Emission Standards for Hazardous Air Pollutants (NESHAP) Quality Assurance Project Plan for Radioactive Air Emissions*

HNF-EP-0835, *Statement of Work for Services Provided by the Waste Sampling and Characterization Facility for the Environmental Compliance Program during Calendar Year 200X*

RPP-QAPP-004, *CHG Quality Assurance Program Plan for Tank Farm Contractor Radioactive Air Emissions.*

5.4 STACK 296-P-43, 500 FT^3/MIN PORTABLE EXHAUSTER, POR04/SKID B

This exhauster is a skid mounted 500 ft^3/min HEPA filter (two stages) portable exhauster. This exhauster is one of several exhausters which will be used to provide an active ventilation system for various operations in Tank Farms. These operations include SST waste retrieval and ultimate tank closure. The following pertinent information applies to this emission point:

Stack:	17' (height from bottom of skid) 6.065" i.d.
Exhaust Fan:	#EF-001, 500 ft^3/min rated design capacity
HEPA Filter:	One train, 2 filters each (in series)

This exhauster is provided with a system which will sample and monitor ventilation emissions continuously. This system has the following capabilities:

A record sampler continuously collects particulate samples. The samples are transported an analyzed in a laboratory.

A beta CAM is used to continuous monitor the effluent for beta particulate radionuclides. Samples can be sent to the laboratory for analysis.

The stack flow rate is continuously measured and totalized.

The record sample flows are totalized.

Sample results will be published in the annual Hanford Site emission reports. The quality and detection limits of these analyses are controlled via the current revisions of the following documents:

HNF-EP-0528, *National Emission Standards for Hazardous Air Pollutants (NESHAP) Quality Assurance Project Plan for Radioactive Air Emissions*

HNF-EP-0835, *Statement of Work for Services Provided by the Waste Sampling and Characterization Facility for the Environmental Compliance Program during Calendar Year 200X*

RPP-QAPP-004, *CHG Quality Assurance Program Plan for Tank Farm Contractor Radioactive Air Emissions.*

5.5 STACK 296-P-44, 500 FT^3/MIN PORTABLE EXHAUSTER, POR05/SKID C

This exhauster is a skid mounted 500 ft^3/min HEPA filter (two stages) portable exhauster. This exhauster is one of several exhausters which will be used to provide active ventilation system for various operations in Tank Farms. These operations include SST waste retrieval and ultimate tank closure. The following pertinent information applies to this emission point:

Stack:	17' (height from bottom of skid) 6.065" i.d.
Exhaust Fan:	#EF-001, 500 ft^3/min rated design capacity
HEPA Filter:	One train, 2 filters each (in series)

This exhauster is provided with a system which will sample and monitor ventilation emissions continuously. This system has the following capabilities:

- A record sampler continuously collects particulate samples. The samples are transported and analyzed in a laboratory.
- A beta CAM is used to continuously monitor the effluent for beta particulate radionuclides. Samples can be sent to the laboratory for analysis.
- The stack flow rate is continuously measured and totalized.
- The record sample flows are totalized.

Sample results will be published in the annual Hanford Site emission reports. The quality and detection limits of these analyses are controlled via the current revisions of the following documents:

HNF-EP-0528, *National Emission Standards for Hazardous Air Pollutants (NESHAP) Quality Assurance Project Plan for Radioactive Air Emissions*

HNF-EP-0835, *Statement of Work for Services Provided by the Waste Sampling and Characterization Facility for the Environmental Compliance Program during Calendar Year 200X*

RPP-QAPP-004, *CHG Quality Assurance Program Plan for Tank Farm Contractor Radioactive Air Emissions.*

5.6 STACK 296-P-45, 500 FT^3/MIN PORTABLE EXHAUSTER, POR06/SKID D

This exhauster is a skid mounted 500 ft^3/min HEPA filter (two stages) portable exhauster. This exhauster is one of several exhausters which will be used to provide an active ventilation system for various operations in Tank Farms. These operations include SST waste retrieval and ultimate tank closure. The following pertinent information applies to this emission point:

Stack:	17' (height from bottom of skid) 6.065" i.d.
Exhaust Fan:	#EF-001, 500 ft^3/min rated design capacity
HEPA Filter:	One train, 2 filters each (in series)

This exhauster is provided with a system which will sample and monitor ventilation emissions continuously. This system has the following capabilities:

- A record sampler continuously collects particulate samples. The samples are transported and analyzed in a laboratory.
- A beta CAM used to continuously monitor the effluent for beta particulate radionuclides. Samples can be sent to the laboratory for analysis.
- The stack flow rate is continuously measured and totalized.
- The record sample flows are totalized.

Sample results will be published in the annual Hanford Site emission reports. The quality and detection limits of these analyses are controlled via the current revisions of the following documents:

HNF-EP-0528, *National Emission Standards for Hazardous Air Pollutants (NESHAP) Quality Assurance Project Plan for Radioactive Air Emissions*

HNF-EP-0835, *Statement of Work for Services Provided by the Waste Sampling and Characterization Facility for the Environmental Compliance Program during Calendar Year 200X*

RPP-QAPP-004, *CHG Quality Assurance Program Plan for Tank Farm Contractor Radioactive Air Emissions.*

5.7 STACK 296-P-47, 1,000 FT^3/MIN PORTABLE EXHAUSTER, POR-008

This exhauster is a skid mounted 1,000 ft^3/min HEPA filter (two stages) portable exhauster. This exhauster is one of several exhausters which will be used to provide an active ventilation system for various operations in Tank Farms. These operations include SST waste retrieval and ultimate tank closure. The following pertinent information applies to this emission point:

Stack:	17' (height from bottom of skid) 6.065" i.d.
Exhaust Fan:	#EF-001, 1,000 ft^3/min rated design capacity
HEPA Filter:	One train, 2 filters each (in series)

This exhauster is provided with a system which will sample and monitor ventilation emissions continuously. This system has the following capabilities:

- A record sampler continuously collects particulate samples. The samples are transported and analyzed in a laboratory.
- A beta CAM is used to continuously monitor the effluent for beta particulate radionuclides. Samples can be sent to the laboratory for analysis.
- The stack flow rate is continuously measured and totalized.
- The record sample flows are totalized.

Sample results will be published in the annual Hanford Site emission reports. The quality and detection limits of these analyses are controlled via the current revisions of the following documents:

HNF-EP-0528, *National Emission Standards for Hazardous Air Pollutants (NESHAP) Quality Assurance Project Plan for Radioactive Air Emissions*

HNF-EP-0835, *Statement of Work for Services Provided by the Waste Sampling and Characterization Facility for the Environmental Compliance Program during Calendar Year 200X*

RPP-QAPP-004, *CHG Quality Assurance Program Plan for Tank Farm Contractor Radioactive Air Emissions.*

5.8 STACK 296-P-48, 500 FT^3/MIN PORTABLE EXHAUSTER, POR03

This exhauster is a skid mounted 500 ft^3/min HEPA filter (two stages) portable exhauster. This exhauster is one of several exhausters which will be used to provide an active ventilation system for various operations in Tank Farms. These operations include SST waste retrieval and ultimate tank closure. The following pertinent information applies to this emission point:

Stack:	17' (height from bottom of skid) 6.065" i.d.
Exhaust Fan:	#EF-001, 500 ft^3/min rated design capacity
HEPA Filter:	One train, 2 filters each (in series)

This exhauster is provided with a system which will sample and monitor ventilation emissions continuously. This system has the following capabilities:

- A record sampler continuously collects particulate samples. The samples are transported and analyzed in a laboratory.
- A beta CAM is used to continuously monitor the effluent for beta particulate radionuclides. Samples can be sent to the laboratory for analysis.
- The stack flow rate is continuously measured and totalized.
- The record sample flows are totalized.

Sample results will be published in the annual Hanford Site emission reports. The quality and detection limits of these analyses are controlled via the current revisions of the following documents:

HNF-EP-0528, *National Emission Standards for Hazardous Air Pollutants (NESHAP) Quality Assurance Project Plan for Radioactive Air Emissions*

HNF-EP-0835, *Statement of Work for Services Provided by the Waste Sampling and Characterization Facility for the Environmental Compliance Program during Calendar Year 200X*

RPP-QAPP-004, *CHG Quality Assurance Program Plan for Tank Farm Contractor Radioactive Air Emissions.*

5.9 STACK 296-B-28, 244-BX DOUBLE-CONTAINED RECEIVER TANK

This exhauster ventilates the 244-BX DCRT and annulus. The 244-BX DCRT serves as a transfer station for waste transfers. The following pertinent information applies to this emission point:

Stack:	11' (height above ground) 6" i.d. (circular diameter) 654'-6" Grade elevation (ref)
Exhaust Fan:	EF-1; 250 ft^3/min (designed to vary 125-250 ft^3/min)
HEPA Filter:	Three trains, 2 filters each (in series) in each train

This exhauster is provided with a system which will sample and monitor ventilation emissions continuously. This system has the following capabilities:

- A record sampler continuously collects particulate samples. The samples are transported and analyzed in a laboratory.
- A beta CAM is used to continuously monitor the effluent for beta particulate radionuclides. Samples can be sent to the laboratory for analysis.
- The record sample flows are totalized.

Sample results will be published in the annual Hanford Site emission reports. The quality and detection limits of these analyses are controlled via the current revisions of the following documents:

HNF-EP-0528, *National Emission Standards for Hazardous Air Pollutants (NESHAP) Quality Assurance Project Plan for Radioactive Air Emissions*

HNF-EP-0835, *Statement of Work for Services Provided by the Waste Sampling and Characterization Facility for the Environmental Compliance Program during Calendar Year 200X*

RPP-QAPP-004, *CHG Quality Assurance Program Plan for Tank Farm Contractor Radioactive Air Emissions.*

5.10 STACK 296-S-22, 244-S DOUBLE-CONTAINED RECEIVER TANK EXHAUSTER

This exhauster ventilates the 244-S DCRT and annulus. The 244-S DCRT serves as a transfer station for waste transfers. The following pertinent information applies to this emission point:

Stack:	11'-1" (height above ground) 6" i.d. (circular diameter) 666' Grade elevation (ref)
Exhaust Fan:	#EF-001; 165 ft^3/min @ 240°F
HEPA Filter:	Two trains, 2 filters each (in series) in each train

This exhauster is provided with a system which will sample and monitor ventilation emissions continuously. This system has the following capabilities:

- A record sampler continuously collects particulate samples. The samples are transported and analyzed in a laboratory.
- A beta CAM used to continuously monitor the effluent for beta particulate radionuclides. Samples can be sent to the laboratory for analysis.
- The record sample flows are totalized.

Sample results will be published in the annual Hanford Site emission reports. The quality and detection limits of these analyses are controlled via the current revisions of the following documents:

HNF-EP-0528, *National Emission Standards for Hazardous Air Pollutants (NESHAP) Quality Assurance Project Plan for Radioactive Air Emissions*

HNF-EP-0835, *Statement of Work for Services Provided by the Waste Sampling and Characterization Facility for the Environmental Compliance Program during Calendar Year 200X*

RPP-QAPP-004, *CHG Quality Assurance Program Plan for Tank Farm Contractor Radioactive Air Emissions.*

5.11 STACK 296-T-18, 244-TX DOUBLE-CONTAINED RECEIVER TANK EXHAUSTER

This exhauster ventilates the 244-TX DCRT and annulus. The 244-TX DCRT serves as a transfer station for waste transfers. The following pertinent information applies to this emission point:

Stack:	11' (height above ground) 6" i.d. (circular diameter) 668' Grade elevation (ref)
Exhaust Fan:	#EF-001; 250 ft^3/min (designed to vary 125-250 ft^3/min)
HEPA Filter:	Three trains, 2 filters each (in series) in each train

This exhauster is provided with a system which will sample and monitor ventilation emissions continuously. This system has the following capabilities:

- A record sampler continuously collects particulate samples. The samples are transported and analyzed in a laboratory.
- A beta CAM is used to continuously monitor the effluent for beta particulate radionuclides. Samples can be sent to the laboratory for analysis.
- The record sample flows are totalized.

Sample results will be published in the annual Hanford Site emission reports. The quality and detection limits of these analyses are controlled via the current revisions of the following documents:

HNF-EP-0528, *National Emission Standards for Hazardous Air Pollutants (NESHAP) Quality Assurance Project Plan for Radioactive Air Emissions*

HNF-EP-0835, *Statement of Work for Services Provided by the Waste Sampling and Characterization Facility for the Environmental Compliance Program during Calendar Year 200X*

RPP-QAPP-004, *CHG Quality Assurance Program Plan for Tank Farm Contractor Radioactive Air Emissions.*

6.0 EFFLUENT MONITORING/SAMPLING SYSTEM DESIGN CRITERIA

This section presents design criteria for gaseous effluent monitoring systems. These include criteria contained in federal regulations including DOE Order 5400.5, DOE/EH-0173T, and design criteria used to ensure compliance with the regulations.

The NESHAP regulations establish requirements and procedures for measuring radionuclide emissions from point sources (e.g., stacks and vents). Specific requirements and procedures are called out by 40 CFR 61.93. Alternative procedures are allowed if EPA has granted prior approval. These requirements and procedures are summarized below:

6.1 EXISTING SOURCES

6.1.1 Flow-Rate Measurement

Effluent flow-rate must be measured using 40 CFR 60, Appendix A, Method 2, or ANSI N13.1. Method 2 is applicable for large stacks greater than 12 in. in diameter. Method 2A is applicable for small stacks or ducts. This method measures the entire flow as it is routed through a gas volume meter. However, it is difficult to route the entire stack flow through a gas meter unless the stack is extremely small. Since the sampling system can be routed through a gas volume meter, this method has been deemed appropriate for use in sampling system flow accuracy requirements. Specifically, the accuracy requirement for this method is to be within 2 percent. Method 2C is more appropriate for use in measurement of flows from small stacks. In some cases Method 2D can also be used.

ANSI N-13.1 calls out various methods for measurement of stack effluent flows. It requires periodic measurements in some cases and continuous measurements in other cases, depending on how high the estimated potential emissions are.

40 CFR 61.93 requires that the frequency of the flow-rate measurements shall depend upon the variability of the effluent flow-rate. For variable flow-rates, continuous or frequent flow-rate measurements shall be made. For relatively constant flow-rates, only periodic measurements are necessary. If ANSI N13.1 was used, then it shall be used to determine the frequency of the flow-rate measurements.

Methods 2 or 2C are manual measurements. Since manual measurements involve labor resources and other relevant costs, the definitions of "frequent measurements" and "variability of effluent flow-rate" become important. These definitions, however, have never been documented and agreed to. However, ANSI has made an attempt to define variability as more than 20 percent. It has also been argued over the years that the frequent measurement requirement is satisfied if measurements are made quarterly throughout the year.

Automated flow-rate measurement instrumentation may be used. Essentially, automated flow-rate instrumentation must be used to satisfy the continuous measurement requirement of ANSI. Permission to use automated flow rate measurement was first requested from the EPA in 1993. Approval was allowed, granted the instrumentation was certified accurate per 40 CFR 52, Appendix E. This method was documented as a method for demonstrating compliance in a letter from Jerry Leitch, EPA, to J. D. Bauer, RL, dated March 11, 1993. This method is also referenced as applicable for use in WAC 246-247. In short, this method specifies instrumentation accuracies that must be met when compared against Method 2 type measurements taken over the 168-hour time frame during which the flows are adjusted over the full range of expected flow conditions. ANSI N13.1 does not discuss this 168-hour certification process. However, it does require that the instrumentation be proven to have the same accuracy requirement – to within 10 percent of a manual measurement performed similar to Method 2.

6.1.2 Radionuclides Measurement

The sampling and monitoring probes or sensors must be placed within the stack using 40 CFR 60, Appendix A, Method 1 or 1A. If flow measurements were taken per requirement of ANSI N13.1, then the sampling probes or sensors must also be located per ANSI N13.1.

Some of the existing sampling/monitoring probes have been designed per guidance presented in ANSI N13.1-1969. Appendix B & C of this standard provides guidance for determination of how representative the collected sample should be. However, if ANSI N13.1-1999 was used to select the sampling probe location within the stack, then it shall also be used for the design of the sampling probes and associated equipment.

Radionuclides must be analyzed according to 40 CFR 61, Appendix B, Method 114.

A QA program must be conducted that meets the performance requirements described in 40 CFR 61, Appendix B, Method 114. However, if existing sources elect to follow the criteria in ANSI N13.1-1999, then the QA program in ANSI N13.1-1999 shall be used.

Alternative designs and analysis methods must be addressed and approved by the EPA administrator.

6.2 NEW SOURCES

A new source is defined as any newly constructed or any source undergoing modification resulting in the EDE to be greater than 1 percent of the standard as prescribed in **§61.92** (10 mrem) after October 1, 2000.

6.2.1 Flow-Rate Measurements

ANSI N13.1-1999 shall be used to determine the frequency and method for volumetric flow-rates.

6.2.2 Radionuclides Measurement

ANSI N13.1-1999 shall be used to select monitoring or sampling sites.

ANSI N13.1-1999 shall be used to select the sampling probes and associated equipment.

Radionuclides must be analyzed according to methods in 40 CFR 61, Appendix B, Method 114.

A QA program shall be conducted that meets the performance requirements described in ANSI N13.1-1999.

Alternative designs and analysis methods must be addressed and approved by the EPA administrator.

7.0 CHARACTERIZATION OF EFFLUENT MONITORING SYSTEMS

This section characterizes the existing effluent monitoring systems for those effluent discharge points with a potential-to-emit (PTE) greater to or equal to 0.1 mrem per year. These characterizations include a description of the instrumentation.

7.1 STACK SPECIFIC EFFLUENT MONITORING DESIGN DESCRIPTIONS

Stack sampling and monitoring systems may consist of CAMs and a record sampler or record sampler only. The record sample portion of the sampling system is considered the regulatory portion of the system and is used to quantify and report what dose the public receives from operation of that particular emission point. CAMs are required on exhaust systems with a PTE greater than 5 mrem/year. They can also be used as a backup to the record samplers. If the filter paper from the record sampler could not be used for analysis for some reason, the CAM's filter paper may be used as the backup. CAM alarm set points are discussed in Section 7.2.2. Basic elements of sampling and monitoring systems consist of the following:

- The sampling probe, which withdraws the sample from the stack.
- The sample transport line, which transports the sample to a sample collection (record sampler) and/or other detection device such as a CAM.
- Heat trace on the sample transport line is to prevent condensation within it.
- The collection and/or detection devices, which collects the sample.
- A sample flow measurement system, which measures flow through the system.
- A sample flow totalizing system, which provides the total flow for a specific collected sample.
- A flow regulating and/or adjusting system, which maintains the correct flow through the collection device.
- A vacuum pump or other device, which provides the flow through the system.
- A timing device, which is used track the sample collection time and is especially useful when systems are operated intermittently.
- When exhausters operate intermittently, some means must be provided to ensure the sampling system is only operated while the exhauster is operating.
- In order to quantify exhauster emissions for purposes of annual reports, total exhauster flow-rates are also necessary. Exhauster flows can be determined using manual

measurement methods together with stack operational logs, or via stack flow measurement and totalizing systems.

The next few sections discuss exhauster specific instrumentation.

7.1.1 Stack 296-A-42; 241-AY/AZ Tank Farm Exhauster

The 296-A-42 exhauster system consists of individual record sample and beta CAM probes designed per ANSI N13.1-1969, Appendix A. The probes are installed inside a 10-in. vent duct. The probes are designed with two nozzles, each using the correct multiple of 5 times the internal diameter of the nozzle for bend and nozzle length. Just after the nozzle opening there is a 7 to 8 degree internal expansion designed to slow particle velocities. This internal expansion design has been shown experimentally to lessen particle loss due to turbulent impaction. This probe design is slightly different than the sample design given in ANSI N13.1-1969. To accommodate the ANSI design, however, the nozzle bend is 5 times the interior just where the bend begins.

The sample transport line sizes and lengths were chosen to optimize the system's collection efficiencies using computerized particle deposition programs. Collection efficiencies for the record sampler for 10 micron sized particles are estimated at between 55 an 63 percent, depending upon the ventilation flow-rate.

Sampling and monitoring flows are created via a vacuum pump system located in the instrument cabinet. Sample flow rates are independently determined by total and static pressure signals. Sample flows are displayed on integral light-emitting diode (LED) in units of standard ft^3/min. In addition, signals are sent to flow controllers (one for the record sampler and one for the beta CAM) which control the sample flow valves. The flow controllers compare sample flow signals to signals received from the stack flow transmitter. The sample flow valves are controlled to maintain the sample flow (for both the record sampler and the CAM) proportional to stack flow as conditions vary. The entire system is provided with an anisokinetic flow alarm light which activates when stack flow and sample flow or CAM flow velocities vary by more than 10. Lastly, both stack and sample percent flows are measured by individual flow totalizers. This system does not have any timers.

7.1.2 Stacks 296-A-44 and 296-A-45 for 241-AN Tank Farm Exhausters; Stacks 296-A-46 and 296-A-47 for 241-AW Tank Farm Exhausters

The exhausters for AN and AW Tank Farms are of the same design. The sampling and monitoring system installed on these ventilation units consist of individual record sample and beta CAM probes designed to the applicable requirements of ANSI N13.1-1999, *Sampling and Monitoring Releases of Airborne Radioactive Substances from Stacks and Ducts of Nuclear*

Facilities. These systems collect samples using shrouded probes. Flow through the CAM probe is controlled to a constant 1 ft^3/min. rate. Flow through the record sample probe is varied from 1 to 2 ft^3/min. as the exhauster flow varies from 1,000 to 2,000 ft^3/min.

Compliance with ANSI N13.1-1999, *Sampling and Monitoring Releases of Airborne Radioactive Substances from the Stacks and Ducts of Nuclear Facilities*, is specified in design specification RPP-7881 for the exhauster skids where the stack monitoring systems are located. To meet this requirement, the sampling location and sampling equipment for the four skids were qualified by testing by an independent team of Idaho State University and Auxier & Associates (see "ISU/Auxier" in reference section). The test methods and acceptance criteria were as prescribed in ANSI N13.1. Seven characteristics of sampling location, sample nozzle, and sample transport performance were evaluated against the appropriate ANSI N13.1 criteria. This was documented in a report, which concluded the systems performed in an acceptable manner with respect to all ANSI N13.1 qualification criteria. Test results documented a qualified operating range for stack flow from 401 to 2484 standard ft^3/min, corresponding to a variable sample flow rate from 0.7 to 2.5 ft^3/min, with a constant sample flow rate of 2.0 standard ft^3/min as an acceptable alternative. The evaluation also included an estimate of sample losses using the "Deposition 2001" computer code. The report will be retained in W-314 project files and vendor information (VI) files for the exhauster skids.

Inspection of the CAM and record sampler, and testing of stack monitoring and sampling system flow controls, vacuum pump controls, CAM failure alarms, CAM source check, stack flow instrumentation, and associated interlocks, are addressed in "cold" operational acceptance test, procedures W-314-OAT-1.4.1 (241-AN) and - 1.5.1 (241-AW).

Requirements in Section 7.5 and 7.6 of ANSI N13.1-1999 for periodic post-installation inspections, maintenance, and calibration will be addressed by the facility preventative maintenance program and various plant procedures, including 3-FCD-647, "AN and AW HVAC ANSI N13.1 Compliance." The latter procedure implements annual functional checks and inspections listed in listed on Table 5 of ANSI N13.1-1999. Calibration procedures have also been developed for stack and sample flow instrumentation.

7.1.3 Stack 296-P-43, 296-P-44, 296-P-45, and 296-P-48 Portable Exhausters

The sampling and monitoring systems on 296-P-43, 296-P-44. 296-P-45, 296-P-47, and 296-P-48 are all of the same design. The sampling and monitoring system installed on these ventilation units consist of a record sampler and a beta CAM. These systems are designed to the applicable requirements of ANSI N13.1-1999, *Sampling and Monitoring Releases of Airborne Radioactive Substances from Stacks and Ducts of Nuclear Facilities*. These systems collect samples using a shrouded probe. This system was tested to verify that the system met all applicable regulatory performance criteria. The test results were published in PNNL-11701, UC-702, *Generic Effluent Monitoring System Certification for Saltwell Portable Exhauster*, September 1997. The test was conducted over a range of stack flow rates from 200 to 1,100 ft^3/min. The system is designed with a single shrouded probe rated for a 2 ft^3/min.

flow-rate. The record sampler and CAM are connected to this probe through a flow splitter. During the test, the flow rate through each of the CAM and record sample legs of the system was held to a 1 ft^3/min. (standard) flow-rate.

7.1.4 Stack 296-B-28, 296-S-22, and 296-T-18 Exhauster

These exhausters use an older design. The system consists of a record sampler and a beta CAM. In addition, both the 296-S-22 and 296-T-18 systems contain an alpha CAM. The sampling system consists of the following elements:

Rotameter: The rotameter measures the flow-rate through the sampling system. Knowing the flow-rate is important to acquire a good sample. The rotameter consists of a ball floating in a column of fluid (air) in a tube.

Gasmeter: The gasmeter or totalizer quantifies flow through the sampling system. This meter has a six digit readout in cubic meters. Additional accuracy is provided for by a circular scale with 10 increments. Each increment indicates 0.005 m^3 (0.1766 ft^3). The needle must circle the scale twice for the first digit on the digital readout to increment once, indicating one tenth of a cubic meter.

Vacuum Gauge: The pressure (or vacuum) gauge measures the vacuum in the sampling system. Air coming from the stacks is first run through the record sample filter paper, then the flow meter and totalizer, and finally the air pump which pulls air through the system. The more particulate matter collected by sample filter paper, the higher the vacuum in the system. Filter papers are replaced either weekly or bi-weekly. Over this period, the vacuum within the sampling system should theoretically increase as particulate matter is collected. Pressure gauge readings are used in emission calculations to compute standard flows and volumes from the rotameter and gasmeter recorded values.

Flow Switch: The flow switch indicates when the sample flow falls below established limits. The purpose is three fold:

a. to prevent damage to the sample collection filter paper. As the filter paper collects particulates, the vacuum increases and the sample flow rate drops. If the vacuum increases too much, the filter paper may be damaged.

b. to prevent nonrepresentative sampling due to anisokinetic sampling conditions. As flow drops, isokinetic conditions necessary to acquire a representative sample are not maintained.

c. to indicate vacuum pump problems (e.g. no flow or failed condition).

Flow Regulator: The flow regulator adjusts, and is adjustable, to maintain an established or desired flow within the system. The regulator bleeds in bypass air to relieve increases in external head losses (increased vacuum) that would be caused typically by sample

filter loading or minor sample line plugging. Bypass air allows the pump to run cooler at its maximum capacity and thus increases the life of the pump.

Vacuum Pump and Filters: The vacuum pump is an oil-less carbon vane rotary pump and is provided with air filters, both intake and discharge, to prevent dirt and moisture from entering the regulator and pump chambers. Dirt and moisture can cause the pump vanes to act sluggish, or even to break; and can cause faulty performance of the regulators. The pump is a constant flow device. It is a 373 watts (1/2 HP), 115/230 VAC, 60 Hz, single-phase motor.

Timer: The timer can be used in combination with the rotameter as a backup to the gasmeter. The timer indicates the length of time the filter paper has been collecting a sample. The timer readout is an elapsed time resettable five digit meter which reads in hours. The first digit reads in tenths of an hour. It has a certified standard and must be accurate to ±1 percent. This device, however, is a synchronous motor. Accuracy of the timer is a function of the accuracy of Hanford's power line frequency. Discussions with electrical experts indicate that the power frequency varies from 58.5 to 61.5 Hz. Based on this, accuracy of the timer is closer to +/-2.5 percent. The timer only indicates hours and tenths of hours; and if it is assumed that one could accurately read one-half the smallest graduation, then the timer is only capable of accurately indicating +/-5 percent. There are no adjustments on this timer.

7.2 GENERAL SYSTEM DISCUSSION

7.2.1 The Record Sampler

The record samplers used through out Tank Farms are 47-millimeter in-line fixed sample holders. The sampler assembly holds a particulate membrane filter with a collection efficiency rated by the manufacturer at not less than 91 percent for a 0.3 micro-meter diameter aerosol. In 1991, the membrane filter manufacturer tested 24 samples for collection efficiency with a 0.3 micro-meter di-octyl phthalate aerosol. The measured average efficiency was 95.8 percent. ANSI N13.1-1999 lists the collection efficiency of these membrane filters at 99.7 percent to >99.9 percent.

The record sample collection filter paper and holder collects and samples particulate radionuclides from the stack or stream. This filter is sent to the laboratory on a periodic basis for analysis. The analytical results are used to quantify radionuclide emissions. This holder requires inspection periodically for wear and for leaks. The filter paper is removed for laboratory analysis and replaced with a new filter on a pre-determined schedule.

7.2.2 CAM Alarm Set-Points

Regulatory emission limits are set to offsite public dose exposures (see 40 CFR 61.92). Regulations are also established to restrict and require notification of increases in emissions. This is pointed out rather clearly in the recent wording being proposed for inclusion into the Hanford Site AOP. The wording goes as follows:

> "Conditions requiring WDOH notification within 24 hours. . . Notification is required if any of the above conditions occur and radioactive air emissions could cause the doses to the MEI to:
>
> - Exceed the 10 mrem/yr dose standard, or
> - Exceed the upper bound of "normal historical emission data scatter for a similar operating period..."

CAMs can be used as indicators of such increases. However, the situation demands that CAM alarm set-points be set based on meaningful emission increases. This is not a simple matter because fluctuations in background and increased levels of short-lived radionuclides, such as radon and radon daughters during inversion events can also be detected by the CAM. During these types of events, if the alarm set-point is set too low, it will annunciate. Under normal circumstances, this is not desired as these increases are not of real concern. To eliminate these types of annoyance/spurious alarms, the alarm set-point must be set high enough so the alarm does not annunciate at these levels; yet not so high that it misses a real elevated emission event. Available guidance on the matter suggests the set-point should be set as low as possible without causing more than one spurious alarm to occur per month. A suggested means of accomplishing this is to compile a data set from which a statistically based alarm set-point can be derived. This would allow tracking nominal radon increases and their associated magnitudes with the intent to base the set-point on a value just high enough to avoid most of these types of events. An attempt to accomplish this is discussed further below.

7.2.2.1 CAM Alarm Set-Point Basis

When a CAM is required, its alarm must be set to alarm at emission concentrations as low as possible without resulting in an excessive number of alarms due to normal fluctuations in background or normal fluctuations in emissions. The alarms are intended to provide timely warnings when the radionuclide concentration or content of emissions has increased significantly so that corrective actions are required to prevent their exceeding the discharge limits.

WHC-SD-WM-EMP-034, "Basis for Tank Farm Airborne Effluent Continuous Air Monitor Alarm Set Points" provides several recommendations for establishing CAM alarm set-points. One of these is to examine CAM alarm event readings and to establish alarm set-points to a

statistically significant value based on this analysis. Unfortunately, these types of readings are not recorded. CAM nominal readings were, however, recorded. CAM readings were obtained from the following sources:

702-A Beta CAM values were obtained from TF-OR-EF-AAX-D, "A & AX TANK FARMS DAILY ROUNDS" sheets dated from June 24, 1996, to June 23, 1997.

244-A Beta CAM values were recorded from TF-OR-A-01, from 6/24/96 until 12/15/96 and from TF-OR-EF-C-D, "C, CR TANK FARMS AND 244A DCRT LIFT STATION ROUNDS" sheets dated from June 2, 1997, to June 23, 1997.

244-BX Beta CAM values were obtained from TF-OR-WF-B-D, "BX, BY TANK FARMS AND 244-BX DCRT DAILY ROUNDS" sheets dated from December 30, 1996, to June 23, 1997.

244-CR Beta CAM values were obtained from TF-OR-EF-C-D, "C, CR TANK FARMS AND 244A DCRT LIFT STATION ROUNDS" sheets dated from May 13, 1995, to June 23, 1997.

241-C Farm Cam values were not examined because recorded values for the 296-C-16 stack CAM were not found.

244-S Beta CAM values were obtained from TF-OR-WST-01-D, "S, SY AND SX TANK FARMS DAILY ROUNDS" sheets date from January 1, 1997, to August 31, 1997.

244-TX Beta and Alpha values were obtained from TF-OR-WST-02-D, "242T, TX, TY AND U FARM TANK FARMS DAILY ROUNDS" sheets dated from September 1, 1994, to February 28, 1995. More recent dates were not used because these values are not being recorded on rounds any longer.

Data from the referenced sources were averaged, the standard deviations were found and the 3 sigma value computed. A 3 sigma value represents 99 percent of all the possible readings which might occur. From this set of values, a generic Tank Farm beta CAM set-point was established as 3,000 cpm. An alpha CAM alarm set-point has not been determined as there was insufficient data to evaluate.

7.2.2.2 Quantity-Based CAM Alarm Set-Point Equation Derivation

This section provides the derivation of an equation which relates CAM alarm set-points to stack emissions. The amount of material that is released from a stack effluent stream can be determined by multiplying the concentration of that material in the effluent stream by the total

volume of the effluent stream that was released. This can be expressed mathematically as follows:

$$Tr = \rho_k * V_k$$

where:

Tr is the total amount released and is normally expressed in units of curies (Ci).
ρ_k is the concentration of the material in the effluent stream.
V_k is the released volume of the effluent stream.

The released volume can be found from the flow rate of the effluent stream and the operating time of the system.

$$V_k = Q_k * t$$

where:

Q_k is the flow rate, and
t is the length of time that the system operated
Tr is therefore,

Equation 1: $$Tr = \rho_k * Q_k * t$$

Alarm set-points are established based on concentrations. From Equation 1 above, it is readily apparent that Tr is directly related to the concentration and the stack flow-rate. Therefore, as long as the stack flow-rate remains the same, increased emissions would be indicated by increased stack concentrations. The CAM can be used to indicate when this happens.

The CAM unit is designed to draw a portion of the stack effluent through a collection filter paper at certain sample flow-rates. A radiation detector head is installed as part of the CAM unit and used to monitor the activity collected on this filter. The average concentration seen by the CAM is determined by dividing the activity seen by the CAM detector head by the sample flow volume, which is the sample flow-rate multiplied by the time the system was collecting the sample. This is expressed mathematically as follows:

$$\rho_o = \frac{A}{Q_o \times t}$$

where:

ρ_o	=	the concentration of material seen in the CAM
A	=	the activity seen on the CAM's collection filter by the CAM's detector
Q_o	=	the flow-rate through the CAM

The variable of interest is the concentration in the stack (recall that an increase in the concentration being released is what the alarm set point should be set to). Therefore the variable of interest, as given in equation 1 is ρ_k. In order to assume that ρ_o (the concentration collected in the sample) is equivalent to ρ_k (the concentration in the stack) losses and efficiencies must be known or estimated. Expression of these losses or efficiencies can be done as follows:

$$\varepsilon * \rho_k = \rho_o$$

Where ε represents the efficiency of the sample collection and detection process, ε can be further broken down as follows:

ε_c = the sample collection efficiency
ε_f = the filter collection efficiency
ε_d = the detector efficiency

where

$$\varepsilon = \varepsilon_c * \varepsilon_f * \varepsilon_d$$

Recall that the variable of interest here is ρk, the concentration in the stack. With this:

Equation 2: $$\rho_k = \frac{A}{Q_o \times t \times \varepsilon_c \times \varepsilon_f \times \varepsilon_d}$$

The CAM reads out in cpm, which is an activity. As such, the alarm set-point can be set to "A," the activity collected on the filter paper. Solving for "A" now gives:

Equation 3: $$A = \rho_k * Q_o * t * \varepsilon_c * \varepsilon_f * \varepsilon_d$$

<u>Discussion of the Variables</u>:
Now that an appropriate equation is derived, a brief discussion of the variables involved is in order:

From the discussion above, ρ_k is usually expressed in units of μCi/ml.

The variable "t" is the time the sampler/monitor was running. This is the time since a fresh, clean filter was installed; and is usually expressed in units of hours.

Q_o is the variable for the sample flow-rate. A rough estimate for this variable is 5.7E-02 m^3 (2 ft^3) per minute or 3.4 m^3 (120 ft^3) per hour. Since ρk is expressed in units of μCi/m, a conversion factor is necessary in order to use ft^3/hour in this equation. One ft^3 is equivalent to 2.83168E+04 ml.

ε_d is the detector efficiency, expressed as a ratio of cpm/dpm (dpm is the abbreviation for disintegrations per minute). Since ρk is expressed in units of μCi/ml, a conversion factor is necessary to convert dpm to μCi. One μCi is equivalent to 2.22E+06 dpm.

ε_d is determined in the field. Available guidance suggests that εd efficiencies should be:

> Alpha CAM efficiency performance should always be >7 percent and <20 percent.
>
> Beta CAM efficiency performance should always be >10 percent for Cs-137, and >15 percent for Sr-90.

ε_f is the collection efficiency of the filter paper. The manufacturer's efficiency given for such filter paper is 91 percent. If another filter paper is used, the corresponding manufacturer's efficiency rating must be used.

ε_c is the collection efficiency of the sample probe and transport line. These values are usually obtained via deposition modeling. Possible particle sizes affect these efficiencies. ANSI N13-1-1999 requires that a 10 micron-sized particle size be used if the actual particle size is not known. Estimated collection efficiencies are provided in Table 7-1 below.

Table 7-1. Stack Sampling system Collection Efficiencies

Stack	ε_c	
	Record Sampler	CAM
296-A-42	55	36.1
296-A-44	68.7	72.6
296-A-45	68.7	72.6
296-A-46	68.7	72.6
296-A-47	68.7	72.6
296-B-28	3.6	3.6
296-P-43	76.1	81.71
296-P-44	76.1	81.71
296-P-45	76.1	81.71
296-P-47	76.1	81.71
296-P-48	76.1	81.71
296-S-22	9.2	9.2
296-T-18	8.8	8.8

With the variables defined and the conversion factors determined, equation 3 can be rewritten as follows:

$$A = \rho_k * Q_o * t * \varepsilon_c * \varepsilon_f * \varepsilon_d * 2.832E+04 \text{ ml/ft}^3 * 2.22E+06 \text{ dpm/}\mu\text{Ci}$$

$$= \rho_k * Q_o * t * \varepsilon_c * \varepsilon_f * \varepsilon_d * 6.286E+10 \text{ (ml)(dpm)/(ft}^3\text{)(}\mu\text{Ci)}$$

Another way to express this is to put the conversion factor into the denominator as follows:

Equation 4: $$A = \frac{\rho_k \times Q_o \times t \times \varepsilon_c \times \varepsilon_f \times \varepsilon_d \text{ (dpm)(ml)}}{1.591 \times 10^{-11} \text{ (ft}^3\text{)(}\mu\text{Ci)}}$$

Note that in Equation 4, one still has to put the units in for variables ρ_k, Q_o, t, and εd. These units should be:

μCi/ml for ρ_k

ft^3/hour for Q_o

hrs for t

ε_d cpm/dpm.

7.2.2.3 Interpretation of Alarm Set-Points

Using Equation 4 above, meaning can be placed on the 3,000 cpm alarm set-point from Section 7.2.2.1 above. The meaning will be in terms of stack emission concentrations. Table 7-3 tabulates what this set point means in terms of μCi/ml of stack emissions, per unit time that the filter paper has been installed and in terms of the collection efficiencies of the system. See Table 7-1 above for collection efficiency values. The Table 7-2 values were computed using the following other assumed values:

Q_o of 120

ε_d cpm/dpm of 0.15

ε_f of 0.91

For illustration purposes, a stack with a collection efficiency of 100 percent that alarms after the filter has been installed for the length of time given in the column header (i.e. 2 weeks, 1 week, 1 hour, 1 minute) will have seen estimated stack emissions listed in the row with the ε_c value of 1. Note, stack concentration values are not computed for εc values less than 20 percent as systems with values this low are not considered reliable or capable of collection.

Table 7-2. 3,000 Counts Per Minute Alarm Set-Point Meaning in Terms of Stack Emission Concentration

	2 Week	Week	Hr	Min	Hr	Min
εc	μCi/ml				dpm/ft^3	
1	8.7E-12	1.7E-11	2.9E-09	1.7E-07	183	10,996
0.9	9.6E-12	1.9E-11	3.2E-09	1.9E-07	204	12,218
0.8	1.1E-11	2.2E-11	3.6E-09	2.2E-07	229	13,745
0.7	1.2E-11	2.4E-11	4.2E-09	2.5E-07	262	15,708
0.6	1.4E-11	2.9E-11	4.9E-09	2.9E-07	305	18,327
0.5	1.7E-11	3.5E-11	5.8E-09	3.5E-07	367	21,992
0.4	2.2E-11	4.3E-11	7.3E-09	4.4E-07	458	27,490
0.3	2.9E-11	5.8E-11	9.7E-09	5.8E-07	611	36,653
0.2	4.3E-11	8.7E-11	1.5E-09	8.7E-07	916	54,980

7.2.2.4 Concentration-Based CAM Alarm Set-Points

Certain CAMs now in use within Tank Farms, in addition to the quantity-based alarms discussed in the previous sections, have concentration-based alarms. Vendor information on these CAMs describes these alarms as follows:

> "Slow Concentration Alarm Set-point - The slow concentration alarm set-point determines the concentration at which a slow concentration alarm will occur. The amount of history used to make this determination is defined by the slow alarm interval. An alarm will be posted if the current interval of slow alarm concentration history exceeds the concentration of the previous history interval by the value specified by the slow alarm set-point..."
>
> "Flow Concentration Alarm Set-point - The flow concentration alarm set-point determines the concentration at which a fast concentration alarm will occur. The amount of history used to make this determination is defined by the fast alarm interval. An alarm will be posted if the current interval of slow alarm concentration history exceeds the concentration of the previous history interval by the value specified by the slow alarm set-point..."

The slow alarm interval can be set from 1 to 120 minutes. The fast alarm interval can be set from 5 to 255 seconds.

What follows is a discussion and derivation of alarm set-points for these concentration based alarms. Table 7-4 tabulates the data discussed below.

Nominal Facility Emissions

The first step in establishing alarm set-points based on emission concentration which are independent upon how long the CAM's collection filter has been installed is to establish nominal emissions. Averages of these maximum values are also given. Since the subject CAMs are beta CAMs, beta values of interest are as follows:

Average: 1.9E-12 μCi/ml - 0.12 dpm/ft^3
Maximum: 1.4E-11 μCi/ml - 0.89 dpm/ft^3

Elevated Facility Emissions

The next step in establishing alarm set-points is to establish a meaningful elevated emission value. The following reference provides radionuclide vapor space data from 18 SSTs sampled back in 1982:

Characterization of Breathing, Single-Shell Tanks Radionuclide Releases, Phase I, by Dr. Ellingson, dated March 1982.

In this study, the short-lived radionuclides were allowed to decay off before the samples were analyzed. Therefore, the results provide concentrations which might exist prior to the HEPA filters under stagnant, undisturbed conditions. These values might be useful as meaningful levels and not fluctuations in background or increased radon levels which will decay away after some short period of time. The average and maximum beta concentrations seen in these samples were given as follows:

Average: 3.7E-09 μCi/ml - 233 dpm/ft^3
Maximum: 3.7E-08 μCi/ml - 2,326 dpm/ft^3

Vapor space radionuclide analysis data, which was analyzed before it decayed, also exist. This data came from a cc:mail message from John Evans to Eric Veith, "Assessment of Radiological Data Collected by VSS Sampling of SST Vapor Headspace", dated January 5, 1997, Pacific Northwest National Laboratory (PNNL), Richland, Washington. It was believed that these data might be useful in representing meaningful maximum fluctuations in background or increased radon levels. This data provided measured total alpha, beta, and Cs-137 concentrations collected on upstream filter papers used during various tank vapor sampling events. Maximum and average beta values from this data were given as follows:

Average: 1.3E-08 μCi/ml - 817 dpm/ft^3
Maximum: 9.6E-08 μCi/ml - 6,035 dpm/ft^3

CAM Minimum Detection Concentration (MDC)
MDC for the AMS 4 CAM is computed using the following equation:

$$MDC = \frac{4.65\sqrt{\text{Background Counts per Minute x Minutes}} + 3}{\varepsilon_d \text{ x } Q_s \text{ x minutes}^2}$$

where:

Q_s = sample flow-rate
ε_d = the detector efficiency

MDCs are useful in determining what concentrations the CAM will be capable of detecting after specific periods of time or how long it will take the CAM to see specific concentrations (e.g., CAM alarm set-point concentrations). Table 7-3 has been provided to illustrate this point.

Table 7-3. CAM Response Time vs. Detection Concentration

Time	Minimal Detection Concentration for a Sample Flow-Rate of 1 ft³/min., a detector efficiency of 15 percent, and a background of 50 cpm.	
minutes	*dpm/ft³*	*µCi/ml*
1	239	3.80E-09
2	82	1.30E-09
3	44	7.10E-10
4	29	4.60E-10
5	20	3.20E-10
10	7	1.10E-10
20	3	4.00E-11
30	1.4	2.20E-11
60	0.5	7.60E-12

Slow Alarm Set-Point
A slow alarm setting of 300 dpm/ft^3 with a slow alarm interval of 60 min. has been established as appropriate for use in Tank Farms for the following reasons:

Spurious alarms could occur for various reasons, one of which may be from radon decay daughter products building up on the CAM filter paper. The Rn-222 decay chain is made up of Po-218, which decays with a half-life of 3 min.; Pb-214 with a half-life of 27 min., Bi-214 with a half-life of 19.7 min., and Po-214 with a half-life of 164 micro-seconds. The time required to get through this decay chain totals 49.7 min. This means that if

Rn-222 daughters build up on the CAM collection filter, the activity level should start to level off and potentially start to drop after about 50 min. Thus, a 60 min. slow alarm interval setting would be sufficient to avoid this event.

The slow alarm set-point was set higher than the nominal Tank Farm emission values determined above to range from 3.7 to 15.1 dpm/ft^3. The alarm set-point was set to alarm at pre-HEPA filter concentration data determined to be represented in the 1982 study discussed above. These values were given to range from 233 to 2,326 dpm/ft^3.

Fast Alarm Set-Point

A fast alarm setting of 7,000 dpm/ft^3 with a fast alarm interval of 60 seconds has been established as appropriate for use in Tank Farms for the following reasons:

A 60 second fast alarm setting was chosen for no reason other than it was in between the allowed instrument settings of 5 to 255 seconds.

This fast alarm provides for faster response than the slow alarm, thus making this alarm setting more sensitive to fluctuations that might occur during elevated radon events. Possible tank radon levels were given above to range from 817 to 6,035 dpm/ft^3. It was assumed that if emissions exceeded these values, a real elevated emission event might be in progress.

Table 7-4. Summary of Emission Levels for AMS-4 CAM Alarm Set-Point Determination

Scenario	Stack Emissions (beta)	
	µCi/ml	dpm/ft^3
Nominal Emissions	1.9E-12	0.12
	1.4E-11	0.89
Potentially Undisturbed Pre-HEPA Levels	3.7E-09	233
	3.7E-08	2,326
Determined Slow Alarm Set-Point	4.8E-09	300
Estimated possible Fluctuation in Background/Radon Levels	1.3E-08	817
	9.6E-08	6,035
Determined Fast Alarm Set-Point	1.1E-07	7,000

8.0 SAMPLE ANALYSIS

Sample analysis and sample management are discussed in this section.

The analytical laboratory procedures for the FEMP activities are identified in the most recent revision of two quality assurance project plans (QAPP), and the annual statement of work (SOW) as follows:

HNF-EP-0528, "NESHAP Quality Assurance Project Plan for Radioactive Airborne Emissions"

HNF-EP-0835, "Statement of Work for Services Provided by the Waste Sampling and Characterization Facility for the Effluent and Environmental Program during Calendar Year 200X"

8.1 SAMPLE HANDLING AND ANALYSIS

This section describes sample handling and analysis requirements.

8.1.1 Sample Exchange

Sample identification is determined by the operations group taking the sample. Sample custody is transferred when the analytical laboratory receives the properly marked sample.

Laboratory personnel use the automated bar coding of air samples at Hanford (ABCASH) database to identify and track each sample. The record sampler filter paper is sent to an analytical laboratory. Health physics technicians perform the sample exchanges using procedure TF-OPS-006, "Air Sample Filter Exchange and Inspections for Record Samplers, Stack and Annulus CAMs." Record samplers and CAM systems exchanges and inspections are accomplished using the following procedures:

TF-OPS-005, "Daily CAM and Record Sampler Inspections"

TF-OPS-006, "Air Sample Filter Exchange and Inspections for Record Samplers, Stack and Annulus CAMs"

TO-OPS-013, "Inspections and Source Checks of AMS-3 CAMs and Effluent Record Samplers"

TF-OPS-014, "Inspections and Source Checks of Alpha Series CAMs and Effluent Record Samplers"

TF-OPS-015, "Inspections and Source Checks of AMS-4 Annulus Leak Detector CAMs"

TF-OPS-016, "Inspections and Source Checks of 702-AZ AMS-4 CAMs and Effluent Record Samplers"

TF-OPS-018, "Inspections and Source Checks of POR03, POR04, POR05, POR06, and POR-008 AMS-4 CAMs and Effluent Record Samplers"

TF-OPS-021, "Inspections and Source Checks of Primary Tank Exhauster, Annulus Exhauster AMS-4 CAMs and Effluent Record Samplers"

8.2 SAMPLE ANALYSIS

MDCs are provided in Table 8-2.

The analytical laboratory work provided by the Waste Sampling and Characterization Facility (WSCF) for the Environmental Compliance Program are referenced in HNF-EP-0835, latest edition. The sample and analysis requirements, composite sample reporting requirement, year-end data reporting, and laboratory procedures are described.

8.2.1 Laboratory Analysis

When the sample reaches WSCF, the record sample is held for 7 days to allow the short-lived naturally-occurring isotopes to decay. The sample is counted for alpha and beta readings. These readings are documented and placed in storage for further sampling or analysis. These samples are gathered on a quarterly basis and dissolved for radio-isotopic analysis. The results of these analyses are reported annually. The CAM samples are not treated as record samples unless specifically requested.

The sample analysis services provided by WSCF are defined in an SOW for services provided by WSCF and published annually (e.g., HNF-EP-0835).

8.3 U.S. DEPARTMENT OF ENERGY ANALYTICAL AND LABORATORY GUIDELINES

The analytical and laboratory procedures for the FEMP activities are identified in HNF-EP-0528. General requirements for laboratory procedures, data analyses, and statistical treatment are addressed in Table 8-3.

The following elements identified in DOE/EH-0173T are also addressed in HNF-EP-0528:

- Procedures preventing cross-contamination
- Documentation of methods
- Gamma emitting radionuclides
- Calibration

- Handling of samples
- Analysis method and capabilities
- Gross alpha, beta, and gamma measurements
- Direct gamma-ray spectrometry
- Beta counters
- Alpha-energy analysis
- Radiochemical separation procedures
- Reporting of results
- Counter calibration
- Inter-calibration of equipment and procedures
- Counter background
- QA.

8.4 DATA COLLECTION AND REVIEW

Tracking of radioactive airborne emissions sample data is controlled through assignment of unique electronic data processing (EDP) codes for each sample location. These EDP codes are used by WSCF personnel to report the results in accordance with the QAPP for radioactive emissions data. The Fluor Hanford, Inc. (FH) monitoring and reporting group assigns EDP codes to each discharge point monitoring and sampling units. EDP codes assigned for applicable stacks are as follows:

Table 8-1. Effluent Sampling Electronic Data Processing (EDP) Codes

Facility	Stack	Silver Zeolite EDP Code	CAM EDP Code	Record Sample EDP Code
241-AY/AZ Tank Exhauster - 702-AZ	296-A-42	E152	E153	E147
241-AN Tank Farm Exhauster - W314	296-A-44		E921	E920
241-AN Tank Farm Exhauster - W314	296-A-45		E923	E922
241-AW Tank Farm Exhauster - W314	296-A-46		E925	E924
241-AW Tank Farm Exhauster - W314	296-A-47		E927	E926
244-BX Double Contained Receiver Tank Exhauster	296-B-28		E887	E886
Portable Exhauster POR04-500 ft^3/min.	296-P-43		E048	E045
Portable Exhauster POR05-500 ft^3/min. used at AR Vault	296-P-44		E049	E046
Portable Exhauster POR06-500 ft^3/min. used at AR Vault	296-P-45		E050	E047

Facility	Stack	Silver Zeolite EDP Code	CAM EDP Code	Record Sample EDP Code
Portable Exhauster POR08-1,000 ft^3/min. used for C106 Retrieval	296-P-47		E097	E096
Portable Exhauster POR03-500 ft^3/min.	296-P-48		E099	E098
244-S Double Contained Receiver Tank Exhauster	296-S-22		W890	W880
244-TX Double Contained Receiver Tank Exhauster	296-T-18		W889	W882

Table 8-2. Minimum Quantifiable Concentrations for Specific Radionuclides as Measured in Bi-Weekly Air Samples

Radionuclide	Minimum Quantifiable Concentration (microcuries per milliliter)
Pu-239/240	2.0×10^{-15}
Pu-238	2.0×10^{-15}
Am-241	1.9×10^{-15}
Sr-90	1.9×10^{-14}
Ru\Rh-106	3.4×10^{-13}

Table 8-3. Data Analyses and Statistical Treatment

Element	Documentation
Summary of data and statistical treatment requirements	HNF-SD-CP-QAPP-017
Variability of effluent and environmental data	HNF-EP-0527-12
Summarization of data and testing for outliers	Statistical identification of control standards are performed by the Laboratory Measurement Control System database program during the annual review of data for setting control limits. Outliers are evaluated.
Treatment of significant figures	HNF-SD-CP-QAPP-017
Parent-decay product relationships	Parent-decay product relationships are not accounted for in laboratory operating procedures.
Comparisons to regulatory or administrative control standards and control data	WSCF participates in the EPA Intra-Comparison Program
Quality assurance	HNF-SD-CP-QAPP-017

9.0 NOTIFICATION AND REPORTING REQUIREMENTS

Notifications and reporting of specific events related to environmental releases and/or events involving effluents and/or hazardous materials are made according to DOE Orders 5400.5 and 232.1A, and TFC-ESHQ-ENV_FS-C-01, "Environmental Notification." Specific implementation, where required, is included in the appropriate occurrence categorization, notification, and reporting procedures.

10.0 INTERFACE WITH NEAR-FACILITY MONITORING

DOE/RL-91-50, Revision 3 documents two distinct but related components of the environmental monitoring program; environmental surveillance conducted by PNNL and effluent monitoring conducted by FH. Environmental surveillance consists of surveillance of all environmental media to demonstrate compliance with regulations. Effluent monitoring includes facility effluent monitoring (e.g. end of pipe) as well as near-facility environmental monitoring. Projected EDEs, reported in this FEMP, are the products of effluent monitoring data.

10.1 PURPOSE

The Near-Facility Monitoring Program provides facility-specific environmental monitoring to protect the environment adjacent to facilities under the responsibility of FH and to ensure compliance with federal, state, and local environmental regulations.

The objectives of near-facility monitoring are to evaluate the following:

- Compliance with DOE, EPA, Ecology, WDOH, and internal FH team environmental radiation protection requirements and guides
- Performance of radioactive waste confinement systems
- Trends of radioactive materials in the environment at and adjacent to nuclear facilities and waste disposal sites.

Specifically, near-facility monitoring is developed to:

- Monitor all inactive, existing, and new low-level waste disposal sites to assess both radiological and nonradiological hazards (DOE Order 435.1)
- Determine the effectiveness of effluent treatment and controls in reducing effluents and emissions (DOE/EH-0173T)
- Detect and quantify unplanned releases (DOE/EH-0173T, 40 CFR 302, WAC 173-303-145, and DOE Orders 231.1A)
- Monitor fugitive emissions and diffuse sources from contaminated areas for compliance with NESHAPs (40 CFR 61, DOE/EH-0173T and WAC 246-247), Toxic Air Emissions Inventory (40 CFR 265, Subparts AA & B13), state AOP program (40 CFR 70, WAC 173-401)
- Monitor all surplus facilities before decontaminating or decommissioning (DOE Order 435.1)

- Monitor new and existing sites, processes, and facilities for potential impacts and releases (DOE Order 231.1A and DOE/EH-0173T)

- Monitor and assess radioactive contamination and potential exposure to employees and the public (DOE Orders 5400.5, 231.1, DOE/EH-0173T and 10 CFR 835).

Near-facility monitoring provides a level of assurance to FH that the effluent and contamination controls for the various facilities and waste sites are effective.

10.2 MEDIA SAMPLED

Media include ambient air, surface water, groundwater, external radiation dose, soil, sediment, vegetation, and animals at or near active and inactive facilities and/or waste sites. Parameters monitored include the following, as needed: pH, water temperature, radionuclides, radiation exposure, and hazardous constituents. Animals that are not contaminated, as determined by a field instrument survey, are released to a nonhazardous environment.

Samples are collected from known or suspected effluent pathways (e.g., downwind of potential releases, liquid streams, or proximal to release points). To avoid duplication, FH relies on existing sample locations where PNNL previously established sample sites (e.g., air samplers in the 300 Area). Animal samples are collected at or near facilities and/or waste sites.

Surveys to detect surface radiological contamination are conducted near and on liquid waste disposal sites (e.g., cribs, trenches, drains, retention basin perimeters, pond perimeters, and ditch banks), solid waste disposal sites (e.g., burial grounds and trenches), unplanned release sites, Tank Farm perimeters, stabilized waste disposal sites, roads, and firebreaks. There are multiple sites where radiological surveys are conducted in the 100 Areas, the 200/600 Areas, and in the 300/400 Areas.

Near-facility monitoring will be reviewed at least annually to determine that the appropriate effluents are being monitored and that the monitor locations are in position to best determine potential releases.

10.3 COMMUNICATION

FH and PNNL compare and communicate results of their respective monitoring programs at least quarterly and as soon as possible under upset conditions.

Results of near-facility monitoring are published in annual reports. The radionuclide values in these reports are expressed in curies, or portions thereof, for each radionuclide per unit weight of sample (e.g., picocuries per gram) or in field instrument values (e.g., cpm). Values are reported in this manner, rather than EDE, which is calculated as the summation of the products of the dose equivalent received by specified tissues of the body and a tissue-specific weighting factor.

11.0 QUALITY ASSURANCE

HNF-EP-0528 describes the QA requirements associated with NESHAP compliance. The QAPP is consistent with the requirements in 10 CFR 830, NQA-1, and EPA QA/R-5. QA requirements in 40 CFR 61, Appendix B, Method 114, are discussed RPP-QAPP-004, *CHG Quality Assurance Program Plan for Tank Farm Contractor Radioactive Air Emissions.*

11.1 OBJECTIVE

The objective of this plan is to document and describe QA requirements for facilities implementing the FEMPs.

11.2 REQUIREMENTS

HNF-EP-0528-5 has been developed to implement the overall QA program requirements for radioactive airborne emissions data collection and reporting activities. The QAPP applies specifically to field activities, laboratory analyses, and continuous monitoring performed for all FH managed facilities.

12.0 INTERNAL AND EXTERNAL PLAN REVIEW

This FEMP should be reviewed and updated as necessary after each major change or significant facility modification.

FH prepares an annual effluent discharges report for each area on the Hanford Site to cover both airborne and liquid release pathways. In addition, a report on the air emissions and compliance to the NESHAP is prepared by FH and submitted to the EPA as well as DOE Headquarters.

Facility management is required to approve all changes to the FEMPs, including those generated during reviews and updates. CH2M HILL is responsible for assigning appropriate personnel to perform the document reviews, assessments, and approvals as necessary, to ensure program integrity.

13.0 REFERENCES

3-VBP-155, 2004, 2004, Tank Farms Maintenance Procedure, *Air Flow Test For Tank Farm Stacks and Ducts*, Rev C-2 (1/22/04), CH2M HILL Hanford Group, Inc., Richland, Washington.

3-VB-155I, 2004, Tank Farms Maintenance Procedure, *244-BX DCRT Exhauster Stack 296-B-28 Air Flow Test Data Sheets*, Rev C-0, Appendix I (5/18/04), CH2M HILL Hanford Group, Inc., Richland, Washington.

3-VB-155J, 2003, Tank Farms Maintenance Procedure, *244-S DCRT Exhauster Stack 296-S-22 Air Flow Test Data Sheets*, Rev C-1, Appendix J (9/3/03), CH2M HILL Hanford Group, Inc., Richland, Washington.

3-VB-155K, 2003, Tank Farms Maintenance Procedure, *244-TX DCRT Exhauster Stack 296-T-18 Air Flow Test Data Sheets*, Rev C-2, Appendix K (9/4/03), CH2M HILL Hanford Group, Inc., Richland, Washington.

3-VB-155O, 2004, Tank Farms Maintenance Procedure, *241-AY/AZ Tank Exhaust Stack 296-A-42 Air Flow Test Data Sheets*, Rev B-7, Appendix O (7/15/04), CH2M HILL Hanford Group, Inc., Richland, Washington.

3-VB-155U, 2003, Tank Farms Maintenance Procedure, *1000 CFM Portable Exhauster 296-P-47 POR-008 Air Flow Test Data Sheets*, Rev C-0, Appendix U (7/8/03), CH2M HILL Hanford Group, Inc., Richland, Washington.

3-VB-155V, 2003, Tank Farms Maintenance Procedure, *500 CFM Portable Exhauster POR04-VTP/SKID B Air Flow Test Data Sheets*, Rev B-0, Appendix V (8/5/03), CH2M HILL Hanford Group, Inc., Richland, Washington.

3-VB-155W, 2003, Tank Farms Maintenance Procedure, *500 CFM Portable Exhauster Stack 296-P-44 (POR05/SKID C Air Flow Test Data Sheets*, Rev B-0, Appendix W (10/5/03), CH2M HILL Hanford Group, Inc., Richland, Washington.

3-VB-155X, 2003, Tank Farms Maintenance Procedure, *500 CFM Portable Exhauster POR03 Air Flow Test Data Sheets*, Rev A-1, Appendix X (8/28/03), CH2M HILL Hanford Group, Inc., Richland, Washington.

3-VB-155Y, 2004, Tank Farms Maintenance Procedure, *500 CFM Portable Exhauster Stack 296-P-45 (POR06/Skid D) Air Flow Test Data Sheets*, Rev B-0, Appendix Y (2/12/04), CH2M HILL Hanford Group, Inc., Richland, Washington.

3-VB-155ZA, 2004, Tank Farms Maintenance Procedure, *241-AN Exhauster Stack 296-A-44 Air Flow Test Data Sheets*, Rev A-1, Appendix ZA (7/15/04), CH2M HILL Hanford Group, Inc., Richland, Washington.

3-VB-155ZB, 2004, Tank Farms Maintenance Procedure, *241-AN Exhauster Stack 296-A-45 Air Flow Test Data Sheets*, Rev A-1, Appendix ZB (7/15/04), CH2M HILL Hanford Group, Inc., Richland, Washington.

3-VB-155ZC, 2004, Tank Farms Maintenance Procedure, *241-AW Exhauster Stack 296-A-46 Air Flow Test Data Sheets*, Rev A-1, Appendix ZC (7/15/04), CH2M HILL Hanford Group, Inc., Richland, Washington.

3-VB-155ZD, 2004, Tank Farms Maintenance Procedure, *241-AW Exhauster Stack 296-A-47 Air Flow Test Data Sheets*, Rev A-1, Appendix ZD (7/15/04), CH2M HILL Hanford Group, Inc., Richland, Washington.

6-FCD-077, 2003, Tank Farms Maintenance Procedure, *Stack Sampling, Monitoring and Annulus CAM Enclosure System*, Rev D-5 (10/29/03), CH2M HILL Hanford Group Inc., Richland, Washington

6-FCD-385, 2004, Tank Farms Maintenance Procedure, *Calibrate MASS-Tron II Flow Indicator*, Rev B-8 (1/29/04), CH2M HILL Hanford Group Inc., Richland, Washington

6-FCD-569, 2004, Tank Farms Maintenance Procedure, *ANSI N13.1 Compliance for Portable Exhausters*, Rev B-0 (4/27/04), CH2M HILL Hanford Group Inc., Richland, Washington

6-FCD-648, 2004, Tank Farms Maintenance Procedure, *Calibrate Hastings HFC-303 Flow Controller on AN and AW HVAC*, Rev A-0 (5/13/04), CH2M HILL Hanford Group Inc., Richland, Washington

6-GENI-135, 2004, Tank Farms Maintenance Procedure, *Generic Calibration of Digital Indicators*, Rev D-0, (3/22/04), CH2M HILL Hanford Group Inc., Richland, Washington

6-PCD-373, 2003, Tank Farms Maintenance Procedure, *Yokogawa Instruments EJA 110 & 120 Differential Pressure Transmitter*, Rev A-9 (10/27/03), CH2M HILL Hanford Group Inc., Richland, Washington

6-PCD-521, 2004, Tank Farms Maintenance Procedure, *Calibrate Hastings HFC-203 Controller*, Rev B-1 (7/15/04), CH2M HILL Hanford Group Inc., Richland, Washington

6-VT-257, 2004, Tank Farms Maintenance Procedure, *Linear Integrating Totalizer Calibration Moore Industries Model Lit*, Rev B-0 (4/5/04), CH2M HILL Hanford Group Inc., Richland, Washington

10 CFR 830.120, "Quality Assurance Requirements," *Code of Federal Regulations*, as amended.

40 CFR 52, Appendix E, "Performance Specifications and, Specification Test Procedures for Monitoring Systems for Effluent Stream Gas Volumetric Flow Rate," *Code of Federal Regulations*, as amended.

40 CFR 60, Appendix A, "Test Methods," *Code of Federal Regulations*, as amended.

40 CFR 61, Subpart H, "National Emission Standards for Emissions of Radionuclides Other Than Radon From Department of Energy Facilities," *Code of Federal Regulations*, as amended.

40 CFR 70, "State Operating Permit Programs," *Code of Federal Regulations*, as amended.

40 CFR 261, "Identification and Listing of Hazardous Waste," *Code of Federal Regulations*, as amended.

40 CFR 265, "Interim Status for Owners and Operators of Hazardous Waste Treatment, Storage, and Disposal Facilities," *Code of Federal Regulations*, as amended.

40 CFR 302, "Designation, Reportable Quantities, and Notification Requirements," *Code of Federal Regulations*, as amended.

40 CFR 355, "Emergency Planning and Notification," *Code of Federal Regulations*, as amended.

ANSI N13.1-1969, *American National Standard Guide to Sampling Airborne Radioactive Materials in Nuclear Facilities*, American National Standards Institute, Inc., New York, New York.

ANSI N13.1-1999, *American National Standard Sampling and Monitoring Releases of Airborne Radioactive Substances From the Stacks and Ducts of Nuclear Facilities*, ANSI/HPS N13.1-1999, American National Standards Institute, New York, New York..

ANSI N42.18-1974, *American National Standard Specification and Performance of On-Site Instrumentation for Continuously Monitoring Radioactivity in Effluents*, latest edition, American National Standards Institute, New York, New York.

ANSI N323, *Radiation Protection Instrumentation Test and Calibration*, American National Standards Institute, New York, New York.

Atomic Energy Act of 1954, as amended, Public Law-83-703, 66 Statute 919, 42 USC 2011.

Benton Clean Air Authority, Regulation 1, Kennewick, Washington.

DOE 1977, *U.S. Department of Energy Organization Act of 1977*, United States Department of Energy, Washington, D.C.

DOE/EH 173T, Environmental Regulatory Guide for Radiological Effluent Monitoring and Environmental Surveillance, U.S. Department of Energy, Washington, D.C.

DOE Order 435.1, *Radioactive Waste Management*, U.S. Department of Energy, Washington, D.C.

DOE Order 450.1, *Environmental Protection Program*, U.S. Department of Energy, Washington, D.C.

DOE Order 5400.5, *Radiation Protection of the Public and the Environment*, U.S. Department of Energy, Washington, D.C.

DOE Order 231.1A, *Environment, Safety and Health Reporting*, U.S. Department of Energy, Washington, D.C.

DOE/RL-91-50, *Environmental Monitoring Plan*, U.S. Department of Energy, Richland Operations Office, Richland, Washington.

DOE/RL-2001-32, *Radionuclide Air Emissions Report for the Hanford Site Calendar Year 2000*, June 2001, U.S. Department of Energy, Richland Operations Office, Richland, Washington.

DOE/RL-2002-20, *Radionuclide Air Emissions Report for the Hanford Site Calendar Year 2001*, June 2002, U.S. Department of Energy, Richland Operations Office, Richland, Washington.

DOE/RL-2003-19, *Radionuclide Air Emissions Report for the Hanford Site Calendar Year 2002*, June 2003, U.S. Department of Energy, Richland Operations Office, Richland, Washington.

DOE/RL-2004-09, *Radionuclide Air Emissions Report for the Hanford Site Calendar Year 2003*, June 2004, U.S. Department of Energy, Richland Operations Office, Richland, Washington.

Fluor Hanford, Regulatory Analysis Memorandum 03-001, June 3, 2003, Determining options for compliance with the sample system inspection requirements of the 40 CFR 61, Subpart H, Method 114, Section 4, QA methods, Table 2 "Maintenance, Calibration and Field Check Requirements"

HNF-1974, 2003, "Radionuclide National Emission Standards for Hazardous Air Pollutants Potential-to-Emit Assessment," Rev. 1, Fluor Hanford, Inc., Richland, Washington.

HNF-3602, 2002 "Calculating Potential to Emit Releases and Doses for FEMPS and NOC's," Rev. 1, Fluor Hanford, Inc., Richland, Washington.

HNF-EP-0528-5, 2003, "NESHAP Quality Assurance Project Plan for Radioactive Air Emissions," Rev. 5, Fluor Hanford, Inc., Richland, Washington.

HNF-EP-0835-9, 2003, "Statement of Work for Services Provided by the Waste Sampling and Characterization Facility for the Effluent and Environmental Compliance Program during Calendar Year 2003," Rev. 0, Fluor Hanford, Inc., Richland, Washington.

HNF-SD-CP-QAPP-017, 2003, "Waste Sampling Characterization Facility Quality Assurance Plan," current revision, Fluor Hanford, Inc., Richland, Washington.

HNF-SD-WM-EMP-031, 1997, "Tank Farm Stack NESHAP Designation Determinations," current revision, Lockheed Martin Hanford Company, Richland, Washington.

Safe Drinking Water Act of 1974, 42 USC 300f et seq.

Superfund Amendment and Reauthorization Act of 1986, 42 USC 11001 et seq.

Tank Waste Information Network System (TWINS), internet address: http://twins.pnl.gov/twins.htm.

TF-OPS-005, 2004, Tank Farms Operating Procedure, *Daily CAM and Record Sampler Inspections*, Rev E-12 (6/14/04), CH2M HILL Hanford Group, Inc., Richland, Washington.

TF-OPS-006, 2004, Tank Farms Operating Procedure, *Air Sample Filter Exchange and Inspections for Record Samplers, Stack and Annulus CAMs*, Rev C-0, (6/9/04), CH2M HILL Hanford Group, Inc., Richland, Washington.

TF-OPS-013, 2004, Tank Farms Operating Procedure, *Inspections and Source Checks of AMS-3 CAMs and Effluent Record Samplers*, Rev A-7 (5/5/04), CH2M HILL Hanford Group, Inc., Richland, Washington.

TF-OPS-014, 2004, Tank Farms Operating Procedure, *Inspections and Source Checks of Alpha Series CAMs and Effluent Record Samplers*, Rev A-6 (4/28/04), CH2M HILL Hanford Group, Inc., Richland, Washington.

TF-OPS-015, 2004, Tank Farms Operating Procedure, *Inspections and Source Checks of AMS-4 Annulus Leak Detector CAMs*, Rev A-6 (5/5/04), CH2M HILL Hanford Group, Inc., Richland, Washington.

TF-OPS-016, 2004, Tank Farms Operating Procedure, *Inspections and Source Checks of 702-AZ AMS-4 CAMs and Effluent Record Samplers*, Rev A-5 (4/28/04), CH2M HILL Hanford Group, Inc., Richland, Washington.

TF-OPS-018, 2004, Tank Farms Operating Procedure, *Inspections and Source Checks of POR03, POR04, POR05, POR06, and POR-008 AMS-4 CAMs and Effluent Record Samplers*, Rev B-3, (4/28/04), CH2M HILL Hanford Group, Inc., Richland, Washington.

TF-OPS-021, 2004, Tank Farms Operating Procedure, *Inspections and Source Checks of Primary Tank Exhauster, Annulus Exhauster AMS-4 CAMs and Effluent Record Samplers*, Rev A-7 (5/5/04), CH2M HILL Hanford Group, Inc., Richland, Washington.

WAC 173-200, "Water Quality Standards for Ground Waters of the State of Washington," *Washington Administration Code*, as amended.

WAC 173-216, "State Waste Discharge Permit Program," *Washington Administrative Code*, as amended.

WAC 173-220, "National Pollutant Discharge Elimination System Permit Program," *Washington Administrative Code*, as amended.

WAC 173-303, "Dangerous Waste Regulations," *Washington Administrative Code*, as amended.

WAC 173-400, "General Regulations for Air Pollution Sources," *Washington Administrative Code*, as amended.

WAC 173-401, "Operating Permit Regulation," *Washington Administrative Code*, as amended.

WAC 173-460, "Controls for New Sources of Toxic Air Pollutants," *Washington Administrative Code*, as amended.

WAC 173-480, "State Ambient Air Quality Standards and Emission Limits for Radionuclides," *Washington Administrative Code*, as amended.

WAC 246-247, "Radiation Protection--Air Emissions," *Washington Administrative Code*, as amended.

Washington Clean Air Act of 1967, RCW 70.94, as amended.

WHC-SD-WM-EMP-034, 1996, "Basis for Tank Farm Airborne Effluent Continuous Air Monitor Alarm Set Points," Westinghouse Hanford Company, Richland, Washington.

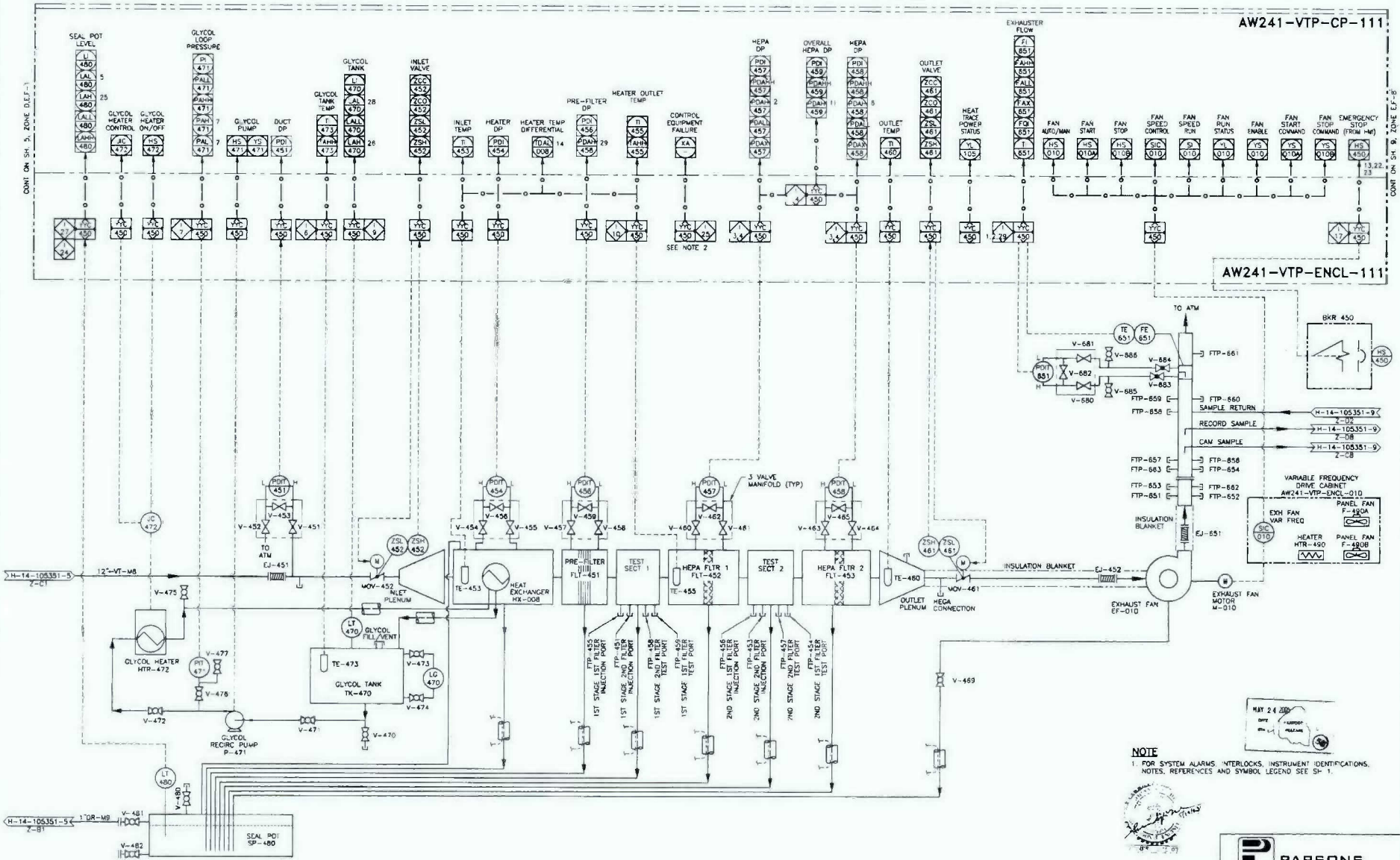

NOTE

1. FOR SYSTEM ALARMS, INTERLOCKS, INSTRUMENT IDENTIFICATIONS, NOTES, REFERENCES AND SYMBOL LEGEND SEE SH 1.

DRAWING TRACEABILITY LIST			
DWG NO	TITLE	REF NUMBER / REFERENCES	TITLE / NEXT USED ON

REVISIONS

PARSONS

W-314, TANK FARM RESTORATION AND SAFE OPERATIONS

U.S. DEPARTMENT OF ENERGY
Office of River Protection

P&ID
241-AW HVAC
EXHAUSTER TRAIN "B"

NAME	DATE
R. W. SCHROEDER	
N/A	
N/A	
N/A	

SIZE	SYSTEM	SEQ	DWG NO	REV
F	241-AW	7004	H-14-105351	0

SCALE: NONE