This document was too large to scan as a single document. It has been divided into smaller sections.

Section 3 of 5

Document Information			
Document #	ISO-100	Revision	
Title	WASTE MANAGEMENT TECHNICAL MANUAL		
Date	08/31/1967		
Originator	J.S. BUCKINGHAM	Originator Co.	ISOCHEM
Recipient		Recipient Co.	
References			
Keywords			
Projects			
Other Information			

BEST AVAILABLE COPY

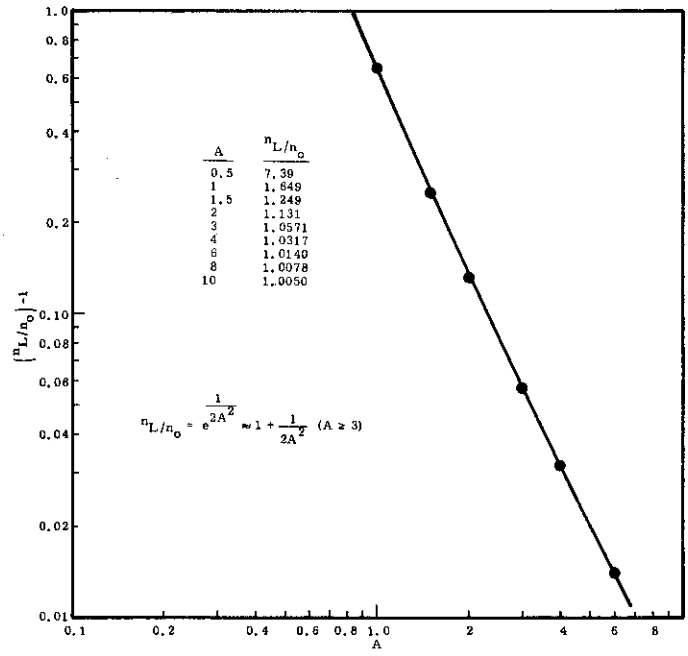

FIGURE IV-70

n_L/n_o As a Function of A

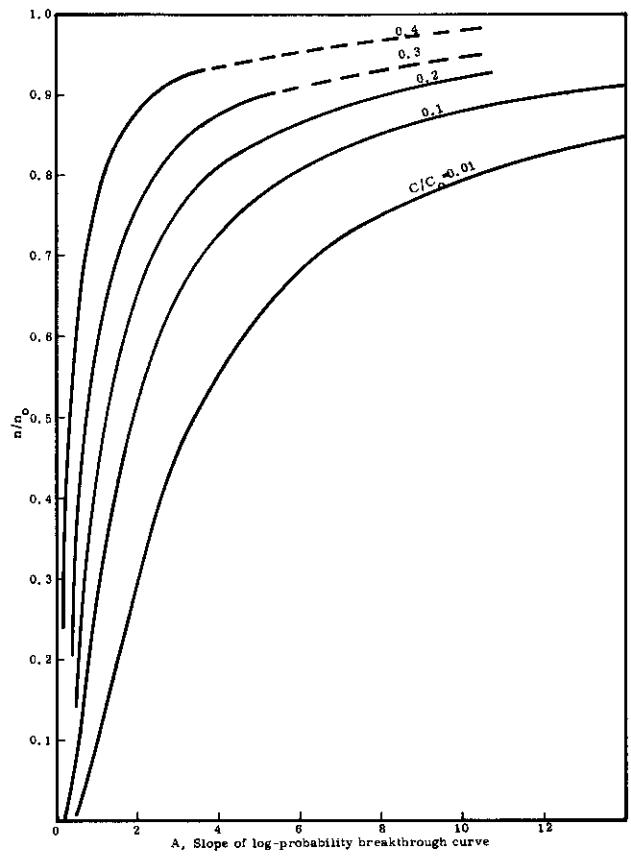

FIGURE IV-71

Cross Plot of Figure IV-67

The elution curve approaches a straight line in this semilog plot at elution volumes greater than 4 column volumes. The slope of this line, k, is given by Equation (15):

$$k = \frac{-\log(C_2/C_1)}{n_2-n_1} = \frac{-\log(0.0017/0.0056)}{7-5} = 0.26$$

The average concentration of cesium left on the bed after 7 column volumes of eluate are collected is given by Equation (16):

$$\frac{Y}{v} = \frac{C_2}{2.3k} = \frac{0.0017}{(2.3)(0.26)} = 0.0028 \frac{\text{mole Cs}}{\text{of bed}}$$

The initial cesium loading was about 0.07 mole/ ; thus the cesium left on the bed after 7 column volumes represents 4 percent of the cesium loaded.

The column volumes required to lower the cesium content to 1 percent of that loaded can be estimated by letting $Y/v = (0.01)(0.07) = 0.0007$. From Equation (16), $C = 2.3k(Y/v) = 0.000419$. From Equation (15),

$$n-n_2 = \frac{1}{k}\log(C/C_2)$$

$$n = \frac{1}{0.26}\log\frac{0.000419}{0.0017} = 9.3 \text{ column volumes.}$$

3.3 Pressure Drop

Pressure-drop data on the flow of fluids through beds of granular solids are not readily correlated because of the variety of granular materials and of their packing arrangement. For laminar flow of a single incompressible fluid through a given bed of granular solids, the pressure drop can be expressed empirically in terms of solution viscosity and superficial flow rate by the equation

$$\frac{\Delta P}{L} = K_f \mu V \qquad (18)$$

where ΔP = pressure drop, psi

L = bed depth, ft

μ = solution viscosity, centipoise

V = superficial flow rate, gal/min-ft^2 (equivalent to the linear solution velocity calculated as if the column were empty; the velocity in inches/min times 0.623 or cm/min times 0.245 equals V in gal/min-ft^2)

K_f = an empirical constant, consistent units.

The constant, K_f, is a function of particle shape, size, and packed density and can best be determined in a laboratory column using a bed similar to the one to be used in the production plant. Some representative values of K_f have been determined, as follows:

TABLE IV-53

EMPIRICAL CONSTANTS FOR DETERMINING PRESSURE DROPS IN BEDS OF ION EXCHANGE MATERIAL

Material	Mesh Size	K_f, $\frac{\text{lb-ft-min}}{\text{cp-gal-in}^2}$	Reference
Dowex 50	20-50	0.10	(6)
Dowex 50	50-100	1.06	(6)
Permutit SK	20-50	0.10	(17)
Linde AW-500	20-50	0.095	(24)
Decalso	20-50	0.09	(5)
Clinoptilolite	20-40	0.11	(4)
Duolite C-3	20-40	0.013	(10)
Duolite C-3	20-60	0.15	(10)

Equation (18) holds only in the laminar flow region (up to modified Reynold's numbers of 10). Anticipated B-Plant flow rates fall well within this range.

3.4 Fluidization

Upflow through the packed bed will tend to fluidize the particles. Onset of fluidization occurs when the forces tending to raise the par-

ticles (buoyancy plus frictional drag) are equal to the total weight of the particles. The pressure drop where this occurs is

$$\frac{\Delta P}{L} = 0.43\ (\rho_s - \rho)\ (1 - \epsilon) \tag{19}$$

where ρ_s = particle density*, g/cm^3

ρ = solution density, g/cm^3

ϵ = fraction void volume in the bed

The flowrate at the onset of fluidization can be determined by equating Equations (18) and (19) to give

$$V_{mf} = \frac{0.43\ (\rho_s - \rho)\ (1 - \epsilon)}{K_f\ \mu} \tag{20}$$

where V_{mf} = minimum fluidizing velocity, gal/min-ft^2.

Increasing the flow rate will expand the bed proportionately to the velocity until the superficial velocity of the fluid exceeds the free-settling velocity of the solid particles. At this point the particles in the bed no longer maintain an "interface" with the fluid but will move in the direction of the fluid.

Terminal settling rates for spherical particles are presented in Perry's Chemical Engineers' Handbook[19] as a function of particle size. For 50 mesh particles of density 1.25 g/cm^3 settling in water, the terminal velocity is 0.03 ft/sec. The corresponding minimum superficial fluid velocity which would just prevent settling in an infinitely expanded bed would be 13 gal/min-ft^2. The settling rate is directly proportional to the density difference between the particle and fluid, so increasing the particle density in the above example to 1.5 would approximately double the settling rate.

Fluidization with water was briefly studied in a 4-in. diameter Lucite column using 20 to 50 mesh clinoptilolite[4]. The bed was 20 percent expanded at a flow rate of 7 gpm/ft^2. The expansion was linear with flow rates up to 15.5 gpm/ft^2, where the bed was completely fluidized.

* The weight contributed by the internal liquid must be considered. The particle densities given in Tables IV-51 and IV-52 were, respectively, for dry zeolites and water-soaked resins.

4. Recovery of Cesium from Stored Supernates

4.1 Introduction

The high cesium selectivity of certain mineral and organic cation exchangers will be utilized to remove cesium from stored alkaline supernates. Currently, two zeolites - Linde AW-400 and AW-500 - are favored for Purex supernate (PSN) and an organic exchanger - Duolite C-3 - is favored for treating Redox supernate (RSN). Typical flowsheets for the two supernatant wastes are shown in Figures IV-72 and IV-73[21]. The processes are similar and involve the following steps:

1. The supernatant solution, clarified and diluted as necessary for solution stability, is passed through the conditioned ion exchange bed until a pre-determined cesium breakthrough level is reached.

2. The column is flushed with water or dilute NaOH to remove supernatant solution. (This step may be essential only for Redox supernatant to avoid aluminum precipitation on the succeeding elution step.)

3. Sodium is selectively eluted with 0.2M $(NH_4)_2CO_3$ - 0.1M NH_4OH.

4. The cesium is eluted at 55 C with 4 to 8M NH_4^+ with about 75 percent of the NH_4^+ added as $(NH_4)_2CO_3$ and 25 percent added as NH_4OH.

5. The column is reconditioned by flushing excess ammonia ion from the column with water or, in the use of Redox waste, by eluting the ammonium ion with 1M NaOH to prevent aluminum precipitation in the succeeding loading cycle.

6. The cesium product is concentrated, and the distilled ammonium carbonate eluant is recovered by condensation and absorption of the distillate. Ammonia and CO_2 are added as necessary to maintain the desired eluant concentration.

The ion exchange portions of the flowsheets are carried out at flow rates of 50 gal/min (about 2 column volumes/hr and 2 gal/min-ft^2) at ambient temperatures, except for elution which is more efficient at higher temperatures.

The laboratory and engineering development work that led to the selected flowsheets are described in the following sections.

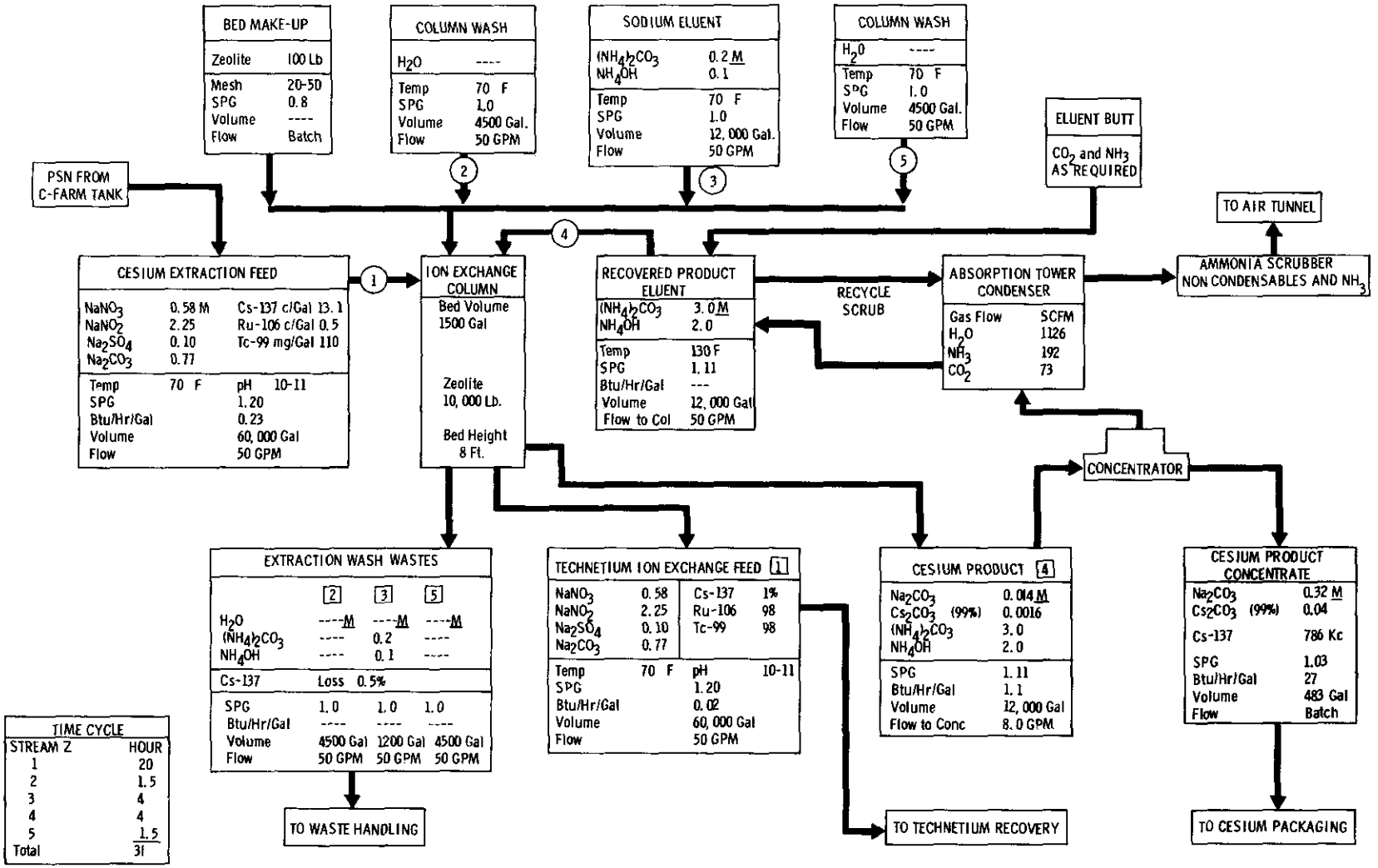

FIGURE IV-72

Cesium Recovery from Purex Alkaline Supernatant by Linde AW-500 Zeolite Ion Exchange
(Source of Data: HW-78061)

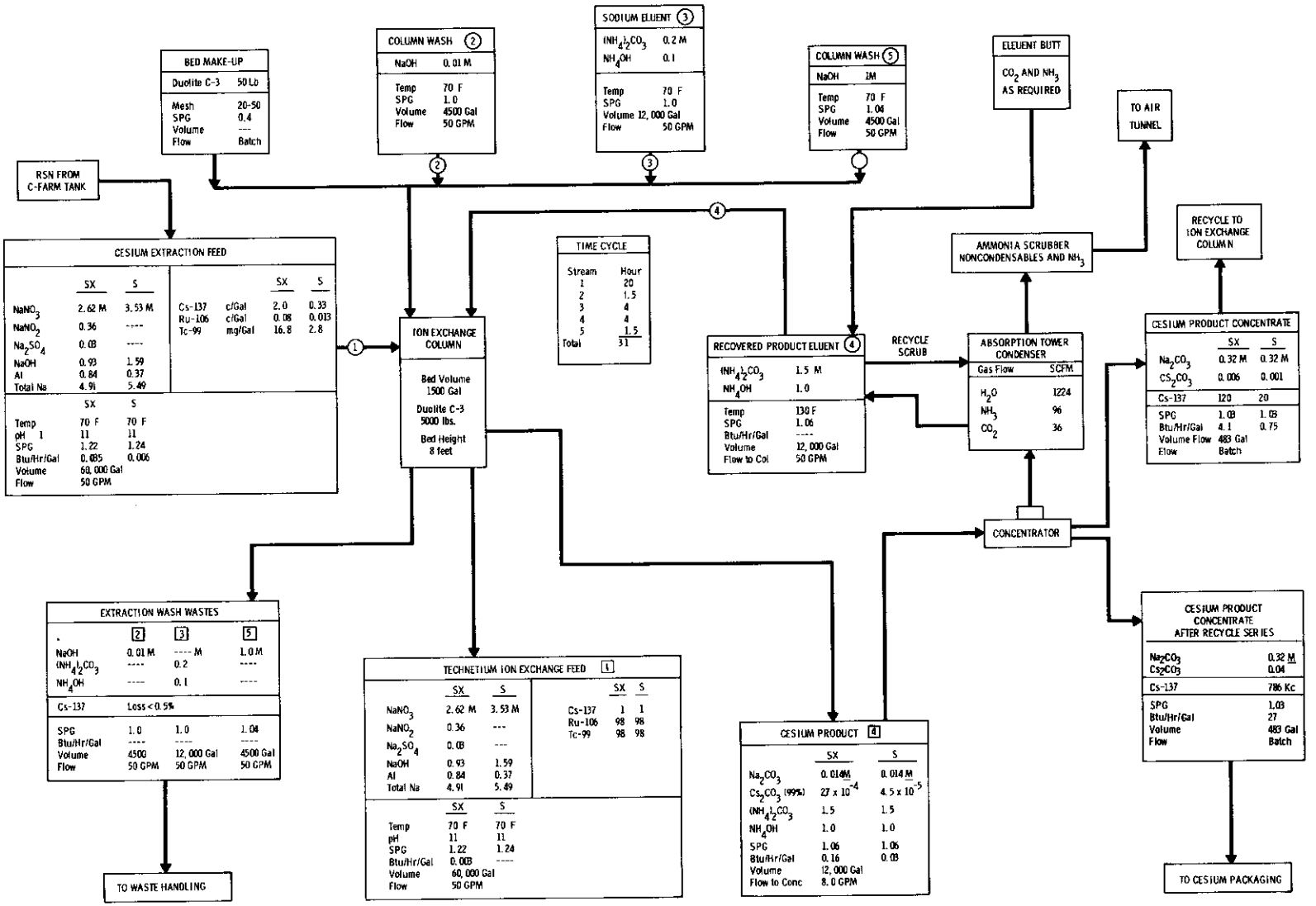

FIGURE IV-73

Cesium Recovery from Redox Alkaline Supernatant by Duolite C-3 Ion Exchange
(Source of Data: HW-78061)

4.2 Loading Studies

4.2.1 Equilibrium Data

The equilibrium loading characteristics and exchange capacities of several natural and synthetic zeolites have been determined for binary systems of cesium, strontium, and other cations found in separations plant wastes[2,14]. The equilibrium data for three candidate zeolites, shown in Figures IV-74, IV-75 and IV-76, have been correlated by use of the mass action law quotient, as discussed in Section F 1. The equilibrium cesium loading on a zeolite column can be determined from these figures when the feed composition is known. For a simple two-component feed, the equilibrium fraction of cesium on the zeolite is given by

$$Cs_z = \frac{K_B^{Cs} \frac{(Cs^+)}{(B^+)}}{1 + K_B^{Cs} \frac{(Cs^+)}{(B^+)}} \quad . \qquad (21)$$

A multicomponent mixture of mono-valent ions can be treated as several binary systems, using the technique described in Section F 1. Thus,

$$Cs_z = \frac{1}{\frac{(B^+)}{K_B^{Cs}\ (Cs^+)} + \frac{(C^+)}{K_C^{Cs}\ (Cs^+)} + \ldots} \quad . \qquad (22)$$

The equilibrium data shown in the above figures was obtained at 25 to 27 C with 20 to 50 mesh crushed and sieved zeolites and at total solution normalities of 0.1 to 1. Over this range of normalities, the total solution normality had little effect on the equilibrium distribution, but extrapolation of the data to higher solution normalities may introduce some error. Column loading studies, however, show the error to be slight for synthetic supernatant solutions up to 5M Na^+.

Increased temperature had a significant adverse effect on the equilibrium cesium loading from sodium solutions. This effect is caused by partial dehydration of the sodium ions at elevated temperatures which in turn increases their ability to compete for zeolite exchange sites with the essentially unhydrated cesium ions[15].

Most of the cesium-bearing solutions to be processed in B-Plant contain only trace quantities of monovalent ions other than sodium and cesium. Where this is true, only the binary cesium-sodium equilibrium need be considered (see Section F 4.2.2). The Cs-Na data in Figures IV-74, IV-75, and IV-76 have been replotted in Figures IV-77 and IV-78

in a more usable form. Figure IV-77 represents the cesium/sodium mole ratio on the three zeolites as a function of the Cs^+/Na^+ mole ratio in the feed. In Figure IV-78, the equilibrium fraction of cesium on the zeolite has been converted to the equilibrium loading in moles of cesium per liter of packed bed, using a packed bed density of 0.8 g/ml and the zeolite capacity presented in Table IV-51. The equilibrium capacity of Decalso is also indicated in Figure IV-78 for reference since Decalso has also been extensively used to adsorb cesium from stored supernates(12,27).

4.2.2 Sample Calculation: Estimation of Cesium Equilibria in the Presence of Competing Cations

A typical supernate feed is that used by Popovich in cold pilot plant studies (Table IV-54). Mass action quotients for loading the competing cations Cs^+, Rb^+, and K^+ from this sodium-based feed onto Linde AW-500 can be estimated from the data in Figure IV-76.

$$\frac{(Cs^+)}{(Rb^+)} = \frac{0.00076}{0.00019} = 4.0, \text{ and } K_{Rb}^{Cs} = 1.2.$$

$$\frac{(Cs^+)}{(K^+)} = \frac{0.00076}{0.00060} = 1.3, \text{ and } K_{K}^{Cs} = 2.3.$$

$$\frac{(Cs^+)}{(Na^+)} = \frac{0.00076}{4.37} = 0.00017, \text{ and } K_{Na}^{Cs} = 190.$$

From Equation (22), the equivalent fraction of Cs on the zeolite in equilibrium with this feed is given by

$$Cs_z = \frac{1}{1 + \frac{0.00019}{(0.00076)(1.2)} + \frac{0.00060}{(0.00076)(2.3)} + \frac{4.37}{(0.00076)(190)}} = 0.031$$

The equivalent fractions of Rb and K can be estimated from the respective mass action quotients and Cs_z:

$$Rb_z = \frac{(Cs_z)(Rb^+)}{(Cs^+)(K_{Rb}^{Cs})} = \frac{(0.031)(0.00019)}{} = 0.0065$$

$$\text{and } K = \frac{(0.031)(0.00060)}{(0.00076)(2.3)} = 0.011.$$

If the effect of trace competing cations on cesium loading is neglected, Equation (21) or Figure IV-27 may be used to estimate equilibrium cesium loading.

Thus,

$$Cs_z = \frac{K_{Na}^{Cs} \frac{Cs^+}{Na^+}}{1 + K_{Na}^{Cs} \frac{Cs^+}{Na^+}} = \frac{(190)(0.00017)}{1 + (190)(0.00017)} = 0.031.$$

This answer is the same as that determined previously, thus confirming that interference from trace element loading can safely be ignored.

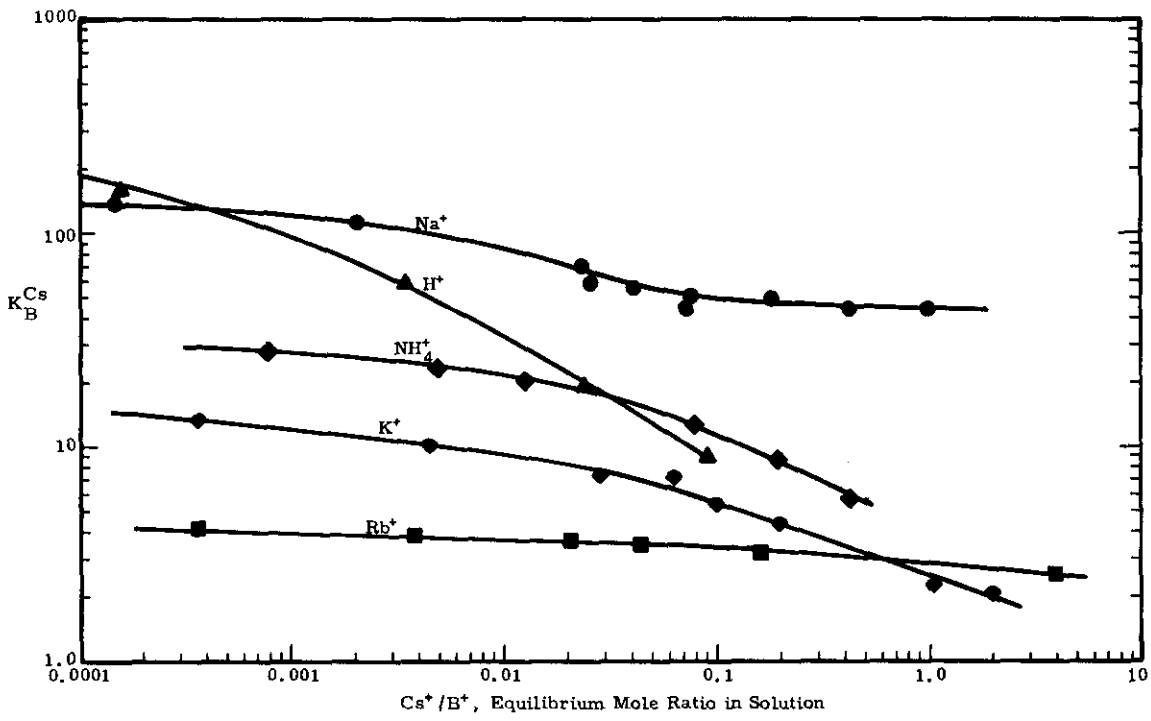

FIGURE IV-74

Mass Action Quotients for the Exchange of Cesium With Sodium, Potassium, Rubidium, Ammonium and Hydrogen Form Clinoptilolite (Source of Data: HW-74609 and HW-78461)

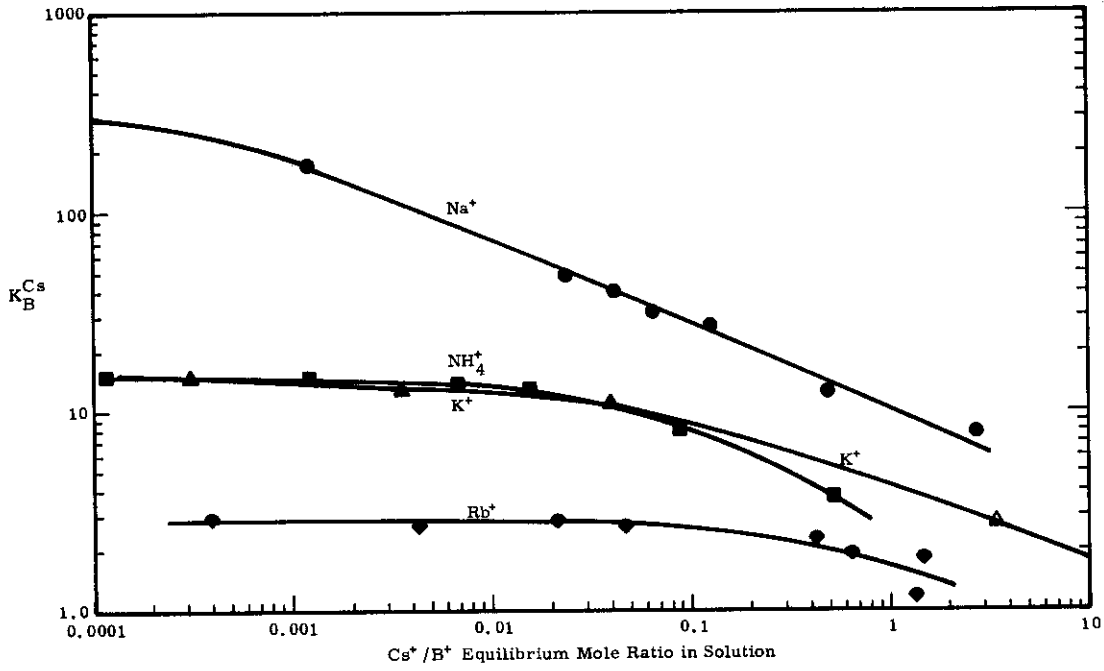

FIGURE IV-75

Mass Action Quotients for the Exchange of Cesium With Sodium, Potassium, Rubidium, and Ammonium Form Linde AW-400 (Source of Data: HW-74609 and HW-78461)

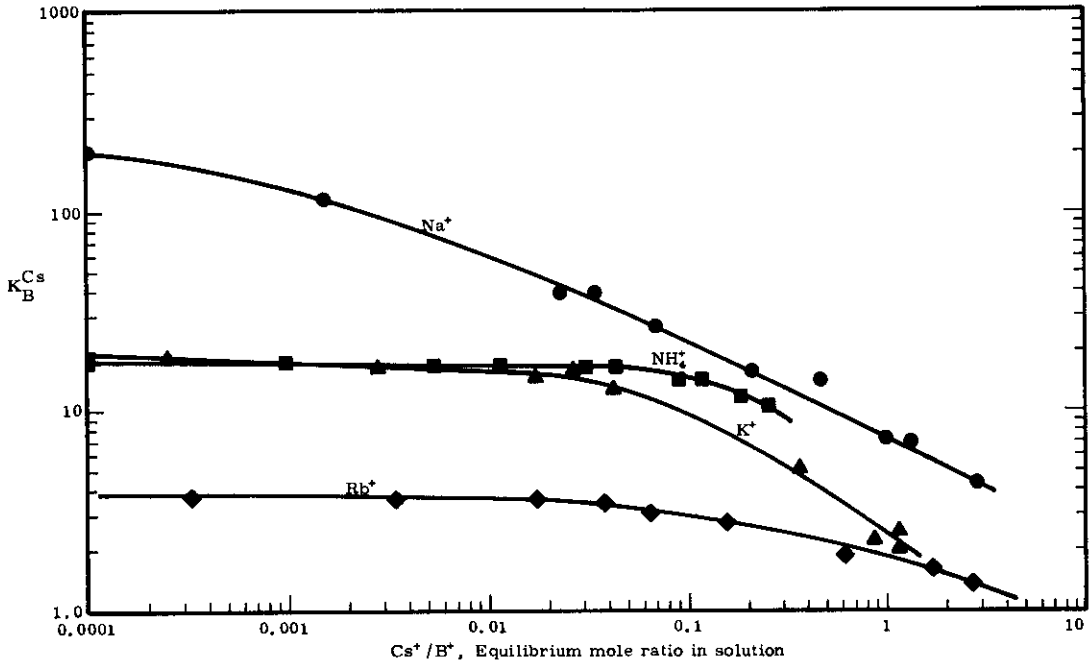

FIGURE IV-76

Mass Action Quotients for the Exchange of Cesium With Sodium, Potassium, Rubidium, and Ammonium Form Linde AW-500 (Source of Data: HW-74609 and HW-78461)

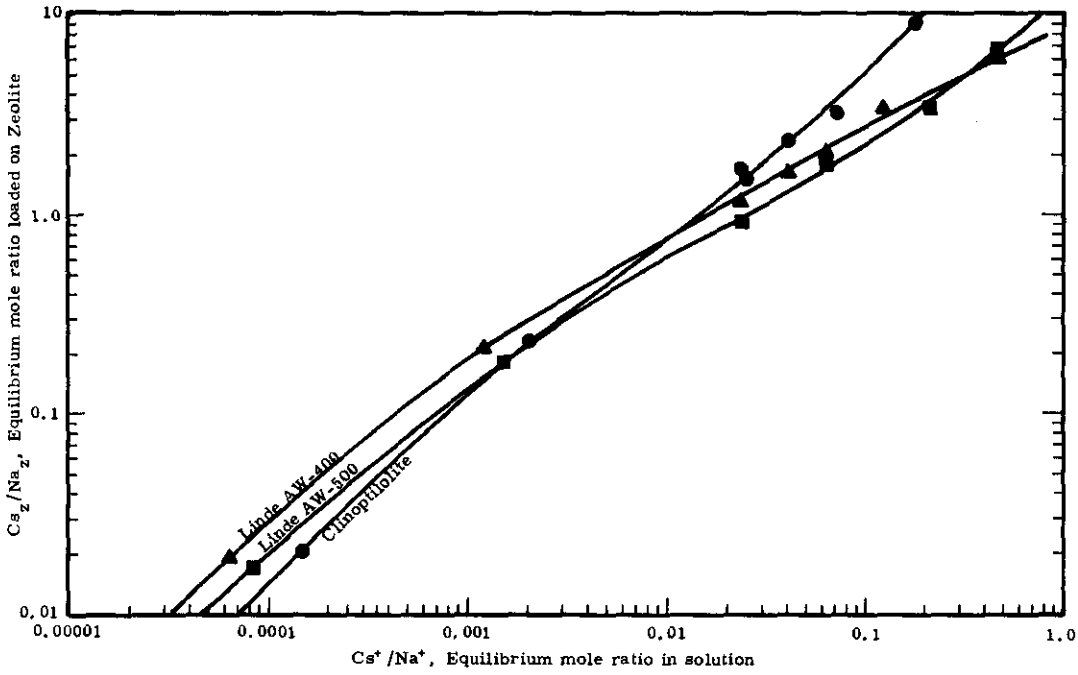

FIGURE IV-77

Equilibrium Ca/Na Ratios in Zeolite and Solution Phases at 25C
(Source of Data: HW-74609 and HW-78461)

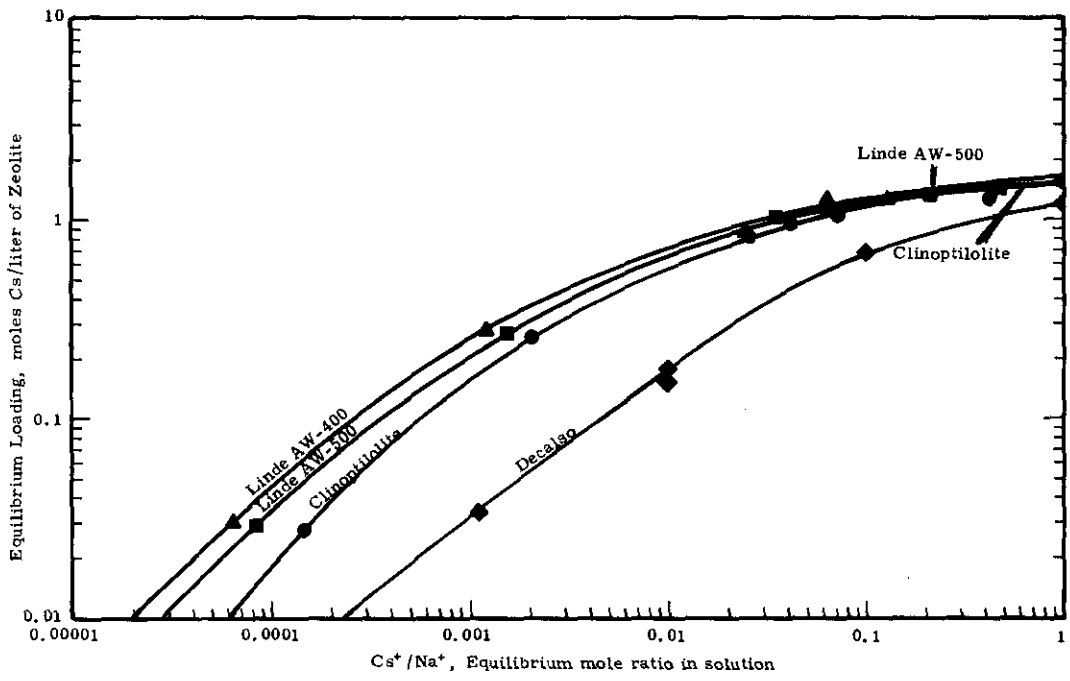

FIGURE IV-78

Equilibrium Cesium Loading on Zeolites
From Cesium-Sodium Solutions at 25C
(Source of Data: HW-74609, HW-78461, and HW-70874)

4.2.3 Column Loading Studies

The effects of several operating variables on the shape of the breakthrough curve have been correlated in terms of the slope "A" of the breakthrough curves plotted on log-probability paper, as discussed in Section F 3.1. The data were obtained in laboratory and pilot plant column runs using the feed compositions shown in Table IV-54.

TABLE IV-54

SYNTHETIC ALKALINE SUPERNATE WASTE COMPOSITIONS USED IN COLUMN LOADING STUDIES

	Molarity		
	PSN		
Constituent	Nelson & Mercer HW-76449[16]	Popovich HW-83461[20]	RSN: Knoll HW-84105[10]
Na^+	4.5	4.37	4.89
K^+	0	0.00060	0.00028
Rb^+	0	0.00019	0.000027
Cs^+	0.005	0.00076	0.000108
AlO_2^-	0	0	0.85
NO_3^-	1.3	0.58	2.65
NO_2^-	2.1	2.00	0.35
Cl^-	0	0.051	0.08
OH^-	0	0	0.9
$CO_3^=$	0.5	0.77	0
$SO_4^=$	0.045	0.09	0.03
$PO_4^{\equiv}$	0.014	0.051	0
Na^+/Cs^+	9000	5750	45,000

The following summary illustrates the effects of some of the more important variables on the slope of the breakthrough curve, A.

Particle Diameter. The log-probability slope varied inversely with the particle diameter (i.e., $A \sim \frac{1}{D_P}$)[16]. Since the effective particle diameter is inversely proportional to the sieve mesh size, A is directly proportional to the average mesh size. This effect is illustrated in Figure IV-79 for Linde AW-400 zeolite. For the data shown here, $A \cong (0.12)$(average mesh size). An average 20 to 50 mesh particle size has been chosen for the B-Plant columns as a compromise dictated by exchange kinetics and flowrate (pressure drop) considerations.

Type of Zeolite. The slope varies slightly with different zeolites, increasing with increased cesium selectivity. This effect is illustrated in Figure IV-80[16]. Although Linde AW-400 is slightly better than Linde AW-500, the latter may be used in B-Plant because of the limited availability of Linde AW-400.

Purex vs. Redox Supernate. Breakthrough curves for Purex[16] and Redox [10] wastes are shown in Figure IV-81. The zeolite breakthrough curves were steeper for Purex supernatant, apparently because of the lower salt strength and viscosity of the Purex waste relative to the Redox waste. The Duolite C-3 breakthrough curve, however, was steeper with the Redox waste than with Purex waste. This may be due to the higher pH and corresponding greater cesium selectivity of the Redox waste.

Temperature. The slope of the breakthrough curve was nearly unaffected by temperature for Linde AW-400 zeolite (see Figure IV-82)[16]. Since elevated temperatures lower the breakthrough capacity, low operating temperatures are recommended for the Plant columns during loading.

Superficial Velocity. The superficial velocity, V (the flow rate divided by the cross-sectional area of the column), had a relatively minor effect on the breakthrough slope, as shown in Figure IV-83[20]. The slope was approximately proportional to $V^{0.125}$ up to 2 gal/min-ft^2. An apparent maximum slope was obtained at 2 gal/min-ft^2, the design velocity of the B-Plant column.

Flow Rate. The effect of flow rate, expressed in column volumes/hour, R, on cesium breakthrough for Linde AW-500 is shown in Figure IV-84[20]. The log-probability slopes obtained from this and comparable data are shown in Figure IV-85 as a function of flow rate. From this plot, A is shown to be proportional to $R^{-0.55}$, in good agreement with the relationship presented in Section F 3.1.

The superficial velocity and flow rate correlations may be combined for a given zeolite bed and feed system. For example, with 20-50 mesh Linde AW-500 and Purex supernatant feed at 25 C,

$$A = \frac{7.1\ V^{0.125}}{R^{0.55}} \qquad (23)$$

A similar expression can be derived from laboratory column data for Linde AW-400[16]:

$$A = \frac{7.6\ V^{0.125}}{R^{0.55}} \qquad (24)$$

In both equations, V is expressed gal/min-ft^2 and R in column volumes/hr.

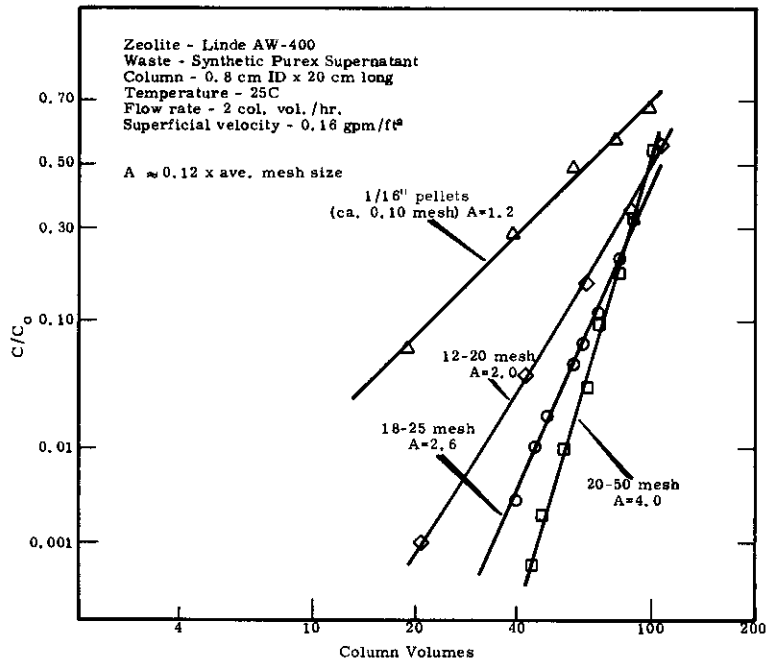

FIGURE IV-79

Effect of Particle Size on Cesium Breakthrough Curves
(Source of Data: HW-76449)

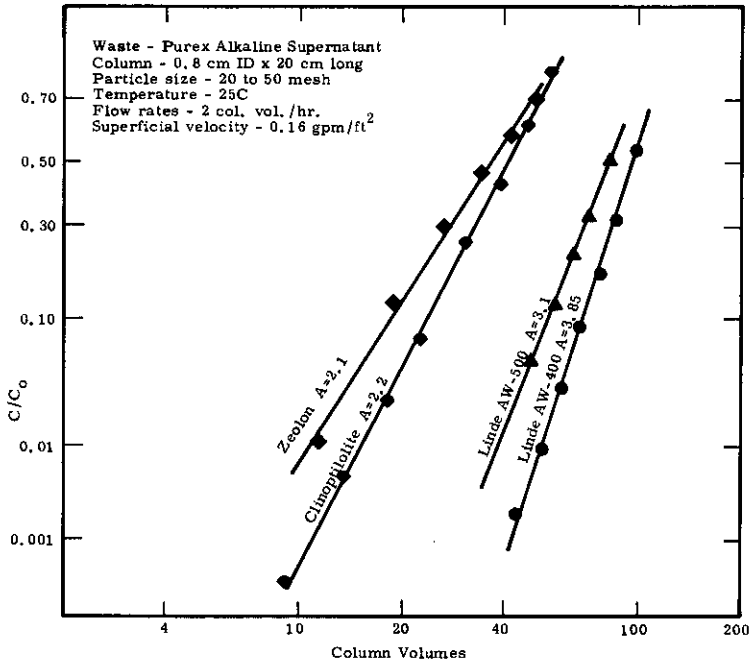

FIGURE IV-80

Cesium Breakthrough Curves for Several Zeolites
(Source of Data: HW-76449)

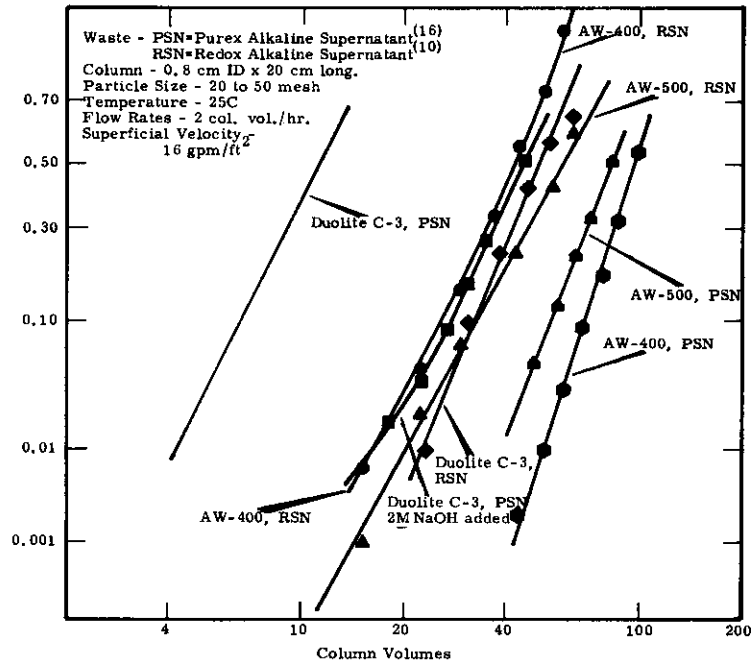

FIGURE IV-81

Comparison of Cesium Breakthrough from Purex and Redox Supernatants (Source of Data: HW-76449 and HW-84105)

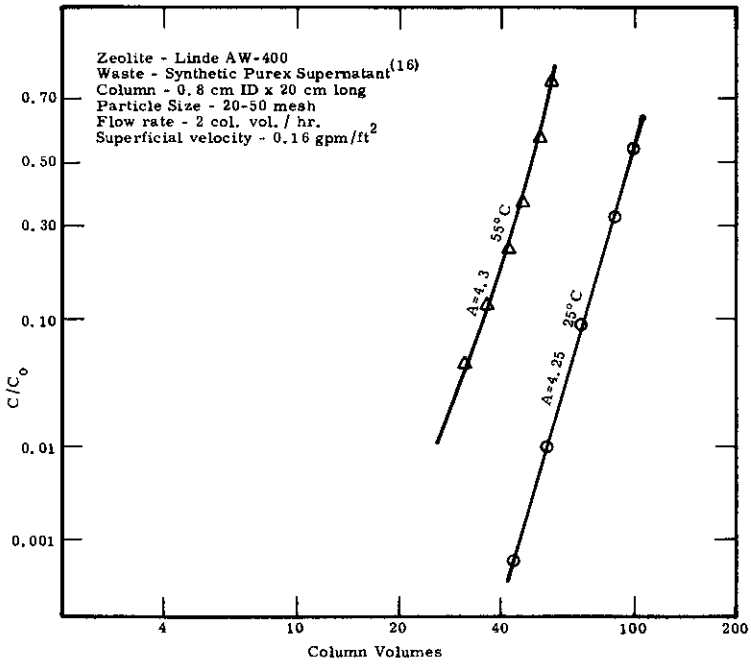

FIGURE IV-82

Effect of Loading Temperature on Cesium Breakthrough (Source of Data: HW-76449)

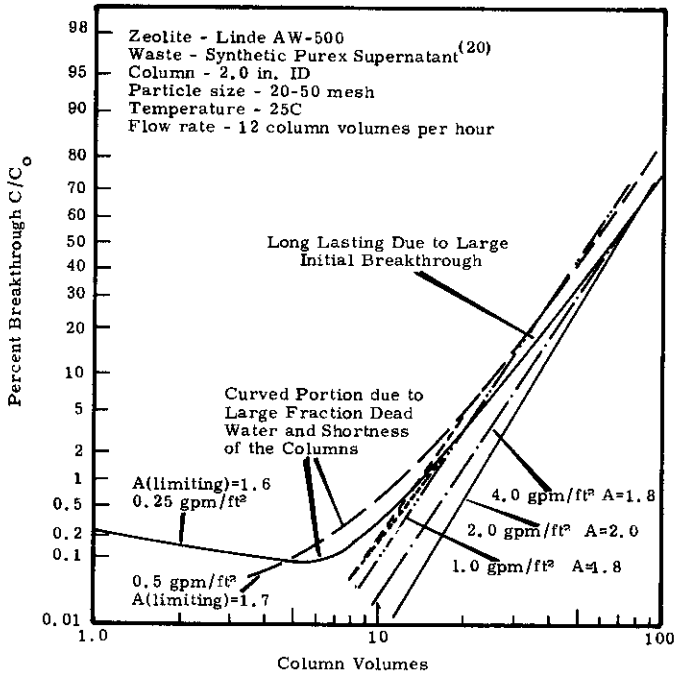

FIGURE IV-83

Effect of Superficial Flow Rate on Cesium Breakthrough
(Source of Data: HW-83461)

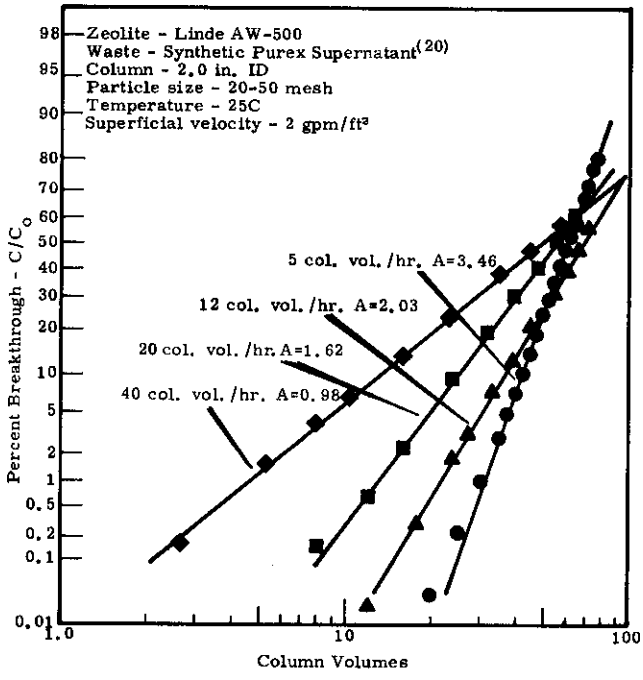

FIGURE IV-84

Effect of Column Volumes per Hour on Cesium Breakthrough
(Source of Data: HW-83461)

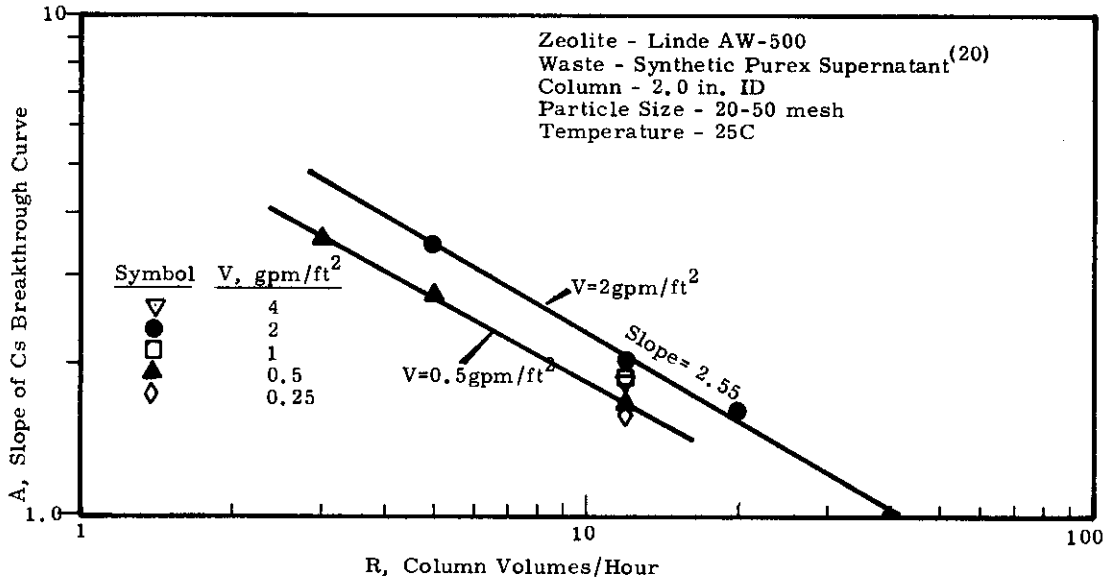

FIGURE IV-85

Effect of Column Volumes per Hour on the Constant A
(Source of Data: HW-83461)

Cesium Concentration. Varying the cesium concentration in the feed from 10^{-5} to 2×10^{-3}M had little effect on the breakthrough curve slopes (shown in Figure IV-96) when processing Purex acid waste solution through clinoptilolite(15). This appeared to be true also of Purex supernatant over the limited range of concentrations studied.

4.3 Wash and Scrub Studies

Following loading, the ion exchange beds are washed with several column volumes of water or dilute NaOH to remove the supernatant solution. This wash is essential for the Redox exchanger bed to prevent aluminum hydroxide precipitation in subsequent ammonia-ammonium carbonate elution steps; however, Purex supernatant does not contain aluminum, and the water wash prior to the ensuing sodium scrubbing step is optional.

Virtually all of the ion exchange sites are occupied by sodium ions after the loading step. The sodium can selectively be removed without displacing cesium by passing dilute solutions of ammonium salts or weak acids through the bed.

For alkaline supernatant waste flowsheets, nonacidic solutions are advantageous for sodium removal. Two of these have been tried; dilute solutions of ammonium carbonate and ammonium oxalate(16). Data on sodium removal from clinoptilolite by these chemicals and oxalic acid are shown in Figure IV-86, and data on sodium removal from AW-400 exchanger, including a higher concentration of ammonium carbonate, are shown in Figure IV-87.

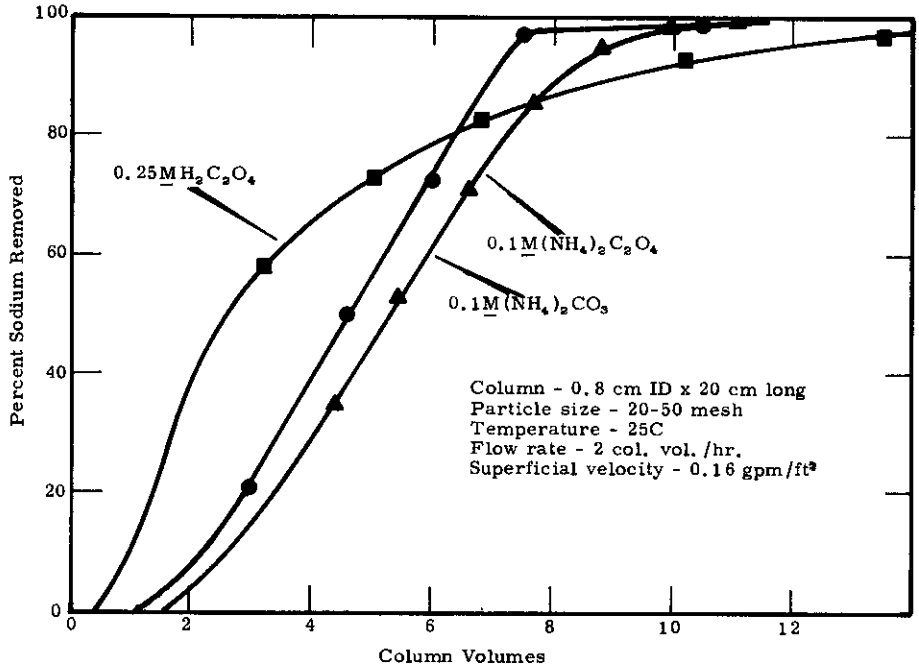

FIGURE IV-86

Removal of Sodium from Clinoptilolite with Various "Scrub" Solutions
(Source of Data: HW-76449)

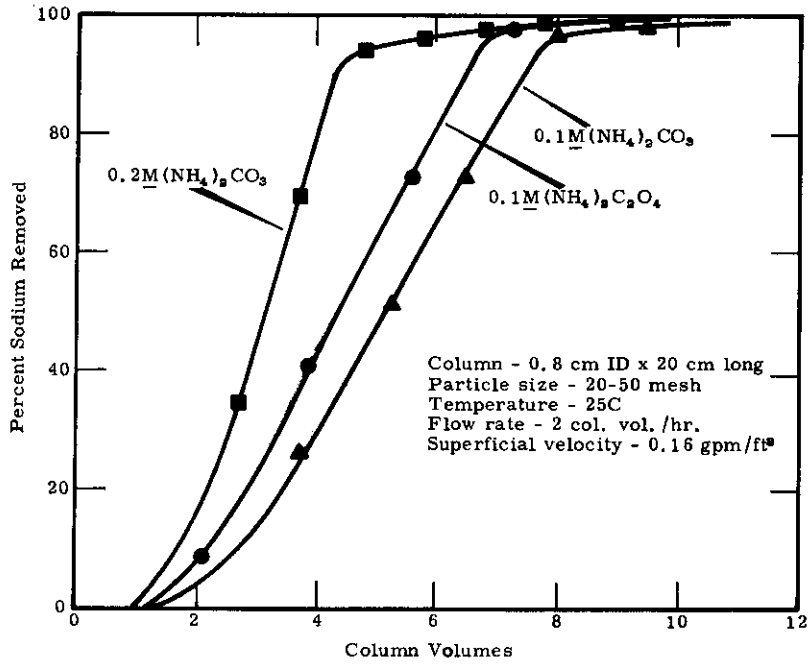

FIGURE IV-87

Removal of Sodium from Linde AW-400
with Various "Scrub" Solutions
(Source of Data: HW-76449)

Over 95 percent of the sodium was readily removed by the dilute ammonium solutions, but the final 2 to 5 percent eluted much more slowly. Thus, little practical benefit is gained by eluting with more than 5 column volumes of 0.2M $(NH_4)_2CO_3$ or 8 column volumes of 0.1M $(NH_4)_2CO_3$ unless very high purity cesium is desired. Sodium removal from Duolite C-3 was similar; over 98 percent of the sodium was eluted with 6 column volumes of 0.2M $(NH_4)_2CO_3$.[13]

Dilute ammonium carbonate would be the least costly solution for a flow sheet employing aged alkaline waste. However, zirconium-niobium removal is improved by using ammonium oxalate. Oxalic acid solutions can be effectively used in acid waste flowsheets (see Section F 5) where a high degree of zirconium-niobium removal is necessary; however, a subsequent ammonium hydroxide wash is required in this case to prevent gassing when ammonium carbonate is added to the acid mineral.

Cesium losses during sodium removal are dependent on the degree of cesium loading as shown in Figure IV-88[16]. Losses are not greatly different using the dilute alkaline scrub solutions than with nitric or oxalic acids[15]. In a practical operation, loading would be stopped at less than one percent breakthrough so that cesium loss would be low in the scrubbing step.

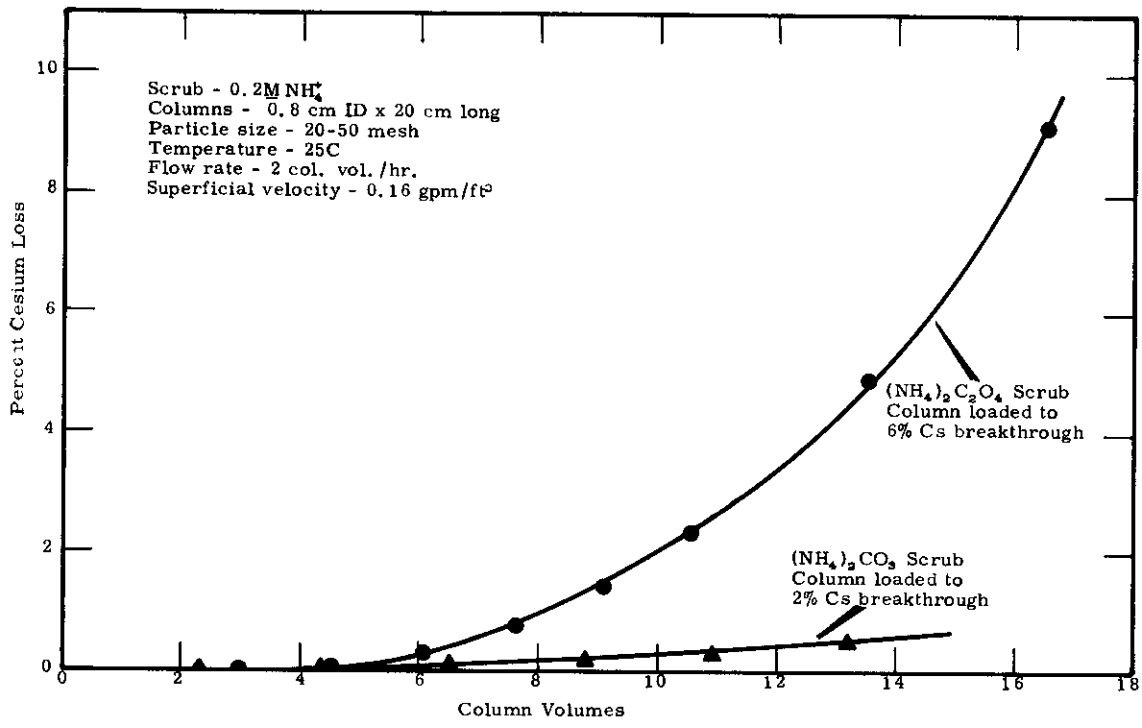

FIGURE IV-88

Cesium Loss from Clinoptilolite During Scrubbing for Two Cesium Breakthrough Levels (Source of Data: HW-76449)

4.4 Cesium Elution

Cesium can best be removed from zeolites by cations that are similar in size and charge to cesium. Potassium and rubidium ions are good eluting agents, but the subsequent separation from cesium is difficult. Ammonium ion is not as efficient an eluting agent as potassium and rubidium but is much easier to separate from cesium. Elution curves for several ammonium compounds are shown in Figure IV-89[15]. The differences can be explained on the basis of dissociation and thus availability of ammonium ions in solution. (The elution curves in this and subsequent figures were obtained with eluant upflow, i.e., counter to the loading flow, unless otherwise noted.)

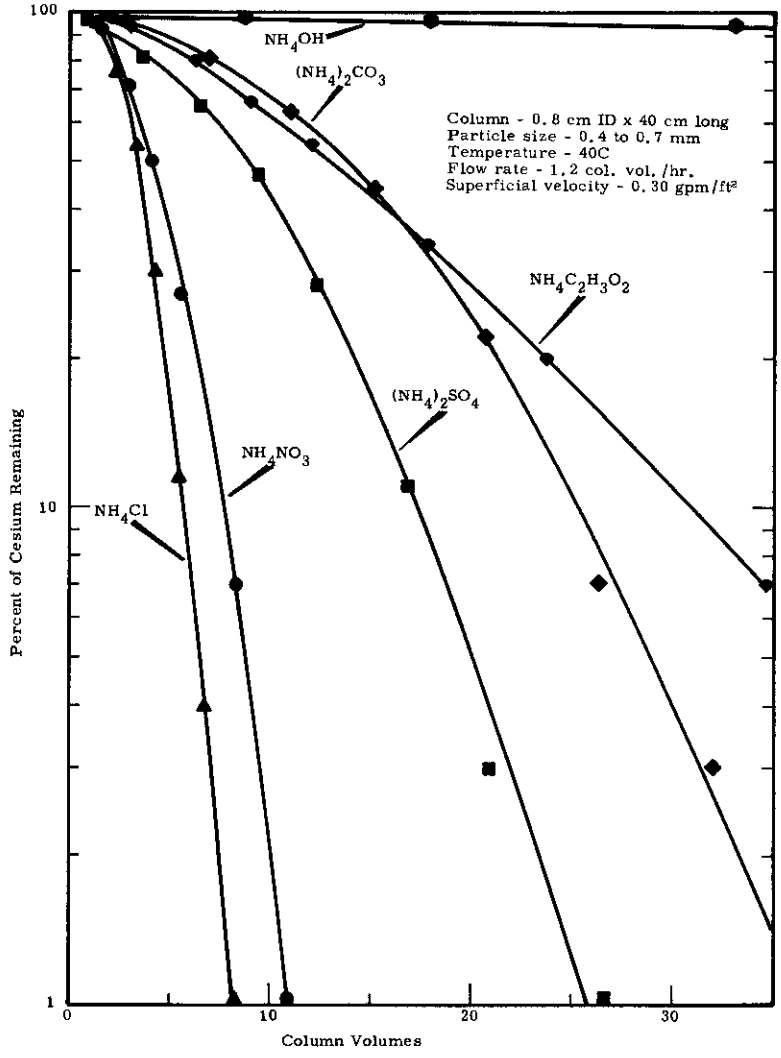

FIGURE IV-89

Elution of Cesium-137 from Clinoptilolite by Various 2N Ammonium Salts (Source of Data: Reference 15)

Ammonium acetate and ammonium carbonate have the advantage of being volatile. If a solution of ammonium acetate and cesium acetate is evaporated to dryness, all of the ammonium acetate is volatilized, leaving only solid cesium salts. The boiling point gradually increases from a little more than 100 to about 160 C. However, ammonium carbonate begins to volatilize rapidly at about 70 C, and the volatilization is complete before 100 C. Thus, with ammonium carbonate, it is possible to stop the evaporation at a point where a relatively pure aqueous solution of cesium carbonate is obtained.

Experimental work with ammonium carbonate elutions indicated that elution efficiency could be greatly improved by increased temperatures for several reasons: relative bonding strength of cesium is lower at higher temperatures, ammonium carbonate dissociation increases with increased temperatures, ionic mobilities and diffusion rates are improved, and solution viscosity is lowered. With solutions of other ammonium compounds, elution has been accomplished at 80 C, but the temperature of ammonium carbonate solutions is limited by gassing. Gassing is also influenced by the ammonia content.

Ammonium carbonate solutions are actually equilibrium solutions of ammonium bicarbonate-ammonium carbonate-ammonium carbamate and are displaced toward the carbamate at high pH and high ammonia content. Table IV-55 shows he relationship of temperature and ammonia content with gas evolution during elution[15].

TABLE IV-55

EFFECT OF TEMPERATURE AND AMMONIA CONCENTRATIONS ON GASSING OF $(NH_4)_2CO_3$ SOLUTIONS

(Source of Data: Reference 15)

Column: 75 ml of 20 x 50 mesh clinoptilolite

Flow Rate: 75 ml/min

Solution Composition M CO_2	M NH_3	% NH_3 Added as NH_4OH	Temp., °C	Gas Evolution, Ml/Min
1.9	3.8	0	50	0.0094
			55	0.038
			60	2.8
1.9	4.3	12	50	Trace
			55	0.0023
			60	0.066
1.9	5.8	35	50	Trace
			55	Trace
			60	0.0023

4.4 Cesium Elution

Cesium can best be removed from zeolites by cations that are similar in size and charge to cesium. Potassium and rubidium ions are good eluting agents, but the subsequent separation from cesium is difficult. Ammonium ion is not as efficient an eluting agent as potassium and rubidium but is much easier to separate from cesium. Elution curves for several ammonium compounds are shown in Figure IV-89[15]. The differences can be explained on the basis of dissociation and thus availability of ammonium ions in solution. (The elution curves in this and subsequent figures were obtained with eluant upflow, i.e., counter to the loading flow, unless otherwise noted.)

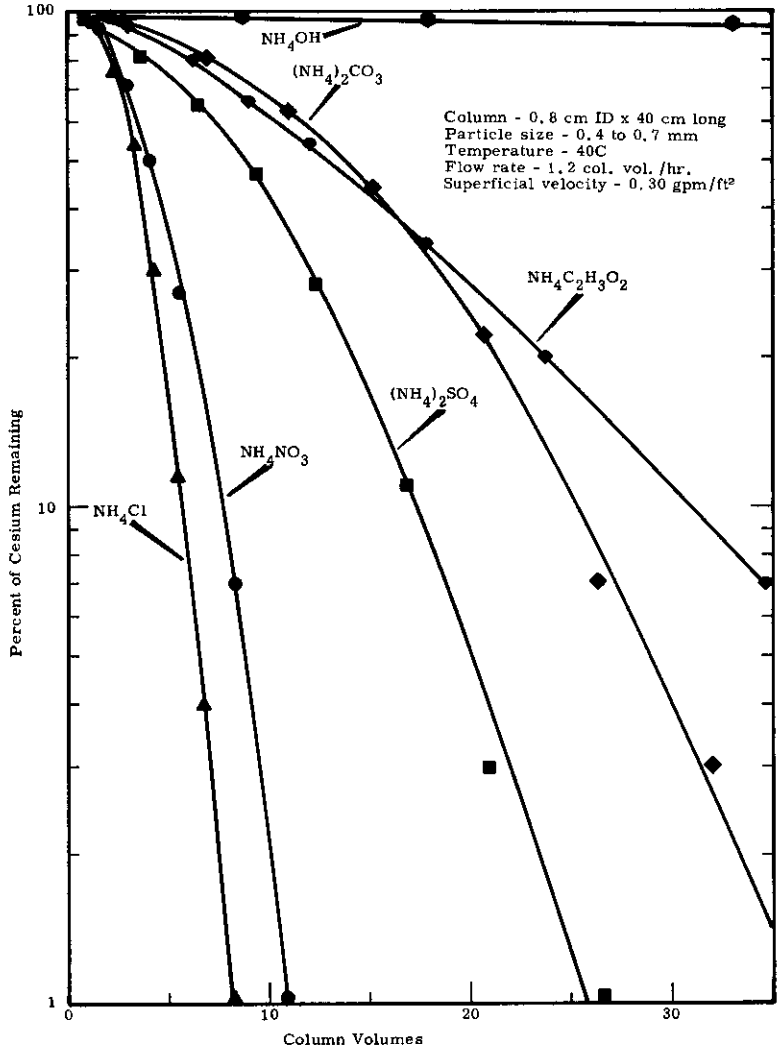

FIGURE IV-89

Elution of Cesium-137 from Clinoptilolite by Various 2N Ammonium Salts (Source of Data: Reference 15)

Ammonium acetate and ammonium carbonate have the advantage of being volatile. If a solution of ammonium acetate and cesium acetate is evaporated to dryness, all of the ammonium acetate is volatilized, leaving only solid cesium salts. The boiling point gradually increases from a little more than 100 to about 160 C. However, ammonium carbonate begins to volatilize rapidly at about 70 C, and the volatilization is complete before 100 C. Thus, with ammonium carbonate, it is possible to stop the evaporation at a point where a relatively pure aqueous solution of cesium carbonate is obtained.

Experimental work with ammonium carbonate elutions indicated that elution efficiency could be greatly improved by increased temperatures for several reasons: relative bonding strength of cesium is lower at higher temperatures, ammonium carbonate dissociation increases with increased temperatures, ionic mobilities and diffusion rates are improved, and solution viscosity is lowered. With solutions of other ammonium compounds, elution has been accomplished at 80 C, but the temperature of ammonium carbonate solutions is limited by gassing. Gassing is also influenced by the ammonia content.

Ammonium carbonate solutions are actually equilibrium solutions of ammonium bicarbonate-ammonium carbonate-ammonium carbamate and are displaced toward the carbamate at high pH and high ammonia content. Table IV-55 shows he relationship of temperature and ammonia content with gas evolution during elution[15].

TABLE IV-55

EFFECT OF TEMPERATURE AND AMMONIA CONCENTRATIONS ON GASSING OF $(NH_4)_2CO_3$ SOLUTIONS

(Source of Data: Reference 15)

Column: 75 ml of 20 x 50 mesh clinoptilolite

Flow Rate: 75 ml/min

Solution Composition M CO_2	M NH_3	% NH_3 Added as NH_4OH	Temp., °C	Gas Evolution, Ml/Min
1.9	3.8	0	50	0.0094
			55	0.038
			60	2.8
1.9	4.3	12	50	Trace
			55	0.0023
			60	0.066
1.9	5.8	35	50	Trace
			55	Trace
			60	0.0023

Elution efficiency per mole of total ammonia is slightly improved by moderate additions of ammonium hydroxide to the ammonium carbonate. From the available information, 55 C has been chosen as a practical elution temperature, with about 25 percent of the ammonium being added as the hydroxide[15].

Cesium elution curves for cesium removal from clinoptilolite by three concentrations of elution solution are shown in Figure IV-90. As would be expected, the dilute solutions elute cesium more effectively per mole of ammonium; however, the advantage of lower volumes outweighs the loss in efficiency, and thus the 8N solution is the choice eluting solution[16].

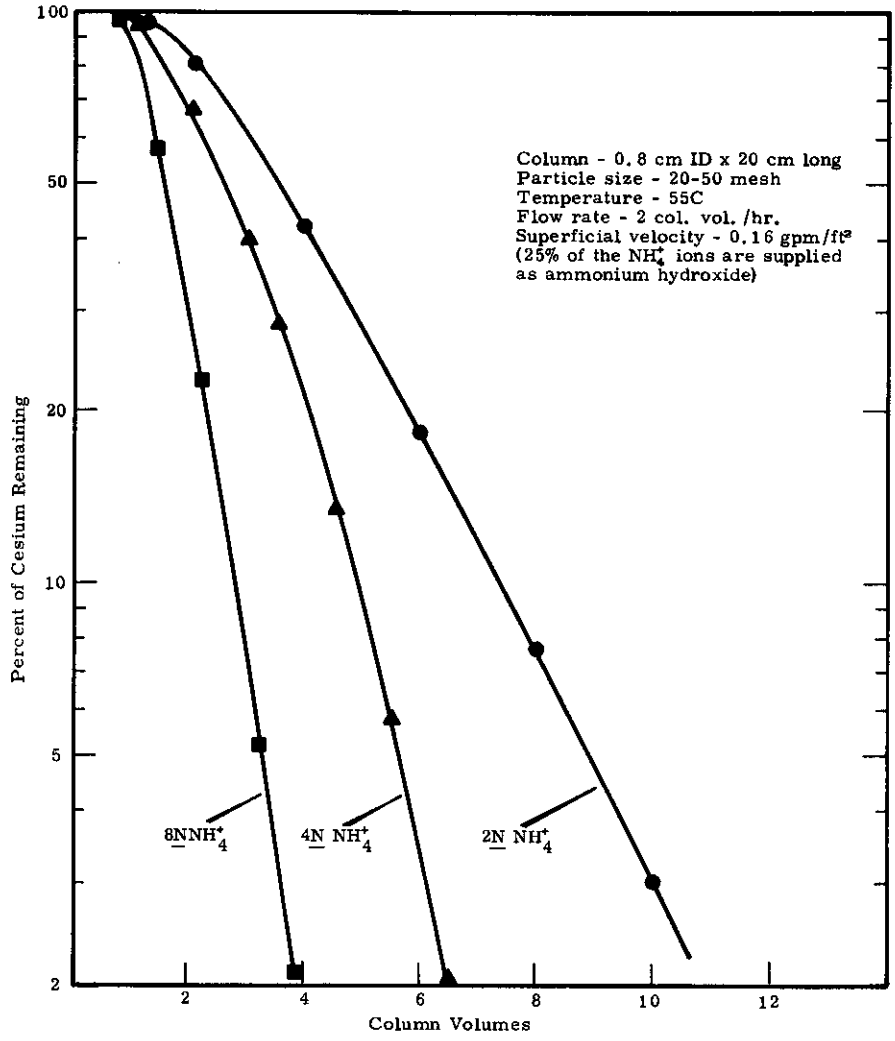

FIGURE IV-90

Elution of Cesium from Clinoptilolite by Three Concentrations of Ammonium Carbonate - Ammonium Hydroxide Solutions (Source of Data: HW-76449)

Comparison of cesium elution from several exchangers is shown in Figure IV-91[10,16]. There appears to be a significant difference in the elution performance depending on the solution used to load the exchangers. For example, cesium was eluted much more readily from a clinoptilolite column loaded from PSN than from a similar column loaded from RSN. On the other hand, cesium loaded on Duolite C-3 was more readily eluted from a RSN-loaded column that from a PSN-loaded column. A slight fraction of the cesium does not elute from Linde AW-400 and AW-500 and is probably retained by the binder. This amounted to 4 to 8 percent of the cesium loaded from PSN[16] and 3 to 17 percent of the cesium loaded from RSN[10]. This fraction does not appear to lower the capacity on subsequent loading cycles nor does it build up any further; therefore, for practical purposes it can be ignored. This fraction was not included in the calculations for the AW-400 and AW-500 curves.

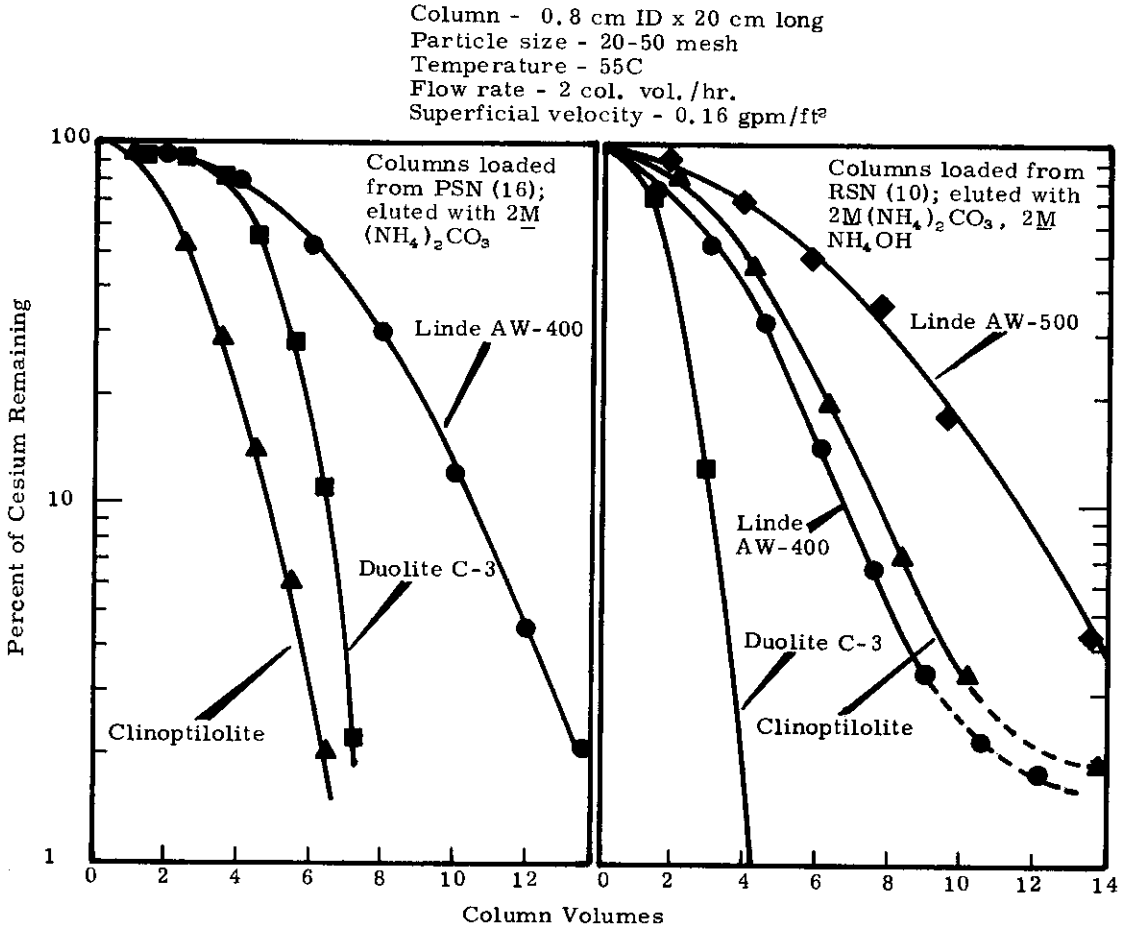

FIGURE IV-91

Elution of Cesium from Several Ion Exchangers with Ammonium Carbonate - Ammonium Hydroxide Solutions (Source of Data: HW-76449 and HW-84105)

The effect of particle size and flow rate on cesium elution from Duolite C-3 is shown in Figure IV-92. It can be seen that the elution is limited by kinetics and is considerably improved by decreased particle sizes and flow rates. The effect of flow rate on cesium elution from clinoptilolite was less pronounced, as shown in Figure IV-93. All of the elution studies were made in 0.8 cm columns, 20 cm long; and the effect of the superficial velocity on elution efficiency was not investigated independently.

4.5 Ion Exchanger Reconditioning

The ion exchange beds used for Purex supernatants require only a a simple water flush following elution to remove the ammonium carbonate eluant prior to the next loading cycle. For Redox wastes, however, the ammonium ion must be eluted from the bed with sodium hydroxide to keep aluminum in the RSN from precipitation with ammonium hydroxide generated during loading. The flowsheet for Redox supernatant (Figure IV-73) indicates the use of 3 column volumes of 1M NaOH. The standard laboratory procedure[10] also included recycling 4 column volumes of 8M NaOH to assure elimination of ammonia.

4.6 Ammonia-Ammonium Carbonate Recovery

Carbon dioxide evolution from ammonium carbonate eluant solutions begins when the solution is heated to about 55 C. Further heating will result in the rapid evolution of both CO_2 and ammonia at 70-80 C. The concentrations of NH_3 and CO_2 in the product solution eventually reach an equilibrium value, depending on the vapor pressure of the ammonium and carbonate salts in solution. In one pilot plant experiment[25], residual concentrations of 0.076M NH_3 and 0.40M $CO_2(CO_3^{=})$, were found after boiling a simulated ion exchange column eluant containing 0.41M Na^+ for 1 hour. The final pH was 9.8. In continuous operation, the solution composition in the evaporator will always be at an equilibrium value similar to this.

A semi-continuous process based on the volatility of ammonium carbonate will be used for recovering and reconstituting the cesium eluant. The flowsheet is included in Figures IV-72 and IV-73 and discussed below:

1. The concentrator must be brought to boiling with water or concentrated product from a preceding run. (Startup with ammonium carbonate solution can pressurize the system and overload the absorber.)

2. The concentrator will operate at the boiling point of the cesium product solution; and water, CO_2, and NH_3 will be continuously evolved at essentially the mole ratio in the eluant solution. The boil-up rate is set equal to the feed rate to maintain a constant level in the evaporator.

3. For most efficient ammonium carbonate recovery, the off-gases from the concentrator are passed through a down-draft condenser. Up to 95 percent of the NH_3 and CO_2 were absorbed in this step in a pilot plant unit[25]. The heat transfer surface must be continuously wetted with unsaturated solution to prevent deposition of crystallized $(NH_4)_2CO_3$; however, surfaces warmer than 60 C will not allow deposits to form. The heat generated by absorption of NH_3 and CO_2 must be removed by the condenser. The combined heat of formation and solution for $(NH_4)_2CO_3$ is 118.4 kcal/g-mol, and the heat of solution for NH_3 is 8.8 kcal/g-mol.

4. The volume of vapor leaving the condenser is essentially that of the non-condensible off-gases (purge air, etc.); consequently, the absorber unit can be quite small. Even when a pre-condenser is not provided, low gas flows through the absorber are observed because condensation and absorption of most of the condensible gases occurs in the bottom few inches of the absorber tower.

5. Make-up NH_3 and CO_2 are added to the bottom of the tower and make-up water is added to the top.

6. Absorption is accomplished by recycling a portion of the recovered eluant to the top of the absorber tower. Mass transfer coefficients in the pilot plant absorber packed with 1/2 in. Intalox saddles were unaffected by flow rate over the range of 50 to 300 gph/ft^2.

7. Ammonia and CO_2 losses are dependent on the partial pressure of the $(NH_4)_2CO_3$ recycle solution in the absorber off-gas. Typical partial pressures in the off-gases from the pilot plant absorber ranged from 14 to 94 mm Hg for NH_3 and 12 to 35 mm Hg for CO_2 with 70 to 90 F recycle solutions containing about 8 to 10M NH_3 and 4M CO_2.

8. About 90 percent of the residual NH_3 and CO_2 can be recovered by passing the off-gas through a small scrubber, using eluant makeup water as the scrub stream. A suggested flow diagram using this modification is shown in Reference (25).

4.7 Cesium Product Purification and Packaging

The purity of the cesium product after one cycle of ion exchange is determined primarily by the sodium remaining on the bed after the sodium scrubbing step, as discussed in Section F 4.3. Typical Na/Cs mole ratios should be about 5 to 10 with Purex supernatants and 10 to 50 with Redox supernatants.

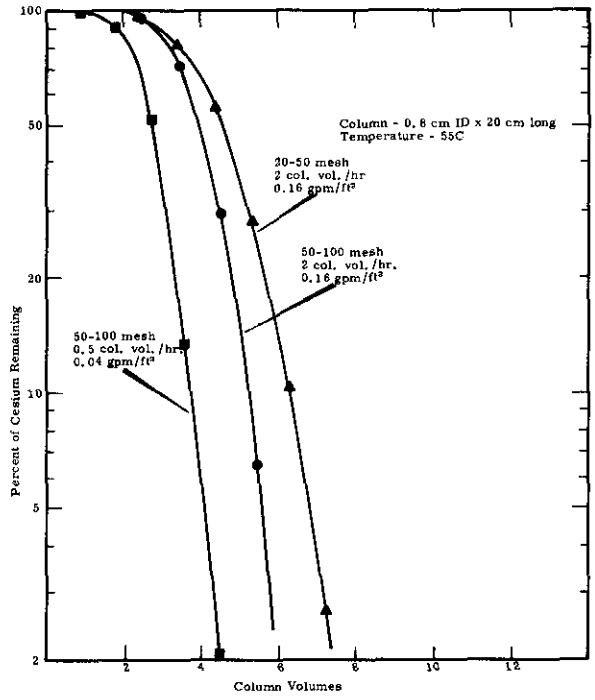

FIGURE IV-92

Elution of Cesium from Duolite C-3 with 2M Ammonium Carbonate
(Source of Data: HW-76449)

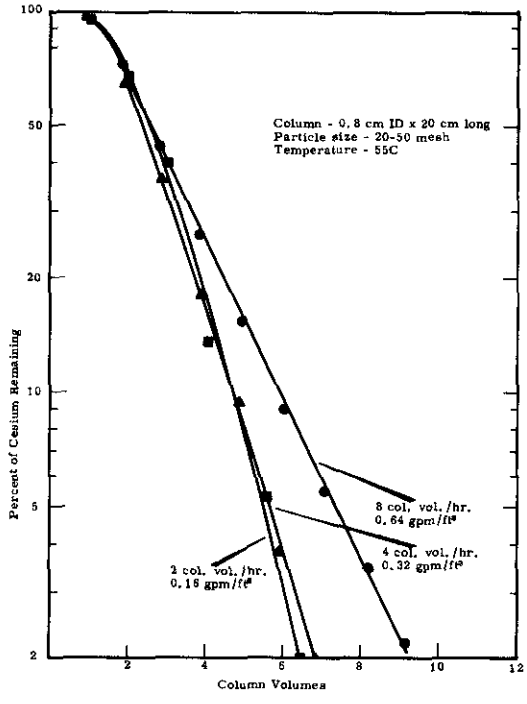

FIGURE IV-93

Effect of Flow Rate on Elution of Cesium from Clinoptilolite
with 4N Ammonium Carbonate Solution
(Source of Data: HW-76449)

Most of the remaining sodium can be removed by a second cycle of ion exchange using the same zeolite (Linde AW-500). Steep breakthrough curves are obtained, as shown in Figure IV-94 along with equilibrium loadings in excess of 0.8 mole of Cs/liter of zeolite[14]. Scrubbing with dilute ammonium carbonate should remove over 95 percent of the sodium as before, and ultimate product Na/Cs mole ratios as low as 0.05 should be obtained on elution with concentrated ammonium carbonate. Contamination from other alkali metals (Rb and K) would be about the same as for sodium.

Cesium in excess of market demand for Cs-137 will be loaded on Linde AW-500 and stored[21]. The proposed flowsheet is shown in Figure IV-95. It differs from the above purification flowsheet in that the cesium in the effluent approaches 100 percent breakthrough and in having no scrub or elution steps.

Most of the cesium stored on zeolite can be recovered by eluting with ammonium or nitric acid solutions. In two experiments, 86 and 90 percent of the cesium were eluted from Linde AW-500 with 2M NH_3NO_3 and 1M HNO_3, respectively, after the loaded zeolite was held at 60° C for 24 hours[2]. The 1M nitric acid solution also leached aluminum from the zeolite lattice.

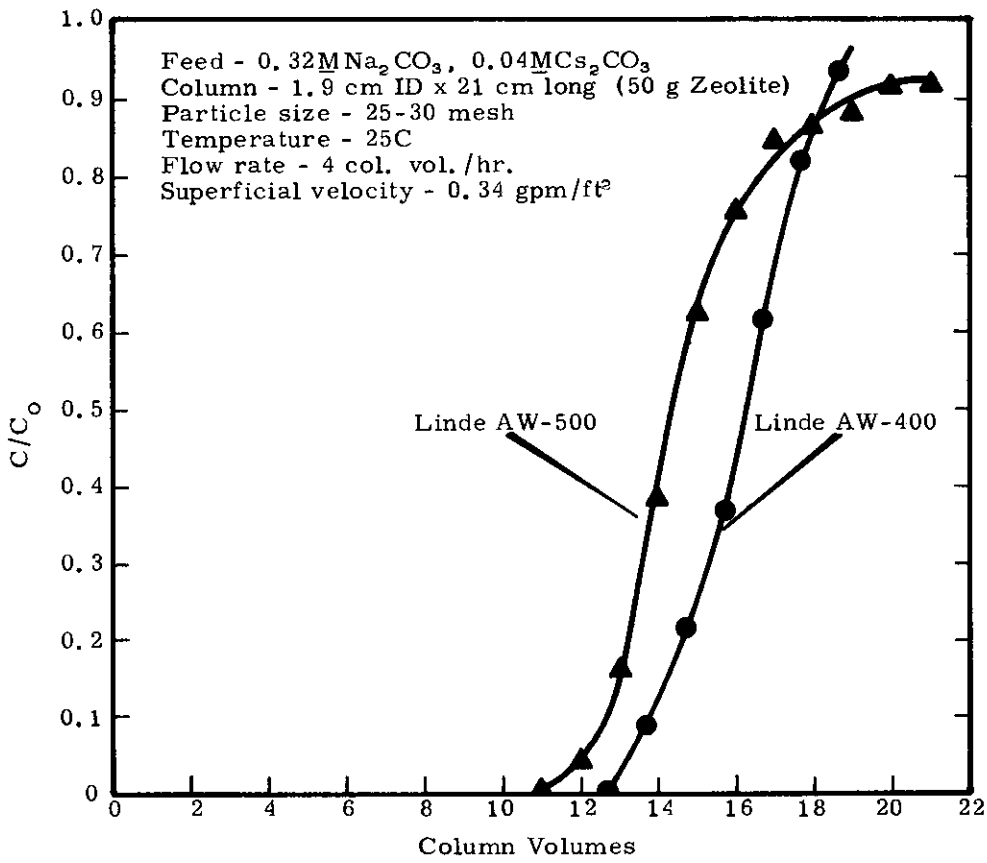

FIGURE IV-94

Cesium Breakthrough Curves for Cesium Product Concentrate
(Source of Data: HW-78461)

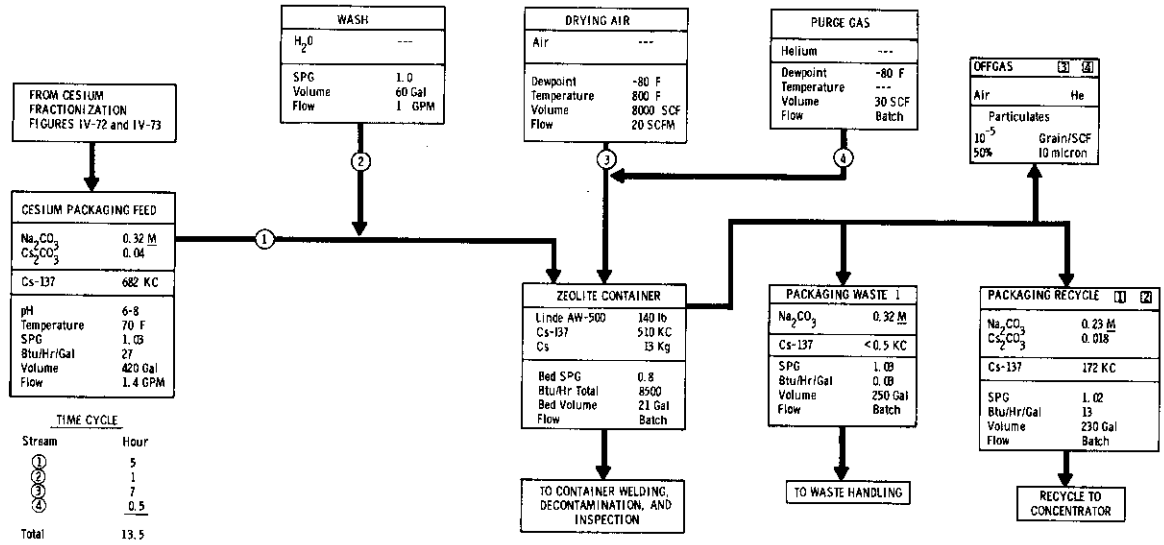

FIGURE IV-95

Flowsheet for Cesium Waste Packaging
(Source of Data: HW-78061)

5. Recovery of Cesium from Purex Acid Wastes

A flowsheet for removing cesium from Purex Acid Waste (PAW) with clinoptilolite ion exchange is presented in Figure IV-96[15]. The basic procedure is similar to that used for alkaline supernatant wastes, with the exception of the scrubbing and acid elution steps.

An oxalic acid scrub is required to elute sorbed zirconium and niobium, in addition to sodium. The hydrogen ion on the bed is then removed with ammonia to prevent gassing during the following ammonium carbonate elution step. Because ammonium hydroxide is only slightly ionized, it effectively replaces hydrogen ions without displacing the cesium.

Typical loading curves showing the effect of flow rate and cesium concentration on the cesium breakthrough are shosn in Figure IV-97 and IV-98[15]; equilibrium data for clinoptilolite was previously presented in Figure IV-76, IV-77, and IV-78. Generally, the effects of temperature, particle size, and flow rate were similar to those found with supernatant feeds.

The effectiveness of various scrub solutions in removing ZrNb-95, is shown in Figure IV-99[16]. Oxalic acid, the preferred scrub, removes the small amount of sorbed zirconium in the first one or two column volumes, while the niobium is removed at a slightly slower rate than sodium.

A small continuous decrease in cesium capacity, averaging 2 percent per cycle was found on re-using the clinoptilolite for several complete cycles of the preceding flowsheet[15]. This loss in capacity appears to be due to a very slow dissolution of the mineral in the acid influent. Other zeolites, such as Linde AW-400 and AW-500, are considerably less acid stable and cannot be used for PAW processing.

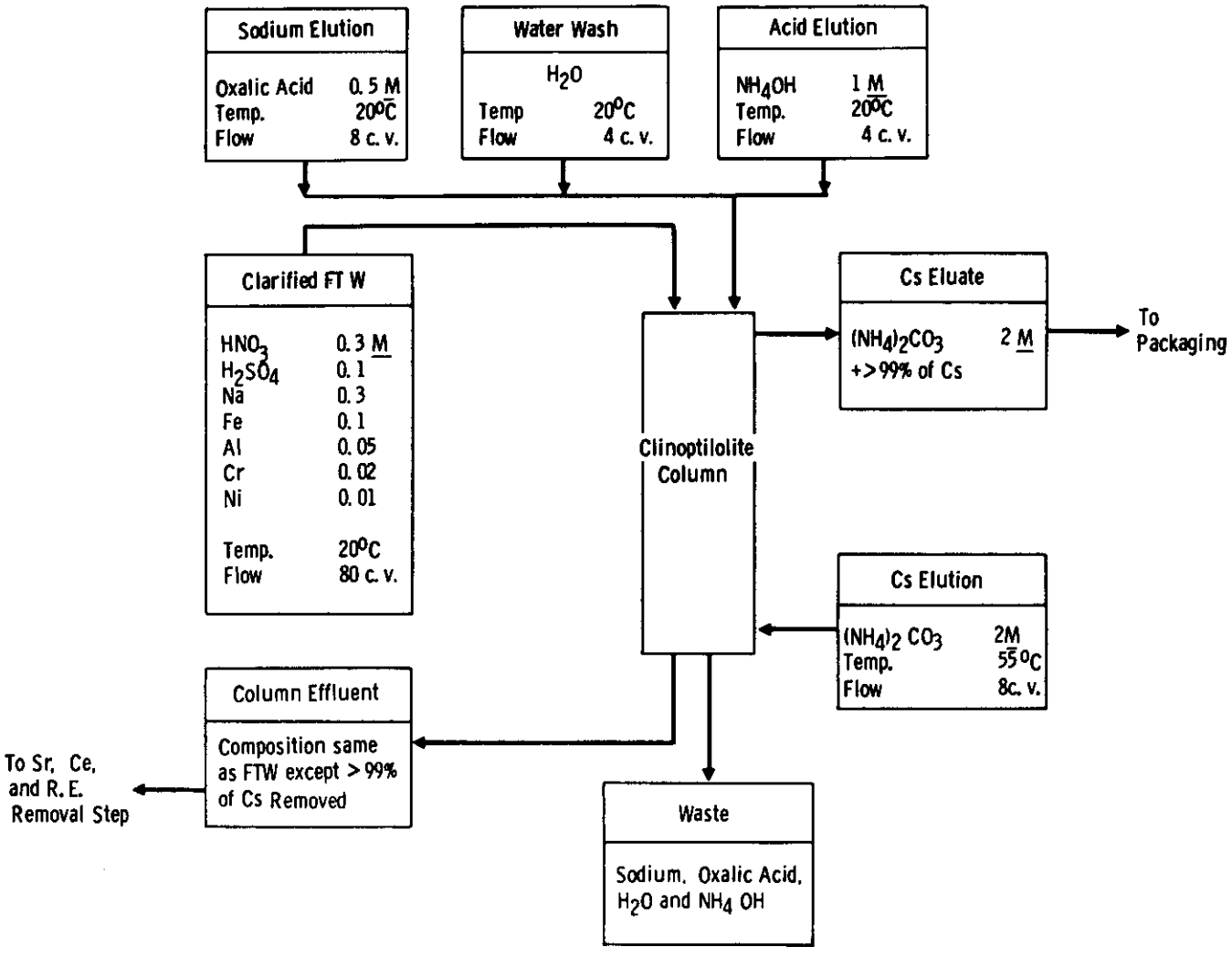

FIGURE IV-96

Extraction of Cesium from Purex Acid Waste
(Source of Data: Reference 15)

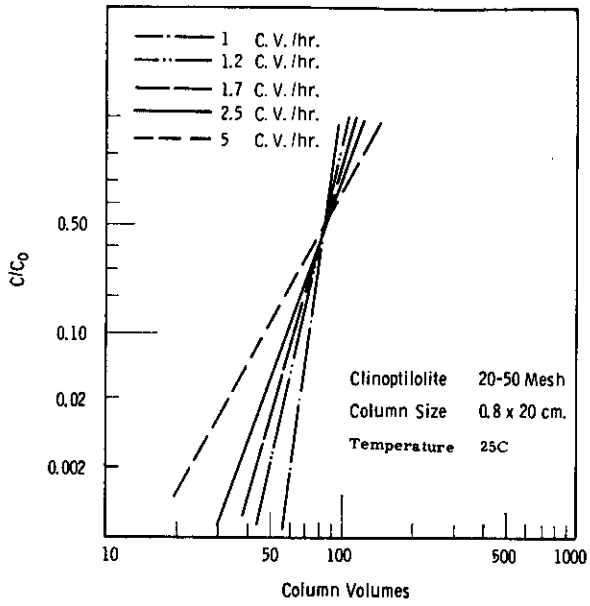

FIGURE IV-97

Effect of Flow Rate on Cesium Breakthrough with Purex Acid Waste (Source of Data: Reference 15)

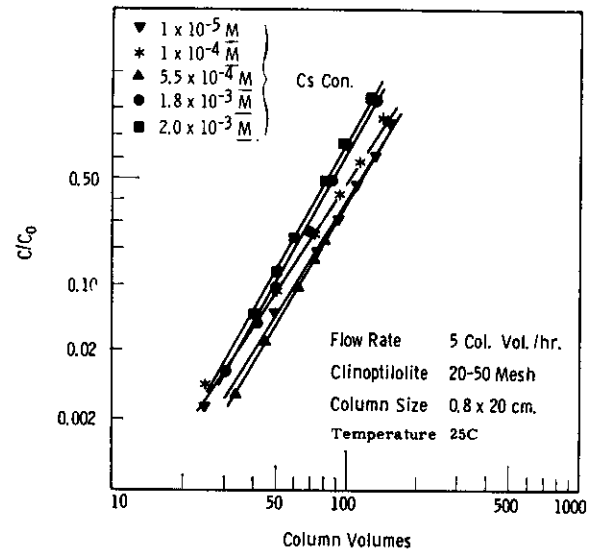

FIGURE IV-98

Effect of Cesium Concentration on Cesium Breakthrough With Purex Acid Waste (Source of Data: Reference 15)

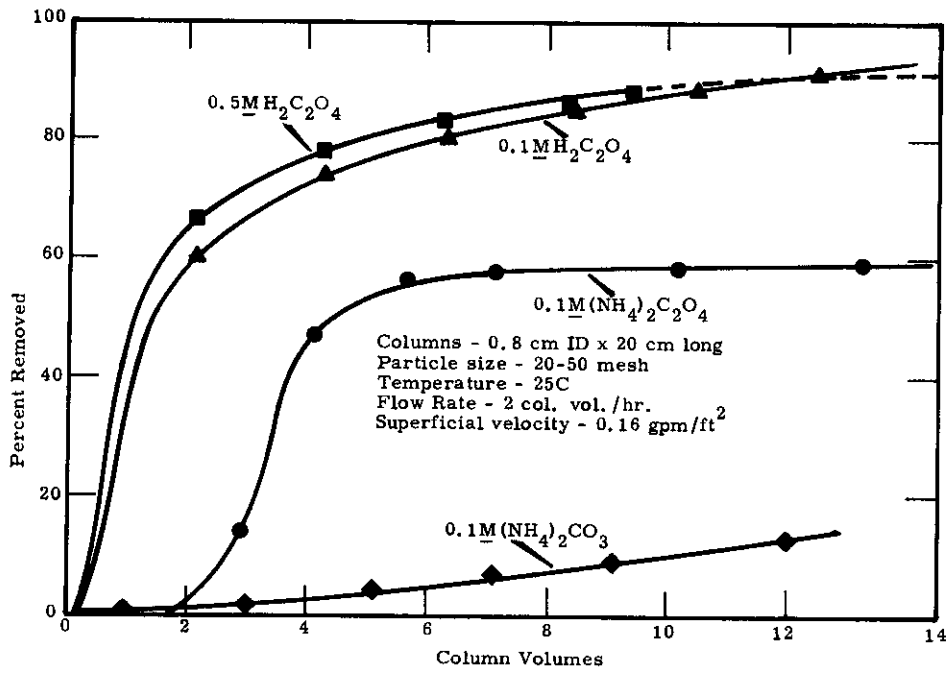

FIGURE IV-99

Removal of ZrNb-95 from Clinoptilolite by Four Solutions (Source of Data: HW-76449)

6. Strontium Packaging

6.1 Introduction

The recovered strontium product in excess of Sr-90 market demand will also be loaded on a suitable zeolite for storage. The major contaminant will be sodium ion, with lesser amounts of calcium and magnesium. Three of the zeolites in Table IV-51 are strontium selective under these conditions: Linde 4A, 4A XW, and 13 X. The 4A and 4A XW zeolites have the same crystalling structure, differing only in the amount of binder, and can be used interchangeably.

A flowsheet using Linde 4A zeolite is shown in Figure IV-100. The zeolite is loaded to ca. 100 percent capacity with the strontium collected for recycling after breakthrough is observed.

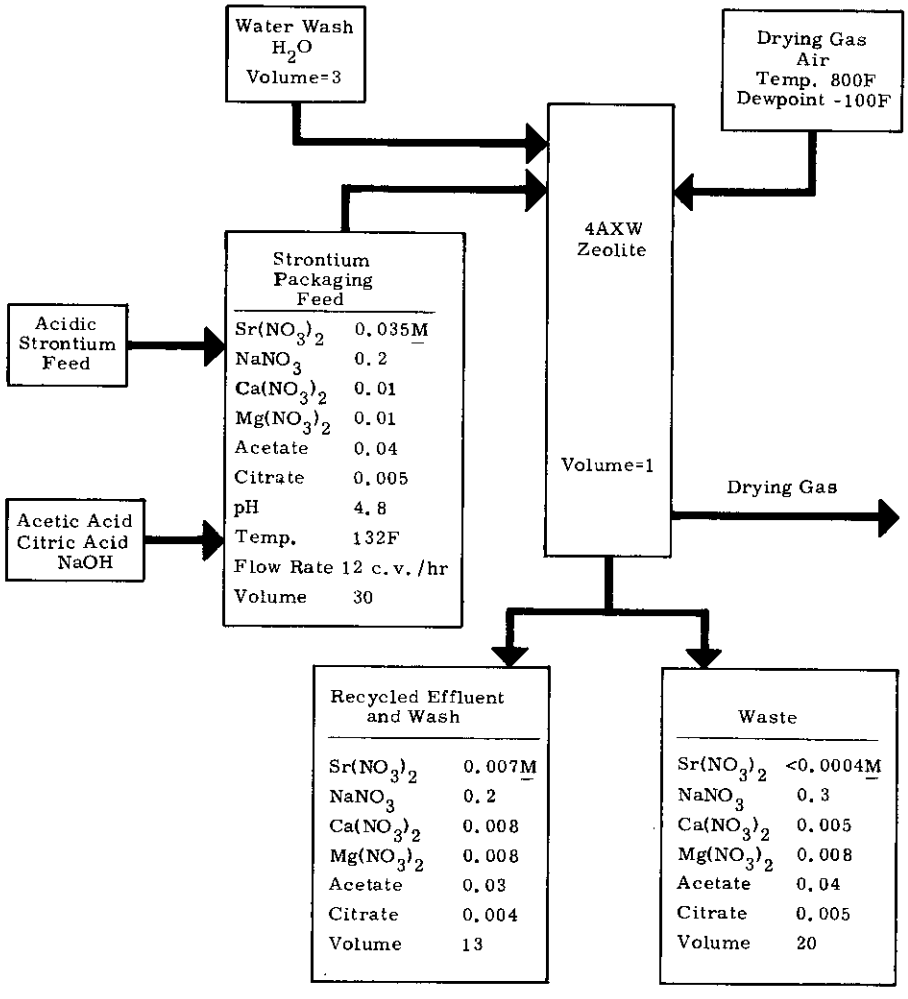

FIGURE IV-100

Strontium Waste Packaging Flowsheet
(Source of Data: Reference 13)

6.2 Equilibrium Data

Equilibrium data for Linde 4A XW and 13 X are presented in Figures IV-101, IV-102, and IV-103[14]. The mass action quotients presented in these figures were obtained at 25 C; however, the Sr-Cs and Sr-Na equilibrium are only slightly affected by temperature, and the data may be used to predict loadings (by the method described in Section F 1) at temperatures as high as 70 C. The mass action quotients are defined by the equations:

$$K_{Na}^{Sr} = \frac{(Sr_z)\ (Na^+)^2}{(Na_z)^2 (Sr^{++})} \tag{25}$$

$$K_{Ca}^{Sr} = \frac{(Sr_z)\ (Ca^{++})}{(Ca_z)\ (Sr^{++})} \tag{26}$$

$$K_{Ca}^{Na} = \frac{(Na_z)^2\ (Ca^{++})}{(Ca_z)\ (Na^+)^2} \tag{27}$$

where concentrations in the zeolite phase - Sr_z, Ca_z, Na_z - are expressed as equivalent fractions and concentrations in solution are normalities (equivalents/liter).

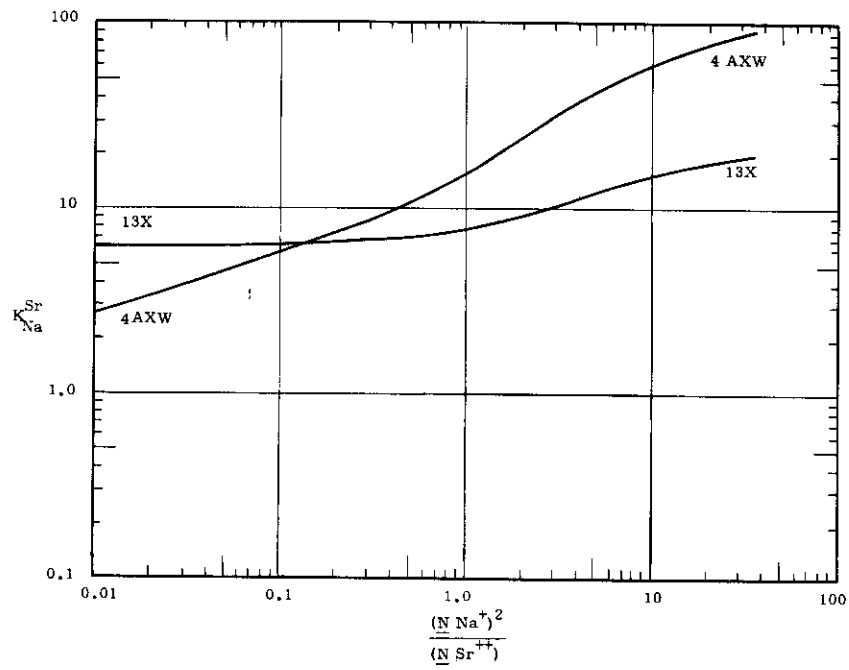

FIGURE IV-101

Variation of Mass Action Quotients with Solution Normality Ratios for the Exchange Reaction $2Na_{zeolite} + Sr_{solution} = Sr_{zeolite} + 2Na_{solution}$
(Source of Data: HW-78461)

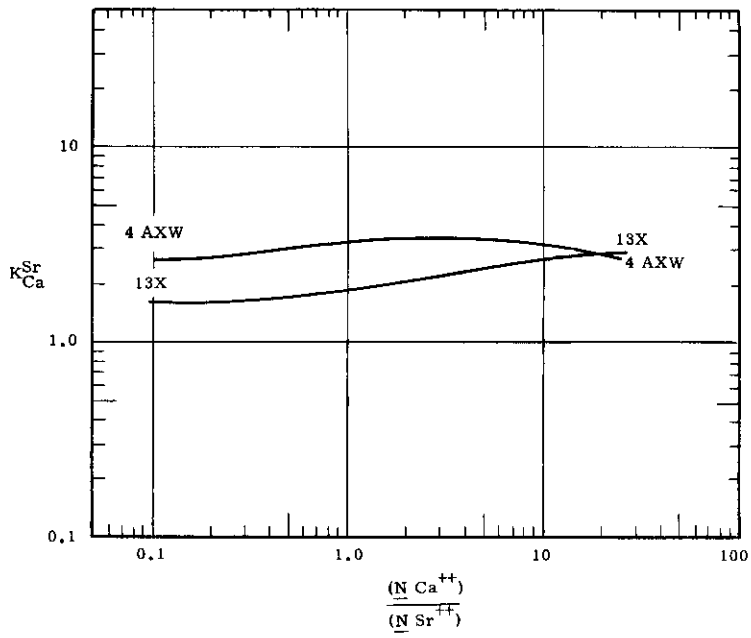

FIGURE IV-102

Variation of Mass Action Quotients with Solution Normality Ratios for the Exchange Reaction $Ca_{zeolite} + Sr_{solution} = Sr_{zeolite} + Ca_{solution}$
(Source of Data: HW-78461)

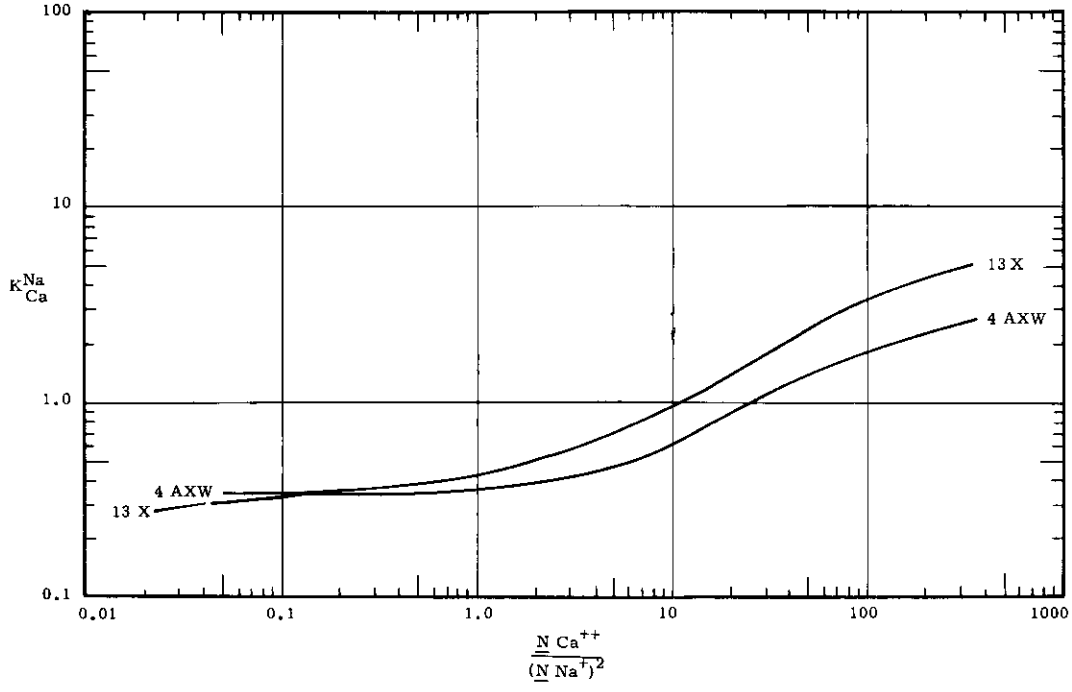

FIGURE IV-103

Variation of Mass Action Quotients with Solution Normality Ratios for the Exchange Reaction $Ca_{zeolite} + 2Na_{solution} = 2Na_{zeolite} + Ca_{solution}$
(Source of Data: HW-78461)

6.3 Loading Studies

The effects of operating variables on strontium breakthrough for loading a synehetic, concentrated 1BP (solvent extraction product) on Linde 4A zeolite are shown in Figures IV-104 through IV-106[14]. In general, increasing the temperature and decreasing the particle size will reduce the loading cycle time and the amount of recycle effluent. Decreasing the flow rate will reduce the amount of recycle effluent but will increase the loading time. Column length had no significant effect on the slope of the breakthrough curve with the column volumes/hour (or holdup time) held constant.

The addition of citrate ion to feed solutions containing Sr-90 and rare earths is recommended to complex Y-90 and Ce-144. If not complexed, these isotopes may absorb in a narrow band at the influent end of the column and cause heating problems at this point. A concentration of 0.005M citrate was sufficient to prevent significant absorption of yttrium and cerium[14].

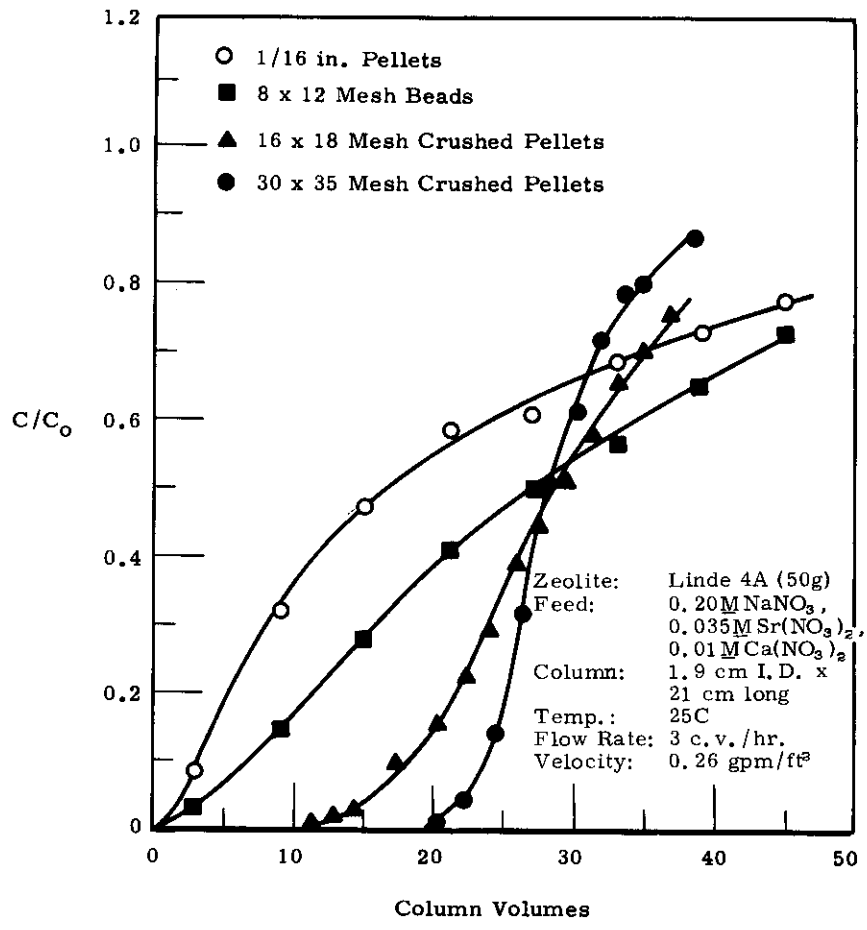

FIGURE IV-104

Effect of Particle Size on the Strontium Breakthrough Curves at 25C
(Source of Data: HW-78461)

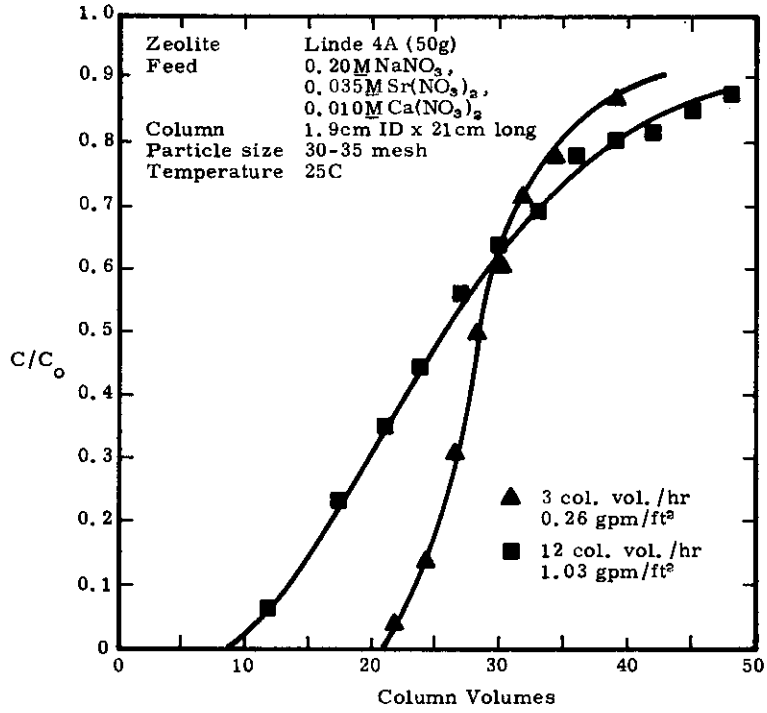

FIGURE IV-105

Effect of Flow Rate on Strontium Breakthrough Curve
(Source of Data: HW-78461)

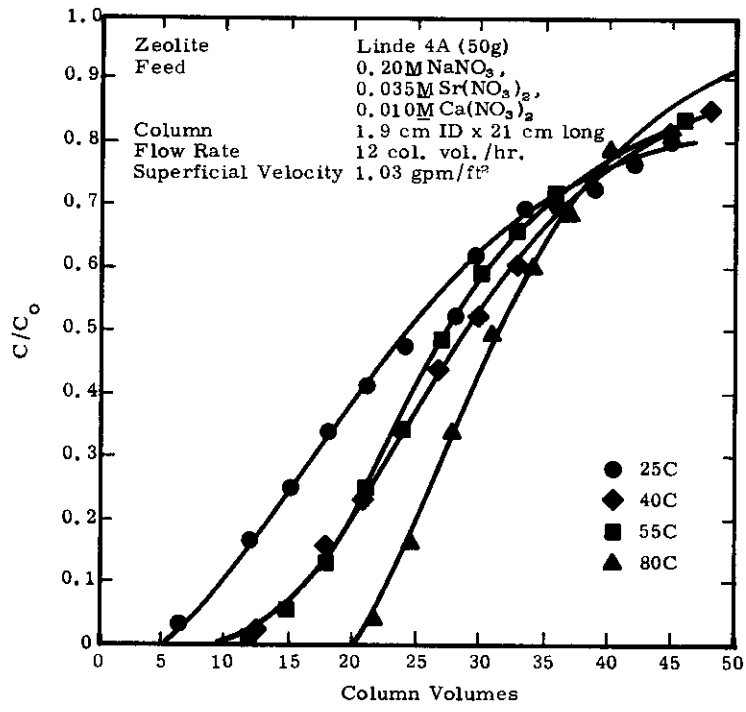

FIGURE IV-106

Effect of Temperature on Strontium Breakthrough Curves
(Source of Data: HW-78461)

6.4 Recovery of Strontium from Zeolites

Strontium can be recovered from the stored zeolite by nitric acid elution. In one test, 99 percent of the strontium was eluted from Linde 4A with 1M HNO_3 after the loaded zeolite had been heated at 600 C for 24 hours[2].

7. Recovery of Technetium from Stored Supernates

7.1 Introduction

Technetium-99 exists as the soluble pertechnetate ion in Purex and Redox alkaline supernate wastes. The pertechnetate ion readily loads on strong-base anion exchange resins from the waste supernatant solutions and can be conveniently recovered by passing the effluent from the cesium ion exchange columns through an anion resin bed. A flowsheet for this purpose is presented in Figure IV-107[3].

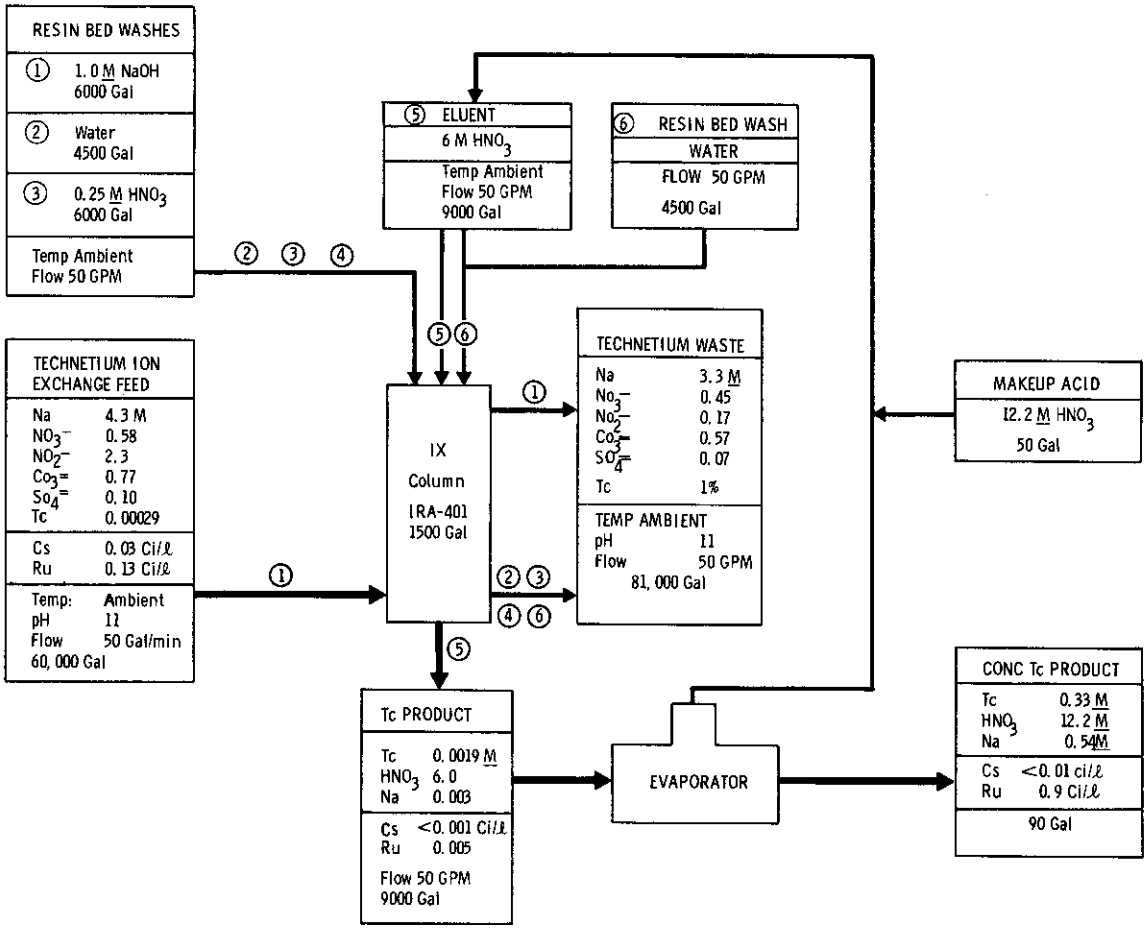

FIGURE IV-107

Technetium Recovery from Purex Alkaline Supernatant Waste
(Source of Data: HW-83348)

The process consists of passing about 40 column volumes of alkaline supernate through the column. After the column is loaded, the bed is washed first with dilute sodium hydroxide to remove contaminating fission product, nitrite, and carbonate ions. The resin is then converted to the nitrate form with dilute nitric acid. (The nitric acid-hydroxide reaction is exothermic and is more easily controlled with dilute acid.)[26] The technetium is eluted with 6M HNO_3, and the bed is prepared for re-loading by displacing the acid with water.

The technetium product is concentrated, and the distilled nitric acid is condensed and reused in the next elution. A small amount of technetium is volatilized during concentration but is recovered and returned to the process in the recycled acid.

7.2 Equilibrium Data

The equilibrium distribution of technetium between synthetic Purex waste supernate solutions and various organic anion resins is shown in Table IV-56 as a function of waste dilution[22]. The distribution ratio, K_d, is defined as

$$K_d = \frac{\text{Amount of Tc in Resin}}{\text{Amount of Tc in Solution}} \times \frac{\text{ml solution}}{\text{Grams dry resin}}$$

The strong-base resins had the highest distribution coefficients, and two of these, Dowex 1 and Amberlite IRA-401, were examined more extensively.

TABLE IV-56

TECHNETIUM DISTRIBUTION FROM SIMULATED PUREX WASTE SUPERNATES AT VARIOUS DILUTIONS

(Source of Data: HW-73121)

	Technetium K_d in Supernates[a] of Strength:				
Strong-Base Resins	100%	75%	67%	50%	25%
Amberlite IRA-400	414	318	--	271	440
Amberlite IRA-401	--	--	325	--	--
Dowex 1	340	299	290	271	448
Dowex 2	220	226	--	218	320
Dowex 21K	186	202	--	156	202
Duolite A-101	373	335	--	389	529
Duolite A-102	194	213	--	209	294
Permutit S-2	226	193	--	201	297
Permutit SK	118	92	88	85	116
Intermediate-Base Resin					
Duolite A-30B	23	25	--	22	27
Weak-Base Resins					
Amberlite IR-45	139	138	--	147	178
Dowex 3	50	61	--	78	112

(a) Synthetic Purex Waste Supernatant Composition:

	M
$NaNO_2$	4.2
$NaNO_3$	2.6
Na_2CO_3	1.0
Na_3PO_4	0.02
Na_2SO_4	0.07
Tc-99	$\sim 2 \times 10^{-4}$

Effect of Anion Composition. Neutralized Purex waste supernate is composed chiefly of sodium nitrate, nitrite, and carbonate salts. The effect of each of these separately and in combination is shown in Table IV-57, using Dowex 1 resin.

TABLE IV-57

EFFECT OF ANION COMPOSITION ON TECHNETIUM K_d AT pH 10

(Source of Data: HW-73121)

Concentration of Anions, Moles/l			
NO_3^-	NO_2^-	$CO_3^=$	K_d
0	0	1	1026
0	3	1	410
0	3	0	240
3	3	1	220
3	0	1	165
3	3	0	144
3	0	0	96

These data show that carbonate enhances the absorption and nitrate reduces it.

Effect of Hydrogen Ion Concentration. The effect of hydrogen ion concentration on the technetium distribution ratio is shown in Figure IV-108[22]. The total nitrate composition was held constant at 7.5M by varying the ratio of HNO_3 and $NaNO_3$. The data show a sharp increase in K_d as the hydrogen ion concentration falls below 0.5M.

The distribution ratios were unaffected by pH over the range pH 1 to pH 11. Average K_d values for IRA-401 resin were 305 ± 50 at 1M $NaNO_3$, 138 ± 12 at 4M $NaNO_3$, and 133 ± 12 at 7.5M $NaNO_3$[22].

The effect of nitric acid concentration on the technetium K_d in the absence of $NaNO_3$ is shown in Figure IV-109 [22]. The data show that technetium-loaded resin can be washed with dilute nitric acid without excessive loss and that technetium elution will be rapid at concentrations above 4M HNO_3.

7.3 Column Studies

Breakthrough curves obtained in pilot plant runs with actual Purex waste supernate (Tank 103A) are shown in Figure IV-110[22]. The feed composition corresponded approximately to a 50 percent dilution of the synthetic feed composition shown in Table IV-56 (with the exception of Run 3 which had 2M added NaOH). The technetium concentration was 0.0112 g/l.

The data show that the slower flow rate used in Runs 2 and 3 greatly sharpened the breakthrough curve and that the added caustic was not beneficial. Approximately 90 column volumes of supernate were passed through the column to reach 50 percent breakthrough, corresponding to an equilibrium resin loading of about 1 g Tc/l of resin and a volumetric distribution ratio of 90.

The loaded pilot plant columns were washed with about 6 column volumes of either water or 0.25M HNO_3, and the technetium was eluted with 8M HNO_3. The elution curves are presented in Figure IV-111[22]. Essentially all of the technetium was eluted by 4 column volumes of eluant. The products from Runs 2 and 3 were decontaminated by factors of about 20,000 from Cs-137; 200 from Ru-106; ca. 200 from Ce-144; and 300 to 500 from ZrNb-95.

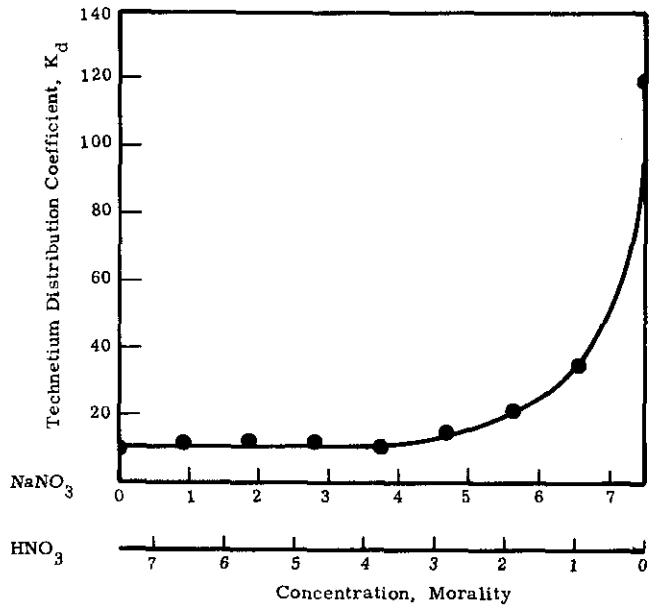

FIGURE IV-108

Technetium Distribution on IRA 401 Resin as a Function of Hydrogen Ion at Constant 7.5M Nitrate (Source of Data: HW-73121)

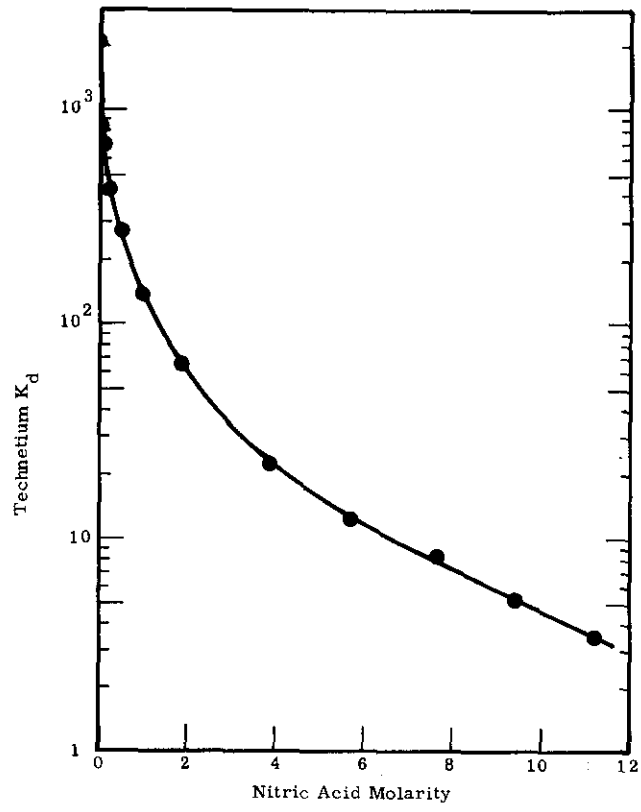

FIGURE IV-109

Technetium Distribution on Dowex 1x8 from Nitric Acid Solutions (Source of Data: HW-73121)

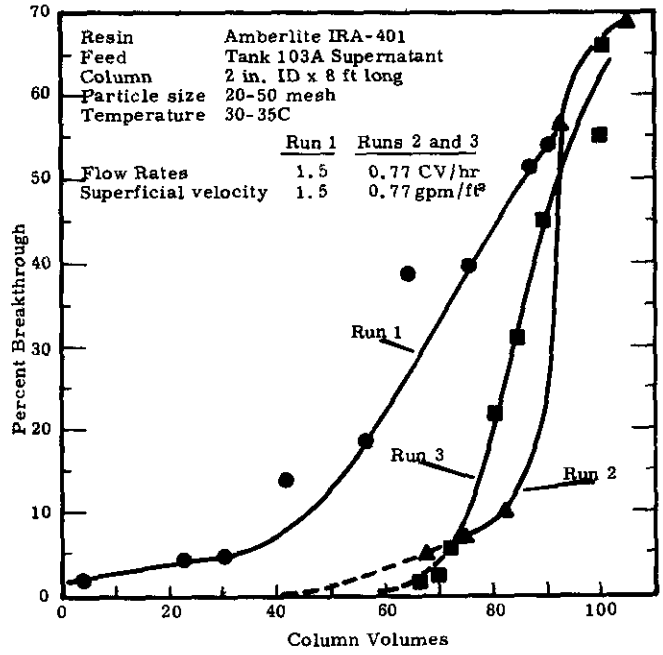

FIGURE IV-110

Technetium Breakthrough Curves
(Source of Data: HW-73121)

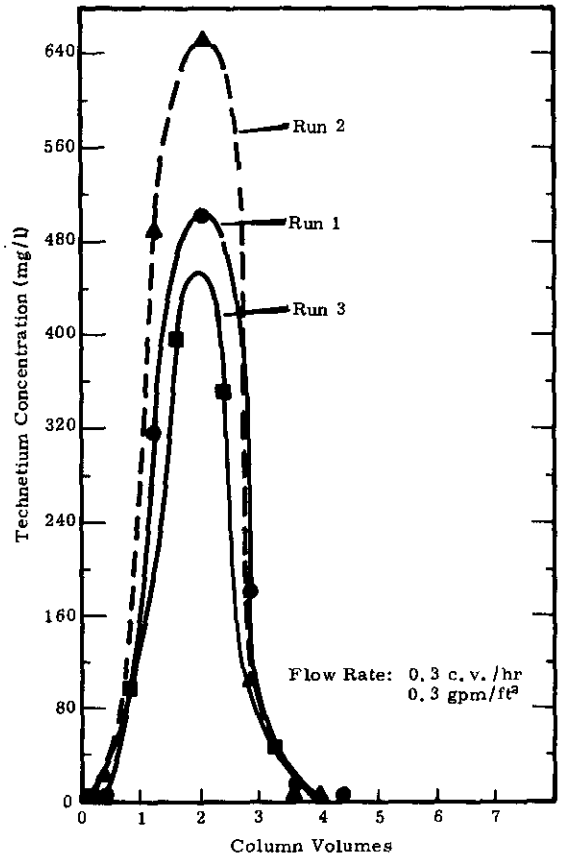

FIGURE IV-111

Elution of Technetium from IRA 401 with 8M Nitric Acid
(Source of Data: HW-73121)

8. References

1. L. L. Ames, Jr. Strontium and Cesium Loading Characteristics of Decalso, Linde 4A and Clinoptilolite Columns, HW-70768. August 15, 1961.

2. L. L. Ames, Jr. and K. C. Knoll. Loading and Elution Characteristics of Some Natural and Synthetic Zeolites, HW-74609. August 10, 1962.

3. S. J. Beard and H. L. Caudill. Technetium Recovery and Storage at B-Plant, HW-83348. July 20, 1964.

4. H. L. Brandt, G. E., Unpublished data.

5. W. V. DeMier, BNW, Unpublished data.

6. Dowex: Ion Exchange, The Dow Chemical Company, Midland, Michigan, 1959.

7. Duolite Ion Exchange Manual, Chemical Process Company, Redwood City, Calif. 1960.

8. E. Gluekauf. "Theory of Chromatography. Part 9. The "Theoretical Plate" Concept in Column Separations," Trans. Faraday Society, 51, pp. 34-44, 1955.

9. Friedrich Helfferich, Ion Exchange, McGraw-Hill Book Co., New York, 1962.

10. K. C. Knoll. Removal of Cesium from Redox Alkaline Supernatant Wastes by Ion Exchange, HW-84105. October 1, 1964.

11. Robert Kunin. Ion Exchange Resins, John Wiley & Sons, Inc., New York, 1958.

12. R. E. Lewis, T. A. Butler, E. Lamb. Recovery of Cs-137 from Fission-Product Wastes and Transport by an Aluminosilicate Ion Exchanger, ORNL-3765. May, 1965.

13. B. W. Mercer, BNW, personal communication.

14. B. W. Mercer, Jr. and L. L. Ames, Jr. The Adsorption of Cesium, Strontium, and Cerium on Zeolites from Multication Systems, HW-78461. August 19, 1963.

15. J. L. Nelson, G. J. Alkire, and B. W. Mercer. "Inorganic-Ion Exchange Separation of Cesium from Purex-Type High-Level Radioactive Wastes", I&EC Process Design and Development Vol. 3, p. 143. April 1964.

16. J. L. Nelson and B. W. Mercer. Ion Exchange Separation of Cesium from Alkaline Waste Supernatant Solutions, HW-76449. January 30, 1963.

17. G. A. Nicholson. Annular Fixed Bed Ion-Exchange Studies, HW-59709. May 12, 1959.

18. Perry's Chemical Engineers' Handbook, 4th Edition, McGraw-Hill Book Co. Inc., New York (1963). p. 16-31.

19. Ibid, p. 5-62.

20. R. P. Popovich. Ion Exchange Recovery of Cesium from Alkaline Supernatant Waste - Scale-Up Studies, HW-83461. September 1964.

21. H. C. Rathvon and P. W. Smith. Waste Management Program Process Flowsheets, HW-78061. July 8, 1963. (Secret)

22. F. P. Roberts, F. M. Smith, and E. J. Wheelwright. Recovery and Purification of Technetium-99 from Neutralized Purex Wastes, HW-73121. March 23, 1962.

23. W. H. Swift. Fission Product and Waste Packaging by Inorganic Zeolite Absorption, HW-73964. June 29, 1962.

24. W. J. Van Slyke, BNW, Unpublished Data.

25. W. J. Van Slyke. Recovery of Ammonium Carbonate from Cesium Ion Exchange Eluates, HW-80814. February 12, 1964.

26. W. J. Van Slyke. Preliminary Report of Chemical Safety for Technetium-99 Recovery by Anion Exchange, BNWL-CC-421. January 5, 1966.

27. H. H. Van Tuyl and L. A. Bray. Recovery of Cesium from Purex Tank Farm Supernatant Solution by Ferrocyanide Precipitation and Absorption on Decalso, HW-70874. October 18, 1961.

G. CESIUM PRECIPITATION PROCESSES

Two precipitation processes have been investigated at Hanford for possible use in removing cesium from fission product wastes. One used phosphotungstic acid to precipitate the dicesium salt from acidic waste solutions; the other used nickel ferrocyanide to precipitate cesium nickel ferrocyanide from alkaline wastes. Although both processes provided excellent cesium recovery in full-level Purex Plant tests, they have been relegated to back-up processes because of unfavorable economics.

1. Cesium Phosphotungatate Process

1.1 Introduction

The cesium salts of many of the heteropoly acids are highly insoluble; and in recent years cesium has been separated as the silicomolybdate, the silicotungstate, the phosphomolybdate, and the phosphotungstate. The latter two compounds are the most insoluble and have been the most extensively studied[5,6,7].

Two cesium salts of phosphotungstic acid have been isolated[5,6]. The tricesium salt ($Cs_3PW_{12}O_{40}.2H_2O$) is preferentially precipitated whenever the mole ratio of cesium to phosphotungstic acid (PTA) exceeds 3. The less soluble dicesium salt ($Cs_2HPW_{12}O_{40}.2H_2O$) is formed exclusively when the cesium to PTA ratio is 2 or less. Similarly, the neutral and acid salts of rubidium, ammonium, and, to a lesser extent, potassium are precipitated because of their low solubility, although cesium is preferentially precipitated in a mixture of those ions. The cesium precipitate is very heavy but settles slowly. Colloidal suspensions have been prepared in the absence of electrolytes, but the presence of 0.3 to 0.5M concentrations of most electrolytes prevents peptization.

1.2 Effect of Variables on Cesium Precipitation

The solubilities of the alkali phosphotungstates are essentially unaffected by nitric acid concentrations over the range of 2 to 10M HNO_3. The solubilities are decreased two- to three-fold by lowering the acid concentration from 2M to zero. Solubilities of the acid phosphotungstate salts of cesium, rubidium, and ammonium in 2M HNO_3 are 0.20, 0.25, and 0.78 g/liter, respectively, at 20 C. An excess of 5 g PTA/liter (0.0016M) lowered the cesium solubility by a factor of 13 under the conditions shown above; the cesium solubilities in 1, 4, 8 and 12M HNO_3 were 0.00084, 0.00125, and 0.0017 g/ Cs/liter, respectively, at 20 C[5]. Temperature had no effect on cesium solubility over the range 20 to 80 C[9].

The soluble phosphotungstates do not interfere in the precipitation of the cesium salt, and traces can be removed by washing with dilute nitric

acid. The insoluble phosphotungstates are those of Rb, K, NH_4, Th, Ag, and Hg(II), and these do interfere unless sufficient PTA is present to precipitate them quantitatively[5]. The chief interfering ion in Purex acid waste would be Rb at about 20 mole percent of the cesium concentration.

1.3 Dissolution of Precipitate

The phosphotungstate salts are not stable in basic solution, breaking down into the constituent phosphates and tungstates[5]. Thus, the precipitate can be dissolved in either ammonia or sodium hydroxide solutions and further purified by ion exchange, as in Section F. The phosphotungstate ion cannot be regenerated, and its loss represents over 95 percent of the chemical cost of the process.

1.4 Chemical Flowsheet and Process Demonstration

The phosphotungstate process was demonstrated in the Purex Plant with full-level acid waste (1WW), using the flowsheet shown in Figure IV-112[3]. The process involved 5 steps:

1) Precentrifugation to remove solid impurities.

2) Precipitation of the cesium by adding dilute PTA to a final concentration of 0.0024M (approximately 0.0016M in excess of that required for the dicesium salt) and digesting at 25 C for one hour.

3) Centrifugation to separate the cesium precipitate from the supernatant liquor (using a bowl holdup time of 9 minutes at 1500 C).

4) Cake washing with four separate portions of 1M HNO_3 (introduced to the centrifuge bowl via high pressure sprays).

5) Cake dissolution with 1M NaOH, using six separate portions introduced via the high pressure spray. (The dilution water shown in the figure would ordinarily not be added.)

The material balance showed 1.5 percent of the cesium in the combined wastes and 92 percent in the product. The cesium loss was slightly (2 to 3-fold) higher than predicted from the above solubility data. Decontamination factors could not be obtained because of cross-contamination of the product with the feed.

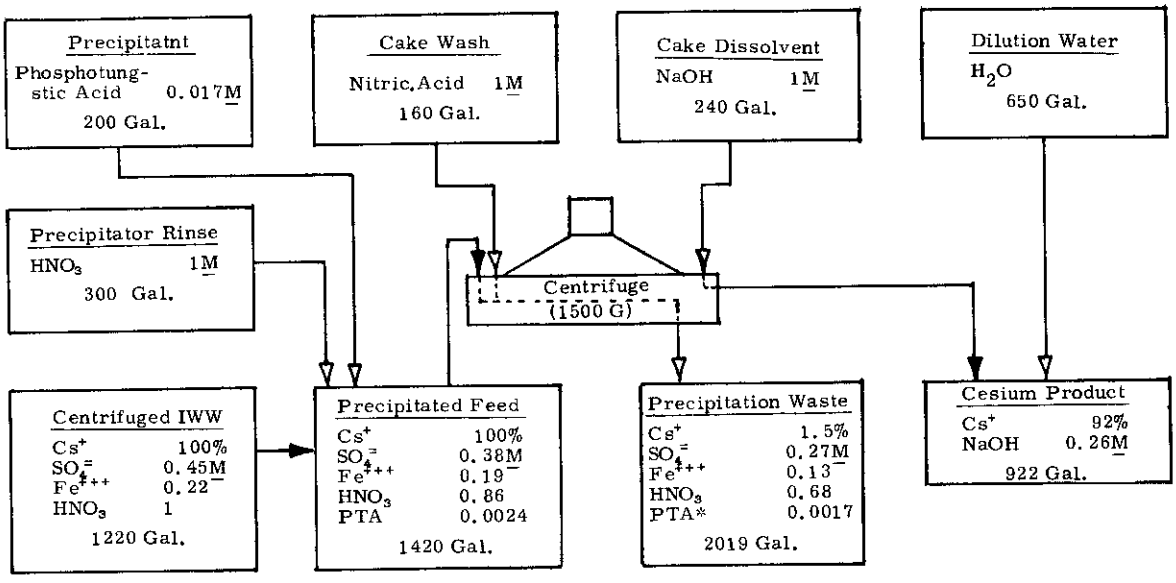

*Neglects the phosphotungstate ion associated with the cesium in the product tank.

FIGURE IV-112

Cesium Phosphotungstate Flowsheet
(Source of Data: HW-81092)

2. Cesium Nickel Ferrocyanide Process

2.1 Introduction

Nickel ferrocyanide scavenging has been extensively used at Hanford to remove cesium from Uranium Recovery Plant waste[4]. The process has since been extended to the removal of cesium from Purex alkaline waste supernates[8] and demonstrated in the Purex Plant with full-level waste[2]. The process is based on the formation of the insoluble double salt of cesium nickel ferrocyanide [$Cs_2NiFe(CN)_6$] in slightly alkaline solutions (pH 7 to 10). Several other metal ferro- and ferricyanides also form insoluble cesium salts [notably those of zinc and iron(III)] but nickel ferrocyanide was selected because it is effective over a wider pH range and to a higher pH (10.6) than the other candidates. Since the pH of Purex tank farm supernates is generally less than 10.5, no pretreatment of the waste appears necessary. Silver ion will displace cesium and nickel from the compound and the cesium can be recovered relatively pure by metathesizing the precipitate with an insoluble silver compound such as Ag_2CO_3.

2.2 Effect of Variables on Cesium Precipitation

The following discussion was abstracted from Reference 8, and is based on laboratory studies with synthetic Purex tank farm supernate (ca. 8×10^{-4} M Cs).

2.2.1 Effect of pH

Cesium losses were insensitive to the pH of the alkaline waste solution up to and including pH 10.6. Losses increased sharply to greater than 50 percent at pH 11. The normal tank farm supernate pH, however, is less than 10.5 and no pH adjustment should be required.

2.2.2 Effect of Excess Reagents

Cesium losses of 2 percent or less were obtained whenever the mole ratio of nickel to cesium was ≥1.25 and the mole ratio of ferrocyanide to cesium was ≥6.25. (For comparison, the stoichiometric mole ratios of nickel and ferrocyanide to cesium would be 0.5.) The cesium loss was more sensitive to the ferrocyanide concentration than to the nickel as the stoichiometric limit was approached; reversing the above mole ratio limits increased the cesium loss from 1.4 percent to 4.9 percent. Thus it appears that sufficient ferrocyanide must be present to provide an excess in solution after stoichiometric precipitation of both the cesium-nickel and nickel ferrocyanides. The precipitate volume in all cases was less than 2 ml/l of feed (with up to 2.5 millimoles of nickel added).

2.2.3 Effect of Temperature

The waste solution was normally digested at room temprature for 30 min after addition of nickel nitrate and for an additional hour after adding potassium ferrocyanide. The losses increased 2 to 3-fold when the digestion temperature was increased to 50 C.

2.3 Metathesis and Dissolution

Silver carbonate, oxide, and nitrate were satisfactorily used to metathesize the cesium nickel ferrocyanide precipitate[8]. Cesium recoveries ranged from 87 to 97 percent when a water slurry of ferrocyanide precipitate was digested for one hour at 80 C with at least a two-fold excess of silver over the theoretical requirement to metathesize a mixture of $Cs_2NiFe(CN)_6$ and $Ni_2Fe(CN)_6$ to $Ag_4Fe(CN)_6$. The digestion temperature must be high; cesium recovery from a zinc ferrocyanide precipitate was only 34 percent when digested at 40 C, compared with 99 percent recovery at 80 C.

The use of an insoluble silver salt, such as the carbonate, in the metathesis provides the cleanest cesium product. With silver nitrate, the excess reagent and the metathesized nickel will remain in solution with the cesium. The silver and nickel can, of course be precipitated later as the carbonates.

2.4 Chemical Flowsheet and Process Demonstration

The nickel ferrocyanide process was demonstrated in a full-scale plant test using aged high-level waste supernatant solution as feed and the Purex Plant head-end precipitation equipment[2]. The cesium recovery was 99 percent with a sodium decontamination factor of 900 using the flowsheet shown in Figure IV-113. The following procedure was employed:

1) The supernatant solution was adjusted with nickel nitrate and sodium ferrocyanide to 0.001 and 0.005M, respectively. The resulting solutions contained 4 and 20 times the respective theoretical nickel and ferrocyanide requirement.

2) The treated solution was digested for one hour at 25 C and centrifuged at 1500 G's at a bowl holdup of 10 to 20 min.

3) The precipitate was washed in the centrifuge with 0.1M $NaNO_3$ and slurried from the centrifuge with 0.05M $AgNO_3$ metathesis solution (3.8 times the theoretical amount required).

4) The slurry was digested at 90 C for one hour and settled at 25 C for one hour before decanting the cesium product through the centrifuge.

5) The remaining solids were metathesized a second time under similar conditions.

6) The waste silver cake was slurried from the centrifuge with 2M NaOH.

The following material balance and decontamination factors were obtained:

Process Solution	Cs, % of Input
Waste Supernate	0.4
Silver Waste Cake	0.4
Cesium Product (1st Metathesis)[2]	90.5
Cesium Product (2nd Metathesis)	12.0
Total	103.3

(a) The first product solution was decontaminated by a factor of 910 from sodium and by factors of 20 to 220 from ZrNb, Ru, and Ce. Less than 4 percent of the added silver and less than 12 percent of the nickel were found in the product.

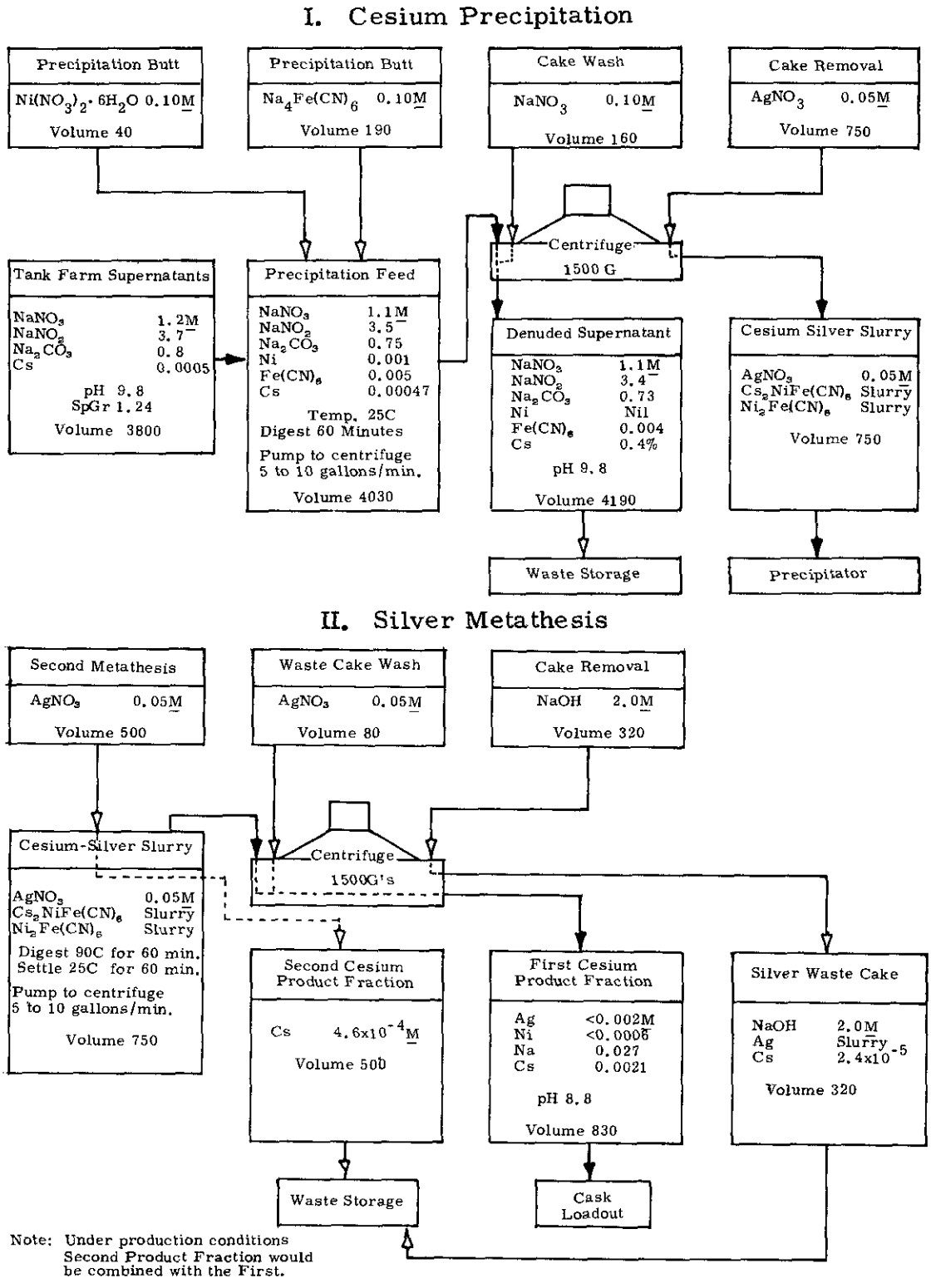

FIGURE IV-113

Nickel Ferrocyanide Process - Purex Plant Test
(Source of Data: HW-75051)

No attempt was made in this test to minimize silver consumption or to obtain high cesium concentrations in the product solution. An optimized flowsheet based on the minimum chemical requirements determined in laboratory studies is shown in Figure IV-114. Improved cesium recovery should be obtained by metathesizing the silver waste cake a second time, reserving the supernate solution for addition to the first metathesis solution of a succeeding run.

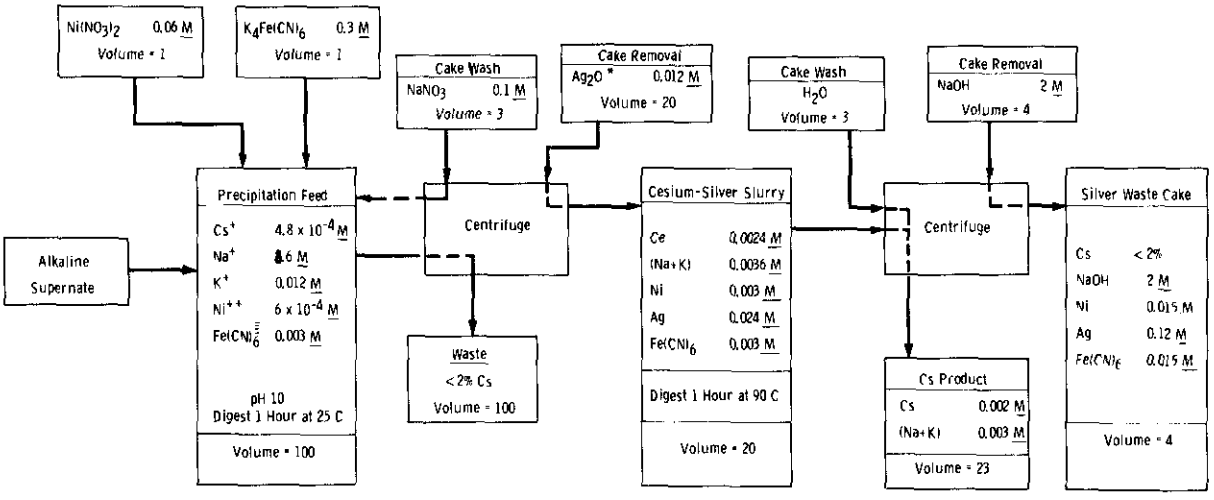

* Silver can be Added as $AgNO_3$ and Later Precipitated as the Carbonate or Hydroxide.

FIGURE IV-114

Optimized Cesium Nickel Ferrocyanide Process
(Derived from data in HW-70874)

3. References

1. M. D. Alford. Cesium Recovery Process, Wet Chemistry Plant Scale Development - Interim Report, HW-58535. January 20, 1959.

2. S. J. Beard and W. C. Schmidt. Purex Plant Test of the Cesium Nickel Ferrocyanide Process, HW-75051. September 25, 1962.

3. S. J. Beard and W. C. Schmidt. Purex Plant Test of the Cesium Phosphotungstate Process, HW-81092. March 16, 1964.

4. R. E. Burns and M. J. Stedwell. "Volume Reduction of Radioactive Waste by Carrier Precipitation", Chem. Eng. Prog., vol 53, p 94, 1957.

5. T. V. Healy and Mrs. B. L. Davies. Alkali Phosphotungstates. Part I: Nature and Solubilities of the Cesium Salts, AERE-C-R-2528. April, 1958; Part V. Extraction of Cesium from Fission Product Solutions, AERE-R-2968, June, 1959.

6. T. V. Healy. "Heteropoly Salts. Part I. Preparation of Some Normal and Acid Phosphotungstates". Radiochimica Acta, 2(3), p. 146-156. 1964.

7. J. Van R. Smit. The AMP Process for Cesium Separation. 1. Adsorption of Cesium on Ammonium 12-molybdophosphate, AERE-R-3884.

8. H. H. Van Tuyl and L. A. Bray. Recovery of Cesium from Purex Tank Farm Supernatant Solution by Ferrocyanide Precipitation and Absorption on Decalso, HW-70874. October 18, 1961.

9. H. H. Van Tuyl, BNW, personal communication, November, 1965.

H. PROPERTIES OF PROCESS MATERIALS

Physical and chemical properties of many of the chemicals used in B-Plant processes are discussed in this section; however, properties of simple and well-known chemicals such as HNO_3, NaOH, etc. are not discussed; and, for convenience, properties of ion exchange materials are discussed in Section F.

1. D2EHPA Extractant Components

1.1 D2EHPA

1.1.1 Introduction

Di-(2-ethylhexyl)phosphoric acid, $(C_8H_{17}O)_2POOH$, (D2EHPA) is a viscous, yellow to amber liquid available from several commercial sources. Presumably, D2EHPA is made by the reaction of 2-ethylhexanol with $POCl_3$ with subsequent treatment with NaOH, but the exact details of manufacture are proprietary. It is a versatile cation exchanger, which, by proper adjustment of conditions, can be used to extract practically all of the actinide and fission product elements of interest in the Waste Management Program.

Commercially-available D2EHPA, as used at Hanford, generally contains only 95 percent to 98 percent D2EHPA. Impurities present include mono-(2-ethylhexyl)phosphoric acid, 2-ethylhexanol, pyro esters, and iron. The latter, if present in sufficient quantity, imparts a red color to the D2EHPA.

1.1.2 Specifications

Purchase specifications[1] for D2EHPA are given in the following table:

D2EHPA Content	95 - 100 Weight percent
Specific Gravity	0.970 - 0.984 20/20 C
Refractive Index	n_D^{20} = 1.443
Solubility	
1) In water	0.01 weight percent at 20 C
2) Water in	2.4 weight percent at 20 C
Flash Point	
Cleveland Open Cup	385 F

1.1.3 Physical Properties

Selected physical properties of D2EHPA are presented in Table IV-58. The properties listed are those considered to be of fundamental interest to the Waste Management Program.

TABLE IV-58

SELECTED PHYSICAL PROPERTIES OF D2EHPA

(Source of Data: Technical Bulletins Union Carbide Co. and Mobil Chemical Co.)

Property	Value
Formula	$(C_8H_{17}O)_2POOH$
Molecular Weight	322.4
Color	Colorless[a]
Density, g/ml.	0.977 (20 C)
Melting Point, °C	<60
Flash Point, °F	385[b] (196 C)
Viscosity, millipoises at 20 C	350
Solubility in water	0.01 Wt.% at 20 C
Solubility of water in	2.4 Wt.% at 20 C
Refractive Index	1.443 (n_D^{20})

(a) When pure. Impure material is frequently yellow to amber.

(b) Cleveland Open Cup.

1.1.4 Radiation Stability

Effects of radiolysis on D2EHPA were first studied by Wagner and Towle in 1958[2]. In a single experiment they irradiated (1 MEV electrons) 100 grams of as-received D2EHPA to a total dose of 2055 watt

hrs/liter and determined the amounts and composition of the resulting gaseous and liquid phases. Their results are summarized in Table IV-59 along with results, for comparison, of a similar experiment with TBP. These results demonstrate that D2EHPA is more susceptible to radiation damage than TBP. Thus, the $-G_m$ (target) value for D2EHPA was 50 percent higher than the value for TBP.

TABLE IV-59

G VALUES AND IRRADIATION PARAMETERS FOR D2EHPA STUDY

(Source of Data: AECU-4053)

Parameters	D2EHPA	TBP
Dose (watt hour/liter)	2055	1900
Dose (100 eV)	4.60×10^{22}	4.26×10^{22}
Dose Rate (100 eV/hr)	3.38×10^{22}	2.84×10^{22}
G (Gas)(a, b)	2.66	2.07
G (Total Acid)(c)	3.62	1.41
G (Monobasic Acid)	--	1.37
G (Dibasic Acid)	1.16	0.03
G (Phospheric Acid)	2.46	<0.01
$-G_m$ (Target) (c, d)	3.42	2.15
G (Nonacidic Liquid Components)(f)	4.32	(e)
G H_2	2.35	(e)
G H_2O	0.84	(e)
G CO	0.06	(e)
G Ethane	0.07	(e)
G Butane	0.03	(e)
G Heptane	0.01	(e)
G Branched Octane	0.54	(e)
G Octanes + Octenes	2.82	(e)

(a) G represents number of molecules produced per 100 electron volts absorbed.
(b) Determined by mass spectrometry.
(c) Determined by electrotitrimetry.
(d) $-G_m$ represents number of molecules of target material destroyed per 100 electron volts absorbed.
(e) Not determined.
(f) Determined by gas chromatography.

Studies of the effects of radiation on D2EHPA-TBP-hydrocarbon diluent solvents have been made by Schulz[3] under batch conditions simulating the B-Plant mainline (Section C 3) D2EHPA extraction process for PAW. In these studies solvents of the approximate composition 0.21M D2EHPA-0.09M NaD2EHP-0.2M TBP-diluted with either Soltrol-170 or NPH (Section H 1.3) were irradiated to a total exposure of 393 watt hrs/liter. This irradiation was accumulated in 20 increments (cycles) in each of which

the dose obtained was 19.6 watt hrs/liter. [This dose per cycle corresponds approximately with that expected for one pass of the D2EHPA extractant through the mainline 1A, 1S, 1B, 1C and cerium strip operations (Figure IV-48) and solvent wash operations (Figure IV-58)]. In each cycle the solvent was irradiated (Co-60) at about 40 C while in emulsion contact (at flowsheet volume ratios) successively with aqueous solutions of the approximate composition of the 1AF, 1SS, 1BX, cerium strip, 10S and 100 Butt streams. Contact times were adjusted so that the radiation dose in the various contacts were 1.6, 2.6, 2.1, 11.9, and 1.4 watt-hrs/liter in the extraction, scrub, partition, cerium strip, and solvent wash steps. Various physical and chemical properties of both solvents were determined at the end of selected cycles. Data obtained in this study are presented in Table IV-60. The strontium 1A Column and Ce(IV) distribution ratio data listed in Table IV-60 are also plotted in Figure IV-115.

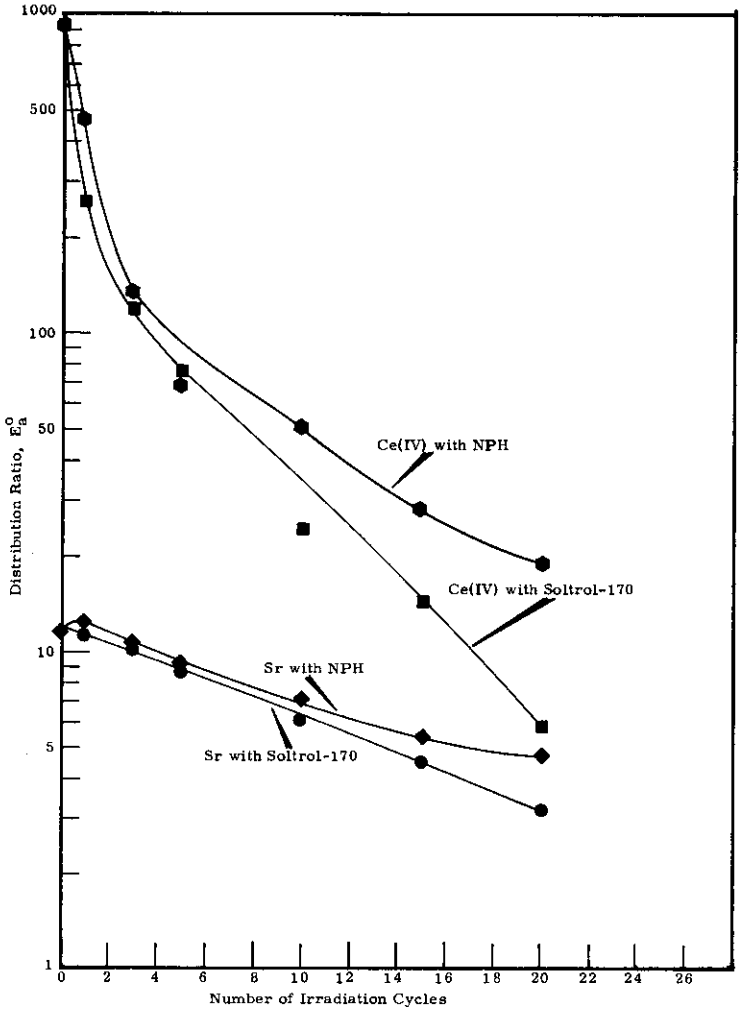

FIGURE IV-115

Effect of Solvent Irradiation on Strontium and Cerium (IV) Extraction
(Source of Data: W. W. Schulz, BNW, unpublished data)

UNCLASSIFIED

TABLE IV-60

PROPERTIES OF IRRADIATED D2EHPA-TBP-DILUENT SOLVENTS

(Source of Data: W. W. Schulz, BNL, unpublished data)

Cycle No.	Cumulative Exposure watt-hrs/liter	M D2EHPA[a]	M Organic Acidity[b]		Density		Viscosity, cP[c]		Disengaging Time, Seconds[d]	
		NPH	Soltrol-170	NPH	Soltrol-170	NPH	Soltrol-170	NPH	Soltrol-170	NPH
0	0	0.317	0.320	0.321	0.8078	0.7868	3.462	1.820	--	69
1	19.7	0.306	0.308	0.312	0.8090	0.7861	3.453	1.803	100	85
3	59.0	0.298	0.307	0.307	0.8094	0.7872	3.648	1.832	113	91
5	98.3	0.386	0.303	0.362	0.8101	0.7881	3.667	1.863	125	100
10	197	0.298	--	0.315	0.8121	0.7916	3.807	1.969	138	97
15	295	0.298	--	0.302	0.8140	0.7921	4.001	2.013	153	124
20	393	0.238	0.236	0.235	0.8158	0.7916	4.135	2.001	167	--

Cycle No.	Cumulative Exposure watt-hr/liter	Strontium E_a^o				Cerium (III) E_a^o		Cerium (IV) E_a^o[h]	
		1A Column[e]		1B Column[f]		1A Column[g]			
		Soltrol-170	NPH	Soltrol-170	NPH	Soltrol-170	NPH	Soltrol-170	NPH
0	0	--	11.6	--	0.0038	29.1	28.5	910	935
1	19.7	11.7	12.5	0.0075	0.0043	31.2	31.5	263	477
3	59.0	10.3	10.9	0.0033	0.0021	31.6	33.5	119	135
5	98.3	8.52	9.37	0.0022	0.0020	28.5	28.7	76.6	68.3
10	197	6.07	7.17	0.00088	0.0011	29.9	30.9	24.2	51.6
15	295	4.50	5.43	0.00041	0.0006	--	20.5	14.4	28.3
20	393	3.10	4.74	0.00034	0.0012	19.7	21.9	5.67	19.3

(a) Preliminary data obtained by gas chromatagraphic procedure outlined in RL-SA-32.
(b) Titrated with sodium hydroxide after washing with 6M nitric acid and water.
(c) Capillary tube viscometer.
(d) Ten ml solvent contacted with 10 ml of synthetic 1AF of composition listed in Table IV-10 (PAW-B). Disengaging time measured with standard apparatus discribed in HW-27807.
(e) Ten ml contacted at 25C with an equal volume of synthetic 1AF as in (d) above except 1AF was 0.18M citrate and 0.20M acetate. The pH of the final aqueous was 4.7.
(f) The organic phase from (e) was scrubbed twice with 1/5 portions of 0.5M formic acid and then contacted for 10 minutes at 25C with 1/5 volume of 0.028M nitric acid.
(g) Ten minute contact at 50C with equal volume of 1AF of composition indicated in (d).
(h) Sixty minute contact at 25C with equal volume of 2.0M HNO_3, 0.2M $(NH_4)_2S_2O_8$, 0.02M $AgNO_3$, 0.0071M $Ce(NO_3)_3$, 0.0144M $La(NO_3)_3$ solution.

UNCLASSIFIED

The outstanding effects observed in these experiments was the decreased strontium extraction capacity of the irradiated solvents. Fall-off in strontium extraction capacity in these experiments was uniform (Figure IV-115) with irradiation dose and was greatest for the solvent containing Soltrol-170 as diluent. The decreased strontium extraction capacity is most easily accounted for in terms of radiolytic destruction of D2EHPA as expected from the results of Wagner and Towle cited earlier. D2EHPA concentrations of the final (20-cycle) solvents as determined by both titrimetry and gas chromatography indicate irradiation to 393 watt hrs/liter destroyed about 25 percent of the D2EHPA.

Irradiated solvents obtained in these experiments also extracted Ce(III) (Table IV-60) and Ce(IV) (Figure IV-115) less efficiently than unirradiated extractants. The decrease in Ce(III) extraction capacity probably also reflects destruction of D2EHPA. Most of the decrease in Ce(IV) extraction capacity, however, is due to generation of reducing impurities in the organic phase since treatment of the 20-cycle solvents with HNO_3-$KMnO_4$ according to the procedure described in Section C 6.3.3 restored Ce(IV) E_a^o's to values typical of unirradiated solvent. Data in Figure IV-115 also offer additional proof (Section C 3.5.3) of the advantages of NPH over Soltrol-170 as the hydrocarbon diluent for B-Plant extractant.

Specific gravity and viscosity of both the NPH and Soltrol-170 solvents (Table IV-60) increased upon irradiation. Associated with these changes were increased disengaging times under 1A Column conditions.

Consequences of solvent radiolysis with respect to economic and operating characteristics of B-Plant solvent extraction processes had not been evaluated fully at the time this part of the manual was written. Further laboratory studies to aid in defining these consequences were also in progress as this manual was written.

1.2 Tributyl Phosphate

1.2.1 Introduction

Tri-n-butyl phosphate (TBP), $(C_4H_2O)_3PO$, is a viscous, colorless liquid which is produced by the reaction of n-butyl alcohol with either phosphorous oxychloride ($POCl_3$) or phosphorous pentoxide (P_2O_5) with subsequent caustic treatment and distillation. It is used as the extractant in the Purex solvent-extraction process because of the specificity of the strong complexes it forms with uranium and plutonium. In the B-Plant it is added to D2EHPA-kerosene solutions to increase the solubility of salt forms of D2EHPA in hydrocarbon diluents.

1.2.2 Specifications

The purchase specifications[1] for TBP are given in the following table:

Butanol Content	Max. 0.05 weight percent
Acidity	Less than 0.02N
Water Content	No turbidity when one volume TBP is mixed with 19 volumes of 60° Be' gasoline at 20 C.
Suspended Solids	Max. 0.01 weight percent
Specific Gravity	0.973 to 0.983 at 20/20 C

1.2.3 Physical Properties

Selected physical properties of TBP are presented in Table IV-61. The properties listed are those considered to be of fundamental interest to the Waste Management Program. A more complete listing and discussion of the physical properties of TBP, particularly in connection with its use in the Purex plant, is given in Reference 4.

1.2.4 Chemical Properties

The chemical properties of TBP were investigated in detail in connection with the development of the Purex process and are discussed in detail in Reference 4. Only highlights of this chemistry are discussed here since in the B-Plant the functions of TBP are primarily those of a diluent and not an extractant.

In general, the chemical properties of TBP are those typical of esters derived from inorganic acids. The formation by TBP of coordination complexes with uranium and plutonium nitrates is, of course, the basis of the Purex process. Also of great importance to the Purex process is hydrolysis of dealkylation of TBP which can occur in both acid and alkaline systems. The acid hydrolysis occurs through cleavage of carbon-oxygen congs to form butanol, dibutyl phosphate (DBP), monobutyl phosphate (MBP); and eventually orthophosphoric acid. Alkaline hydrolysis involves cleavage of phosphorous-oxygen bonds and stops with the formation of the alkaline salt of DBP[5,6,7]. The acid hydrolysis rate increases with HNO_3 concentration and temperature and decreases with dilution of the TBP. Hydrolysis rates for DBP and MBP are not accurately known except that TBP hydrolyzes faster than DBP and DBP hydrolyzes faster than MBP[8]. Recent studies have shown that factors such as chemical composition of the diluent[9], and the presence of

air[10], as well as the acidity[11] and radiation influence the rate of hydrolysis of TBP. In the Purex plant the presence of MBP and/or DBP in the solvent gives rise to several process problems including higher waste losses and poorer fission product decontamination.

Because the B-Plant extraction processes operate at acidities below 1M HNO_3 it is expected that acid hydrolysis of TBP will not occur to the same extent as it does in the Purex process. Also, since D2EHPA is itself an alkyl phosphoric acid, the consequences of formation of other alkyl phosphoric acids (i.e., DBP and MBP) are far less in the B-Plant than in the Purex plant. In all of the Strontium Semiworks experience there has been no indication whatsoever of any operational difficulties directly attributable to acid or base hydrolysis of TBP.

TABLE IV-61

SELECTED PHYSICAL PROPERTIES OF TBP

(Source of Data: HW-31000)

Property	Value
Formula	$(n\text{-}C_4H_9O)_3PO$
Molecular Weight	266.3
Color	Colorless
Density, g/ml	0.9730 (25 C)
Melting Point, °C	-80
Flash Point, °F	295[a] (146 C)
Viscosity, millipoises at 20 C	37.4
Solubility in water	0.6 vol. %
Solubility of water in	7.0 vol. %
Refractive Index	1.4226 (n_D^{25})
Boiling Point, °C at 760 mm Hg pressure	289
Surface Tension, dynes/cm at 25 C	25

(a) Tag Closed Cup.

1.2.5 Radiation Stability

Studies of the radiolysis of TBP and TBP-diluent systems have been made by several investigators[12-16]. The most recent and most comprehensive studies have been made by Wagner and coworkers[15,16]. All workers agree the principal products of radiolysis are hydrogen, DBP MBP, and, at high doses, a polymeric solid of unknown composition. The data presented in Table IV-62 are typical of those obtained in irradiation ofTBP.

Evidence presently available (Section H 1.1.4) indicates D2EHPA is more susceptible to radiation damage than is TBP. Hence the most important effects of radiolysis of B-Plant solvent (i.e., lower E_a^o values) are associated primarily with destruction of D2EHPA molecules and only slightly with destruction of TBP.

There is no evidence to indicate any of the radiolytic products of TBP will seriously interfere with B-Plant D2EHPA extraction processes. Rather, it is estimated the principal consequences of TBP radiolysis will be associated with the disappearance of TBP itself.

TABLE IV-62

MATERIAL BALANCE DATA AND G VALUES FOR TBP IRRADIATION

1900 watt hours/liter

(Source of Data: AECU-4052)

	Wt. (gms)	(MW)	Moles	$G^{(a)}$	$-G_m^{(b)}$
TBP (Initial)	103.8	266	--	--	--
TBP (Recovered)	63.37	266	--	--	--
TBP (Destroyed)	40.43	266	0.152	--	2.15
Gas	2.64	18	0.147	2.07	--
DBP	20.35	210	0.097	1.37	--
MBP	0.33	154	0.0021	0.03	--
H_3PO_4	0.03	98	0.0003	0.01	--
Polymer	17.08	266	0.0642	--	--

(a) G represents number of molecules produced per 100 electron volts absorbed.

(b) $-G_m$ represents number of molecules of target material destroyed per 100 electron volts absorbed.

1.3 Diluents

1.3.1 Introduction

The diluent for D2EHPA and TBP in B-Plant solvent extraction processes is a highly refined hydrocarbon mixture, boiling in the kerosene range (190 to 270 C). Two commercially available solvents meeting specifications for the diluent are Soltrol-170 (Phillips Chemical Co.) and NPH*. NPH is the Hanford designation for a mixture of normal paraffin

* Tentatively selected for the B-Plant at the time of writing.

hydrocarbons, principally C_{10} through C_{13}, sold by the South Hampton Co., Houston, Texas. Other diluents which have been used at Hanford in laboratory studies of B-Plant processes are Shell E-2342 and Shell Deodorized Spray Base. Amsco 125-82 has been used at ORNL.

1.3.2 Physical Properties

The physical properties of some of the commercially available diluents that have been used or considered during the development of D2EHPA solvent extraction processes for use in the B-Plant are shown in Table IV-63.

TABLE IV-63

PROPERTIES OF DILUENTS[a]

Property	NPH[d,c]	Soltrol-170[d,e]	Soltrol-170[b,f]
Density at 25 C, g/ml		0.7728	0.7764
Index of Refraction, n_D^{25}		1.4315	1.4289
Viscosity at 25 C millipoises	14	-	22.9
Flash Point, °F Tag Closed Cup	161	192	183
Aromatic Content, Vol.%	Nil	Nil	-
Boiling Range and Midpoint, °C		208-239 (225)	214-235 (225)

(a) The properties of commercial diluents are subject to slight variations from batch to batch.

(b) Properties as determined on one sample at Hanford.

(c) Data from memo by H. C. Rathvon, Isochem Inc., Feb., 1966.

(d) Properties as cited by manufacturer.

(e) Data supplied by Phillips Petroleum Co.

(f) Properties determined by L. Burger, Battelle-Northwest Laboratory.

The solubility of diluent in water is very slight. For example, the solubility of Shell E-2342 diluent in water is less than 0.004 gram per liter at 25 and 50 C[17].

1.3.3 Chemical Properties

Chemical inertness toward process chemicals of of major concern in the selection of a diluent for use in the B-Plant. Under normal operating conditions the diluents preferred (NPH or Soltrol-170) for use in the B-Plant are chemically unreactive in contact with process solutions at ambient temperatures.

With the aim of finding an optimum diluent for use in the Purex process a considerable volume of laboratory work at various USAEC sites has been devoted to determination of the properties and reactions of various hydrocarbon diluents. One of the most significant reactions which such dilutes can undergo is nitration. Nitrogen oxides are known to nitrate aromatics and olefins and also to oxidize carbon side chains of aromatic nuclei to carboxylic acids at room temperature, although the reactions are exceedingly slow. The reactions of nitrogen oxides with naphthenes or paraffins occur in the vapor phase and very slowly in the liquid phase at room temperatures[18].

Investigations of the stability of diluents to HNO_3 and HNO_2 have shown that naphthenic-type diluents (such as Shell E-2342) are less stable to nitration reaction than paraffinic diluent (e.g. NPH and Soltrol-170)[19,20]. Nitration of diluents produces alkyl nitrites and nitrates, aliphatic nitro and nitroso compounds, and carboxylic acids[20]. In the Purex process the presence of some of these nitration products in the process solvent increases fission product extraction and thus affects decontamination adversely.

The extent to which diluent nitration will occur, if at all, in B-Plant operation and the consequences thereof, if any, are unknown at the time this manual is written.

1.3.4 Radiation Stability

The effects of irradiation of D2EHPA-TBP-diluent solutions on B-Plant extraction processes are discussed in Section H 1.1.4. As pointed out there, the adverse effects of solvent radiolysis, except for decreased Ce(IV) extraction capacity, appear to be largely attributable to destruction of D2EHPA and/or TBP and not to radiation induced decomposition of diluents or of products produced thereby. Decreased Ce(IV) extraction capacity of irradiated B-Plant solvent appears, however, to be definitely related to the radiolytic production of reducing impurities from the hydrocarbon diluent as shown by the data in Figures IV-115 and IV-46. As stated before, NPH is more stable than Soltrol-170 to production of such impurities.

2. Complexants and Buffering Agents

2.1 Introduction

Various organic acids are used in B-Plant solvent extraction processes to suppress extraction of unwanted metal ions and to provide necessary pH control in extraction, scrub, and partition column operation. These reagents include carboxylic, polycarboxylic, and polyaminocarboxylic acids. Selected physical and chemical properties of these reagents are tabulated in this section of the manual.

2.2 Physical Properties

For convenience in B-Plant operations the complexants (Section C 2.4) EDTA, DTPA, and HEDTA are purchased and used as aqueous solutions of the sodium salts Na_4EDTA, Na_5DTPA, and Na_3HEDTA, respectively. Selected physical properties[21] of these aqueous solutions are listed in Table IV-64. Certain other complexants and/or buffering agents - acetic, hydroxyacetic, citric, tartaric, and oxalic acids - are most conveniently purchased and used in the acid form. Selected physical properties[22,23] of this latter group of reagents are listed in Table IV-65.

2.3 Chemical Properties

2.3.1 Tabulated Acid Dissociation Constants

Tabulated in Table IV-66 are acid dissociation constants for complexing agents of interest to B-Plant separation processes. These constants were used to calculate the amount of hydrogen ion complexed by the various ligands as a function of pH (Figure IV-116).

2.3.2 Tabulated Metal Complex Formation Constants

Formation constants for the formation of complexes between certain of the complexants and metal ions of interest to B-Plant processes are listed in Table IV-67. The significance of these formation constants is discussed in Section C 2.4.

Except for complexes with DTPA data listed in Table IV-67 were taken from the critical compilation of Bjerrum, Schwarzenbach, and Sillen from publication earlier than Jan. 1, 1956[24]. Gaps in Table IV-67 ordinarily signify that the particular formation constant has not been measured. In some cases, however, the missing formation constant has been measured but not, in the opinion of Bjerrum et.al. with sufficient accuracy to warrant inclusion in their compilation. Formation constants for DTPA complexes have been measured since 1956 principally by Chaberek and coworkers[25,26].

TABLE IV-64

PHYSICAL PROPERTIES OF COMPLEXANTS

(Source of Data: Technical Data Sheet 104, Fisher Scientific Co.)

Properties shown refer to as-purchased aqueous solutions of indicated complexants.

	Na_4EDTA	Na_3HEDTA	Na_5DTPA
Structural Formula	$NaOOCCH_2$ / $NaOOCCH_2$ NCH_2CH_2N CH_2COONa / CH_2COONa	$HOCH_2CH_2$ / $NaOOCCH_2$ NCH_2CH_2N CH_2COONa / CH_2COONa	$NaOOCCH_2$ / $NaOOCCH_2$ $NCH_2CH_2NCH_2CH_2N$ CH_2COONa / CH_2COONa / CH_2COONa
Molecular Weight	380.2	344.2	513.1
pH (1% solution)	11.3±0.5	11.3±0.5	11.3±0.5
Bulk Density (lbs/gal)	10.8	10.8	11.0
Specific Gravity (25/25C)	1.29-1.32	1.27-1.30	1.30-1.34
Percent by Weight in Aqueous Solution	48	48	40.2
Freezing Point of Aqueous Solution (F)	-27	-20	Below-20
Calcium Chelation Value[a]	100	120	80
Complexant Concentration, M	1.30	1.57	1.05

(a) Milligrams $CaCO_3$ per gram of chelating agent at pH 11.

TABLE IV-65

PHYSICAL PROPERTIES OF COMPLEXANTS

(Source of Data: Encyclopedia of Chemical Technology)

	Citric Acid	dextro Tartaric Acid	Oxalic Acid Dihydrate	Hydroxyacetic Acid[a] Solid	Hydroxyacetic Acid[a] 70% Aq. Solution	Acetic Acid Glacial	Acetic Acid 80% Aq. Solution
Empirical Formula	$C_6H_8O_7$	$C_4H_6O_4$	$C_2H_2O_4 \cdot 2H_2O$	$C_2H_4O_3$		$C_2H_4O_2$	
Structural Formula	CH_2COOH / $HO-C-COOH$ / CH_2COOH	COOH / H-C-OH / HO-C-H / COOH	HOOC-COOH	$HOCH_2COOH$		CH_3COOH	
Appearance	Colorless, translucent crystals	Colorless Crystals	Colorless, Odorless Crystals	Colorless, Odorless Crystals	Colorless liquid	Colorless liquid	Colorless liquid
Melting Point (C)	153	169 - 179	--	79-80	9.5	16.6	--
Specific Gravity	1.542 (d_4^{18})	1.76 (d_4^{20})	1.653 (d_4^{20})	1.49 (d_4^{25})	1.261 (d_4^{25})	1.0492 (d_4^{20})	1.070 (d_4^{20})
Refractive Index (n_D^{20})	--	1.4955	1.475	--	--	1.3718	--
Boiling Point (C)	--	--	--	100 (decomp)	112.5	118.1	--
Solubility in Water	Temp. / Wt. %	Temp. / g/100gH_2O	%$(COOH)_2$=	Very Soluble	--	Miscible in all proportions	
	10C / 54.0	0C / 115	$3.42+0.168t+0.0048t^2$ (0to60C)				
	20 / 59.2	20 / 139	$0.333t+0.003t^2$ (50 to 90C)				
	50 / 70.9	50 / 195					
	100 / 84.0	100 / 343					

(a) Also known as Glycolic Acid.

TABLE IV-66

SELECTED ACID DISSOCIATION CONSTANTS

(Source of Data: J. Bjerrum et. al. Stability Constants Part 1)

(Log Dissociation Constants ($pK = -Log_{10}K$), 20 - 30C)[a]

Ligand	pK_1	pK_2	pK_3	pK_4	pK_5
Acetate	4.61	--	--	--	--
Hydroxyacetate	3.88	--	--	--	--
Tartrate	2.88	3.94	--	--	--
Citrate	3.06	4.76	6.40	--	--
HEDTA	2.64	5.33	9.73	--	--
EDTA	1.99	2.67	6.16	10.26	--
DTPA	1.79	2.56	4.42	8.76	10.42

(a) For reactions:

$$H_nL = H_{n-1}L + H^+; \quad K_1 = \frac{[H_{n-1}L]\,[H^+]}{[H_nL]}$$

$$H_{n-1}L = H_{n-2}L + H^+; \quad K_2 = \frac{[H_{n-2}L]\,[H^+]}{[H_{n-1}L]}$$

etc.

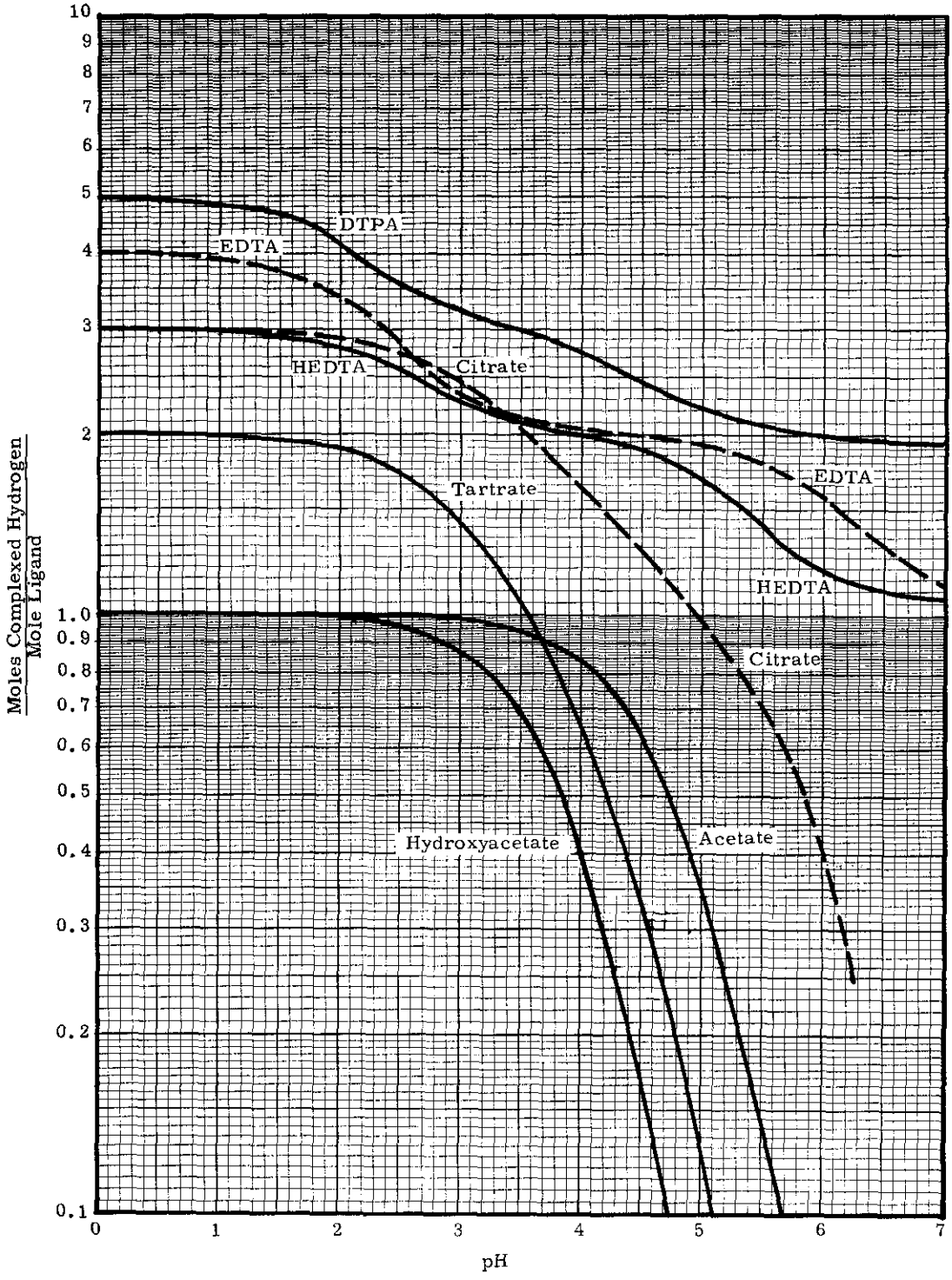

FIGURE IV-116

Hydrogen Ion Complexing by Ligands
(Source of Data: HW-72666)

TABLE IV-67

SELECTED FORMATION CONSTANTS

(Source of Data: DTPA - Chabarek and co-workers,
Others - J. Bjerrum et. al. Stability Constants, Part I)

Log Formation Constants, 20-30C. See Discussion Section C 2.4

Metal Ion	Acetic Acid Log K_1	Hydroxyacetic Acid Log K_1	Citric Acid (H_4L) Log K^M_{MHL}	DTPA Log K_1	EDTA (H_4L) Log K_1	EDTA (H_4L) Log K^M_{MHL}	HEDTA Log K_1	NTA Log K_1	Oxalic Acid Log K_1	Tartaric Acid (H_2L) Log K_1	Tartaric Acid (H_2L) Log K^M_{MHL}
Ba^{+2}	0.39	1.02	2.84	8.63	7.76	2.07	--	6.41	ca. 2.3	1.62	0.88
Ca^{+2}	0.53	1.59	4.84	10.74	10.7	3.51	8.0	8.17	ca. 3	1.80	1.11
Pb^{+2}	2.52	--	6.50	--	18.04	10.61	--	11.8	--	--	--
Mg^{+2}	0.51	1.33	--	9.34	8.69	2.28	--	7.0	2.55	1.36	0.92
Mn^{+2}	--	--	--	15.1	14.04	6.9	10.7	7.44	3.89	--	--
Ni^{+2}	0.74	--	--	20.2	18.62	11.56	17.0	11.26	5.3	9.9	--
Sr^{+2}	0.43	1.31	2.85	9.68	8.63	2.30	--	6.73	2.54	1.65	0.91
UO_2^{+2}	2.38	--	--	--	--	--	--	--	--	--	--
Al^{+3}	--	--	--	--	16.13	8.4	--	--	--	--	--
Ce^{+3}	1.68	--	--	21.0	16.0	--	14.08	10.71	6.52	--	--
Eu^{+3}	--	--	--	22.91	17.35	--	15.21	--	--	--	--
Fe^{+3}	--	4.7	11.85	28.6	25.1	16.2	--	15.87	9.4	18.1	--
La^{+3}	--	--	--	19.96	15.5	--	13.22	10.37	--	--	--
Y^{+3}	--	--	--	22.4	18.09	--	14.49	11.41	--	--	--
Cr^{+3}	--	--	--	--	24.0	--	--	--	--	--	--

3. Other Process Materials

3.1 Sodium Persulfate (peroxy disulfate)

3.1.1 Physical Properties[27]

Formula	$Na_2S_2O_8$
Formula Weight	238.11
Appearance	White crystals

Solubility in water:

Temperature, °C	Grams $Na_2S_2O_8$ per 100 ml H_2O
15	53.3
20	54.7
25	56.2
30	57.6
35	59.0
40	60.5
45	61.9
50	63.3

In contrast, the solubility of $K_2S_2O_8$ in water at 20 C is only 5.3 grams per 100 ml of water[28]; primarily on this basis $Na_2S_2O_8$ is preferred over $K_2S_2O_8$ for oxidizing Ce(III) to Ce(IV) (Section C 3.5.3).

The solubility of $Na_2S_2O_8$ in 2M HNO_3 at 25 C is about 1.7M whereas the solubility of $K_2S_2O_8$ in 0, 1, 2, and 4M HNO_3 at 25 C is 0.22, 0.26, 0.28, and 0.37M, respectively[29].

3.1.2 Stability

Temperatures up to about 100 C applied to the solid $Na_2S_2O_8$ for short periods of time cause only negligible decomposition[27]. Noticeable decomposition occurs upon further increase in temperature, and it becomes quite rapid in the 150 to 200 C range. The presence of moisture tends to increase the rate of decomposition by heat, but no tendency towards explosive decomposition has been observed.

Catalytic decomposition of solid $Na_2S_2O_8$ may take place in contact with various agents, notably platinum black and certain metals. Many metals such as lead, silver, copper, magnesium, zinc, cadmium, manganese, iron, nickel, and cobalt react easily with $Na_2S_2O_8$, as will organic oxidizable matter.

Aqueous solutions of $Na_2S_2O_8$ are reported to be quite stable at ordinary temperatures and may be kept for a few hours even at elevated temperatures[27]. It is estimated a 5 percent solution of $Na_2S_2O_8$ in distilled water at 25 C would lose only 2 percent of its original active oxygen after one week. The same system, however after one week at 50 C would be expected to lose about 80 percent of the original active oxygen. Of course, contamination of the solution with catalytically active impuri ties such as traces of heavy metals, easily oxidizable organic matter, etc., will tend to decrease stability.

In pilot plant studies the decomposition of persulfate ion in 2M HNO_3 (silver free) followed a first-order rate law with a half-life of 11 to 12 days when stored at room temperature in either glass bottles or stainless steel tanks. The results, plotted in Figure IV-117, indicate that the decomposition rate is independent of the cation associated with the persulfate ion. The rate constant calculated from these data is 4×10^{-5} min^{-1}, a value in agreement with published results for similar conditions[30].

Finally, an aqueous solution of $Na_2S_2O_8$, saturated at room temperature, has an initial pH of about 3.5. Hydrolysis according to the reaction

$$2Na_2S_2O_8 + 2H_2O \rightleftharpoons 2Na_2SO_4 + 2H_2SO_4 + O_2$$

occurs with formation of acid and a drop in pH.

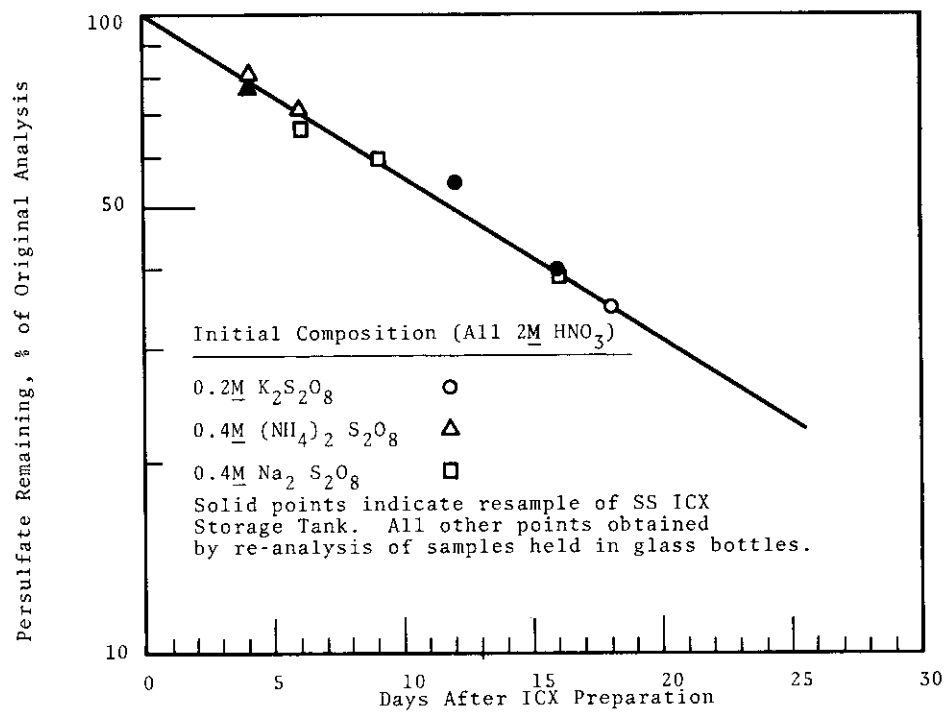

FIGURE IV-117

Persulfate Stability in Silver-Free 1CX
(Source of Data: BNWL-173)

3.2 Silver Nitrate

3.2.1 Physical Properties[31]

Formula	$AgNO_3$
Formula Weight	169.89
Appearance	Colorless rhombic crystals
Specific Gravity	4.352 (19 C)
Melting Point	212 C

Solubility in water:

Temperature, °C	Grams $AgNO_3$ per 100 grams H_2O
0	122
20	222
40	376
60	525
80	669
100	952
120	1900

3.2.2 Chemical Properties

Silver nitrate prepared by crystallization from aqueous solution has a neutral reaction. The salt and its solutions appear not to be sensitive to light in the absence of organic matter. When heated above its melting point, it decomposes, giving first $AgNO_2$ and oxygen, and finally silver and oxides of nitrogen.

The role of silver ion as a catalyst in oxidation of Ce(III) to Ce(IV) with $Na_2S_2O_8$ has been referred to in Section C 3.5.3.

3.3 Hydrogen Peroxide

3.3.1 Physical Properties[32]

Since 100 percent H_2O_2 is not usually available or readily prepared, physical constants of aqueous solutions are of greater practical value than those of pure H_2O_2. Selected properties for 0 to 50 percent H_2O_2 solutions are tabulated in Table IV-68; a more extensive listing is given by Schumb et. al.[33].

TABLE IV-68

SELECTED PHYSICAL PROPERTIES OF AQUEOUS HYDROGEN PEROXIDE SOLUTIONS

(Source of Data: Schumb, et.al. Hydrogen Peroxide)

Density at 20C			Refractive Index		Viscosity at 20C		Boiling Point 760 mm		Surface Tension at 25C		Heat of Decomposition at 25C and 1 atm.	
M H_2O_2	wt% H_2O_2	Density	wt% H_2O_2	n_D^{20}	wt% H_2O_2	cP	wt% H_2O_2	C	wt% H_2O_2	dynes/cm	wt% H_2O_2	Kcal gm-mole H_2O_2
0.0	0.0	0.998	0.0	1.333	0.0	1.005	0.0	100.0	0.0	72.75	0.0	-22.62
3.04	10.	1.033	10.1	1.339	8.68	1.011	--	--	--	--	10.	-22.63
6.31	20.	1.071	20.	1.346	19.06	1.045	17.3	103.0	17.05	73.41	20.	-22.65
9.75	30.	1.111	30.1	1.353	37.33	1.120	32.0	106.9	26.31	74.12	30.	-22.68
12.3	40.	1.153	40.0	1.360	42.72	1.140	44.7	111.5	37.33	74.67	40.	-22.73
17.6	50.	1.196	50.1	1.367	49.05	1.170	55.7	116.7	49.76	75.68	50.	-22.80

3.3.2 Chemical Properties

Hydrogen peroxide acts both as an oxidizing and as a reducing agent. In general, substances with lower oxidation potential than H_2O_2 are readily oxidized, and substances with higher oxidation potential are readily reduced.

Hydrogen peroxide is used as an oxidizing agent with a large number of organic compounds(34). For example, amines are oxidized to amine oxides, certain alcohols to aldehydes, and, under proper conditions, carboxylic acids to carbon dioxide and water. It is this last reaction with oxalic and citric acids that is of most importance to B-Plant operations (Sections E 8 and C 4.3.5).

3.3.3 Stability

The stability of H_2O_2 depends upon the degree to which it has been purified. Schumb reports the decomposition of highly purified, unstabilized, concentrated H_2O_2 to be as low as 0.0008 to 0.00002% per hour at 50 C(33). Several factors seem to influence the decomposition of H_2O_2, the most important of which are: 1) temperature, 2) trace catalysis of certain cations, 3) certain active surfaces, 4) suspended matter, such as dust particles, 5) pH, and 6) radiation.

The heterogenous decomposition of H_2O_2 by a large number of surfaces is well known. Finely divided metals, such as silver, all the platinum group metals and their oxides, mercury, manganese, and its oxides, as well as activated charcoal decompose H_2O_2 very rapidly and completely. The most effective catalyst in this group is colloidal osmium, which catalyzes the decomposition in concentrations as low as 9×10^{-11} grams per cu. cm.

Hydroxide ions cause rapid decomposition of H_2O_2. The effect of pH on the decomposition of H_2O_2 has been studied by Schumb(33).

3.4 Ferrous Sulfamate

3.4.1 Physical Properties[4]

Formula	$Fe(SO_3NH_2)_2$
Formula Weight	248.03
Appearance	2.5M solution is blue-green[35]
Melting Point	135 C[36]
Solubility	The saturation concentration in water is approximately 3.6 to 3.8M at 25 C.

The anhydrous salt is highly deliquescent and is believed to absorb 5 molecules of water of hydration[37].

3.4.2 Reactions and Stability

Ferrous sulfamate is employed in the D2EHPA extraction recovery of neptunium from PAS solution and is used to reduce Np(V) to the extractable Np(IV) state (see Section E 3).

High pH contributes to the stability of sulfamate ion towards hydrolysis, while low pH is necessary for the stability of Fe(II) towards air oxidation and consequently precipitation. The stability of a ferrous sulfamate solution toward precipitation of Fe(III) is satisfactory upon maintaining the pH of the solution at 2 or slightly less with a 2 to 3% excess of sulfamic acid[35]. The over-all stability of a ferrous sulfamate solution maintained at a pH of 2 in a vessel containing an inert-gas blanket is limited by the rate of hydrolysis of sulfamate ion. This rate is approximately 0.1% per day at 25 C and increases to over 4% per hour at 80 C.

Fe(II) is autocatalytically oxidized to Fe(III) by HNO_3. The oxidation mechanism involves HNO_2, the destruction of which prevents the autocatalytic reaction. Sulfamate ion reacts rapidly and completely with nitrite ion according to the reaction[38]:

$$HNO_2 + NH_2SO_3^- \rightarrow N_2 + H_2O + H^+ + SO_4^= .$$

Hydrazine (Section H 3.5) is also used in the D2EHPA neptunium extraction process to destroy nitrite.

3.5 Hydrazine

3.5.1 Physical Properties

For use in Hanford separation plants hydrazine is purchased as a 35 percent aqueous solution. Selected physical properties of this solution are listed below[39]:

Formula	$H_2NNH_2 \cdot H_2O$
Hydrazine Molarity in Solution	11.1
Appearance	Colorless liquid
Boiling Point	109.7 C (755.5 mm)
Melting Point	-63 C
Specific Gravity	1.02 (30 C)
Viscosity at 30 C	1.0149 centipoises
Solubility in water	Infinite
Freezing Point	-63.5 C
Flash Point	None
Fire Point	None

High concentrations of hydrazine can be ignited but aqueous solutions containing 40 percent N_2H_4 or less have no flash point.

3.5.2 Chemical Properties

Hydrazine is derived from ammonia by the substitution of an NH_2 group for a hydrogen. It forms two series of salts that may be represented by the formulas: $N_2H_4 \cdot HA$ and $N_2H_4 \cdot 2HA$. Its monoacid salts, characterized by the ion ($N_2H_5^+$), are correctly designated as hydrazonium (hydrazinium) salts.

Hydrazine is a basic substance which exhibits marked ability to act as an electron-pair donor to form coordination compounds. In aqueous solution N_2H_4 acts primarily as a monoacid base; $K_b = 10^{-6}$ at 25 C[40].

Hydrazine is also a strong reducing reagent as indicated by a potential of 0.23 volt for the couple[41]:

$$N_2H_5^+ = N_2 + 5H^+ + 4e^-$$

Hydrazine is thus capable of reducing metallic ions such as copper, silver, gold, and platinum to the elemental state. The standard oxidation potential for the Np(IV) - Np(V) couple,

$$Np^{+4} + 2H_2O = NpO_2^+ + 4H^+ + e^-$$

is $E^o = -0.739$ volt[41]. Thus, thermodynamically N_2H_4 is capable of reducing Np(V) to Np(IV). The rate of N_2H_4 reduction of Np(V) to Np(IV) appears to be considerably slower than the rate with ferrous sulfamate, however (Section H 3.3 and Reference 42). In the D2EHPA neptunium re-

26. R. Harder and S. Chaberek. "Interaction of Rare Earth Ions with Diethylenetriaminepentaacetic Acid", J. Inorg. Nucl. Chem. vol. 11 pp. 197-209. 1959.

27. Author not stated. FMC Sodium Persulfate, Technical Bulletin No. 122. FMC Corp., New York. Undated.

28. R. E. Kirk and D. F. Othmer, eds. Encyclopedia of Chemical Technology, vol. 10. New York: Interscience Encyclopedia, Inc. (1951).

29. L. A. Bray and F. P. Roberts. Purification of Rare Earths from Hanford Wastes by Solvent Extraction, BNWL-187. February, 1966.

30. G. L. Richardson. Continuous Separation of Cerium from Trivalent Rare Earths by Persulfate Oxidation and D2EHPA Solvent Extraction: Pilot Plant Studies, BNWL-173. November, 1965.

31. R. E. Kirk and D. F. Othmer, eds. Encyclopedia of Chemical Technology, vol. 12. New York: Interscience Encyclopedia, Inc. (1951).

32. Ibid. Volume 7.

33. W. C. Schumb, C. W. Satterfield, and R. L. Wentworth. Hydrogen Peroxide. New York: Reinhold Pub. Co. (1955).

34. W. C. Schumb. "Stability of Concentrated Hydrogen Peroxide Solutions", Ind. Eng. Chem. vol. 41 pp. 992-1003. 1949.

35. F. Clagett. The Preparation of Ferrous Sulfamate, HW-13697. June 10, 1949.

36. R. G. Monk. Sulphamic Acid and Its Salts, CEI-2. October, 1948.

37. Author not stated. Sulfamic Acid and Its Salts, Technical Bulletin, E. I. duPont de Nemours & Co. Undated.

38. E. L. Zebroski and R. C. Feber. Sulfamic Acid in the Redox Process, KAPL-89. July 15, 1948.

39. Author not stated. SCAV-OX (35% Hydrazine Solution) for Removing Oxygen from Boiler Feedwater, Olin Mathieson Chem. Corp., Baltimore, Md. 1956.

PART III, Cont.

PROCESS

CHAPTER V

PROCEDURES AND FLOW DIAGRAMS

By

R. Y. Lyon

G. L. Borsheim

J. A. Falkoski

Waste Management Process Engineering

PART III: PROCESS, Con't.

CHAPTER V

PROCEDURES AND FLOW DIAGRAMS

Page

A. FLOW DIAGRAMS 504

B. NORMAL PROCEDURES 506

1. Feed Preparation Procedures 506
   1.1 Current Acid Waste (PAW and ZAW) 506
      1.1.1 Carbonate Metathesis of PAW and ZAW . . . 507
      1.1.2 PAW and ZAW solids Leaching 508
      1.1.3 Waste Handling 509
   1.2 Purex Acid Sludge 509
      1.2.1 Sulfate Precipitation of PAS 509
      1.2.2 Carbonate Metathesis of PAS 510
      1.2.3 Waste Handling 511

2. Solvent Extraction Procedures 511
   2.1 Feed Makeup 512
      2.1.1 Current Acid Waste (PAW and ZAW) 512
      2.1.2 Acid Sludge Waste (PAS) 512
   2.2 1A and 1S Columns 513
      2.2.1 Current Acid Waste (PAW) 513
      2.2.2 Current Acid Waste (ZAW) 514
      2.2.3 Acid Sludge Waste (PAS) 514
   2.3 1B Column 514
      2.3.1 Current Acid Waste (PAW) 514
      2.3.2 Current Acid Waste (ZAW) 514
      2.3.3 Acid Sludge Waste (PAS) 515
   2.4 1C Column (PAW, ZAW, PAS) 515
   2.5 Solvent Treatment 515
   2.6 Strontium Product Concentration and Storage . . 516
   2.7 Waste Handling 516
      2.7.1 Current Acid Waste (PAW and ZAW) 516
      2.7.2 Acid Sludge Waste (PAS) 517

3. Ion Exchange Procedures 517
   3.1 Loading Cycle 517
   3.2 Sodium Removal Cycle 518
   3.3 Cesium Elution Cycle 518
   3.4 Cesium Product Concentration and Eluant Regeneration 518
   3.5 Recycle of Product 518
   3.6 Waste Handling 518
   3.7 Bed Makeup and Removal 519

C. SPECIAL PROCEDURES 519

1. Solvent Extraction Purification of Strontium 519
   1.1 Feed Makeup 519
   1.2 1A and 1S Columns 519
   1.3 1B Column 520
   1.4 Solvent Treatment 520
   1.5 Strontium Product Concentration 521
   1.6 Waste Handling. 521

2. Solvent Extraction Purification of Promethium. 522
   2.1 Promethium-Cerium Separation. 522
   2.2 Solvent Treatment 522
   2.3 Promethium Product Purification and Concentration 523

D. SOLVENT EXTRACTION STARTUP AND SHUTDOWN PROCEDURES 524

1. Startup Procedures 524
   1.1 Cold Feed Makeup. 524
   1.2 Filling Columns and Tanks 525
   1.3 Establishment of Flow Rates 525
   1.4 Startup From Equilibrium Shutdown 526
   1.5 Startup From Stripping Shutdown 526

2. Shutdown Procedures. 526
   2.1 Equilibrium Shutdown. 527
   2.2 Stripping Shutdown. 527
   2.3 Complete Shutdown 527

E. DETECTION AND REMEDY OF OFF-STANDARD CONTITIONS. 528

1. Methods of Detecting Off-Standard Conditions 529
   1.1 Instruments 529
   1.2 Samples 530

2. Excessive Product Losses 530

3. Column Flooding. 531

4. Emulsion 531

5. Excessive Entrainment. 532

6. Poor Product Quality 533

F. REWORK OF OFF-STANDARD PROCESS STREAMS 533

1. Off-Standard Strontium Product 534

2. Off-Standard Promethium Product. 534

3. Off-Standard Cesium Product. 534

4. Ion Exchange Wastes. 534

5. Solvent Extraction Wastes. 534

TABLES

V-1 Wafrax Design Capacity 505
V-2 B-Plant Processing Capacities. 505
V-3 Detection and Remedy of Off-Standard Conditions, High Solvent Extraction Waste Losses 535
V-4 Detection and Remedy of Off-Standard Contitions, Poor Strontium and Promethium Quality. 536
V-5 Legend and Notes Used in Figures 546

FIGURES

V-1 Basic Flowsketch of Waste Management Processes 537
V-2 Feed Preparation - Current Acid Waste. 538
V-3 Feed Preparation - Acid Sludge Waste 539
V-4 Extraction - 1A and 1S Columns 540
V-5 Partition and Strip - 1B and 1C Columns. 541
V-6 Strontium Product Concentration and Storage. 542
V-7 Organic Treatment. 543
V-8 Cesium Ion Exchange. 544
V-9 Cesium Product Concentration and Storage 545

PART III: PROCESS, Cont.

CHAPTER V

PROCEDURES AND FLOW DIAGRAMS

In this chapter, flow diagrams and outlines of the operating procedures for the following B-Plant processing operations are presented:

1. Stored waste feed preparation
2. Current acid waste feed preparation
3. Solvent extraction battery operations for strontium-rare earth separation, strontium purification, and cerium-promethium separation
4. Ion exchange recovery of cesium from stored supernates

The main emphasis is on the normal procedures for steady-state operation, startups, and shutdowns. Off-standard conditions and methods of their detection and remedy are presented. The reader should refer to the Standard Operating Procedures for detailed processing procedures.

A. FLOW DIAGRAMS

The Waste Management Fractionization Plant (B-Plant) is capable of processing current Purex Acid Waste (PAW and ZAW), stored Purex supernatant liquid waste (PSN and PSS), stored Purex sludge waste (PAS), and stored Redox supernatant liquid waste (RSN, RSXN and RSS). Sources of feed are discussed in detail in Chapter III of this manual.

The equipment is sized to permit simultaneous processing of the stored high-level and current waste so as to work off the stored waste inventory within five to seven years. Instantaneous processing rates which formed the original basis for design are based on the Waste Management Program Process Flowsheets[1,2] and are presented in Table V-1[3]. Current capacities based on the B-Plant Phase III Flowsheets[4] which will be used at startup are presented in Table V-2.

DECLASSIFIED

TABLE V-1

WAFRAX DESIGN CAPACITY

Stream	Process	Instantaneous Rate Gallons/Day*
PAW	CSREX	3,000
PAW	D2EHPA	3,300
PAS	Head End	4,000
PAS	CSREX	12,000
PAS	D2EHPA	13,200
PSN	Ion Exchange	46,450
RSXN**	Ion Exchange	46,450
RSN***	Ion Exchange	46,450

*Based on as-received volumes before head-end treatment

**Aged supernatant from 241-SX Farm

***Aged supernatant from 241-S Farm

TABLE V-2

B-PLANT PROCESSING CAPACITIES

	Process	Stream Basis	Gallons/Day*
1)	PAW Solids Treatment	PAW	4,600
2)	PAW Solvent Extraction	PAW (1AF)	4,600 (6,900)
3)	ZAW Solids Treatment	ZAW	3,900
4)	ZAW Solvent Extraction	ZAW (1AF)	3,900 9,200
5)	PAS Sludge Preparation	PAS (TU)	4,200 (88 TU)
6)	PAS Metallic Ion Removal	PAS	3,600
7)	PAS Solvent Extraction	PAS (1AF)	19,000 (4,800)
8)	PSN Ion Exchange	PSN	30,000
9)	PSS Ion Exchange	PSS	35,000

*Based on full operating capacity at 100% over-all operating efficiency

[redacted]

DECLASSIFIED

A basic flow sketch of the operations performed within the B-Plant is presented in Figure V-1. Flow diagrams of various segments of the operation schematically showing the process streams and equipment are presented as folllows:

Figure	Function
V-2	Feed Preparation - Current Acid Waste
V-3	Feed Preparation - Acid Sludge Waste
V-4	Extraction - 1A and 1S Columns
V-5	Partition and Strip - 1B and 1C Columns
V-6	Strontium Product Concentration and Storage
V-7	Organic Treatment
V-8	Cesium Ion Exchange
V-9	Cesium Product Concentration and Storage

Tank volumes as shown are the approximate volumes to overflow; consequently, the maximum working volumes are about 80% of the volumes given. The reader should refer to Part V, Chapters IX through XII (Plant and Equipment) and Chapter XIII (Instrumentation) for the mechanical and physical details of the facilities.

B. NORMAL PROCEDURES

1. Feed Preparation Procedures

Prior to solvent extraction processing, both current acid waste and sludge waste are given a feed preparation "head-end" treatment. For current acid waste the feed preparation process removes solids present in the waste and recovers greater than 95 percent of the strontium and rare earths associated with the solids. For sludge waste the feed preparation process removes a large portion of the iron, aluminum and magnesium present while concentrating the strontium and rare earths by means of a sulfate precipitation step. The procedures for feed preparation are discussed below.

1.1 Current Acid Wastes (PAW, ZAW)

The PAW and ZAW solutions received from the Purex plant via lag storage in the 244-AR Vault, are the concentrated and denitrated high level wastes from solvent extraction processing of irradiated aluminum-clad, (PAW) and zircaloy-clad, (ZAW) reactor fuels. The solutions contain a large amount of fission-product decay heat and inert salts. The solutions as received also contain 1-10 percent solids by volume (primarily phosphates, sulfates and silicates). Roughly 55 percent of the strontium and 70 percent of the rare earths are associated with these solids. A carbonate metathesis process is used to recover greater than 95 percent of the strontium and rare earths from these solids.

1.1.1 Carbonate Metathesis of PAW and ZAW

The carbonate metathesis process consists basically of the following steps. (Refer to Figure V-2).

1. PAW (or ZAW) is pumped from TK-001 in the 244-AR Vault to TK-11-2 in B-Plant. TK-11-2 is a precipitation tank with 3400 gallons working volume which has been specially modified by the addition of a large, low-level coil and extra temperature elements for this service. The PAW solids are allowed to settle in TK-11-2 for a period of approximately two hours.

2. After the solids have settled, the supernatant liquid is decanted from TK-11-2 (using a special jet to minimize solids transfer) through centrifuge G-12-2 to receiver tank TK-12-1 and then stored in TK-9-2.

3. Metathesis solution (0.5M NaOH-1M Na_2CO_3) from scale tank TK-12-2B is used to slurry any solids from G-12-2 back to TK-11-2 via TK-11-1. Concurrently, hot metathesis solution is added to TK-11-2 from scale tank TK-11-2C. The solids and solution in TK-11-2 are digested at 75 C for one hour which converts the fission products associated with the solids (primarily sulfates) to a carbonate-hydroxide precipitate. The precipitate is then allowed to settle for two hours.

4. At the completion of the metathesis settling step, the waste metathesis solution is decanted through the centrifuge to TK-12-1 and sampled. This waste solution is then discarded to high-level waste tank TK-25-2 via TK-11-1 after centrifuge clean-out, Step 5, is completed.

5. Carbonate cake wash solution (0.1M Na_2CO_3) is used to slurry any solids from G-12-2 back to TK-11-2 via TK-11-1. Additional cake wash solution is concurrently added to TK-11-2 and the solution agitated to remove residual sulfates. The solids are then allowed to settle for approximately one-half hour. The supernate is then decanted through G-12-2 to TK-12-1, sampled, and discarded to waste via TK-11-1 as in Step 4.

6. A nitric acid solution (1.5M) is used to remove the solids from G-12-2 back to TK-11-2 via TK-11-1 and is concurrently added to TK-11-2 to dissolve the carbonate-hydroxide cake remaining in TK-11-2. When TK-12-1 and TK-31-2 are available, this solution is slurried (using a minimum heel jet) to TK-12-1 via G-12-2 and immediately transferred to TK-31-2 for storage since the TK-12-1 cooling coil is inadequate for this small volume.

7. Any undissolved solids (primarily siliceous in nature) remaining in TK-11-2 and G-12-2 are slurried to TK-11-1, sampled and discarded to high-level waste.

The over-all time cycle for this process is approximately 15.5 hours, however it should be possible to trim to 13.5 to 14.5 hours as experience is gained during operation.

The process is basically quite simple, but the high-heating solids present major problems. The solids cake, if allowed to dry out in a vessel, would quickly reach temperatures high enough to partially volatilize some of the fission products such as ruthenium and cesium and also create a severe corrosion problem in the vessel. The same problems would arise in the centrifuge if large quantities of the cake were present or if the cake is not quickly removed. The centrifuge is susceptible to mechanical failure much more quickly with large quantities of high-heating cake. Therefore, the operating procedures are designed to minimize the cake volume transferred to the centrifuge and to minimize the periods during which the solids cake cannot be adequately cooled. Special equipment and instrumentation, such as the two jets and additional temperature elements on TK-11-2, have been provided to help control these problems. The radiation detection elements in the cells are also used to indicate the volumes of solids present in, and transferred between vessels. A special safety circuit is provided on scale tank TK-11-1E to automatically dump the TK-11-1E contents (approximately 70 gallons of water) to TK-11-2 if excessive cake temperatures are encountered. If for some reason processing is interrupted, it may be necessary to add water or process solution to the vessels via the chemical add scale tanks to maintain adequate cooling capability.

1.1.2 PAW, ZAW Solids Leaching

The original process planned for PAW, ZAW solids treatment in Cells 11 and 12 was a leach process. This process used the same equipment and the same general type of operations. The PAW was settled, decanted through the centrifuge and the centrifuge washed back to the settling tank (TK-11-2). Successive leaches of 5M HNO_3 and 2M NaOH - 0.1M sodium tartrate were then performed on the solids in much the same manner as the carbonate metathesis of 1.1.1 above.

Strontium recovery from solids with the leaching process was low, approximately 25 percent, with the added disadvantage that excessive amounts of ZrNb-95 were recovered which produced problems in solvent extraction. The poor performance of the leaching process led to the development of the carbonate metathesis process.

1.1.3 Waste Handling

The three waste streams from the PAW and ZAW solids treatment process, the metathesis waste, carbonate cake wash and the final solids slurry waste are all high-level waste. Therefore, these wastes are jetted directly to the high-level waste tank, TK-25-2, after sampling without waiting for results. Initially the solutions may be held for sample results to confirm that strontium waste losses are low. If necessary, the solutions can be routed back to TK-11-2 from TK-11-1 for rework.

1.2 Purex Acid Sludge (PAS)

The PAS feed received in B-Plant for feed preparation is quite different from the current acid waste feeds. The solution is not nearly as radioactive as PAW or ZAW since cesium is not present and the short-lived fission products have decayed to low levels. However, the PAS contains high concentrations of metallic ions, primarily iron and aluminum, which would make solvent extraction more expensive if a feed pretreatment step were not used. Therefore, the objective of the PAS feed treatment process is to remove these undesirable metallic ions while still maximizing the recovery of strontium and long-lived rare earths. A sulfate precipitation-carbonate metathesis process is used to obtain this objective, and in addition, a concentration factor of approximately 10 is obtained. The over-all strontium and rare earth losses for the combined process are estimated to be 7.5 and 5 percent, respectively.

1.2.1 Sulfate Precipitation of PAS

The sulfate precipitation for metallic ion removal consists of the following steps (refer to Figure V-3).

1. The PAS batches (approximately 1400 gallons) are transferred from the CR-Vault lag storage tank TK-003 to the B-Plant sulfate precipitation tank TK-31-3. Sufficient 6M $NaHSO_4$ is added to make the final solution 1M in sulfate ion. A solution of 1.8M Na_2CO_3 is used to neutralize the solution to a pH of approximately 1.0 (both the bisulfate and carbonate solutions are added through scale tank TK-31-3A). The solution pH is critical, so a pH cell is installed in the TK-31-3 sampler with a readout in the operating gallery. The solution is heated to a temperature of 80 C after neutralization.

2. After an initial digestion of one hour, 1M $Pb(NO_3)_2$ solution is added from scale tank TK-31-3E to make a final lead concentration of 0.02M. This provides a $PbSO_4$ carrier precipitate for the strontium sulfate. Digestion is continued for an additional hour.

3. The digested slurry is allowed to settle and then the supernatant, using a special high temperature jet, is decanted through centrifuge G-32-2 to waste receiver tank, TK-32-1. The waste is sampled in TK-32-1 and transferred to TK-24-1 for concentration in the Cell 23 Concentrator and ultimate disposal to an In-Tank Solidification facility.

4. This procedure is repeated twice more for a total of three sulfate strikes. The $Pb(NO_3)_2$ addition may be reduced on the second and third strikes since $PbSO_4$ is already present in the solution. The sulfate cake in TK-31-3 is washed with a small volume of water from TK-31-3A, which is decanted through the centrifuge and combined with the waste in TK-32-1.

5. The cake in TK-31-3 and centrifuge G-32-2 is slurried directly to the metathesis tank TK-31-1 with water. Tank 31-3 is then ready to begin a new series of sulfate strikes.

The estimated time cycle for each sulfate strike is approximately 8 hours; the over-all time cycle for a three-strike process is 28 hours.

1.2.2 Carbonate Metathesis of PAS

The PAS carbonate metathesis process is similar to the one used for metathesis of the PAW solids. (See section B. 1.1.1)

1. The water slurried sulfate cake in TK-31-1 is butted with an approximately equal volume of metathesis solution (5M NaOH - 0.5M Na_2CO_3) from scale tank TK-31-1F. The solution is heated to 80 C and digested for one-half hour. The sulfate precipitate is converted during the digestion to a carbonate-hydroxide precipitate.

2. The slurry is then allowed to settle and cool and the metathesis supernatant is decanted to TK-32-1 via centrifuge G-32-2.

3. The cake is washed twice with 0.1M Na_2CO_3 solutions to remove residual sulfate. The cake washes are decanted through G-32-2 and combined with the metathesis waste in TK-32-1. Tank 32-1 is then sampled and routed to the Cell 23 Concentrator.

4. The cake in TK-31-1 is dissolved with a 1.2M nitric acid solution. The acid solution is added to TK-31-1 via TK-32-2C and centrifuge G-32-2 thereby recovering any carbonate cake in the centrifuge.

5. The dissolved carbonate cake product is decanted to the PAS feed storage tank, TK-33-1. A small water flush is added to TK-31-1 via G-32-2 and likewise decanted to TK-33-1. Batches of treated PAS are jetted from TK-33-1 to TK-29-2 for feed make-up during PAS solvent extraction campaigns.

The metathesis time cycle is approximately 10 hours. It should be possible to carry on the metathesis process concurrently with the sulfate precipitation strikes with a minimum amount of conflict for centrifuge time.

1.2.3 Waste Handling

The wastes from the sulfate precipitation and carbonate metathesis of PAS are relatively low-level wastes. Therefore, after sampling in TK-32-1, the wastes are routed to the Cell 23 Concentrator via TK-24-1. If necessary, the sulfate strike waste solutions will be neutralized in TK-32-1 before transfer to TK-24-1. The Cell 23 Concentrator effluent is routed to an ITS unit in the tank farm for ultimate disposal. Routes are available from TK-32-1 for rework if sample results show this to be necessary.

2. Solvent Extraction Procedures

Upon completion of appropriate head-end treatments, PAW, ZAW, and PAS aqueous wastes are processed by solvent extraction to separate the strontium and rare earths from the balance of metallic and fission product impurities.

The crude head-end product is chemically adjusted to make suitable feed for the solvent extraction battery. Complexant is added to aid in obtaining the desired metallic ion distribution ratios in the 1A Column. A ten to twenty percent excess of complexant is generally added to the feed to ensure adequate complexing and provide contingency for feed composition variations. A buffering agent is added to provide pH control since the metallic ion distribution ratios are sensitive to pH fluctuations. A small amount of tartaric acid is also added to the feed to improve the extraction kinetics in the 1A Column. The pH is adjusted with sodium hydroxide or nitric acid as necessary.

The separation is effected in a battery of four piston-pulsed columns - 1A, 1S, 1B, and 1C. The strontium and rare earths are extracted into the organic phase [di(2-ethylhexyl)phosphoric acid with tributyl phosphate modifier and normal paraffin hydrocarbon diluent] in the 1A Column. Cesium, other fission products, and the majority of the metallic impurities remain in the aqueous phase and are removed as waste. Additional decontamination of impurities, particularly sodium, is obtained in the 1S scrub column.

Strontium and the rare earths are partitioned in the 1B Column with the strontium being stripped into the aqueous stream and the rare earths and americium remaining in the organic stream. The rare earths and americium are stripped from the organic in the 1C Column. Strict pH control is essential throughout the extraction battery to ensure the proper separation of metallic ion and fission product impurities from the strontium and rare earth product streams.

Operating conditions are similar for processing PAW, ZAW, and PAW with the main difference being in the complexant used and the flow rates of the aqueous and organic streams.

Modifications of the flowsheet for specific product recovery and purification are discussed in Section C of this chapter.

2.1 Feed Makeup

2.1.1 Current Acid Waste (PAW and ZAW)

Feed for the solvent extraction system is made up in the 1AF Make-up Tank (TK-29-2). Current acid waste supernatant from the feed preparation step is jetted from the storage tank, TK-9-2, to TK-29-2. For PAW makeup, the premixed crude feed butt consisting of metallic ion complexant, buffering agent, and tartaric acid is gravity fed to TK-29-2 from the operating gallery scale tank, TK-29-2A. Because of the large volume of chemicals required for ZAW makeup, the complexant is added to TK-29-2 prior to the balance of the premixed butt.

The pH of the butted feed is initially adjusted to approximately 6.0 with sodium hydroxide from TK-29-2B. Dissolved carbonate cake solution from the feed preparation step is then jetted from TK-31-2 to TK-29-2 causing the pH to drop. Alternating additions of sodium hydroxide and dissolved cake solution are made in such a manner as to maintain the pH in the range of 3.0 to 6.0 which prevents precipitation of iron hydroxide at high pH or cerium, strontium, and rare earth sulfates at low pH. Final adjustment of the pH to flowsheet conditions is made with sodium hydroxide or nitric acid. When the feed has been adjusted to the desired pH, it is jetted to the 1AF Feed Tank (TK-29-3).

2.1.2 Acid Sludge Waste (PAS)

Feed for the solvent extraction system is made up in the 1AF Make-up Tank (TK-29-2). Treated acid sludge waste is jetted from the storage tank, TK-33-1, to TK-29-2. The premixed feed butt consisting of metallic ion complexant, buffering agent, and tartaric acid is gravity fed to TK-29-2 from TK-29-2A. Dilution water required to establish satisfactory aqueous to organic flow rates in the columns and to extend the run time to

reduce fission product losses during startup and shutdown of the solvent extraction battery is added to TK-29-2 from TK-29-2A. The pH of the butted feed is initially adjusted with sodium hydroxide from TK-29-2B. Final adjustment is made with sodium hydroxide or nitric acid. When the feed has been adjusted to the desired pH, it is jetted to the 1AF Pump Tank (TK-29-3).

2.2 1A and 1S Columns

2.2.1 Current Acid Waste (PAW)

The 1A (T-30-1) and 1S (T-29-1) columns form an extraction and scrub system. The feed (1AF) to the 1A Column is pumped from TK-29-3 to the top of the column where it joins with the sodium scrub stream (1SR) from the 1S Column. The aqueous streams form the dispersed phase and flow down through the organic extractant (1AX) to the bottom disengagement section, where the aqueous-organic interface is located and separation of the phases is effected.

The organic extractant (1AX) is pumped from the 1AX Pump Tank (TK-30-3) to the bottom of the 1A Column. The organic flowing up the column forms the continuous phase. When the column is operated at flowsheet conditions, essentially all of the strontium, rare earths, calcium, manganese, magnesium, uranium and yttrium are extracted. Small amounts of the iron, aluminum, and zirconium-niobium are also extracted. The organic phase (1AP), now the product-bearing stream, overflows from the upper disengagement section and is gravity fed to the bottom of the 1S Column where it forms the continuous phase.

The aqueous stream (1AW) leaving the 1A Column, bearing the bulk of the Cs-134, Cs-137, Sb-125, ZrNb-95, Ru-106, other fission products, radioactively inert salts, and approximately 1% of the Sr and RE, flows by gravity from the lower disengagement section to the 1AW Receiver Tank (TK-30-2). (See Section B. 2.7.1 for further routing.)

In the 1S Column, the organic is contacted with an aqueous scrub stream (1SS) for reduction of the sodium concentration to approximately 0.001M. The scrub solution is composed of buffering agent for pH control and a small concentration of complexing agent to remove trace amounts of undesired metallic impurities carried over from the 1A Column. The 1SS butt is pumped from TK-29-1F to an in-line blending tee for mixing with water to provide the desired concentration and flow rate as the 1SS stream to the top of 1S Column. After passing through the organic continuous 1S Column the aqueous stream enters the bottom disengagement section where the aqueous-organic interface is located and separation of the phases is effected. The aqueous waste scrub stream (1SR) is then jetted to the upper part of 1A Column. The organic (1SP) overflows from the top of the column to the 1BF Feed Pump Tank (TK-28-4).

2.2.2 Current Acid Waste (ZAW)

The 1A and 1S Column operation is similar to that for PAW (Section 2.2.1). Recoveries of Sr and rare earths (RE) are slightly less than for PAW processing. Approximately 2% of the Sr and 10% of the RE are not extracted and remain in the aqueous waste stream (1AW) leaving the 1A Column. It is expected that RE recovery can be significantly improved with minor flowsheet development.

2.2.3 Acid Sludge Waste (PAS)

The 1A and 1S Column operation is similar to that for PAW (Section 2.2.1), although the various stream flowrates are different in order to provide pH control and an acceptable solvent loading. When the columns are operated at flowsheet conditions, essentially all of the strontium, rare earths, calcium, magnesium, manganese, uranium, and yttrium are extracted along with small amounts of iron, aluminum, and lead. Since many of the short-lived fission products present in PAW and ZAW are not present in PAS, the radioactivity level of the 1AW is significantly lower than for current acid wastes. The 1AW stream contains small amounts of Sr-90, Ce-144, Pm-147, and Sm-151.

2.3 1B Column

2.3.1 Current Acid Waste (PAW)

The 1BF Feed Pump Tank (TK-28-4) continuously receives the 1SP (organic overflow from the 1S Column) and pumps it to the bottom feed point of the 1B partition column (T-28-1) where it becomes the continuous phase. Strontium is stripped from the organic phase with dilute nitric acid (1BX). The 1BX nitric acid butt is pumped from TK-28-1F to an in-line blending tee for mixing with water to provide the desired concentration and flow rate to the top of the 1B Column. The interface in the organic-continuous column is located in the bottom disengagement section. The exiting aqueous phase (1BP), bearing about 98 percent of the strontium entering the column, 0.3 percent of the rare earths, the sodium not removed in the 1S Column, some calcium and trace amounts of other metallic impurities such as aluminum, iron, and zirconium-niobium flows by gravity to the 1BP Product Receiver (TK-28-2). The organic stream containing the rare earths overflows from the top of the column to the 1CF Pump Tank (TK-27-4).

2.3.2 Current Acid Waste (ZAW)

The 1B Column operation is similar to that for PAW (Section 2.3.1). Strontium recovery ($\sim$97%) is expected to be slightly less than that accomplished during PAW processing.

2.3.3 Acid Sludge Waste (PAS)

The 1B Column operation is similar to that for PAW (Section 2.3.1), although the various stream flow rates are different in order to provide pH control.

2.4 1C Column (PAW, ZAW, PAS)

The 1CF Pump Tank (TK-27-4) continuously receives the organic overflow from the 1B Column and pumps it to the bottom feed point of the 1C Column (T-27-1) where it becomes the dispersed phase since the 1C Column is operated aqueous continuous with a top interface. Rare earths, the balance of the calcium, and trace amounts of other metallic impurities and fission products are removed by stripping with strong nitric acid (1CX). The 1CX butt (concentrated nitric acid) is gravity fed from the 2718 HDR to an in-line blending tee for mixing with demineralized water to the desired acid concentration and flow rate as the 1CX stream to the top of the 1C Column where it becomes the continuous phase. The aqueous stream leaving the 1C Column (1CP), bearing 90-99 percent of the rare earths entering the column, flows by gravity from the lower disengagement section to the 1CP Receiver Tank (TK-27-2). The stripped organic stream (1CW) overflows from the top of the column to the 1CW Receiver (TK-26-3).

2.5 Solvent Treatment (PAW, ZAW, PAS)

The solvent received in TK-26-3 from the 1C Column is pumped batchwise to TK-27-3 where it is contacted with a sodium hydroxide - sodium tartrate wash solution (10S) for removal of yttrium, cerium, zirconium-niobium, ruthenium, uranium, nitric acid, iron, and small amounts of other metallic impurities. The primary D2EHPA degradation product mono(2-ethylhexyl)phosphoric acid is also removed. The wash solution is gravity fed to TK-27-3 from AMU TK H-321 (via the 2707 HDR). After each contact of organic and wash solution, an appropriate settling time is allowed for separation of the phases. The organic is then decanted to TK-26-1. The present flowsheet does not specify that any organic washing be done in TK-26-1 but the tank can be used for that purpose if necessary. After an appropriate settling time to allow separation of the phases, the organic is pumped to the 1AX Makeup Tank (TK-28-3).

In TK-28-3 the washed organic is butted with 12.2M nitric acid (100 butt) gravity fed from TK-28-3C to obtain the desired acid to salt ratio of the D2EHPA for pH control in the 1A Column. TK-28-3C is flushed with a small volume of water to reduce the residual acid holdup and minimize tank corrosion. The flush water is also added to TK-28-3. Periodically, the aqueous heel in TK-28-3 is jetted to the Low-level Waste Receiver (TK-24-1). The butted organic is pumped to the 1AX Pump Tank (TK-30-3) for reuse in the columns.

The aqueous wash solution from TK-27-3 is jetted to a Waste Receiver for disposal after each contact. Any aqueous heel in TK-26-1 is periodically jetted to a Waste Receiver. (See Section B.2.7 for further routing of both solutions.)

2.6 Strontium Product Concentration and Storage

The strontium product solution (1BP) is pumped on a semi-continuous basis from the 1BP Product Receiver (TK-28-2) to the Cell 5 Concentrator (E-5-2) where it is concentrated. The degree of concentration is limited by the heat removal capacities of the strontium product storage tanks. The concentrator is operated on either a batch basis or an intermittent overflow basis due to the large concentration factor and small concentrated product flow. When the desired concentration is attained during batch operation, the concentrator is shut down and the concentrated solution is cooled before being jetted to the Concentrate Receiver (TK-5-1) for sampling. When the desired concentration is attained during intermittent overflow operation, the diaphragm-operated valve between E-5-2 and TK-5-1 is opened to permit a small batch gravity transfer of solution to TK-5-1 where cooling takes place. This mode of operation reduces thermal shock on the E-5-2 tube bundle due to less frequent cooling. Concentrated strontium product is jetted from TK-5-1 to TK-6-2 or TK-8-1 for segregation into two systems as desired. One system is composed of TK's 6-2, 6-1, 7-1, and 7-2; and the other is composed of TK's 8-1 and 8-2. Transfers are made between the two systems by a jet from TK-7-2 to TK-8-1. Out-of-specification strontium product requiring rework is jetted from TK-5-1 to TK-29-2.

2.7 Waste Handling

2.7.1 Current Acid Waste (PAW and ZAW)

Aqueous wastes generated from PAW and ZAW processing operations are considered to be high-level wastes. These streams are the 1A Column wastes (1AW), 1C Column aqueous rare-earth fraction, and the organic wash wastes from TK-27-3 and TK-26-1 (if necessary).

The 1AW is collected batchwise in the 1AW Receiver Tank (TK-30-2) and jetted to the Waste Receiver (TK-9-1) for interim storage and sampling, if necessary. It is then jetted to the High-level Waste Receiver (TK-25-2) for neutralization and disposal or to the PAW Supernatant Receiver (TK-9-2) for rework through the 1A Column via TK-29-2 and TK-29-3.

The 1C Column aqueous stream is collected batchwise in TK-27-2 and jetted to TK-26-2 for sampling to confirm that it meets disposal specifications. The contents of TK-26-2 are then jetted to the High-level Waste Receiver (TK-25-1) for neutralization or for eventual rework through the 1A Column via TK-29-2.

The organic wash wastes from TK-27-3 are jetted to TK-25-1 for disposal. Wastes from TK-26-1 are jetted to TK-25-2 for disposal.

Degraded organic which is unsuitable for further processing activities is disposed of by burning. Facilities for this operation are in the conceptual stage at the time this section of the manual is being written.

Further handling of waste solutions is discussed in Chapter VIII.

2.7.2 Acid Sludge Waste (PAS)

Aqueous wastes generated from PAS processing operations are low-heating, high-level wastes. These streams are the 1A Column wastes (1AW), 1C Column aqueous rare-earth fraction, and the organic wash waste from TK-27-3. These wastes are all transferred to the Low-level Waste Receiver (TK-24-1) or reworked via appropriate routings.

3. Ion Exchange Procedures

An ion exchange process is used in B-Plant to remove the heat generating radioactive cesium from stored alkaline wastes. The majority of the radioactive cesium is associated with the supernatant liquid waste. The supernatant is passed downflow through a bed of ion exchange material which selectively adsorbs the cesium. Cesium can be removed from both Purex and Redox wastes by an ion exchange process. Technology has been developed for the long term storage of radioactive cesium and radioactive strontium adsorbed on synthetic zeolites in high integrity containers. However, at the time this section of the manual was written, an ion exchange process was used only to remove cesium from stored Purex alkaline supernatant liquid waste. The procedures used to remove the cesium from the waste are discussed below.

3.1 Loading Cycle

Feed for the ion exchange column is pumped to the Cesium Supernatant Receiver (TK-17-2) in the B-Plant from Tank-105-C, a 500,000 gallon Waste Storage Tank in C-Farm used for lag storage. Feed samples are taken from the lag storage tank periodically and analyzed for sodium, cesium, aluminum, and pH. Adjustments are made to the sodium/cesium ratio as required by blending in out-of-specification product material. From TK-17-2, the feed is pumped to the 1XF Pump Tank (TK-18-3) and from there to the top of the 1X Column (T-18-2) for downflow operation. The column will initially contain 1550 gallons (about 8,970 pounds) of a synthetic zeolite ion exchanger, AW-500*, which adsorbs cesium and sodium during the loading cycle. The ion exchange bed is loaded to an instantaneous breakthrough of 7 percent maximum as observed by the radiation monitor in the effluent waste line. Following the loading cycle, demineralized water is added to TK-18-3 and pumped through T-18-2 to remove the residual feed solution from the bed. Both the waste effluent and the wash stream are routed to the 1XW Receiver (TK-18-1).

* Trademark of the Linde Division, Union Carbide Corporation.

3.2 Sodium Removal Cycle

The sodium ion is removed from the zeolite ion exchanger by a 0.2 molar ammonium carbonate scrub solution which is added to TK-18-3 from the 173 header. Seven column volumes of scrub remove greater than 99 percent of the adsorbed sodium. Demineralized water is used to flush the ion exchange bed following the sodium removal cycle. The waste effluent and the wash stream are both routed to TK-18-1.

3.3 Cesium Elution Cycle

The cesium ion is removed by pumping a 3M $(NH_4)_2CO_3$ -2M NH_4OH solution downflow through the bed from TK-18-3. Twelve column volumes of eluent remove greater than 99 percent of the cesium loaded on the bed. During this process, the zeolite exchanger is converted to the ammonium form, readying it for the next loading cycle. From T-18-2, the eluent flows to the 1XP Receiver (TK-19-1).

3.4 Cesium Product Concentration and Eluent Regeneration

The 1XP Receiver (TK-19-1) is also the feed tank for 1XP Concentrator (E-20-2). The dilute cesium product is concentrated to a maximum of 5000 curies of cesium-137 per gallon in the concentrator. The concentrated product is jetted to the 1XP Concentrate Receiver (TK-20-1) from when it is jetted to one of the Cesium Storage Tanks, TK-14-2 or TK-17-1. The overheads from E-20-2 are condensed in the E-20-3 condenser and collected in the Cesium Eluent Storage Tank TK-21-1. The non-condensables from E-20-3 are vented to an ammonium carbonate absorber T-21-2 which is positioned on top of TK-21-1. A small recycle stream is admitted to the top of the adsorber from TK-21-1 to recover additional NH_3 and CO_2 before they are vented to the NH_3 scrubber (T-22-2) situated on top of the condensate Receiver Tank TK-22-1. According to laboratory data, approximately 2 percent of the ammonia and 7.5 percent of the carbon dioxide are lost in this process. To make up for these losses, ammonia and carbon dioxide are sparged into the solution in TK-21-1 from their respective headers. The regenerated eluent is then recycled to TK-18-3 during the cesium elution cycle.

3.5 Recycle of Product

The concentrated cesium product is sampled in TK-20-1 and, if the product does not meet specifications, it can be blended with incoming feed in TK-17-2. The concentrated product can be recycled from TK-17-1 and TK-14-2 to TK-17-2 if the need arises.

3.6 Waste Handling

All waste streamswhich originate within the ion exchange system are collected in TK-18-1. These streams include the loading cycle waste effluent, columnwashes, and the sodium scrub waste. From TK-18-1 the wastes are pumped to the Low-Level Waste Receiver (TK-24-1) and concentrated in

the Low-Level Waste Concentrator (E-23-3). The wastes can also be pumped directly to an ITS unit in the event the low-level waste evaporator is shut down or if TK-24-1 cannot accept additional waste volumes.

3.7 Bed Makeup and Removal

The zeolite ion exchange is hydrated on the third floor AMU area in Tank H-317 and slurried into TK-18-2 by gravity. Due to the exothermic reaction which results when water is added to the zeolite, it is necessary to fill H-317 with water and slowly add the zeolite. In this manner the volume of water is large compared to the volume of zeolite being added and the heat produced is quickly dissipated preventing degradation of the zeolite. The zeolite is removed from TK-18-2 by installing an alternate jumper on the ion exchange column which allows fluidization of the bed when pumping demineralized water from TK-18-3 upflow through the column. Fluidizing the bed facilitates jetting the zeolite to TK-18-1. From TK-18-1 the zeolite water slurry is pumped to an ITS unit via diversion box 241-BX-154.

C. SPECIAL PROCEDURES

1. Solvent Extraction Purification of Strontium

The concentrated strontium product resulting from normal operation of the solvent extraction system may contain amounts of calcium, sodium, rare earths, and Ce-144 in excess of those desired by some future customer. Purification of the product solutions stored in Cells 6, 7 and 8 is accomplished in the solvent extraction system on a campaign basis in conjunction with current acid waste and acid sludge waste processing. The complexant and buffering agent used are different than for the initial separation operations.

1.1 Feed Makeup

Feed for the solvent extraction system is made up in the 1AF Makeup Tank (TK-29-2). Crude strontium solution is jetted from the storage tanks TK-6-1, TK-6-2, TK-7-1, TK-7-2, TK-8-1 and TK-8-2 via appropriate routing to TK-9-2 and then to TK-29-2. The premixed feed butt consisting of the complexing agent [pentasodium diethylenetriaminepentaacetate (Na_5DTPA)] and the buffering agent [acetic acid] is gravity fed to TK-29-2 from TK-29-2A. The pH of the butted feed is initially adjusted with sodium hydroxide from TK-29-2B. Final adjustment is made with sodium hydroxide or nitric acid. When the feed has been adjusted to the desired pH, it is jetted to the 1AF Pump Tank (TK-29-3).

1. 1A and 1S Columns

The 1A (T-30-1) and 1S (T-29-1) Columns form an extraction and scrub system. The feed (1AF) to the 1A Column is pumped from TK-29-3 to the top of the column where it joins with the sodium scrub stream (1SR) from the 1S

Column. The aqueous streams form the dispersed phase and flow down through the organic extractant (1AX) to the bottom disengagement section, where the aqueous-organic interface is located and separation of the phases is effected.

The organic extractant (1AX) is pumped from the 1AX Pump Tank (TK-30-3) to the bottom of the 1A Column. The organic flowing up the column forms the continuous phase. When the column is operated at flowsheet conditions, essentially all of the strontium and calcium are extracted. The organic phase (1AP), now the product-bearing stream, overflows from the upper disengagement section and is gravity fed to the bottom of the 1S Column where it forms the continuous phase.

The aqueous stream (1AW) leaving the 1A Column, bearing the bulk of the cerium, rare earths, and sodium, flows by gravity from the lower disengagement section to the 1AW Receiver Tank (TK-30-2). (See Section C. 1.6 for further routing.)

In the 1S Column, the organic is contacted with an aqueous scrub stream (1SS) for reduction of the sodium concentration. The scrub solution is composed of citric acid for pH control and a small concentration of DTPA complexing agent to remove trace amounts of undesired metallic impurities carried over from the 1A Column. The 1SS butt is pumped from TK-29-1F to an in-line blending tee for mixing with water to provide the desired concentration and flow rate as the 1SS stream to the top of the 1S Column. After passing through the organic-continuous 1S Column the aqueous stream enters the bottom disengagement section where the aqueous-organic interface is located and separation of the phases is effected. The aqueous waste scrub stream (1SR) is then jetted to the upper part of the 1A Column. The organic (1SP) overflows from the top of the column to the 1BF Pump Tank (TK-28-4).

1.3 1B Column

The 1BF Pump Tank (TK-28-4) continuously receives the 1SP (organic overflow from the 1S Column) and pumps it to the bottom feed point of the 1B Column (T-28-1) where it becomes the continuous phase. Strontium is stripped from the organic phase with dilute citric acid (1BX). The 1BX citric acid butt is pumped from TK-28-1F to an in-line blending tee for mixing with water to provide the desired concentration and flow rate to the top of the 1B Column. The interface in the organic-continuous column is located in the bottom disengagement section. The exiting aqueous phase (1BP), bearing about 99 percent of the strontium entering the column, the sodium not removed in the 1S Column, the citrate strip solution, and a trace amount of calcium, flows by gravity to the 1BP Receiver (TK-28-2). The organic stream containing small amounts of calcium and strontium overflows from the top of the column to the 1CF Pump Tank (TK-27-4).

1.4 Solvent Treatment

The 1CF Pump Tank (TK-27-4) continuously receives the organic overflow from the 1B Column and pumps it to the bottom feed point of the 1C Column (TK-27-1) where it becomes the dispersed phase since the 1C Column

is operated aqueous continuous with a top interface. The calcium, strontium, and any rare earths which may be left in the organic are removed by a sodium hydroxide-sodium tartrate wash solution (10X). The 10X butt is gravity fed from an AMU tank to an in-line blending tee for mixing with demineralized water to the desired concentration and flow rate as the 10X stream to the top of the 1C Column where it becomes the continuous phase. The aqueous stream leaving the 1C Column (1CP) flows by gravity from the lower disengagement section to the 1CP Receiver (TK-27-2). The washed organic stream (1CW) overflows from the top of the column to the 1CW Receiver (TK-26-3). It is then transferred via TK-27-3 and TK-26-1 to the 1AX Makeup Tank (TK-28-3) where it is butted with 12.2 M nitric acid (10B), gravity fed from TK-28-3C to obtain the desired acid to salt ratio of the D2EHPA for pH control in the 1A Column. TK-28-3C is flushed with a small volume of water to reduce the residual acid holdup and minimize tank corrosion. The flush water is also added to TK-28-3. Periodically, the aqueous heel in TK-28-3 is jetted to the Low-Level Waste Receiver (TK-24-1). The butted organic is pumped to the 1AX Pump Tank (TK-30-3) for reuse in the columns.

1.5 Strontium Product Concentration

The strontium product (1BP) is pumped on a semi-continuous basis from the 1BP Receiver (TK-28-2) to the Cell 5 concentrator (E-5-2) where it is concentrated. Nitric acid and hydrogen peroxide are added to E-5-2 during concentration to decompose the residual citrate. The peroxide is added to the bottom of the concentrator through the discharge line from the TK-5-2F scale tank. The nitric acid is pumped from the TK-5-2A scale tank. The degree of concentration is limited by the heat removal capacities of the purified strontium product storage tanks. The concentrator is operated on either a batch basis or an intermittent overflow basis depending on conditions existing at the time. When the desired concentration is attained during batch operation, the concentrator is shut down, and the concentrated solution is cooled before being jetted to the Concentrate Receiver (TK-5-1) for sampling. When the desired concentration is attained during intermittent overflow operation, the diaphragm-operated valve between E-5-2 and TK-5-1 is opened to permit a small batch gravity transfer of solution to TK-5-1 where cooling takes place. This mode of operation reduces thermal shock on the E-5-2 tube bundle due to less frequent cooling. Concentrated purified strontium product is jetted from TK-5-1 to a storage tank.

1.6 Waste Handling

The 1A Column aqueous waste stream (1AW) is collected batchwise in the 1AW Receiver (TK-30-2) and jetted to the Waste Receiver (TK-9-1) for interim storage and sampling if necessary. It is then jetted to the High-Level Waste Receiver (TK-25-2) for neutralization and disposal or to the PAW Supernatant Receiver (TK-9-2) for rework through the 1A Column via TK-29-2 and TK-29-3.

The 1C Column aqueous waste stream (1CP) is collected batchwise in the 1CP Receiver (TK-27-2) and jetted to the 1CP Contactor (TK-26-2) for sampling to confirm that it meets disposal specifications. The contents of TK-26-2 are then jetted to the High-Level Waste Receiver (TK-25-1) for disposal.

2. Solvent Extraction Purification of Promethium

During normal waste management processing operations no attempt is made to separate promethium from cerium in the 1C Column. Essentially all of the cerium, promethium and other rare earths are stripped into the 1CP aqueous waste stream and discarded to the High-Level Waste Receiver (TK-25-1). Occasions may arise, however, when it will be necessary to recover a purified promethium product during processing of the Purex acid waste. When a purified promethium product is desired, the separation from cerium is made in the 1C Column. This is accomplished by oxidizing the Ce(III) to Ce(IV) so that cerium-144 is retained in the organic phase while americium and the trivalent lanthanides, including promethium-147, are stripped into the aqueous phase. The aqueous phase is a nitric acid solution containing the strong oxidant, persulfate, plus silver ion as a catalyst. Jumper changes are necessary in Cells 27 and 30 to provide the proper routing for the 1CF stream and to provide an organic scrub stream to the bottom of the 1C Column.

2.1 Promethium-Cerium Separation

The 1CF Pump Tank (TK-27-4) continuously receives the organic overflow from the 1B Column and pumps it to the intermediate feed distributor of the 1C Column where it becomes the dispersed phase since the 1C Column is operated aqueous continuous with a top interface. The aqueous strip streams, nitric acid-persulfate (1CX-1) and nitric acid-silver nitrate (1CX-2) are gravity fed from separate AMU tanks to an in-line blending tee for mixing to the desired concentration and flow rate as the 1CX stream to the top of the 1C Column where it becomes the continuous phase. An organic scrub stream (1CS) is pumped from the 1AX Pump Tank (TK-30-3) to the bottom feed point of the 1C Column to extract cerium from the aqueous phase below the intermediate feed distributor and thus reduce cerium contamination of the promethium product. The aqueous stream leaving the 1C Column (1CP), bearing ~98% of the promethium and ~3% of the cerium entering the column, flows by gravity from the lower disengagement section to the 1CP Receiver (TK-27-2). The cerium-bearing organic stream (1CW) overflows from the top of the column to the 1CW Receiver (TK-26-3).

2.2 Solvent Treatment

The solvent received in TK-26-3 from the 1C Column is pumped batchwise to TK-27-3 where it is contacted with a nitric acid-sodium nitrite strip solution. The sodium nitrite accelerates the reduction of Ce(IV) to Ce(III) and the subsequent transfer of cerium to the aqueous phase. The strip solution is gravity fed to TK-27-3 from AMU TK-H-321 (via the 2707 HDR). After each contact of organic and strip solution, an appropriate settling time is allowed for separation of the phases. The organic is then decanted to TK-26-1 where it is contacted with a sodium hydroxide-sodium tartrate wash solution (1OS) for removal of yttrium and traces of rare earths. The D2EHPA degradation product mono(2-ethylhexyl)phosphoric acid is also removed. After an appropriate settling time to allow separation of the phases, the organic is pumped to the 1AX Makeup Tank (TK-28-3).

In TK-28-3 the washed organic is butted with 12.2M nitric acid (100 butt) gravity fed from TK-28-3C to obtain the desired acid to salt ratio of the D2EHPA for pH control in the 1A Column. TK-28-3C is flushed with a small volume of water to reduce the residual acid holdup and minimize tank corrosion. The flush water is also added to TK-28-3. Periodically, the aqueous heel in TK-28-3 is jetted to the Low-Level Waste Receiver (TK-24-1). The butted organic is pumped to the 1AX Pump Tank (TK-30-3) for reuse in the columns.

The cerium product contained in the TK-27-3 aqueous phase is jetted to the High-Level Waste Receiver (TK-25-1) for neutralization and disposal. The aqueous wash solution in TK-26-1 is jetted to the High-Level Waste Receiver (TK-25-2) for disposal.

2.3 Promethium Product Purification and Concentration

The promethium-bearing aqueous stream (1CP) collected in TK-27-2 is transferred batchwise to the 1CP Contactor (TK-26-2) for removal of the sulfate, silver, and sodium ions resulting from the silver-catalyzed persulfate oxidation of Ce(III) to Ce(IV). Removal of the sulfate is necessary to prevent precipitation of double rare-earth sulfates and to allow concentration of the promethium fraction to volumes small enough for storage. The aqueous solution is butted with sodium hydroxide and sodium tartrate for pH adjustment. The tartrate prevents precipitation of rare earth sulfates when the sodium hydroxide is added. The butted solution is contacted with fresh D2EHPA pumped from TK-M0154 via the 1545 header. After an appropriate settling time for separation of the phases, the aqueous waste is jetted to the High-Level Waste Receiver (TK-25-1) for disposal.

The organic is then stripped with strong nitric acid for recovery of the promethium. After an appropriate settling time for separation of the phases, the stripped organic is pumped to the 1AX Makeup Tank (TK-28-3). The aqueous promethium product stream is transferred to an intermediate storage tank prior to concentration. Storage tank (TK-36-2) was originally scoped for this service as part of a separate project but was not installed as part of Phase III.

A concentrator and concentrated promethium storage tanks in Cells 36 and 37 were also scoped for another project but were not installed for Phase III of the Waste Management Program. Until facilities are provided, concentration of promethium is performed in the Cell 5 concentrator on a campaign basis in conjunction with strontium concentration. The concentration operation is similar to that outlined in Sections B 2.6 and C 1.5 of this manual. The main difference in operation is the addition of sucrose from TK-5-2F to the bottom of E-5-2 during concentration to decompose the nitric acid in the dilute promethium product stream. The concentrated promethium product is collected in the Concentrate Receiver (TK-5-1) for sampling and then jetted to storage (none exists at the time of manual preparation).

D. SOLVENT EXTRACTION STARTUP AND SHUTDOWN PROCEDURES

The preceding sections (B. 2.0 and C.) deal with steady-state operation of the solvent extraction system. This section outlines the solvent extraction system startup and shutdown procedures. Since the process status preceding startup or shutdown may vary widely, the choice of specific procedures is made at the time of startup or shutdown. These procedures are based largely on several years of successful solvent extraction column operating experience at the Strontium Semiworks.

1 Startup Procedures

In order to avoid unnecessary waste losses or an off-standard strontium product stream in establishing steady-state operation, the following sequence is usually followed in startup of the solvent extraction system:

(a) Make up "cold" feed, organic extractant, and aqueous chemical streams.

(b) Establish aqueous seal in each column.

(c) Introduce organic to all columns.

(d) Initiate flow of aqueous chemical streams.

(e) Establish interfaces.

(f) Initiate "cold" feed flow to the columns.

(g) Establish steady-state conditions.

If the columns have not been completely shutdown, all of the above operations may not be necessary to establish column operation.

1.1 Cold Feed Makeup

A synthetic feed having a composition and specific gravity roughly resembling that of the 1AF stream to be processed is prepared in TK-29-2. The synthetic feed which contains sodium nitrate, complexant, buffering agent and tartaric acid is adjusted to the approximate "hot" feed pH. Sufficient synthetic feed is prepared to provide approximately 8 hours of column operation. Processing of the synthetic feed prior to introduction of normal 1AF to the columns assists in establishment of steady-state conditions, evaluation of equipment performance, and minimization of waste losses.

The cold chemical solutions, 1SS Butt, 1BX Butt, and 1CX Butt are also prepared prior to column startup.

1.2 Filling Columns and Establishing Interfaces

The first condition that is established in the columns is the formation of an aqueous seal by adding the appropriate aqueous stream to each column to a predetermined interface level. The purpose of the seal is to prevent trapping of any organic phase (subsequently introduced) in the bottom effluent lines which normally handle the aqueous phase on all columns. Dilute nitric acid or water is added from scale tank TK-30-1-C to establish the interface position on the 1A Column. Water can also be added via the pulser purge line.

Once the seals have been established, the 1AX extractant flow to the 1A Column is started. The organic fills and overflows each column - 1A, 1S, 1B, and 1C - in turn. The desired liquid levels in the intermediate pump tanks, TK-28-4 and TK-27-4, are established and maintained. As each of the 1A, 1S, and 1B Columns is filled with organic extractant and the pulsers are started, the aqueous stream flows are established to move the dispersed phase through the plate perforations and obtain intimate contact between the phases. The 1C Column pulser is started before the organic enters the column. Pulsers are not started until the pulse legs are completely purged of air either by process solution or by water addition to the pulse leg. As the "cold" aqueous streams are started and the rates manually adjusted to the desired initial flow rate, the interfaces are established at the desired location and placed on automatic control. Flow rates of the cold aqueous streams are also put on automatic control. During this initial startup period transfer of the 1SR stream by jet from the 1S Column to the 1A Column is started.

After establishing the organic and cold aqueous stream flows, synthetic feed is introducted to the 1A Column at the desired initial rate, then put on automatic control. Operation with the synthetic feed and cold streams is normally continued for several hours until the columns are operating smoothly and the flowsheet pH conditions are essentially established, especially in the 1A Column.

1.3 Establishment of Flow Rates

The strontium, rare earth and other fission product-bearing 1AF stream is started after all columns are operating smoothly on "cold" streams. The "hot" 1AF stream is gradually blended with the synthetic feed and started to the column. While the columns are reaching steady-state operating conditions, readjustments of the interface controllers are necessary since the specific gravity of the solutions change due to the introduction of the "hot" 1AF. Adjustments to pulser frequency are made at this time also.

Until the 1A, 1S and 1B Columns reach steady-state flowsheet pH conditions, strontium losses to the 1AW or 1CP streams or rare earth and other fission product contamination in the strontium product stream may be excessive. The

use of synthetic feed at startup is designed to minimize off-standard conditions. Provision has been made for reworking off-standard 1AW or strontium product material as indicated in Section F of this chapter. A direct routing for rework of 1CP has not been established at the time of manual preparation.

When steady-state conditions have been established and appropriate flow rate checks have been made, the process stream flow rates are gradually increased to flowsheet levels under automatic control. Pulser frequencies are also increased to the desired values at this time.

1.4 Startup from Equilibrium Shutdown

When the columns are started from an equilibrium shutdown (see Section 2.0), air pressure is removed from the column pulse legs. After a waiting period to allow leakage of air past the pulser pistons, the pulsers are started. This time period was established during functional testing. The 1AX, 1SS, 1BX and 1CX stream flows are then started to establish operating conditions and for establishment of interfaces. The 1AF flow is then started and the rate increased as outlined in Section D. 1.3.

1.5 Startup from Stripping Shutdown

When the columns are started from a stripping shutdown (see Section 2.0), air pressure is removed from the column pulse legs. After a waiting period to allow leakage of air past the pulser piston, the pulsers are started. This time period was established during cold testing. The 1AX, 1SS, 1BX and 1CX stream flows are then started and the column interfaces are established. Synthetic feed is then introducted to the 1A Column at the desired initial rate and put on automatic control. Operation with the synthetic feed and cold streams is normally continued for several hours until the columns are operating smoothly and the flowsheet pH conditions are essentially established, especially in the 1A Column. Introduction of the "hot" 1AF and establishment of flow rates is them completed as outlined in Section D. 1.3.

2 Shutdown Procedures

Column shutdowns are of three types: 1) Equilibrium; 2) Stripping; and 3) Complete. An equilibrium shutdown is made if the downtime is to be of short (16 to 24 hours) duration and the cause of the downtime is not directly associated with any of the columns. Maximum length of downtime of this type is dependent on potential loss of complexant due to decomposition by radiation. A stripping shutdown is made if the downtime is to be of intermediate or long duration due to major repair work or to segregate certain feed campaigns. A complete shutdown is made if the downtime is to be of long duration, if the cause of the downtime is directly associated with any of the columns, or if feed campaigns must be segregated. Process status at the time of shutdown dictates the degree of column stripping and tank cleaning required. Rework of shutdown product and waste streams is covered in Section F of this chapter.

2.1 Equilibrium Shutdown

When the B-Plant columns are placed in an "equilibrium" shutdown condition, all aqueous and organic stream flows, both "hot" and "cold", are stopped. The pulsers also are stopped to maintain as nearly as possible a "status quo" condition within the columns. When the pulsers are stopped, air is introduced to the pulser legs to prevent leakage of process solutions past the pulser piston. Air is not to be introduced while the pulser is operating. It may be necessary to add dilution water through the pulser leg of the 1C Colum to maintain the temperature below 65°C in the bottom disengaging section since self-heating of the aqueous phase may be excessive.

2.2 Stripping Shutdown

When the B-Plant columns are given a "stripping" shutdown, the columns are stripped and left full of the continuous phase. The 1AF, 1BF and 1CF Pump Tanks and the waste and product tanks are emptied. The sequence of events is essentially as follows: Synthetic feed is prepared and added to the 1AF Makeup Tank a few hours prior to shutdown to flush "hot" 1AF from the feed system and the columns. At the completion of synthetic feed processing, the 1AX, 1SS, 1SR, 1BX and 1CX streams are continued for 30 to 60 minutes to complete stripping of the columns. During this time, the 1A column interface is gradually lowered and the interface solids and a small amount of organic are jetted to the 1AW Receiver (TK-30-2). On completing the interface solids removal, the interface level is established. At the completion of the 30-60 minute stripping period, the 1AX, 1SS and 1SR flows are discontinued. The 1BX and 1CX flows are continued until the 1BF and 1CF Pump Tanks (TK-28-4 and TK-27-4) contain minimum pump heels and are then stopped. Pulsing is continued for a period of time to complete phase separation in the columns. When pulsing is discontined, air is introduced to the pulser legs to prevent leakage of process solutions past the pulser piston. Air is not introduced while a pulser is operating. Final interface adjustments are made and the column letdown valves are closed.

At the completion of synthetic feed processing, the aqueous heels in the 1AF Makeup and Pump Tanks (TK-29-2 and TK-29-3) are jetted to waste. The two tanks are then flushed with dilute sodium hydroxide and the flushes are jetted to waste. Heels in the various waste and product tanks are disposed of as necessary to accomplish the purpose of the shutdown.

2.3 Complete Shutdown

When the B-Plant columns are completely shut down, the columns are stripped and emptied together with the intermediate pump tanks. The sequence of events is essentially a reversal of the startup procedure outlined in Section D. 1.0. Sufficient synthetic feed solution is prepared and added to the 1AF Makeup Tank a few hours prior to shutdown to flush "hot" 1AF from the feed system and the columns.

At the completion of synthetic feed processing, the aqueous heels in the 1AF Makeup and Pump Tanks (Tk-29-2 and Tk-29-3) are jetted to waste. The two tanks are then flushed with dilute sodium hydroxide to remove any complexant-rich heels. The flushes are also jetted to waste. When the tanks are empty, dilute nitric acid to be used for displacement of the column organic inventories is added to Tk-29-2 and transferred to Tk-29-3.

Meanwhile, the 1AX, 1SS, 1SR, 1BX and 1CX flows are continued to complete stripping of the columns. At the completion of a 30 - 60 minute stripping period, the 1AX, 1SS and 1SR flows are stopped while the 1BX and 1CX flows are continued. The 1A Column interface is then gradually lowered and the interface solids and a small amount of organic are jetted to the 1AW Receiver (TK-30-2). On completion of the interface solids removal, the interface level is reestablished with dilute nitric acid from TK-29-3 and flow is continued from TK-29-3 to T-30-1 to TK-30-2 for a short period of time to strip the organic in the column. The dilute nitric acid flow is then stopped and the interface is again jetted to TK-30-2 as above.

At the completion of the second interface removal, the 1A Column letdown valve is closed and dilute nitric acid is pumped from TK-29-3 to the 1A Column to displace the organic in the 1A and 1S Columns. When the organic is completely displaced from the 1A and 1S Columns, the aqueous flow is continued to displace the organic from the 1B and 1C Columns. The 1BF and 1CF pumps are operated during this part of the process. The 1BP and 1CP letdown valves are closed during this phase of the operation. The 1BX flow is discontinued when the aqueous overflow to TK-27-4 starts. The 1CX flow is discontinued when aqueous overflow to TK-26-3 starts. When the organic is purged from all of the columns, dilute nitric acid flow is discontinued.

Disposal of the solutions in the columns depends on the status of equipment at the time of shutdown. If the columns are to be emptied, pulser operation is stopped and the columns are emptied to waste tanks. If the columns are to be left full, air pressure is applied to the pulser legs to prevent leakage past the piston. The air pressure required for each column was calculated and checked during functional testing.

E. DETECTION AND REMEDY OF OFF-STANDARD CONDITIONS

Off-standard conditions which may develop during the operation of the solvent extraction system are those processing circumstances which result in excessive strontium waste losses, inadequate decontamination of the strontium product, and inadequate decontamination of the promethium product. The overall plant yield of the strontium and promethium, as defined by the chemical flowsheet, is expected to be better than 95 percent on a sustained operating basis. Tentative specifications for rare earth, other fission product, and impurity content in the strontium and promethium product streams are presented in Chapter I, and more recent specifications are given in Reference 5.

The purpose of this section is to discuss generally the detection and remedy of off-standard conditions occuring in the solvent extraction equipment with particular emphasis being placed on the value of certain instruments as an aid in interpreting abnormal column operation. More meaningful interpretation of the data can be made as experience is gained in operating the processes. Many of the statements made in this section are based on anticipated or theoretical results as determined by the best knowledge at the time of writing. A detailed tabulation of off-standard conditions, their common symptoms, and possible remedies is presented in Tables V-3 and V-4.

1. Methods of Detecting Off-Standard Conditions

1.1 Instruments

Controlled operation of the solvent extraction columns is accomplished by means of six general types of instruments, as follows:

(a) The recording - controlling electronic rotameters which establish the flow rates of the various feed streams to all columns.

(b) The air-purge instruments which record the specific gravity of the solution in the upper disengaging section of the column and the differential pressure across the upper part of the column, including the upper disengaging section and the entire cartridge assembly on the 1A, 1S, 1B, and 1C Columns. On the 1C Column there is an additional purge instrument which records the differential pressure across the lower part of the cartridge assembly.

(c) The gamma energy monitoring instruments which are of two types: 1) gamma spectrometers which incorporate pulse height analyzers for specific energy level detection; and 2) ion chambers which measure gross gamma activity. Probe wells are available to permit continuous monitoring of the lines containing the 1AP, 1AW, 1BP, 1BW, 1CW, and 1CP streams. The gamma spectrometers monitor an individual energy level or scan the energy spectrum between preset levels within the overall range of 0.05 to 2.0 MEV. This flexibility permits the detection of various fission products including rare earths and other emitters of gamma energy within this range.

(d) The electronic float type controllers which establish the interface position on all columns by controlling the effluent aqueous stream flow rates.

(e) The temperature sensing and recording instruments which indicate the temperature in both the top and bottom disengaging sections of all columns.

(f) The pH monitors which measure and record the pH of the 1AF, 1AW, 1BP, and 1CP streams when the samplers at the individual locations are operated.

Under normal operating conditions at a given processing rate, the instrumentation will indicate that almost constant physical and chemical conditions exist in the process. While a single instrument may indicate a trend toward abnormality, it usually takes proper interpretation of the data gathered from several related sources to determine the specific off-standard condition that has developed.

1.2 Samples

Samples obtained at several tank and in-line locations permit analysis of the process solutions by the control laboratory or by the pH monitors noted in Section E 1.1. Analytical data thus obtained provide a valuable means for determination of off-standard conditions. In particular, adequate pH control is essential to efficient operation of the solvent extraction system.

2. Excessive Product Losses

The main product resulting from operation of the solvent extraction system is strontium-90. Promethium-147 can be recovered from the rare earth fraction if the demand arises. Excessive strontium and promethium losses are generally detected by routine sampling, gamma energy monitoring of process streams, or both. Specific gravity and differential pressure instruments do not give positive indications of excesssive losses. (See Section E 3.0 if flooding is involved.)

Process stream gamma monitoring should prove to be a very useful method of determining excessive product losses. However, due to the complex mixtures of nuclides present in many of the solvent extraction system streams, interpretation of the gamma spectrometer data obtained is difficult. Detection of excessive strontium losses is possible only if large amounts of strontium-89 are associated with the beta-emitting strontium-90 by detecting specific gamma energy peaks of the metastable yttrium-89 daughter. Yttrium-89 is present in the 1AW and 1BW streams. Detection of excessive promethium losses in the 1AW, 1BP, and 1CW streams is possible only if large amounts of promethium-148 present in PAW and ZAW are associated with the beta-emitting promethium-147. Detection of europium-154 may be used in estimating promethium losses since the nuclides behave similarly. As experience is gained from the correlation of B-Plant in-line analyses, sophisticated laboratory multichannel gamma analyses techniques, and other laboratory analytical methods, confidence in the in-line monitor data will increase.

Once a loss is confirmed, a check of the controlled flows and operating conditions is usually sufficient to locate the off-standard condition. The most likely cause for excessive losses of strontium is loss of pH control in the 1A and 1B columns. The most likely cause for excessive losses of promethium is loss of pH control in the 1A Column. Pulsing conditions, improper flow ratios, and non-flowsheet stream compositions are also potential causes.

3. Column Flooding

Whenever the holdup of the dispersed phase in a solvent extraction column plate section increases to a value which interferes with free countercurrent phase flow, the conditions for a flood have been established. If the approach to a flooding condition is made gradually, the dispersed phase buildup is localized and, depending on flow conditions, may tend to disperse and reform as a cyclic local flood. Complete flooding caused by aggravation and growth of a local flood is characterized by either the aqueous or the organic phase leaving the column at the end where it entered. Development of a flooding condition within a solvent extraction column, depending on degree, lowers the column's efficiency. As a consequence, increased losses of strontium or promethium, or an increase in impurity content of the respective product streams is apt to result.

In those columns which operate with the organic phase continuous by means of a bottom interface, the differential pressure increases as the aqueous holdup within the column increases. An increased holdup of aqueous phase also tends to lower the interface position which is indicated on the interface recorder-controller. Since the interface instrument controls the rate of aqueous effluent from the column, an increase in aqueous holdup also becomes apparent through a reduction in the flow of the 1AW, 1SR, or 1BP stream.

For the 1C Column, which has a top interface and a continuous aqueous phase, the reverse of the above instrument behavior is generally true. An increase in the organic holdup in the column is reflected by a decrease in differential pressure, rising interface, and increased aqueous 1CP flow.

Generally, a flooded column is returned to normal operation by reducing influent stream rates, the pulse frequency, or both.

4. Emulsion

Excessive emulsification in the plate section of a pulse column may result from the presence of excessive concentrations of emulsion-stabilizing solid impurities such as ferric hydroxide, silica, or zirconium phosphate (from TBP decomposition). Emulsions may also form when the organic phase is contacted with an aqueous phase of low ionic concentration. The 1S Column is particularly susceptible to this latter cause. Emulsification in the plate section is often accompanied by foaming and improper phase

disengagement in the column disengaging section, particularly at the interface end.

Severe emulsification in the column plate section results in partial coalescence of the dispersed phase and may impair decontamination and cause increased and fluctuating strontium losses. The instrument indications and consequences of a severely emulsified condition in a column plate section are similar to those of local flooding. Distinguishing between a flooded and an emulsified condition may require observation and interpretation of equipment performance over a period of several hours, including the taking of special samples. Severe emulsification in a column plate section is usually remedied in the same manner as a flooding condition; that is, by reducing flow rates and/or the pulse frequency. If emulsification occurs in the 1S Column due to third phase formation, the 1AF and 1AX flow rates are reduced while the 1SS stream is continued at full rate to scrub out the third phase. Rates are then gradually increased to the proper ratios. Addition of Mistron to the 1AF was found to be effective in pilot plant studies when the emulsification was caused by solids.

A foaming or emulsified condition in a disengaging section is usually detected by erratic behavior of the interface control system and in the 1C Column by fluctuation of the apparent specific gravity in the top disengaging section. An emulsion in a column disengaging section often has its counterpart in the plate section and is thus often accompanied by column operating instability and malperformance. If the emulsified condition is not alleviated by the remedies mentioned above, or by increasing the TBP concentration of the solvent, a shutdown and flush of the system may be necessary in order to overcome the difficulty. A general consequence of disengaging section emulsification is excessive entrainment of the wrong phase, which may have deleterious effects on the process as discussed below.

5. Excessive Entrainment

During normal column operation some entrainment of aqueous in the organic and vice versa is always occurring. Entrainment of the order of 0.1 to 0.5 percent by volume of the opposite phase may be considered as normal. Phase emulsification in a disengaging section always leads to increased entrainment and, depending on the type of column involved, may produce any of several undesirable results. In the 1A and 1S Columns, entrainment of aqueous in the overflowing organic phase generally is detected by a decline in the decontamination performance of the columns since the aqueous particles are usually associated with metallic impurities. Organic entrainment in the aqueous phase, such as that which could occur in the bottom section of the 1A and 1B Columns, results in solvent loss. In addition, introduction of excessive quantities of solvent to the 1BP concentrator causes a buildup of TBP hydrolysis products in the concentrated solution. Also, prevention of organic-phase entry into the concentrator provides a desirable added safety factor against a possible "red oil" reaction.

6. Poor Product Quality

Poor product quality is defined as inadequate removal of metallic impurities, rare earths, and other fission products from the strontium product stream, and inadequate separation of cerium, strontium, and metallic impurities from the promethium product stream. All of these off-standard conditions can be detected by routine laboratory analyses of process samples. In addition, it should be possible to detect excessive amounts of gamma emitting rare earths and other fission products in the 1BP and 1CP streams by the stream gamma monitors.

Poor decontamination from metallic impurities without coincident column flooding or emulsion may be due to low complexant concentrations in the 1A and 1S Columns. Poor separation of the rare earths and other fission products from strontium in the 1A, 1S, and 1B Columns may be due to improper pH control. Poor separation of cerium from promethium in the 1C Column may be due to inadequate oxidation of the cerium or to an inadequate 1CS flow rate.

F. REWORK OF OFF-STANDARD PROCESS STREAMS

Any required rework of off-standard process streams in B-Plant will normally involve one of the following streams:

(a) The strontium product stream (1BP) - to decontaminate the strontium from excessive metallic impurity, rare earth and other fission product activity.

(b) The 1A Column aqueous waste stream (1AW) - to recover excessive strontium losses.

(c) The 1C Column aqueous stream (1CP) - to recover excessive strontium losses.

(d) The promethium product stream (1CP) when making a cerium-promethium separation - to decontaminate the promethium from excessive cerium and/or strontium activity.

(e) The cesium product stream - to remove excess sodium.

(f) Ion exchange wastes - to recover excessive cesium losses.

Methods available for reworking these off-standard streams are discussed in this section. The decision to rework is arrived at in each individual case on the basis of a number of factors. The effect of off-standard strontium, promethium, or cesium product compositions upon subsequent processing (in the case of product streams) or the value of the strontium, promethium, or cesium recovered by rework (in the case of waste streams), is weighed against the cost of reprocessing in each instance.

1. Off-Standard Strontium Product

Off-standard strontium product can be routed from the 1BP Receiver (TK-28-2) to the 1AF Makeup Tank (TK-29-2) via the Cell 5 Concentrator (E-5-2) and the concentrate Receiver (TK-5-1) for rework through the 1A Column. Stored concentrated strontium product can be transferred to TK-29-2 via TK-9-2 .

2. Off-Standard Promethium Product

Off-standard promethium product can be routed from the 1CP Contactor (TK-26-2) to the 1AF Makeup Tank (TK-29-2) via the High-Level Waste Receiver (TK-25-1). A rework route not initially existing which would eliminate gross contamination of the promethium product would involve transfer of the organic phase from the extraction operation in the 1CP Contactor (TK-26-2) to the 1BF Pump Tank (TK-28-4).

3. Off-Standard Cesium Product

Off-standard cesium product can be routed from the 1XP Concentrate Receiver (TK-20-1) to the Cesium Supernatant Receiver (TK-17-2) via TK-17-1 to be blended with incoming feed for rework. When TK-14-2 and TK-17-1 both contain concentrated cesium product, a jumper change is required to jet the contents of TK-20-1 to TK-17-2.

4. Ion Exchange Wastes

Ion exchange wastes collected in TK-18-1 can be jetted back to TK-17-2 for rework if necessary.

5. Solvent Extraction Wastes

1A Column aqueous wastes (1AW) collected in the Waste Receiver (TK-9-1) can be routed to TK-9-2 for rework through the 1A Column via TK-29-2 and TK-29-3. 1C Column aqueous wastes (1CP) collected in the 1CP Receiver (TK-27-2) and the 1CP Contactor (TK-26-2) can be routed from TK-26-2 to the 1AF Makeup Tank (TK-29-2) via the High-Level Waste Receiver (TK-25-1).

TABLE V-3

DETECTION AND REMEDY OF OFF-STANDARD CONDITIONS

HIGH SOLVENT EXTRACTION WASTE LOSSES

Off-Standard Conditions	How Detected	Likely Cause	Detection of Cause	Remedy
A. High Strontium loss to the 1AW.	(1) By analysis of the aqueous waste in TK-9-1. (2) By analysis of the 1AW Receiver Tank (TK-30-2) sample. (3) By analysis of the 1AW in-line sample.	(1) Flow rates: a) High 1AF (high aq/org flow ratio). b) Low 1AX (high aq/org flow ratio). (2) Stream compositions: a) Low D2EHPA concentration in 1AX. b) Low TBP concentration in 1AX. c) Low complexant concentration in 1AF. d) High strontium concentration in 1AF (3) Low pH: a) Low extraction in 1A column. b) High strontium reflux from 1S column due to low 1SS pH. (4) Flooding: (5) Pulse frequency or amplitude off optimum conditions. a) Frequency. b) Air in pulse leg.	(1) Rates: a) Flow recorder on 1AF b) Flow recorder on 1AX. (2) Stream compositions: a) Instrument specific gravity readings. b) Analysis of samples. (3) Low pH: a) 1AW in-line pH monitor. b) Analysis of samples. (4) Flooding: a) Increase in column differential pressure readings. b) Interface and-or 1AW flow variations. (5) Pulse frequency or amplitude: a) Frequency count. b) Decrease in column differential pressure due to decreased amplitude-frequency product.	(1) Rates: Adjust flows to proper ratios. (2) Stream compositions: a) Butt to specifications; or b) Adjust flow rates to compensate. 1) If low D2EHPA or TBP concentrations exist, raise 1AX rate. 2) If high strontium concentration exists in 1AF, lower 1AF rate or increase 1AX rate. (3) Low PH: a) Butt 1AF or 1SS with sodium hydroxide or buffer. (4) Flooding: (see text) a) Decrease flow rates. b) Adjust frequency. (5) Pulse: a) Adjust frequency. b) Shut down for maintenance of pulser.
B. High rare earth loss to the 1AW. (Cerium contamination of cesium bearing waste)	(1) By analysis of the aqueous waste in TK-9-1. (2) By analysis of the 1AW Receiver Tank (TK-30-2) sample.	(1) See (1) above. (2) Stream compositions: a) Low or high complexant concentration in 1AF. b) High cerium concentration in 1AF. (3) High pH: (4) Flooding: (5) Pulse frequency or amplitude off optimum conditions: a) Frequency. b) Air in pulse leg. (6) Low temperature	(1) See (1) above. (2) Stream compositions: a) Instrument specific gravity readings. b) Analysis of samples. (3) High pH: a) 1AW in-line pH monitor. b) Analysis of samples. (4) Flooding: a) Increase in column differential pressure readings. b) Interface and-or 1AW flow variations. (5) Pulse frequency or amplitude: a) Frequency count. b) Decrease in column differential pressure due to decreased amplitude-frequency product. (6) Low temperature: a) Temperature recorders for 1AF feed tank and 1A column.	(1) See (1) above. (2) Stream compositions: a) Butt to specifications; or b) Reduce 1AF rate or increase 1AX rate if high cerium concentration exists in 1AF. (3) High pH: a) Butt 1AF or 1SS with nitric acid. (4) Flooding: (see text) a) Decrease flow rates. b) Adjust pulse frequency. (5) Pulse: a) Adjust frequency. b) Shut down for maintenance of pulser. (6) Low temperature: a) Increase temperature of 1AF.
C. High promethium loss to 1CW during separation of cerium and promethium.	(1) By analysis of the 1CW sample. (2) By in-line gamma energy analysis of the 1CW stream during PAW or ZAW processing.	(1) Low 1CX nitric acid concentration.	(1) Analysis of 1CX and 1CW samples.	(1) Increase nitric acid concentration of 1CX. (2) Increase 1CX flow rate.

TABLE V-4

DETECTION AND REMEDY OF OFF-STANDARD CONDITIONS

POOR STRONTIUM AND PROMETHIUM PRODUCT QUALITY

Off-Standard Conditions	How Detected	Likely Cause	Detection of Cause	Remedy
A. High fission product (Zr-Nb-95, Ru-106, Cs-137) concentration in 1BP.	(1) By analysis of the 1BP in-line sample. (2) By in-line gamma energy analysis of 1AP and 1BP streams. (3) By analysis of the 1BP stream.	(1) Flow rates: a) High 1AF/1AX flow ratio. b) Low total flow through 1A column. (2) Flooding. (3) High temperature in 1A column.	(1) Rates: a) Flow recorder on 1AF. b) Flow recorder on 1AX. (2) Flooding: a) Instrument specific gravity readings. b) Interface or 1AW flow variations. (3) High temperature: a) Temperature recorder for 1AF pump tank and 1A column.	(1) Rates: Adjust flows to proper ratios. (2) Flooding: (see text) a) Decrease flow rates. b) Adjust pulse frequency. (3) High temperature: a) Decrease temperature of 1AF.
B. High metallic impurity concentration in 1BP	(1) By analysis of the 1BP in-line sample.	(1) Low complexant concentration in 1AF or 1SS. (2) For high sodium: a) High sodium in 1AF or 1AX. b) High pH in 1A or 1S column. c) Low buffer concentration in 1SS. d) High 1SS pH. e) Low 1SS flow. (3) Fow high calcium: a) Low pH in 1B column. (4) Flooding and entrainment from 1A and 1S columns.	(1) Analysis of 1AF or 1SS samples. (2) For high sodium: a) Analysis of 1AF, 1AX, or 1SS samples. b) 1SS flow recorders. (3) For high calcium: a) 1BP in-line pH monitor. b) Analysis of samples. (4) Flooding: a) Increase in column differential pressure readings. b) Interface or 1AW flow variations.	(1) Butt 1AF or 1SS to specifications. (2) Adjust 1AF, 1AX, or 1SS flow rates. (3) Adjust pH of 1BX stream. (4) Flooding: (see text) a) Decrease flow rates. b) Adjust pulse frequency.
C. High rare earth concentration in 1BP.	(1) By analysis of the 1BP in-line sample. (2) By in-line gamma energy analysis of the 1BP stream.	(1) Low pH in 1B column. (2) High 1BX flow rate. (3) Flooding.	(1) Low pH: a) 1BP in-line pH monitor. b) Analysis of samples. (2) Flow recorders on 1BX chemical and water addition. (3) Flooding: a) Increase in column differential pressure readings. b) Interface and-or 1BP flow variations.	(1) Low pH: a) Butt 1BX with sodium hydroxide. (2) Reduce 1BX flow rate. (3) Flooding: (see text) a) Decrease flor rates. b) Adjust pulse frequency.
D. High strontium loss to the 1BW and high strontium contamination of promethium product (1CP).	(1) By analysis of the 1CP in-line sample. (2) By in-line gamma energy analysis of the 1BW and 1CP streams.	(1) High pH in 1B column. (2) High sodium in 1B column caused by low buffer concentration in 1SS, low 1SS flow, or high sodium in 1AF or 1AX. (3) Low acid content in 1B column when high sodium content exists. (4) Low acid content of 1BX. (5) Low 1BX acid flow. (6) High 1AF strontium concentration. (7) High 1AF/1AX flow ratio.	(1) High pH: a) 1BP in-line pH monitor. b) Analysis of 1BP samples. (2) Analysis of 1AF, 1AX, 1SS, or 1BP samples. (3) Analysis of 1BX samples. (4) Flow recorder on 1BX chemical addition. (5) Rates: a) Flow recorder on 1AF. b) Flow recorder on 1AX.	(1) Butt 1SS with buffer. (2) Increase nitric acid concentration in 1BX. (3) Increase 1BX flow. (4) Reduce 1AF flow or adjust 1AF and 1AX flows to the proper ratio.
E. High cerium concentration in promethium product during separation of cerium and promethium.	(1) By analysis of the 1CP sample from TK-26-2. (2) By in-line gamma energy analysis of the 1CP stream.	(1) Inadequate oxidation of Ce(III) to Ce(IV): a) Low persulfate concentration. b) High silver concentration. (2) Low 1CS flow rate. (3) High 1CX flow rate. (4) Low 1CF flow rate. (5) Improper 1CS/1CF flow ratio.	(1) Analysis of persulfate and silver nitrate solutions. (2) 1CS flow recorder. (3) 1CX flow recorder. (4) 1CF flow recorder.	(1) Butt 1CX solution with persulfate or silver nitrate. (2) Increase 1CS flow rate. (3) Adjust 1CX flor rate. (4) Adjust 1CF flow rate.
F. High metallic impurity concentration in promethium product. (Ca, Fe, Al)	(1) By analysis of the 1CP in-line sample. (2) By analysis of the 1CP sample from TK-26-2.	(1) High iron, aluminum, or calcium in 1AF. (2) Low complexant in 1AF or 1SS. (3) High 1CX nitric acid concentration. (4) High 1CX flow rate.	(1) Analysis of 1AF and 1SS samples. (2) Analysis of 1CX samples. (3) 1CX flow recorder.	(1) Decrease 1AF flow rate. (2). Butt 1AF or 1SS streams with complexant. (3) Adjust 1CX nitric acid content. (4) Adjust 1CX flow rate.

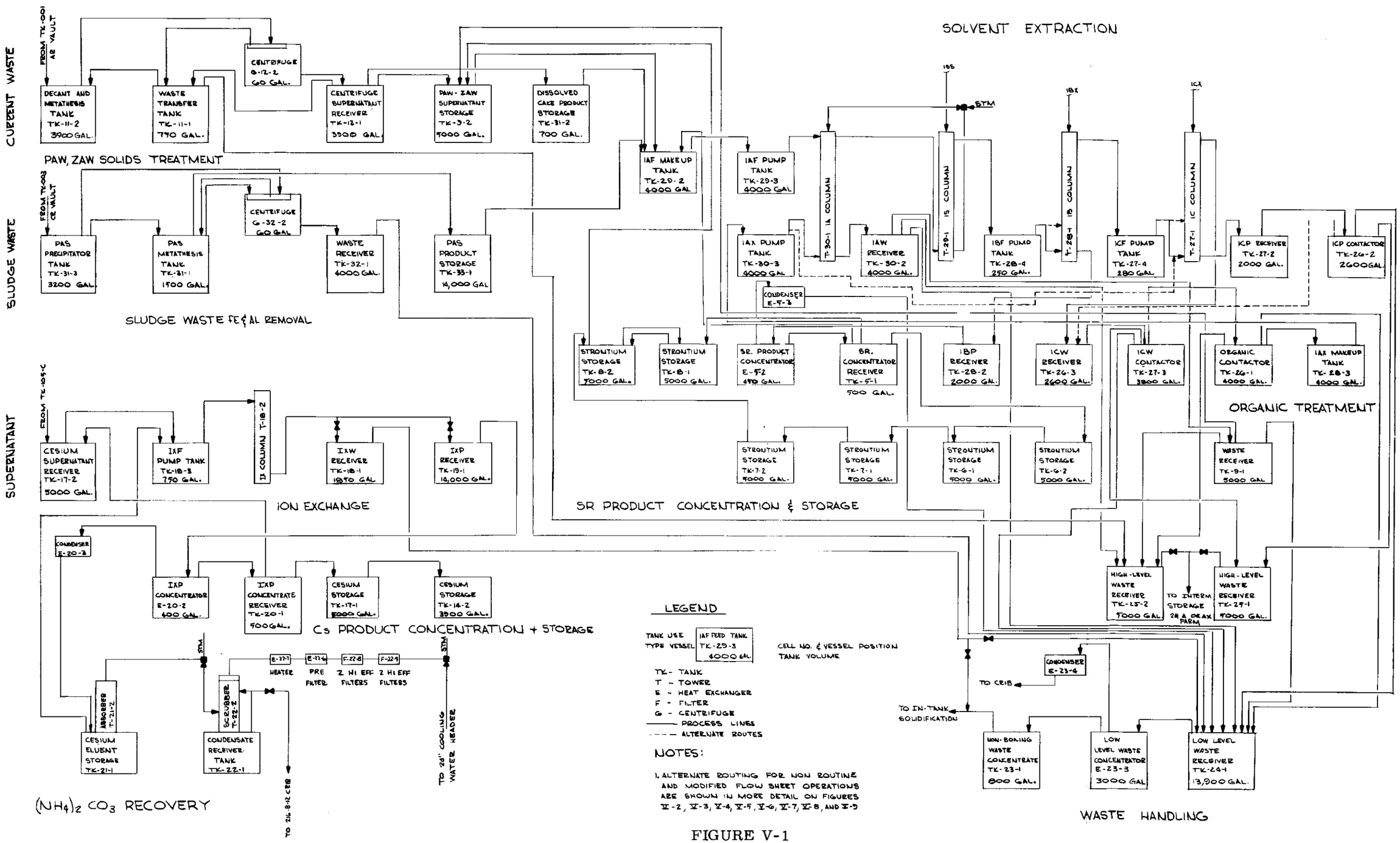

FIGURE V-1

Basic Flowsketch of Waste Management Processes

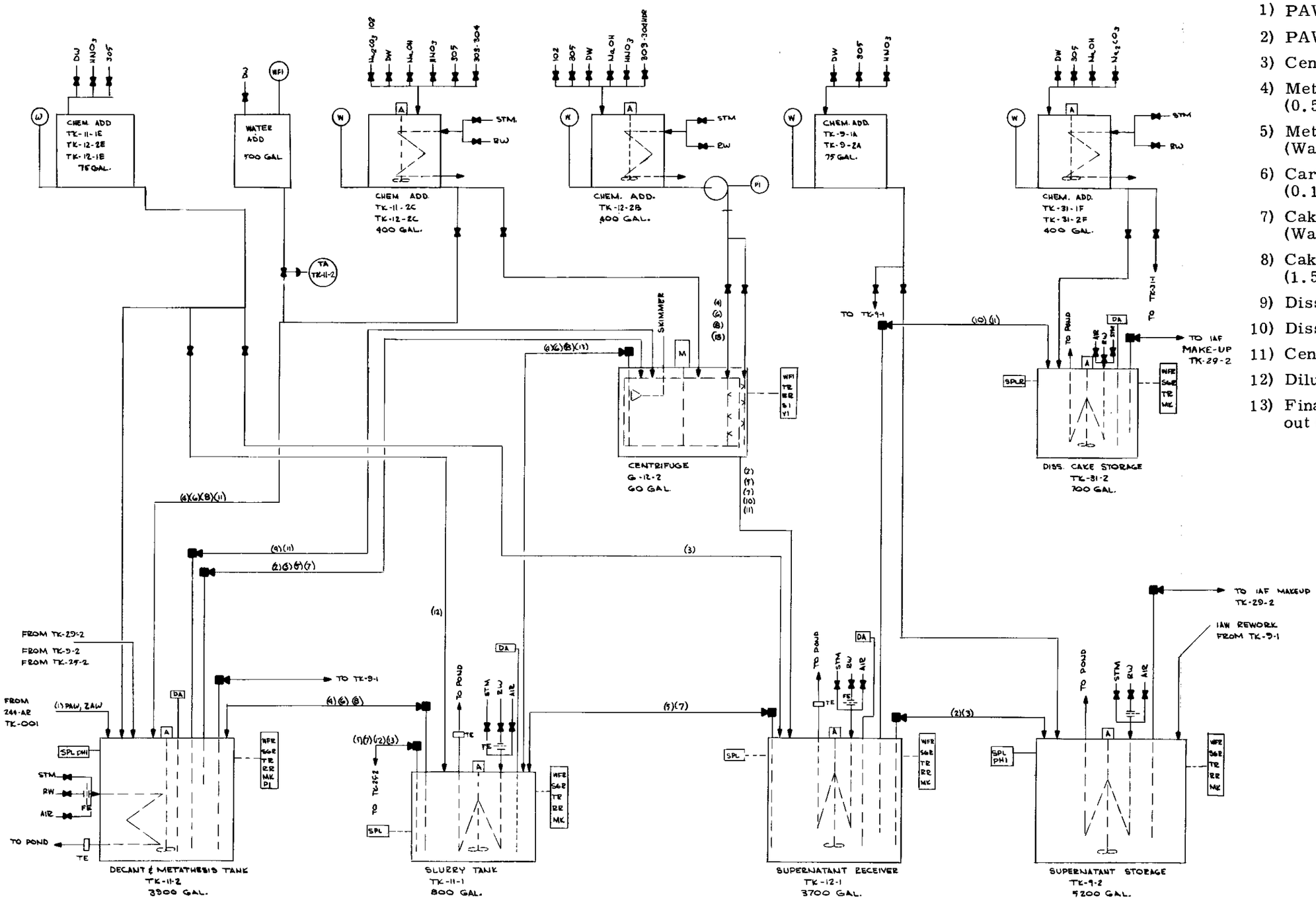

1) PAW or ZAW from 244-AR.
2) PAW or ZAW Supernatant.
3) Centrifuge Flush (DW).
4) Metathesis Solution. (0.5M NaOH, 1M Na_2CO_3)
5) Metathesis Supernatant (Waste)
6) Carbonate Cake Wash (0.1M Na_2CO_3)
7) Cake Wash Supernatant (Waste)
8) Cake Dissolvent (1.5M HNO_3)
9) Dissolved Cake Slurry
10) Dissolved Cake Supernatant
11) Centrifuge Flush (DW)
12) Dilution Water
13) Final Centrifuge Clean-out (DW)

FIGURE V-2

Feed Preparation - Current Acid Waste

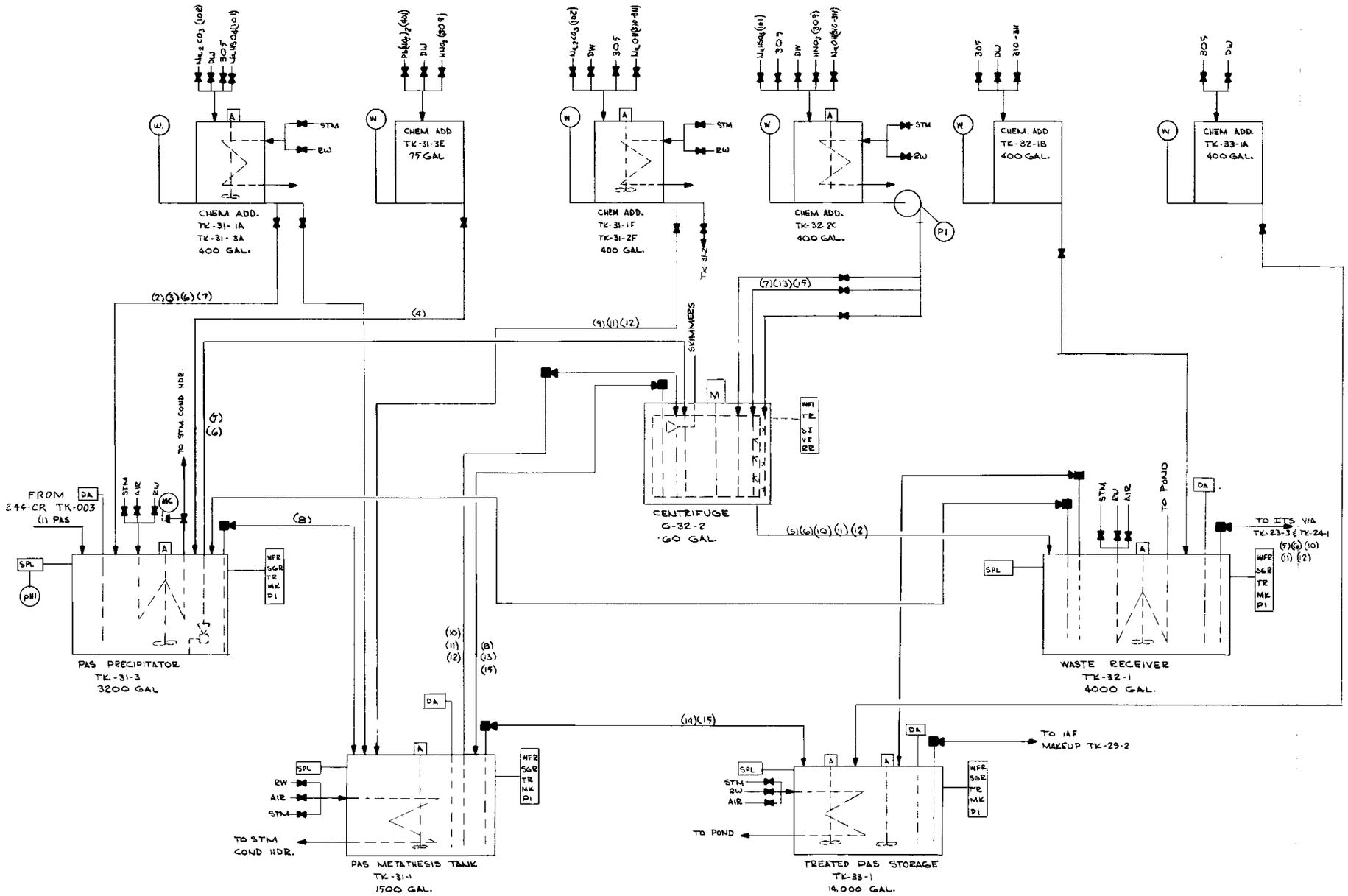

SULFATE PRECIPITATION

1) PAS from 244-CR
2) Bisulfate Butt (6M $NaHSO_4$)
3) pH Adjustment (1.8M Na_2CO_3)
4) Lead Nitrate Add (1M $Pb(NO_3)_2$)
5) Precipitation Supernatant (The following steps are performed after every third sulfate strike)
6) Cake Wash (DW)
7) Slurry Water (DW)
8) Cake Slurry

CARBONATE METATHESIS (Performed after every third sulfate strike)

9) Metathesis Solution Add (5M NaOH, 0.5M Na_2CO_3)
10) Metathesis Supernatant (Waste)
11) 12) Cake Washes (0.1M Na_2CO_3)
13) Cake Dissolvent (1.2M HNO_3)
14) Dissolved Cake
15) Water Flush (DW)

FIGURE V-3

Feed Preparation - Acid Sludge Waste

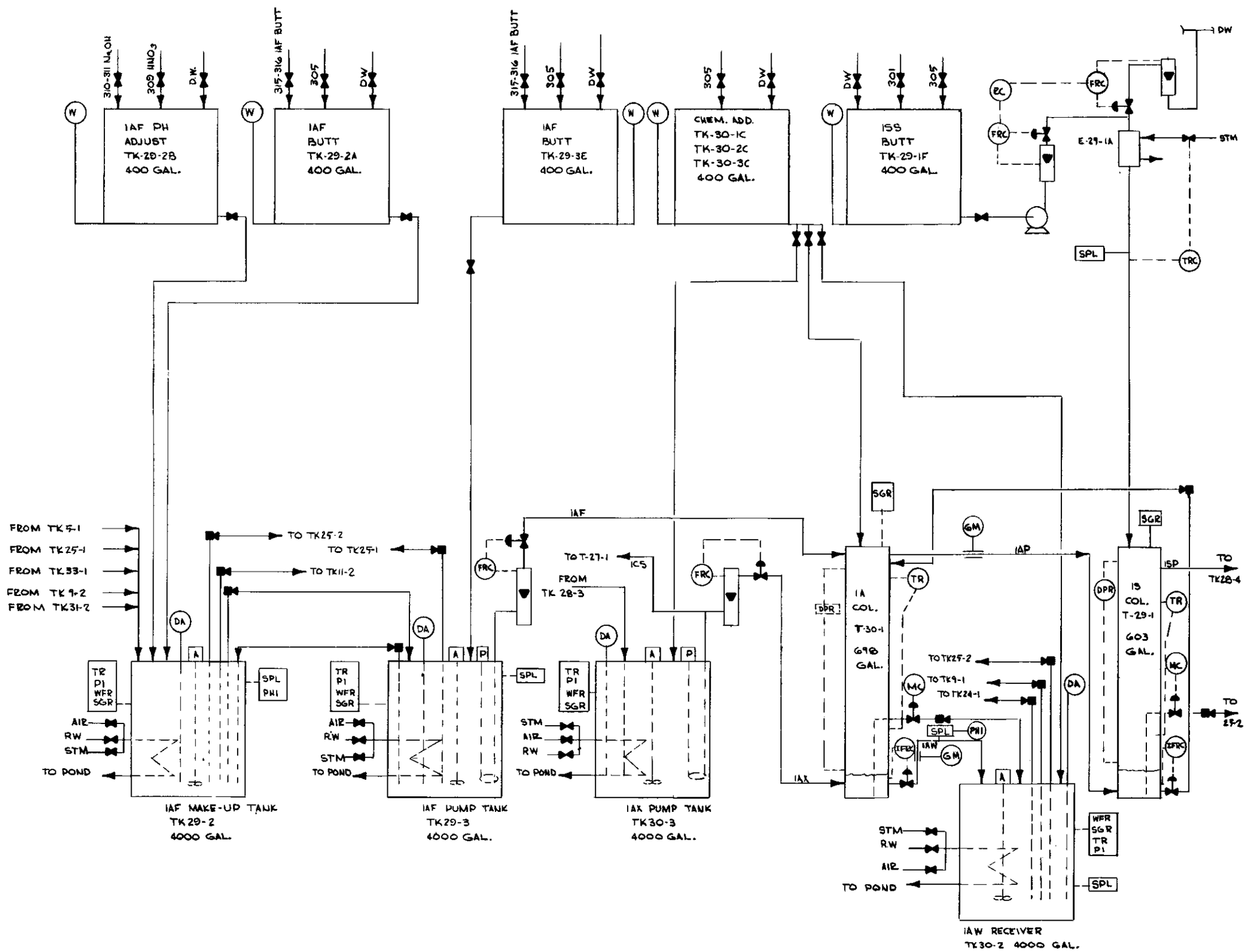

FIGURE V-4

Extraction - 1A and 1S Columns

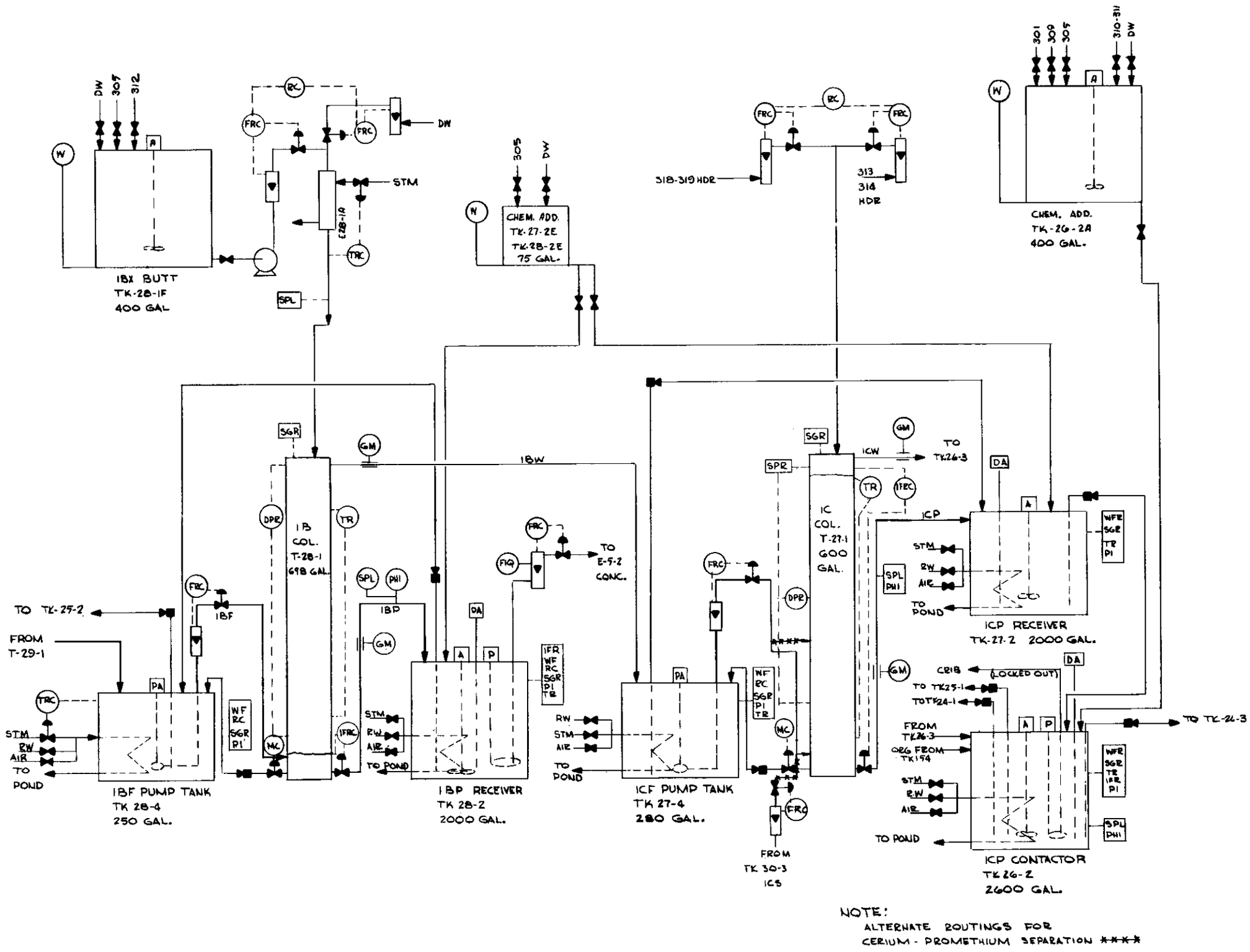

FIGURE V-5

Partition and Strip - 1B and 1C Columns

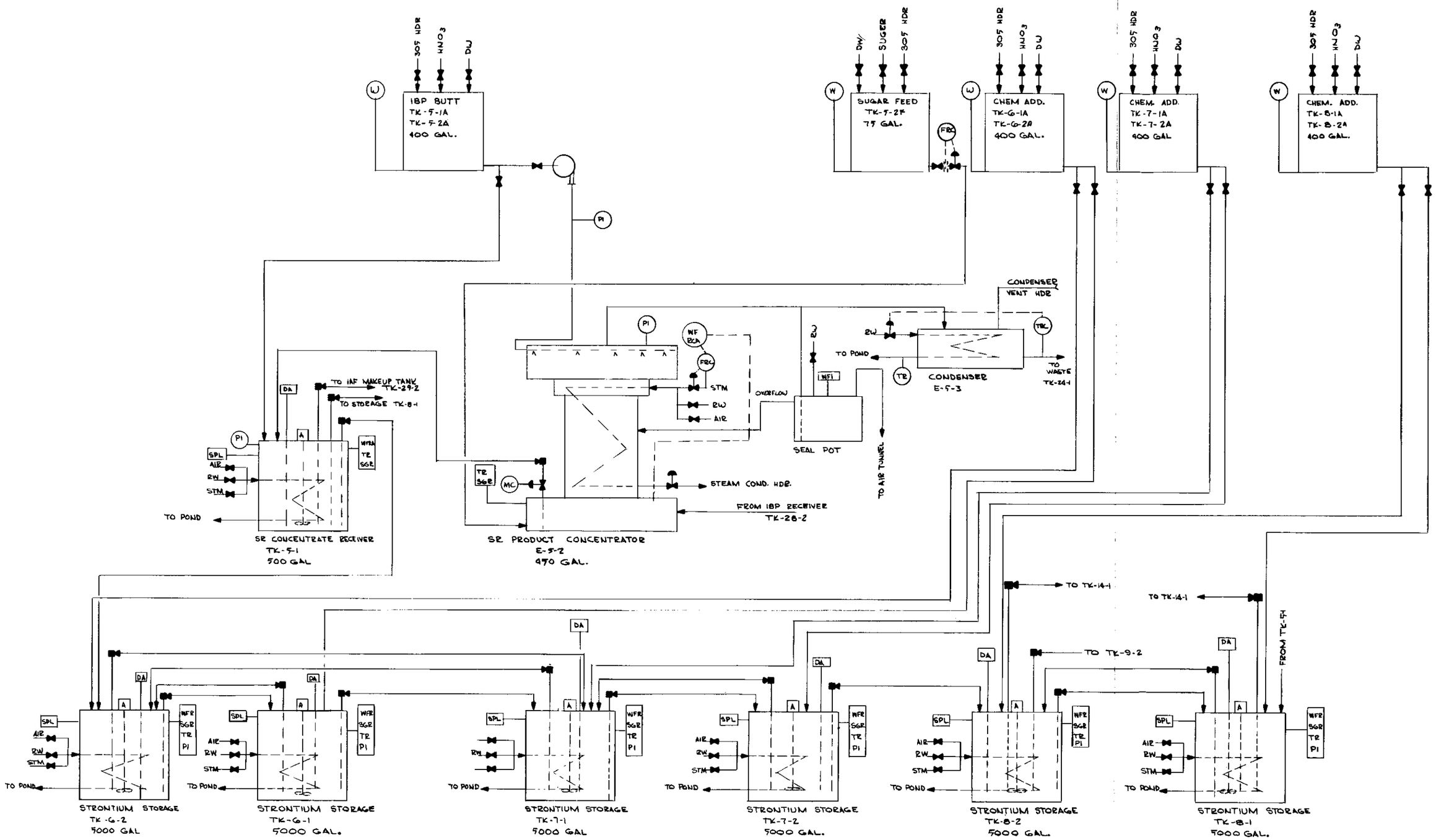

FIGURE V-6

Strontium Product Concentration and Storage

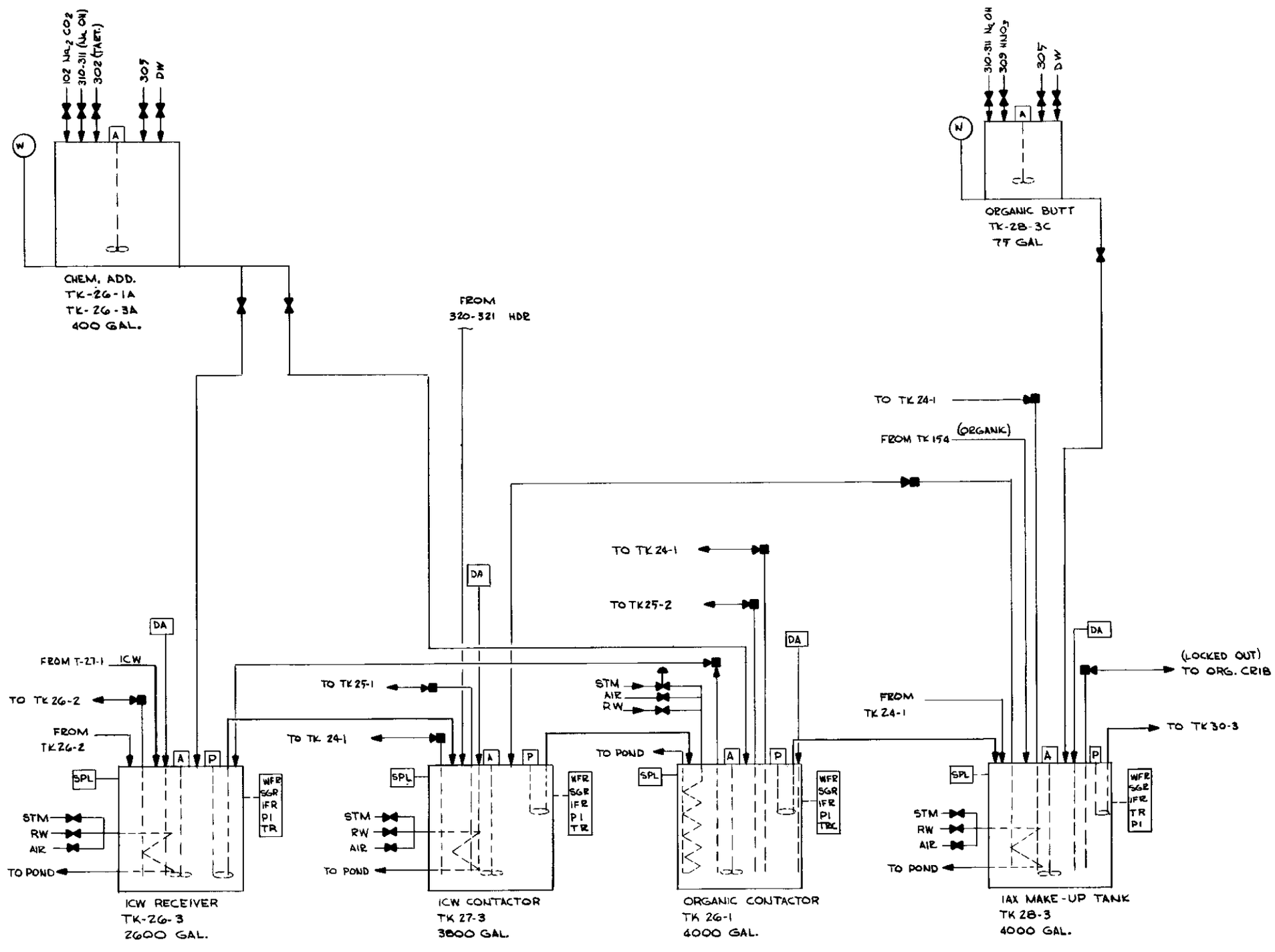

FIGURE V-7

Organic Treatment

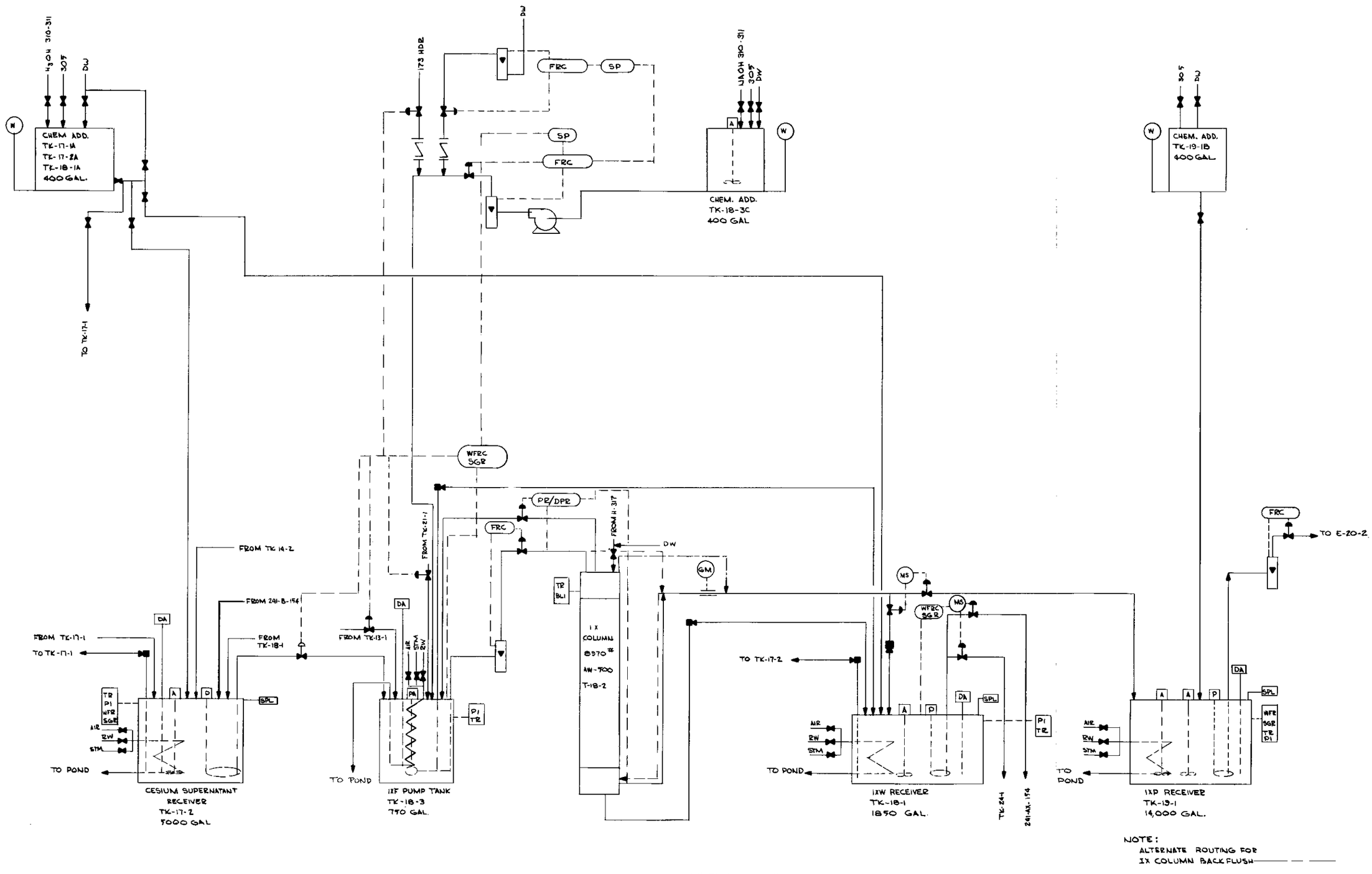

FIGURE V-8

Cesium Ion Exchange

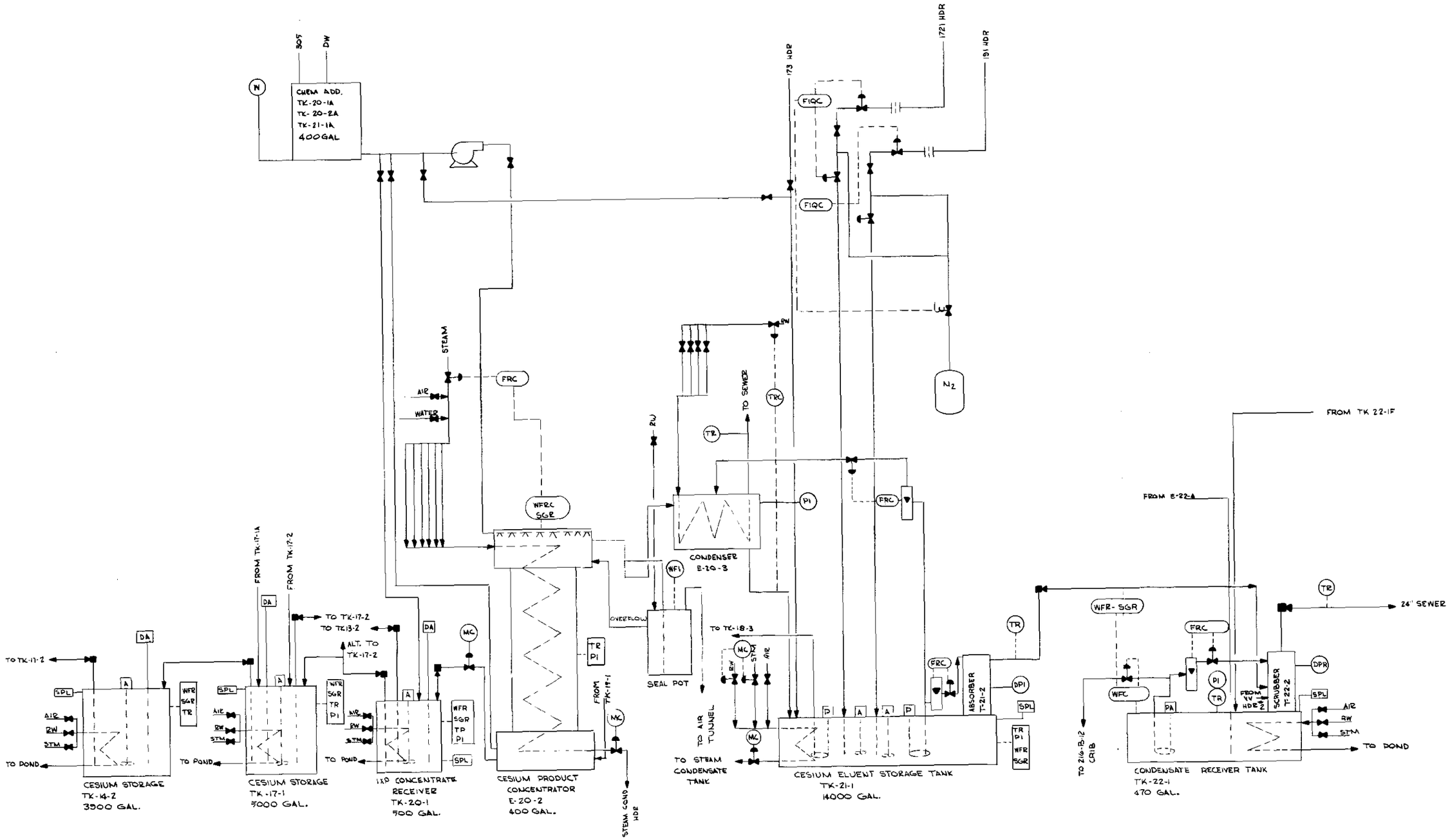

FIGURE V-9

Cesium Product Concentration and Storage

TABLE V-5
LEGEND AND NOTES USED IN FIGURES

A - Agitator
BLI - Bed Level Indicator
CV - Condenser Vent
DPR - Differential Pressure Recorder
DA - Dilution Air
DW - Demineralized Water
FIQ - Flow Indicator Integrator
FRC - Flow Recorder Controller
FRQ - Flow Recorder Integrator
IFRC - Interface Recorder Controller
LLI - Liquid Level Indicator
M - Electric Motor
P - Pump
PA - Pressure Alarm
PI - Pressure Indicator
pHI - pH Indicator
RC - Ratio Controller
RR - Radiation Recorder
RW - Raw Water
SGR - Specific Gravity Recorder
SGRC - Specific Gravity Recorder Controller
SI - Speed Indicator
SPL - Sampler
SPR - Static Pressure Recorder
STM - Steam
T - Trap
TI - Temperature Indicator
TIC - Temperature Indicator Controller
TR - Temperature Recorder
TRC - Temperature Recorder Controller
VI - Vibration Indicator
WFI - Weight Factor Indicator
WFR - Weight Factor Recorder
WFRC - Weight Factor Recorder Controller
WFRCA - Weight Factor Recorder Controller Alarm

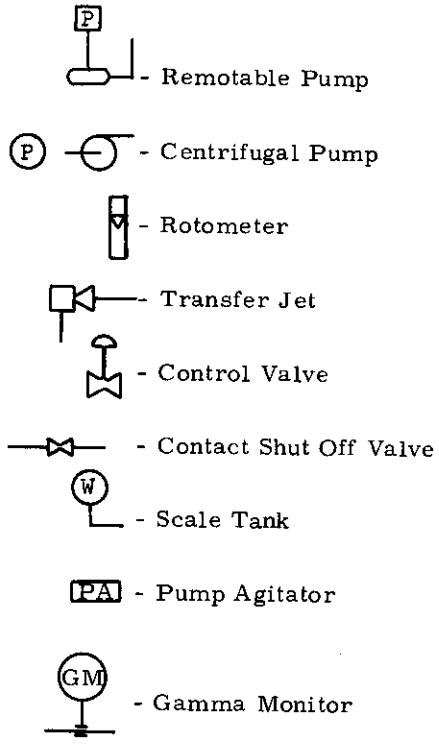

Notes:

1. Normal maximum working volume is approximately 80% of the listed volume.

PART III, Continued

PROCESS

CHAPTER VI

AQUEOUS AND ORGANIC MAKE-UP

By

J. S. Buckingham

CHAPTER VI

AQUEOUS AND ORGANIC MAKE-UP

CONTENTS

	Page
A. INTRODUCTION	602
B. VOLUME AND COMPOSITION OF AQUEOUS AND ORGANIC STREAMS	603
1. Current Acid Waste	603
1.1 Purex Acid Waste, PAW	603
1.2 Zirflex Acid Waste, ZAW	603
2. Acidified Sludge Waste	603
3. Strontium Purification	606
4. Stored Supernatant Waste	606
C. ESSENTIAL MATERIALS: REQUIREMENTS AND SPECIFICATIONS	606
1. Current Acid Waste	611
2. Acidified Sludge Waste	612
3. Stored Supernatant Waste	613
4. Strontium Purification	613
4.1 Strontium Recovered from Current Waste	613
4.2 Strontium Recovered from Stored Waste	614
D. SOURCE AND STORAGE OF PROCESS CHEMICALS	614
E. MAKE-UP AND DISTRIBUTION OF COLD PROCESS STREAMS	618
1. Stock Chemicals and Solutions	618
2. Leaching of Solids in Current Acid Wastes	620
3. Iron and Aluminum Removal Precipitation Process	622
4. Solvent Extraction Feed Make-up	624
5. Solvent Extraction Processes	626
5.1 PAW, ZAW, and PAS	626
5.2 Strontium Purification	629
6. Solvent Treatment	631
7. Ion Exchange Process for the Recovery of Cesium	631
8. Waste Treatment	634
REFERENCES	635
LIST OF TABLES AND FIGURES	636
APPENDIX A	637
APPENDIX B	640

CHAPTER VI

AQUEOUS AND ORGANIC MAKE-UP

A. INTRODUCTION

The concurrent processing of Purex Acid Waste (PAW and ZAW), acidified sludge waste (PAS and RAS), and stored supernatant liquid wastes (PSN, RSN, PSS, and RSS) in the Waste Fractionization Plant utilizes precipitation, solvent extraction and ion exchange processes. Current wastes and sludge wastes are processed through solvent extraction equipment on a campaign basis. Twice as much time is allowed for processing current waste as is allowed for processing sludge waste. Once or twice a year the solvent extraction equipment may be used to further purify the strontium inventory as feed material for the fission product program. Based on a 72 per cent operating efficiency, the solvent extraction equipment is used approximately 155 days a year for current waste (30 days for Zirflex waste and 125 days for normal and enriched uranium waste), 78 days a year for sludge waste, and 15 days a year for strontium purification.

The precipitation process is used to prepare feed material for the solvent extraction process by removing a large portion of the iron, aluminum, and magnesium from sludge waste. Crude feed material prepared from sludge waste for the solvent extraction process is accumulated and stored in a 12,000 gallon tank located in Cell 33. The precipitation process operates independently of the solvent extraction process; therefore, based on a 72 per cent operating efficiency, it is operated approximately 260 days a year.

The ion exchange process is used to recover cesium from stored supernatant waste. The ion exchange process operates independently of the precipitation and the solvent extraction processes, and if operated 260 days a year, could accomplish 200 ion exchange cycles.

Depending on which type of feed is being processed, between 40,000 and 80,000 gallons of aqueous chemical solution and between 10,000 and 15,000 gallons of organic chemical solutions per day will be required. The make-up of these chemical solutions will involve using 23 different chemicals, including process water and inorganic ion exchangers in 36 different solutions.

In order to meet potentially usable fission product isotopic specification, impurity limits are placed on the essential materials used in chemical processing and on the uranium metal used for reactor fuel. Limits on alkaline earth elements are needed because these elements are common contaminates in the essential materials and adversely affect strontium product quality. Cesium and cerium are uncommon contaminants; however, the amounts of these elements added with the essential materials must be limited to prevent isotopic dilution of recovered fission products.

The volume and composition of the "cold" process streams needed for processing the waste solutions in the Waste Fractionization Plant are discussed in Part B of this chapter. The essential materials required to make up the cold process streams are discussed in Part C. Part D discusses the source and storage of process chemicals, while the make-up and distribution of the various process streams are discussed in Part E.

B. VOLUME AND COMPOSITION OF AQUEOUS AND ORGANIC STREAMS

1. Current Acid Waste

1.1 PAW

Based on processing 3200 gallons of PAW a day (7000 gallons of IAF), operation of the Waste Fractionization Plant (B-Plant) requires the input of 22 process streams exclusive of the feed material. These "cold" process streams consist of 19 different compositions requiring 13 different chemicals. The total volume of the solutions comes to over 22,000 gallons a day. Approximately 98 per cent of the organic extractant is recycled. Freshly prepared solvent is added periodically to maintain the desired in-plant solvent inventory. The composition and the daily volume requirements for the process streams used for processing PAW are shown in Table VI-1. The volumes and compositions are based on the conceptual flowsheets presented in Chapter IV, Figures IV-1, IV-48, IV-55, and IV-58.

1.2 ZAW

Waste generated by processing zirconium-jacketed fuel elements (Zirflex Processing) are processed in B Plant in a manner similar to that used for processing PAW. The major processing differences between the two types of waste are in the solvent extraction flowsheet as shown in Figure IV-49. Based on processing 2900 gallons of ZAW a day (7800 gallons of IAF), operation of B Plant requires the input of 22 "cold" process streams. As with PAW, the cold process streams consist of 19 different compositions requiring 13 different chemicals, but in proportions different from that required for PAW processing. The total volume of solutions comes to over 26,000 gallons; however, 98 per cent of the organic extractant is recycled. The composition and daily requirements for the cold process streams used for processing ZAW are shown in Table VI-2. These compositions and volumes are based on the conceptual flowsheets presented in Chapter IV.

2. Acidified Sludge Waste

Based on the processing of 4800 gallons of acidified sludge waste (PAS) per day through the sulfate precipitation step to remove iron and aluminum and the processing of 4000 gallons per day of solvent extraction feed (IAF) prepared from sludge waste, operation of the Waste Fractionization Plant requires the input of 20 "cold" process streams. These process streams are of 19 different compositions requiring 14 different chemicals. Approximately 8000 gallons of solution per day are required for the iron and aluminum removal step (sulfate precipitation

TABLE VI-1

AQUEOUS AND ORGANIC PROCESS STREAMS FOR PROCESSING CURRENT WASTE

Basis: 1600 gal. PAW/batch
3200 gal. PAW/day (2 batches/day)
7000 gal. 1AF/day

Function	Stream Designation	Stream Composition	Gal. Batch	Gal. sol'n. per day	SpGr
Solids Leaching	Water leach	H_2O	435	870	1.00
	Acid leach	4M HNO_3	320	640	1.13
	QT leach	1.5M NaOH, 0.1M tartrate	480	960	1.06
	Cake removal	6M NaOH	150	300	1.22
Feed Butt	Buffer butt	11.5M HAcOH (hydroxyacetic acid)	60	120	1.23
	Chelate butt	1.57M Na_3HEDTA	550	1100	1.32
	Tartrate butt	4M tartaric acid	10	20	1.26
	pH adjust	19M NaOH	5	10	1.53
Extractant	1AX	0.3M D2EHPA, 0.2M TBP, hydrocarbon diluent		7000 (140)*	0.80
Scrub	1SS butt	2.5M HAcOH, 0.1M NaOH, 0.02M Na_3HEDTA, pH 1.8		340	1.02
	1SS dilution water	H_2O		1100	1.00
Strontium Strip	1BX butt	1M HNO_3		30	1.03
	1BX dilution water	H_2O		1400	1.00
Cerium-Rare Earth Separation	1CX-1	2M HNO_3, 0.53 M $Na_2S_2O_8$		530	1.09
	1CX-2	2M HNO_3, 0.02M $AgNO_3$		200	1.07
	1CS	0.3M D2EHPA, 0.2M TBP, hydrocarbon diluent		1400 (30)*	0.80
Cerium Strip	Ce strip(a)	2.1M HNO_3	1224	1400	1.07
	Ce strip(b)	3.0M $NaNO_2$	20	80	1.12
Organic Wash	1OS	2.5M NaOH, 0.1M citrate	428	1700	1.10
Organic Butt	1OO butt	12.2M HNO_3	37	150	1.35
Sulfate Removal	pH adjust	3.6M NaOH, 0.12M HAcOH	243	460	1.15
	Extractant	0.3M D2EHPA, 0.2M TBP, hydrocarbon diluent	850 (17)*	1600 (32)*	0.80
	RE strip	1M HNO_3	600	1100	1.03
	Acid kill	1.4M sugar	22	40	1.18

* Approximately 98 percent of the organic extractant is recycled. The number in parenthesis represents the 2 percent of new extractant needed to replace that lost during processing.

DECLASSIFIED

TABLE VI-2

AQUEOUS AND ORGANIC PROCESS STREAMS FOR PROCESSING ZIRFLEX ACID WASTE

Basis: 1200 gal. ZAW/batch
2900 gal. ZAW/day
7800 gal. 1AF/day

Function	Stream Designation	Stream Composition	Gal. Batch	Gal. sol'n. per day	SpGr
Solids Leaching	Water leach	H_2O	325	790	1.00
	Acid leach	4M HNO_3	320	770	1.13
	QT leach	1.5M NaOH, 0.1M tartrate	360	870	1.06
	Cake removal	6M NaOH	110	270	1.22
Feed Butt	Buffer butt	11.5M HAcOH (hydroxyacetic acid)	56	140	1.23
	Chelate butt	1.57M Na_3HEDTA	1032	2500	1.32
	Tartrate butt	4M tartaric acid	11	27	1.26
	pH adjust	12.2M HNO_3	16	39	1.35
Extractant	1AX	0.3M D2EHPA, 0.2M TBP, hydrocarbon diluent		7800 (160)*	0.80
Scrub	1SS butt	2.5M HAcOH, 0.1M NaOH 0.02M Na_3HEDTA, pH 1.8		380	1.02
	1SS dilution water	H_2O		1200	1.00
Strontium Strip	1BX butt	1M HNO_3		30	1.03
	1BX dilution water	H_2O		1500	1.00
Cerium-Rare Earth Separation	1CX-1	2M HNO_3, 0.53M $Na_2S_2O_8$		590	1.09
	1CX-2	2M HNO_3, 0.02M $AgNO_3$		200	1.07
	1CS	0.3M D2EHPA, 0.2M TBP, hydrocarbon diluent		1600 (32)*	0.80
Cerium Strip	Ce strip(a)	2.1M HNO_3	1224	1800	1.07
	Ce strip(b)	3.0M $NaNO_2$	20	87	1.12
Organic Wash	1OS	2.5M NaOH, 0.1M citrate	428	1900	1.10
Organic Butt	1OO butt	12.2M HNO_3	37	160	1.35
Sulfate Removal	pH adjust	3.6M NaOH, 0.12M HAcOH	243	530	1.15
	Extractant	0.3M D2EHPA, 0.2M TBP, hydrocarbon diluent	850 (17)*	1900 (38)*	0.80
	RE strip	1M HNO_3	600	1300	1.03
	Acid kill	1.4M sugar	22	50	1.18

* Approximately 98 percent of the organic extractant is recycled. The number in parenthesis represents the 2 percent of new extractant needed to replace that lost during processing.

DECLASSIFIED

[redacted]

and carbonate-hydroxide metathesis) and 34,000 gallons of solution per day are required for the solvent extraction process. As mentioned earlier, the iron and aluminum removal step operates independently of the solvent extraction process for approximately 260 days a year. The solvent extraction process operates approximately 80 days a year processing sludge waste. As is the case with current acid waste, approximately 98 per cent of the organic solvent is recycled. Compositions and daily volume requirements for the "cold" process streams used for processing sludge waste are shown in Table VI-3. These compositions and volumes are based on the conceptual flowsheets presented in Chapter IV, Figures IV-3, IV-50, and IV-58.

3. Strontium Purification

Once or twice a year, crude strontium recovered from current and sludge waste may be purified by a solvent extraction process to prepare feed material for the fission product program. The same solvent extraction equipment that is used to recover strontium and rare earths from current and sludge waste is used to purify the crude strontium. Flowsheets for the purification of strontium are based on the amount of impurities, particularly calcium, present in the crude strontium. Flow ratios, and consequently the required volumes of process streams, vary somewhat for different batches of crude strontium. The volumes and compositions of the process streams needed to purify crude strontium recovered from current and sludge waste are shown in Table VI-4. The flowsheets are based on strontium to calcium ratios of 4.8 for crude strontium recovered from current waste, and 1.0 for crude strontium recovered from sludge waste. As in other solvent extraction processes, approximately 98 per cent of the organic solvent is recycled.

4. Stored Supernatant Waste

Because stored supernatant waste is processed batchwise in an ion exchange process, the chemical requirements stated in Table VI-5 are on a per cycle or per batch basis. The per day requirements can be determined by multiplying the per cycle requirements by 24/31 (assuming 31 hours per cycle). Operation of the cesium recovery ion exchange process will require the input of five process streams including process water and ion exchange medium for bed make-up. However, ion exchange medium will be added only when the performance of the ion exchange column indicates the needs to be replenished. The four aqueous process streams will constitute a volume of 33,000 gallons per cycle and will use three chemicals including water. Approximately 90 per cent of the cesium eluting agent (ammonium carbonate-ammonium hydroxide) is recovered from the cesium product and recycled. Fresh eluting agent is prepared by absorbing ammonia and carbon dioxide gases in water. Composition and the per cycle requirements for the process streams used for processing stored supernatant waste are shown in Table VI-5.

C. ESSENTIAL MATERIALS: REQUIREMENTS AND SPECIFICATIONS

To prevent isotopic dilution of strontium, cerium, and cesium products, the essential materials used in the Waste Fractionization

TABLE VI-3

AQUEOUS AND ORGANIC PROCESS STREAMS FOR PROCESSING ACIDIFIED SLUDGE WASTE

Basis: 4800 gal. PAS/batch for Fe-Al Removal*
4000 gal. 1AF/day for solvent extraction

Function	Stream Designation	Stream Composition	Gal. Batch	Gal. sol'n. per day	SpGr
Iron-Aluminum Removal	BS add	6M $NaHSO_4$	1410*		1.44
	pH adjust	1.8M Na_2CO_3	2256*		1.21
Sulfate Precipitation	Pb carrier	1M $Pb(NO_3)_2$	174*		1.28
	Sul. cake wash	H_2O	1200*		1.00
	Slurry water	H_2O	480*		1.00
Metathasis	Met. sol'n.	4.3M NaOH, 0.43M Na_2CO_3	800		1.20
	Car. cake wash	0.1M Na_2CO_3	1200*		1.00
	CC dissolve	2.2M HNO_3	480		1.07
Feed Butt (for 3200 gal. 1AF)	Dil. water	H_2O	479	600	1.00
	Buffer butt	11.5M HAcOH (hydroxyacetic acid)	139	170	1.23
	Chelate butt	1.57M Na_3HEDTA	510	640	1.32
	Tartrate butt	4M tartaric acid	20	25	1.26
	pH adjust	19M NaOH	102	130	1.53
Extractant	1AX	0.3M D2EHPA, 0.2M TBP, hydrocarbon diluent		12,000 (240)**	0.80
Scrub	1SS butt	2.5M HAcOH, 0.15M NaOH pH 1.8		480	1.19
	1SS dilution water	H_2O		1900	1.00
Strontium Strip	1BX butt	1M HNO_3		180	1.03
	1BX dilution water	H_2O		5800	1.00
Calcium Strip	1CX	0.2M HNO_3		2400	1.01
	1CS	0.3M D2EHPA, 0.2M TBP, hydrocarbon diluent		2400 (48)**	0.80
Rare Earth Strip	RE strip	2M HNO_3	1440	3800	1.07
	Acid kill	1.4M sugar	63	170	1.18
Organic Wash	1OS	2.5M NaOH, 0.1M citrate	360	2900	1.10
Organic Butt	1OO butt	12.2M HNO_3	31	250	1.15

* Used in three equal portions

** Approximately 98 percent of the organic extractant is recycled. The number in parenthesis represents the 2 percent of new extractant needed to replace that lost during processing.

TABLE VI-4

AQUEOUS AND ORGANIC PROCESS STREAMS FOR PURIFYING CRUDE STRONTIUM

Basis: Crude Sr from PAW-ZAW 6000 gal. 1AF/day
Crude Sr from PAS 3000 gal. 1AF/day

Function	Stream Designation	Stream Composition	PAW-Sr gal.sol'n. / day	PAS-Sr gal.sol'n. / day	SpGr
Feed Butt	Buffer butt	10M acetic acid	1400	1400	1.06
	Chelate butt	1.05M Na_5DTPA	490	270	1.32
	pH adjust	19M NaOH	410	420	1.52
Extractant	1AX	0.3M D2EHPA, 0.2M TBP, hydrocarbon diluent	11000 (220)*	11000 (220)*	0.80
Scrub	1SS butt	2.1M citric acid, 0.6M Na_5DTPA	340	300	1.14
	1SS dilution water	H_2O	3000	2700	1.00
Strontium Strip	1BX butt	3M citric acid	920	700	1.23
	1BX dilution water	H_2O	1800	1400	1.00
Citrate Kill	1BP peroxide	3.7M H_2O_2	3000	2300	1.04
	1BP acid butt	12.2M HNO_3	450	360	1.35
Organic Wash	1CX	2M HNO_3	6000	3000	1.07
	1OS-1	2M NaOH	21000	11000	1.08
	1OS-2	2M HNO_3	6000	3000	1.07

* Approximately 98 percent of the organic extractant is recycled. The number in parenthesis represents the 2 percent of new extractant needed to replace that lost during processing.

TABLE VI-5

AQUEOUS PROCESS STREAMS FOR PROCESSING STORED SUPERNATANT WASTES

Basis: 46,450 gal. PSN/day (60,000 gal. cycle)

Function	Stream Designation	Stream Composition	Amount / Cycle	SpGr
Inorganic Ion Exchanger Addition	Bed make-up	Zeolite AW-500	200 lbs.*	0.8
Column Wash	Column wash	H_2O	4500 gal.	1.0
Sodium Removal	Sodium eluent	0.2M $(NH_4)_2CO_3$ 0.1M NH_4OH	12,000 gal.	1.0
Column Wash	Column wash	H_2O	4500 gal.	1.0
Cesium Eluent	Eluent	3M $(NH_4)_2CO_3$, 2M NH_4OH	12,000 gal.** (120)	1.11

* Inorganic ion exchanger will be added only when needed.
** Approximately 90 percent of the eluent is recycled. The number in parenthesis is the amount of solution which must be added to make-up for that lost during processing.

Plant recovery operations should be as free from these elements as reasonably possible. There is no concern about the isotopic dilution of promethium as it does not exist in nature; however, it is desirable to minimize the amounts of other rare earths added with the process chemicals. Other elements, such as the alkaline earths, behave like strontium in D2EHPA solvent extraction and can constitute a product purity problem if they are not limited in the essential materials.

The alkaline earths, including strontium, are commonly present as contaminates in some essential materials; therefore, alkaline earth limits are required on those essential materials used in strontium processing. Table VI-6 shows the amount of impurities which could be added to the strontium product by way of the essential materials during the processing of one ton of irradiated uranium metal through the Purex Plant, the Waste Fractionization Plant, and the strontium purification cycle, assuming impurity limits listed in the Essential Materials Manual are reached.

TABLE VI-6

POTENTIAL SOURCES OF ALKALINE EARTH IMPURITIES IN STRONTIUM PRODUCT FROM PROCESSING ONE TON OF URANIUM

Material	lb. used / Ton U	Impurity Limit (ppm) Sr	Ca	Mg	Amount added / Ton Uranium Sr gms	Sr %	Ca gms	Ca %	Mg gms	Mg %
Uranium	2000	1	5	10	.907	51.8	4.53	38.5	9.07	88.8
Purex Processing										
Nitric Acid	330	0.2	2	1	.030	1.7	.30	2.5	.15	1.5
Ferrous Sulfamate	27	10	80	1	.123	7.0	.98	8.3	.01	0.1
Hydrazine	1	1	20	1	nil	-	.01	0.1	nil	-
Sulfamic Acid	5	10	40	1	.011	0.6	.02	0.2	.09	0.9
Sodium Nitrite	13	2	20	2	.012	0.7	.12	1.0	.01	0.1
Sugar	49	3	16	1	.066	3.8	.36	3.1	.02	0.2
Process Water	100,000	.005	0.1	.003	.227	13.0	4.54	38.6	.14	1.4
Total Purex Processing					.469	26.8	6.33	53.8	.42	4.1
Total in PAW (Uranium+Purex)					1.376	78.6	10.86	92.3	9.49	92.9
B-Plant Mainline										
Process Water	510	.005	0.1	.003	.001	0.1	.02	0.2	nil	-
Nitric Acid	17	0.2	2	1	.001	0.1	.02	0.2	.01	0.1
Sodium Hydroxide	7	20	40	10	.064	3.7	.13	1.1	.03	0.3
Tartaric Acid	3	2	20	10	.003	0.2	.03	0.3	.01	0.1
Hydroxyacetic acid	18	1	10	2	.008	0.5	.08	0.7	.02	0.2
HEDTA	62	2	10	10	.056	3.2	.28	2.4	.28	2.7
Total B-Plant Mainline					.133	7.6	.56	4.8	.35	3.4
Strontium Purification										
Process Water	13	.005	0.1	.003	nil	-	nil	-	nil	-
DTPA	1	100	300	400	.045	2.6	.14	1.2	.18	1.8
Acetic Acid	2	100	100	100	.091	5.2	.09	0.8	.09	0.9
Sodium Hydroxide	1	20	40	10	.009	0.5	.02	0.2	nil	-
Citric Acid	2	100	100	100	.091	5.2	.09	0.8	.09	0.9
Hydrogen Peroxide	1	10	10	10	.005	0.3	.01	0.1	.01	0.1
Nitric Acid	1	0.2	2	1	nil	-	nil	-	nil	-
Total Strontium Purification					.241	13.8	.35	3.0	.37	3.6
Total Added					1.750	100	11.77	100	10.21	100

TABLE VI-7

ESSENTIAL MATERIALS FOR WASTE FRACTIONIZATION

Materials that are normally liquid Chemical Name	Formula	Formula Weight	Wt. %	Moles per Liter	SpGr
Acetic Acid	CH_3COOH	60	100 80 57	17.4 14.25 10	1.05 1.07 1.06
DTPA pentasodiumdiethylenetriaminepentaacetate Chel DTPA-41 (1) DTPA NA 5-80 (2) Versenex (3)	$(NaOOCCH_2)_2N-CH_2CH_2-N(CH_2COONa)-CH_2CH_2-N(CH_2COONa)_2$	503	41	1.05	1.32
D2EHPA Di(2-ethylhexyl)phosphoric acid Bis(2-ethylhexyl)hydrogen phosphate	$(CH_3CH_2CH_2CH_2CH(C_2H_5)CH_2O)_2POOH$	322	97	2.82	0.973
HEDTA trisodiumhydroxyethylethylenediaminetriacetate Chel DM-41 (1) HEDTA NA-3-120 (2) Versenol-120 (3)	$(HOCH_2CH_2)(NaOOCCH_2)_2N-CH_2CH_2-N(CH_2COONa)_2$	344	41	1.57	1.285
Hydrogen Peroxide	H_2O_2	34	12.2	3.7	1.01
Hydroxyacetic Acid Glycolic Acid	$HOCH_2COOH$	76	70	11.5	1.25
Nitric Acid	HNO_3	63	57	12.2	1.35
NTA trisodiumnitrilotriacetate Chel NTA-35 (1) $NTANa_3$-158 (2)	$(NaOOCCH_2)_2N-CH_2-COONa$	257	35	1.80	1.32
n-Paraffin Hydrocarbon NPH	$C_{10}H_{22}$ to $C_{14}H_{30}$				0.75
Sodium Hydroxide caustic	$NaOH$	40	50	19	1.53
Tributyphosphate TBP	$(C_3H_9O)_3PO$	266	100	3.59	0.978

Materials that are normally crystalline or powder Chemical Name	Formula	Formula Weight	Wt. %	g/l	lbs./gal.	M	SpGr
Citric Acid	$H_2-C-COOH$ $HO-C-COOH$ $H_2-C-COOH$	192	18 33 47 59	192 384 576 768	1.6 3.2 4.8 6.4	1 2 3 4	1.08 1.15 1.23 1.30
Lead Nitrate	$Pb(NO_3)_2$	331	26	331	2.8	1	1.28
Lead Monoxide litharge	PbO	223					8.0
Silver Nitrate	$AgNO_3$	170	1 10	10 100	0.08 0.8	0.06 0.6	1.01 1.09
Sodium Bisulfate	$NaHSO_4 \cdot H_2O$	138	57	828	6.9	6	1.44
Sodium Carbonate	Na_2CO_3	106	18	212	1.8	2	1.21
Sodium Nitrite	$NaNO_2$	69	18	207	1.7	3	1.12
Sodium Persulfate	$Na_2S_2O_8$	238	11 20 37	119 238 476	1.0 2.0 4.0	0.5 1.0 2.0	1.11 1.21 1.30
Sugar	$C_{12}H_{22}O_{11}$	324	38	454	3.8	1.4	1.18
Sulfamic Acid	NH_2SO_3H	97	13	150	1.3	1.54	1.15
Tartaric Acid	$HO-C(H)-COOH$ $HO-C(H)-COOH$	150	48	603	6.1	4	1.26
Material that is received as a liquidified gas							
Ammonia	NH_3	17					
Carbon Dioxide	CO_2	44					

(1) Trade name of Geigy Chemical Corp.
(2) Trade Name of Pfizer Chemicals
(3) Trade name of Dow Chemical Co.

DECLASSIFIED

Cesium, cerium, manganese and the rare earths are uncommon contaminates in the essential materials used in the Waste Management Plant; therefore, limits for these elements are not included in essential materials specifications. Periodically, the essential materials are monitored for the presence of cesium, cerium, manganese, and rare earths, and any unfavorable trends in the quantities of these elements entering the process can be corrected by the Production Section.

Purchase specifications for the essential materials required by the Waste Fractionization Plant are included as Appendix A to this chapter. The chemical name, the common or trade names, the chemical formula, and the formula weight of the essential materials used or proposed for future use in the Waste Fractionization Plant are given in Table VI-7. In addition, the expected concentration, specific gravity, and moles per liter of the liquid essential materials are given. With the crystalline essential material chemicals is a table showing the weight percent, grams per liter, pounds per gallon, molarity, and specific gravity of selected aqueous stock solutions made from these chemicals.

1. Current Acid Waste

The essential materials required for processing 3200 gallons of ZAW per day are shown in the table below. The impurity limits for the alkaline earths and the percent of impurities the essential materials could contribute to the strontium product should the impurity limit be reached are shown in Table VI-6 in detail as well as in the table below. As mentioned earlier in this section, the rare earths are uncommon contaminates; therefore, no impurity limits are set on those essential materials which affect only rare earth recovery.

TABLE VI-8

ESSENTIAL MATERIALS REQUIRED FOR PROCESSING CURRENT ACID WASTE

Material	lbs/day		Impurity Limit (ppm)			% Contributed (PAW)		
	PAW	ZAW	Sr	Ca	Mg	Sr	Ca	Mg
Hydroxyacetic Acid	1500	1700	1	10	2	0.5	0.7	0.2
Na_3HEDTA	5000	11,000	2	10	10	3.2	2.4	2.7
Nitric Acid	5200	6400	0.2	2	1	0.1	0.2	0.1
Sodium Hydroxide	3100	3200	20	40	10	3.7	1.1	0.3
Tartaric Acid	220	240	2	20	10	0.2	0.3	0.1
Process Water	80,000	90,000	0.005	0.1	0.003	0.1	0.2	nil
Sodium Persulfate	560	620	Used for promethium recovery					
Silver Nitrate	6	6	Used for promethium recovery					
Sodium Nitrite	140	150	Used for promethium recovery					
Sugar	150	190	Used for promethium recovery					
D2EHPA	160	190	Impurities removed by solvent treatment					
TBP	90	100	Impurities removed by solvent treatment					
Hydrocarbon Diluent	1300	1400	Impurities removed by solvent treatment					
Citric Acid	270	300	Impurities removed by solvent treatment					

As can be seen by the above table, the amount of essential materials required to process ZAW is somewhat higher than the amount of essential materials required for PAW. The percent of impurities contributed to the strontium product by the essential materials would,

DECLASSIFIED

therefore, be proportionally higher than the percentages listed in the table which is based on PAW. The amount of impurities added by B-Plant processing to the product are small compared to the impurities present in the uranium metal and those added during Purex processing.

2. Acidified Sludge Waste

Iron, aluminum, and manganese are removed from acidified sludge waste by means of a precipitation process operated independently of the solvent extraction process. Because the precipitation process is independent of the solvent extraction process, it can operate essentially continuously as needed. The solvent extraction feed material prepared by the precipitation process is accumulated over a period of time, and processed through the solvent extraction equipment on a campaign basis.

TABLE VI-9

ESSENTIAL MATERIALS REQUIRED FOR PROCESSING STORED SLUDGE WASTE

Material	lbs/day	Impurity Limit (ppm) Sr	Ca	Mg	% Contributed Sr	Ca	Mg
Precipitation Process for Removal of Iron and Aluminum							
Lead nitrate	400	50	50	10	9.4	4.3	1.4
Sodium bisulfate	7100	2	10	10	6.6	15.3	25.3
Sodium carbonate	3300	10	30	20	15.3	21.2	23.5
Sodium hydroxide	960	20	40	10	9.0	8.3	3.4
Process water	54,000	0.005	0.1	0.003	0.1	1.2	0.1
Solvent Extraction Process							
Hydroxyacetic acid	2000	1	10	2	0.3	1.4	0.5
Na_3 HEDTA	2900	2	10	10	0.9	2.1	3.4
Nitric acid	6400	0.2	2	1	0.1	0.6	0.5
Sodium hydroxide	3300	20	40	10	30.0	27.7	11.5
Process water	140,000	0.005	0.1	0.003	0.1	0.5	nil
Tartaric acid	130	2	20	10	nil	0.2	0.2
Sugar	640	Used for promethium recovery					
D2EHPA	230	Impurities removed by solvent treatment					
TBP	130	Impurities removed by solvent treatment					
Hydrocarbon diluent	1800	Impurities removed by solvent treatment					
Citric acid	460	Impurities removed by solvent treatment					

The essential materials required for processing 4000 gallons of Purex Acid Sludge (PAS) a day through the precipitation process is shown in the Table (VI-9) below. The table also shows the essential materials required for processing 4000 gallons per day of solvent extraction feed prepared from sludge waste. Because the alkaline earth impurity content varies widely with various feeds, it is not practical to show the effect of essential materials impurities on the total impurities found in the strontium product. However, the table below does show the impurity limits for the alkaline earths and the per cent of impurities the essential materials used in waste fractionization and strontium purification could contribute to the strontium product should the impurity limit be reached.

3. Stored Supernatant Waste

Cesium is recovered from stored supernatant waste by an ion exchange process. The time cycle for each ion exchange cycle (loading, washing, and eluting the column) is between 30 and 35 hours. Periodically fresh inorganic ion exchanger is added to the ion exchange column to replace the amount lost during each cycle by attrition. The amount of inorganic ion exchanger lost each cycle is estimated to be around 200 pounds. The sodium eluent or sodium wash, which is a dilute ammonium carbonate and ammonium hydroxide mixture, is made by absorbing carbon dioxide gas and liquified ammonia gas in water. Cesium product eluent, which is a more concentrated ammonium carbonate and ammonium hydroxide mixture, is recovered by distillation from the cesium product. About 2.5 per cent of the ammonia and 7 per cent of the carbon dioxide present in the cesium eluent are lost each cycle and must be replaced. In addition to the ammonia and carbon dioxide lost each cycle, up to 10 per cent of the total ammonia and carbon dioxide required is lost through physical process losses and has to be replaced.

The essential materials required for processing a 60,000 gallon batch of supernatant waste are shown in the table below.

TABLE VI-10

ESSENTIAL MATERIAL REQUIRED FOR PROCESSING SUPERNATANT WASTE

Material	Function	Amt. /cycle
Zeolite inorganic ion exchanger	Bed Make-up	200 lbs.(1)
Ammonia	Sodium Eluent	850 lbs.
Carbon Dioxide	Sodium Eluent	880 lbs.
Process water	Sodium Eluent	98,000 lbs.
Ammonia	Cesium Eluent Make-up	340 lbs.
Carbon Dioxide	Cesium Eluent Make-up	930 lbs.

(1) Ion exchange medium is added only when operating characteristics of the column indicates it needs additional medium.

4. Strontium Purification

As mentioned in Section A, once or twice a year crude strontium recovered from current and sludge waste is purified by a solvent extraction process to prepare feed material for the fission product program. The impurities in the crude strontium fractions recovered from current waste differ widely from the impurities in crude strontium recovered from sludge, particularly in the amount of calcium present. The flowsheet used is dependent on the impurities present; therefore, the amount of material required to process crude strontium from current and stored waste are different.

4.1 Purification of Strontium Recovered From Current Waste

The essential materials required for processing 6000 gallons a day of solvent extraction feed prepared from the crude strontium recovered from current waste are given below. The impurity limits for the alkaline earths and the percent of impurities the essential materials could contribute to the strontium product should the impurity limit be reached are shown in Table VI-6 in detail as well as in the Table VI-11 below.

[redacted]

TABLE VI-11

ESSENTIAL MATERIALS REQUIRED FOR PURIFYING

STRONTIUM RECOVERED FROM CURRENT WASTE

Material	lbs/day	Impurity Limit (ppm) Sr	Ca	Mg	% Contributed Sr	Ca	Mg
Acetic acid	7000	100	100	100	5.2	0.8	0.9
Na_5DTPA	3000	100	300	400	2.6	1.2	1.8
Citric acid	5600	100	100	100	5.2	0.8	0.9
Hydrogen peroxide	3200	10	10	10	0.3	0.1	0.1
Nitric acid	17,000	0.2	2	1	nil	nil	nil
Sodium hydroxide	16,000	20	40	10	0.5	0.2	nil
Process water	300,000	0.005	0.1	0.003	nil	nil	nil
D2EHPA	200	Impurities removed by solvent treatment					
TBP	100	Impurities removed by solvent treatment					
Hydrocarbon diluent	1300	Impurities removed by solvent treatment					

It should be pointed out that a portion of the nitric acid, sodium hydroxide, and process water is used to treat the solvent and therefore will not contribute impurities to the strontium product. The percent contributed above takes this into consideration.

4.2 Purification of Strontium Recovered From Acidified Sludge Waste

The essential materials required for processing 3000 gallons per day of solvent extraction feed prepared from the crude strontium recovered from stored sludge are given in the table below. The impurity limits for the alkaline earths and the percent of impurities the essential materials used in waste fractionization and strontium purification could contribute to the strontium product should the impurity limit be reached are also shown in the table below.

TABLE VI-12

ESSENTIAL MATERIALS REQUIRED FOR PURIFYING

STRONTIUM RECOVERED FROM STORED WASTE

Material	lbs/day	Impurity Limit (ppm) Sr	Ca	Mg	% Contributed Sr	Ca	Mg
Acetic acid	7000	100	100	100	14	6.5	10.8
Citric acid	5500	100	100	100	2.0	0.9	1.5
Na_5DTPA	1900	100	300	400	3.9	5.4	11.9
Hydrogen peroxide	2400	10	10	10	0.5	0.2	0.4
Nitric acid	9000	0.2	2	1	nil	nil	nil
Sodium hydroxide	10,000	20	40	10	1.1	1.0	0.4
Process water	170,000	0.005	0.1	0.003	nil	nil	nil
D2EHPA	200	Impurities removed by solvent treatment					
TBP	100	Impurities removed by solvent treatment					
Hydrocarbon diluent	1300	Impurities removed by solvent treatment					

D. SOURCE AND STORAGE OF PROCESS CHEMICALS

1. Acetic Acid

Acetic acid is received in railway tank cars as an 80 weight per cent aqueous solution. The acetic acid is stored in three 8000-gallon vertical stainless steel tanks ST-131, ST-132, and ST-133 located in the 211-B chemical tank farm. Because of the potential fire hazard of acetic acid, the three storage tanks are surrounded by a 3-foot concrete dike. The storage tanks also have an inert gas blanket system, and carbon dioxide purged weight factor instruments. The acetic acid storage

tanks are lagged and heated, and the piping system is steam-traced to prevent the acid from freezing. From the Chemical Tank Farm the acetic acid is pumped to weigh tank WT-503 on the third floor mezzanine of the 271-B Building.

2. Ammonia

Anhydrous ammonia is received in tank trucks and stored in a 12,200 gallon pressure vessel SN-172 which is located in the 211-B Chemical Tank Farm.

3. Carbon Dioxide

Liquified carbon dioxide is received in the 211-B tank farm in tank trucks and is stored in a 24-ton refrigerated storage tank SB-191 located in the 211-B chemical tank farm.

4. Citric Acid

Citric acid is received as a bulk crystalline dry chemical and is stored on the third floor of the 271-B Building.

5. DTPA

The sodium salt of diethylenetriaminepentaacetic acid is received in tank cars as a 40 weight percent aqueous solution. The material is stored in an 11,500-gallon horizontal tank SK-161, located in 211-B chemical tank farm.

6. D2EHPA

The organic solvent di(2-ethylhexyl)phosphoric acid is received in 55-gallon drums. The drums are stored on the loading platform of the 276-B Building (organic make-up building) until they are needed.

7. HEDTA

The sodium salt of the chelating agent hydroxyethylethylenediaminetriacetic acid is received in tank cars as a 40 weight per cent aqueous solution. The material is stored in four 8000-gallon vertical stainless steel tanks, SE-125, SE-126, SE-127, and SE-128, located in the 211-B chemical tank farm. Tanks SE-125, SE-126, and SE-127 are lagged and equipped with steam coils to keep the material from freezing. Tank SE-128 can be used for emergency chelate storage, but is neither lagged nor equipped with a steam coil.

8. Hydrogen Peroxide

Hydrogen peroxide is received in 30-gallon drums as a 12 weight percent aqueous solution. The drums are both stored and used on the third floor of the 271-B Building.

9. Hydroxyacetic Acid

Hydroxyacetic (glycolic) acid is received in railway tank cars as a 70 weight percent aqueous solution. The solution is stored in three 8000-gallon vertical stainless steel tanks, SF-120, SF-121, and SF-122, located in the 211-B chemical tank farm.

10. Lead Nitrate

Lead nitrate is received as a bulk crystalline dry chemical in bags, and is stored on the third floor of the 271-B Building. At the time this chapter was written litharge, PbO, dissolved in nitric acid was being considered as a substitute for lead nitrate. Litharge would also be received as a bulk dry powder in bags and stored on the third floor of the 271-B Building.

11. Nitric Acid

Nitric acid is received in tank trucks as a 57 weight percent aqueous solution. The acid is stored in three 8000-gallon stainless steel storage tanks, SA-101, SA-102, and SA-103, located in the 211-B chemical tank farm.

12. N-Paraffin Hydrocarbon

The organic diluent n-paraffin hydrocarbon (NPH) is received in railway tank cars and stored in two mild steel storage tanks buried underground adjacent to the 276-B (organic make-up) building. Tank SO-151 has a capacity of 20,000 gallons and tank SO-152 has a capacity of 11,500 gallons.

13. Process Water

Demineralized process water is prepared from the 200 East Area Sanitary water supply by means of a two-stage ion exchange unit. The ion exchange unit is a commercial water demineralizer built by the Graver Water Conditioning Company of New York. The unit was originally purchased in 1953 as part of the Purex prototype equipment and installed in the 321 Building. Later the equipment was moved to the Semiworks in the 200 East Area. Finally the demineralizer was moved to its present location in the 211-B chemical tank farm along with the enclosing steel and transite building 217-B. The first stage of the demineralizer is a hydrogen unit or cation exchanger filled with a strongly acidic ion exchange medium Nalcite HCR-W (Dowex 50W). The second stage of the unit was originally a mixed bed unit containing both anion and cation exchange medium; however, the unit was converted to an anion unit containing a weakly basic ion exchange medium such as Amberlite IRA-93. Converting the mixed bed unit to an anion unit had the advantage of having the same ion exchange media in the B-Plant unit as are in the Purex units. The water demineralizer is capable of supplying 240,000 gallons of water at a rate of 50 gpm between regeneration periods. The treated water has the following specifications:

Total hardness (as $CaCO_3$)	less than	2	ppm
Calcium	" "	0.2	ppm
Magnesium	" "	0.01	ppm
Strontium	" "	0.01	ppm
Sodium	" "	0.1	ppm
Chloride (as NaCl)	" "	0.6	ppm
Sulfates (as Na_2SO_4)	" "	1.5	ppm
Dissolved solids	" "	4.5	ppm
Silica (as SiO_2)	" "	7.5	ppm
pH		5 to 8	

An engineering flow diagram of the water demineralizer and the operating sequence for regenerating the demineralizer are included at the end of this chapter as Appendix B.

14. Silver Nitrate

Silver nitrate is received as a dry solid crystalline chemical in five-pound cartons. The chemical is stored on the third floor of the 271-B Building.

15. Sodium Bisulfate

Sodium bisulfate is received as a bulk dry chemical and is stored on the first floor of the 271-B Building.

16. Sodium Carbonate

Sodium carbonate is received as a bulk dry chemical and is stored on the first floor of the 271-B Building.

17. Sodium Hydroxide

Caustic solution is received in railway tank cars as a 50 per cent aqueous solution. The caustic solution is stored in three 16,000-gallon mild steel horizontal tanks, SQ-141, SQ-142, and SQ-143, located in the 211-B chemical tank farm. The caustic storage tanks are lagged and steam-heated. All exterior caustic lines are also lagged and steam-traced.

18. Sodium Nitrite

Sodium nitrite is received as a bulk dry chemical and is stored on the third floor of the 271-B Building.

19. Sodium Persulfate

Sodium persulfate is received as a bulk dry chemical and is stored on the third floor of the 271-B Building.

20. Sugar

Sugar used for denitrating product streams is received as a bulk dry crystalline chemical and is stored on the third floor of the 271-B Building.

21. Tartaric Acid

Tartaric Acid is received as a bulk dry crystalline chemical and is stored on the third floor of the 271-B Building.

22. TBP

Tributyl phosphate used in solvent make-up is received in 55-gallon drums and is stored on the loading platform of the 276-B Building. Care must be taken not to confuse TBP and D2EHPA drums which are stored in the same location.

23. Zeolite

The ion exchange medium zeolite AW-500 is received as bulk dry material and is stored on the third floor of the 271-B Building.

E. Make-up and Distribution of Cold Process Streams

The fractionization of wastes in the Waste Management Plant involves a number of independent but interrelated unit operations and processes. As many of the process solutions are common to the processing of different types of waste, the make-up and distribution of the process streams are discussed for each of the different functions or operations performed in the Waste Management Plant.

1. Stock chemicals and solutions

1.1 Process Water

Process or demineralized water is pumped from the Demineralized Water storage tank SD-111 and is delivered through the 111 Process Water Header throughout the operating gallery in the 211-B Building, and the Aqueous Make-up (AMU) areas located on the first and third floors of the 271-B Building.

1.2 Nitric Acid

Nitric acid, nominally 60 per cent nitric acid, is pumped from the nitric acid storage tanks, SA-101, SA-102, and SA-103, through the 1037 Nitric Acid Header to the third floor of the 271-B Building. The 1037 Nitric Acid Header supplies nitric acid to 27-3-A, cerium strip make-up tank, H-305 Utility tank, Scale Tank WT-501, and nitric acid storage tank H-309. Nitric acid is distributed to the operating gallery from the H-309 tank by way of the 309 Header.

1.3 Sodium Hydroxide (Caustic)

Fifty per cent sodium hydroxide is pumped from the caustic storage tanks SQ-141, SQ-142, and SQ-143 to AMU tanks H-301-1, H-303, H-304, H-305, H-402-1, H-310, and H-311, all located on the third floor of the 271-B Building and to tank 102 on the first floor of the 271-B Building. Sodium hydroxide is distributed throughout the operating gallery by way of the 310-311 Header which comes from the caustic storage tanks H-310 and H-311.

1.4 Chelates or Complexants

1.4.1 HEDTA

The chelating or complexing agent HEDTA is pumped from the chelate storage tanks SE-125, SE-136, SE-127, and SE-128, directly to the Feed Butt Make-up Tanks H-315 and H-316 on the third floor of the 271-B Building.

1.4.2 DTPA

The chelating agent DTPA, used only for strontium purification, is pumped from DTPA storage tank SK-161 to AMU tank H-301, ISS Butt Make-up, and scale tank 29-2-B, 1AF make-up scale tank located in the operating gallery.

1.5 Buffering Agents

1.5.1 Hydroxyacetic Acid

Hydroxyacetic acid buffering agent is pumped from storage tanks SF-120, SF-121, and SF-122 to scale tank WT-502 which is located on the third floor mezzanine of the 271-B Building.

1.5.2 Acetic Acid

Acetic acid buffering agent is pumped from storage tanks ST-131, ST-132, and ST-133 to scale tank WT-503 which is located on the third floor mezzanine of the 271-B Building.

1.6 3 M Citric Acid

A 3 M stock citric acid solution is made up in tank H-302 located on the third floor of the 271-B Building using water from the 111 Header and solid citric acid.

1.7 Sugar Solution

A 1.4 M sugar solution is made up in tank H-403 located on the third floor of the 271-B Building using water from the 111 Header and crystalline sugar.

1.8 Hydrocarbon Diluent

Hydrocarbon diluent is pumped from the underground diluent storage tanks SO-151 and SO-152 to the solvent make-up tank MO-154 located in the 276-B Building.

1.9 D2EHPA

Solvent D2EHPA is pumped from the drums in which it is received with an air-powered drum unloading pump to tank O-201 in the 276-B organic make-up building. From tank O-201 D2EHPA is pumped to the solvent make-up tank MO-154 as needed.

1.10 TBP

TBP is pumped from the drums in which it is received with an air-powered drum unloading pump to Tank 0-202 located in the 276-B Building. From 0-202 the TBP is pumped to the solvent make-up Tank MO-154 as needed.

1.11 Lead Nitrate Solution

A 1 M lead nitrate solution is made up in Tank H-401 which is on the third floor mezzanine of the 271-B Building. The lead nitrate solution is made by dissolving crystalline lead nitrate in water. An alternate method dissolving litharge (PbO) in nitric acid has been proposed.

1.12 Sodium Bisulfate Solution

A 6 M sodium bisulfate solution is made up in Tank 101, which is located on the first floor of the 271-B Building. The solution is made by dissolving solid sodium bisulfate in water.

1.13 Sodium Carbonate Solution

A 1.8 M sodium carbonate solution is made up in Tank 102 by dissolving soda ash in water. The 102 tank is located on the first floor of the 271-B Building.

2. Leaching of Solids in Current Acid Wastes

The sugar denitrated acid waste from the Purex Plant contains an appreciable amount of solid material. Over 50 per cent of the strontium and 70 per cent of the promethium present in the waste may be associated with these solids. The solids are centrifuged from the waste solution and strontium and rare earths are leached from solids with water, a nitric acid solution, and a caustic-tartrate solution according to the flowsheet shown in Figure IV-1. A flow diagram for the process solutions required for leaching Purex Acid Waste is shown in Figure VI-1 and the composition of the process streams are shown in the following table.

TABLE VI-13

PROCESS SOLUTIONS REQUIRED FOR LEACHING CURRENT ACID WASTES

Process Stream	Make-up Tank	Composition
Water leach	12-2-B	H_2O
Acid leach	12-2-C	4M HNO_3
Caustic-tartrate leach	H303-H304	1.5M NaOH, 0.1M Tartaric acid
Cake removal	12-2-C	6M NaOH

Water from the 111 Header is added to the centrifuge from scale tank 12-2-B which is located in the operating gallery.

The acid leach is made up in scale tank 12-2-C with water from the 111 Header and nitric acid from the 309 Header.

The caustic-tartrate leach is made up in AMU tanks H303 and H304 with water from the 111 Header, sodium hydroxide either directly from the caustic header or from the caustic head tank, H301-1, and solid tartaric acid. After being made up, the caustic-tartrate leach is dropped to scale tank 12-2-B, which is located in the operating gallery, via the 303-304 Header.

The solution used to remove the leached solids from the centrifuge is made up in scale tank 12-2-C with water from the 111 Header, and sodium hydroxide from the 310-311 Header.

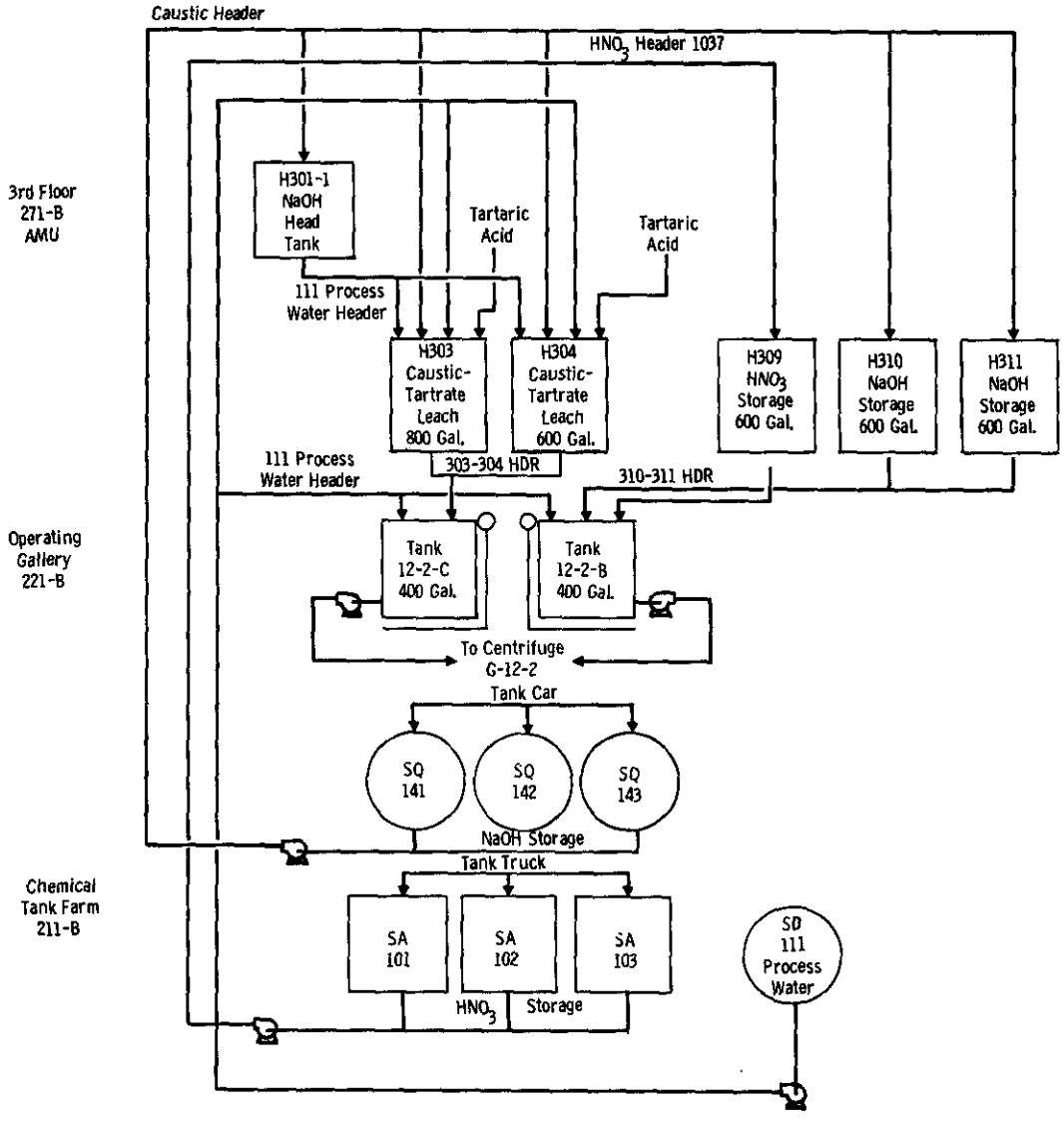

FIGURE VI-1

Flow Diagram for Process Solutions Required for Leaching Purex Acid Waste

3. Iron and Aluminum Removal Precipitation Process

A sulfate precipitation process is used to remove the bulk of the iron, manganese, and aluminum present in acidified sludge waste. In the flowsheet shown in Figure IV-3, the alkaline earths and the rare earths along with the lead carrier ion are precipitated as sulfates, metathesized to carbonate, then dissolved with nitric acid. A flow diagram for the process solutions is shown in Figure VI-2 and the composition of the process streams is shown in the following table.

TABLE VI-14

PROCESS SOLUTIONS REQUIRED FOR THE PRECIPITATION PROCESS

Process Stream	Make-up Tank	Composition
Bisulfate Add	Tank 101	6M $NaHSO_4$
pH Adjust	Tank 102	1.8M Na_2CO_3
Lead Addition	H401	1M $Pb(NO_3)_2$
Water Wash and Cake Slurry	31-3-A and 32-3-C	H_2O
Metathasis Solution	31-3-F	4.3M NaOH, 0.43M Na_2CO_3
Carbonate Cake Wash	31-3-F	0.1M Na_2CO_3
Cake Dissolvent	32-2-C	5.5M HNO_3

Sodium bisulfate is made up in the 101 tank using process water and solid sodium bisulfate. The sodium bisulfate solution is pumped to scale tank 31-3-A which is located in the operating gallery. From 31-3-A the bisulfate solution is dropped to the precipitator tank 31-3. Sodium carbonate is made up in Tank 102 using process water and solid sodium carbonate (soda ash). The sodium carbonate solution is pumped to scale tank 31-3-F which is located in the operating gallery, and from there dropped to Tank 31-3.

Lead nitrate solution is made up in tank H-401 which is located on the mezzanine of the AMU area on the third floor of the 271-B Building. Process water and crystalline lead nitrate are used for making up the lead nitrate solution. An alternate method of making lead nitrate solution by dissolving litharge (PbO) in nitric acid has been proposed. The same make-up tank will be used if dissolved litharge is adopted. The lead nitrate solution is dropped to scale tank 31-3-E via the 401 header. From tank 31-3-E the solution is added to process tank 31-3.

Wash water for the sulfate precipitate is obtained from the 111 Header and is added to the precipitator via the 31-3-A scale tank. Water to slurry the precipitate from the centrifuge is added via the 32-2-C scale tank.

The metathesis solution is made up in scale tank 31-3-F using 50 per cent NaOH from the 310-311 Header, sodium carbonate from the 102 Header, and water from the 111 Header.

The metathesis cake wash is also made up in scale tank 31-3-F using water from the 111 Header and sodium carbonate from the 102 Header.

The carbonate cake is dissolved with nitric acid solution made up in scale tank 32-2-C using water from the 111 Header and nitric acid from the 309 Header.

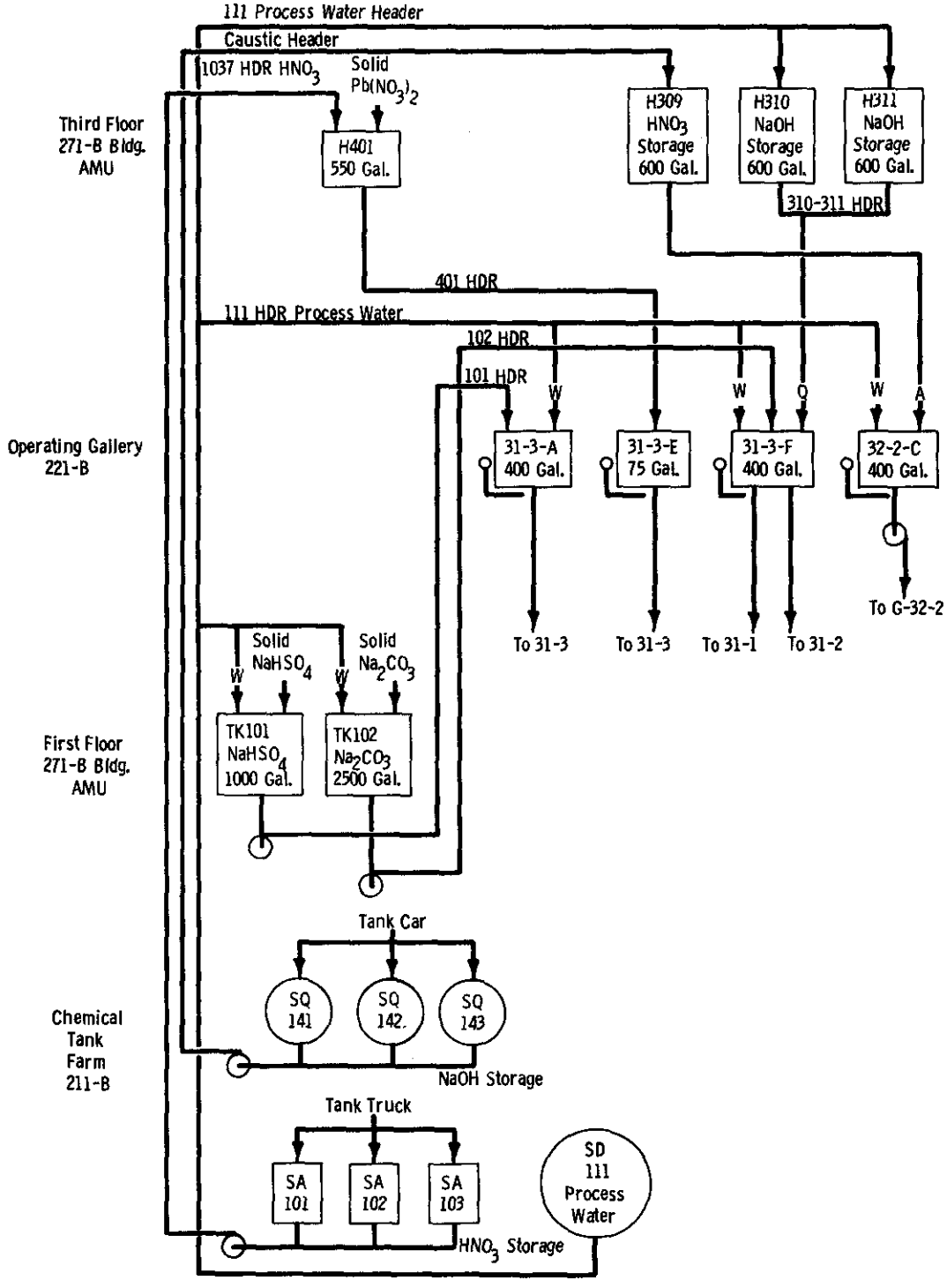

FIGURE VI-2

Flow Diagram for the Process Solutions Required for the Precipitation Process

4. Solvent Extraction Feed Make-Up

Feed materials for the solvent extraction process are made up by adding a buffering agent and a chelating agent to a crude feed solution and adjusting the pH of the solutions to the desired values with sodium hydroxide or nitric acid. Hydroxyacetic acid is used as the buffering agent when processing PAW, ZAW, and PAS as it has high buffering capacity at pH 4. Because acetic acid has a high buffering capacity at the required pH of 4.9, it is used as the buffering agent during the purification of the crude strontium fraction. The choice of chelating agent or agents is somewhat uncertain and subject to change through optimization of flowsheets by plant tests. At the time this chapter was written, HEDTA, with a small amount of tartaric acid, was the chelating agent being considered for processing PAW, ZAW, and PAS. DTPA was the chelating agent being considered for purifying the crude strontium fraction. The basis for choosing chelating agents and buffering agents is discussed in detail in Chapter IV.

In making up solvent extraction feed solutions the feed butts may be added as separate chemical additions or the butts may be combined in the feed butt make-up tank and added as a mixture. In the table below, the feed butts are expressed as separate solutions; however, the solutions are combined as a mixture before being added to the 1AF make-up tank. A flow diagram for the process solutions is shown in Figure VI-3.

TABLE VI-15

PROCESS SOLUTIONS REQUIRED FOR SOLVENT EXTRACTION FEED MAKE-UP

Process Stream	Make-up Tank	Composition
Feed butts for PAW, ZAW and PAS		
Chelate butt	H315 and H316	1.57M Na_3HEDTA
Buffer butt	H315 and H316	11.5M Hydroxyacetic acid
Tartrate butt	H315 and H316	4M Tartaric acid
pH adjust	29-2-B	19M NaOH for PAW and PAS 12.2M HNO_3 for ZAW
Feed butts for strontium purification		
Chelate butt	29-2-B	1.05M Na_5DTPA
Buffer butt	H315 and H316	10M Acetic acid
pH adjust	29-2-B	19M NaOH

When processing PAW, ZAW, and PAS, liquid chelating agent is pumped from the 211-B chemical tank farm to tanks H-315 and H-316, the feed butt make-up tanks. Hydroxyacetic acid buffer is added to H-315 and H-316 from weigh tank WT-502. The tartaric acid butt is made up in H-316 and H-315 from solid tartaric acid and process water from the 111 Header. The feed butts are dropped from the make-up tanks to scale tank 29-2-A located in the operating gallery via the 315-316 Header. The pH of the feed solution is adjusted with sodium hydroxide or nitric acid added from scale tank 29-2-B which is also located in the operating gallery. Sodium hydroxide for 29-2-B is obtained from the 310-311 Header, and nitric acid is ob-

tained from the 309 Header. Process water is also available to scale tanks 29-2-A and 29-2-B from the 111 Header. Additional adjustment of the feed solution can be made in the IAF feed tank 29-3 by additions from H-315 and H-316 through scale tank 29-3-E.

When purifying the crude strontium fraction, the chelate butt is pumped from the 211-B tank farm to scale tank 29-2-B which is located in the operating gallery. The acetic acid buffer is added to H-315 and H-316 from weigh tank WT-503. From H-315 and H-316 the buffer butt is dropped to scale tank 29-2-A. The pH is adjusted with caustic or acid from the 29-2-B tank.

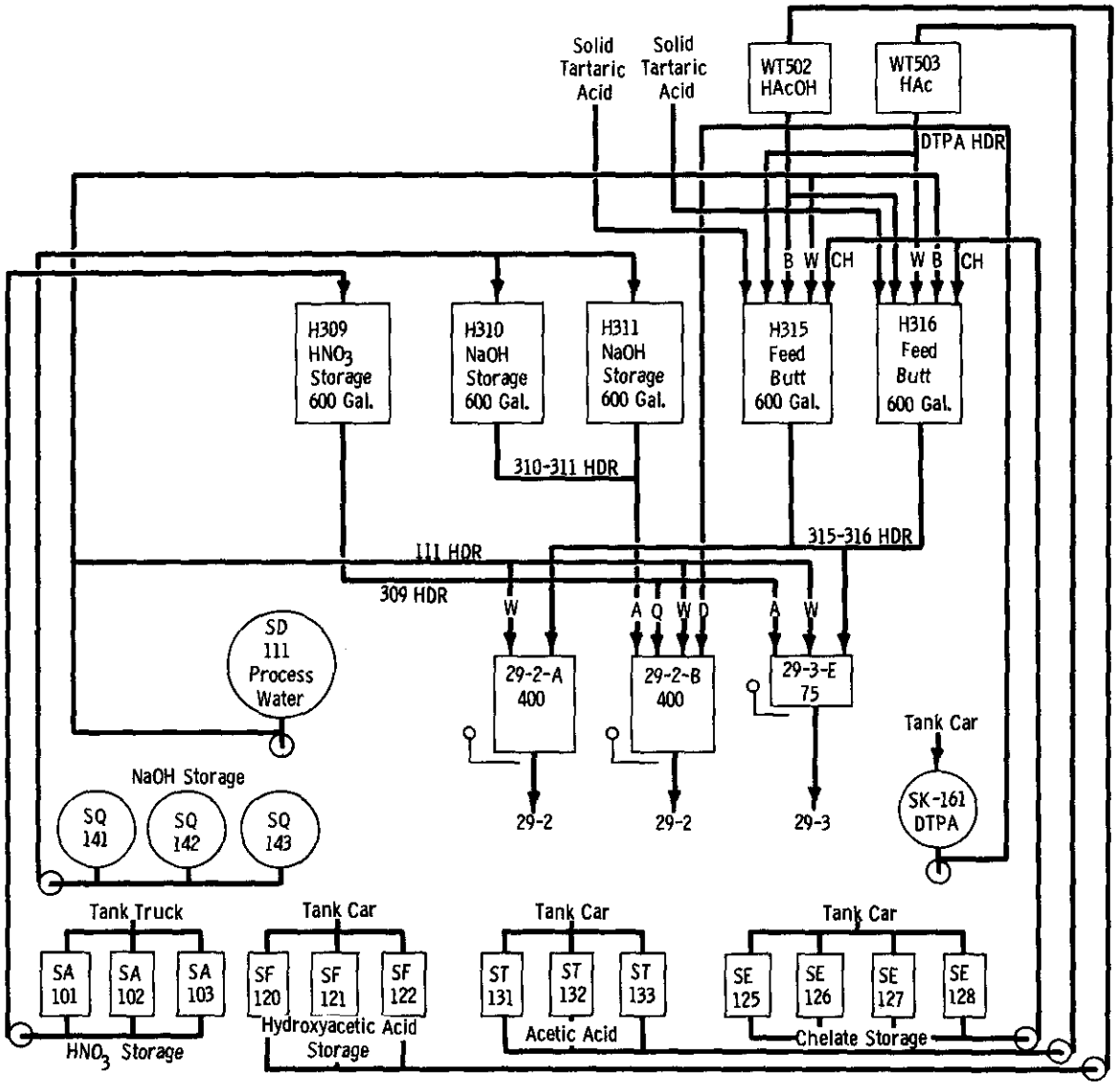

FIGURE IV-3

Flow Diagram for Process Solutions Required for Solvent Extraction Feed Make-Up

5. Solvent Extraction Processes

5.1 Purex Acid Waste, Zirflex Acid Waste, and Purex Acid Sludge Waste

In the solvent extraction process for PAW, ZAW, and PAS, strontium and the rare earths are extracted into the organic phase in the IA column and impurities are scrubbed from the organic phase in the IS column. Strontium is selectively stripped from the organic phase in the IB column.

When processing PAW and ZAW the IC column is used to separate cerium and the rare earths. The rare earths are purified further by a batch extraction and strip in process tank 26-2, while cerium is stripped from the organic phase in process tank 27-3.

When PAS is being processed it is not necessary to separate cerium from the rare earths as the cerium has decayed to low levels. Therefore, the IC column is used to get additional decontamination from calcium by selectively stripping calcium from the organic phase. The rare earths are stripped from the organic phase by batch contact in process tank 27-3.

A flow diagram for the process solutions required for the solvent extraction processing of PAW, ZAW, and PAS is shown in Figure IV-4. The composition of the process streams and the tanks in which they are made up is shown in Table VI-16 on page 628.

The organic IAX-Butt is made up in the organic make-up tank MO-154 located in the organic building, 276-B. The hydrocarbon diluent is pumped from underground storage tanks SO-151 and SO-152, and D2EHPA and TBP are pumped from storage tanks 0-201 and 0-202 as needed. The IAX Butt may vary somewhat depending on what is needed to adjust the solvent to the required composition. From MO-154, the IAX Butt is pumped to process tanks 28-3, the IAX make-up tank, or 26-2, the promethium batch contactor tank as needed.

The ISS-Butt is made up in tanks H-301 and H-402 with hydroxyacetic acid from weigh tank H-502, sodium hydroxide from head tank H-301-1 or H-402-1 and chelating agent, if required, from the chelate header (HEDTA Header). From the make-up tanks, the ISS-Butt is dropped to scale tank 29-1-F located in the operating gallery. From 29-1-F the ISS-Butt is pumped to a blend tee where it is diluted to ISS composition with process water from the 111 Header and is delivered directly to the IS column.

IBX-Butt is also made up more concentrated than IBX composition. It is made up in tank H-312 with water from the 111 Header, and nitric acid from weigh tank H-501. From H-312 the IBX-Butt is dropped to scale tank 28-1-F located in the operating gallery and from there it is pumped to a blend tee where it is diluted to IBX composition with water from the 111 Header and is delivered directly to the IB column.

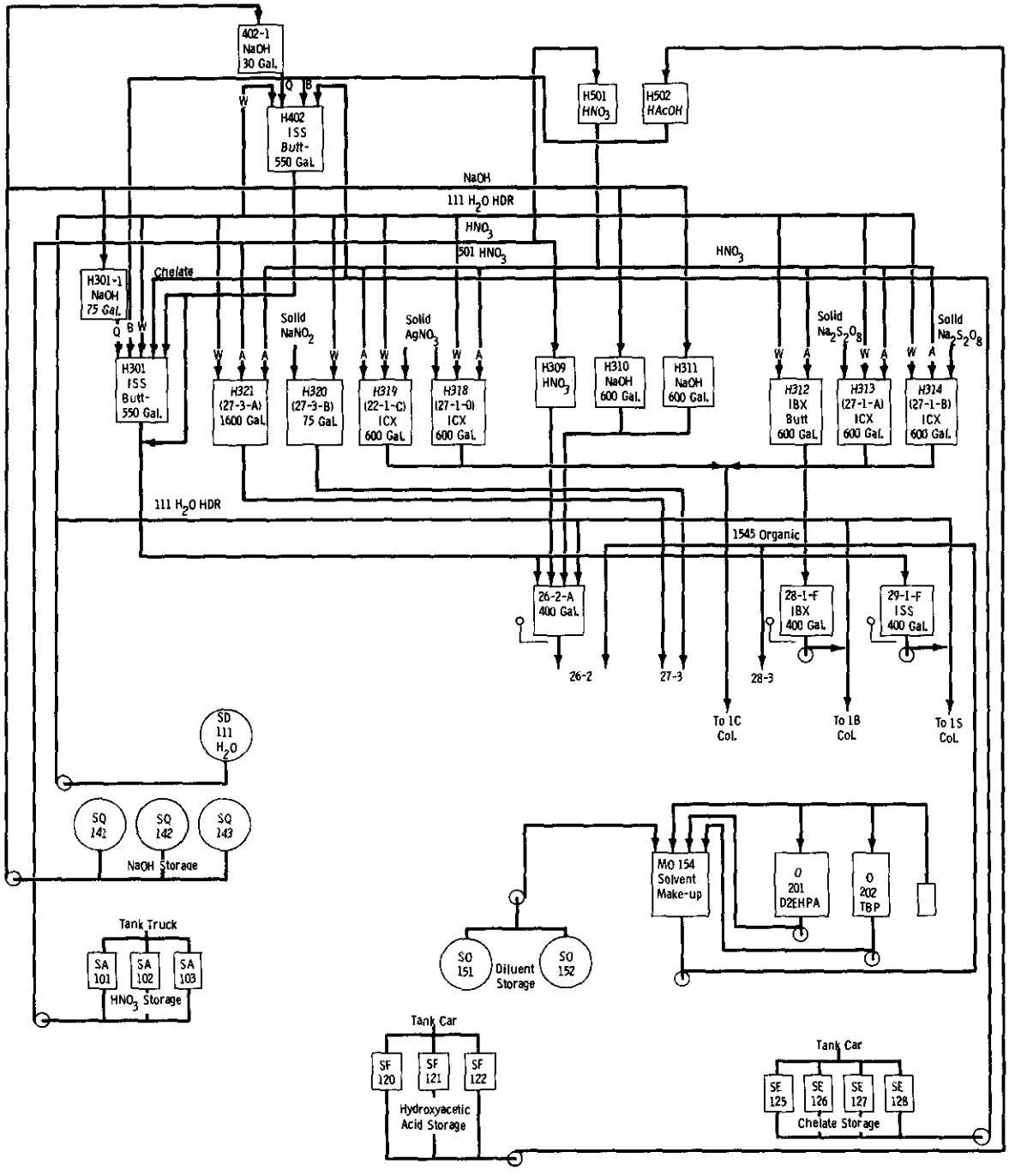

FIGURE VI-4

Flow Diagram for Process Solutions Required for Solvent Extraction Processing PAW, ZAW, and PAS

TABLE VI-16

PROCESS SOLUTIONS REQUIRED FOR SOLVENT EXTRACTION PROCESSES

Process Stream	Make-up Tank	Composition
	PAW-ZAW	
1AX butt 1CS butt	MO-154	0.3M D2EHPA, 0.2M TBP, hydrocarbon diluent*
1SS butt	H301 and H302	2.5M HAcOH, 0.1M NaOH, 0.2M Na_3HEDTA, pH 1.8
1BX butt	H312	1.0M HNO_3
1CX-1	H313 and H314 (27-1-A and 27-1-B)	2.0M HNO_3, 0.53M $Na_2S_2O_8$
1CX-2	H318 and H319 (27-1-C and 27-1-D)	2.0M HNO_3, 0.02M $AgNO_3$
Cerium Strip(a)	H321 (27-3-A)	2.1M HNO_3
Cerium Strip(b)	H320 (27-3-B)	3M $NaNO_2$
Rare Earth Purification		
pH adjust	26-2-A	3.6M NaOH, 0.12M HAcOH
Extractant	MO-154	0.3M D2EHPA, 0.2M TBP, hydrocarbon diluent*
RE Strip	26-2-A	1.0M HNO_3
	PAS	
1AX butt	MO-154	0.3M D2EHPA, 0.2M TBP, hydrocarbon diluent*
1SS butt	H301 and H302	2.5M HAcOH, 0.15M NaOH, pH 1.8
1BX butt	H312	1.0M HNO_3
1CX	H313, H314, H318, and H319	0.2M HNO_3
RE Strip	H321	2M HNO_3

* Nominal composition; may vary depending on requirements.

Two ICX solutions are made up when either PAW or ZAW is being processed. ICX-1 is made up in H-313 and H-314 with water from the 111 Header, nitric acid from weigh tank 501, and solid sodium persulfate. ICX-2 is made up in H-318 and H-319 with water from the 111 Header, nitric acid from weigh tank H-501, and solid silver nitrate. ICX-1 and ICX-2 are blended together at a blending tee and delivered to the IC column. When sludge waste is being processed, the ICX stream is 0.2 M HNO_3 and contains no silver or persulfate. The dilute acid used as ICX when sludge waste is being processed is made up in the same make-up tanks that the silver and persulfate ICS solutions are made up in and delivered to the IC column through the same routing.

When current acid waste is being processed cerium is stripped from the organic phase by a batch process. The strip solution, Ce-Strip (a), is made up in H-321 with nitric acid either from weigh tank H-501 or directly from the nitric acid header and water from the 111 Header. A second strip, Ce-Strip (b), is made up in tank H-320 with water from 111 Header and solid sodium nitrite. Both cerium strip solutions are dropped by gravity directly to process tank 27-3. When sludge waste is being processed, the rare earth strip is made up in H-321 with acid from weigh tank H-501 or from the nitric acid header, and water from the 111 Header. The rare earth strip is also dropped by gravity directly to process tank 27-3.

Aqueous solutions for the rare earth purification (sulfate removal) step, which is a batch process, are made up in scale tank 26-2-A located in the operating gallery. For pH adjust, the hydroxyacetic acid is obtained from the 301 header which contains ISS-Butt solution, additional caustic is obtained from the 310-311 Header, and water is obtained from the 111 Header. The rare earth strip solution is also made up in scale tank 26-2-A with nitric acid from the 309 Header and water from the 111 Header.

5.2 Strontium Purification Process

Periodically the crude strontium fraction is purified in the solvent extraction equipment to prepare feed material for the fission product program. The strontium is extracted into the organic phase in the IA column, certain impurities are scrubbed from the organic phase in the IS column, and the strontium is stripped from the organic phase in the IC column. Stripping is done at a pH which provides for a separation of strontium from calcium. A flow diagram for the process solutions required for strontium purification is shown in Figure VI-5, and the composition of the process streams is shown in the following table.

TABLE VI-17

PROCESS SOLUTIONS REQUIRED FOR THE SOLVENT EXTRACTION PURIFICATION OF STRONTIUM

Process Stream	Make-up Tank	Composition
1AX Butt	MO154	0.3M D2EHPA, 0.2M TBP, hydrocarbon diluent*
1SS Butt	H301	2.1M Citric acid, 0.6M Na_5DTPA
1BX Butt	H312	3M Citric acid
Citrate Kill	H305	3.7M H_2O_2
Acid Butt	H305	12.2M HNO_3

* Nominal composition; may vary depending on requirement.

The IAX-Butt for strontium purification is made up in the same way as it is for the other solvent extraction processes. (See Section E 5.1 above.)

The ISS-Butt is made up in Tank H-301 with water from the 111 Header, solid citric acid, and DTPA pumped in from the DTPA storage tank in the 211-B tank farm. The ISS-Butt is dropped to scale tank 29-1-F located in the operating gallery from where it is pumped to a

blending tee where it is blended with proper proportion of water to ISS concentration, and delivered to the IS column.

The IBX Butt is made up in tank H-312 with water from the 111 Header, and solid citric acid. The IBX-Butt is dropped to scale tank 28-1-F in the operating gallery from where it is pumped to a blend tee, mixed with the proper proportion of water, and delivered to the IB column.

The hydrogen peroxide used to destroy the citric acid in the strontium product concentrator, and the nitric acid needed to maintain the acidity of the strontium product are added from Utility Make-Up tank H-305, through scale tank 5-2-F to strontium concentrator E-5-2.

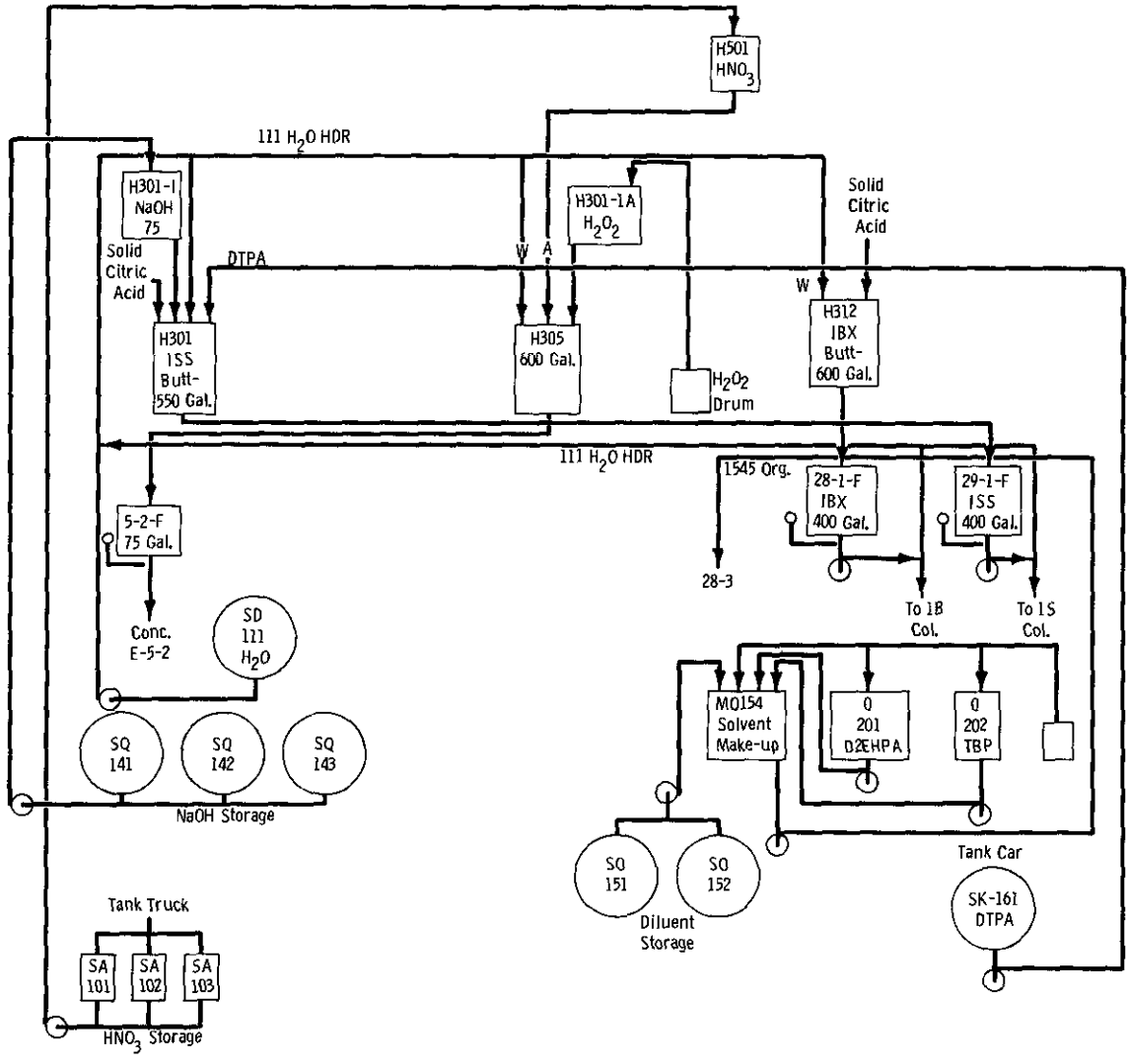

FIGURE VI-5

Flow Diagram for Process Solutions Required for the Solvent Extraction Processing for Purifying Strontium

6. Solvent Treatment

The organic solvent used in the solvent extraction processes, both column and batch, must be treated to remove metal contaminates and solvent degradation products. An effective method of treating the solvent is to wash the solvent with a sodium hydroxide solution containing a complexing agent such as citrate. A flow diagram for the process solutions required for treating solvent is shown in Figure VI-6 and the composition of the solutions is shown in the following table:

TABLE VI-18

PROCESS SOLUTIONS REQUIRED FOR SOLVENT TREATMENT

Process Stream	Make-up Tank	Composition
1OS	26-1-A	2.5M NaOH, 0.1M Na_3Citrate
1CX (alternate during Sr Purification)	H313 and H314	2.5M NaOH, 0.1M Na_3Citrate
1AX acid butt	28-3-C	12.2M HNO_3

The solvent wash solution, IOS, is made up in scale tank 26-1-A located in the operating gallery. Citric acid is available from the 302 Header, water from the 111 Header, and sodium hydroxide from the 310-311 Header. During strontium purification the IC column can be used to wash the solvent. If this mode of operation is used the solvent wash is made up in H-313 and H-314 with solid citric acid, sodium hydroxide from the caustic header, and water from the 111 Header.

After washing with caustic the solvent is transferred to process tank 38-3 where it is converted to the acid form by butting with nitric acid. The nitric acid butt is added from scale tank 28-3-C located in the operating gallery.

7. Ion Exchange Process for the Recovery of Cesium

Cesium present in the stored alkaline supernatant solutions is absorbed on a synthetic ion exchange medium. Sodium is washed from the ion exchange medium with a dilute solution of ammonium carbonate and ammonium hydroxide. The cesium is subsequently eluted from the ion exchange medium with a concentrated solution of ammonium carbonate and ammonium hydroxide. Flowsheets for the recovery of cesium are shown in Figures IV-72 and IV-73, Chapter IV. Ammonium carbonate-ammonium hydroxide solutions are made by absorbing anhydrous ammonia gas and carbon dioxide gas in water. Approximately 90 per cent of the ammonium carbonate-ammonium hydroxide eluent is recovered and recycled. A flow diagram for the process chemicals required for ion exchange processing for the recovery of cesium is shown in Figure VI-7 and the composition of the streams is shown in Table VI-19 on page 633.

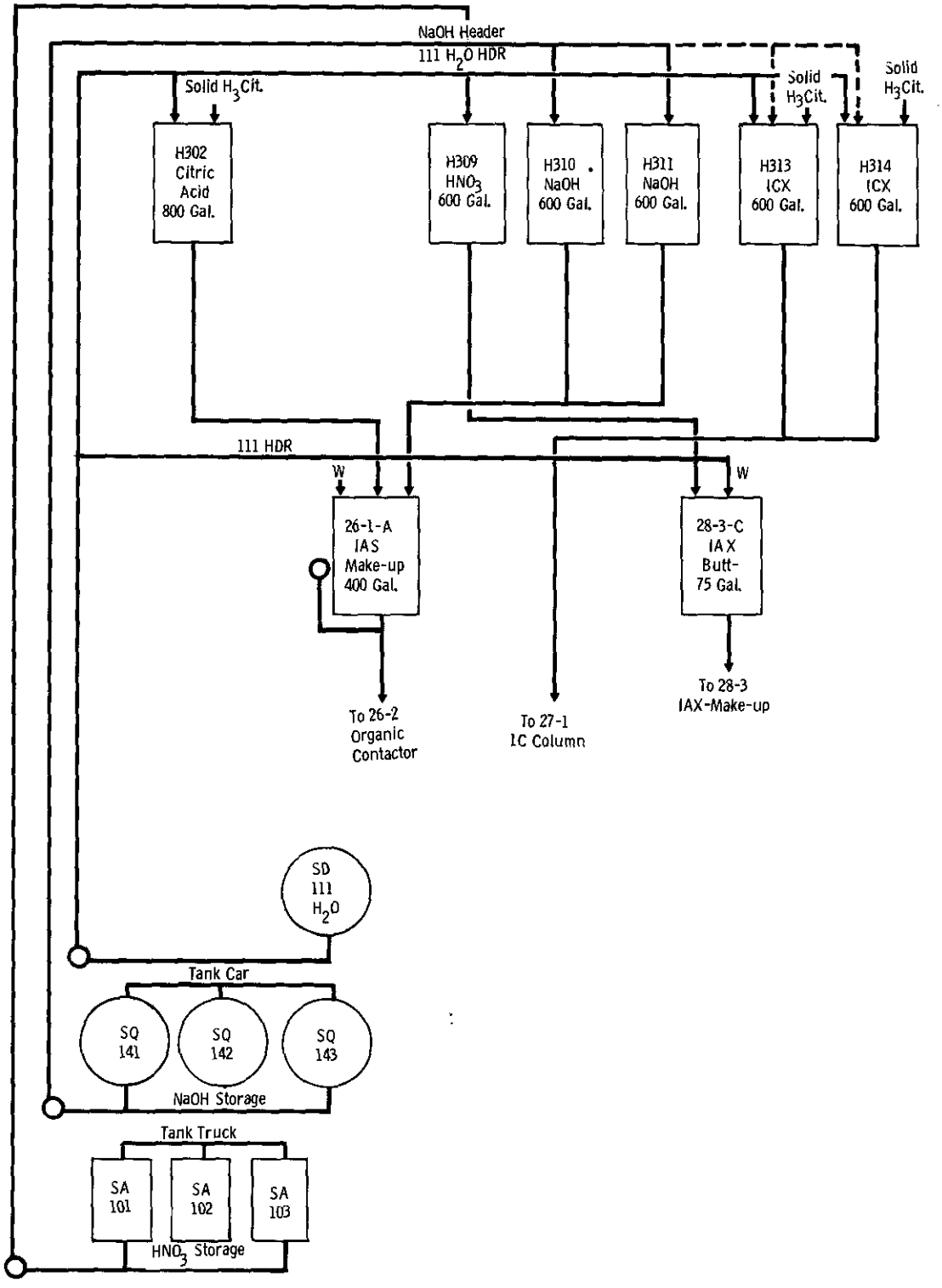

FIGURE VI-6

Flow Diagram for Process Solutions Required for Solvent Treatment

TABLE VI-19

PROCESS SOLUTIONS REQUIRED FOR THE ION EXCHANGE PROCESS

Process Stream	Make-up Tank	Composition
Bed Make-up	H317	Zeolite AW-500 and water
Na Eluent	MNB173	0.2M $(NH_4)_2CO_3$, 0.1M NH_4OH
Cesium Eluent	TK-21-1	2M $(NH_4)_2CO_3$, 2M NH_4OH
Column Wash #2 (S and SX supernates only)	18-3-S	19M NaOH

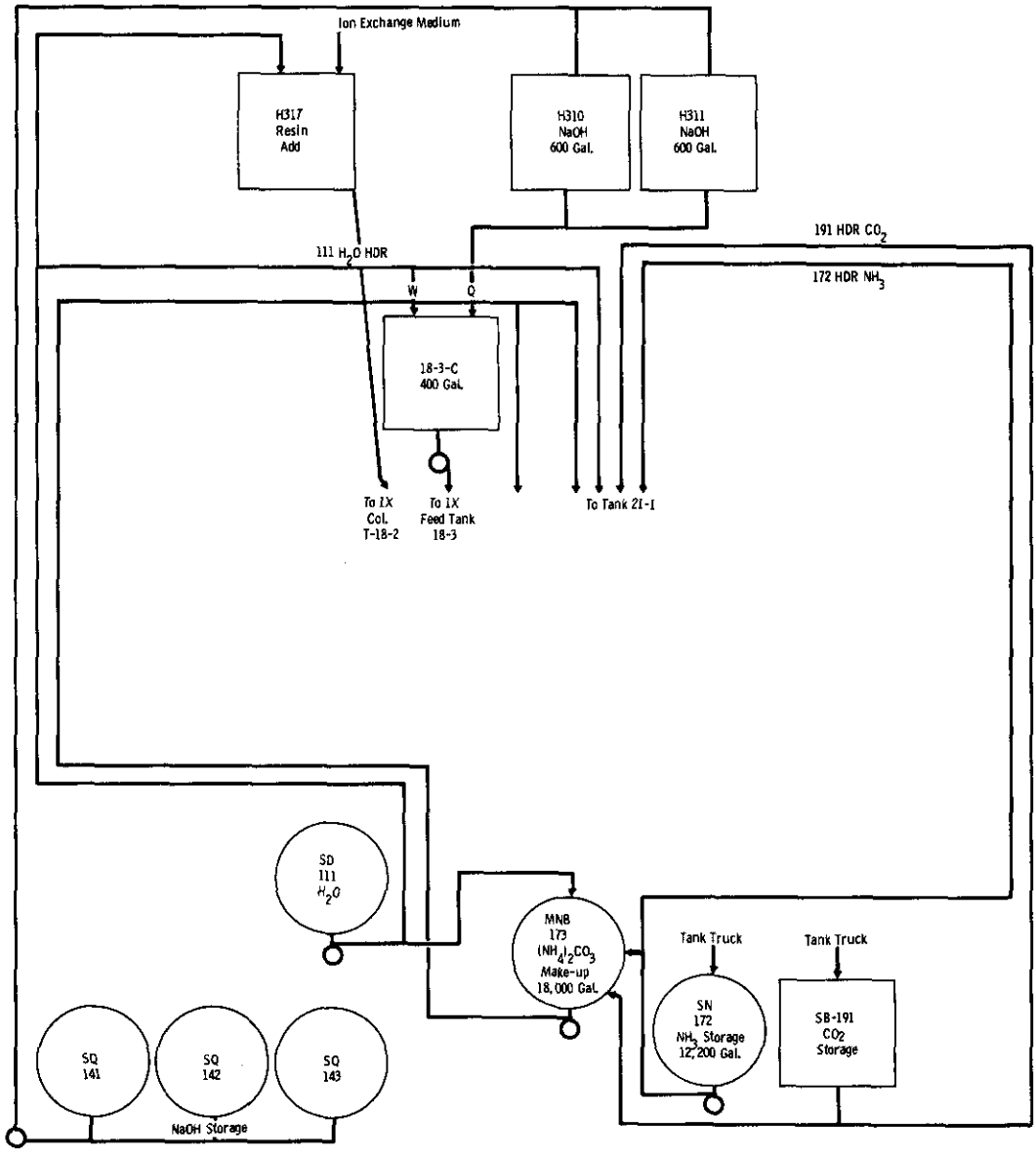

FIGURE VI-7

Flow Diagram for Process Solutions Required for The Ion Exchange Process for Recovering Cesium

The ion exchange medium for the bed make-up is slurried directly into the ion exchange column from Tank H-317. The ion exchange medium is a solid material, and water is obtained from the 111 Header.

The sodium eluent is made up in Tank MNB-173, which is located in the 211-B Chemical tank farm, by absorbing ammonia gas and carbon dioxide gas in water. Demineralized water from the 111 Header is used. The ammonia comes from the anhydrous ammonia storage tank SN-172, and the carbon dioxide comes from the CO_2 storage SB-191. From make-up tank MNB-173 the sodium eluent solution is pumped to the ion exchange feed tank 18-3.

Cesium eluent is recovered in process tank 21-1. Additional eluent is made up in tank 21-1 by absorbing ammonia gas from the 172 Header, and carbon dioxide gas from the 191 header in water in tank 21-1. Alternately, additional cesium eluent could be made up in tank MNB-173 by absorbing ammonia and carbon dioxide in water, and pumping the resulting solution to tank 21-1.

When S and SX supernates are processed, the ion exchange column is washed with 1 M NaOH following cesium elution step to remove any aluminum which may have precipitated in the ion exchange bed. The sodium hydroxide solution is made by pumping 19 M NaOH from scale tank 18-3-C to a blending tee where it is diluted with process water from the 111 Header and delivered to the IX column. The 19 M NaOH is obtained from the 310-311 Header.

8. Waste Treatment

High level wastes are collected in process tanks 25-1 and 25-2 where they are neutralized with sodium hydroxide. Low level wastes are collected in tank 24-1, the feed tank for the low level waste concentrator, where sodium hydroxide can be added if needed to neutralize the waste before it is concentrated. A flow diagram for the sodium hydroxide additions to the waste handling facilities is shown in Figure VI-8.

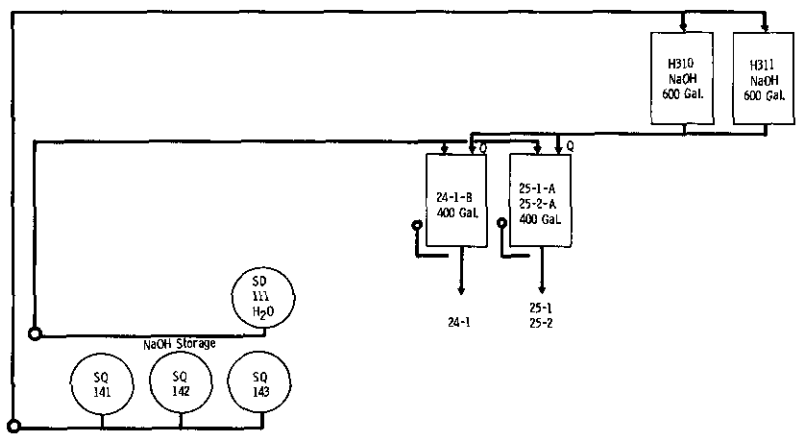

FIGURE VI-8

Flow Diagram for Caustic Addition to Waste Handling Facilities

REFERENCES

Caudill, H. L., et al, Design Criteria 221-B Waste Fractionization Phase III Waste Management Program. HW-81802 Pt 1 (Secret) May 15, 1964.

Caudill, H. L., Design Criteria Facilities for Coupling the Waste Management and Fission Products Conversion and Encapsulation Programs. ISO-144, March 11, 1966.

Rathvon, H. C. and P. W. Smith, Waste Management Program Process Flowsheets, HW-78061 (Secret) July 8, 1963.

Ritter, G. L., Process Flowsheet for Continuous Separation of Cesium from Promethium at B-Plant. ISO-42 (Secret) January 13, 1966.

Buckingham, J. S., Essential Materials Requirements for B-Plant Phase III, RL-SEP-878, Dec. 1, 1965.

Buckingham, J. S., Letter to O. V. Smiset, Isochem Inc: Process Test of Litharge (PbO) as a Replacement for Lead Nitrate in the Iron and Aluminum Removal Step, Nov. 7, 1966.

Graves Water Conditioning Co., Demineralizer Equipment BPF-4700, 1953

Research and Engineering Section, CPD, Chemical Processing Division Essential Materials Manual, ISO-78, July 1, 1966.

LIST OF TABLES AND FIGURES

		Page
Table VI-1	Aqueous and Organic Process Streams for Processing Current Waste	604
Table VI-2	Aqueous and Organic Process Streams for Processing Zirflex Acid Waste	605
Table VI-3	Aqueous and Organic Process Streams for Processing Acidified Sludge Waste	607
Table VI-4	Aqueous and Organic Process Streams for Purifying Crude Strontium	608
Table VI-5	Aqueous Process Streams for Processing Stored Supernatant Waste	608
Table VI-6	Potential Sources of Alkaline Earth Impurities In Strontium Product From Processing One Ton of Uranium	609
Table VI-7	Essential Materials for Waste Fractionization	610
Table VI-8	Essential Materials Required for Processing Current Acid Waste	611
Table VI-9	Essential Materials Required for Processing Stored Sludge Waste	612
Table VI-10	Essential Materials Required for Processing Supernatant Waste	613
Table VI-11	Essential Materials Required for Purifying Strontium Recovered from Current Waste	614
Table VI-12	Essential Materials Required for Purifying Strontium Recovered from Stored Waste	614
Table VI-13	Process Solutions Required for Leaching Current Acid Wastes	620
Figure VI-1	Flow Diagram for Process Solutions Required for Leaching Purex Acid Waste	621
Table VI-14	Process Solutions Required for the Precipitation Process	622
Figure VI-2	Flow Diagram for Process Solutions Required for the Precipitation Process	623
Table VI-15	Process Solutions Required for Solvent Extraction Feed Make-up	624
Figure VI-3	Flow Diagram for Process Solutions Required for Solvent Extraction Feed Make-up	625
Figure VI-4	Flow Diagram for Process Solutions Required for Solvent Extraction Processing PAW, ZAW, and PAS	627
Table VI-16	Process Solutions Required for Solvent Extraction Processes	628
Table VI-17	Process Solutions Required for the Solvent Extraction Purification of Strontium	629
Figure VI-5	Flow Diagram for Process Solutions Required for Solvent Extraction Processing for Purifying Strontium	630
Table VI-18	Process Solutions for Solvent Treatment	631
Figure VI-6	Flow Diagram for Process Solutions Required for Solvent Treatment	632
Table VI-19	Process Solutions Required for the Ion Exchange Process	633
Figure VI-7	Flow Diagram for Process Solutions Required for the Ion Exchange Process for Recovering Cesium	633
Figure VI-8	Flow Diagram for Caustic Addition to Waste Handling Facilities	634

APPENDIX A

PURCHASE SPECIFICATIONS FOR B-PLANT ESSENTIAL MATERIALS

Material and Number Test	Specification	Sample Frequency
Acetic Acid, 064		
Assay	min 80 Wt. %	each shipment
Residue	max 0.01 Wt. %	each shipment
Chloride	max 0.01 Wt. %	each shipment
Ammonia, anhydrous, technical liquefied	min 99.5 vol. %	on request
Carbon dioxide, compressed gas, commercial grade, 0270	min 99.5 vol. %	on request
Citric Acid, 285		
Acidity as citric acid	min 99.5 Wt. %	each shipment
Residue	max 0.01 Wt. %	each shipment
Chloride	max 0.01 Wt. %	each shipment
Phosphate	max 0.001 Wt. %	each shipment
DTPA (sodium salt), 705	min 40 Wt. %	
SpGr 25/25	min 1.30	each shipment
pH	11 to 14	each shipment
$CaCO_3$ Value	80 ± 2	each shipment
Sr	max 100 ppm	on request
Ca	max 300 ppm	on request
Mg	max 400 ppm	on request
D2EHPA, 384		
Acidity as D2EHPA	min 95 - max 100 %	each shipment
SpGr 20/20	0.970 to 0.984	each shipment
Refractive Index	$N^{20}D$ 1.443	
Solubility in water	max 0.01 Wt. % 20C	
Water Content	max 2.4 Wt. % 20C	
Flash Point	385 C	
HEDTA (sodium salt), 668	min 40 Wt. %	
SpGr 25/25	min 1.28	each shipment
pH	11 to 14	each shipment
$CaCO_3$ Value	120 ± 5	each shipment
Sr	max 2 ppm	on request
Ca	max 10 ppm	on request
Mg	max 10 ppm	on request
Hydrogen Peroxide, 526		
Assay	12 to 15 Wt. %	each shipment
Fe	max 0.5 ppm	each shipment
Residue	max 0.01 Wt. %	each shipment
Sr	max 10 ppm	on request
Ca	max 10 ppm	on request
Mg	max 10 ppm	on request

Hydroxyacetic Acid, 524		
Acidity as glycolic acid	min 70 Wt. %	each shipment
Chloride	max 0.2 Wt. %	each shipment
Residue	max 0.1 Wt. %	each shipment
Sr	max 1 ppm	each shipment
Ca	max 10 ppm	on request
Mg	max 2 ppm	on request
Lead Nitrate, 576		
Pb	min 62 Wt. %	on request
Chloride	max 0.01 Wt. %	on request
Sr	max 50 ppm	each shipment
Ca	max 50 ppm	each shipment
Mg	max 10 ppm	each shipment
Mn	max 50 ppm	each shipment
Nitric Acid, 0670		
Acidity as HNO_3	min 57 Wt. %	each composite*
Chloride	max 0.05 Wt. %	each composite*
Residue	max 0.01 Wt. %	each composite*
Sr	max 0.2 ppm	one per month
Ca	max 2 ppm	one per month
Mg	max 1 ppm	one per month
Phosphate	max 0.003 Wt. %	one per month
n-paraffin hydrocarbon, 669	min 97 Wt. %	
Source	South Hampton Co.	
B. P.	min 99 Wt. % in the C-10 to C-14 range	on request
Flash Point	155 to 160 F	
SpGr 60/60 F	0.74 to 0.76	each shipment
Viscosity	max 2.5 n/100 25 C	each shipment
Aromatics	max 0.2 Wt. %	each shipment
Olefins	max 0.5 Bromine No.	each shipment
Silver Nitrate, 775		
Assay	min 99.8 Wt. %	on request
Chloride	max 0.002 Wt. %	on request
Sodium Bisulfate, Hydrated		
Acidity as H_2SO_4	34.5 to 36.5 Wt. %	each shipment
Chloride	max 0.1 Wt. %	each shipment
Sr	max 2 ppm	each shipment
Ca	max 10 ppm	each shipment
Mg	max 10 ppm	each shipment
Sodium Carbonate, 785		
Na_2O	min 57.3 Wt. %	on request
Water Insoluble	max 0.1 Wt. %	each shipment
Sr	max 10 ppm	each shipment
Ca	max 30 ppm	each shipment
Mg	max 20 ppm	each shipment

* Composite of samples from 10 truck loads.

Sodium Hydroxide, 0800		
Na_2O	38.9±1 Wt. %	each shipment
Chloride	max 0.9 Wt. %	each shipment
Sr	max 20 ppm	each shipment
Ca	max 40 ppm	each shipment
Mg	max 10 ppm	each shipment
Sodium Nitrite, 810		
Assay	min 99 Wt. %	each shipment
Water Insoluble	max 0.05 Wt. %	each shipment
Sodium Persulfate, 752		
Assay	min 97 Wt. %	each shipment
Chloride	max 0.01 Wt. %	each shipment
Water Insoluble	max 0.01 Wt. %	each shipment
Sugar, 842		
Sugar Content	min 99.5 Wt. %	on request
Residue	max 0.01 Wt. %	on request
Water Insoluble	Max 0.01 Wt. %	each shipment
Tartaric Acid, 0910		
Acidity as Tartaric Acid	min 99.4 Wt. %	each shipment
Chloride	max 0.01 Wt. %	each shipment
Residue	max 0.02 Wt. %	each shipment
Tributyl Phosphate, 0920		
Butanol	max 0.05 Wt. %	each shipment
Acidity	max 0.02N	each shipment
Suspended Solids	max 0.01 Wt. %	each shipment
SpGr 20/20	0.973 to 0.983	each shipment
Turbidity	to pass test	each shipment
Zeolite Ion Exchanger	AW-500, Linde Division of Union Carbide	

APPENDIX B

WATER DEMINERALIZER REGENERATION PROCEDURE

Cation (Hydrogen) Unit

1. Backwash at 55 gpm for 22 minutes.

2. Treat ion exchange bed with 2 percent H_2SO_4 for 27 minutes by adjusting flows to give 5.5 gpm 20% H_2SO_4 and 55.5 gpm water.

3. Treat bed for 9 minutes with 5 percent H_2SO_4 by adjusting flows to give 16 gpm 20% H_2SO_4 and 56 gpm water.

4. Displace acid with 56 gpm water for 14 minutes.

5. Rinse bed with 70 gpm water for 70 minutes.

Anion Unit

1. Backwash at 20 gpm for 10 minutes.

2. Treat ion exchange bed with 2 percent NaOH by adjusting flows to give 7 gpm 10% NaOH and 24 gpm water for 30 minutes.

3. Displace caustic with 24 gpm water for 8 minutes.

4. Rinse bed with 60 gpm water for 60 minutes.

WASTE MANAGEMENT TECHNICAL MANUAL

PART IV: B-PLANT PRODUCT AND WASTE HANDLING

CHAPTER VII

ISOTOPE STORAGE

by

K. H. HAMMILL
Vitro/Hanford Engineering Services

Page

A. Introduction 701

B. Strontium 701

C. Cesium 710

D. Storage of Strontium and Cesium 710

E. Radiolysis of Aqueous Solutions 712

F. Future Isotope Separation 713

G. Appendix 714

H. References 718

CHAPTER VII

ISOTOPE STORAGE

A. INTRODUCTION

When the wastes are first released from the Purex Plant as PAW (Purex Acid Waste), the majority of the thermal head released during radioactive decay is associated with the short half-life isotopes. The total amount of heat released decreases rapidly as the quantities of these short half-life isotopes decrease; hence, the percentage of heat released by specific isotopes changes over a period of time due to differences in their half-lives. As an illustration, the isotopes of strontium and cesium contribute less than 20 percent of the total heat liberated by beta decay when the waste is released from the Purex plant; but after ten years these two isotopes contribute 95 percent of the heat associated with beta decay. Likewise, the gamma watts liberated by cesium when the waste is released from the Purex plant is approximately one percent; however, after ten years' time, practically all of the thermal watts associated with gamma decay is from cesium. The continuous release of heat over an extended period from these isotopes requires their separation from the rest of the waste before solidification can be effected. The separation of strontium and cesium (assuming 10-year decay) will allow the remainder of the wastes to be safely solidified.

If the heat liberated from strontium 89 is considered with the other short half-life isotopes, strontium 90 and cesium 137 contribute less than 2 percent of the total beta watts present in Purex Acid Waste.

B. STRONTIUM

Two isotopes of strontium have to be removed from current wastes because of the amount of thermal energy released. Strontium-90 has a half-life of twenty-eight years. It is a pure beta emitter; its daughter yttrium-90 emits a 0.2 and 1.7 Mev Gamma. See Reference 1. Since the half-life of the daughter is 64.2 hours, the emission of these gammas reaches a maximum and is then in equilibrium with the parent. Together, strontium-90 and yttrium-90 produce 6.8 thermal watts of energy per kilocurie of strontium-90 which is 23.2 BTU/hr per kilocurie. Strontium-89 has a half-life of 50.4 days and produces 3.4 thermal watts or 12 BTU/hr per kilocurie. Since the ratio of

B. STRONTIUM (Continued)

strontium-89 to strontium-90 is about ten to one in fresh Purex acid waste, most of the heat liberated from these isotopes is from strontium-89.

After a year of storage, the strontium-89 has decayed to an insignificant amount with respect to strontium-90; consequently, the amount of heat liberated by the strontium isotopes is reduced by a factor of approximately five. Storage of strontium isotopes is limited by the heat-removing capabilities of the tank cooling system.

Tanks for storage of strontium-89 and -90 mixture separated from fresh PAW must have coils of sufficient cooling capacity to absorb the total heat released from both isotopes.

During a campaign to separate a mixture of strontium-89 and -90 from PAW with the concentrate being stored in Tank 6-1 or 6-2, each day of processing adds a given quantity of concentrate to the storage tank resulting in continuously changing amounts of heat liberated from the mixture. The strontium-90 isotope, with a long half-life, continuously produces a constant amount of heat per unit volume and this rate of heat release is a function of the quantity of Sr^{90} present. The heat produced by a unit volume of strontium-89, with a half-life of 50.4 days, varies with time in storage. To calculate the curies or heat released from strontium-89 solutions accumulated in the storage tanks versus time, the following is presented.

The constant λ is known as the decay constant. Since the half-life of Sr^{89} is known to be 50.4 days, the value of λ can be derived from the exponential law $A = A_0 e^{-\lambda t}$ in terms of $t_{1/2}$. See Reference 1.

$$\ln \tfrac{1}{2} = -\lambda t_{\frac{1}{2}}$$

or

$$\lambda = \frac{\ln 2}{t_{\frac{1}{2}}} = \frac{0.69315}{50.4} = 0.0138$$

Assuming a constant amount of PAW is being processed for strontium each day, the exponential law can be expanded to

$$(1) \quad A_{n+1} = A_n e^{-\lambda h} + IRh \quad (Sr^{89} \text{ only})$$

where A_n is the number of curies in the tank at the beginning of the nth day, $A_n e^{-\lambda h}$ is the curies remaining from A_n due to radioactive decay, IRh is the curies added during the nth day, and h is a one-day step in time. Since there are no curies in the tank at the start of the first day, $A_0 = 0$.

Since h = 1, equation (1) can be written as:

$$(2) \quad A_{n+1} = A_n e^{-\lambda} + IR$$

When the decay of the Sr^{89} per day equals the amount added, the system will be in equilibrium and

$$A_n = A_{n+1}$$

and

$$A = Ae^{-\lambda} + IR$$

or

$$A(1-e^{-\lambda}) = IR$$

thus

$$(3) \quad A_{equilibrium} = \frac{IR}{1-e^{-\lambda}} = \frac{IR}{1-e^{-\frac{0.69315}{50.4}}} = \frac{IR}{1-e^{-0.0138}}$$

For the desired tabular results on any day, the number of curies in the tank for n = 1, 2, 3, ... is

$$A_1 = 0e^{-\lambda} + IR = IR$$

$$A_2 = A_1 e^{-\lambda} + IR$$

$$A_3 = A_2 e^{-\lambda} + IR$$

$$A_{n+1} = A_n e^{-\lambda} + IR$$

Equation (3) is a linear, first order difference equation with constant coefficients, and therefore solved

$$(4) \quad A_n = \left[\frac{IR}{1-e^{-\lambda}} \right] \left[1-e^{-n\lambda} \right]$$

let A_e = A equilibrium = $\frac{IR}{1-e^{-\lambda}}$ then the following can be deduced

$$(a) \quad A_0 = A_e\,(1-e^{-0\lambda}) = 0$$

$$(b) \quad A_{25} = A_e \left(1-e^{-[\frac{\ln 2}{50.4}]25} \right) \approx A_e \left(1-\frac{\sqrt{2}}{2} \right) \approx 0.293\ Ae$$

$$(c) \quad A_{50} = Ae\ (\ 1-e^{-[\frac{\ln 2}{50.4}]50}\ ) \approx A_e\ (\ 1-.5\ ) \approx 1/2\ A_e$$

(In 50 days one half the equilibrium curies are contained in the storage tank)

B. STRONTIUM (Continued)

(d) $A_{100} = A_e \left(1-e^{-(\frac{\ln 2}{50.4})100} \right) \approx A_e \left(1-\frac{1}{4}\right) \approx 3/4\ A_e$

(e) $A_{150} = 7/8\ A_e$

(d) $A_{200} = \frac{15}{16} A_e$, etc.

Tables VII-1 through VII-5 and Figures VII-1 through VII-5 are based on input rates of strontium-89 between $2x10^5$ and $1x10^6$ curies per day, the associated amount of strontium-90 being one-tenth the quantity of the lighter isotope. The calculations are based on a 100-day process cycle with the isotopic mixture assumed to be constant during the separation from the other fission products.

The total heat introduced in the storage tank during the first day of processing is approximately 83 percent from strontium-89 and about 17 percent from strontium-90. However, at the end of the processing cycle (the 100th day), strontium-89 contributes approximately 72 percent of the heat, and 28 percent by strontium-90. This is apparent by observing Figures VII-1 through VII-5 because the curve for the BTU/hr liberated by strontium-90 is nearly linear; but the curve for strontium-89 (half-life of 50.4 days) slowly approaches equilibrium, i.e., the maximum heat is liberated at a given input rate.

In actual processing, PAW is accumulated in the 244 AR Vault, and the strontium-89 concentration is not constant as assumed in the calculations. In addition, a one-hundred-day processing campaign may not be attained. However, this length of time was selected to show graphically that, over a period of time, the heat output of the strontium-90 gradually increases while heat from strontium-89 begins to level off.

Figure VII-6 is a comparison of the total heat evolved versus time from Figures VII-1 through VII-5.

Figure VII-7 depicts the resultant heat versus time curves after a campaign is completed and no additional curies of either isotope are added to the tank. The values used in Figure VII-7 were the maximum BTU/hr obtained at the 100th day from Table VII-5 and Figure VII-5. However, regardless of actual values, the shape of the curve for the total heat evolved from both isotopes will be the same provided the ratio of isotopes remains constant.

TABLE VII-1

Days	Curies Sr^{89}	BTU/hr Sr^{89}	BTU/hr Sr^{90}	BTU/hr TOTAL
5	9.73×10^5	1.07×10^4	2.32×10^3	1.30×10^4
10	1.88×10^6	2.07	4.64	2.53
15	2.73	3.00	7.00	3.70
20	3.52	3.87	9.30	4.80
25	4.26	4.68	1.16×10^4	5.85
30	4.95	5.45	1.39	6.85
35	5.59	6.15	1.62	7.78
40	6.20	6.82	1.86	8.67
45	6.76	7.43	2.09	9.52
50	7.28	8.01	2.32	1.03×10^5
55	7.77	8.55	2.55	1.11
60	8.23	9.05	2.78	1.18
65	8.65	9.52	3.02	1.25
70	9.05	9.96	3.25	1.32
75	9.42	1.04×10^5	3.48	1.38
80	9.77	1.07	3.71	1.44
85	1.01×10^7	1.11	3.94	1.50
90	1.04	1.14	4.18	1.56
95	1.07	1.17	4.41	1.61
100	1.09	1.20	4.74	1.67

Input Rate $Sr^{89} = 2.0 \times 10^5$ curies/day
$Sr^{90} = 2.0 \times 10^4$ curies/day

Calculated Equilibrium Heat Generation Rate

$Sr^{89} = 1.61 \times 10^5$ BTU/hr

TABLE VII-2

Days	Curies Sr^{89}	BTU/hr Sr^{89}	BTU/hr Sr^{90}	BTU/hr TOTAL
5	1.95×10^6	2.14×10^4	4.64×10^3	2.60×10^4
10	3.76	4.14	9.28	5.07
15	5.46	6.00	1.39×10^4	7.39
20	7.04	7.75	1.86	9.60
25	8.52	9.37	2.32	1.17×10^5
30	9.90	1.09	2.78	1.36
35	1.12×10^7	1.23	3.25	1.55
40	1.24	1.36	3.71	1.73
45	1.35	1.49	4.18	1.90
50	1.46	1.60	4.65	2.06
55	1.55	1.71	5.00	2.20
60	1.65	1.81	5.46	2.35
65	1.73	1.90	5.93	2.48
70	1.81	1.99	6.49	2.64
75	1.88	2.07	6.96	2.77
80	1.95	2.15	7.42	2.89
85	2.02	2.22	7.88	3.01
90	2.08	2.29	8.35	3.12
95	2.14	2.35	8.81	3.23
100	2.19	2.41	9.28	3.34

Input Rate $Sr^{89} = 4.0 \times 10^5$ curies/day
$Sr^{90} = 4.0 \times 10^4$ curies/day

Calculated Equilibrium Heat Generation Rate

$Sr^{89} = 3.22 \times 10^5$ BTU/hr

TABLE VII-3

Days	Curies Sr^{89}	BTU/hr Sr^{89}	BTU/hr Sr^{90}	BTU/hr TOTAL
5	2.92×10^{6}	3.21×10^{4}	6.96×10^{3}	3.91×10^{4}
10	5.64	6.21	1.39×10^{4}	7.61
15	8.19	9.01	2.09	1.11×10^{5}
20	1.06×10^{7}	1.16×10^{5}	2.78	1.44
25	1.28	1.41	3.47	1.75
30	1.48	1.63	4.17	2.05
35	1.68	1.85	4.86	2.33
40	1.86	2.04	5.56	2.60
45	2.03	2.23	6.25	2.85
50	2.18	2.40	6.94	3.10
55	2.33	2.56	7.64	3.33
60	2.47	2.71	8.34	3.55
65	2.60	2.86	9.03	3.75
70	2.72	2.99	9.72	3.96
75	2.83	3.11	1.04×10^{5}	4.11
80	2.93	3.22	1.11	4.33
85	3.03	3.33	1.18	4.51
90	3.12	3.43	1.25	4.68
95	3.20	3.52	1.32	4.84
100	3.28	3.61	1.39	5.00

Input Rate $Sr^{89} = 6 \times 10^{5}$ curies/day
$Sr^{90} = 6 \times 10^{4}$ curies/day

Calculated Equilibrium Heat Generation Rate

$Sr^{89} = 4.83 \times 10^{5}$ BTU/hr

TABLE VII-4

Days	Curies Sr^{89}	BTU/hr Sr^{89}	BTU/hr Sr^{90}	BTU/hr TOTAL
5	3.89×10^6	4.28×10^4	9.28×10^3	5.21×10^4
10	7.53	8.28	1.86×10^4	1.01×10^5
15	1.09×10^7	1.20×10^5	2.78	1.48
20	1.41	1.55	3.71	1.92
25	1.70	1.87	4.64	2.34
30	1.98	2.18	5.57	2.74
35	2.24	2.46	6.49	3.11
40	2.48	2.73	7.42	3.47
45	2.70	2.97	8.35	3.81
50	2.91	3.20	9.28	4.13
55	3.11	3.42	1.02×10^5	4.44
60	3.29	3.62	1.11	4.73
65	3.46	3.81	1.21	5.00
70	3.62	3.98	1.30	5.28
75	3.77	4.15	1.39	5.54
80	3.91	4.30	1.48	5.78
85	4.04	4.44	1.58	6.02
90	4.16	4.57	1.67	6.24
95	4.27	4.70	1.76	6.46
100	4.38	4.81	1.85	6.66

Input Rate $Sr^{89} = 8 \times 10^5$ curies/day
$Sr^{90} = 8 \times 10^4$ curies/day

Calculated Equilibrium Heat Generation Rate

$Sr^{89} = 6.44 \times 10^5$ BTU/hr

TABLE VII-5

Days	Curies Sr^{89}	BTU/hr Sr^{89}	BTU/hr Sr^{90}	BTU/hr TOTAL
5	4.87×10^6	5.35×10^4	1.16×10^4	6.51×10^4
10	9.41	1.03×10^5	2.30	1.26×10^5
15	1.36×10^7	1.50	3.50	1.85
20	1.76	1.94	4.60	2.40
25	2.13	2.34	5.80	2.92
30	2.48	2.72	7.00	3.42
35	2.80	3.08	8.10	3.89
40	3.10	3.41	9.20	4.33
45	3.38	3.72	1.04×10^5	4.76
50	3.64	4.00	1.16	5.16
55	3.89	4.27	1.28	5.55
60	4.11	4.52	1.40	5.92
65	4.33	4.76	1.51	6.37
70	4.53	4.98	1.62	6.60
75	4.71	5.18	1.73	6.91
80	4.88	5.37	1.84	7.21
85	5.05	5.55	1.96	7.51
90	5.20	5.72	2.08	7.80
95	5.34	5.87	2.20	8.07
100	5.47	6.02	2.32	8.33

Input Rate $Sr^{89} = 1 \times 10^6$ curies/day
$Sr^{90} = 1 \times 10^5$ curies/day

Calculated Equilibrium Heat Generation Rate

$Sr^{89} = 8.05 \times 10^5$ BTU/hr

C. CESIUM

The only isotope of cesium that is important to long-term waste storage is cesium-137. This isotope decays by releasing both beta particles and gamma rays and has a half-life of 30 years. Cesium-137 and its short half-life daughter (barium-137 with a half-life of 2.6 minutes) produce 4.8 thermal watts or 16.4 BTU/hr per kilocurie.

Cesium salts, being soluble in neutralized high-level wastes, can be stored in the underground storage tanks during the time when the waste is boiling because the thermal watts contributed are small compared to the total heat being released. When the short half-life isotopes have decayed and cesium becomes the predominant heat producer in the supernatant, the liquid can be pumped to the 221-B building and the cesium separated. A water leach will recover most of the cesium in the sludge. Flowsheets exist for the recovery of cesium from current wastes and will be used if the demand for cesium exceeds the supply available from stored wastes.

Cesium-134 must be considered as a thermal heat source if current wastes are processed for cesium. The half-life is 2.1 years; however, the quantity of the lighter isotope in current wastes is approximately 5 percent of the amount of cesium-137. Cesium-134 releases a total of 10.3 thermal watts of energy or 35 BTU/hr per kilocurie during its decay to the stable barium-134 isotope. In stored wastes, the heat evolved from cesium-134 decreases to an insignificant amount after ten years.

D. STORAGE OF STRONTIUM AND CESIUM

Storage of strontium and cesium in the 221-B Canyon tanks in an aqueous solution is considered to be interim storage. Final storage, permanent storage or semi-permanent storage will be in high-integrity containers probably designed to allow the isotope to be removed if commercial application can be developed. The encapsulation of isotopes may be completed within the B-Plant complex or in a separate building. A prototype packaging system is being developed to demonstrate loading of the strontium-90 or cesium-137 on a synthetic alumino-silicate ion exchanger in a stainless steel container, drying the bed after 500 to 1,000 kilo curies of an isotope have been loaded, and welding the container. Handling techniques during these operations will comply with rigid safety requirements. Storage of these containers may be in a water basin for ease of removing the heat liberated. The water basin technique also provides a means of determining the integrity of the containers by continuously monitoring the water.

Interim storage of strontium product solutions are in the tanks listed in Table VII-6. Since the volume of strontium concentrate added to a storage tanks is small (20 to 40 gallons of concentrate per 100 flow of IAF), no direct cooling from the coils or tube bundles can be attained until the solution level is in contact with the coil or tube bundle. Therefore, tanks which are to receive

D. STORAGE OF STRONTIUM AND CESIUM (Continued)

strontium concentrate during a processing campaign should contain a water butt to raise the solution level so that direct contact is made with the cooling coil or tube bundle before the strontium concentrate is added. Depending upon the quantity and concentration of the solution, the portion of the cooling coil or tube bundle in contact with the solution must have a greater cooling capacity than the total heat emitted from the solution.

A typical (hypothetical) solution heating curve and tank cooling capacity versus tank volume is shown in Figure VII-8. A 250-gallon water butt in the tank is sufficient to maintain the cooling capacity of the coils above the heat evolved from the solution. The vertical drop in the heat output curve is that period of time when Purex acid waste is not being processed but is accumulating in tank 001 in the 244 AR Vault. Other campaign cycles for isolation and concentration of strontium solution from PAW will result in curves similar to that shown. The increase in heat output of the solution and the length of each line segment will depend upon the final concentration of the solution and the length of time of each campaign cycle.

TABLE VII-6

STRONTIUM CONCENTRATE STORAGE TANKS

Tank Number	Capacity Gallons	Designed Cooling Duty BTU/hr	Volume To First Coil Gallons*
6-1	5000	1,000,000	250
6-2	5000	1,000,000	250
7-1**	5000	500,000	350
7-2**	5000	500,000	350
8-1**	5000	500,000	360
8-2**	5000	500,000	360

* The volume to the cooling jacket is not listed. In some tanks the jacket is lower than the coil or tube bundle and in some other tanks is higher.

** These tanks have cooling jackets.

Cesium is removed from stored supernatant waste solutions and concentrated. Interim storage will be in the tanks listed in Table VII-7. Because the half-life of cesium-137 is 30 years, the quantity of the isotope which can be stored in a given tank will be limited by the cooling capacity of the tank. The decay of cesium-137 produces both beta and gamma radiations totaling 4.8 thermal watts or 16.4 BTU/hr energy per kilocurie. The cesium produce will be concentrated to 20-30 BTU per hour per gallon before it is transferred to a storage tank.

D. STORAGE OF STRONTIUM AND CESIUM (Continued)

Requirements for the tank into which the cesium concentrate is being pumped during a campaign are the same as those for receiving the strontium concentrate; that is, a water butt should be provided so the cooling capacity of the coils (tube bundle) will safely handle the heat evolved from the stored isotope.

TABLE VII-7

CESIUM CONCENTRATE
STORAGE TANKS

Tank Number	Capacity Gallons	Designed Cooling Duty BTU/hr	Volume To First Coil Gallons*
14-2**	3900	300,000	500
17-1**	5000	100,000	60

* The volume to the cooling jacket is not listed. In some tanks the cooling jacket is lower than the coil or tube bundle, and in other tanks it is higher.

** These tanks have cooling jackets.

E. RADIOLYSIS OF AQUEOUS SOLUTIONS

Aqueous solutions undergo numerous changes when radioactive materials are present in the solutions. Some of the mechanisms involved are: ionization, transfer of electronic excitation from one molecule to another, electron capture, dissociation of excited vibrational states, neutralization, formation of excited electronic states, and unpredictable reactions.

Hydrogen gas evolution from aqueous solutions has been observed in Purex process vessels, in the 244 CR vault and in B-Plant process vessels at rates up to 1.2 cubic centimeters per watt-hour. See Reference 3. Since the lower explosive limit of hydrogen gas in air is four volume percent, an upper hydrogen gas concentration of two volume percent is specified for operational control purposes. Where normal vessel air in-leakage cannot be guaranteed to dilute evolved hydrogen to less than three volume percent, a minimum air dilution rate of 2.06×10^{-3} cubic feet per watt-hour should be provided by direct air dilution. Table VII-8 presents the minimum air dilution rates required per kilo-curie for the various fission products.

Referring to Table VII-5 and Figure VII-5, the purge air requirements for a strontium-89 and -90 mixture will be nine standard cubic feet per minute (SCFM). The purge air requirements for cesium solution in storage (maximum) is ten SCFM.

E. RADIOLYSIS OF AQUEOUS SOLUTIONS (Continued)

TABLE VII-8

AIR DILUTION REQUIREMENT FOR VARIOUS FISSION PRODUCTS

Fission Product	Air Dilution Requirement SCF of Air/hr/KCi
Sr^{89}	0.007
Sr^{90}	0.013
$Zr \cdot Nb^{95}$	0.010
Ru^{103}	0.007
Ru^{106}	0.020
Ce^{141}	0.003
Ce^{144}	0.017
Y^{91}	0.007
Cs^{137}	0.010
Pm^{147}	0.0008

F. FUTURE ISOTOPE SEPARATION

Table VII-9 lists various isotopes which are or may be separated and packaged in the future. The separations technology of these isotopes has been developed except for rhodium, palladium and antimony. The technology for those is being developed. The symbols used in Table VII-9 are:

α	alpha particle	$\beta+$	positron
$\beta-$	beta particle	γ	gamma ray

Energies listed after a symbol are presented in decreasing order of abundance. Energies of the radiations are in millions of electron volts. The symbols used for the half-lives are d = days and y = years.

TABLE VII-9

Isotope	Symbol and Isotopic Weight	Half-Life	Decay Mode Energies
Strontium	Sr^{89}	50.4d	$\beta-$ 1.46
Strontium	Sr^{90}	28 y	$\beta-$ 0.54
Technetium	Tc^{99}	2.1×10^5y	$\beta-$ 0.29
Rhodium*	Rh^{102}	210d	$\beta-$ 1.15; $\beta+$ 1.28; γ 0.475
Palladium*	Pd^{107}	7×10^6y	$\beta-$ 0.035
Antimony*	Sb^{125}	2.7y	$\beta-$ 0.30, 0.12, 0.62 γ 0.035, 0.67, 0.46
Cesium	Cs^{137}	30y	$\beta-$ 0.51, 1.18
Cerium	Ce^{144}	285d	$\beta-$ 0.32, 0.19; γ 0.133
Promethium	Pm^{147}	2.62y	$\beta-$ 0.225
Neptunium	Np^{237}	2.20×10^6y	α 4.78, 4.76 γ 0.087, 0.019, 0.030
Americium	Am^{241}	458y	α 5.58, 5.43; γ 0.060
Plutonium	Pu^{239}	2.44×10^4y	α 5.15, 5.13, 5.10 γ 0.053, 0.013

*Separations technology being developed.

G. APPENDIX

Difference Equations

The fundamental problem in the theory of difference equations is in many ways similar to the theory of differential equations with the exception that the mathematical object sought here is a sequence rather than a function. A sequence 's' is defined by associating with every member 'n' of a set of integers, a (real) number 'S_n'.

Two examples are presented to give an intuitive feel for difference equations.

Example 1

Consider the differential equation

(1) $y' = 2x$

with the condition that $y = 0$ when $x = 0$. Integrating we have

(2) $y = \int y' d\,x = \int 2\,x\,d\,x = x^2 + C$

where C is the constant of integration. From the condition the constant C is equal to zero in equation 2, the solution to the differential equation 1 is

(3) $y = x^2$

The graph for this solution is

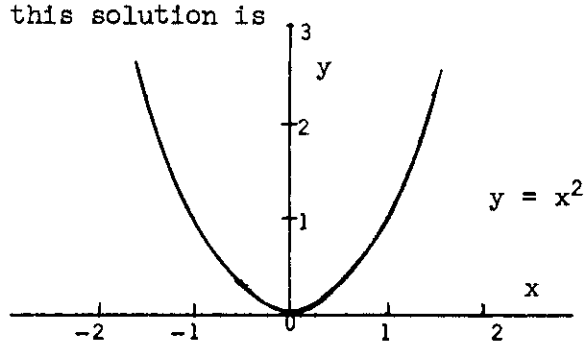

Figure 1

The sequence

(4) $y_n = n^2 \qquad n = -2, -1, 0, 1, 2, \ldots$

corresponds to the function $y = x^2$, and the difference equation which corresponds to $y' = 2x$ is

G. APPENDIX (Continued)

(5) $y_n - y_{n-1} = n^2 - (n-1)^2 = 2n-1 \qquad n = -2, -1, 0, 1, 2, \ldots$

with the condition $Y_o = 0$. From the above construction, it is clear that the sequence (2) is the solution to the difference equation (3).

The usual problem is to find the solution sequence when the difference equation is given. The procedure is analogous to solving differential equations.

Rewriting equation (5)

(6) $y_n - y_{n-1} = 2n-1 \qquad y_o = 0$

First the homogeneous equation is solved

(7) $y_n - y_{n-1} = 0$

Clearly, $Y_n^h = C$ (constant) is a solution to equation (7) since $C - C = 0$.

The particular solution is solved by trial and error in which the following form is tried

(8) $y_n^p = an^2 + bn$

substituting equation (8) into (6)

$$y_n - y_{n-1} = an^2 + bn - [a(n-1)^2 + b(n-1)]$$
$$= an^2 + bn - an^2 + 2an - a - bn + b = 2n-1$$

or

$$2an - a + b = 2n-1$$

therefore $\quad 2an = 2n \quad$ which implies $\quad a = 1$

and $\quad -a + b = -1 \quad$ so $b = 0$

thus $\quad y_n^p = n^2$

The general solution is the sum

$$y_n = y_n^h + y_n^p$$

or

$$y_n = C + n^2$$

From the condition $Y_o = 0$, the constant C is equal to zero.

Thus $\quad y_n = n^2$

is the solution to equation (6).

Example 2

The difference equation

(1) $$A_{n+1} = A_n e^{-\lambda} + IR \quad , A_o = 0 \quad , \quad n = o, 1, 2, \ldots$$

describes the curies of material in a waste tank with the assumptions:

(a) The tank is initially empty ($A_o = 0$),

(b) Constant input rate IR (curies/day), and

(c) The isotope half-life, expressed in days, is $\ln 2/\lambda$

Here n denotes the nth day of the filling, and A_n is the number of curies in the tank on the nth day.

Rewriting equation (1)

(2) $$A_{n+1} - A_n e^{-\lambda} = IR \qquad n = 0, 1, 2, \ldots$$

with the initial condition $A_o = 0$.

The homogeneous equation is solved first

(3) $$A_{n+1} - A_n e^{-\lambda} = 0$$

A first trial solution could be

(4) $$y_n^h = Ce^{-n\lambda}$$ where y^h is the homogeneous solution

Substituting (4) into (3)

(5) $$y_{n+1}^h - y_n^h e^{-\lambda} = Ce^{-(n+1)\lambda} - Ce^{n\lambda}e^{-\lambda} = 0$$

Thus

y_n^h is a solution for (3)

For a particular solution (Y^p) to (3), the following can be tried

(6) $$y_n^p = a_1$$

(7) $$y_n^p = a_1 + a_2 n \ , \quad \text{etc.}$$

Trying (6) as a particular solution to (2) results in

$$y_{n+1}^p - y_n^p e^{-\lambda} = IR$$

$$a_1 - a_1 e^{-\lambda} = IR$$

$$a_1(1-e^{-\lambda}) = IR$$

$$a_1 = \frac{IR}{1-e^{-\lambda}}$$

Thus

(8) $$y_n^p = \frac{IR}{1-e^{-\lambda}}$$

which is the particular solution to (2)

Then

(9) $$y_n = y_n^h + y_n^p = Ce^{-n\lambda} + \frac{IR}{1-e^{-\lambda}}$$

is a general solution. Using the initial condition of $Y_o = 0$ to evaluate C

$$y_0 = 0 = Ce^{-0\lambda} + \frac{IR}{1-e^{-\lambda}}$$

or

$$C = -\frac{IR}{1-e^{-\lambda}}$$

Thus

(9) $$y_n = \frac{IR}{1-e^{-\lambda}} \left(1-e^{-n\lambda} \right)$$

is the general solution.

If equation (7) had been substituted as a trial solution, the value of a_2 would be equal to zero and the substitution would reduce to equation (6).

The equation $$A_n = \frac{IR}{1-e^{-\lambda}} \left(1-e^{-n\lambda} \right)$$

describes the conditions for the total heat evolved by Sr^{89} during a campaign cycle.

For a more complete presentation, refer to reference 4.

H. REFERENCES

1. H. H. VanTuyl. Fission Product Generation and Decay Calculations, HW-75978, December 12, 1962. (Secret)

2. G. Friedlander, J. W. Kennedy, and J. M. Miller, Nuclear and Radiochemistry, John Wiley & Sons, Inc., New York, 1955, Second Edition.

3. Fission Products Process Engineering (authors not stated) Specifications and Standards, Strontium Purification at the Strontium Semiworks, RL-SEP-20, Feb. 15, 1965.

4. Peter Hervici, Elements of Numerical Analysis, John Wiley & Sons, Inc., New York, 1964.

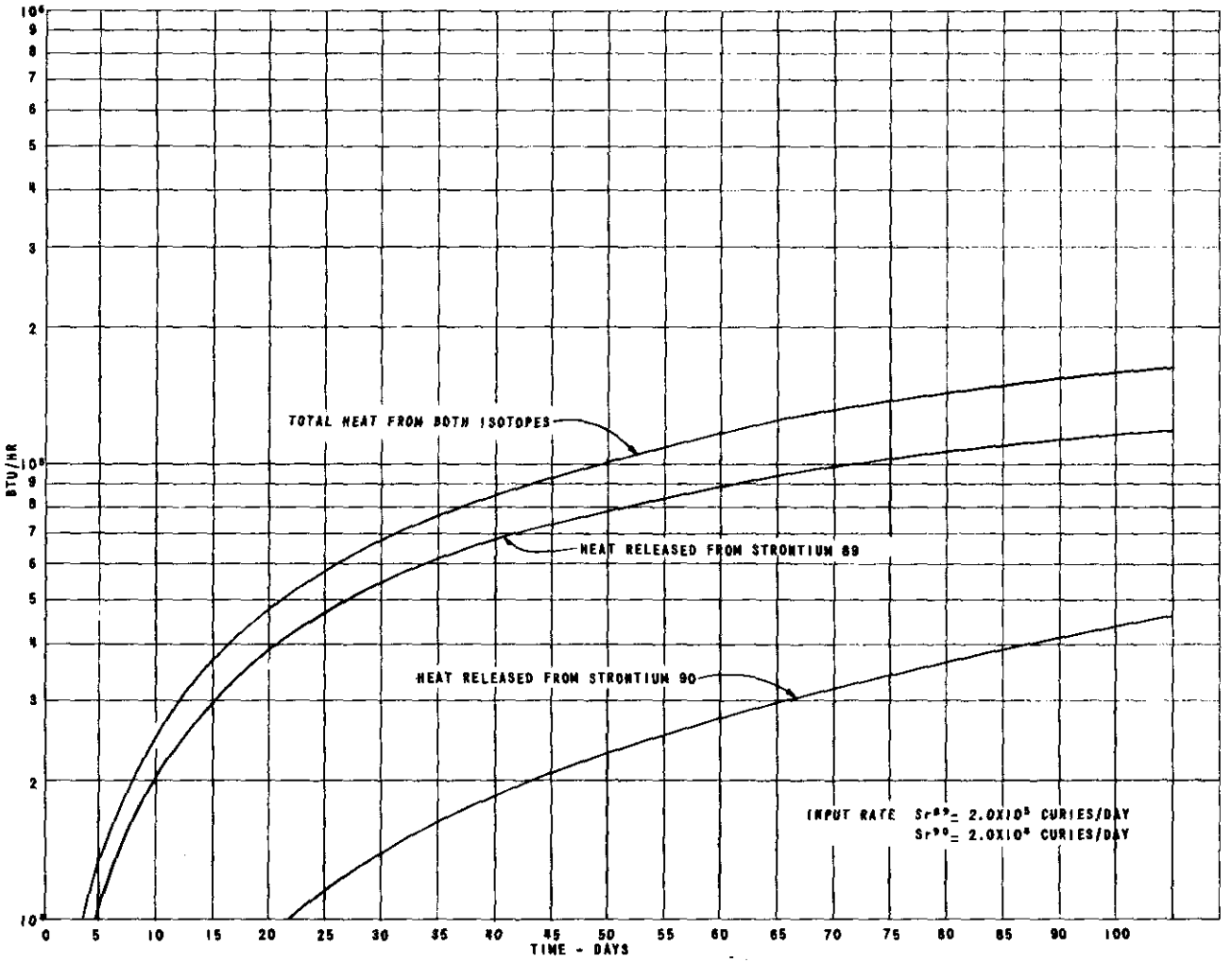

FIGURE VII-1

Heat Evolved from Strontium Vs Time

2×10^4 Curies Sr-90 per Day

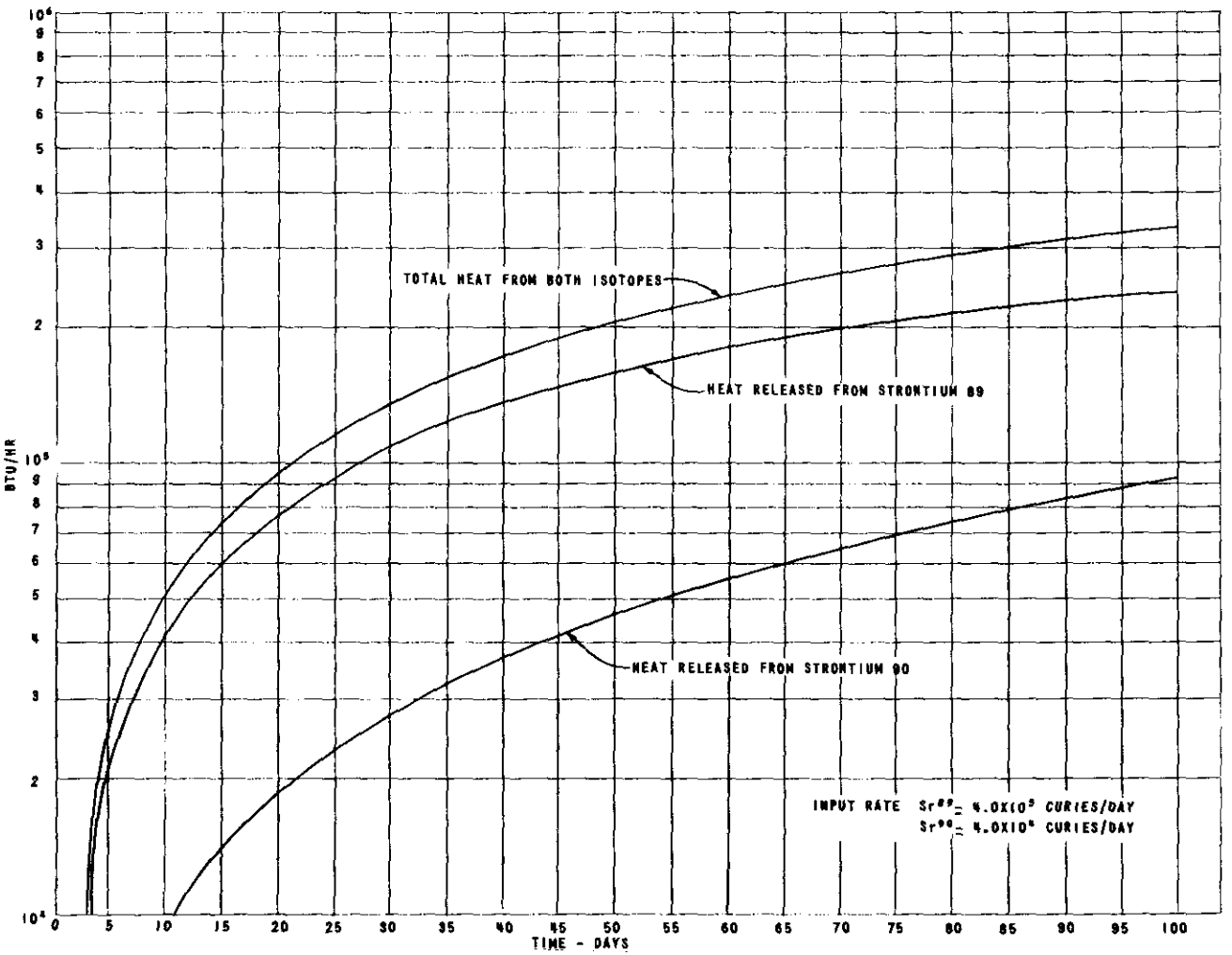

FIGURE VII-2

Heat Evolved from Strontium Vs Time

4×10^4 Curies Sr-90 per Day

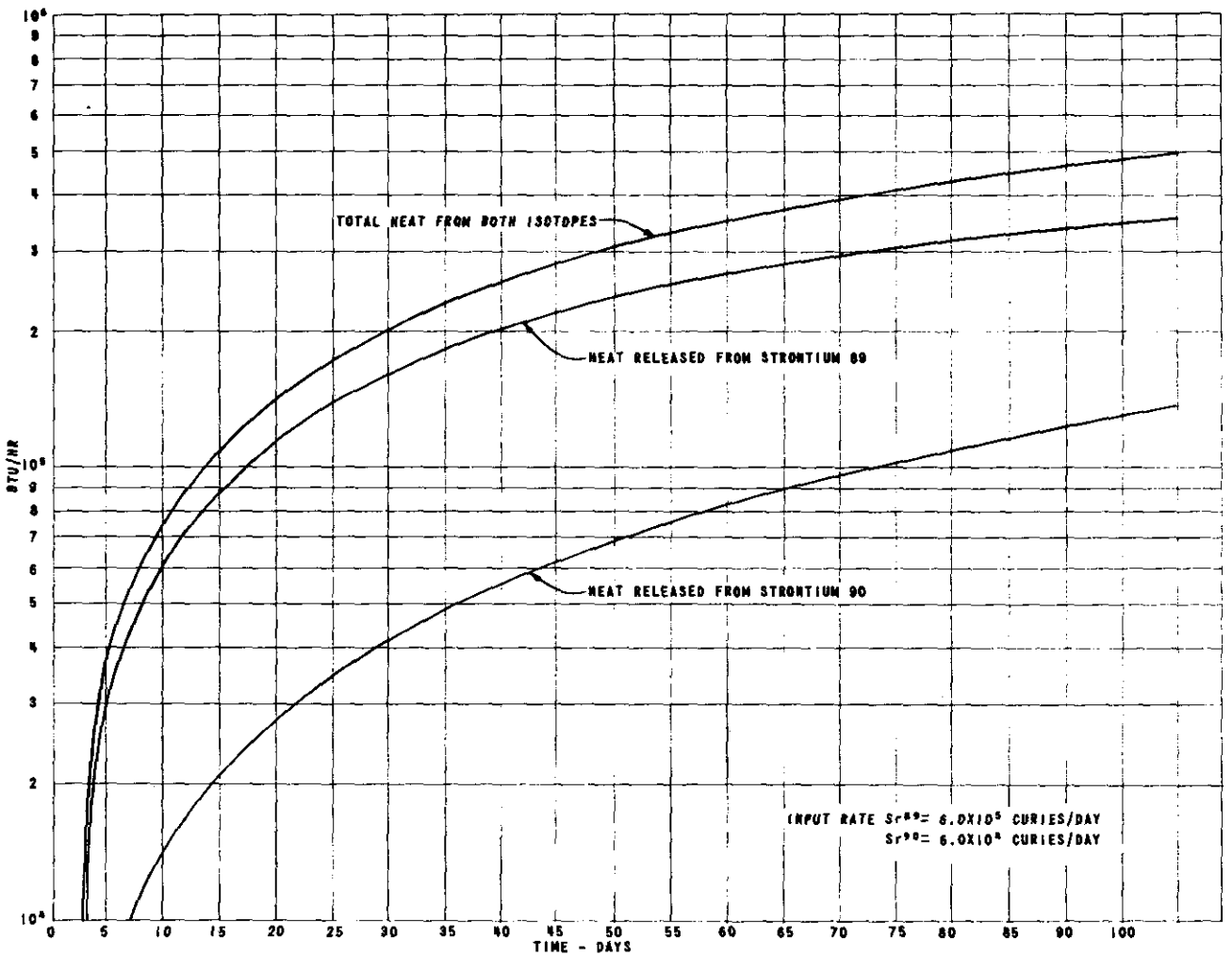

FIGURE VII-3

Heat Evolved from Strontium Vs Time

$6x10^4$ Curies Sr-90 per Day

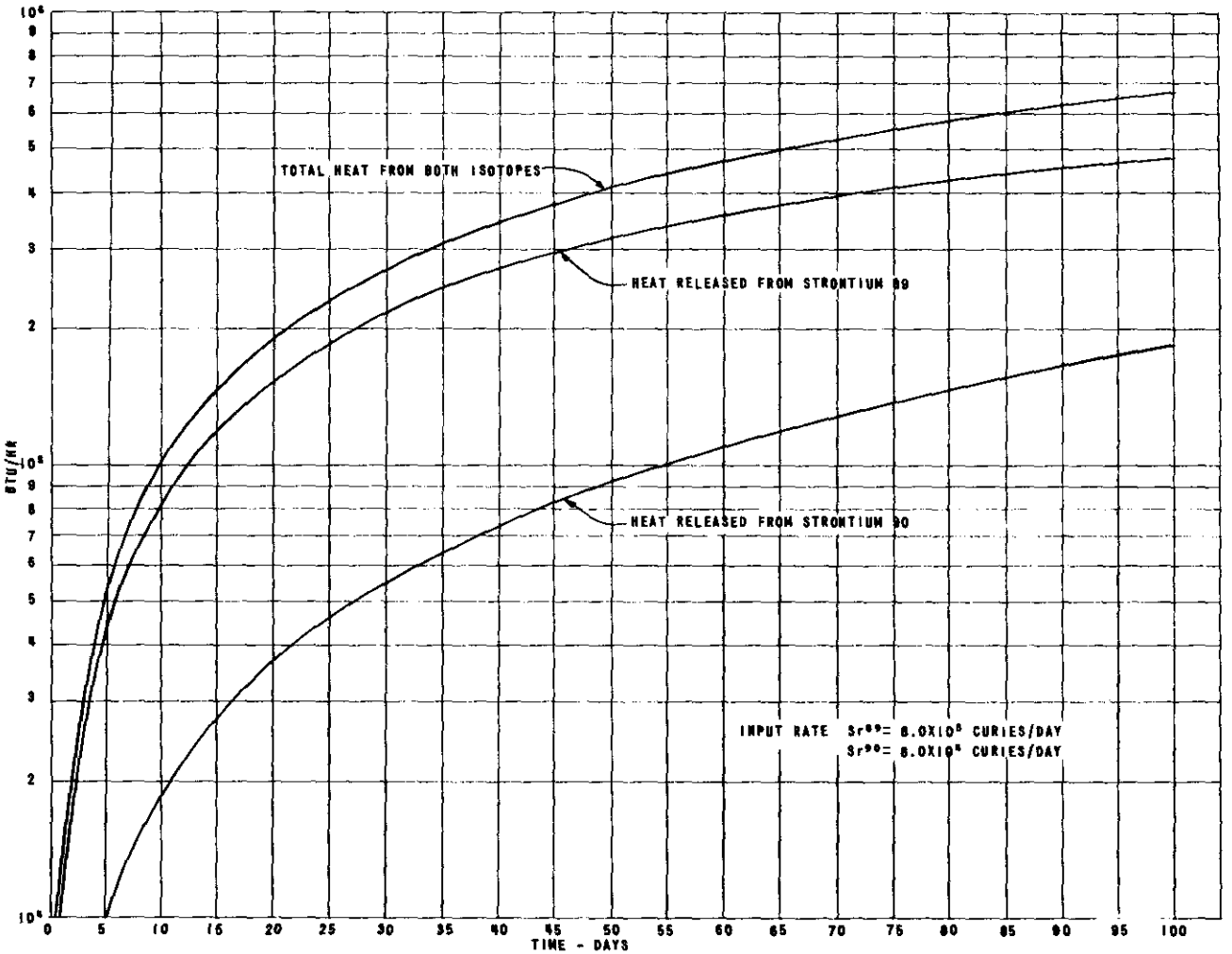

FIGURE VII-4

Heat Evolved from Strontium Vs Time

8×10^4 Curies Sr-90 per Day

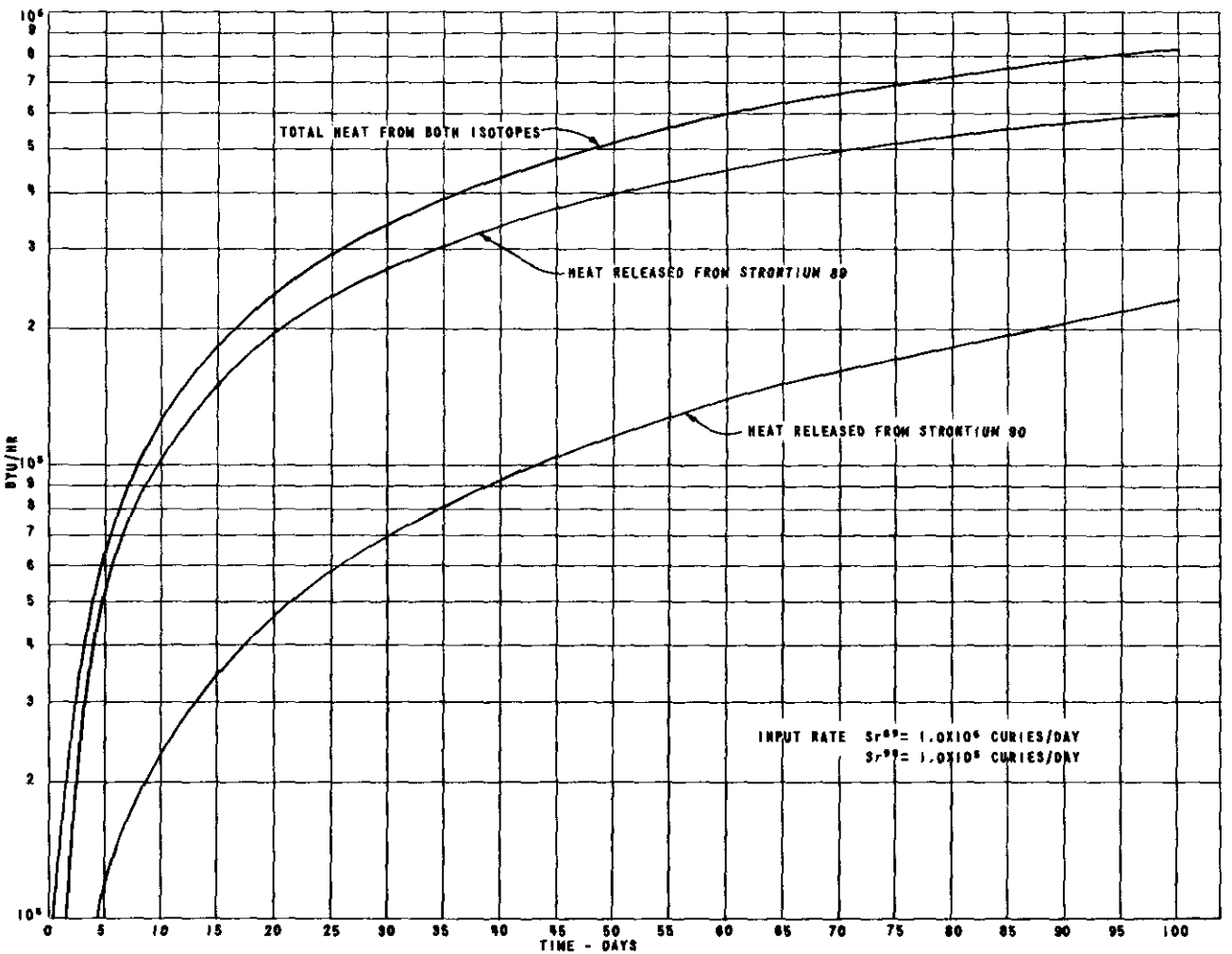

FIGURE VII-5

Heat Evolved from Strontium Vs Time

1×10^5 Curies Sr-90 per Day

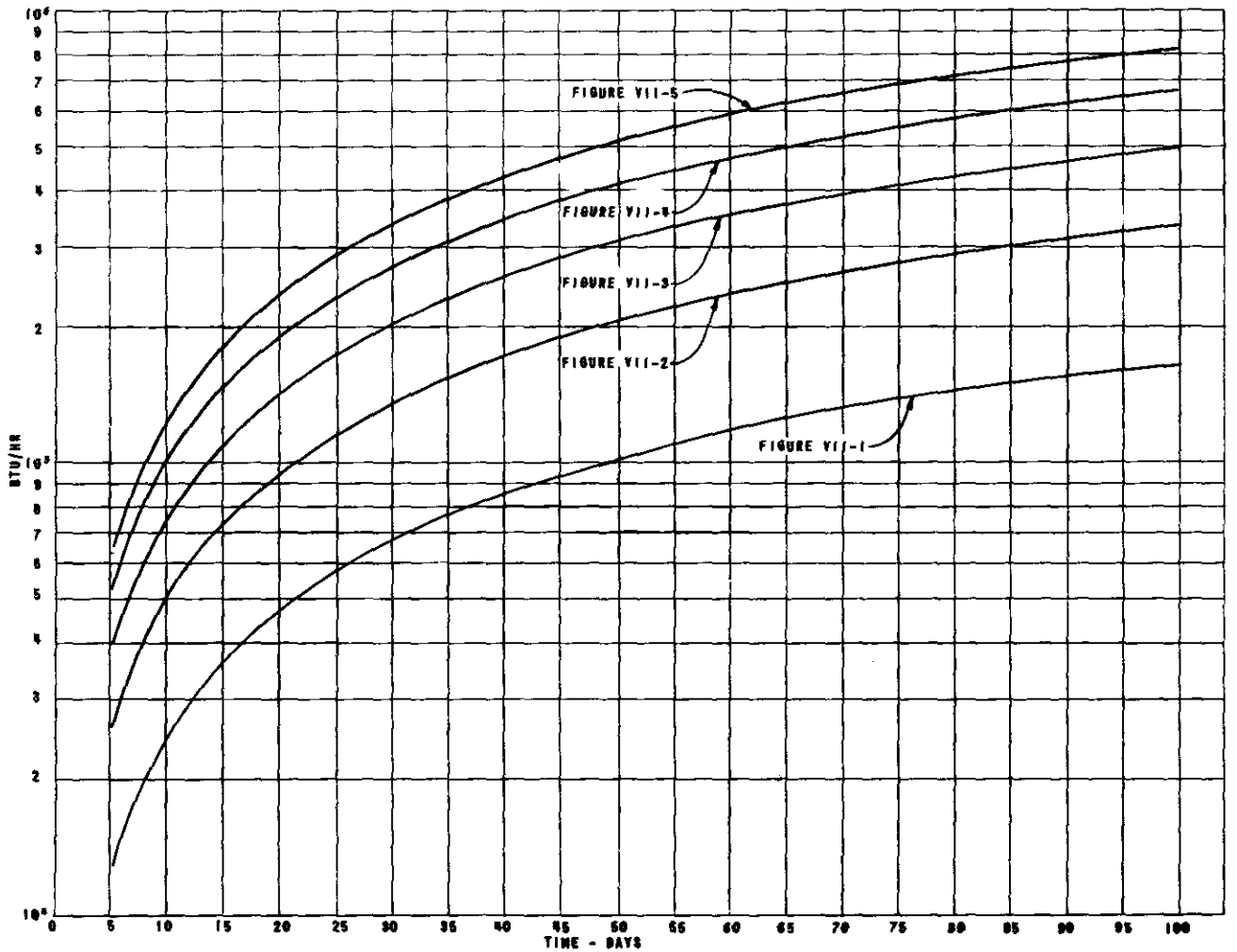

FIGURE VII-6

Heat Evolved from Strontium Vs Time

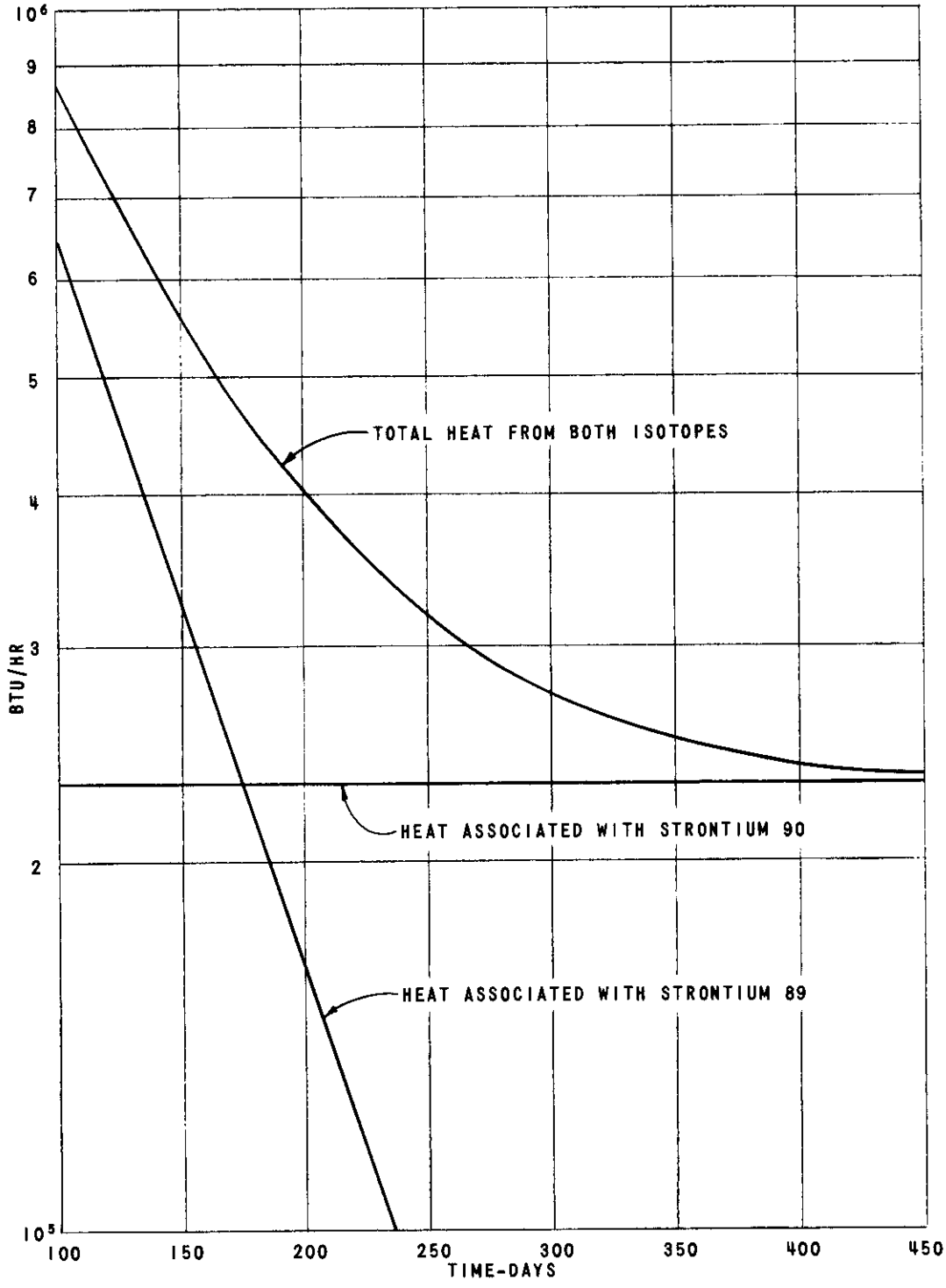

FIGURE VII-7

Strontium 89 and 90 Decay Curves

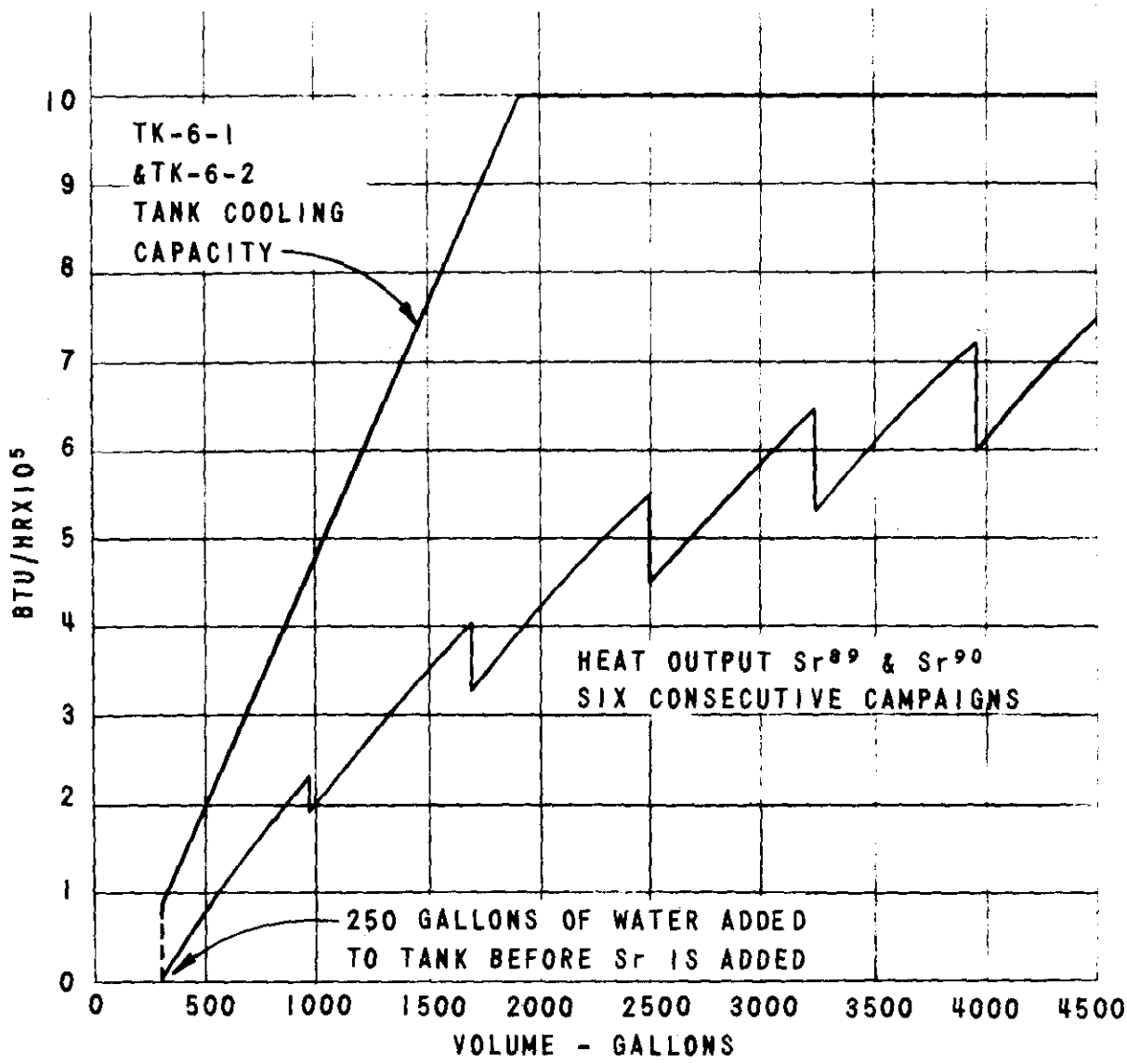

FIGURE VII-8

Tank Volume Vs Tank Cooling Capacity
and Sr-89 and Sr-90 Heat Output

PART IV, Continued

B-PLANT PRODUCT AND WASTE HANDLING

CHAPTER VIII

WASTE HANDLING

By

W. L. Godfrey

PART V

PLANT AND EQUIPMENT

CHAPTER IX

GENERAL DESCRIPTION OF WASTE MANAGEMENT FACILITIES

By

J. S. Buckingham

and

D. C. Leyson

PART V: PLANT AND EQUIPMENT

CHAPTER IX

GENERAL DESCRIPTION OF WASTE MANAGEMENT FACILITIES

Page

A. GENERAL LAYOUT OF PLANT 905

1. Layout of Production Areas 905
2. 200 Areas. 907
3. Waste Management Facilities. 908
   3.1 B-Plant Area. 908
   3.2 Waste Tank Farms. 908
   3.3 244-AR Vault Area 912

B. B-PLANT 913

1. Architectural Description. 913
2. Canyon 915
   2.1 Process Cells 915
   2.2 Pipe Trench 915
   2.3 Air Tunnel. 915

3. Galleries. 916
   3.1 Crane Cab Gallery 916
   3.2 Operating Gallery 916
   3.3 Pipe Gallery. 916
   3.4 Electrical Gallery. 916

4. 271-B Service Building 917
5. Building Ventilation 917
   5.1 271-B Ventilation 917
   5.2 221-B Operating Area Ventilation. 918
   5.3 221-B Processing Area Ventilation 918
   5.4 291-B Exhaust Filter. 918
   5.5 291-B Sand Filter 920
   5.6 291-B Exhaust Fans and Process Stack. 921

6. B-Plant Vessel Vent Systems. 922
   6.1 Vessel Vent System No. 1. 922
   6.2 Vessel Vent System No. 2 (Ammonia present). . . . 922

7. Chemical Tank Farm 211-B 923
8. Utilities. 926
   8.1 Steam 926
   8.2 Compressed Air Systems 928
      8.2.1 Process Air. 928
      8.2.2 Instrument Air 928
      8.2.3 Breathing Air. 928

Page

8.3 Raw Water 928
8.4 Sanitary Water. 929
8.5 Process Water 929
8.6 Electrical Power Distribution 929

C. WASTE STORAGE TANK FARMS. 931

1. Non-Boiling Tank Farms 932
1.1 General Description of Non-Boiling Tank Farms . . 932
1.2 Layout of the Non-Boiling Tank Farms. 932
1.3 Construction of Non-Boiling Waste Tanks 932
1.3.1 530,000-Gallon Waste Tank. 932
1.3.2 758,000-Gallon Waste Tanks 932
1.3.3 54,500-Gallon Waste Tanks. 940

2. Boiling Waste Tank Farms 941
2.1 General Description of the Boiling Waste. 941
Tank Farms
2.2 241-AX and A Tank Farms 942
2.2.1 A Tank Farm. 943
2.2.2 AX Tank Farm 946

2.3 241-SX Tank Farm. 947

D. WASTE TRANSFER FACILITIES 949

1. General Description of Waste Transfer Facilities . . . 949
2. 244-AR Vault 949
2.1 Layout of 244-AR Vault Area 949
2.2 Description of 244-AR Vault Buildings 951
2.3 244-AR Vault Equipment and Facilities 951
2.3.1 Tanks. 951
2.3.2 Ventilation. 951
2.3.3 Vessel Vent. 954
2.3.4 Pumps. 955
2.3.5 Utilities. 955

2.4 Sluicing Facilities 956

3. A and AX Transfer Facilities 956
3.1 Pump Pits 956
3.2 Sluice Pits 957
3.3 Diverter Stations 957
3.4 Diversion Boxes 961

4. Other Waste Transfer Facilities. 961
4.1 244-CR Vault. 961
4.2 244-BXR, 244-TXR, 244-UR Vaults 962
4.3 241-WR Diversion Station. 962

Page

4.4 Inter-Area Transfer Lines 962
4.5 Other Diversion Boxes 962

Drawing Index. 964

References 968

TABLES

IX-1 Facilities Located in 200-W Area 907

IX-2 Facilities Located in 200-E Area 908

IX-3 Facilities Located in B-Plant Area 911

IX-4 High Level Waste Tank Farms. 912

IX-5 211-B Chemical Tank Farm 923

IX-6 Impurities in Filtered and Process Water 930

IX-7 Waste Storage Tanks at Hanford 931

IX-8 AX and A Tank Farm Comparison. 943

IX-9 AR Vault Tanks 954

FIGURES

IX-1 Map of the Hanford Reservation 906

IX-2 Plot Plan of 200-W Area. 909

IX-3 Plot Plan of 200-E Area. 910

IX-4 Cross Section of 221-B and 271-B Buildings 913

IX-5 211-B Canyon Building. 914

IX-6 Plot Plant B-Plant Area. 919

IX-7 Ventilation Diagram, B-Plant Processing and Service Areas. . 920

IX-8 291-B Exhaust Filter 921

IX-9 Vessel Vent Systems. 924

Page

IX-10 Cell 22 Vessel Vent Equipment 925
IX-11 Chemical Tank Farm, 211-B 926
IX-12 Schematic of Steam Trunk Lines in 221-B 927
IX-13 Layout of B-Tank Farm 933
IX-14 Layout of BX and BY Tank Farms. 934
IX-15 Layout of C Tank Farm 935
IX-16 Layout of S Tank Farm 936
IX-17 Layout of T Tank Farm 937
IX-18 Layout of TX and TY Tank Farms. 938
IX-19 Layout of U Tank Farm 939
IX-20 Storage Tank for Non-Boiling Waste. 940
IX-21 Storage Tank for Boiling Waste. 941
IX-22 Layout of A and AX Tank Farms 944
IX-23 Cross Section of A Farm Waste Storage Tank. 945
IX-24 Cross Section of AX Farm Waste Storage Tank 946
IX-25 Layout of SX Tank Farm. 948
IX-26 Layout of 244-AR Vault Area 950
IX-27 Floor Plan of 244-AR Vault. 952
IX-28 Elevation of 244-AR Vault 953
IX-29 Transfer Lines Associated with 244-AR Vault 958
IX-30 Diverter Station. 959
IX-31 Simplified Diverter Station Transfer Routes 960
IX-32 Diversion Box 963

PART V: PLANT AND EQUIPMENT

CHAPTER IX

GENERAL DESCRIPTION OF WASTE MANAGEMENT FACILITIES

This chapter presents a general architectural and functional description of those facilities associated with the Waste Management Program. More detailed discussions of equipment, equipment arrangement, flowsheets, and procedures are found elsewhere in this manual.

A. GENERAL LAYOUT OF PLANT

1. Layout of Production Areas

As originally designed, the Hanford Reservation production areas were constructed as essentially independent, self-contained units of the entire production complex. The geographically widely-separated areas were selected to ensure continuity of production in other facilities if one should undergo damage or serious contamination spread. A site plan of the Hanford Reservation is shown in Figure IX-1.

Production units of the complex are located in three general operating areas known as the 100, 200, and 300 Areas. The 300 Area contains a technical library, laboratories, the Plutonium Recycle Test Reactor (PRTR), and other facilities administered by Battelle Memorial Institute, Pacific Northwest Laboratory. Also located in the 300 Area are facilities for the preparation of the uranium fuel elements used in the 100 Area reactors. Douglas United Nuclear operates the fuel preparation facilities.

The 100 Areas, operated for the AEC by Douglas United Nuclear, contain the plutonium production reactors and are situated adjacent to the Columbia River. This location was selected to ensure the availability of an adequate and continuing supply of cooling water to the reactors. The 100 Areas also supply water to the 200 Areas.

A total of nine production reactors has been built. These reactors are called 100-B, 100-C, 100-D, 100-DR, 100-F, 100-H, 100-KE, 100-KW, and 100-N. Technological improvements and improved operating efficiencies have permitted the deactivation of 100-D, 100-DR, 100-H, and 100-F.

After being irradiated in a reactor the uranium fuel elements or "slugs" are discharged from the reactor and stored in a cooling basin to allow short-lived radioactive isotopes to decay. Following the cooling period, the irradiated fuel elements are transported to the 200 Areas in railroad "cask cars" where uranium, plutonium, neptunium, and selected fission products are isolated and purified.

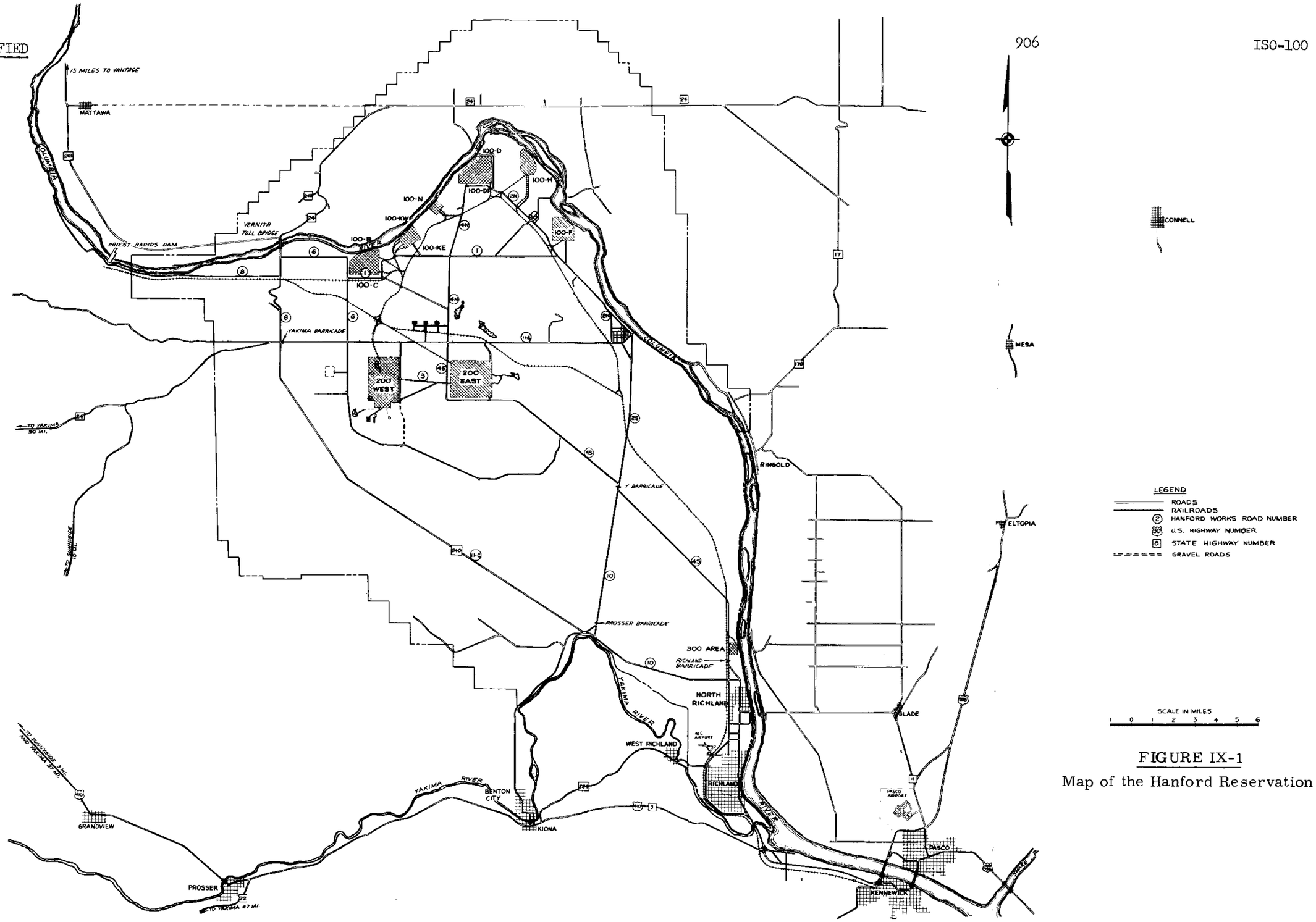

FIGURE IX-1

Map of the Hanford Reservation

2. 200 Areas

The chemical processing plants, waste management facilities, and various associated support organizations are located in the 200 Areas. The three 200 Areas, which are situated on a plateau south of the reactor sites, are: 200 East, 200 West, and 200 North.

The 200 North Area, which at present is not being used, contains lag storage facilities for irradiated fuel elements prior to their processing in the 200 East or 200 West chemical separations plants. In addition to the three storage basins located in the 200 North Area, there are three cribs, 216-N-3, 5, and 7, which are presently inactive but may be reactivated if the need should arise.

Facilities located in the 200 West Area are shown in Table IX-1 and facilities located in the 200 East Area are shown in Table IX-2.

Plot plans of the 200 Areas are shown in Figures IX-2 and IX-3.

TABLE IX-1

200 WEST AREA FACILITIES

Bldg. No.	Name and Purpose
202-S	Redox Plant for solvent extraction processing of uranium and plutonium.
222-S	Analytical, research, and development laboratories.
241-S 241-SX	Redox tank farms for underground storage of high level liquid waste.
221-T	Canyon building used for $BiPO_4$ process. Presently used for equipment decontamination by Special Services Sub-Section.
271-T	Service building for 221-T, and offices used by Facilities Engineering Section.
224-T	Concentration building for $BiPO_4$ process. Unused at present.
222-T	Offices for Personnel Protection Operation.
241-T 241-TX 241-TY	Tank farms for the underground storage of high level waste.
242-T	Waste Evaporator.
221-U	Canyon building containing solvent extraction equipment used for the Uranium Recovery Program. Presently not being used.
271-U	Service building for 221-U, and offices of Document Classification and Custody Operation and Nuclear Materials Sub-Section.
222-U	Laboratory building being used by Battelle-Northwest Laboratories.
224-U	Uranium Oxide conversion plant.
241-U	Tank farm for the underground storage of high level waste.
231-W	Plutonium laboratory of Battelle-Northwest Laboratories.
234-5	Plant and laboratory for the conversion and fabrication of plutonium.
242-Z	Plutonium Reclamation facility.
282-W	Water reservoir.
283-W	Water treatment facility.
284-W	West area steam plant.
272-W	Machine shops.
277-U 277-S	Mock-up shops.
2704-W 2704-Z	Office buildings.
2709-W	Mail and duplicating offices.
2719-WA	First Aid.
2723-W	Face mask cleaning and repair facility.
2724-W	Laundry operated by ITT/FSS

TABLE IX-2
200 EAST AREA FACILITIES

Bldg. No.	Name and Purpose
202-A	Purex plant for solvent extraction processing of uranium and plutonium.
241-A 241-AX	Purex tank farms for underground storage of high level liquid waste.
244-AR	Vault facility for the handling and transfer of current and stored wastes.
221-B	B-Plant canyon building used for fractionization of wastes.
271-B	Service and office building for 221-B.
222-B	Offices used by plant Accounting operation.
224-B	Concentration building for $BiPO_4$ process. Unused at present.
241-B 241-BX 241-BY	Tank farms for the underground storage of high level waste and In-Tank Solidification units 1 and 2. (ITS-1 and ITS-2)
200-C	Hot semiworks used to purify strontium and rare earth fractions, and develop flowsheets used in B-Plant.
241-C	Tank farm for underground storage of high level liquid waste.
801-C	Cesium load-out facility used to load cesium into a shipping cask for off-site shipments.
209-E	Critical Mass Laboratory of Battelle-Northwest Laboratories.
275-EA	Essential Materials warehouse.
272-E 274-E	Maintenance shops and offices.
282-E 283-E	Water reservoir and treatment facility.
284-E	Steam plant.
2101-M	Graphite building houses certain Atlantic Richfield Hanford Company offices as well as ITT/FSS Electrical Utility Section.
2704-E	Administrative offices.
2713-E	Personnel accounting and security offices.
3719-E	First Aid.

3. Waste Management Facilities

3.1 B-Plant Area

The waste fractionization plant, B-Plant, is located in the northwestern quadrant of the 200 East Area. The name and function of the various installations within the B-Plant area are given in Table IX-3. A more detailed description of B-Plant is given in Section B of this chapter.

3.2 Waste Tank Farms

The term "waste tank farm" or "tank farm" is used to identify a cluster of large underground steel-lined concrete tanks. Neutralized high level radioactive wastes containing virtually all of the chemical salts and radioactive fission products passing through the chemical separations plants are stored in these tanks. If heat from radioactive decay is sufficiently high, solutions in the tank will boil and the tanks must be equipped with vapor handling facilities. These tanks are called boiling tanks, and the farm in which they are located is called a boiling tank farm. Shielding from radiation in the tanks is provided by the several feet of earth covering the tanks.

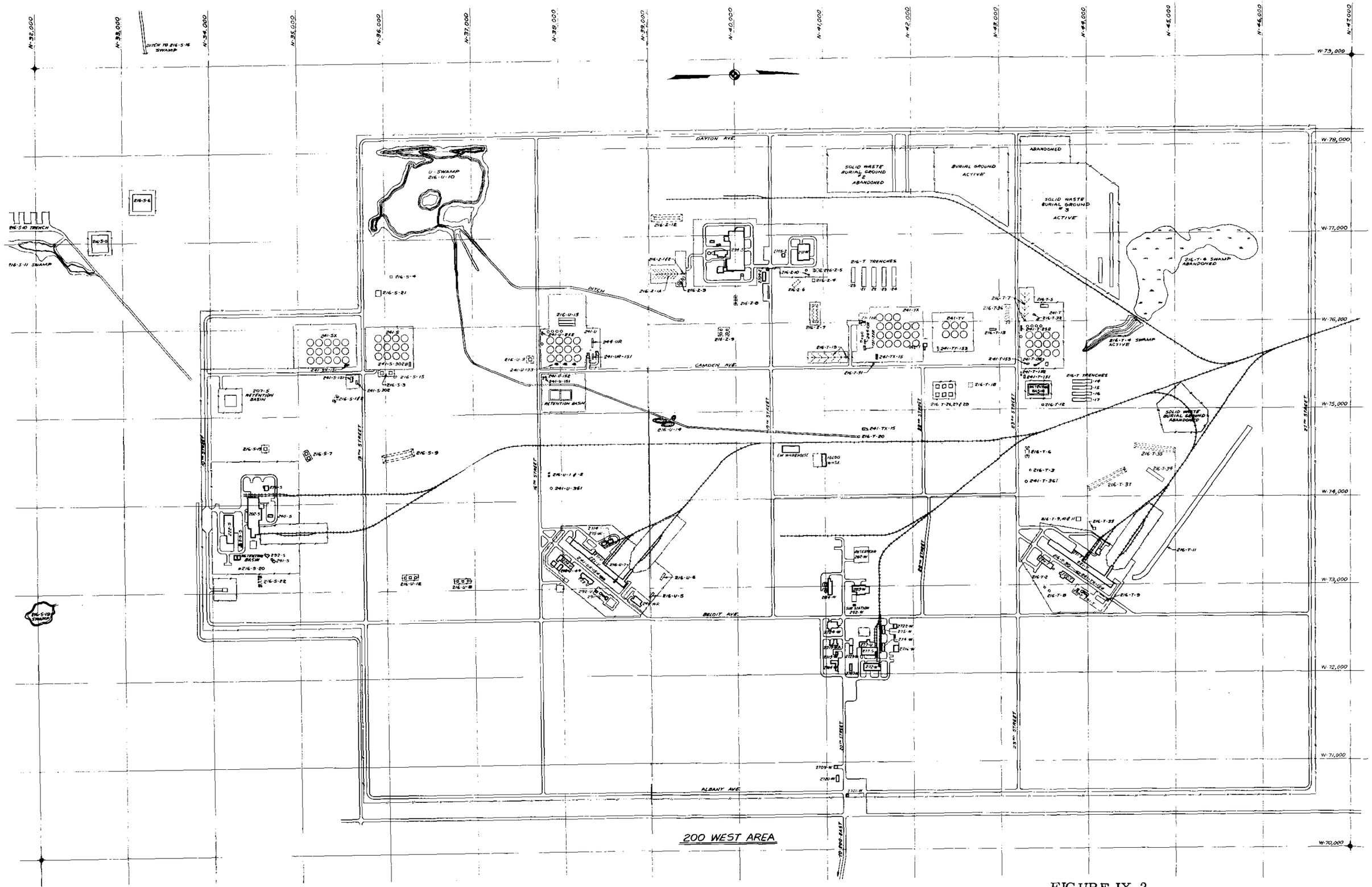

FIGURE IX-2

Plot Plan of 200 West Area

UNCLASSIFIED

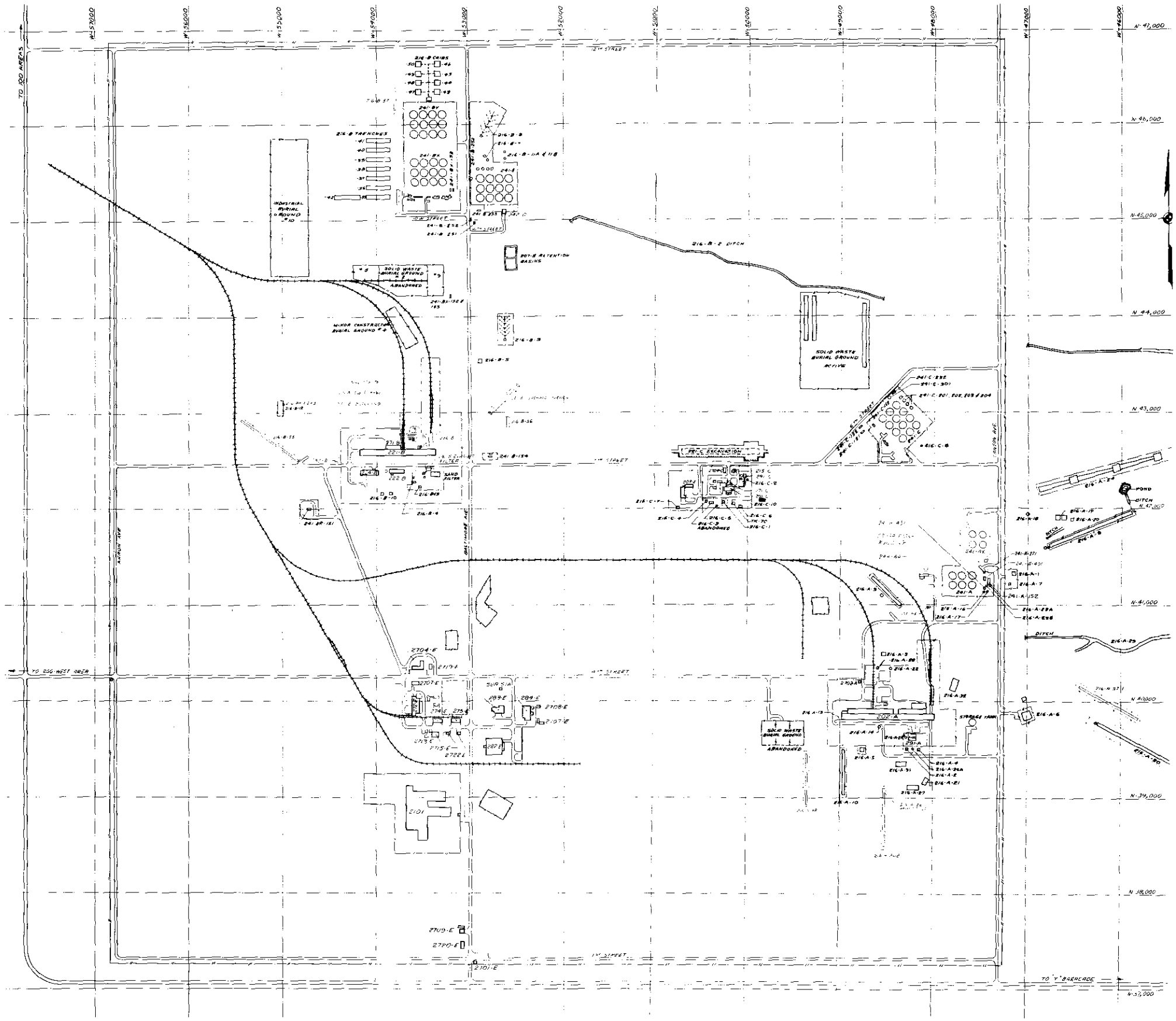

FIGURE IX-3

Plot Plan of 200 East Area

TABLE IX-3

FACILITIES LOCATED IN B-PLANT AREA

Installation	Name	Function
221-B	Processing Building (Canyon Bldg.)	a. Separation, concentration, purification, and storage of selected FP's. b. Waste Handling c. Solvent Recovery
271-B	Service Building	a. Offices b. Aqueous makeup of process chemicals. c. Instrument maintenance shops. d. Cold side ventilation equipment.
211-B	Chemical Tank Farm	Bulk storage of liquid chemicals.
217-B	Demineralizer	Demineralizer for process water.
276-B	Organic Makeup	Storage and makeup of fresh organic.
291-B	Fan House, Exhaust filters, filter instrumentation building, and exhaust stack.	Ventilation and vessel vent exhaust fans for process building. Emergency steam turbine fan.
292-B	Stack Sample Building	Sampling equipment for sampling process stack effluents.
282-B	Emergency Raw Water Pump	Emergency raw water well and pump to supply cooling water to process equipment.
222-B	Accounting Offices	Offices for plant accounting operation.
224-B	Concentration Building	Process cells unused at present.
2902-B	Elevated Water Tank	Emergency supply of sanitary water.
241-BX-154 241-ER-151 241-B-154	Diversion Box Diversion Box Diversion Box	Route waste and other streams to and from 221-B.
216-B-2	Crib	Cooling water and chemical sewer.
216-B-3	Crib	Cooling water and chemical sewer.
216-B-12	Crib	221-B process condensate.
216-B-13	Crib	291-B process stack drain.
216-B-55	Crib	221-B steam condensate.
216-B-56	Organic Crib	221-B organic waste.

Tank farms are designated by the number 241 suffixed by the letter designation of the separation plant they are built to serve. For example, 241-A is the tank farm for the Purex or A plant, while 241-T is the tank farm built to serve the bismuth phosphate process in 221-T. When replacement tank farms are required, they are designated with an X or a Y such as 241-AX, 241-TX, or 241-TY. Common usage generally omits the numerical 241 designation and the tank farms are referred to as A Farm, AX Farm, TX Farm, etc.

There is a total of 12 tank farms located in the Chemical Processing Department's 200 East and 200 West areas containing a total of 149 waste storage tanks. Table IX-4 lists the tank farms, their location, the number of tanks in each farm, and a very general description of the wastes stored in the farm. The tank farms are discussed in more detail in Section C of this chapter.

TABLE IX-4

HIGH LEVEL WASTE TANK FARMS

(See Figures IX-2 and IX-3 for location)

Tank Farm	Location	No. of Tanks	Description of Waste
241-A	200-E	6	Boiling Purex waste
241-AX	200-E	4	Boiling Purex waste
241-S	200-W	12	Non-boiling Redox waste
241-SX	200-W	15	Boiling Redox waste
241-C	200-E	12	Non-boiling coating and miscellaneous waste
241-B	200-E	12	Non-boiling coating, TBP, and miscellaneous waste
241-BX	200-E	12	Non-boiling coating, TBP, and miscellaneous waste
241-BY	200-E	12	Non-boiling coating, TBP, and miscellaneous waste
241-T	200-W	12	Non-boiling coating and miscellaneous waste
241-TX	200-W	18	Non-boiling Redox and miscellaneous waste
241-TY	200-W	6	Non-boiling miscellaneous waste
241-U	200-W	12	Non-boiling coating and Redox waste

3.3 244-AR Vault Area

The 244-AR Vault Area is located approximately 200 feet due west of the 241-A Tank Farm (see Fig. IX-3). The facility will provide waste acidification and transfer capability between the Purex Plant, 241-A and AX Tank Farms, and 221-B Waste Fractionization Plant. A more detailed description of the 244-AR Vault is given in Section D of this chapter.

B. B-PLANT

1. Architectural Description

The Waste Fractionization Plant (221-B) is a multi-storied, predominantly reinforced concrete structure, approximately 850 feet in length, 68 feet wide, and 72 feet in height. The building is divided into two major sections: 1) the processing portion which includes the canyon craneway; and 2) the service and operating portion which includes the operating, pipe, and electrical galleries. The canyon cells contain the vessels and associated equipment in which all radioactive solutions entering the plant are processed. The radioactive or "hot" facilities are separated from the service area by massive concrete shielding. Operation of the equipment within the canyon cells is accomplished remotely from the operating gallery. Replacement or maintenance of "hot" equipment requires the use of the remotely operated canyon crane. Remote operation is discussed further in Chapter XII. Figures IX-4 and IX-5 illustrate a typical cross section of the building.

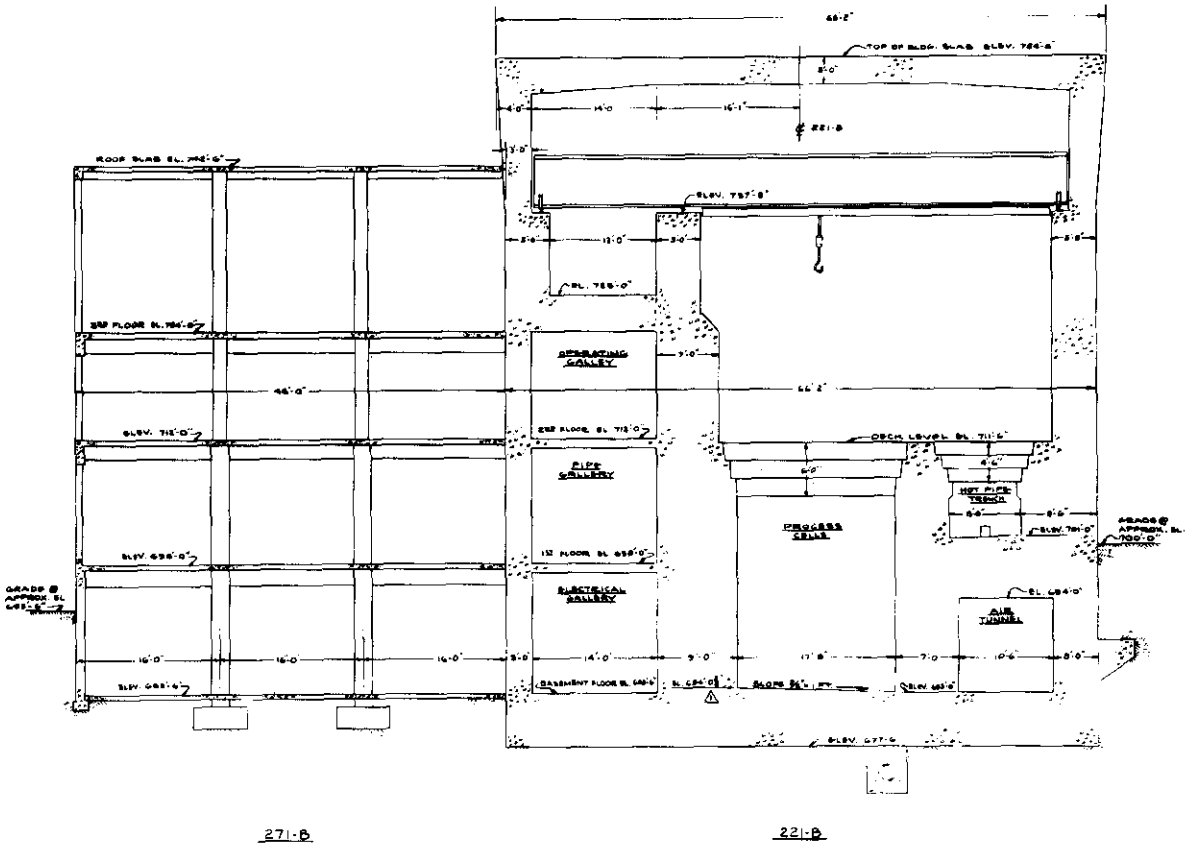

FIGURE IX-4

Cross Section of 221-B and 271-B Buildings
(Based on H-2-33099)

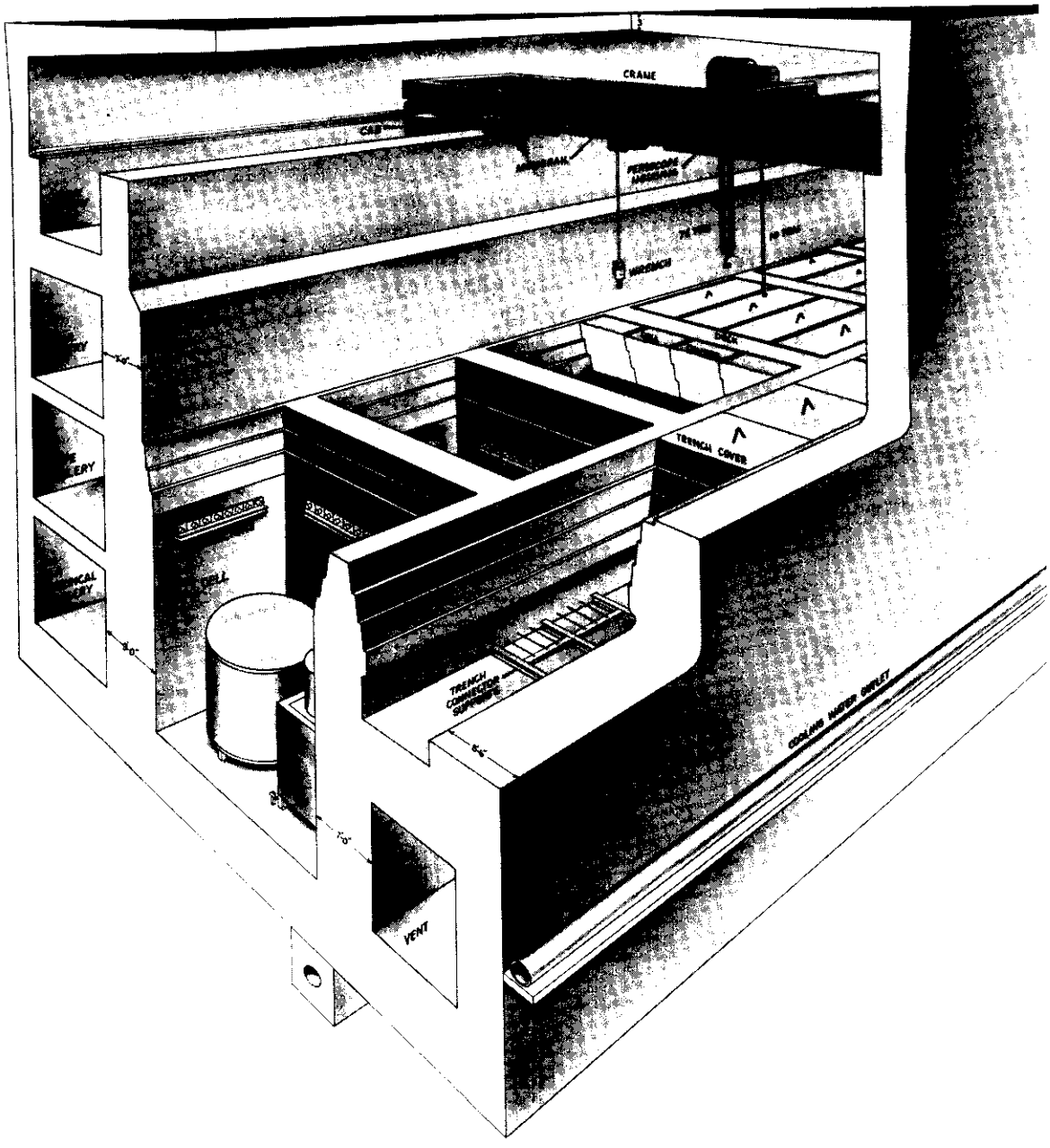

FIGURE IX-5
221-B Canyon Building

2. Canyon

2.1 Process Cells

The canyon consists of 40 equipment cells arranged in a single row running the length of the building. The standard canyon cell is 17 feet 8 inches long, 13 feet wide, and 22 feet high. Each cell is separated from its adjacent cell by a seven-foot thick concrete wall. The cells are equipped with specially designed six-foot thick concrete cover blocks. These cover blocks are designed to prevent the escape of airborne radioactive contamination from the cells to the canyon deck, as well as to provide shielding of the high intensity radiation emanating from the process equipment.

All lines which service the cells are buried in concrete and terminate in a row of "connector nozzles" on the cell walls nine feet below canyon deck level. The elevation of the canyon deck is 711 feet 6 inches, the cell nozzles are 702 feet 6 inches; and the pipe trench nozzles are 704 feet 2 inches. Equipment is placed on the cell floor and held in position by guides built into the cell, thus establishing a standard relationship between the wall connector nozzles and the vessels. This arrangement makes possible the prefabrication of replacement vessels, jumpers, and other equipment for any given location in the cell. The equipment locations and functions carried out in the various cells are shown elsewhere in this manual.

2.2 Pipe Trench

Also located in the canyon and running parallel to the process cells is the pipe trench. A large part of the piping through which inter-cell solution transfers are made is located in the pipe trench. The pipe trench is approximately 8 feet wide, 6 feet deep, and runs from Cell 5 through Cell 40. Lines from the cells pass through the concrete and terminate in connector nozzles in the trench. As in the cells, the piping is in prefabricated sections attached to the nozzles with connector heads. All pipes in the trench are sloped to permit proper drainage. The trench is accessible for remote maintenance via removable concrete cover blocks. Moisture, which may enter the trench from the canyon deck or from piping leaks in the trench itself, is collected in sumps which drain to adjacent process cells. The process cells in turn drain to Cell 10.

2.3 Air Tunnel

Located below the pipe trench is the ventilation air tunnel. Both process cell and vessel ventilating air leave the 221-B Building via this tunnel. The air tunnel measures 10-1/2 feet by 10-1/2 feet and extends from Cell 40 through Cell 5. From the 221-B Building the ventilation air is passed through either the high efficiency filter,

291-B, or the sand filter, 291, then through the exhaust fans. The exhaust fans discharge the ventilation air to the base of the 200-foot process stack.

3. Galleries

The electrical pipe, operating, and crane cab galleries are located at progressively higher levels on the north side of the 221-B Building. The galleries are approximately 14 feet wide and run the length of the building. The electrical, pipe, and operating galleries are isolated from the processing portion of the building by concrete shielding and are provided with an independent air supply. These areas are considered "cold side" zones. The crane cab gallery is open to the canyon and is therefore a regulated or "hot side" zone.

3.1 Crane Cab Gallery

A 75-ton electrically operated overhead railway crane is used for remote handling of equipment in the canyon portion of the building. This crane is provided with a shielded cab which operates behind a five-foot thick parapet wall, thus providing shielding against radiation. The area between the parapet wall and the outer structural wall of the building is known as the "Crane Cab Gallery" or "Craneway". The Crane Cab Gallery can be seen in Figures IX-4 and IX-5. A description of the crane is given in Chapter XII.

3.2 Operating Gallery

Most of the controls, instruments, and data recorders for the cell equipment are located in the operating gallery. Arranged along the length of the operating gallery is a series of panel boards from which control and instrument lines run to the equipment in the cells. Chemical addition "Scale Tanks" are provided at points along the operating gallery with inlet connections to appropriate chemical headers. The chemical makeups are weighed in the scale tanks and are either pumped or gravity-fed to the process vessels located in the canyon.

3.3 Pipe Gallery

The pipe gallery provides space for the non-radioactive piping which serves the in-cell equipment. As remote maintenance is not required in this area all connections are of the normal type. Chemical headers, electrical and steam distribution lines are also located in the pipe gallery.

3.4 Electrical Gallery

The electrical gallery is located in the lowest level of the building. The gallery floor is at the same elevation as the process

cell floor. The main electrical lines and electrical distribution centers are located in the electrical gallery. The main steam line entering the building is also located in this gallery.

4. 271-B Service Building

The 271-B Building is a four-story concrete structure approximately 160 feet long and 48 feet wide attached to the north or gallery side of the 221-B Building. The relationship of 221-B, 271-B, and other buildings in the B-Plant area is shown in Figure IX-6. A cross section of the 271-B Building is shown in Figure IX-5.

The basement floor or the building contains the maintenance and instrument shops, foremen offices, air compressors for building instrument and process air supply, filters for the building ventilation air supply, and electrical distribution panels for 271-B.
The second floor contains administrative and supervisory offices, lunch room facilities, and the dispatcher's office. The communications facilities, which are used for controlling the movement of material and personnel in the building, are located in the dispatcher's office. All magnetically locked doors giving access to the canyon area are controlled from the dispatcher's office.

The third floor contains the bulk of the chemical makeup head tanks and is referred to as the Aqueous Makeup area or AMU. Office space and additional dry chemical storage are also found on this floor.

5. Building Ventilation

The 271-B and 221-B Buildings contain five separate and distinct ventilation systems. One system ventilates the 271-B Service Building; one system ventilates the operating portion of the 221-B Building; a third system supplies ventilation to the process equipment areas of 221-B, while the final two systems ventilate the process vessels themselves. This section describes the building ventilation systems. The vessel vent system is described in the following section. All systems are designed to ensure the flow of air away from the operating and service areas toward the processing areas.

5.1 271-B Ventilation

The 271-B ventilation system is designed around a 59,000 cfm Buffalo Supply Unit. Fresh air is drawn into the building through a vertical duct near the roof. The air passes down through a dry filter, then flows successively through a preheater, a wet filter, and a reheater. The filtered air is fed through supply ducts to the various offices, shops, and corridors in the building. From 271-B a portion

of the air is discharged to atmosphere through blower fans on each level. The remaining flow is into the operating, pipe, and electrical galleries in 221-B.

5.2 221-B Operating Area Ventilation

Ventilation of the operating areas in 221-B is accomplished by feeding fresh, dust-free air from 10 air filtering and heating units distributed along the operating gallery. Each of these units has a capacity of approximately 4500 cfm. This air is joined in the operating gallery by that flowing in from 271-B, and passes through gratings in the floor to the pipe gallery. Air is exhausted to atmosphere from the pipe gallery through nine exhaust fans distributed along its length. The discharge from the electrical gallery is by three exhaust fans.

5.3 221-B Processing Area Ventilation

The ventilation of the process areas is accomplished by feeding fresh, dust-free air from 10 separate 4500 cfm filtering and heating units to various points along the craneway. The air flows over the craneway parapet wall and down to the canyon deck. It is then drawn through calibrated openings around the cover blocks into the pipe trench and process cells. From the process cells and pipe trench air is pulled into the air tunnel through openings in each cell and each section of the pipe trench. As originally constructed, the process cells were connected to the air tunnel by one 10-inch duct in each cell. To prevent significant escape of airborne contamination from an open cell, 12 new 14-inch ventilation openings were provided from each cell. The new ventilation openings, totaling 12 square feet cross sectional area, provides an air flow rate of 37,500 cfm (160 fpm) through an open cell. Total air flow through the canyon is 37,500 cfm with all cell blocks in place and 75,000 cfm with a cell open.

Exhaust air from the process areas passes through the air tunnel to the 291-B exhaust filter. From the filter the air is discharged via the exhaust fans to the 200-foot process stack. A ventilation diagram of the service, operating, and process areas is shown in Figure IX-7.

5.4 291-B Exhaust Filter

The 291-B Exhaust filter enclosure is a buried concrete structure approximately 51 feet in length, 32 feet wide, and 22 feet high. The existing structure contains two filter cells; the one in use and a spare cell. A cell contains four panels of 40, two feet by two feet absolute (CWS) filters arranged such that the air must pass through two banks of filters before being discharged. In addition to the two banks of absolute filters, a prefilter is located just upstream from the first filter bank. The prefilter consists of one hundred five Varicel-90 filters 20 x 25 x 6 fronted by a glass fiber pad called a Renu Filter*. The prefilters are

* Varicel and Renu are trade names of the American Air Filter Company, Louisville, Kentucky.

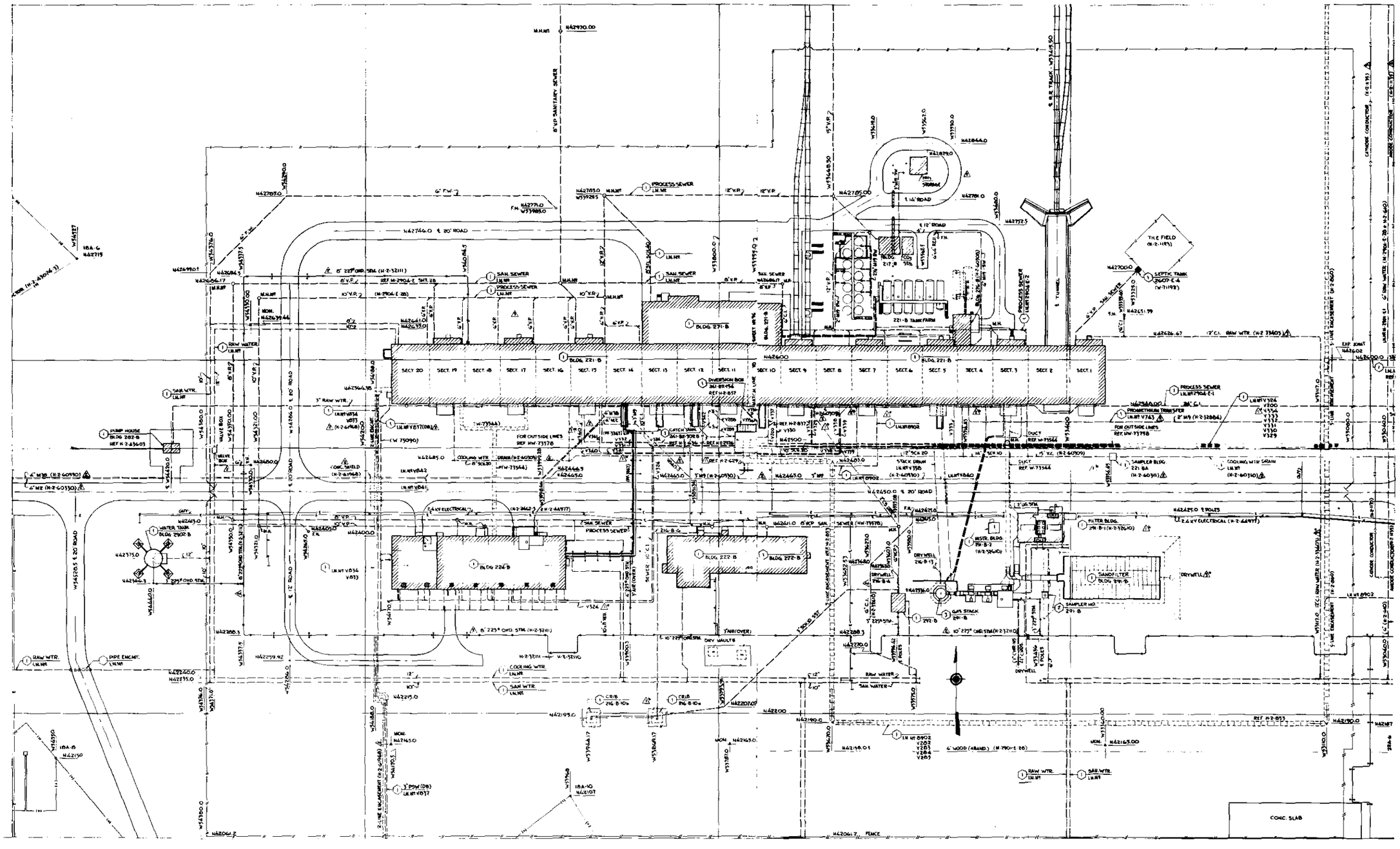

FIGURE IX-6

Plot Plan of B-Plant Area

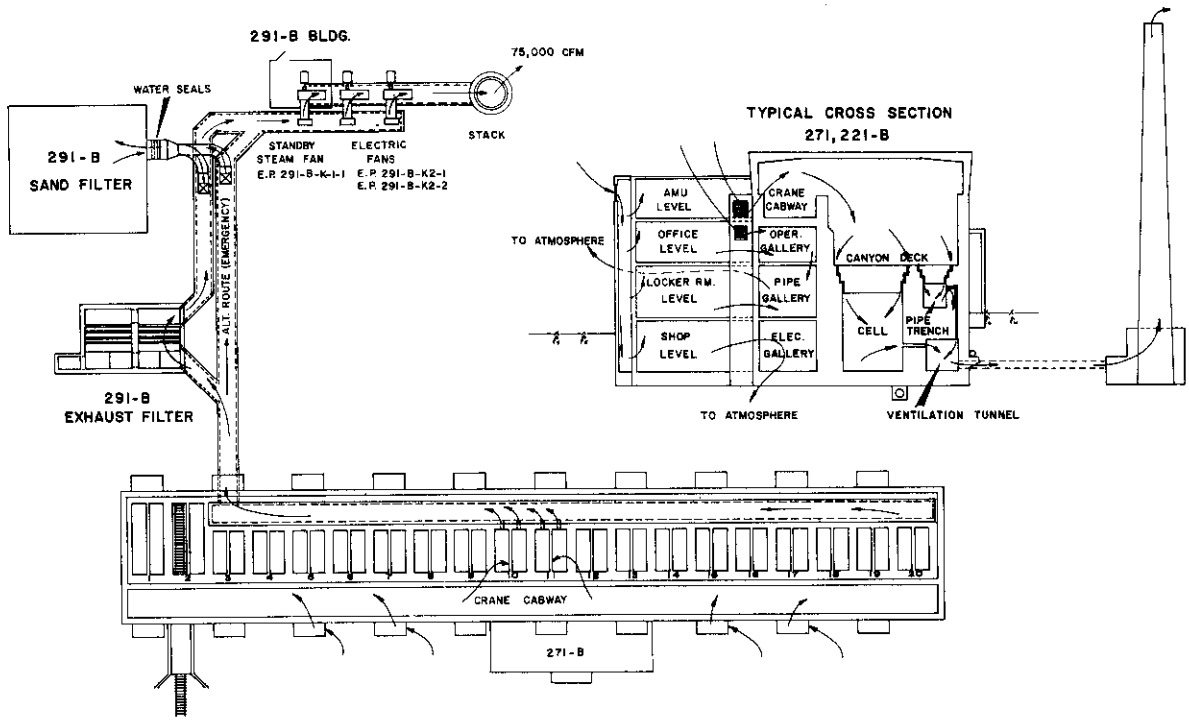

FIGURE IX-7

Ventilation Diagram
B-Plant Processing and Service Areas

arranged in three panels. The lower panel which is 11 units wide and five units high is stationary. The two upper panels which are five units high and five units wide may be lowered in front of the lower panel, similar to a window sash, removing the upper prefilters from the air stream. The prefilters will be lowered when the pressure drop across it becomes excessive. The Exhaust Filter enclosure is designed to permit the isolation of cells containing plugged or ruptured filters and the activation of the next cell through the use of water seals. Additional cells may be constructed as needed. An isometric view of the Exhaust Filter is shown in Figure IX-8, however, the prefilters have not been included in the drawing.

5.5 291-B Sand Filter

The 291-B Sand Filter was constructed for use in conjunction with the operation of the $BiPO_4$ process in 221-B. It is designed for updraft air flow through a multi-layered filter media of graded sand and gravel. The buried concrete filter housing has been left intact and in the event of a sudden or unexpected failure of the absolute filters, the sand filter may be reactivated through the use of water seals; however, air flow from 221-B would be reduced to approximately 37,500 cfm. More complete details of the sand filter may be found in Drawings H-2-1377, H-2-1379 and H-2-1477.

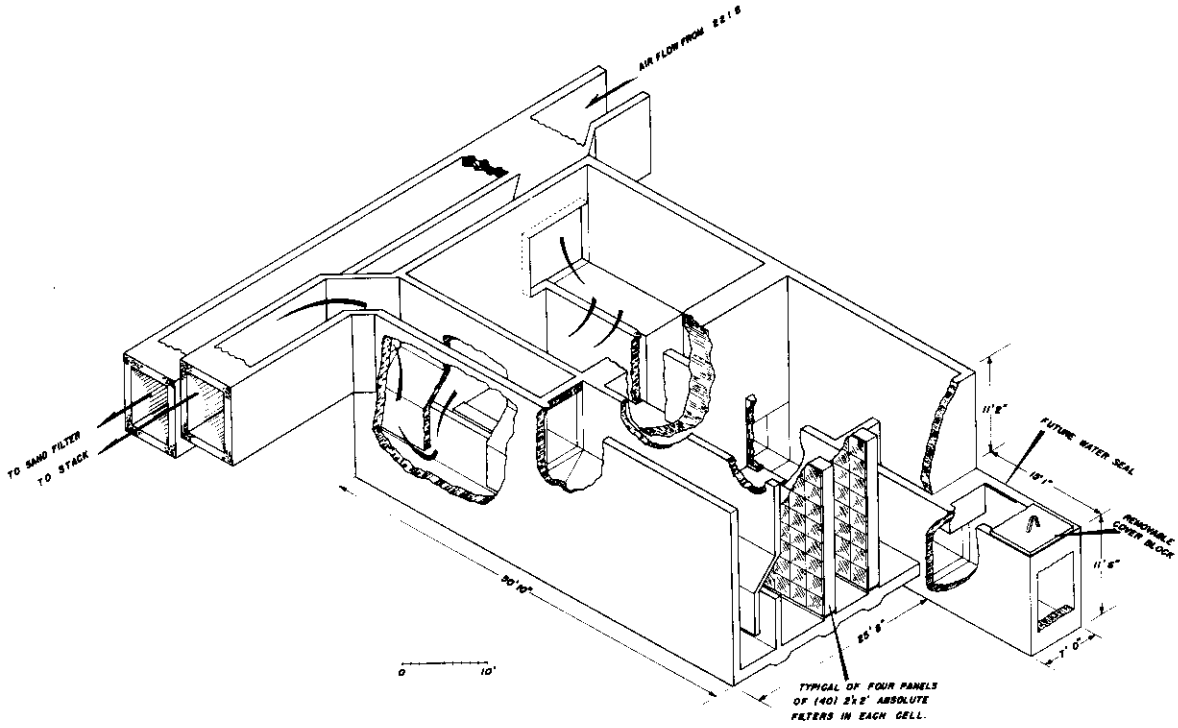

FIGURE IX-8

291-B Exhaust Filter

5.6 291-B Exhaust Fans and Process Stack

The ventilation air from the 221-B is exhausted through a buried duct by fans located in the 291-B area. Two direct drive centrifugal fans, each rated at 37,500 scfm are used for the exhaust system. Each fan is equipped with a radial inlet damper which is used to control the air flow to the fan. The fans are driven by 100 HP, 440 V electric motors and are operated at 1175 rpm. A steam-driven fan, which also has a capacity of 37,500 scfm, serves as an emergency standby in the event of a power or mechanical failure of the electric fans. A vacuum control on the inlet duct automatically starts the steam turbine should the vacuum within the duct drop below 0.2 inch of water.

The ventilation air is discharged to the atmosphere from the top of a 200-foot reinforced concrete stack located adjacent to the fans. The stack is lined with a 5-foot ID acid-proof brick liner. Drainage in the stack is collected in a stainless steel sump pan at the base of the stack, and routed to a crib.

6. B-Plant Vessel Vent Systems

The B-Plant vessel vent equipment is located in Cell 22 and consists of two separate systems. The first system (Vessel Vent No. 1) is designed to vent and filter the gases from those process vessels which do not contain ammonia via Vent Header No. 22. The second system (Vessel Vent No. 2) is designed to vent, scrub, and filter gases from process vessels in which ammonia is present via Vent Header No. 146. A schematic of the Vessel Vent Headers is shown in Figure IX-9. Figure IX-10 is a schematic of the equipment in Cell 22.

6.1 Vessel Vent System No. 1

The vessel vent equipment for the No. 1 system is composed of a steam heater (E-22-3), a high efficiency filter assembly (F-22-5), a steam or air-operated jet (J-22-4), a condenser (E-22-4), a condensate receiving tank (TK-22-1), and a recycle drain pump (PA-22-1). Vent air from the process vessels enters the heater via Header 22 where it is heated above its saturation temperature before entering the filter assembly. In the filter assembly the dry gases are filtered through two banks of high efficiency - absolute type (CWS) filters, then pass to the 1200 cfm jet which discharges to the condenser. Condensible vapors are removed from the gas stream and the non-condensibles are discharged to the air tunnel. The condensed vapor drains into the condensate receiving tank where it is used as recirculating fluid for the Vessel Vent No. 2 ammonia scrubber tower. Excess condensate is pumped to the 216-B-12 crib.

6.2 Vessel Vent System No. 2 (Ammonia present)

The vessel vent equipment for the No. 2 system is composed of an ammonia scrubber tower (T-22-2), a condensate receiving tank (TK-22-1), a recirculating-drain pump (PA-22-1), a steam heater (E-22-7), a prefilter (F-22-6), three high efficiency filter assemblies (F-22-8-1, F-22-8-2, and F-22-9), and a steam or air operated jet (J-22-9). The condensate receiving tank and recirculating-drain pump are common to both vent systems. Contaminated gases from ammonia process vessels enter the ammonia scrubber tower via Header 146. The ammonium carbonate absorber tower in Cell 21 is also vented to the ammonia scrubber tower. Ammonia is scrubbed from the vent gases with condensate from the condensate receiver tank. Gases from the ammonia scrubber tower pass through the heater which raises the temperature of the gas above its saturation temperature and enters the prefilter. The prefilter, a multi-layered fiber glass filter, removes coarse particles from the gas prior to passage through the high efficiency filters. Two stages of double-banked high efficiency - absolute type (CWS) filters are used to assure adequate removal of radionuclide particles from the gas. The first stage high efficiency filter, located in Cell 22, consists of two double CWS filters connected in parallel. The second stage high efficiency filter

is located in a pit behind the 221-B Building adjacent to Cell 22 and consists of one double CWS filter. From the filters the gases pass through a 125 cfm jet also located in the pit behind the 221-B Building. The jet discharges to the 24-inch sewer going to the retention basins.

7. Chemical Tank Farm 211-B

The Chemical Tank Farm 211-B is located north of the 271-B Building and contains bulk storage facilities for many chemicals used in the Waste Fractionization processes. Also contained in this area is the Demineralizer Facility for process water (217-B). A plot plan of the chemical storage area is illustrated in Figure IX-11 Table IX-5 lists the chemical storage tanks by number, capacity, use, service pump number, and tanks and headers served directly by the tank.

TABLE IX-5

CHEMICAL STORAGE TANKS IN 211-B CHEMICAL TANK FARM

Tank	Volume	Chemical	Pump	Headers and Tanks Served
SA-101 SA-102 SA-103	8,000 8,000 8,000	57% Nitric Acid	PSA-5 PSA-6	309 Header, Tanks H302, H303, H304, H309, H318, H319, H321, and H501
SF-120 SF-121 SF-122	8,000 8,000 8,000	70% Hydroxyacetic Acid	PSF-3 PSF-4	Tank H502
ST-131 ST-132 ST-133	8,000 8,000 8,000	41% HEDTA	PST-15 PST-16	Tank H503
SQ-141 SQ-142 SQ-143	18,000 18,000 18,000	50% NaOH	PSQ-8	217 Bldg., 310-311 Header, Tanks H102, H301, TK301-1, H302, H303, H304, H305, H310, H311, TK402-1
MNB-173	18,000	Ammonium Carbonate (Make-up Tank)	PSN-7 PSN-7A	173 Header
SE-125 SE-126 SE-127 SE-128	8,000 8,000 8,000 8,000	40% NTA	PSE-19 PCE-10	Tanks H315 and H316. (SE-128 is unlagged and used only as reserve.)
SD-111	18,000	Demineralized Water	PSD-18	111 Header
SN-172	12,200	Anhydrous Ammonia	--	MNB-173, 172 Header
SB-191	24 Ton	Carbon Dioxide	--	MNB-173, 191 Header
SO-151 SO-152	20,000 11,500	n-paraffin hydrocarbon	PSO-22	MO-154
SK-161	11,500	Spare		

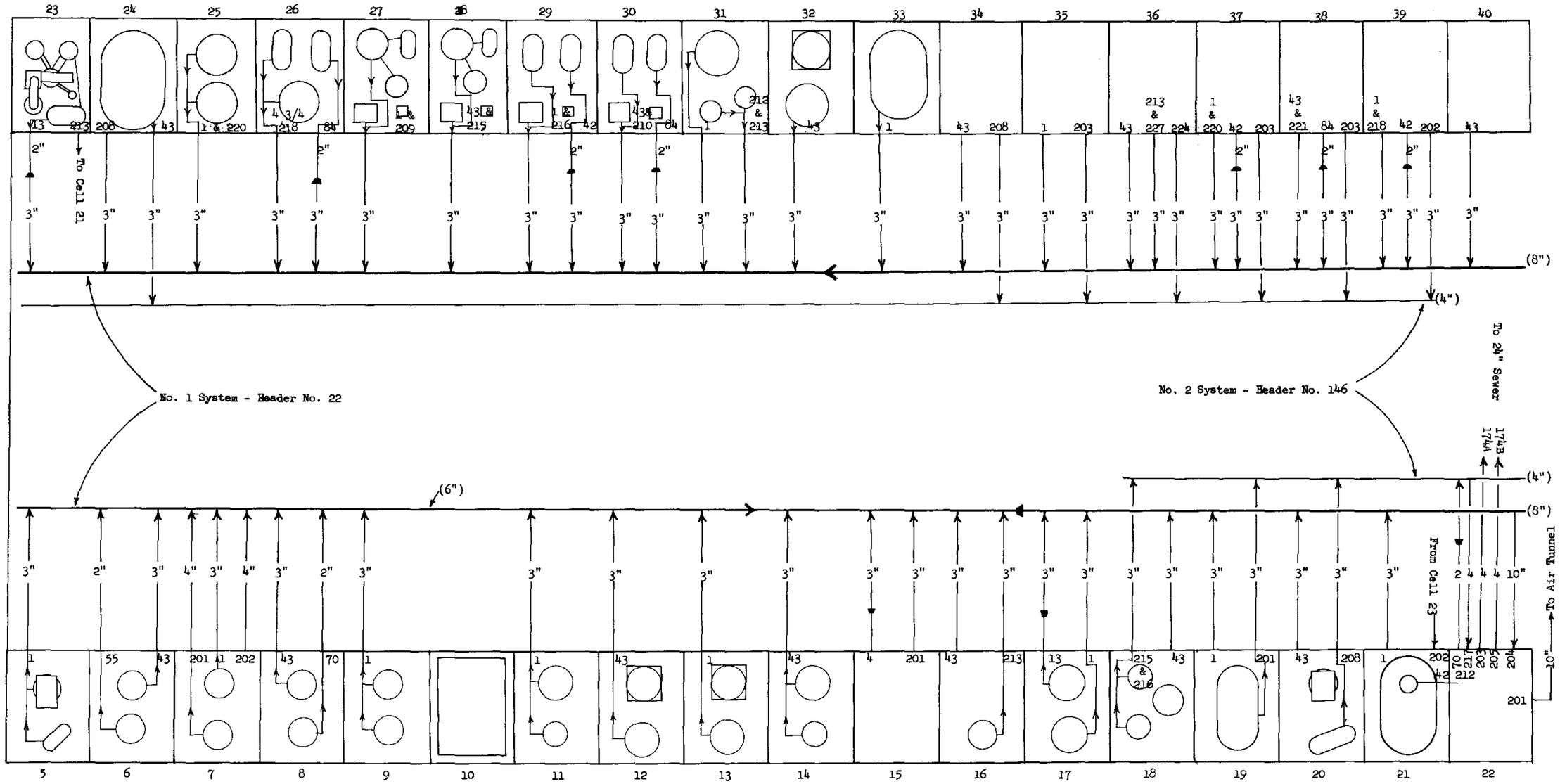

FIGURE IX-9

Vessel Vent Systems

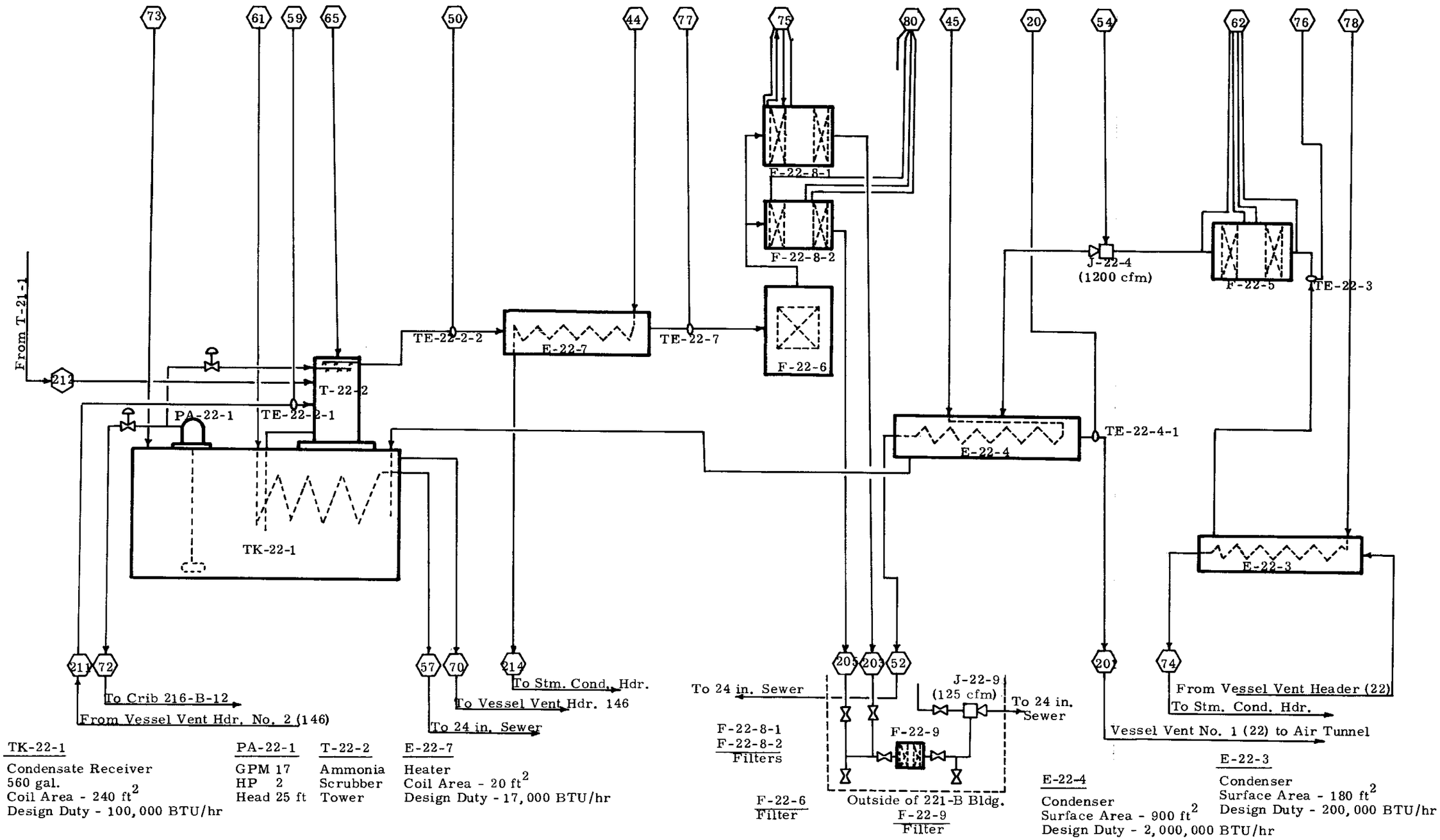

FIGURE IX-10

Cell 22 Vessel Vent Equipment