1248432
(00662541)

SGW-41327
Revision 0

Data Quality Objectives Summary Report for the Soil Desiccation Pilot Test

Prepared for the U.S. Department of Energy
Assistant Secretary for Environmental Management

Contractor for the U.S. Department of Energy
under Contract DE-AC06-08RL14788

CH2MHILL
Plateau Remediation Company

P.O. Box 1600
Richland, Washington 99352

Approved for Public Release;
Further Dissemination Unlimited

RECEIVED
MAR 06 2018
EDMC

SGW-41327
Revision 0

Data Quality Objectives Summary Report for the Soil Desiccation Pilot Test

Document Type: TR Program/Project: S&GRP

Date Published
November 2009

Prepared for the U.S. Department of Energy
Assistant Secretary for Environmental Management

Contractor for the U.S. Department of Energy
under Contract DE-AC06-08RL14788

CH2MHILL
Plateau Remediation Company

P.O. Box 1600
Richland, Washington

L E Bratton 12/1/2009
Release Approval Date

Approved for Public Release;
Further Dissemination Unlimited

TRADEMARK DISCLAIMER

Reference herein to any specific commercial product, process, or service by trade name, trademark, manufacturer, or otherwise, does not necessarily constitute or imply its endorsement, recommendation, or favoring by the United States Government or any agency thereof or its contractors or subcontractors.

This report has been reproduced from the best available copy.

Printed in the United States of America

Contents

1. Step 1 – State the Problem 1-1

1.1 Introduction 1-1
1.2 Project Scope 1-1
1.3 Project Objectives 1-5
1.4 Project Assumptions 1-5
1.5 Project Issues 1-5
1.5.1 Global Issues 1-6
1.5.2 Project Technical Issues 1-6
1.6 Background Information 1-6
1.6.1 Data Quality Objective Team Members 1-6
1.7 Contaminants of Potential Concern 1-9
1.7.1 Other Constituents and Parameters of Interest 1-9
1.8 Project Schedule 1-10
1.9 Conceptual Site Model 1-11
1.10 Concise Statement of the Problem 1-13

2. Step 2 – Identify the Decision 2-1

3. Step 3 – Identify the Inputs to the Decision 3-1

3.1 Comprehensive Environmental Response, Compensation, and Liability Act of 1980 Data Needs 3-1
3.1.1 Threshold Criteria: Protectiveness and Applicable or Relevant and Appropriate Requirements 3-1
3.1.2 Long-Term Effectiveness and Permanence 3-3
3.1.3 Reduction of Volume, Mobility, or Toxicity 3-4
3.1.4 Short-Term Effectiveness 3-5
3.1.5 Implementability 3-5
3.1.6 Cost 3-5
3.2 Summary of Numerical Modeling to Support the Desiccation Treatability Test 3-6
3.2.1 Simulations to Support Selection of Appropriate Desiccation Performance Targets 3-6
3.2.2 Simulations to Support Desiccation Design and Implementation 3-6
3.3 Summary of Laboratory Efforts to Support the Desiccation Treatability Test 3-7
3.4 Test Performance Data 3-8
3.5 Basis for Setting the Preliminary Action Level 3-8
3.6 Information Required to Resolve Decision Statements 3-8
3.6.1 Data Gap Analysis 3-8

3.7 Field and Analytical Methods 3-8
3.8 Analytical Performance Requirements 3-21
4. Step 4 – Define the Boundaries of the Study 4-1
4.1 Objective 4-1
4.2 Define the Boundaries of the Study 4-1
4.3 Scale of Decision Making 4-6
4.4 Practical Constraints 4-7
5. Step 5 – Develop a Decision Rule 5-1
5.1 Inputs Needed to Develop Decision Rules 5-1
5.2 Decision Rules 5-2
6. Step 6 – Specify Tolerable Limits on Decision Errors 6-1
6.1 Uncertainty Discussion 6-1
7. Step 7 – Optimize the Design 7-1
7.1 Purpose 7-1
7.2 Optimize the Design 7-1
7.3 Sampling Objectives 7-1
7.4 Non-Statistical Implementation Design 7-3
7.4.1 Sampling Priorities 7-11
7.4.2 Potential Sample Design Limitations 7-12
8. Observations 8-1
9. References 9-1

Figures

Figure 1-1. Hanford Site General Map 1-2
Figure 1-2. Distribution and Layout of BC Cribs and Trenches Area Waste Sites 1-3
Figure 1-3. Distribution of Technetium-99 and Nitrate in the C5923 Borehole (Well 299-E13-62) 1-12
Figure 4-1. Distribution of Zones for Targeted Monitoring 4-3
Figure 7-1. Tentative Layout of Soil Desiccation Pilot Test Wells and Monitoring Holes 7-8

Tables

Table 1-1. Data Quality Objectives Workshop Team Members 1-7
Table 1-2. Data Quality Objective Key Decision Makers 1-7
Table 1-3. Applicable Documents and Data Sources (2 pages) 1-8
Table 1-4. Constituents and Parameters of Interest 1-10
Table 1-5. Project Schedule 1-11
Table 1-6. Preliminary Conceptual Contaminant Distribution Model Discussion (2 pages) 1-11
Table 1-7. Concise Statement of the Problem 1-13
Table 2-1. Summary of Data Quality Objective Step 2 Information (2 pages) 2-1
Table 3-1. Key Target Parameters for Desiccation Treatability Testing for Use in Improving Desiccation Modeling/Analysis for the Feasibility Study (2 pages) 3-2
Table 3-2. Issues and Resolution for Long-Term Effectiveness and Permanence 3-4
Table 3-3. Issues and Resolution for Reduction of Toxicity, Mobility, or Volume 3-5
Table 3-4. Issues and Resolution for Short-Term Effectiveness 3-5
Table 3-5. Issues and Resolution for Cost 3-6
Table 3-6. Basis for Setting Test Goals (9 pages) 3-9
Table 3-7. Required Information and References 3-18
Table-3-8. Sediment Information Required to Resolve the Decision Statements (3 pages) 3-19
Table 3-9. Details on Identified Computational Methods 3-21
Table 3-10. Sediment Analytical Performance Requirements (2 pages) 3-21
Table 3-11. Additional Physical and Geochemical Analyses of Borehole Sediment Samples for Characterizing the Soil Desiccation Pilot Test Site Model (2 pages) 3-22
Table 3-12. Condensate Analytical Performance Requirements 3-24
Table 4-1. Characteristics that Define the Population of Interest 4-1
Table 4-2. Geographic Boundaries of the Investigation 4-2
Table 4-3. Strata with Similar Characteristics (2 pages) 4-4
Table 4-4 Temporal Boundaries of the Investigation 4-5
Table 4-5. Scale of Decision Making 4-6
Table 4-6. Practical Constraints on Data Collection 4-7
Table 5-1. Decision Statements 5-1
Table 5-2. Inputs Needed to Develop Decision Rules 5-2
Table 5-3. Decision Rules 5-3
Table 6-1. Relative Uncertainty Ranking for Study Decisions (2 pages) 6-1
Table 7-1. Determine Data Collection Design 7-1
Table 7-2. Characterization Goals and Drivers (2 pages) 7-2
Table 7-3. Sampling and Data Collection Design (2 pages) 7-5
Table 7-4. In Situ Instrumentation 7-6
Table 7-5 In Situ Instrumentation Locations and Basis (2 pages) 7-9

Table 7-6. Data Collection Logic (2 pages) 7-10
Table 7-7. Aboveground Sampling/Data Collection 7-11

This page intentionally left blank.

Terms

AA	alternative action
AEA	alpha energy analysis
ARAR	applicable or relevant and appropriate requirement
ASTM	American Society for Testing and Materials
bgs	below ground surface
CAS	Chemical Abstract Services
CERCLA	*Comprehensive Environmental Response, Compensation, and Liability Act of 1980*
cfm	cubic feet per minute
CHPRC	CH2M Hill Plateau Remediation Company
COC	contaminant of concern
COPC	contaminant of potential concern
CSM	conceptual site model
DOE	U.S. Department of Energy
DPT	direct-push technology
DQO	data quality objective
DR	decision rule
DS	decision statement
Ecology	Washington State Department of Ecology
EPA	U.S. Environmental Protection Agency
ERC	electrical resistivity correlation
ERT	electrical resistivity tomography
FY	fiscal year
IC	ion chromatography
ICP	inductively coupled plasma
GEA	gamma energy analysis
GPR	ground-penetrating radar
LSC	liquid scintillation counting
MDC	minimum detectable concentration
MS	mass spectroscopy

OU	operable unit
PNNL	Pacific Northwest National Laboratory
PSQ	principal study question
RCRA	*Resource Conservation and Recovery Act of 1976*
STOMP	Subsurface Transport Over Multiple Phases

Metric Conversion Chart

Into Metric Units			Out of Metric Units		
If you know	*Multiply by*	*To get*	*If you know*	*Multiply by*	*To get*
Length			**Length**		
inches	25.40	millimeters	millimeters	0.0394	inches
inches	2.54	centimeters	centimeters	0.394	inches
feet	0.305	meters	meters	3.281	feet
yards	0.914	meters	meters	1.094	yards
miles (statute)	1.609	kilometers	kilometers	0.621	miles (statute)
Area			**Area**		
sq. inches	6.452	sq. centimeters	sq. centimeters	0.155	sq. inches
sq. feet	0.0929	sq. meters	sq. meters	10.764	sq. feet
sq. yards	0.836	sq. meters	sq. meters	1.196	sq. yards
sq. miles	2.591	sq. kilometers	sq. kilometers	0.386	sq. miles
acres	0.405	hectares	hectares	2.471	acres
Mass (weight)			**Mass (weight)**		
ounces (avoir)	28.349	grams	grams	0.0353	ounces (avoir)
pounds	0.453	kilograms	kilograms	2.205	pounds (avoir)
tons (short)	0.907	ton (metric)	ton (metric)	1.102	tons (short)
Volume			**Volume**		
teaspoons	5	milliliters	milliliters	0.034	ounces (U.S., liquid)
tablespoons	15	milliliters	liters	2.113	pints
ounces (U.S., liquid)	29.573	milliliters	liters	1.057	quarts (U.S., liquid)
cups	0.24	liters	liters	0.264	gallons (U.S., liquid)
pints	0.473	liters	cubic meters	35.315	cubic feet
quarts (U.S., liquid)	0.946	liters	cubic meters	1.308	cubic yards
gallons (U.S., liquid)	3.785	liters			
cubic feet	0.0283	cubic meters			
cubic yards	0.764	cubic meters			
Temperature			**Temperature**		
Fahrenheit	(°F-32)*5/9	Centigrade	Centigrade	(°C*9/5)+32	Fahrenheit
Radioactivity			**Radioactivity**		
picocurie	37	millibecquerels	millibecquerels	0.027	picocurie

This page intentionally left blank.

1. Step 1 – State the Problem

The purpose of data quality objective (DQO) Step 1 is to state the problem clearly and concisely and to ensure that the focus of the study is unambiguous.

1.1 Introduction

This DQO summary report has been developed to guide the design and performance of a soil desiccation pilot-scale treatability test. The soil desiccation pilot test is one element of the *Deep Vadose Zone Treatability Test Plan for the Hanford Central Plateau* (DOE/RL-2007-56). The objective of the soil desiccation treatability test is to determine if the mobility of contaminants (e.g., technetium-99 and nitrate) can be significantly lessened by removing a significant portion of the sediment porewater associated with those contaminants. If the transport of inherently mobile contamination can be sufficiently slowed by reducing the driving force for downward migration, the threat to groundwater will be reduced.

The soil desiccation pilot test will be conducted in the BC Cribs and Trenches waste site area where the largest vadose zone inventory of technetium-99 contamination on the Hanford Site (Figures 1-1 and 1-2) has been identified. Recently, additional characterization in the BC Cribs and Trenches has been performed from boreholes for electrical resistivity correlation (ERC) validation that confirms this. Figure 1-2 also shows the locations of the boreholes installed and sampled to "ground truth" the ERC data. The BC Cribs and Trenches area was selected because the waste sites contain mobile contamination that is held up in the vadose zone. A contaminated site (rather than a "clean" site) was selected to accelerate the overall assessment of soil desiccation as a potential remediation technology. In anticipation of this decision, the three boreholes installed in fiscal year 2008 (FY08) to ground truth the electrical resistivity characterization data previously collected were completed with screen intervals to permit the boreholes to function as vapor injection/extraction wells. The screen intervals were located to intersect a relatively shallow region of high moisture and contamination in each case. The focus was on the shallow portion of the vadose zone to facilitate potential pilot testing.

1.2 Project Scope

The treatability test plan for remediation of technetium-99 and uranium in the deep vadose zone (DOE/RL-2007-56) was issued in March 2008. Testing of deep vadose zone technologies described in this plan will be conducted to satisfy the requirements of the *Comprehensive Environmental Response, Compensation, and Liability Act* (CERCLA).

The testing will be conducted to obtain data to provide a technical basis to evaluate the viability of candidate technologies as part of a remedy in subsequent remedial alternative assessments. The strategy focuses on testing the most promising in situ treatment and surface barrier technologies. Each of these technologies requires additional information prior to making decisions about their full-scale use at Hanford.

Testing of the soil desiccation technology will occur first, with an initial emphasis on technetium-99 contamination. Desiccation testing is also relevant to other contaminants and will provide key information about applying a gas-phase technology in the deep vadose zone at Hanford. The overall objectives of the soil desiccation treatability test are as follows:

Figure 1-1. Hanford Site General Map

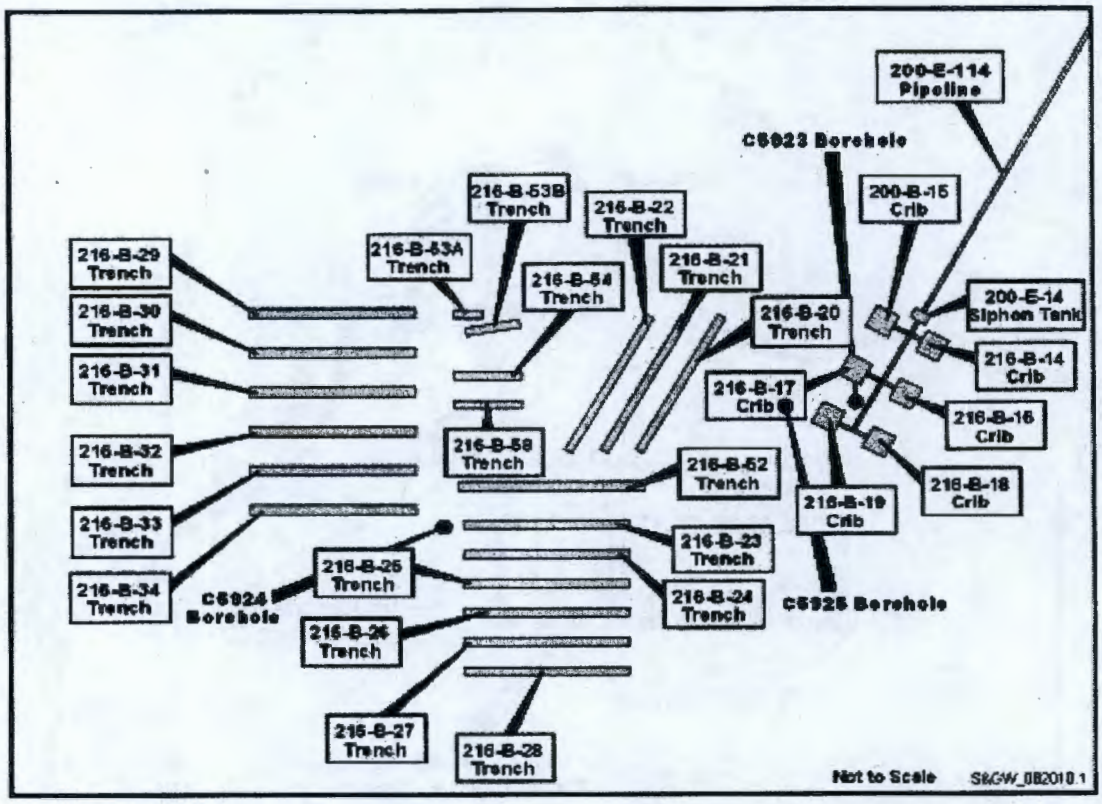

Figure 1-2. Distribution and Layout of BC Cribs and Trenches Area Waste Sites

- Determine the design parameters for applying soil desiccation, including operational parameters such as air flow rate and injected air properties (e.g., temperature and humidity), and identifying soil moisture-reduction targets to achieve acceptable reduction of contaminant transport in the vadose zone.
- Demonstrate field-scale desiccation for targeted areas within the vadose zone:
  - Quantify the air flow, water extraction rate, and other operational parameters to evaluate the implementability of the process on a large scale
  - Determine the extent of soil moisture reduction in the targeted treatment zone to evaluate the short-term effectiveness of the process.
  - After desiccation is completed, determine the rate of change in soil moisture for the desiccated zone.
  - Determine the best types of instrumentation for monitoring key subsurface and operational parameters to provide feedback to operations and for evaluating long-term effectiveness.
- Determine the number of injection and extraction wells, screened intervals, type of equipment and instrumentation, and operational strategy so costs for full-scale application can be effectively estimated.

Some elements of soil desiccation do not need to be evaluated by further testing based on basic vadose zone transport principles, recent laboratory tests, and associated numerical simulations:

- Desiccation should focus on strata containing relatively high concentrations of both moisture and contaminants. Focusing on strata containing only high moisture may be beneficial if this water significantly adds to the driving force for moving contaminated water toward the groundwater.
- Desiccation of strata adjacent the water table is not advised because the vacuum created by the extraction well(s) would likely cause local upwelling of the groundwater and preferentially interact with the groundwater instead of the sediment porewater. Also, the groundwater provides a zone of high water content that can be drawn up into the desiccated zone by capillary action.
- Uneven desiccation resulting from preferential gas flow paths may not have a significant adverse impact from a large-scale perspective because there is a discontinuous path for vertical water migration caused by the horizontal layering of lower and higher permeability materials. Additionally, higher moisture content remaining within low-permeability regions will have a relatively lower water matric potential that will inhibit movement, even though the moisture content may be higher than surrounding high-permeability layers.
- Increasing the subsurface gas flow rate will increase the quantity of sediment porewater that is removed unless there are significant "short circuits" from the injection point to the extraction point that develop.
- Drying the injected gas will increase its capacity to remove sediment porewater.
- Heating the injected gas will increase its capacity to remove sediment porewater.

The soil desiccation pilot test will be conducted at the BC Cribs and Trenches. This site was selected because it is known to have technetium-99 contamination in the vadose zone, and significant characterization data for the vadose zone are available. Previous characterization efforts have included electrical resistivity measurements to characterize the subsurface distribution of contaminants in three dimensions and with limited physical sampling. Additional characterization performed at the selected field test site revealed that sediment properties observed at the C5923 borehole do extend laterally with a horizontal correlation similar to that observed at the nearby Sisson and Lu vadose zone test site, and similarly to the correlation coefficient used in the numerical model.

The soil desiccation pilot test will focus on borehole C5923 (well 299-E13-62) to induce air flow within the targeted depth interval. Based on existing characterization data, tentative depths and locations for direct-push installation of pressure probes and gas sampling wells were installed for use in conducting initial air permeability and gas distribution tests at the targeted interval. This set of wells and associated monitoring locations were installed and used to collect site-specific characterization parameters.

Key information to be collected and compiled in this effort includes the following:

- Air permeability of likely targeted desiccation depth interval
- Heterogeneity, especially in terms of the distribution of sandy and silty layers within the likely targeted desiccation depth interval
- Intrinsic properties of key sediment types
- Moisture content distribution

- Permeability-moisture content relationships
- Contaminant distribution
- Surface features that may constrain field testing (including configuration of existing wells)
- Extracted air humidity, volumetric flow rate, temperature, pressure, and contamination content.

It should be noted that high concentrations of mobile contamination (technetium-99) and moisture are present at relatively shallow depth, which is accessible using the inexpensive direct-push technology (DPT). Thus, the pilot test is planned to focus on the 9.1 to 18 m (30 to 50 ft) below ground surface (bgs) area of well 299-E13-62.

1.3 Project Objectives

The project objectives are as follows:

- Design the soil desiccation pilot test and define data collection needs for the test to meet the objectives outlined in Section 1.2.
- Update the conceptual site model (CSM).

1.4 Project Assumptions

Project assumptions for this DQO process include the following:

- The DQO process will follow *Guidance on Systematic Planning Using the Data Quality Objectives Process*, EPA QA/G-4 (EPA/240/B-06/001), as modified in this report and GRP-EE-01-1.2, *Environmental Investigations Procedures*, Procedure 1.2, "Data Quality Objectives."
- This test will be performed in a shallow (approximately 9.1 to 18 m [30 to 50 ft]) contaminated portion of the BC Cribs and Trenches and will focus on borehole C5923 (well 299-E13-62).
- The focus is on removal of sediment porewater to slow the transport of mobile contaminants
- Additional data uses to be considered include refining the preliminary conceptual contaminant distribution model(s) and ensuring worker health and safety.
- The BC Cribs and Trenches investigation-derived waste DQO (SGW-34277, *Waste Control Plan for the BC Cribs and Trenches Area in the 200-BC-1 OU*), as amended by TPA Change Notice TPA-CN-251, will be used for designation of wastes that are generated during this characterization effort and may be revised as necessary.
- Supplemental sampling requirements that result from integration efforts with other projects are not addressed by this DQO effort.
- Modeling uncertainty will be reduced based on the characterization data obtained during the treatability test.

1.5 Project Issues

Project issues include the global issues that transcend the specific DQO project and the technical issues that are unique to the project. Both global and project technical issues have the potential to impact the sampling design or the DQOs for the project.

1.5.1 Global Issues

No global issues have been identified for this project.

1.5.2 Project Technical Issues

The technical issues for the project are as follows:

- The diameter of existing injection well 299-E13-62 will limit the air injection rate.
- Because short circuiting the air flow from the ground surface to the extraction well(s) is predicted from numerical simulations, an impermeable surface barrier is necessary during the treatability test.
-

1.6 Background Information

The Hanford Site covers approximately 1,518 km^2 (586 mi^2). Past nuclear weapon-production activities at Hanford resulted in approximately 1.7 trillion L (450 billion gal) of liquid waste being released to the ground. Much of this liquid waste discharge into the vadose zone occurred in the Central Plateau, a 194-km^2 (75-mi^2) area that includes approximately 800 waste sites and 900 facilities that operated to extract and purify plutonium. The byproducts of this activity were effluents contaminated to varying degrees with radionuclides and chemical contaminants. The most dangerous waste was stored in 177 underground tanks, and some of this waste has been released to the vadose zone. Also, concentrated waste was discharged into engineered surface structures and allowed to percolate into the vadose zone. This practice resulted in large-scale contamination of the vadose zone and groundwater underlying the Central Plateau.

Much of the associated contamination remains in the vadose zone and has the potential to contaminate groundwater in the future, but some of the contamination has reached the groundwater. Hazardous chemical contaminants include carbon tetrachloride, chromium, and nitrates. Radioactive contaminants include iodine-129, strontium-90, technetium-99, tritium, and uranium. The U.S. Department of Energy, Richland Operations Office; the U.S. Environmental Protection Agency (EPA); and the Washington State Department of Ecology (Ecology) have developed a remediation plan for protecting the Columbia River Corridor. The Groundwater Remediation Project is largely responsible for ensuring that the remediation plan is implemented.

The deeper portion of the vadose zone, hereinafter termed the "deep vadose zone," poses unique problems that make the deep vadose zone at Hanford a challenging remediation problem. In situ treatment and surface barrier technologies offer promise for immobilizing contaminants in place. This could minimize worker risk by eliminating the need to handle waste materials, as well as the risks associated with operation of a disposal facility. However, in situ technologies for Hanford deep vadose zone applications have not been sufficiently developed and tested to enable their implementation as remedial alternatives; thus, treatability testing is warranted.

1.6.1 Data Quality Objective Team Members

The participants in the DQO workshop are listed in Table 1-1. Table 1-2 lists the DQO key decision makers.

Table 1-1. Data Quality Objectives Workshop Team Members

Name	Organization	Area of Expertise (Role)
Roy Bauer	CHPRC, Environmental Engineering	DQO facilitator
Mark Benecke	CHPRC, Deep Vadose Zone	Technical lead
Glen Chronister	CHPRC, Deep Vadose Zone	Project manager, operations lead
Will Nichols	INTERA	Numerical simulations lead
Scott Petersen	CHPRC	Technical consultation
Mike Truex	PNNL, Field Hydrology and Chemistry	Technical expert
Andy Ward	PNNL, Hydrology	Technical expert

CHPRC = CH2M Hill Plateau Remediation Company
DQO = data quality objective
PNNL = Pacific Northwest National Laboratory

Table 1-2. Data Quality Objective Key Decision Makers

Name	Organization	Area of Expertise (Role)
Craig Cameron	EPA	EPA Project Manager
Rod Lobos	EPA	EPA Project Manager
John Price	Ecology	Ecology Project Manager
Dib Goswami	Ecology	Ecology Manager
John Morse	DOE	DOE Project Manager

DOE = U.S. Department of Energy
Ecology = Washington State Department of Ecology
EPA = U.S. Environmental Protection Agency

Table 1-3 lists the key sources of existing documents and data collected from previous investigations that were reviewed by the DQO team.

Table 1-3. Applicable Documents and Data Sources (2 pages)

Reference	Summary
DOE/RL-2007-56, *Deep Vadose Zone Treatability Test Plan for the Hanford Central Plateau*	Provides framework for the treatability test plan focusing on remedial technologies for Tc-99 and uranium.
PNNL-17821, *Electrical Resistivity Correlation to Vadose Zone Sediment and Pore-Water Composition for the BC Cribs and Trenches Area*	Evaluates correlation between contaminant concentrations and ERC data for four boreholes in the BC Cribs and Trenches area. Three of the boreholes are directly associated with the ERC correlation study; one of the boreholes was installed and characterized in fiscal year 2004.
PNNL-17274, *Experimental and Numerical Investigations of Soil Desiccation for Vadose Zone Remediation: Report for Fiscal Year 2007*	Provides results of laboratory and numerical modeling activities focused on evaluating soil desiccation parameters.
DOE/RL-2004-66, *Focused Feasibility Study for the BC Cribs and Trenches Area Waste Sites*	Provides characterization data for the BC Cribs and Trenches area waste sites and recommends remedial action.
SGW-38810, *Borehole Summary Report for the 216-B-26 and 216-B-58 Trenches*	Provides documentation of field activities and characterization of boreholes drilled in the 216-B-26 and 216-B-58 Trenches.
BHI-00720, *Performance Evaluation Report for Soil Vapor Extraction Operations at the Carbon Tetrachloride Site, February 1992 – September 2001*	Provides summary of operations to use soil vapor extraction for carbon tetrachloride removal from the 200-PW-1 Operable Unit vadose zone. Includes data on condensate analysis for contamination.
WMP-30426, *Performance Evaluation Report for Soil Vapor Extraction Operations at the Carbon Tetrachloride Site, Fiscal Year 2005*	Provides cost data for the soil vapor analysis systems.
RHO-CD-673, *200 Areas Waste Sites Handbook*, 3 vols.	Provides waste site descriptions, releases, waste discharge information, and management reports.
PNNL-14115, *Hydrologic Characterization Using Vadose Monitoring Tools: Status Report*	Evaluates various vadose zone monitoring instrumentation.
PNNL-15237, *Geology of the Integrated Disposal Facility Trench*	Provides geologic characterization data for the nearby Integrated Disposal Facility site.
PNNL-14586, *Geologic Data Package for 2005 Integrated Disposal Facility Waste Performance Assessment*	Provides geologic characterization data for the nearby Integrated Disposal Facility site.
PNNL-14907, *Vadose Zone Contaminant Fate-and-Transport Analysis for the 216-B-26 Trench*	Provides fate and transport analysis for Tc-99 and nitrate contamination associated with the 216-B-26 Trench.
EM 1110-1-4001, *Soil Vapor Extraction and Bioventing Engineering Manual*	Provides compilation of relevant soil vapor extraction information, including system design, testing, operation, and evaluation.
BHI-01119, *Hanford Site Atlas*	Provides Hanford Site maps.
DOE/RL-94-95, *Hanford Sitewide Groundwater Remediation Strategy*	Provides groundwater and geological information.

Table 1-3. Applicable Documents and Data Sources (2 pages)

Reference	Summary
ARH-947, *200 Areas Disposal Sites for Radioactive Liquid Wastes*	Discusses waste site and COC information.
DOE/RL-96-81, *Waste Site Grouping for 200 Areas Soil Investigations*	Summarizes site name, location, type status, site and process descriptions, known and suspected contamination, preliminary contaminant distribution conceptual model, site conditions that may affect COC fate and transport, COC mobility in Hanford Site soils, COC distribution and transport to groundwater, and hazards associated with COCs. Identifies soil porosity information for each waste site.
Hanford Environmental Information System database	Provides well information and sampling data.

NOTE: The references cited in this table are included in the reference section of this DQO summary report.

COC = contaminant of concern

ERC = electrical resistivity correlation

1.7 Contaminants of Potential Concern

Process knowledge indicates that the 200-BC-1 Operable Unit (OU) waste streams were predominantly scavenged waste discharges from the tank farms. In general, the waste generated can be described as fission-product-rich and discharged mainly from the uranium recovery scavenged waste processes. The waste contained inorganic anions and cations, as well as moderate amounts of fission products and lesser amounts of technetium-99. Technetium-99 and nitrate are of primary interest of this DQO process because they are contaminants of potential concern (COPCs) that have significantly migrated into the vadose zone beyond the waste site boundaries and have potential to threaten the groundwater.

The DQO process establishes a systematic methodology for identify the COPCs for each project. This is accomplished using a series of tables that identify all COPCs, followed by a table of contaminants that may be excluded based on half-life or other physical properties, resulting in a table with the final list of COPCs. However, because this DQO process is focused on mobile contaminants, the normal COPC development process was limited by assigning technetium-99 and nitrate as the only COPCs for this study.

1.7.1 Other Constituents and Parameters of Interest

Other constituents and parameters of interest were identified for characterization in this DQO process. These are not COPCs that could be released from the site during soil gas extraction but are instead constituents or parameters of interest that serve other characterization purposes (e.g., soil physical properties or various treatability test parameters). These constituents and parameters were adopted, as appropriate, from *Electrical Resistivity Correlation to Vadose Zone Sediment Pore-Water Composition for the BC Cribs and Trenches Area* (PNNL-17821) and are identified in Table 1-4 with rationale statements for their inclusion.

Table 1-4. Constituents and Parameters of Interest

Constituent/Parameter of Interest	Media of Concern	Inclusion Rationale
Sodium	Sediment porewater	Mobile constituent that could contribute to high ionic strength porewater, which facilitates the use of electrical resistivity correlation to monitor desiccation process by assessing changes in anomalous soil conductivity regions.
Nitrate	Sediment porewater	Mobile constituent that could contribute to high ionic strength porewater, which facilitates the use of electrical resistivity correlation to monitor desiccation process by assessing changes in anomalous soil conductivity regions.
Air permeability as function of saturation	Sediment	Parameter for fate and transport modeling of desiccation gas; confirm lateral continuity of strata.
Lithology	Sediment	Characterization data that will aid interpretation of soil desiccation study.
Particle-size distribution	Sediment	Characterization data that will aid interpretation of fate and transport studies.
Tc-99	Sediment	Data for sediment characterization.
Contamination (Tc-99, nitrate, gross alpha, beta, and gamma) in extracted gas	Extracted gas	The need for these constituents will be resolved during the characterization phase.
Volume, flow rate, humidity, and temperature of extracted gas	Extracted gas	Provides desiccation progress information.
Subsurface temperature, moisture, and pressure	Sediment	Provides desiccation progress information.
Electrical resistivity	Sediment	Indication of desiccation progress.
Subsurface pressure, humidity, and gas composition	Sediment gas	Provides desiccation progress information.

1.8 Project Schedule

The project schedule and the drivers are listed in Table 1-5.

Table 1-5. Project Schedule

Activity	Due Date
Begin soil desiccation pilot test	July 2010
Complete active portion of pilot test	December 2010
Complete rewetting monitoring portion of pilot test	To be determined

1.9 Conceptual Site Model

Table 1-6 provides relevant background information. Figure 1-3 displays, as a function of depth, the concentrations of the mobile contaminant technetium-99 and moisture at the C5923 borehole. The figure also provides the lithology.

Table 1-6. Preliminary Conceptual Contaminant Distribution Model Discussion (2 pages)

Contaminant releases:
Disposal of large quantities of scavenged waste to the BC Cribs and Trenches began in 1956 and ceased in 1958. Individual cribs and trenches were typically active for 1 to 3 months and were then shut down and backfilled. Each crib and trench received approximately 3,785 m^3 (1 million gal) of waste. Disposal of 300 Area laboratory waste to three trenches began in 1962 and ended in 1967. Disposal of waste originating from the 300 Area Plutonium Recycle Test Reactor to a single trench occurred in 1965. A total of 118, 650 m^3 (31.3 million gal) of scavenged waste was released to the soil column in 6 cribs and 16 trenches. The aqueous waste stream consisted of basic, high-salt (sodium nitrate) wastes. A total of 1,427 m^3 (377,000 gal) of 300 Area laboratory waste was released to the soil column in three trenches. This waste included various laboratory waste streams. A total of 549 m^3 (145,000 gal) of waste from the Plutonium Recycle Test Reactor upset was released to the soil column associated with a single trench.
Physical setting:
The thickness of the vadose zone in the BC Cribs and Trenches ranges from about 104 to 107 m (340 to 350 ft) in the 200 East Area. Groundwater in the unconfined aquifer generally flows from west to east.
Nature and extent of contamination:
Two components of contamination are present. A near-surface component begins near the bottoms of the former waste site structures and extends several feet deeper. The contamination in this region is primarily Cs-137 and Sr-90, with Cs-137 concentrations >1 million pCi/g currently present. The other components include mobile constituents such as Tc-99 and nitrate that have migrated much deeper into the vadose zone. In the vicinity of the trenches (assuming that the 216-B-26 Trench is typical), the plume of Tc-99 and nitrate has penetrated to approximately 48 m (150 ft) bgs. In the vicinity of the cribs where more liquid was disposed to smaller sites, the plume of nitrate and Tc-99 has penetrated to approximately 76 m (250 ft) bgs. Groundwater does not appear to have been impacted based on groundwater sampling at the C4191 and C5925 borehole locations.

Table 1-6. Preliminary Conceptual Contaminant Distribution Model Discussion (2 pages)

Contaminant flow and transport:
After discharge, liquids infiltrate the underlying soil based on their respective hydraulic gradients. Moisture and contaminants move vertically beneath waste site by uniform[a] and unstable[b] flow. Significant lateral spreading has occurred, based on electrical resistivity characterization and ground-truthing boreholes.

a. Uniform matrix flow (i.e., piston flow and wetting-front infiltration) refers to uniform moisture movement through the soil matrix whereby effluent liquids displace the initial water content of the soil. Under piston-like flow conditions, most (if not all) pre-existing water is displaced and moves ahead of the new water-added form above.

b. Unstable flow or wetting-front instability refers to flow when water accumulates in and over a fine-grained unit until the thickness of the perched water provides sufficient driving force to allow water to drip into the large pore spaces of the underlying coarse-grain sediments.

bgs = below ground surface

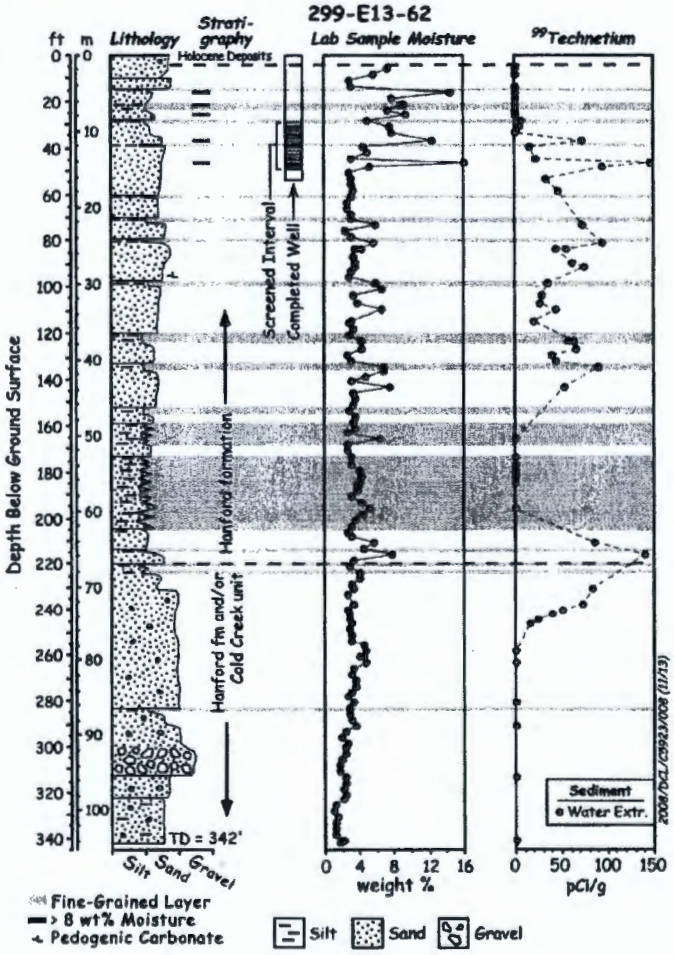

Figure 1-3. Distribution of Technetium-99 and Nitrate in the C5923 Borehole (Well 299-E13-62)

1.10 Concise Statement of the Problem

Table 1-7 combines relevant background information into a concise statement of the problem to be resolved.

Table 1-7. Concise Statement of the Problem

Problem statement:
Operational test data and additional characterization data are needed to evaluate the soil desiccation technology.

This page intentionally left blank.

2. Step 2 – Identify the Decision

The purpose of DQO Step 2 is to define all of the principal study questions (PSQs) that need to be resolved to address the problems identified in DQO Step 1 and the alternative actions (AAs) that would result from resolution of the PSQs. The PSQs and AAs are then combined into decision statements (DSs) that express a choice among AAs. Table 2-1 presents the task-specific PSQs, AAs, and resulting DSs. This table also provides a qualitative assessment of the severity of the consequences of taking an AA if it is incorrect. This assessment takes into consideration human health and the environment (flora/fauna) and political, economic, and legal ramifications. The severity of the consequences is expressed as low, moderate, or severe.

Table 2-1. Summary of Data Quality Objective Step 2 Information (2 pages)

PSQ-AA #	Alternative Action	Consequences of Erroneous Actions	Severity of Consequences
Direct Measurement PSQs			
PSQ #1 – Will soil desiccation result in significant reduction of the sediment moisture content?			
1-1	Retain soil desiccation as a viable remedy for waste sites containing deep mobile contamination.	Protective action may not be effective, resulting in unacceptable groundwater contamination.	High
1-2	Reject soil desiccation as a viable remedy for waste sites containing deep mobile contamination.	Missed opportunity to employ protective remedy.	High
DS #1 – Determine whether soil desiccation can significantly reduce sediment moisture content, or if not, a different remedy must be considered.			
PSQ #2 – Will a significant rate of sediment desiccation be accomplished during the test?			
2-1	Retain soil desiccation as a viable remedy for waste sites containing deep mobile contamination.	Schedule and cost to effect remedy will be understated.	High
2-2	Reject soil desiccation as a viable remedy for waste sites containing deep mobile contamination.	Missed opportunity to employ protective remedy.	Medium
DS #2 – Determine whether a significant rate of sediment desiccation can be accomplished during the test, or if not, consider abandoning desiccation as a practical remedy.			
PSQ #3 – What is the cost of performing soil desiccation?			
3-1	Retain soil desiccation as a viable remedy for waste sites containing deep mobile contamination if cost is not excessive.	Budget will be insufficient.	High
3-2	Reject soil desiccation as a viable remedy for waste sites containing deep mobile contamination if cost is excessive.	Missed opportunity to employ protective remedy.	High
DS #3 – Determine the cost of soil desiccation, or if not, consider abandoning desiccation as a practical remedy.			

Table 2-1. Summary of Data Quality Objective Step 2 Information (2 pages)

PSQ-AA #	Alternative Action	Consequences of Erroneous Actions	Severity of Consequences
PSQ #4 – Can soil desiccation be accomplished such that it is effective in protecting groundwater in the long term?[a]			
4-1	Retain soil desiccation as a viable remedy for waste sites containing deep mobile contamination.	Remedy is not protective.	High
4-2	Reject soil desiccation as a viable remedy for waste sites containing deep mobile contamination.	Missed opportunity to protect groundwater.	High
DS #4 – Determine whether soil desiccation exhibits long-term effectiveness that protects groundwater, or if not, consider abandoning desiccation as a practical remedy.[a]			

a. For example, can soil desiccation reduce contaminant flux to groundwater and meet concentration goals at monitoring wells. Also, consider the following elements to DS #4: Will this reduction in moisture result in effectively immobilizing the contaminants? Will the immobilization of contaminants result in protection of groundwater (how much slow down, and dilution effect)? Is the rate of desiccation reasonable for full-scale implementation? Is the radial extent of desiccation reasonable for full-scale implementation?

AA = alternative action

DS = decision statement

PSQ = principal study question

3. Step 3 – Identify the Inputs to the Decision

The purpose of DQO Step 3 is to identify the types of data needed to resolve each of the DSs identified in DQO Step 2. The data may already exist or may be derived from computational or surveying/sampling and analysis methods. Analytical performance requirements are also described in this step for any new data that need to be collected.

Data needs are derived from (1) examination of test objectives, and (2) the type of changes anticipated during conduct of the test. The overall test objective is to provide data for feasibility study evaluation of soil desiccation as a groundwater protection remedy.

3.1 Comprehensive Environmental Response, Compensation, and Liability Act of 1980 Data Needs

It will be necessary for the feasibility study to evaluate soil desiccation using the seven CERCLA criteria (i.e., protectiveness of human health and the environment, compliance with applicable or relevant and appropriate requirements (ARARs); long-term effectiveness and permanence; reduction of toxicity, mobility, or volume; short-term effectiveness; implementability; and cost.

3.1.1 Threshold Criteria: Protectiveness and Applicable or Relevant and Appropriate Requirements

Satisfying the CERCLA protectiveness criterion requires that groundwater not be contaminated above the defined groundwater remediation goals by future contaminant migration. The criteria determining remediation goals are the ARARs that define groundwater standards. It may not be practicable to directly measure any change in contaminant transport because the current transport rate is not quantified (except by modeling) and because the transport rate is slow compared to the field test timeframe. For this reason, it is expected that assessment of performance for evaluation purposes in the feasibility study will rely on fate and transport modeling, as well as complementary laboratory studies, to predict future groundwater impact. Modeling data needs must be considered; where deficient, additional data are necessary. Modeling parameter input data include sediment moisture content, sediment hydraulic conductivity, particle-size distribution, porewater contaminant concentration, lithology, and temperature.

Numerical modeling will be a key tool in evaluating whether desiccation can meet remediation goals associated with CERCLA feasibility study threshold criteria of (1) protection of human health and environment, and (2) ARARs. The treatability test needs to collect data to improve technical basis for this modeling and thereby increase site, regulator, and stakeholder confidence in the model results. Table 3-1 lists the key parameters that need to be addressed in the treatability test to support the feasibility study modeling and evaluation effort.

Table 3-1. Key Target Parameters for Desiccation Treatability Testing for Use in Improving Desiccation Modeling/Analysis for the Feasibility Study (2 pages)

Parameter	Data Collection
Impact of inlet air temperature on desiccation rate (Need as input to air injection requirements and associated estimate of desiccation timeframe, extent, and equipment for full scale.)	Laboratory tests Previous numerical modeling that predicts benefit of elevated inlet air temperature Field testing of different air inlet temperatures (need to consider the impact of high-temperature air on the ability to monitor desiccation front movement with temperature changes [for the test, lower influent temperatures would make monitoring via temperature easier and may be preferred for the test]; full-scale implementation may be better with heated air to achieve quicker desiccation)
Progress of desiccation front and bulk changes in moisture content as a function of test parameters and subsurface properties (Need to estimate radius of desiccation influence around a well, timeframe, and extent for scale-up and as a comparison to model predictions.)	Laboratory tests in heterogeneous materials Moisture content by layer during desiccation (neutron probe, post-test cores) Temperature monitoring (for passage of desiccation front) Pressure monitoring Influent/effluent pressure and flow monitoring Cross hole radar, ERT Tracers
Subsurface properties (Needed as basic input to model configuration.)	Sediment sample analysis and geophysical logging in accordance with the sampling and analysis plan Porosity (porosity tool, tracers)
Impact of desiccation on solute concentration (Needed to evaluate for potential negative impacts on future contaminant migration and to use for model input if important during rewetting.)	Laboratory tests Post-test cores Cross-hole ERT
Matric potential and changes during desiccation as a parameter related to desiccation performance and to account for differences in moisture content in different layers (Needed as a performance target that correlates to the rewetting/water migration after desiccation and takes into account subsurface heterogeneity and for comparison to model simulations at targeted endpoint matric potentials.)	Matric potential (e.g., heat dissipation units at selected depth intervals Water-content estimate with laboratory calibration
Moisture content and physical properties in zones surrounding the desiccation zone as a measure of the driving force for rewetting (Needed to set boundary conditions for evaluating the rate of rewetting at the field test site and comparing this to model predictions as a validation of the model which will be used to extrapolate to other potential surrounding conditions.)	Expand planned monitoring to include above, below, and around the desiccation zone Use surface barrier to control air flow from/to surface during desiccation operations so the test is representative of deep vadose zone; consider removing this barrier during rewetting to impose higher recharge conditions for monitoring of rewetting performance

NOTE: EM-1110-1-4001, *Soil Vapor Extraction and Bioventing Engineering Manual*

DPT = direct-push technology

Table 3-1. Key Target Parameters for Desiccation Treatability Testing for Use in Improving Desiccation Modeling/Analysis for the Feasibility Study (2 pages)

Parameter	Data Collection

ERT = electrical resistivity tomography

3.1.2 Long-Term Effectiveness and Permanence

Long-term effectiveness and permanence consider the magnitude of residual risk to human and ecological receptors and the adequacy and reliability of controls. Because soil desiccation is not expected to remove contamination, but will instead leave the contamination relatively immobilized in the vadose zone, it will be necessary to depend on numerical simulations to predict the extent that contaminant transport is slowed and its eventual impact on groundwater. Because "rewetting" of the desiccation zone following treatment has the potential to undo the treatment, that process and the associated controlling parameters need to be considered when evaluating the effectiveness of soil desiccation. Rewetting could result from surface recharge, vapor phase water, and/or from lateral migration of moisture from the edges of the desiccation region back into the region that was treated. Surface recharge can be controlled using a surface barrier; thus, evaluations need to consider how desiccation can work in conjunction with a surface barrier. Rewetting mechanisms are expected to be slow compared to the field test timeframe, resulting in dependence on modeling and complementary laboratory studies. The controls are those "barriers" that would prevent a receptor from contacting the residual contamination. Institutional controls are in this category; however, being administrative in nature, they are not considered germane to this investigation.

Table 3-2 outlines the issues and resolution for long-term effectiveness and permanence.

Table 3-2. Issues and Resolution for Long-Term Effectiveness and Permanence

Issue	Resolution
Does the desiccation process create a capillary break that helps mitigate vertical transport of water/solutes?	Laboratory test of rewetting to examine this expected phenomenon. Modeling of water infiltration after desiccation in terms of how water breaks through the desiccation zone.
How much capacity can be created due to a soil water deficit during desiccation, and what is the effect on vertical transport of water/solutes?	Laboratory test of rewetting to examine this phenomenon. Field testing to determine extent of desiccation. Modeling of water infiltration after desiccation in terms of how water breaks through the desiccation zone.
If desiccation increases concentration of solutes in porewater, upon rewetting, is a high-concentration front pushed into the groundwater?	Laboratory test of rewetting to examine this potential phenomenon. Modeling of water infiltration after desiccation in terms of how contaminants break through the desiccation zone and further transport to the groundwater.
What is the impact of wells used for desiccation process on vertical pathways of water movement?	Post-test geophysical logging or sampling of the test site wells. Evaluate option of decommissioning wells in accordance with the *Washington Administrative Code* to preclude preferential flow paths.
In a heterogeneous environment, how dry do the low-permeability zones need to be, and how does this correlate to future water migration matric potential target needed in the desiccated zone to mitigate water movement relative permeability needed to get a capillary break and mitigate water migration?	Laboratory test of rewetting to examine this potential phenomenon. Field testing to determine extent of desiccation. Modeling of water infiltration after desiccation in terms of how water breaks through the desiccation zone.
Correlate groundwater MCL criteria to a vadose zone flux that will meet this MCL. Determine the recharge rate and permeability reduction in desiccation zone that meets this criteria for expected scenarios of recharge and surrounding moisture conditions.	Modeling process to help set range of target desiccation performance using available information for model configuration. This type of modeling would be conducted in more detail after data from the desiccation test are available to refine the model configuration.

MCL = maximum contaminant level

3.1.3 Reduction of Volume, Mobility, or Toxicity

By intent, soil desiccation will reduce the mobility of otherwise quite mobile contaminants (technetium-99 and nitrate). Because it is doubtful that mobility reduction can be actually measured within the time frame of the treatability test, such reduction will need to be inferred by modeling the impact that moisture reduction has on contaminant transport.

Table 3-3 outlines the issues and resolutions for reduction of toxicity, mobility, or volume.

Table 3-3. Issues and Resolution for Reduction of Toxicity, Mobility, or Volume

Issue	Resolution
Does desiccation reduce the volume and mobility of contaminant in terms of flux/concentrations in the groundwater?	Modeling of water infiltration after desiccation in terms of estimating contaminant flux to groundwater.
Because desiccation increases concentration of solutes in porewater, upon rewetting, is a high-concentration front pushed into the groundwater?	Laboratory test of rewetting to examine this potential phenomenon. Modeling of water infiltration after desiccation in terms of how contaminants break through the desiccation zone and further transport to the groundwater.
Are colloids formed that may lead to increased contaminant transport?	Monitoring of extracted air during the desiccation field test.

3.1.4 Short-Term Effectiveness

Short-term effectiveness considers potential effects on human health and the environment during the implementation phase of the remedy and the time required to achieve remedial action objectives. Extracted gas could expose workers and/or the public if it is contaminated. The rate that desiccation can be affected is another attribute of this criterion where data could be collected.

The issues and resolution for short-term effectiveness are outlined in Table 3-4.

Table 3-4. Issues and Resolution for Short-Term Effectiveness

Issue	Resolution
Does desiccation effectively remove water in a heterogeneous system?	Laboratory test of desiccation in heterogeneous systems. Field test of desiccation in a heterogeneous test site. Modeling of desiccation in heterogeneous systems.
Does desiccation of a heterogeneous system reduce the relative permeability of vertical transport pathways and thereby minimize the impact of these heterogeneities on contaminant migration?	Laboratory test of rewetting to examine this potential phenomenon in heterogeneous systems. Modeling of water infiltration after desiccation of in heterogeneous systems in terms of how contaminants move through the desiccation zone.

3.1.5 Implementability

Implementability includes technical and administrative feasibility, as well as availability of services and materials. The only pertinent element of this criterion is technical feasibility. Because soil desiccation is quite similar to soil vapor extraction remedies, which have been successfully employed since the 1970s, it is considered feasible.

3.1.6 Cost

Data relating to cost will be collected to enable inclusion of this criterion. Table 3-5 outlines the issues and resolution for cost.

Table 3-5. Issues and Resolution for Cost

Issue	Resolution
What are the designs of the well layout, equipment, and the operating parameters required to achieve the desired level of moisture removal within a realistic timeframe?	Laboratory test of desiccation as a function of sediment properties. Field test of desiccation in a heterogeneous test site. Modeling of desiccation in targeted subsurface conditions.
How frequently would desiccation need to be repeated to meet remediation goals?	Modeling of water infiltration after desiccation in terms of how contaminants break through the desiccation zone and further transport to the groundwater.
Is a surface barrier needed in conjunction with desiccation, and if so, what type?	Modeling of water infiltration after desiccation in terms of how contaminants break through the desiccation zone and further transport to the groundwater.

3.2 Summary of Numerical Modeling to Support the Desiccation Treatability Test

Previous simulation efforts relevant to desiccation field testing have been reported in *Vadose Zone Contaminant Fate and Transport Analysis for the 216-B-26 Trench* (PNNL-14907) and *Experimental and Numerical Investigations of Soil Desiccation for Vadose Zone Remediation: Report for Fiscal Year 2007* (PNNL-17274). Site-specific characterization data are now available for the field test site. Simulation efforts initiated in FY09 using these site data are described below.

3.2.1 Simulations to Support Selection of Appropriate Desiccation Performance Targets

The simulations will provide initial estimates for desiccation performance on a larger scale in terms of setting desiccation performance targets that have the potential to meet remediation goals for the 200-BC-1 OU. Simulations will test different desiccation scenarios, including variations in the desiccation target endpoint and location, as well as variations in the subsurface and surface conditions for the overall domain. These simulations are not intended to select how desiccation will be applied at the BC Cribs and Trenches; instead, these simulations will be used to evaluate the extent of desiccation that is necessary to mitigate contaminant transport under conditions relevant to the BC Cribs and Trenches. This information will be used to set relevant desiccation targets for the field test.

3.2.2 Simulations to Support Desiccation Design and Implementation

These simulations are targeted at defining appropriate well spacing, air flow, and parameters related to the test layout and equipment for the desiccation demonstration. These simulations will relate system configuration alternatives to the resulting time to desiccate a target volume, the extent and uniformity of desiccation, the quantities of air/water that need to be handled during the demonstration, and the robustness to subsurface uncertainties. The simulations will estimate the performance of different potential configurations. These simulations will also be used to evaluate the monitoring approach during desiccation and for performance monitoring of the rewetting process after desiccation. A set of potential configurations will be developed based on the results of the FY08 scoping simulations. An iterative approach will then be used to test these configurations, with subsequent adjustments to improve performance.

3.3 Summary of Laboratory Efforts to Support the Desiccation Treatability Test

Previous laboratory experiments in meter-scale columns and flow cells examined evaporative cooling as a factor impacting the evaporation process and the effect of salt concentrations on desiccation rates. It was shown that desiccation of relatively simple configurations could be correctly simulated with the Subsurface Transport Over Multiple Phases (STOMP) simulator (PNNL-12034, *Subsurface Transport Over Multiple Phases [STOMP]*), provided that the hydraulic and thermal properties of the porous media were independently determined. The desiccation experiments with dissolved salts showed that the rate of desiccation was not influenced by salt concentrations up to 500 g/L. Previous laboratory efforts are presented in PNNL-17274.

Two laboratory tasks were initiated in FY09:

- Develop a gas-tracer method to detect and quantify soil moisture during desiccation: The method is based on the use of conservative (nonpartitioning) and water-partitioning tracers, wherein the partitioning tracer transfers into the water, which retards its movement with respect to that of the nonpartitioning tracer. Methane and/or sulfur hexafluoride will be used for the conservative tracers, while difluoromethane and/or trichlorofluoromethane will be included as the partitioning tracers. Volumetric soil-water contents are estimated from comparative moment analysis of the measured breakthrough curves. The tracers will be analyzed using an in-line gas chromatograph with flame ionization detection. This retardation is a function of the soil-water content. This method will be used in subsequent laboratory experiments and in the field to estimate the initial moisture content and water mass removal during the desiccation process.

- Soil desiccation in heterogeneous systems: The laboratory experiments conducted to date were completed in either homogeneous or relatively simple heterogeneous systems. An improved understanding and description of desiccation processes for relevant and more complex heterogeneous porous media systems is needed to support design of desiccation in the Hanford subsurface. Two remaining issues to be investigated are how the scale of the heterogeneity (i.e., thickness of the low-permeability zone) and the amount of permeability contrast for sediment heterogeneities impact the desiccation process. The experiments for this task will be completed in meter-scale rectangular and wedge-shaped flow cells. The results will be used to define how the heterogeneities impact the desiccation front and humidity in the permeable zone, and the extent and timeframe for desiccation of low-permeability zones. The hydraulic and thermal properties of the porous media used in the experiments will be determined independently. Tracers will be used to monitor the desiccation process during the experiments.

Laboratory testing planned for FY10 are discussed below:

- Effects of rewetting by water vapor and liquid water: Rectangular, meter-scale flow cells will be used to investigate rewetting (after desiccation) as a result of recharge, aqueous phase spills, and water vapor transport. The flow cell will be packed heterogeneously with Hanford sediments at selected initial water saturations and salt concentrations. After desiccation, rewetting will be induced through recharge, a spill, or an imposed water vapor boundary condition. After equilibrium conditions are obtained, the flow cell will be excavated and the salt concentrations will be determined. As for all flow cell experiments, water content, electrical conductivity, temperature, and humidity data will be obtained. Gas tracer tests will be conducted before and after desiccation, and several times during the rewetting phases.

3.4 Test Performance Data

Data from performance test monitoring are needed. At the highest level, the rate and extent of desiccation are important. To the extent practicable, changes in subsurface moisture content, temperature, soil gas composition, and matric potential should be monitored to assess desiccation rate and extent. Although desiccation is not expected to affect contaminant concentrations, laboratory experiments have shown that contamination may be carried along with the drying front to some extent. Therefore, contaminant concentrations should be measured before and after the test. Post-test sediment sampling should be considered to ground truth geophysical moisture measurements. Aboveground data collection should include those attributes that affect subsurface gas transport (e.g., injection/extraction gas temperature, pressure, and flow rate). Extracted gas composition, particularly if tracer gases are employed, will facilitate assessment of desiccation progress.

3.5 Basis for Setting the Preliminary Action Level

Action levels will be evaluated based on numerical simulation and engineering judgment to account for the multiple factors involved in selecting the appropriate actions. Table 3-6 identifies the basis for establishing the test goals within the constraints that moisture and contaminant concentrations are to be compared within the same lateral depth interval of approximately 3 m (10 ft).

3.6 Information Required to Resolve Decision Statements

Table 3-7 specifies the data required to resolve each of the DSs identified in Table 2-1 and identifies whether the data already exist. For the data that are identified as existing, the references for the data have been provided with a qualitative assessment regarding whether the data are of sufficient quality to resolve the corresponding DS.

3.6.1 Data Gap Analysis

As noted in Table 3-7, subsurface moisture, contaminant, and sediment property data have been collected in the 200-BC-1 OU. Nevertheless, data gaps exist related to defining these parameters at the much smaller scale of the field test site within the 200-BC-1 OU. Additionally, data related to contaminant and moisture content of extracted air from the subsurface are available for the 200-PW-1 OU but are not available for the 200-BC-1 OU. Furthermore, specific operational data are unavailable. These data gaps require the acquisition of additional data to support the objectives defined in this DQO summary report.

3.7 Field and Analytical Methods

Table 3-8 identifies information categories and the potential methods for addressing the data gaps previously discussed.

Table 3-6. Basis for Setting Test Goals (9 pages)

DS #	Environmental/ Test Variable	Basis for Setting Preliminary Action Level	Test Goals	Measurement Methodology
1, 2, and 4	Average moisture content reduction	The moisture content in borehole C5923 is nominally 10 wt% within the 9.1 to 15.2 m (30 to 50 ft) bgs region (peak moisture content is near 16 wt%). Because of the heterogeneous stratigraphy, the desiccation process is expected to dry the coarse-grained strata more quickly than the fine-grained strata. It should not be necessary to completely dry the fine-grained strata to effectively immobilize the associated contamination. Additionally, higher moisture content in the fine-grained strata may correspond to a matric potential that is suitable for mitigating water movement. Numerical modeling will be used to define a range of target matric potential and associated moisture content for the type of sediments found within the test interval. The 2005 Vadose Zone Technical Panel (WMP-27397) provided a means to examine reduction in flux as a function of reduction in water content. Text from the Vadose Zone Technical Panel report Appendix D is presented below: *In deep vadose zones, gravity forces dominate water flow and as a result an (almost) steady downward flux develops below the root zone (Eq. [1]). This long-term flux q (L/T) determines the water content θ (L3/L3) in the vadose zone and in the absence of capillary forces* $q = K(\theta)$ [1] *where K(θ) is the unsaturated hydraulic conductivity (L/T) at water content θ.*	5 wt% (average) to be refined by modeling results.	Down-hole neutron logging, cross-hole radar, heat dissipation unit (measures matric potential), and sediment sampling. Evaluation of relative tracer gas concentrations will provide information regarding to what extent the injected gas is interacting with sediment moisture and contributing to desiccation in the targeted zone. Interpretation will allow determination of average sediment moisture content in air-swept region.

Table 3-6. Basis for Setting Test Goals (9 pages)

DS #	Environmental/ Test Variable	Basis for Setting Preliminary Action Level	Test Goals	Measurement Methodology
		The convective flux of solutes J (M/T) is $J = q\,C = K(\theta)\,{}^{*}C(\theta)$ [2] *where C is the concentration of the solutes* (m/L^3). *As shown in Eq. [2], both the downward flux q and concentration C depend on the volumetric water content θ. If the water content decreases due to desiccation, the flux will decrease and the solute concentration will increase. The increase of the solute concentration is a linear function of the decrease in water content, while the decrease of the unsaturated hydraulic conductivity and downward flux is a strongly non-linear function of the decrease in water content. Therefore, it is expected that the convective solute flux will decrease after desiccation in a deep homogeneous vadose zone where gravity-driven steady-state flow dominates. For example, the solute flux in loamy sand[e] is calculated using Eq. [2] assuming a solute concentration at saturation of 1,000 ppm.* *The logarithm of the solute flux is plotted against volumetric water content (Figure D-1). If the media becomes drier, the solute flux dramatically decreases, because the decrease of the water flux is much larger than the increase in solute concentration. These theoretical results, based on steady-state flow in the deep vadose zone, make desiccation an attractive remediation strategy.*		

Table 3-6. Basis for Setting Test Goals (9 pages)

DS #	Environmental/ Test Variable	Basis for Setting Preliminary Action Level	Test Goals	Measurement Methodology
		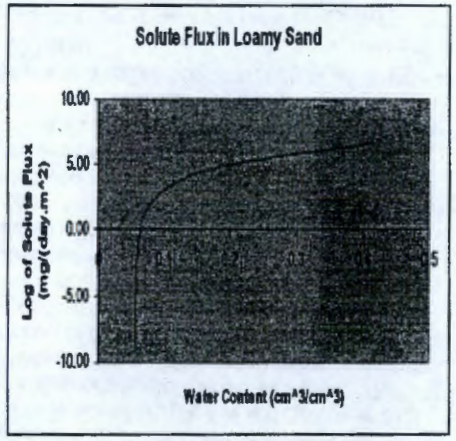 *Figure D.1. Logarithm of Solute Flux Through Deep Vadose Zone of Loamy Sand with Gravity-Driven Steady-state Flow as a Function of Volumetric Water Content.* The 10 wt% average water content is approximately 0.18 volumetric water content. Cutting this initial value in half to 5 wt% would result in a volumetric water content of about 0.09, which is at the beginning of the steep part of the flux curve. Thus, as a first approximation, cutting the water content in half is a relevant target to create a significant reduction in flux.		

Table 3-6. Basis for Setting Test Goals (9 pages)

DS #	Environmental/ Test Variable	Basis for Setting Preliminary Action Level	Test Goals	Measurement Methodology
		The above analysis is for steady-state flow conditions. Note that the water content flux relationship for each type of layer present in the subsurface is different, and this analysis does not account for a layered system or the impact of capillary breaks. It is expected that an overall reduction of moisture content by 5 wt% would results in some layers having a much smaller endpoint moisture content, and some layers having a larger endpoint moisture content. The 2005 Vadose Zone Technical Panel also indicated that under transient flow conditions, the effect of increased solute concentrations caused by desiccation may create conditions leading to a higher flux at the water table, although this flux is substantially delayed in time compared to base case conditions (Appendix D of Vadose Zone Technical Panel report). The transient analysis was for a homogeneous subsurface using a one-dimensional model. Numerical modeling with a three-dimensional model domain and site-specific subsurface properties is underway to further evaluate the impact of desiccation on the flux to the groundwater.		

Table 3-6. Basis for Setting Test Goals (9 pages)

DS #	Environmental/ Test Variable	Basis for Setting Preliminary Action Level	Test Goals	Measurement Methodology
2, 3, and 4	Rate of moisture reduction	Assuming that injected air has no moisture and the extracted air will be saturated with moisture, the rate of moisture reduction is dependent on the permeability of the sediment and the dry air injection rate. At 15°C (59°F), air should contain >13 g H_2O/m^3. Assuming extraction of 300 scfm, 4,770 kg water will be removed per month. Assuming this quantity represents 5 wt% of the sediment and a sediment bulk density of 1,800 kg/m^3, approximately 53 m^3 would have its average moisture content reduced by 5 wt% per month. Operating for 6 months, the desiccated volume is calculated at 318 m^3. A refined estimate of desiccation rate will be made using numerical modeling. From a practical perspective, the rate of moisture reduction (time to achieve benefit) should be comparable to the currently used pump and treat remedies used to clean up groundwater.	Inject 300 scfm of dry air; extract 300 scfm (assuming one extraction well). Desiccate 53 m^3/month. To be refined by modeling results.	Extracted air humidity/flow rate. Interpretation of data from tracer gas concentration, ground-penetrating radar, electrical resistivity correlation, matric potential sensors, and neutron probes will allow determination of average sediment moisture content in air-swept region.
1, 2, and 4	Moisture content of specific strata	Initial and final moisture contents provide input to fate and transport modeling efforts that will be used to predict benefit of desiccation and rewetting dynamics. Of particular importance is the moisture content of strata above the desiccation zone, which may drain into the zone. Numerical modeling results will be used to provide input to the distribution of moisture content in different strata, as this relates to the matric potential and the associated driving forces for water movement.	Measure moisture content throughout the vadose zone with sufficient resolution to correspond to specific strata in the interval between at least 3 m (10 ft) above and below the planned zone of desiccation. Specific goals to be determined by modeling results.	Down-hole neutron logging, cross-hole radar, heat dissipation unit (measures matric potential), and sediment sampling.

Table 3-6. Basis for Setting Test Goals (9 pages)

DS #	Environmental/ Test Variable	Basis for Setting Preliminary Action Level	Test Goals	Measurement Methodology
2	Gas flow rate into injection well	Gas injection should sufficient to meet the desiccation rate targets described above and to balance air flow in the subsurface.	300 scfm (min)	Flow meter
1 and 2	Gas flow out of extraction well	300 scfm from well is matched with the injection rate and targeted desiccation rate.	300 scfm (min)	Flow meter
1, 2, 3, and 4	Zone of pressure influence surrounding extraction well	Zone of pressure influence is the limit of measurable pressure influence resulting from an extraction well. Given the heterogeneity of the mostly sandy sediment, the zone of pressure influence could extend to >15 m (49.2 ft) (see manual EM 1110-1-4001). Well spacing is highly dependent on the zone of pressure influence (estimate based on air permeability).	>12 m (39 ft)	Pressure measurements
1, 2, 3, and 4	Fraction gas extracted that either came from injection well or is native soil gas	Acknowledging that the extraction well is screened as shallow as 9.1 m (30 ft) bgs, a reasonable goal of 85% is established to minimize air flow to/from the ground surface. Numerical simulations have shown that significant interaction with the ground surface may occur without a surface air-flow barrier and that this interaction would have a negative impact on creating a desiccated zone in the target test interval.	>85% at steady state	Tracer gas analysis and interpretation
4	Rewetting rate	The rewetting rate will strongly affect the long-term effectiveness of the potential soil desiccation remedy. Ideally, the rate should be such that the potential soil desiccation remedy is considered permanent (i.e., reduces contaminant flux to the groundwater so groundwater goals are met and maintained at all times).	Contaminant flux reduction goal to be established by numerical modeling.	Modeling

Table 3-6. Basis for Setting Test Goals (9 pages)

DS #	Environmental/ Test Variable	Basis for Setting Preliminary Action Level	Test Goals	Measurement Methodology
3	Operational cost data (capital cost [well spacing, monitoring requirements] electric power consumption, waste disposal, desiccation rate, rewetting rate [this may determine whether desiccation needs to be performed periodically], etc.)	Cost data to allow deployment as a groundwater protection remedy.	N/A	Capture costs
3	Tc-99, nitrate, and gross alpha, beta, and gamma in extracted gas and associated moisture	Contamination in extracted soil gas will be used as input to a decision about the need for treatment of the extracted soil gas prior to atmospheric discharge.	Less than air and water discharge requirements.	May not be measured. Depends on results of characterization test. Potential cost-impacting measure.
1 and 2	Moisture content of extracted gas	Soil gas is expected to be near saturation at 15°C (59°F) (13 g-H_2O/m^3-air). If the extracted soil gas water content is significantly lower, flow bypass may be occurring.	Greater than 10 g/m^3 at 15°C (59°F).	Humidity gauge
2 and 4	Injected gas temperature	Numerical simulation shows that increasing the temperature of injected gas will increase the desiccation rate. However, this variable will not be evaluated, because it is believed that numerical simulation is sufficient to assess impact of variation of gas temperature. Until detailed test design is completed, a nominal gas temperature of 20°C (68°F) is selected to provide capability to monitor passage of drying front while providing significant water-carrying capacity.	20°C (68°F) ±2°C (±3.6°F).	Temperature gauge

Table 3-6. Basis for Setting Test Goals (9 pages)

DS #	Environmental/ Test Variable	Basis for Setting Preliminary Action Level	Test Goals	Measurement Methodology
2, 3, and 4	Injected gas pressure	Numerical simulation shows that increasing the pressure of injected gas will increase the air flow rate and the associated desiccation rate.	NA; pressure is dependent on flow rate	Pressure gauge
1, 2, and 3	Injected gas humidity	Target is based on a balance of cost of drying the injected air vs. the potential loss of drying capacity by using less than fully dried air. Until detailed test design is completed, a target of 6% relative humidity (RH) is selected.	10% RH at 15°C. (equivalent)	Humidity gauge
4	Sediment moisture content	An average sediment moisture content of <5 wt% is assumed to effectively slow contaminant transport and protect groundwater, because that halves the current moisture content of strata exhibiting high contamination (this is subject to change pending numerical simulation). If the extraction well operates at 300 scfm for 6 months, the quantity of water removed is such that it would take more than 1,000 years to replace it via recharge through an evapotranspiration barrier.[a]	<5 wt% (average), plus an evapotranspiration cap	Numerical simulation

Table 3-6. Basis for Setting Test Goal (9 pages)

NOTE: EM 1110-1-4001, *Soil Vapor Extraction and Bioventing Engineering Manual.*

a. The Van Genuchten parameters used to derive the hydraulic properties are as follows: residual water content = 0.057, saturated water content = 0.41, alpha = 1.24, n = 2.28, saturated hydraulic conductivity = 350.2 cm/day [approximately 12 ft/day].

cfm = cubic feet per minute

DS = decision statement

N/A = not applicable

a. Soil desiccation scoping calculations:

Desiccation rate:

Soil gas water content	13	g/m^3	(saturation at 15°C)				
Soil gas injection rate	300	cfm	2.832	m^3/m	4,078.08	m^3/day	
Bulk density	1,800	kg/m^3					
Moisture content to be removed	5	wt%	90	kg/m^3			
Water removal rate	53.02	kg/d	1590.451	kg/month		9,542.707	kg/6 month
Volume desiccated	17.67168	m^3/month	106.0301	m^3/6 month	0.024544	m^3/hour	

Desiccation radius:

h	20	ft	6.096	m
V=π*h*r^2				
r for 6 months	4.075471	m	13.36754	ft

Rewetting capacity calculation:

28,628	liters removed at 300 cfm for 6 months
52.18	m^2 surface area based on radius of influence calculation for three-well system
5.00E-04	m/year recharge (0.5 mm/year assumed recharge with surface barrier)
26	L/year recharge
1,097	year capacity

Table 3-7. Required Information and References

DS #	Required Information Category	Does Data Exist? Y/N	Reference	Are Available Data of Sufficient Quality and Quantity to Support evaluation of Soil Desiccation as a Remedy? (Y/N)	Are Additional Data Required to Support Evaluation of Soil Desiccation as a Remedy? (Y/N)
1	Distribution of subsurface moisture, contaminants, and sediment properties	Y	PNNL-17821, *Electrical Resistivity Correlation to Vadose Zone Sediment Pore-Water Composition for the BC Cribs and Trenches Area* SGW-38810, *Borehole Summary Report for the 216-B-26 and 216-B-58 Trenches* PNNL-15237, *Geology of the Integrated Disposal Facility Trench* PNNL-14586, *Geologic Data Package for 2005 Integrated Disposal Facility Waste Performance Assessment* BHI-00882, *Airflow Modeling Report for Vapor Extraction Operations at the 200-ZP-2 Operable Unit (Carbon Tetrachloride Expedited Response Action)*	N	Y
2	Desiccation progress (overall)	Y	PNNL-17274 *Experimental and Numerical Investigations of Soil Desiccation for Vadose Zone Remediation: Report for Fiscal Year* BHI-00720, *Performance Evaluation Report for Soil Vapor Extraction Operations at the Carbon Tetrachloride Site, February 1992 – September 2001* EM 1110-1-4001, *Soil Vapor Extraction and Bioventing*	N	Y
3	Capital and operational cost	Y	EM 1110-1-4001, *Soil Vapor Extraction and Bioventing*	N	Y
4	Protectiveness of groundwater	N	N/A	N	Y

NOTE: The references cited in this table are listed in the reference section (Section 9).

DS = decision statement

N/A = not applicable

Table-3-8. Sediment Information Required to Resolve the Decision Statements (3 pages)

DS #	Required Information Category	Specific Information Need	Field Test Methods	Analytical Methods
1, 2, and 4	Distribution of subsurface moisture, contaminants, and sediment properties	Moisture content as a function of time, distance from injection well, and depth	Hanford Site-specific versions of the following methods are available from field loggers: ASTM D5753-05 (general logging guidelines) and ASTM D6727-01 (neutron logging) Cross-hole logging In situ moisture probes Tracer gas interpretation Soil gas humidity	ASTM D2216-05
1, 2, and 4	Distribution of subsurface moisture, contaminants, and sediment properties	Vertical distribution of lithology	Hanford Site-specific versions of the following methods are available from field loggers: ASTM D5753-05 (general logging guidelines) and ASTM D6274-98 (gamma logging) Geologist observations	Sediment types and depths by ASTM D2488-06
1, 2, and 4	Distribution of subsurface moisture, contaminants, and sediment properties	Particle-size distribution	Geologist observations	ASTM D422-63
1 and 2	Distribution of subsurface moisture, contaminants, and sediment properties	Specific electrical conductivity of sediment porewater	Electrical resistivity tomography	ASTM D1125-95 or EPA Method 9050A
1, 2, and 4	Distribution of subsurface moisture, contaminants, and sediment properties	Technetium-99 content in porewater and sediment	NA	ICP/MS 6020, EPA Method 200.8
1, 2, and 4	Distribution of subsurface moisture, contaminants, and sediment properties	Nitrate content in porewater and sediment	Electrical resistivity tomography	EPA Method 9056 or Method 300.0

Table-3-8. Sediment Information Required to Resolve the Decision Statements (3 pages)

DS #	Required Information Category	Specific Information Need	Field Test Methods	Analytical Methods
1, 2, and 4	Distribution of subsurface moisture, contaminants, and sediment properties	Sodium concentrations in sediment and porewater	Electrical resistivity tomography	ASTM C1111-04 or EPA Method 6010B, 200.8, or 6020
1, 2, and 4	Distribution of subsurface moisture, contaminants, and sediment properties	Large-scale air permeability (volume of extracted air, Δp)	Manual EM 1110-1-4001	NA
3	Cost	Capital cost of well installation, including instrumentation, power consumption, desiccation rate, and rewetting rate	NA	NA

NOTES:

1. EM 1110-1-4001, *Soil Vapor Extraction and Bioventing Engineering Manual.*
2. For the methods cited in this table, reference information is as follows:

   EPA Method 200.8, see EPA/600/R-94/111, *Methods for the Determination of Metals in Environmental Samples, Supplement 1.* For EPA Method 300.0, see EPA/600/4-79/020, *Methods of Chemical Analysis of Water and Wastes.* Four-digit EPA methods are found in SW-846, *Test Methods for Evaluating Solid Waste: Physical/Chemical Methods*, 3rd Edition; Final Update IV-B.

   ASTM C1111-04, *Standard Test Method for Determining Elements in Waste Streams by Inductively Coupled Plasma-Atomic Emission Spectroscopy.*

   ASTM D422-63, *Standard Test Methods for Particle-Size Analysis of Soils.*

   ASTM D1125-95, *Standard Test Methods for Electrical Conductivity and Resistivity of Water.*

   ASTM D2216-05, *Standard Test Methods for Laboratory Determination of Water (Moisture) Content of Soil and Rock by Mass.*

   ASTM D2320-98, *Standard Test Method for Density (Relative Density) of Solid Pitch (Pycnometer Method).*

   ASTM D2488-06, *Standard Practice for Description and Identification of Soils (Visual-Manual Procedure).*

   ASTM D4327-03, *Standard Test Method for Anions in Water by Chemically Suppressed Ion Chromatography.*

   ASTM D4525-04, *Standard Test Method for Permeability of Rocks by Flowing Air.*

   ASTM D5753-05, *Standard Guide for Planning and Conducting Borehole Geophysical Logging.*

   ASTM D6274-98, *Standard Guide for Conducting Borehole Geophysical Logging-Gamma.*

   ASTM D6727-01, *Standard Guide for Conducting Borehole Geophysical Logging-Neutron.*

ASTM = American Society for Testing and Materials
DS = decision statement
EPA = U.S. Environmental Protection Agency
NA = not available

Table 3-9 presents provides details on the computational methods identified in Section 3.2. These details include the source and/or author of the computational method and information on how the method could be applied to this study.

Table 3-9. Details on Identified Computational Methods

DS #	Computational Method	Source/ Author	Application to Study
4	STOMP	PNNL	Numerical simulation tool for unsaturated water and contaminant transport can be used to evaluate the impact of desiccation on contaminant flux and to evaluate potential full-scale applications.

PNNL = Pacific Northwest National Laboratory
STOMP = Subsurface Transport Over Multiple Phases

3.8 Analytical Performance Requirements

Analytical performance requirements are described in Table 3-10. Table 3-11 provides detail on additional physical and geochemical analyses of borehole sediment samples for characterizing the soil desiccation pilot test site model, and condensate analytical performance requirements are shown in Table 3-12.

Table 3-10. Sediment Analytical Performance Requirements (2 pages)

Nonradiological Analytes						
Type of Analyte	COPCs, Anions, and Cations	Survey or Analytical Method[a]	Sediment Reporting Limit[b] (mg/kg)	Porewater[b] Reporting Limit (mg/L)	Precision	Accuracy
Chemical	Sodium	ASTM C1111-04 or EPA Method 6010B, 6020, or 200.8[c, d]	250	5	≤30%	70-130%
Chemical	Nitrate	Equivalent ion chromatography methods: ASTM D4327-03 or EPA Method 9056[d, f]	2.5	1 to 5, depending on method	≤30%	70-130%
Radiological Analytes						
Analyte	Isotope	Analytical Method[g]	Sediment MDC[b] (pCi/g, except as noted)	Porewater[b] MDC (pCi/L)	Precision	Accuracy
Radio-nuclide	Technetium-99	ICP/MS 6020, EPA Method 200.8, or wet chemical separation and LSC	15	15	≤30%	70-130%

Table 3-10. Sediment Analytical Performance Requirements (2 pages)

NOTE: Borehole sample media will be archived for possible later analysis of other constituents.

a. Analytical method selection is based on available methods by laboratories currently contracted to the Hanford Site. Four digit methods are from SW-846, *Test Methods for Evaluating Solid Waste: Physical/Chemical Methods*, 3rd Edition; Final Update III-B, as amended.

b. Typical reporting limit or minimum detectable concentration based on current Hanford Site laboratory contracts or are adjusted based on the project requirements. Detection limits in subsequent documents may differ, depending on method selection and the contract laboratory.

c. EPA/600/R-94/111, *Methods for the Determination of Metals in Environmental Samples, Supplement 1.*

d. Sediment anion analyses performed on 1:1 solid to water leach, followed by EPA Method 300 ion chromatograph analysis (EPA/600/R-93/100). Sediment cation analyses performed after concentrated hot acid extract (SW-846, EPA Method 3050b) or total microwave digestion.

f. EPA/600/R-93/100, *Methods for the Determination of Inorganic Substances in Environmental Samples.*

g. Specific methods vary depending on laboratory.

h. Based on assumption that vadose zone porewater volume is <10 mL.

ASTM = American Society for Testing and Materials

COPC = contaminant of potential concern

EPA = U.S. Environmental Protection Agency

ICP/MS = inductively coupled plasma/mass spectrometry

LSC = liquid scintillation counter

MDC = minimum detectable concentration

Table 3-11. Additional Physical and Geochemical Analyses of Sediment Samples

Property	Parameter	Reason for Measuring	Method	Reporting Limit	Precision Required	Accuracy Required
Sediments						
Physical	Lithology	CSM update	Sediment types and depths by ASTM D2488-06	N/A	N/A	N/A
	Particle-size distribution[a]	CSM update	ASTM D422-63	N/A	N/A	N/A
	Moisture content	Identify target desiccation zone	ASTM D2216-05	0.5 wt%	≤30%	70-130%
	In situ temperature	Monitor passage of drying front	Thermistor	0-50 °C.	≤0.5 %	99.5-100.5%
	In situ humidity	Monitor passage of drying front	Humidity sensor	0-90% relative humidity	≤2%	98-102%
	In situ matric potential	Monitor passage of drying front	Thermocouple psychrometer	0.2-8 MPa	≤30 kPa	99.7-100.3%

Table 3-11. Additional Physical and Geochemical Analyses of Sediment Samples

Property	Parameter	Reason for Measuring	Method	Reporting Limit	Precision Required	Accuracy Required
	In situ moisture content	Monitor passage of drying front	Heat dissipation unit, Dual-probe heat-pulse sesor	0-saturation	≤0.5 vol%	99.5-100.5%

NOTES: Borehole sample medial will be archived for possible later analysis of other constituents.

ASTM D2216-05, *Standard Test Method for Laboratory Determination of Water (Moisture) Content of Soil and Rock.*

ASTM D2488-06, *Standard Practice for Description and Identification of Soils (Visual-Manual Procedure).*

ASTM D422-63, *Standard Test Methods for Particle-Size Analysis of Soils.*

a. Particle-size distribution measured after moisture content, hydraulic conductivity, and air permeability analyses.

b. From SW-846, *Test Methods for Evaluating Solid Waste: Physical/Chemical Methods*, 3rd Edition, Final Update IV-B.

ASTM = American Society for Testing and Materials

CSM = conceptual site model

N/A = not applicable

Table 3-12. Condensate Analytical Performance Requirements

Nonradiological Analytes					
Type of Analyte	COPCs, Anions, and Cations	Survey or Analytical Method [a]	Condensed Water[b] Reporting Limit (mg/L)	Precision	Accuracy
Anion	Nitrate	EPA Method 9056[e, f]	0.7	≤30%	70-130%
Cation	Sodium	EPA Method 9056[e, f]	5	≤30%	70-130%
Radiological Analytes					
Analyte	Isotope	Analytical Method [g]	Condensed Water[b] MDC (pCi/L)	Precision	Accuracy
COPC	Technetium-99	ICP/MS; EPA 6020 Method 200.8[d], or wet chemical separation and LSC	15 for ICP/MS [g]	≤30%	70-130%
COPC	Gross alpha, beta, and gamma	AEA, GEA, and liquid scintillation	Alpha: 3 pCi/g Beta: 4 pCi/g Gamma: 1 pCi/g	≤30%	70-130%

NOTE: Borehole sample media will be archived for possible later analysis of other constituents.

a. Analytical method selection is based on available methods by laboratories currently contracted to the Hanford Site. Four-digit methods are from SW-846, *Test Methods for Evaluating Solid Waste: Physical/Chemical Methods*, 3rd Edition, Final Update III-B.

b. Typical reporting limit or MDC based on current Hanford Site laboratory contracts or are adjusted based on the project requirements. Detection limits in subsequent documents may differ, depending on method selection and the contract laboratory.

d. EPA/600/R-94/111, *Methods for the Determination of Metals in Environmental Samples, Supplement 1.*

e. Sediment anion analyses performed on 1:1 solid to water leach, followed by EPA Method 300 ion chromatograph analysis (EPA/600/R-93/100). Sediment cation analyses performed after concentrated hot acid extract (SW-846, EPA Method 3050b) or total microwave digestion.

f. EPA/600/R-93/100, *Methods for the Determination of Inorganic Substances in Environmental Samples.*

g. Specific methods vary depending on laboratory.

h. Based on assumption that vadose zone porewater volume <10 mL.

AEA = alpha energy analysis

COPC = contaminant of potential concern

EPA = U.S. Environmental Protection Agency

ICP/MS = inductively coupled plasma/mass spectrometer

GEA = gamma energy analysis

LSC = liquid scintillation counter

MDC = minimum detectable concentration

This page intentionally left blank.

4. Step 4 – Define the Boundaries of the Study

4.1 Objective

In Step 4, the DQO team identifies the spatial, temporal, and practical constraints on the sampling design and considers the consequences. This objective (in terms of the spatial, temporal, and practical constraints) ensures that the sampling design results in the collection of data that accurately reflect the true condition of the site and/or populations being studied.

DQO Step 4 is a critical aspect of DQO studies, as it focuses attention on the areas of significance from a decision-making standpoint. Spatial decision units will be established with application priorities that lead directly to development of the sampling design in DQO Step 7.

4.2 Define the Boundaries of the Study

Table 4-1 defines the population of interest to clarify what the samples are intended to represent. The characteristics that define the population of interest are also identified.

Table 4-1. Characteristics that Define the Population of Interest

DS #	Population of Interest	Characteristics
1, 2, 3, and 4	The set of samples and data in the vadose zone associated with the soil desiccation pilot test	Vapor, soil, and water properties and logging data in the test site area
1, 2, 3, and 4	The set of above ground samples collected from the soil desiccation pilot test	Injected and extracted gas pressure, flow rate, temperature, and composition
3	The set of parameters defining the economics and practicability of the test	Well spacing, operational cost, desiccation rate, and rewetting rate

DS = decision statement

The BC Cribs and Trenches area was selected for the soil desiccation pilot test because its waste sites contain mobile contamination that is held up in the vadose zone. A contaminated portion was selected to accelerate the overall assessment of soil desiccation as a potential remediation technology and to perform actual remediation, as applicable. In anticipation of this decision, the three boreholes installed in FY08 to ground truth the electrical resistivity characterization data previously collected were completed as vapor injection/extraction wells. The screen intervals were located to intersect a relatively shallow region of high moisture and contamination in each case.

Table 4-2 defines the spatial boundaries of the decision and the domain or geographic area (or volume) within which all decisions must apply. The domain is a region distinctly marked by some physical features (i.e., volume, length, width, and boundary).

Table 4-2. Geographic Boundaries of the Investigation

DS #	Geographic Boundaries of the Investigation
1, 2, 3, and 4	A 61-m (200-ft)-diameter circle centered on well 299-E13-62 (borehole C5923) in the BC Cribs and Trenches area from the ground surface to 21.3 m (70 ft) bgs.

bgs = below ground surface
DS = decision statement

This study focuses on well 299-E13-62 (borehole C5923) and its immediate vicinity. This location was selected because the region containing significant moisture and contamination is higher in the vadose zone (hence, is more accessible from the surface) than at borehole C5924 (borehole C5925 did not exhibit any contamination). The 21.3-m (70-ft)-bgs depth is conservative based on data from the proposed test borehole (C5923), which ensures capture of the interval with elevated moisture and technetium-99 concentrations. The 61 m (200 ft) diameter centered on the injection well is tentatively set to encompass their regions of pressure influence. This value could increase based on the characterization test data and/or initial extraction operation of the extraction wells.

In this part of DQO Step 4, the population is divided into strata that have similar characteristics. The ultimate goal is to define the decision units important to the sampling design. The DQO team must evaluate process knowledge, historical data, and plant configurations to establish the logic that supports alignment of the population into strata and decision units. Figure 4-1 illustrates the strata of interest, and Table 4-3 defines these strata. For the purpose of initial definition, it is assumed that a ring of equi-spaced extraction wells surround the injection well.

Zones were selected based on the following properties:

- Zone D is of primary interest because it will be the zone of most significant desiccation during the test.
- Zone E is at the same depth interval as Zone D but extends out to the extraction wells. It is of interest because there will be significant air flow in the region, and zones of high permeability may dry out in this region. This zone is also a boundary for rewetting.
- Zone F is of interest because it is an area with high air flow induced by the extraction wells and will experience some changes in water content. This zone is also a boundary for rewetting.
- Zone A is directly above the desiccated zone. This zone is of interest as a boundary for rewetting (e.g., a moisture source and path for surface recharge following the active portion of the test) and as an area where some air flow may occur during the desiccation process.
- Zone B is an area where some air flow may occur during the desiccation process and may have some boundary impact for rewetting.
- Zone C is an area where some air flow may occur during the desiccation process and may have some boundary impact for rewetting. However, this zone is the least impacted by the test.
- Zone G is directly below the desiccated zone. This zone is of interest as a boundary for rewetting (e.g., a moisture source and path for surface recharge following the active portion of the test) and as an area where some air flow may occur during the desiccation process.

- Zone H is an area where some air flow may occur during the desiccation process and may have some boundary impact for rewetting.
- Zone I is an area where some air flow may occur during the desiccation process and may have some boundary impact for rewetting. However, along with Zone C, this zone is the least impacted by the test.

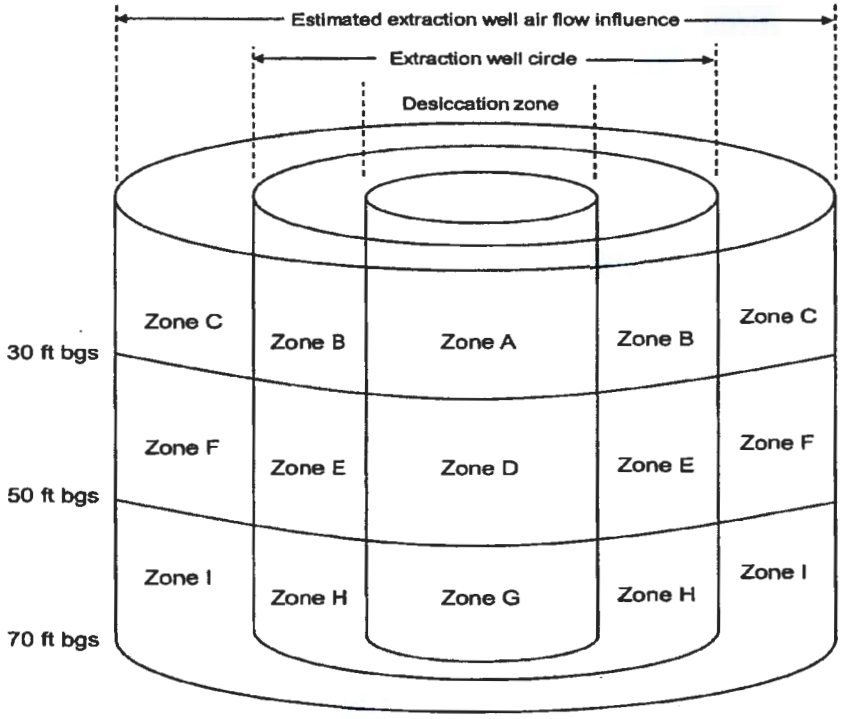

Figure 4-1. Distribution of Zones for Targeted Monitoring

Within the target sampling zone, it is expected that sample analysis will proceed, in part, on the basis of sediment lithology and moisture content to ensure characterization of the strata that will be the eventual desiccation target during the pilot test.

The temporal boundaries of the decision are defined in Table 4-4.

Table 4-3. Strata with Similar Characteristics (2 pages)

DS #	Population of Interest	Strata	Similar Characteristic Logic
1, 2, and 4	The set of sediment samples, soil gas, and data from Zone D of Figure 4-1	Well screened interval of approximately 9 to 15 m (30 to 50 ft) bgs. Lateral focus is on the region anticipated to be desiccated (≤6-m [≤19.7-ft] radius centered on the injection well)	Zone of most significant desiccation anticipated during the test
	The set of sediment samples and data from Zone E of Figure 4-1	Same depth interval as Zone D. Lateral focus extends from the outer edge of Zone D out to the extraction wells located approximately 12 m (39 ft) from the injection well.	Region will have significant air flow in and zones of high permeability may dry out. This zone is also a boundary for rewetting.
	The set of sediment samples and data from Zone F of Figure 4-1	Same depth interval as Zones D and E. Lateral focus extends beyond the extraction wells approximately 12 m (39 ft) from the injection well.	Region with high air flow induced by the extraction wells and may experience some changes in water content. This zone is also a boundary for rewetting.
	The set of sediment samples and data from Zone A of Figure 4-1	Same lateral dimensions as Zone D but extending approximately 3 m (10 ft) above Zone D.	Region is of interest as a source for rewetting (e.g., a moisture source and path for surface recharge following the active portion of the test) and as an area where some air flow may occur during the desiccation process.
	The set of sediment samples and data from Zone B of Figure 4-1	Same lateral dimensions as Zone E and vertical dimensions as Zone A.	Zone B is an area where some air flow may occur during the desiccation process and may have some boundary impact for rewetting.
	The set of sediment samples and data from Zone C of Figure 4-1	Same lateral dimensions as Zone F and vertical dimensions as Zones A and B.	Region least impacted, but still affected by the test. Zone C is an area where some air flow may occur during the desiccation process and may have some boundary impact for rewetting.
	The set of sediment samples and data from Zone G of Figure 4-1	Same lateral dimensions as Zone D, but extending approximately 3 m (10 ft) below Zone D.	Region is of interest as a source for rewetting (e.g., a moisture source and path for surface recharge following the active portion of the test) and as an area where some air flow may occur during the desiccation process.
	The set of sediment samples and data from Zone H of Figure 4-1	Same lateral dimensions as Zone E and vertical dimensions as Zone G.	Zone H is an area where some air flow may occur during the desiccation process and may have some boundary impact for rewetting.
	The set of sediment samples and data from Zone I of Figure 4-1	Same lateral dimensions as Zone F and vertical dimensions as Zones G and H.	Region least impacted, but still affected by the test. Zone I is an area where some air flow may occur during the desiccation process and may have some boundary impact for rewetting.

Table 4-3. Strata with Similar Characteristics (2 pages)

DS #	Population of Interest	Strata	Similar Characteristic Logic
1, 2, and 4	Soil gas in the vicinity of well 299-E13-62 (borehole C5923) in the BC Cribs and Trenches area	All zones.	The soil gas results from zones surrounding the screened well interval that extends above the top elevation (9 m [30 ft] bgs) and below the bottom elevation (15 m [50 ft] bgs). See Figure 4-1.
1, 2, and 4	Gas and associated water vapor from extraction wells	Anticipated gas collection zone is from ground surface to approximately 21.3 m (70 ft) below grade. Focus is on well screened interval of approx 9 to 15 m (30 to 50 ft) bgs, plus a "buffer" of approximately 5 m (16.4 ft) above and below the screened interval.	Gas will originate from region surrounding the extraction wells with the majority coming from the direction of the single injection well.
3	Operational parameters	Data related to injected/extracted air conditioning requirements, power consumption, and staffing.	Operational data for specific pilot test.

a. Volume of sediment anticipated to be desiccated is based on assumption that a single extraction well will remove 300 scfm soil gas that is saturated with water (13 g H_2O/m^3 @ 15°C). Also assumed is that desiccation will reduce average moisture content from 10 wt% to 5 wt%, sediment density is 1,800 kg/m^3, and that the period of active desiccation is 6 months. Final assumption is that 100% of extracted air originates at the injection well. Thus, the maximum estimated extent is based on the following calculation:

$$13\ g\ H_2O/m^3 \times 300\ ft^3/min \times m^3/35.3\ ft^3 \times 60\ min/hr \times 24\ h/day \times 180\ day \times kg/1{,}000\ g = 28{,}637\ kg\ H_2O$$

Mass sediment desiccated is 28,637 kg/0.05 = 572,740 kg.

Volume sediment desiccated is 572,740 kg/1,800 kg/m^3 = 318 m^3.

With a 6.1–m (20-ft)-thick interval, in cylinder form, this volume has a radius of approximately 4.07 m (13.4 ft).

bgs = below ground surface

DS = decision statement

Table 4-4 Temporal Boundaries of the Investigation

DS #	Timeframe	When to Collect Data
1, 2, and 3	Avoid freezing conditions	Hanford Site soil vapor extraction experience focused on carbon tetrachloride removal from the vadose zone has shown that operations should be limited to the April 1 to October 1 timeframe to avoid the potential for condensate freezing, to allow diffusion of volatiles into the zone of extraction, and to take advantage of the higher vapor pressure of the volatiles when ambient temperature is higher. For the soil desiccation pilot test, only condensate freezing and, potentially, diffusion of water from fine-grained strata into the extraction flow path are considerations ("rebound"). Although system design and operation are simplified by avoiding freezing conditions, test design can provide flexibility to address the need to continue operation rather than shut down for the winter.
4	Any time	Any time

DS = decision statement

4.3 Scale of Decision Making

Table 4-5 defines the scale of decision making for each DS. The scale of decision making is defined as the smallest, most appropriate subsets of the population (subpopulation) for which decisions will be made based on the spatial or temporal boundaries of the area under investigation.

Table 4-5. Scale of Decision Making

DS #	Population of Interest	Geographic Boundary	Temporal Boundary: Timeframe	Temporal Boundary: When to Collect Data	Decision Units
1, 2, and 4	The set of sediment samples and data in the vicinity of well 299-E13-62 (borehole C5923) in the BC Cribs and Trenches area	A 30-m (approximately 100-ft) diameter circle, centered on well 299-E13-62 (borehole C5923) in the BC Cribs and Trenches area, from ground surface to 21.3 m (70 ft) bgs.	Prior to period of active desiccation	Any	Soil desiccation Zones A, B, C, D, E, F, G, H, or I in accordance with Figure 4-1
1, 2, and 4	The set of sediment samples and data in the vicinity of well 299-E13-62 (borehole C5923) in the BC Cribs and Trenches area	A 30-m (approximately 100-ft) diameter circle, centered on well 299-E13-62 (borehole C5923) in the BC Cribs and Trenches area, from ground surface to 21.3 m (70 ft) bgs.	During period of active desiccation April 1 to October 1[a]	Any	Soil desiccation Zones A, B, C, D, E, F, G, H, or I in accordance with Figure 4-1
1, 2, and 4	The set of sediment samples and data in the vicinity of well 299-E13-62 (borehole C5923) in the BC Cribs and Trenches area		Following the active desiccation portion of the test	Initial sampling within 3 months of end of active desiccation.	Soil desiccation Zones A, B, C, D, E, F, G, H, or I in accordance with Figure 4-1
3	Operational parameters		During test performance	Continuous	N/A

[a] period of active pumping may be extended based on observed progress of drying front.

bgs = below ground surface

DS = decision statement

N/A = not applicable

4.4 Practical Constraints

Table 4-6 identifies all of the practical constraints that may impact the data collection effort. These constraints include physical barriers, difficult sample matrices, high radiation areas, or any other condition that will need to be taken into consideration in the design and scheduling of the sampling program.

Table 4-6. Practical Constraints on Data Collection

- Avoid subsurface facilities and underlying pipelines.
- Avoid areas of high contamination associated with individual cribs; refer to the treatability test plan (DOE/RL-2007-15) Phase 3 logging data.
- Surface stabilization cover may be required prior to drilling. This surface stabilization may hamper direct-push technology penetration.
- Sampling by direct-push technology may be depth-limited because of geologic features that cause refusal.
- Health and safety constraints may be imposed during characterization sampling to ensure that as low as reasonably achievable issues are properly addressed when sampling potentially radiologically contaminated soils.
- Extreme weather conditions, particularly freezing temperatures, may limit or shut down field operations. Consider avoiding freezing conditions; otherwise, provide freeze protection for anticipated condensate accumulation.
- Access to liquid waste discharge sites may be limited by worker protection requirements or radiological or other constraints.
- A potential exists for crib structure subsidence near the center of each crib. Field activities should be excluded from these areas.

NOTE: DOE/RL-2007-15, *Excavation-Based Treatability Test Plan for the BC Cribs and Trenches Area Waste Sites.*

This page intentionally left blank.

5. Step 5 – Develop a Decision Rule

The purpose of DQO Step 5 is initially to define the statistical parameter of interest (i.e., maximum, mean, or 95% upper confidence level) that will be used for comparison against the action level. The statistical parameter of interest specifies the characteristic or attribute that a decision maker would like to know about the population. The preliminary action level for each of the contaminants of concern (COCs) is also identified in DQO Step 5. When this is established, a decision rule (DR) is developed for each DS in the form of an "IF…THEN…" statement that incorporates the parameter of interest, the scale of decision making, the preliminary action level, and the AAs that would result from resolution of the decision. Note that the scale of decision making and AAs were identified earlier in DQO Steps 4 and 2, respectively.

5.1 Inputs Needed to Develop Decision Rules

Tables 5-1, 5-2, and 5-3 present the information needed to formulate the DRs in Section 5.2. This information includes the DSs and AAs identified in DQO Step 2, the scale of decision making identified in DQO Step 4, and the statistical parameters of interest and preliminary action levels for each of the COCs.

Table 5-1. Decision Statements

DS #	Decision Statement
1	Determine whether soil desiccation can significantly reduce sediment moisture content, or if not, a different remedy must be considered; or if it is not, consider abandoning desiccation as a practical remedy.
2	Determine whether a significant rate of sediment desiccation can be accomplished during the test, or if not, consider abandoning desiccation as a practical remedy; or if not, consider abandoning desiccation as a practical remedy.
3	Determine the cost of performing sediment desiccation; or if not, consider abandoning desiccation as a practical remedy.
4	Determine whether soil desiccation exhibits long-term effectiveness that protects groundwater; or if not, consider abandoning desiccation as a practical remedy.

DS = decision statement

Table 5-2. Inputs Needed to Develop Decision Rules

DS #	Environmental Variable	Parameter of Interest	Scale of Decision Making	Action Levels
1	Moisture content reduction in the central sediment desiccation zone	Detected, or average values as appropriate	Soil desiccation Zone D, as shown in Figure 4-1	Test goal values in Table 3-1
2	Desiccation rate	Temporal change in data that measures directly or can be interpreted to determine moisture content	Soil desiccation Zone D	Test goal values in Table 3-1
3	Cost	Estimated cost based on treatability study results	Total estimated cost	Total estimated cost to remediate groundwater at selected Operable Unit
4	Contaminant flux into groundwater	Simulated long-term moisture content profile	Soil desiccation Zone D	Determined by numerical simulation

DS = decision statement

5.2 Decision Rules

The output of DQO Step 5 and the previous DQO steps are combined into "IF...THEN" DRs that incorporate the parameter of interest, the scale of decision making, the action level, and the actions that would result from resolution of the decision. The DRs are listed in Table 5-3.

Table 5-3. Decision Rules

DR #	Decision Rule
1	If the true population (as estimated by the detected or average values as appropriate) soil moisture in central soil desiccation Zone D has been reduced to ≤5 wt% sediment moisture content during the soil desiccation treatability test, then consider it as a potential groundwater protection remedy; otherwise, consider abandoning desiccation as a practical remedy unless more detailed analysis shows the extent of desiccation achieved to be acceptable.
2	If the true population (as estimated by the detected or average values as appropriate of temporal moisture content change) rate of sediment desiccation in soil desiccation Zone D is greater than or equal to a soil desiccation rate of 53 m^3-sediment/month and at least 85% of the extracted gas originates from the injection well during the soil desiccation treatability test, then consider it as a potential groundwater protection remedy; otherwise, consider abandoning desiccation as a practical remedy unless more detailed analysis shows the extent of desiccation achieved to be acceptable.
3	If the total cost of performing soil desiccation can be estimated, then consider it as a potential groundwater protection remedy; or if not, consider abandoning desiccation as a practical remedy.
4	If soil desiccation exhibits long-term effectiveness that protects groundwater (as estimated by numerical simulation using input from the test), then it may be considered as a potential groundwater protection remedy; or if not, consider abandoning desiccation as a practical remedy unless more detailed analysis shows the extent of desiccation achieved to be acceptable.

DR = decision rule

This page intentionally left blank.

6. Step 6 – Specify Tolerable Limits on Decision Errors

Because analytical data can only estimate the true condition of the site under investigation, decisions that are made based on measurement data could potentially be in error (i.e., decision error). For this reason, the primary objective of DQO Step 6 is to determine which DSs (if any) require a statistically based sample design. For those DSs requiring a statistically based sample design, DQO Step 6 defines tolerable limits on the probability of making a decision error.

This DQO process is unique because it supports a full-scale test. The vadose zone sampling is based on simple sampling concepts developed by professional judgment and conventional engineering practices to establish the sampling frequencies and focus data acquisition in locations that support decision-making needs. Similar reasoning applies to data collected from aboveground instrumentation that monitors gas pressures/compositions. Therefore, statistical sampling is not needed or employed for this test. Consequently, the methods normally used to quantify uncertainty cannot be used to probabilistically determine decision errors.

6.1 Uncertainty Discussion

Because a judgmental sampling design has been selected, uncertainty is evaluated for each of the decisions in this study. The object of this study is to evaluate soil desiccation. Within the study area, the soil and soil gas properties are expected to fall within certain ranges based on prior characterization efforts in the BC Cribs and Trenches area. The available analytical methods are not likely to yield false-negative or false-positive values based on the expected range of values. Therefore, the ability to assess soil desiccation with available sampling and analytical methods is considered adequate to answer the study questions with a reasonable degree of confidence.

Judgmental data collection design is applicable to the investigation because of the high costs associated with sampling in the deep vadose zone and because sampling must be focused in specific areas of concern.

Uncertainty may increase with the depth in this study, because variations in the soil matrix could affect the overall soil and soil gas properties. A qualitative ranking of uncertainty for the decisions in this study is provided in Table 6-1.

Table 6-1. Relative Uncertainty Ranking for Study Decisions (2 pages)

DS #	Decision	Relative Uncertainty Ranking – Explanation
1	Determine whether soil desiccation can significantly reduce sediment moisture content; or if not, a different remedy must be considered.	Low: Soil vapor extraction experience has shown that considerable quantities of water can be removed from the subsurface. Also, numerical simulation has shown that sediment moisture content is the primary driving force for contaminant transport. Removing the water will remove the driving force.
2	If a significant rate of sediment desiccation can be accomplished during the test, then consider it as a potential groundwater protection remedy; otherwise, consider abandoning desiccation as a practical remedy.	Low to moderate: Average desiccation rate on a volumetric basis can be readily estimated assuming that extracted air is saturated with water vapor. What is uncertain is the shape of the desiccated volume because of the heterogeneity of the sediment and the configuration of injection/extraction wells. It is expected that the drying air will follow paths of least resistance and that overall air permeability will increase as sediment porewater is removed.

Table 6-1. Relative Uncertainty Ranking for Study Decisions (2 pages)

DS #	Decision	Relative Uncertainty Ranking – Explanation
3	Determine cost of sediment desiccation; if not, consider abandoning desiccation as a practical remedy.	Moderate: Because overall cost will be dependent on long-term effectiveness, which will be characterized by moderate uncertainty, overall cost will have similar uncertainty.
4	Determine whether soil desiccation exhibits long-term effectiveness that protects groundwater; if not, consider abandoning desiccation as a practical remedy.	Moderate: Despite using site-specific characterization data as input for numerical simulations, assumptions regarding the heterogeneity of the vadose zone must be made.

DS = decision statement

7. Step 7 – Optimize the Design

7.1 Purpose

The purpose of DQO Step 7 is to identify the most resource-effective design for generating data to support decisions while maintaining the desired degree of precision and accuracy. When determining an optimal design, the following activities are performed:

- Review the DQO outputs from the previous DQO steps and the existing environmental data
- Develop general data collection design alternatives
- Select the sampling design (e.g., techniques, locations, or numbers/volumes) that most cost-effectively satisfies the project's goals
- Document the operational details and theoretical assumptions of the selected design.

7.2 Optimize the Design

Table 7-1 identifies information in relation to determining the data collection design.

Table 7-1. Determine Data Collection Design

DS #	Statistical	Non-Statistical	Rationale
1, 2, 3, and 4	N/A	Non-statistical sampling design	Judgmental data collection design is applicable to the investigation because of the high costs associated with sampling in the deep vadose zone and because sampling must be focused in specific areas of concern.

N/A = not applicable

The data collection alternatives for this project are described in Table 3-8. Additional assessment of these alternatives was not conducted because the data collection methods presented in Section 3 were either (1) selected directly from a previous sampling and analysis plan for the BC Cribs and Trenches area in which the methodologies were already reviewed, or (2) are based on the industry standard method for testing (e.g., from soil vapor extraction design manuals). The primary elements of the sampling design that must be determined are as follows:

- Descriptions of sample locations, strata, inaccessible areas, and maps (if beneficial)
- Directions for selecting sample locations (if the selection is not necessary or appropriate at this time)
- Order in which samples should be collected (if important)
- Stopping rules (if applicable)
- Special sample collection methods
- Special analytical methods.

7.3 Sampling Objectives

It was concluded that additional data are required for the decisions being made; therefore, additional characterization is desired. The characterization objectives identified in Section 1.3 result in the data collection goals shown in Table 7-2.

Table 7-2. Data Collection Goals and Drivers (2 pages)

Data Collection Goals	Waste Site	Sampling Area/ Volume	Driver
Determine baseline sediment moisture and contaminant concentrations with depth at selected locations	200-BC-1 Operable Unit, cribs area	Focus on region anticipated to be desiccated to assess desiccation rate and surrounding area which is a "reservoir" for rewetting following the period of active desiccation.	Define baseline sediment moisture and contaminant concentrations
Obtain baseline sediment physical properties data		Focus on region anticipated to be desiccated to assess desiccation rate and surrounding area which is a "reservoir" for rewetting following the period of active desiccation.	Define baseline vadose zone air permeability and contaminant transport modeling input parameters
Determine volume, temperature, pressure, and humidity properties of injected air		Injection well input	Define test parameters
Determine volume, temperature, pressure, and humidity properties of extracted air		Extraction well output.	Monitor desiccation progress
Determine change in moisture content of specific strata versus time of operation		Focus not only on region anticipated to be desiccated (vicinity of injection well toward the extraction well), but also on regions anticipated to be affected by the extraction well.	Determine desiccation rate/rate of rewetting
Monitor desiccation activity operational parameters		Aboveground instrumentation.	Collect operations and cost data; measure effects of injected air pressure and flow rate; measure extracted air temperature, pressure, humidity, and flow rate
Monitor pressure differences between monitoring points and boreholes		Selected monitoring points from the extraction well. Locations should include and extend beyond the anticipated region of desiccation.	Determine/confirm range of pressure influence
Monitor composition of gas (including tracer gases) sampled from monitoring points and extraction wells		Selected monitoring points between the injection well and the extraction well. Locations should include and extend beyond the anticipated region of desiccation.	Assist in monitoring desiccation rate
Monitor composition of condensate		Aboveground condenser sampling station.	Assist in waste designation for condensate disposal

Table 7-2. Data Collection Goals and Drivers (2 pages)

Data Collection Goals	Waste Site	Sampling Area/ Volume	Driver
Monitor post-desiccation sediment moisture content (sediment sampling)		Desiccated region and its perimeter.	Ground-truth the geophysical data and in situ instruments that define sediment moisture content and soil gas humidity
Monitor post-desiccation sediment solute (Tc-99 and nitrate) content (sediment sampling)		Desiccated region and its perimeter.	Determine whether solute concentration occurred during desiccation

7.4 Non-Statistical Implementation Design

The decisions in this DQO effort address conducting and evaluating the soil desiccation treatability pilot test that will be conducted in the near-surface vadose zone in the vicinity of well 299-E13-62.

The initial sampling design activity is to define the final test design. Although the DQO team initially selected a four-well system where three equally spaced extraction well surrounded a central injection well, a two-well configuration was selected based on input from an independent expert panel (SGW-41975). The expert panel recommended the simpler design to reduce uncertainty of collecting representative data while promoting better understanding of subsurface flow conditions, heterogeneities, and desiccation performance.

Additional small diameter boreholes will be installed to monitor desiccation progress. The five instrumented holes installed during the characterization phase will be supplemented with approximately 31 additional holes to monitor sediment and soil gas properties, and provide geophysical logging capability during the test. Most of these holes are located near well 299-E13-62 to ensure that they will be within or just beyond the desiccation zone for the anticipated 6-month desiccation period planned for the test. A "cluster" of monitoring holes is recommended at each monitoring location to provide redundant capability to assess desiccation progress. One of the holes within each cluster will be instrumented to monitor sediment temperature (to capture the temperature drop associated with evaporative cooling as the drying front passes) and in situ electrodes to provide capability to evaluate electrical resistivity tomography as a tool to monitor desiccation progress. Those same holes will also provide capability to measure soil gas humidity, collect soil gas samples to evaluate tracer gas content as a measure of assessing desiccation progress, measure soil gas humidity, and measure sediment moisture content or matric potential. Another hole in each monitoring cluster will be configured to permit neutron logging and cross-hole radar logging to assess sediment moisture content.

Additional in situ sediment air permeability data will be collected in the test area. Large-scale data will be collected from the extraction well by performing stepped-rate and constant-rate tests (per the US ACE). Measurements will monitor differential pressures between the well and appropriately instrumented monitoring holes. Data will allow for calculation of an effective air permeability of the sediment between the measurement locations.

During the active portion of the test, extracted air will be characterized with respect to flow rate, pressure, and humidity. Injected air will be similarly characterized to define test conditions. The need and frequency of condensate sampling will be based on the results from the characterization testing (DOE/RL-2008-67). These parameters are listed in Table 3-12. In situ measurement of sediment and soil gas properties will proceed using instrumentation described above.

Another test objective is to determine the cost of performing soil desiccation. Operational parameters will be determined, such as capital equipment requirements, installation and testing, power consumption, monitoring, and staffing. Estimating capital equipment needs associated with full-scale deployment will require an estimate of well spacing to address a larger area of contamination.

Finally, post-desiccation testing is necessary to evaluate desiccation effectiveness by ground truthing the geophysical data that was collected during the period of active desiccation, and to monitor rewetting of the desiccation region by surrounding sediment that was unaffected by the test. Although the rewetting process is anticipated to be slow relative to the time period planned for the test, requiring reliance on numerical simulation to predict this process, in situ monitoring will continue to obtain data that define the early stages of the transition from active desiccation to equilibrium. A key parameter is the duration that soil moisture is retained below a target level, based on modeling predictions.

The footnote associated with Table 4-3 provides the basis for conducting the desiccation portion of the test for a 6-month period. Assuming a cylindrical desiccation volume of uniform radius (highly unlikely), the desiccation front is predicted to advance up to approximately 4 m (13 ft) out from the injection well toward the extraction well with a 300 cfm injection flow rate. In actuality, the desiccated volume is expected to have more of an ellipsoid shape and thus, extend further toward the extraction well. This volume is deemed sufficient to enable comprehensive data collection to satisfy the test objectives. If, during conduct of the test, advance of the drying front is slower than predicted, it may be necessary to extend the period of active desiccation to quantify the desiccation rate. Other adjustments may be warranted, based on initial results.

Table 7-3 describes the sampling design elements.

Table 7-3. Sampling and Data Collection Design (2 pages)

Sample Collection Methodology	Key Features of Design	Basis for Sampling Design
Baseline Data		
Extraction borehole air permeability testing per manual EM 1110-1-4001	Extracting air and measuring vacuum response can be interpreted to determine the bulk air permeability in the zone of vacuum influence.	Collect data to infer in situ bulk sediment air permeability.
Design, procurement, installation, & testing cost	Cost accounting system	Develop cost estimate for deployment
Depth-discrete flow from injection and extraction wells via PneuLog® technology	Logging system capable of evaluating flow variability from screened section of well	Provides localized in situ air permeability data
During Desiccation Period		
Instrumented extraction well and monitoring holes	Continually measure sediment temperature.	Monitor desiccation progress.
	Continually measure soil gas humidity	Monitor desiccation progress.
	Periodically extract soil gas through installed collection tube; continually collect in-hole pressure data	Evaluate concentrations of tracer gas; monitor in-hole pressure.
	Periodically perform cross-hole radar logging of selected monitoring holes.	Monitor near- and far-field desiccation progress.
	Periodically perform neutron logging of selected monitoring holes.	Monitor near-field desiccation progress
	Continually measure sediment matric potential and moisture content	Monitor desiccation progress
	Periodically perform ERT assessment.	ERT assessment may indicate desiccation progress.
Aboveground instrumentation	Analyze condensate for contaminant content.	Monitor desiccation progress. Support condensate disposition.
	Continually monitor injected flow rate, pressure, gas temperature, and humidity.	Expect to perform test using constant-temperature/constant humidity injected gas. Evaluation of parameter variations may allow evaluation of their effect on the desiccation process.
	Continually monitor extracted gas flow rate, pressure, temperature, and humidity.	Monitor desiccation progress
Operational cost	Cost accounting system	Develop cost estimate for deployment
Post-Desiccation Period		
Following active desiccation (at least 5 years)	Air permeability testing per manual EM 1110-1-4001 at injection and extraction wells	Provides measure of overall change in area air permeability as a result of the test

Table 7-3. Sampling and Data Collection Design (2 pages)

Sample Collection Methodology	Key Features of Design	Basis for Sampling Design
	Periodically perform neutron logging of selected monitoring holes.	Provides assessment of near-field sediment moisture content to monitor rewetting dynamics.
	Periodically perform cross-hole radar logging of selected monitoring holes.	Provides assessment of near- and far-field sediment moisture content to monitor rewetting dynamics.
	Continually monitor soil moisture content.	Provides independent assessment of sediment moisture content.
	Sample sediment in selected locations to confirm final moisture content and contaminant concentrations.	Ground truths the geophysical data relating to moisture content and provides evaluation whether solute concentration occurred.
	Continually monitor soil temperature and humidity.	Correlates with evaporation/ condensation.
Operational cost	Cost accounting system	Refine cost estimate for deployment

NOTE: EM 1110-1-4001, *Soil Vapor Extraction and Bioventing Engineering Manual.*

PneuLog® is a registered trademark of Praxis Environmental Technologies, Inc., Burlingame, CA

ERT = electrical resistivity tomography

Table 7-4 describes the in situ instrumentation and sampling capability that should be used to satisfy the sampling design provided in Table 7-3.

Spatial sampling locations consider the estimated desiccated sediment volume (see footnote in Table 4-3) and surrounding strata that may be affected during test performance. A preliminary lateral layout for the sampling locations is shown in Figure 7-1. This layout considers which locations should be designated for specific instrumentation to measure temperature, gas sampling, humidity, and matric potential; which locations should be designed to permit neutron logging; which locations should be designed for cross-hole radar; and which locations should be designed for future electrical resistivity characterization. In situ instrumentation and characterization tools are designed to monitor movement of the desiccation front and monitor changes in sediment moisture content beyond the desiccated region. Table 7-5 defines the instrumentation associated with each well and monitoring location and provides the basis for selection.

Table 7-4. In Situ Instrumentation

Instrument	Function	Comments
Thermister	In situ probe that provides continuous temperature measurement. Temperature can be a measure of when the desiccation front passes a location (due to evaporative cooling effect).	Easy to install. Robust sensor.
Humidity sensor	In situ probe that provides continuous measurement of soil gas humidity in the 0-90% relative humidity range. Humidity will remain near 100% relative humidity until the desiccation front passes.	Region to be assessed requires isolation. Robust sensor.

Thermocouple psychrometer	In situ probe that provides continuous measurement of soil gas humidity in the 90-100% relative humidity range. Humidity will remain near 100% relative humidity until the desiccation front passes.	Region to be assessed requires isolation. Probe may be sensitive to degradation.
Gas sampler	Soil gas samples can be periodically collected to be used to monitor movement of tracers that can be used as indicator of desiccation. Comparing conservative tracers to those that are retarded by the presence of water can be used to evaluate soil moisture along the flow path of the tracers. Coupled with an aboveground pressure transducer, soil gas pressure at the monitoring screen location can be continually measured. Pressure drop between locations is proportional to air permeability. Air permeability will increase as soil dries.	Region to be assessed requires isolation.
Neutron probe	Periodic logging to determine vertical soil moisture profile.	Requires coordination with other activities.
Ground-penetrating radar probe (cross-hole radar)	Two- or three-dimensional depiction of radar response. Potential to track changes in moisture content by observing differences in radar signal. Used to infer lithology.	Requires coordination with other activities.
Heat dissipation unit	In situ probe that collects data to calculate sediment water pressure. Also measures sediment temperature.	Needs to be in contact with native soil. May require significant equilibration period.
Dual-probe heat-pulse sensor	In situ probe that collects data to calculate sediment moisture content.	Needs to be in contact with native soil. May require significant equilibration period.
Resistivity electrodes	Allows use of electrical resistance tomography (two- or three-dimensional depiction of sediment resistance to electrical current). Potential to track changes in moisture content and solute concentration. Response to desiccation will be a combination of drying and increases in solute concentration. Drying increases resistance. Increased solute concentrations decrease resistance.	Robust probe. Requires coordination with other activities.

Figure 7-1 displays the layout of the SDPT that includes locations of monitoring clusters. The primary focus of data collection is along a line connecting the injection well 299-E13-62 and extraction well 299-E13-65 to the northeast. Instrumentation is clustered at locations to interpret the desiccation progress. Passage of the drying front will be inferred from sediment temperature changes that will be measured using thermisters and/or heat dissipation units, from humidity sensors, and from sediment gas samples that evaluate tracer gas concentrations. Sediment moisture content will be measured using the heat dissipation units (indirectly, by measuring sediment matric potential), dual-probe heat-pulse sensors, and periodic neutron logging and cross-hole radar. Electrical resistivity characterization will be performed using electrodes emplaced in one of the holes at each monitoring location. This is expected to corroborate the spatial moisture variations indicated by other measurement methods.

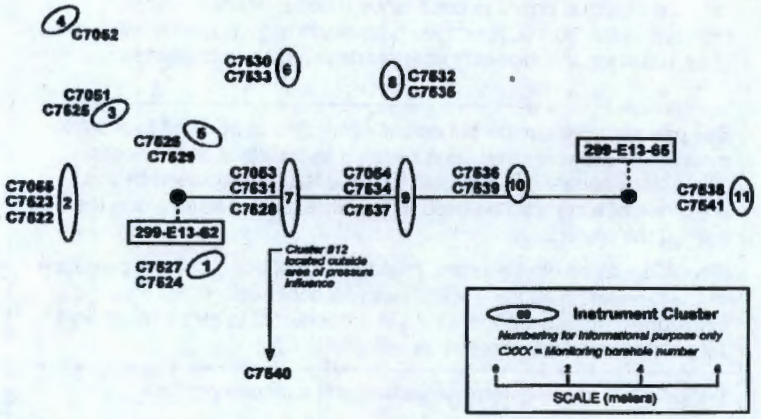

#1	all intruments + logging
#2	existing instruments + add'l instruments + logging
#3	existing instruments + logging
#4	existing instruments
#5	existing instruments + logging
#6	existing instruments + logging
#7	existing instruments + add'l instruments + logging
#8	existing instruments + logging
#9	existing instruments + add'l instruments + logging
#10	existing instruments + logging
#11	existing instruments + logging
#12	all instruments

CHPRC0909-23.1

Notes:

1. Borehole locations are approximate. Adjustment is anticipated to allow unobstructed line-of-sight between holes to be used for cross-hole radar.
2. Numbers adjacent to individual monitoring hole clusters provide unique borehole identification.

Figure 7-1. Tentative Layout of Soil Desiccation Pilot Test Wells and Monitoring Holes

Table 7-5 In Situ Instrumentation Locations and Basis (2 pages)

Location	Instrument	Depth	Basis
Separate hole in each monitoring cluster	Thermister	Every 0.6 m (2 ft), from 3.4 to 21 m (11 to 69 ft)	Monitor passage of desiccation front by measuring sediment temperature.
	Electrode	Every 1.2 m (4 ft), from 3.0 to 20.7 m (10 to 68 ft)	Perform electrical resistivity characterization to assess far-field moisture content.
	Gas sampler	10.7 and 13.7 m (35 and 45 ft)	Monitor desiccation front passage by measuring sediment gas humidity and tracer gas concentrations; measure in situ gas pressure.
	Humidity sensor	~9.9, 11.4, 13.0 and 14.5 m (32.5, 37.5, 42.5, and 47.5 ft)	Monitor desiccation front passage by measuring sediment gas humidity (0-90% RH range)
	Thermocouple psychrometer	~9.9, 11.4, 13.0 and 14.5 m (32.5, 37.5, 42.5, and 47.5 ft)	Monitor desiccation front passage by measuring sediment gas humidity (90-100% RH range)
	Heat dissipation units	~9.9, 11.4, 13.0 and 14.5 m (32.5, 37.5, 42.5, and 47.5 ft)	Monitor passage of desiccation front by measuring sediment temperature and matric potential.
	Dual-probe heat-pulse sensor	~9.9, 11.4, 13.0 and 14.5 m (32.5, 37.5, 42.5, and 47.5 ft)	Monitor moisture content
Separate hole in each monitoring cluster	Neutron logging	Continuous	Monitor near-field moisture change. In contact with native soil.
	GPR	Continuous	Monitor far-field moisture change. In contact with native soil.
Injection well 299-E13-62	Thermister	Every 1.5 m (5 ft), from 8.1 to 15.8 m (26.7 to 51.7 ft)	Monitor expected drying in zone adjacent injection well.
	Electrode	11.9 and 16.6 m (39.2 and 54.5 ft)	Perform electrical resistivity characterization to assess far-field moisture content.
Extraction well C7047	Thermister	Every 0.6 m (2 ft), from 6.4 to 16.8 m (21 to 55 ft)	Monitor sediment temperature in zone opposite injection well.
	Electrode	Every 0.6 m (2 ft), from 6.1 to 16.5 m (20 to 54 ft)	Perform electrical resistivity characterization to assess far-field moisture content.

GPR = ground-penetrating radar (cross-hole radar)

Table 7-6 defines the logic for conditional data collection. Depending on the time period within the test and the specific monitoring location, data may be expected to be changing slowly or not at all, or it may change quite rapidly. Also, data collection should be terminated, or not initiated at all, if conditions render the data meaningless.

Table 7-6. Data Collection Logic (2 pages)

Attribute	Instrument	Data Collection Logic
In Situ Data Collection		
Sediment temperature	Thermister	Baseline Continuous during period of active desiccation Continuous following shutdown of blower for period of time determined by field hydrologist [a]
Sediment moisture content	Heat dissipation unit, Dual-probe heat-pulse sensor	Baseline Continuous during period of active desiccation Continuous following shutdown of blower for period of time determined by field hydrologist [a]
Sediment gas pressure	Gas sampling tube	Baseline Continuous during period of active desiccation
Sediment gas composition	Gas sampling tube	Baseline Periodically; as needed to assess breakthrough of tracer gases and for monitoring humidity Periodically following shutdown of blower for period of time determined by field hydrologist [a]
Soil gas humidity	Humidity probe, Thermocouple psychrometer	Baseline Continuous during period of active desiccation Continuous following shutdown of blower for period of time determined by field hydrologist [a]
Sediment moisture content	Neutron probe (logging)	Baseline Periodically, based on information about drying front obtained through other instruments Periodically following shutdown of blower for TBD months
Sediment moisture content	Cross-hole radar between pairs of logging holes	Baseline for each pair of assessment holes Periodically, based on information about drying front obtained through other instruments Periodically following shutdown of blower for period of time determined by field hydrologist [a]
Aboveground Data Collection		
Injected gas temperature, humidity, pressure, and flow rate	Common instrumentation	Continuous during period of active desiccation
Extracted gas temperature, humidity, pressure, and flow rate	Common instrumentation	Continuous during period of active desiccation
Condensate chemistry, radiological activity	Analysis of collected sample	Periodically, to support disposition of condensate collected.

Table 7-6. Data Collection Logic (2 pages)

Attribute	Instrument	Data Collection Logic
Sediment moisture content and solute concentration	Analysis of collected sediment sample	Baseline Within 4 months after termination of active desiccation Locations (near instrument clusters): • Within desiccated region, including fringe area where solutes may have concentrated • Where disparate geophysical data exist

[a] Response during period of active desiccation and numerical simulation prediction will be considered.

Table 7-7 defines the aboveground instrumentation designed to characterize the injected and extracted gas streams associated with the desiccation test. For each gas stream, the temperature, humidity, and pressure will be monitored. Gas sampling capability will be provided at each extraction well. Condensate sampling capability will provide data to support condensate disposal.

7.4.1 Sampling Priorities

It is important to establish sampling priorities to address potential resource limitations. The highest priority is for data collection from densely spaced monitoring points in a line connecting the injection well with the extraction well. This approach will provide redundant measurements using different geophysical technologies. The next priority would be points not on a line between the injection and extraction wells, but still between them. The lowest priority would be monitoring points "behind" the injection well with respect to the extraction well.

Some ground truthing following the period of active desiccation is considered essential to interpret the geophysical measurements. This activity also can be used to "referee" incongruent geophysical data.

Table 7-7. Aboveground Sampling/Data Collection

Medium	Parameter of Interest	Sampling Location
Injected gas	Temperature Humidity Pressure Flow rate	Before and after conditioning to adjust temperature and humidity
Extracted gas	Temperature Humidity Pressure Flow rate	From extraction well prior to thermal treatment and/or condensation; from blower discharge

Condensate	Rate of accumulation	Collection reservoir
	Gross alpha, beta, and gamma	
	Tc-99	
	Nitrate	

7.4.2 Potential Sample Design Limitations

It is noted that the sampling design does not fill all vadose zone data gaps; however, test results from the shallow region should translate to deeper zones. Modeling and laboratory studies will also be used to address some of the data/information gaps. Focus on deeper strata should reduce the potential for extraction wells to communicate with the surface.

Although locations of the monitoring holes are not expected to intersect high concentrations of cesium-137, contamination levels in certain areas may be significant and would require substantial controls to ensure the health and safety of workers and protection of the environment and equipment during borehole installation.

8. Observations

The following observations of the soil desiccation pilot test were made as a result of this DQO process:

1. Consider additional instrumentation to the wells and monitoring holes prior to decommissioning for long-term rewetting monitoring.
2. Be prepared to expand the arca of l the surface of the test area that is sealed to prevent potential short-circuiting of influx air.
3. Considering the heterogeneity of the vadose zone, desiccation may not proceed entirely as predicted. Consequently, in-progress test adjustments should be anticipated.

The Expert Panel that strongly recommended a test design described as a dipole configuration of injection and extraction wells provided numerous additional recommendations as summarized below. Also included are responses to those recommendations.

	Expert Panel Recommendations	Disposition
1	Discard the proposed 4-well configuration and use instead a 2-well arrangement	Accepted
2	Condition the injected air	Accepted; will dehumidify and heat injected air. Target temperature and humidity will be selected as described by the panel.
3	Extend duration of active desiccation to affect a larger volume of high-moisture content sediment	Under evaluation; will consider extending duration based on in-progress results.
4	Expand baseline data collection 1. collect air permeability data in all available boreholes 2. co-locate monitoring holes to enable correlation of results from various methods 3. ensure period of data collection allows for equilibration of sensors 4. consider the FLUTe liner and PneuLog technologies. In particular, perform PneuLog logging both before and after the test. 5. install a baseline monitoring location outside the zone of influence of the injection/extraction system to be used throughout the period of pumping	1. Accepted; will perform step test and constant rate test in extraction well 2. Accepted; monitoring locations include multiple DPT holes containing various instruments. 3. Accepted. 4. Under consideration 5. Accepted
5	Consider alternative sensors/instrumentation 1. in situ humidity probes as an alternative to soil gas sampling 2. thermocouple psychrometers as a secondary method of measuring soil water potential 3. additional point-scale water content probes such as capacitance probes, time domain reflectometry, and dual-probe heat pulse sensors	1. Accepted 2. Accepted 3. Dual-probe heat-pulse sensor use accepted
6	Emplace gas sampling ports on the basis of lithology	Will attempt to do this, although the fine-grained strata are believed to be quite thin. Targeting them may be problematic.
7	Employ a high data collection frequency based on field conditions; allow flexibility	Accepted.
8	Conduct air permeability measurements following the period of desiccation	Accepted.
9	Use both natural and introduced gases as tracers	Under consideration

10	Initiate rewetting bench experiments ASAP to observe primary and secondary processes, and integrate them into the field test design.	Under consideration
11	Consider horizontal wells	Not accepted for this test, since wells are already installed.
12	Develop metrics for test objectives to allow evaluation.	Test goals already defined in draft DQO
13	Measure post-desiccation air permeability at screened boreholes.	Accepted

This page intentionally left blank.

9. References

ARH-947, 1972, *200 Areas Disposal Sites for Radioactive Liquid Wastes*, Rev. 0, Atlantic Richfield Hanford, Richland, Washington.

BHI-00720, 2002, *Performance Evaluation Report for Soil Vapor Extraction Operations at the Carbon Tetrachloride Site, February 1992 – September 2001*, Rev. 0, Bechtel Hanford, Inc., Richland, Washington. http://www5.hanford.gov/arpir/?content=findpage&AKey=D9190055, http://www5.hanford.gov/arpir/?content=findpage&AKey=D9190061

BHI-00882, 1996, *Airflow Modeling Report for Vapor Extraction Operations at the 200-ZP-2 Operable Unit (Carbon Tetrachloride Expedited Response Action)*, Rev. 0, Bechtel Hanford, Inc., Richland, Washington.

BHI-01119, 1998, *Hanford Site Atlas*, Rev. 1, Bechtel Hanford, Inc., Richland, Washington.

Comprehensive Environmental Response, Compensation, and Liability Act of 1980, 42 U.S.C. 9601, et seq. http://www.epa.gov/superfund/policy/cercla.htm

DOE/RL-94-95, 1997, *Hanford Sitewide Groundwater Remediation Strategy*, Rev. 1, U.S. Department of Energy, Richland Operations Office, Richland, Washington. http://www5.hanford.gov/arpir/?content=findpage&AKey=D197301482

DOE/RL-96-81, 1997, *Waste Site Grouping for 200 Areas Soil Investigations*, Rev. 0, U.S. Department of Energy, Richland Operations Office, Richland, Washington. http://www5.hanford.gov/arpir/?content=findpage&AKey=D197197143

DOE/RL-2004-66, 2004, *Focused Feasibility Study for the BC Cribs and Trenches Area Waste Sites*, Draft A, U.S. Department of Energy, Richland Operations Office, Richland, Washington. http://www5.hanford.gov/arpir/?content=findpage&AKey=DA170624, http://www5.hanford.gov/arpir/?content=findpage&AKey=DA170919, http://www5.hanford.gov/arpir/?content=findpage&AKey=DA171165, http://www5.hanford.gov/arpir/?content=findpage&AKey=DA171467

DOE/RL-2007-15, 2008, *Excavation-Based Treatability Test Plan for the BC Cribs and Trenches Area Waste Sites*, Rev. 0, U.S. Department of Energy, Richland Operations Office, Richland, Washington. http://www5.hanford.gov/apir/?content=findpage&Akey=DA06940526

DOE/RL-2007-56, 2008, *Deep Vadose Zone Treatability Test Plan for Hanford Central Plateau*, Rev. 0, U.S. Department of Energy, Richland Operations Office, Richland, Washington. http://www5.hanford.gov/arpir/?content=findpage&AKey=0804160110

DOE/RL-2008-67, 2008, *Sampling and Analysis Plan for Characterization of the Soil Desiccation Pilot Test Site*, Rev. 0, U.S. Department of Energy, Richland Operations Office, Richland, Washington.

EM 1110-1-4001, 2002, *Soil Vapor Extraction and Bioventing Engineering Manual*, U.S. Army Corps of Engineers, Washington, D.C. http://140.194.76.129/publications/eng-manuals/em1110-1-4001/toc.htm

EPA/240/B-06/001, 2006, *Guidance on Systematic Planning Using the Data Quality Objectives Process*, QA/G-4, U.S. Environmental Protection Agency, Environmental Protection Office of Environmental Information, Washington, D.C. http://www.epa.gov/quality/qs-docs/g4-final.pdf

GRP-EE-01-1.2, *Environmental Investigations Procedures*, CH2M Hill Plateau Remediation Company, Richland, Washington.

PNNL-12034, 2000, *Subsurface Transport Over Multiple Phases (STOMP)*, Rev. 0, Pacific Northwest National Laboratory, Richland, Washington.

PNNL-14115, 2003, *Hydrologic Characterization Using Vadose Zone Monitoring Tools: Status Report*, Rev. 0, Pacific Northwest National Laboratory, Richland, Washington. http://www.pnl.gov/main/publications/external/technical_reports/PNNL-14115.pdf

PNNL-14586, 2005, *Geologic Data Package for 2005 Integrated Disposal Facility Waste Performance Assessment*, Rev. 1, Pacific Northwest National Laboratory, Richland, Washington. http://www.pnl.gov/main/publications/external/technical_reports/PNNL-14568.pdf

PNNL-14907, 2004, *Vadose Zone Contaminant Fate and Transport Analysis for the 216-B-26 Trench*, Rev. 0, Pacific Northwest National Laboratory, Richland, Washington. http://www.pnl.gov/main/publications/external/technical_reports/PNNL-14907.pdf

PNNL-15237, 2005, *Geology of the Integrated Disposal Facility Trench*, Rev. 0, Pacific Northwest National Laboratory, Richland, Washington. http://www.pnl.gov/main/publications/external/technical_reports/PNNL-15237.pdf

PNNL-17274, 2008, *Experimental and Numerical Investigations of Soil Desiccation for Vadose Zone Remediation: Report for Fiscal Year 2007*, Rev. 0, Pacific Northwest National Laboratory, Richland, Washington. http://www.pnl.gov/main/publications/external/technical_reports/PNNL-17274.pdf

PNNL-17821, 2008, *Electrical Resistivity Correlation to Vadose Zone Sediment Pore-Water Composition for the BC Cribs and Trenches Area*, Decisional Draft, Pacific Northwest National Laboratory, Richland, Washington.

RHO-CD-673, 1979, 200 *Areas Waste Sites Handbook*, 3 vols., Rockwell Hanford Operations, Richland, Washington. http://www5.hanford.gov/arpir/?content=findpage&AKey=D196039027, http://www5.hanford.gov/arpir/?content=findpage&AKey=D196039028, http://www5.hanford.gov/arpir/?content=findpage&AKey=D196039029

SGW-34277, 2008, *Waste Control Plan for the BC Cribs and Trenches Area in the 200-BC-1 OU*, Rev. 1, Fluor Hanford, Inc, Richland, Washington.

SGW-38810, 2008, *Borehole Summary Report for the 216-B-26 and 216-B-58 Trenches*, Rev. 0, Fluor Hanford, Inc, Richland, Washington.

SW-846, 1997, *Test Methods for Evaluating Solid Waste: Physical/Chemical Methods*, 3P^{rdP} edition (as amended by Update I [July 1992], Update IIA [August, 1993], Update IIB [January 1995], and Update III), as amended, U.S. Environmental Protection Agency, Washington, D.C. www.epa.gov/SW-846/main.htm

SGW-41975, 2009, Independent Technical Review of the Deep Vadose Zone Treatability Test, Hanford Washington, CH2M Hill Plateau Remediation Company, Richland, Washington

WMP-27397, 2006, *Evaluation of Vadose Zone Treatment Technologies to Immobilize Technetium-99*, Rev. 1, Fluor Hanford, Inc, Richland, Washington

WMP-30426, 2006, *Performance Evaluation Report for Soil Vapor Extraction Operations at the Carbon Tetrachloride Site, Fiscal Year 2005*, Rev. 0, Fluor Hanford, Inc., Richland, Washington. http://www5.hanford.gov/arpir/?content=findpage&AKey=DA03801092

This page intentionally left blank.

This page intentionally left blank.