AUG 28 1998 22
Sta 37

ENGINEERING DATA TRANSMITTAL

0050602

Page 1 of 1

1. EDT 624546

2. To: (Receiving Organization) Distribution	3. From: (Originating Organization) Numatec Hanford Corporation Sludge Treatment Project	4. Related EDT No.: N/A
5. Proj./Prog./Dept./Div.: Spent Nuclear Fuels Project	6. Design Authority/ Design Agent/Cog. Engr.: A. G. Westra	7. Purchase Order No.: N/A
8. Originator Remarks: For approval and release.		9. Equip./Component No.: N/A
		10. System/Bldg./Facility: N/A
11. Receiver Remarks: 11A. Design Baseline Document? [] Yes [X] No		12. Major Assm. Dwg. No.: N/A
		13. Permit/Permit Application No.: N/A
		14. Required Response Date: N/A

15. DATA TRANSMITTED

(A) Item No.	(B) Document/Drawing No.	(C) Sheet No.	(D) Rev. No.	(E) Title or Description of Data Transmitted	(F) Approval Designator	(G) Reason for Transmittal	(H) Originator Disposition	(I) Receiver Disposition
1	HNF-2735		0	K Basin Sludge Treatment Process Description	N/A	1,2	1	

16. KEY

Approval Designator (F)	Reason for Transmittal (G)	Disposition (H) & (I)
E, S, Q, D or N/A (see WHC-CM-3-5, Sec.12.7)	1. Approval 2. Release 3. Information 4. Review 5. Post-Review 6. Dist. (Receipt Acknow. Required)	1. Approved 2. Approved w/comment 3. Disapproved w/comment 4. Reviewed no/comment 5. Reviewed w/comment 6. Receipt acknowledged

17. SIGNATURE/DISTRIBUTION
(See Approval Designator for required signatures)

(G) Reason	(H) Disp.	(J) Name	(K) Signature	(L) Date	(M) MSIN	(G) Reason	(H) Disp.	(J) Name	(K) Signature	(L) Date	(M) MSIN
		Design Authority				1	1	A. G. Westra	A.G. Westra	8/4/98	
		Design Agent				1	1	L. de Lamartinie	[illegible]	8/4/98	
1	1	Cog.Eng. T. A. Flament	[illegible]	8/4/98							
1	1	Cog. Mgr. W. W. Rutherford	[illegible]	8/4/98							
		QA									
		Safety									
		Env.									

18. A.G. Westra [signature] 8/4/98 Signature of EDT Originator Date	19. [signature] 8/4/98 Authorized Representative for Receiving Organization Date	20. [signature] W. W. Rutherford 8/4/98 Design Authority/ Cognizant Manager Date	21. DOE APPROVAL (if required) Ctrl. No. [] Approved [] Approved w/comments [] Disapproved w/comments

APR 1999 RECEIVED EDMC

BD-7400-172-1

K BASIN SLUDGE TREATMENT PROCESS DESCRIPTION

A. G. Westra, T. A. Flament, L. de Lamartinie
Numatec Hanford Corporation, Richland, WA 99352
U.S. Department of Energy Contract DE-AC06-96RL13200

EDT/ECN: 624546 UC: 2000
Org Code: 8C700 Charge Code: LD452 HAN62200
B&R Code: EW7040000 Total Pages: 166

Key Words: Sludge, K Basins, treatment, process description

Abstract: This document describes a process for chemically treating the sludge from the KE and KW Basins at Hanford so that the uranium, transuranic materials, and fission products can be sent to a double shell waste tank. The undissolved solids from the treatment process will be stabilized in grout for disposal at the Environmental Restoration Disposal Facility (ERDF). Appendices to this document include detailed flowsheet data for the sludge treatment process.

TRADEMARK DISCLAIMER. Reference herein to any specific commercial product, process, or service by trade name, trademark, manufacturer, or otherwise, does not necessarily constitute or imply its endorsement, recommendation, or favoring by the United States Government or any agency thereof or its contractors or subcontractors.

Printed in the United States of America. To obtain copies of this document, contact: Document Control Services, P.O. Box 950, Mailstop H6-08, Richland WA 99352, Phone (509) 372-2420; Fax (509) 376-4989.

AUG 28 1998
DATE:
STA: 37
HANFORD RELEASE
ID: 22

Christine Willingham 8-28-98
Release Approval Date

Release Stamp

Approved for Public Release

HNF-2735
Revision 0

K BASIN SLUDGE TREATMENT PROCESS DESCRIPTION

A. G. Westra (BWHC)
T. A. Flament (NHC)
L. de Lamartinie (NHC)

Numatec Hanford Corporation
Richland, Washington

Issued by

Numatec Hanford Corporation
for the

U.S. Department of Energy,
Richland Operations Office
Richland, Washington

This page intentionally left blank.

CONTENTS

1.0 INTRODUCTION 1-1

2.0 SLUDGE VOLUME AND COMPOSITION 2-1

3.0 SLUDGE TREATMENT REQUIREMENTS 3-1

3.1 REQUIREMENTS FOR TREATED SLUDGE TRANSFER TO TANK 241-AW-105 3-1
3.2 REQUIREMENTS FOR UNDISSOLVED SOLIDS DISPOSAL TO ENVIRONMENTAL RESTORATION DISPOSAL FACILITY 3-2
3.3 REQUIREMENTS FOR OFFGAS RELEASE 3-3

4.0 BATCH SIZE 4-1

5.0 SLUDGE TREATMENT PROCESS DESCRIPTION 5-1

5.1 LAG STORAGE 5-4
5.2 RESIN SEPARATION 5-5
5.3 SLUDGE DISSOLUTION 5-6
5.4 SOLIDS/LIQUID SEPARATION AND WASHING 5-14
5.5 SOLUTION ADJUSTMENT 5-16
5.6 NEUTRALIZATION/PRECIPITATION 5-18
5.7 LEACHING OF DISSOLVER RESIDUE FOR TRANSURANIC AND CESIUM REMOVAL 5-20
5.8 LEACHING OF RESIN BEADS FOR TRANSURANIC AND CESIUM REMOVAL 5-22
5.9 GROUTING OF RESIN BEADS AND UNDISSOLVED SOLIDS 5-24
5.10 OFFGAS TREATMENT 5-24
5.11 SLUDGE TREATMENT SUMMARY 5-29

6.0 REFERENCES 6-1

APPENDIX A A-1

APPENDIX B B-1

APPENDIX C C-1

APPENDIX D D-1

APPENDIX E E-1

APPENDIX F F-1

APPENDIX G G-1

LIST OF FIGURES

Figure 5-1 Flow Diagram of Sludge Treatment 5-2

LIST OF TABLES

Table 2-1 Nominal Inventory for KE Basin Process Feed Streams. 2-2

Table 2-2 Nominal Inventory for KW Basin Process Feed Streams. 2-3

Table 3-1 Requirements for Treated Sludge Transfer to Tank 241-AW-105 3-1

Table 3-2 Environmental Restoration Disposal Facility Waste Acceptance Criteria Radionuclide Concentration Limits. 3-3

Table 5-1 Dissolution Process Parameters. 5-8

Table 5-2 Adjustment Tank Parameters. 5-17

Table 5-3 Sludge Treatment Summary. 5-20

Table 5-4 Solid Leaching Process Parameters. 5-21

Table 5-5 Resin Leaching Process Parameters. 5-23

Table 5-6 Iodine-129 and Krypton-85 Content of 1 Metric Ton Uranium of N Reactor Fuel. 5-25

Table 5-7 Total Estimated Iodine-129 and Krypton-85 in K Basin Sludge. 5-26

Table 5-8 Sludge Treatment Summary. 5-30

LIST OF TERMS

BACT	best available control technology
BARCT	best available radioactive control technology
DOE	Washington Department of Health
Ecology	Washington State Department of Ecology
EDTA	ethylenediaminetetraacetic acid
ERDF	Environmental Restoration Disposal Facility
HEPA	high-efficiency particulate air
KE	K East
KW	K West
PCB	polychlorinated biphenyl
TOC	total organic carbon
TRU	transuranic
TSCA	*Toxic Substances Control Act of 1976*
TWRS	Tank Waste Remediation System
WIPP	Waste Isolation Pilot Plant

K BASIN SLUDGE TREATMENT PROCESS DESCRIPTION

1.0 INTRODUCTION

The K East (KE) and K West (KW) fuel storage basins at the 100 K Area of the Hanford Site contain sludge on the floor, in pits, and inside fuel storage canisters. The major sources of the sludge are corrosion of the fuel elements and steel structures in the basin, sand intrusion from outside the buildings, and degradation of the structural concrete that forms the basins. The decision has been made to dispose of this sludge separate from the fuel elements stored in the basins. The sludge will be treated so that it meets Tank Waste Remediation System (TWRS) acceptance criteria and can be sent to one of the double-shell waste tanks. The U.S. Department of Energy, Richland Operations Office accepted a recommendation by Fluor Daniel Hanford, Inc., to chemically treat the sludge. Sludge treatment will be done by dissolving the fuel constituents in nitric acid, separating the insoluble material, adding neutron absorbers for criticality safety, and reacting the solution with caustic to co-precipitate the uranium and plutonium. A truck will transport the resulting slurry to an underground storage tank (most likely tank 241-AW-105). The undissolved solids will be treated to reduce the transuranic (TRU) and ^{137}Cs content, stabilized in grout, and transferred to the Environmental Restoration Disposal Facility (ERDF) for disposal.

This document describes a process for dissolving the sludge to produce waste streams that meet the TWRS acceptance criteria for disposal to an underground waste tank and the ERDF acceptance criteria for disposal of solid waste. The process described is based on a series of engineering studies and laboratory tests outlined in the testing strategy document (Flament 1998).

This page intentionally left blank.

2.0 SLUDGE VOLUME AND COMPOSITION

The current best estimate is that there will be a total of 50.6 m^3 of as-settled sludge that must be processed (nominal value, Pearce et al. 1998). The sludge will be transferred from the storage basins as a slurry of 12 wt% solids in water. Based on this, the total volume of the feed to the sludge treatment process will be 260 m^3, including the water used to suspend and transfer the sludge.

There will be five distinct feed streams to the sludge treatment process--two from the KE Basin and three from the KW Basin. The five sludge feed streams are defined as follows:

- KE1--This stream consists of sludge retrieved from the various KE Basin pits and floor areas. This stream will also include KE Basin canister and fuel wash sludge particles less than or equal to 250 μm in diameter.

- KE2--This process stream consists of sludge less than 6.35 mm and greater than 250 μm in diameter collected from the KE Basin canister removal and fuel wash activities.

- KW1--This stream consists of the sludge retrieved from the various KW Basin pit and floor areas.

- KW2--This stream consists of sludge less than or equal to 6.35 mm and greater than 500 μm in diameter collected from the KW Basin canister removal and fuel wash activities.

- KW3--This stream consists of canister sludge less than or equal to 500 μm in diameter collected from the KW Basin Interim Water Treatment System knockout pot filter system.

Tables 2-1 and 2-2 show the volume and major chemical components of the five sludge feed streams.

The composition of the floor and pit sludges, which contains more iron oxides and sand than uranium, is much different than the canister sludges which are composed of mostly uranium oxides and uranium metal. The sludge treatment equipment will be designed to process all of the sludge streams, but some of the operating parameters will be adjusted as necessary to handle the different sludge stream compositions. The volume of chemical additions and the amount of undissolved solids will be much different for floor and pit sludges than for canister sludge.

Because the sludge will be transferred to the treatment process as five distinct streams with differing compositions, the sludge treatment process and equipment must be designed to handle each stream, rather than a composite stream, by itself.

Table 2-1. Nominal Inventory for KE Basin Process Feed Streams.

	Units	Stream KE1	Stream KE1 Composition in total kg		Stream KE2	Stream KE2 Composition in total kg		
As-settled Sludge **Solid Content** (g dry solids/cm3 as-settled sludge)	g/cm^3	0.564			1.655			
As-settled Sludge **Density**	g/cm^3	1.403			2.359			
Volume of Sludge	m^3	41.459			2.369			
As-settled Sludge Chemical Composition								
U	g/cm^3	0.001166	48.345		0.637703	1,510.603		
UO_2	g/cm^3	0.039209	1,625.558		0.384911	911.785		
U_3O_7	g/cm^3	0.028711	1,190.347		0.202970	480.799		
$UO_4 \cdot 4H_2O$	g/cm^3	0.000990	41.061		-	-		
UH_3	g/cm^3	0.001920	79.593		0.038189	90.463		
$Al(OH)_3$	g/cm^3	0.006358	263.589		0.143847	340.749		
Al_2O_3	g/cm^3	0.041651	1,726.804		-	-		
FeO(OH)	g/cm^3	0.192012	7,960.648		0.091262	216.182		
SiO_2	g/cm^3	0.154610	6,409.987		0.069935	165.664		
CaO	g/cm^3	0.006824	282.917		0.001348	3.193		
CO_2	g/cm^3	0.004996	207.140		0.006278	14.873		
C	g/cm^3	0.000655	27.163		0.001941	4.599		
Sum of Other Compounds	g/cm^3	0.037669	1,561.739		0.014023	33.218		
Miscellaneous solids								
PCB	g/cm^3	0.000108	4.465		0.000001	0.004		
OIER	g/cm^3	0.029395	1,218.692		0.014397	34.103		
Zeolite	g/cm^3	0.017818	738.740		-	-		
Zircalloy 2	g/cm^3	-	-		0.043569	103.207		
Grafoil	g/cm^3	-	-		-	-		
Dry solid - radionuclide content								
^{238}Pu and $^{239/240}Pu$	g/cm^3	0.000195	8.084		0.004316	10.225		
^{238}Pu and $^{239/240}Pu$	µCi/g	18.79			127.47			
^{241}Am	µCi/g	24.29			147.94			
^{137}Cs	µCi/g	302.79			1,374.21			
$^{89/90}Sr$	µCi/g	284.46			1,541.42			
Uranium composition								
U	kg		2614.96			2,819.18		
^{233}U	mass%	0.0000			0.0004			
^{234}U	mass%	0.0064			0.0081			
^{235}U	mass%	0.6361			0.6769			
^{236}U	mass%	0.0658			0.0718			
^{238}U	mass%	99.29			99.24			

Table 2-2. Nominal Inventory for KW Basin Process Feed Streams.

		Stream KW1			Stream KW2			Stream KW3	
	Units		Stream KW1 Composition in total kg			Stream KW2 Composition in total kg			Stream KW3 Composition in total kg
As-settled Sludge Solid Content (g dry solids/cm3 as-settled sludge)	g/cm^3	0.382			8.242			1.915	
As-settled Sludge Density	g/cm^3	1.292			8.549			2.582	
Volume of Sludge	m^3	4.67			0.199			1.878	
As-settled Sludge Chemical Composition									
U	g/cm^3	0.000187	0.871995		7.374676	1,464.425		0.035401	66.498
UO_2	g/cm^3	0.010487	48.975756		-	-		0.835274	1,569.000
U_3O_7	g/cm^3	0.010695	49.944728		-	-		0.368587	692.363
$UO_4 \cdot 4H_2O$	g/cm^3	0	0		-	-		0.004785	8.988
UH_3	g/cm^3	0	0		-	-		0.082877	155.678
$Al(OH)_3$	g/cm^3	0	0		-	-		0.215869	405.494
Al_2O_3	g/cm^3	0.020981	97.980113		-	-		-	-
FeO(OH)	g/cm^3	0.069370	323.957757		-	-		0.179110	336.445
SiO_2	g/cm^3	0.255239	1191.967215		-	-		0.059759	108.361
CaO	g/cm^3	0.004117	19.225854		-	-		0.000986	1.853
CO_2	g/cm^3	0.001190	5.557143		-	-		0.001557	2.924
C	g/cm^3	0.000194	0.908042		-	-		0.001570	2.949
Sum of Other Compounds	g/cm^3	0.009626	44.955227		0.042141	8.368		0.124142	237.084
Miscellaneous solids									
PCB	g/cm^3	0	0		-	-		0.000008	0.015
OIER	g/cm^3	0	0		-	-		-	-
Zeolite	g/cm^3	0	0		-	-		-	-
Zircalloy 2	g/cm^3	0	0		0.519739	103.207		-	-
Grafoil	g/cm^3	0	0		0.279611	55.524		-	-
Dry solid - radionuclide content									
^{238}Pu and $^{239/240}Pu$	g/cm^3	0.000068	0.318071		0.026116	5.186		0.004931	9.262
^{238}Pu and $^{239/240}Pu$	µCi/g	11.57			152.41			145.38	
^{241}Am	µCi/g	10.97			124.25			114.87	
^{137}Cs	µCi/g	96.62			4,881.41			1,637.75	
$^{89/90}Sr$	µCi/g	62.64			3,800.71			2,260.13	
Uranium composition									
U	kg		87.24			1464.42			2,207.77
^{233}U	mass%	-			-			-	
^{234}U	mass%	0.00668			0.00690			0.00584	
^{235}U	mass%	0.6794			0.78000			0.78828	
^{236}U	mass%	0.0726			0.09900			0.09250	
^{238}U	mass%	99.2424			99.11000			99.14212	

Tables 2-1 and 2-2 show that there are basically three very different types of sludges. The first is the KE Basin floor and pit sludges (stream KE1), which contain more insoluble material than uranium. The second type of sludge includes the canister and wash sludges from the KE and KW Basins (streams KE2, KW2, and KW3), which contain a high percentage of uranium and little iron or insoluble material. The third type of sludge is the KW Basin floor and pit sludge (stream KW1), which is mostly insoluble material.

As would be expected, the canister sludges, which contain much more uranium than the floor and pit sludges, also contain much more plutonium and long-lived fission products.

3.0 SLUDGE TREATMENT REQUIREMENTS

The dissolved sludge stream to be transferred to an underground waste tank and the undissolved solids to be sent to ERDF for disposal must meet the acceptance criteria for transfers to those facilities. In addition, the offgas released from the sludge treatment facility must comply with the regulatory requirements of the state of Washington. Polychlorinated biphenyls (PCB) have been found in KE Basin sludge samples at concentrations greater than 50 ppm, so sludge treatment also must comply with the *Toxic Substances Control Act of 1976* (TSCA). The following sections describe sludge treatment requirements.

3.1 REQUIREMENTS FOR TREATED SLUDGE TRANSFER TO TANK 241-AW-105

The TWRS requirements for the treated sludge are specified in the *K Basin Sludge Pretreatment Requirements Summary* (Carothers et al. 1997). Table 3-1 summarizes the requirements. Samples are required for each shipment so that tank farms personnel can evaluate the waste batch against approved waste stream profile sheets for K Basin treated sludge. Before, acceptance, the sludge is required to go through the TWRS waste acceptance criteria process.

Table 3-1. Requirements for Treated Sludge Transfer to Tank 241-AW-105. (2 sheets)

Requirements	How met
Criticality: • pH >8 • U^{235} content <0.84 wt% and iron/plutonium mass ratio >353 • Precipitate particle size <50 μm	Treatment process will add NaOH, depleted uranium, and iron to meet requirements. Caustic precipitation will form crystals <50 μm.
Particle size <177 μm.	Filter upstream from neutralization tank.
To prevent flammable gas retention, waste tank liquid specific gravity x total solids depth (in.) <148. A total of 379 m^3 of solids can be added to tank-241-AW-105 before exceeding this requirement.	Treatment process will generate <379 m^3 of precipitated solids.
No separable organic layer; exotherms/endotherms <1.0.	Samples indicate no separable organic or net exotherms.
For $[NO_3^-] \leq 1.0$ M then 0.010 M $\leq [OH^-] \leq 5.0$ M 0.011 M $\leq [NO_2^-] \leq 5.5$ M. For 1.0 M $< [NO_3^-] \leq 3.0$ M then $0.1 ([NO_3]) \leq [OH^-] < 10$ M, $[OH^-] + [NO_2^-] \geq 0.4 ([NO_3])$. For $[NO_3^-] > 3.0$ M then 0.3 M $\leq [OH^-] < 10$ M, $[OH^-] + [NO_2^-] \geq 1.2$ M, $[NO_3^-] \leq 5.5$ M.	Treatment process will add NaOH and $NaNO_2$ to meet requirements.
No TSCA[a]-regulated substances (PCB concentration in the liquid must be ≤ 0.5 ppb; PCB concentration in solids must contain <2 ppm/congener).	Treatment process will reduce PCB concentration below TSCA[a] treatment standards.
Eliminate pyrophoric materials.	Treatment process will remove or oxidize pyrophoric materials

Table 3-1. Requirements for Treated Sludge Transfer to Tank 241-AW-105. (2 sheets)

Requirements	How met
Supernate transuranic <100 nCi/g.	Treatment process will produce non-transuranic supernate.
Waste tank heat generation rate <70,000 Btu/h.	^{137}Cs and ^{90}Sr in sludge will add <10,000 Btu/h to the 1,203 Btu/h already in tank (Carothers et al. 1997[b]).
TOC <10 g/L if sent to noncomplexant tank.	Treatment process will remove organic ion-exchange resin.

[a]*Toxic Substances Control Act of 1976,* 15 USC 2601, et seq.
[b]Carothers, K. G., K. D. Fowler, and J. P. Sloughter, 1997, *K Basin Sludge Pretreatment Requirements Summary*, HNF-SD-TWR-OCD-001, prepared by Lockheed Martin Hanford Corporation for Fluor Daniel Hanford, Inc., Richland, Washington.

PCB = polychorinated biphenyl
TOC = total organic carbon

3.2 REQUIREMENTS FOR UNDISSOLVED SOLIDS DISPOSAL TO ENVIRONMENTAL RESTORATION DISPOSAL FACILITY

The requirements for waste disposal at ERDF are specified in the *Environmental Restoration Disposal Facility Waste Acceptance Criteria* (BHI 1998). The requirements from that document that are applicable to disposal of the undissolved solids from K Basin sludge processing are as follows.

- Before disposal at ERDF, waste containing free liquids must be treated so that free liquids are no longer present.
- Pyrophoric material contained in waste will be treated, prepared, and packaged to be nonflammable before being transported to ERDF for disposal.
- Solid acid waste that exhibits the characteristic of low pH under the corrosivity tests of WAC 173-303 will not be accepted for disposal.
- Transuranic waste (waste containing greater than 100 nCi/g of TRU) will not be accepted for disposal at ERDF.
- Ion-exchange resins must be thoroughly drained and stable before they are transported for disposal and shall not react with their surroundings to create excessive heat or corrosive-reactive products. Ion-exchange resins may be subject to restrictions associated with organic carbonaceous compounds.
- Non-liquid PCBs in the form of contaminated soil, rags, or other debris may be disposed of at ERDF (this includes non-liquid waste with PCB concentrations greater than 500 ppm).

The requirements for no free liquid and packaging of pyrophoric material will be met by grouting the solids before transfer to ERDF. The requirements for pH and non-TRU will be met by leaching and washing the solids before grouting. Table 3-2 lists the limits for radioactive constituents.

Table 3-2. Environmental Restoration Disposal Facility Waste Acceptance Criteria Radionuclide Concentration Limits.

Constituent	Limit (Ci/m^3)*
Americium-241	5.0E-02
Americium-243	5.7E-02
Carbon-14	5.3E+00
Carbon-14	5.3E+01
Cesium-137	3.2E+01
Europium-152	2.1E+07
Neptunium-237	1.5E-03
Plutonium-238	1.5E+00
Plutonium-239	2.9E-02
Plutonium-240	2.9E-02
Plutonium-241	6.2E+00
Plutonium-242	1.1-01
Radium-228	2.2E-04
Strontium-90	7.0E+03
Technetium-99	1.3E+00
Thorium-228 + daughters	1.2E-04
Thorium-232	6.0E-03
Uranium-233/234	7.4E-02
Uranium-235	2.7E-03
Uranium-238 + daughters	1.2E-02
Zirconium-93	1.4E+02

*Radioactive waste Class C limits also apply (10 CFR 61, "Licensing Requirements for Land Disposal of Radioactive Waste," *Code of Federal Regulations*, as amended.).

3.3 REQUIREMENTS FOR OFFGAS RELEASE

New sources of toxic air pollutants, which include NO_x, are regulated by WAC 173-460. The small-quantity emission limits for NO_x are 7727 kg/yr and 0.91 kg/h. If the NO_x releases will exceed these limits, a dispersion modeling analysis can be done to determine the concentration at the Hanford Site boundary. The concentration at the Site boundary must be less

than the Acceptable Source Impact Level from WAC 173-460, which for NO_x is 100 $\mu g/m^3$ averaged over 24 hours.

The use of best available control technology (BACT) to control toxic air emissions is also required by WAC 173-460. The use of absorption columns for NO_x removal is common industrial practice. Absorption columns for NO_x removal from the sludge treatment facility will be proposed to state regulators as toxics-best available control technology. The offgas section of this document provides details on how the absorption columns will reduce the NO_x concentration to less than the release limit.

Radioactive airborne emissions are regulated by WAC 246-247, which requires the use of best available radioactive control technology (BARCT). Radioactive air emissions from all combined operations at the Hanford Site cannot exceed 10 mrem/yr effective dose equivalent to an offsite individual. High-efficiency particulate air (HEPA) filters are commonly identified as BARCT for radioactive particulates. The HEPA filters will be installed in the offgas system of the sludge treatment facility.

The PCB concentration in the offgas released from the sludge treatment facility is limited to 10 $\mu g/m^3$ by U.S. Environmental Protection Agency regulations. A granulated activated carbon bed will be installed in the offgas system to reduce the PCB concentration below this limit.

The sludge treatment process described in this document will meet the above requirements for offgas emissions.

4.0 BATCH SIZE

The K Basin sludge will be transferred from the basins to the sludge processing facility in batches and will also be processed in batches. Many factors must be considered when selecting a batch size for the sludge treatment process. These factors include hazards classification, shielding requirements, criticality concerns, and processing rate. Another question that must be addressed is whether the batch size should be the same for the different sludge streams because the composition of floor/pit sludge is quite different from the composition of canister/wash sludge.

Several factors favor a smaller batch size for canister/wash sludge than for floor/pit sludge. The concentrations of uranium, plutonium, and ^{137}Cs are 4.5 to 5 times higher in canister/wash sludge than in the floor/pit sludge. Therefore, the source term for safety evaluations, the radiation dose rate, and the amount of absorber that must be added for tank farm criticality requirements will be much higher on a per liter basis for canister/wash sludge than for floor/pit sludge. This must be weighed against the simplicity of a common batch size for all sludge types.

The conclusion was reached that a common batch size should be used for all the sludge streams. The batch size that will be used for transfer and processing of the K Basin sludge is 160 kg of solids (dry basis) suspended in water at a concentration of 12 wt% solids. This will make a batch volume of approximately 1215 L. With a batch size of 160 kg of dry solids, it will take 214 batches to process all the sludge based on the sludge volumes reported in the design feed document for sludge (Pearce et al. 1998). Assuming a one batch/day processing rate and 60% operating efficiency, 214 batches can be processed in a 1-year period. This fits in with the commitment to complete sludge processing within a 1-year period following removal of the fuel from the KE and KW Basins.

A batch size of 160 kg of dry sludge will allow mass limits to be used for criticality control. One-third of a minimum critical mass of 1.25% enriched uranium is 204 kg, which is a factor of 1.27 times the 160 kg batch size. Even if the conservative assumption is used that a 160 kg batch is composed of 100% uranium, there will be a 44 kg margin between the batch size and an operating limit of 204 kg of uranium. Section 5.3.10 discusses mass limits for criticality control.

Because the neutralized waste will be hauled to the waste tank by truck using a shielded container, it is desirable to keep the batch size from getting too large. Using a sludge batch size of 160 kg, the volume of a batch of neutralized waste will range from about 6500 L to about 11,100 L depending on the sludge stream being processed. The neutralized waste batches of 6500 L can most likely be hauled in one truck load, but it is assumed that at the upper end of the range two truck loads per batch will be required.

An evaluation of the sludge inventory in the sludge processing facility will be done to determine the hazards category. Based on the 160 kg batch size, it is anticipated that it will be a hazards Category 2 facility.

This page intentionally left blank.

5.0 SLUDGE TREATMENT PROCESS DESCRIPTION

Figure 5-1 presents a flow diagram of the sludge treatment process. The sludge will be transferred from the basins to the treatment system in a shielded transport container. The sludge will be pumped from the transport container into the lag storage tank where it will be held until it can be moved on through the process. Sludge treatment will be done by dissolving the fuel constituents in nitric acid, separating the insoluble material, adding neutron absorbers for criticality safety, and reacting the solution with caustic to co-precipitate the uranium and plutonium. The resulting slurry will be transported to an underground storage tank (most likely tank 241-AW-105) in a shielded transport container.

Sludge treatment will include the following steps:

- Sludge transfer from transport container to lag storage vessel
- Resin bead separation
- Acid addition to the dissolver
- Sludge transfer from sludge buffer tank to dissolver
- Sludge dissolution
- Solution transfer from dissolver
- Solids/liquid separation
- Absorber addition (after sampling)
- Neutralization/precipitation
- Slurry transfer to tank farm.

The portion of the sludge that is not dissolved will go through the following steps:

- Solids/liquid separation
- Solids washing
- Chemical treatment of solids for ^{137}Cs and TRU removal
- Solids/liquid separation
- Solids washing
- Stabilization in grout.

The resin beads that are separated upstream from the dissolver will go through the following steps:

- Chemical leaching for ^{137}Cs and TRU removal
- Solids/liquid separation
- Solids washing
- Stabilization in grout along with undissolved solids from the dissolver.

Figure 5-1. Flow Diagram of Sludge Treatment. (2 sheets)

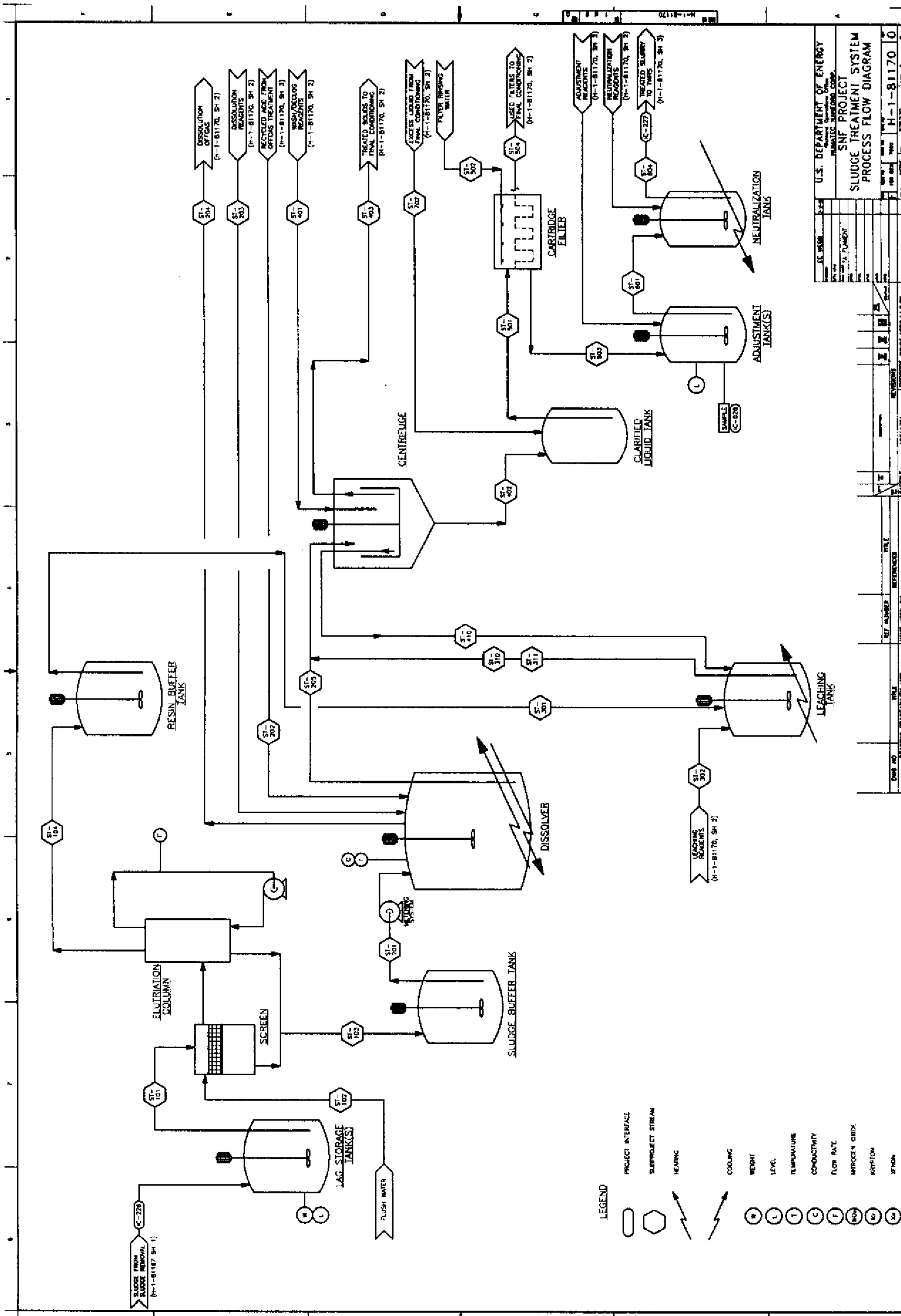

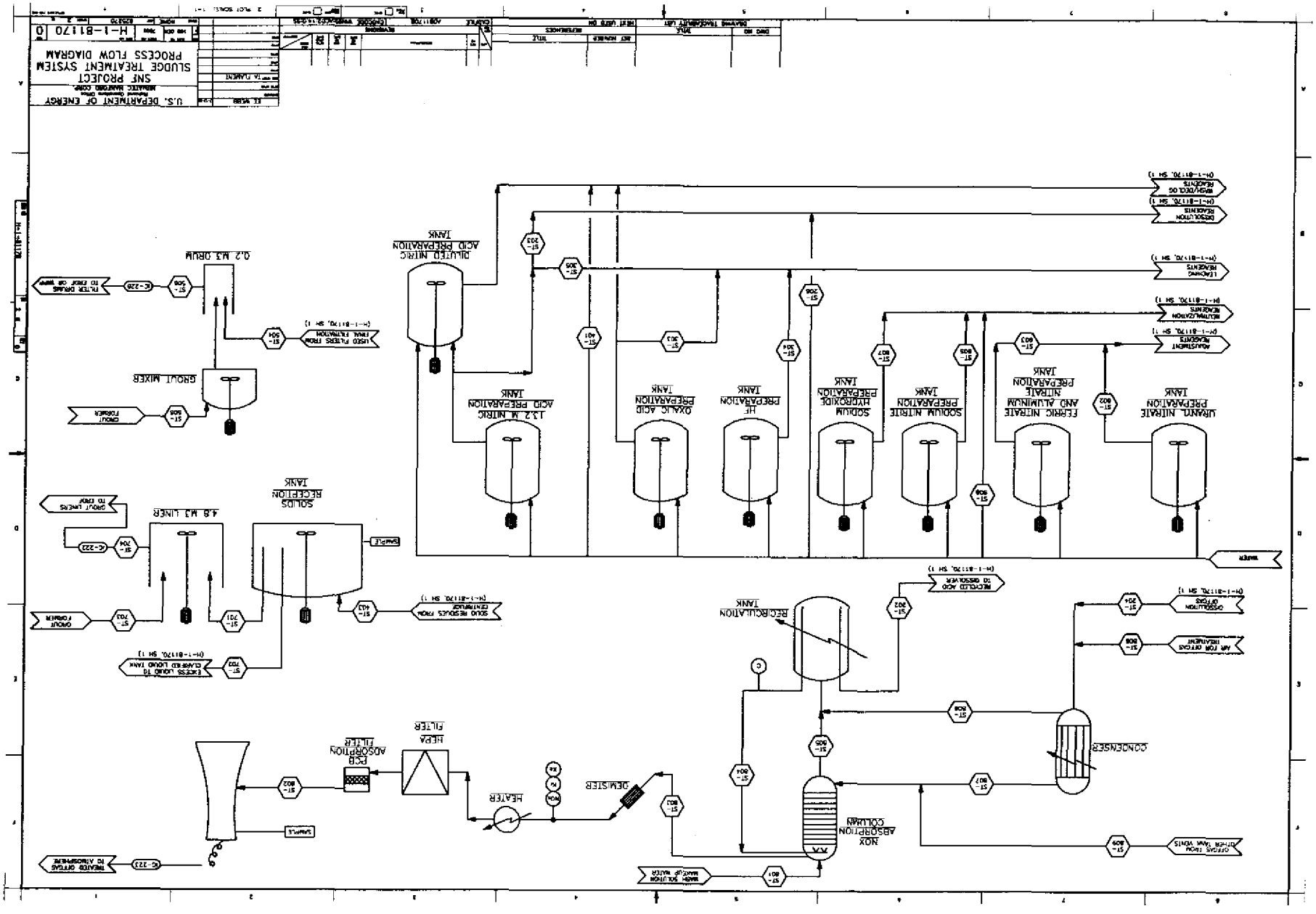

Figure 5-1. Flow Diagram of Sludge Treatment. (2 sheets)

The dissolver offgas system will consist of the following:

- Condenser
- NO_x absorber
- Mist eliminator
- Heater
- HEPA filters
- Activated carbon cartridge
- Sampling/monitoring system
- Release from stack.

The following sections describe each major step in the sludge treatment process along with limited information on stream compositions, stream volumes, and operating efficiencies of different unit operations. Appendixes A through G contain detailed material balance data for each of the five sludge streams, for solids grouting, and for the total of all streams. The data include summary material balance figures for each sludge stream and detailed stream data sheets for each sludge stream. The data are presented on a batch basis and a total stream basis.

5.1 LAG STORAGE

The sludge will be transported from the KE and KW Basins to the sludge treatment system as a slurry of 12 wt% solids in water. The sludge will be transferred from the transport container to a lag storage vessel. The lag storage vessel will serve as holding tank for the sludge until it can be transferred to the resin removal equipment and then on to the dissolver. The lag storage vessel will be equipped with an agitator to keep the sludge particles suspended.

More than one lag storage vessel may be needed to provide more processing flexibility. This would allow sludge to be transferred into one vessel while it is being transferred out of another. Increasing the amount of lag storage will decrease the coordination needed between sludge retrieval and sludge treatment. Problems with sludge retrieval and transport from the 100 K Basins will have less impact on the sludge processing facility if there are several lag storage tanks. The flexibility gained by additional lag storage tanks must be weighed against the increased cost of installing the tanks. This will be evaluated in a future time/cost study that will determine how much additional cost should be spent on equipment to reduce the cycle time and thus the total time to process all the K Basin sludge.

An air bleed will be used to dilute and sweep away hydrogen produced by the uranium-oxidation reaction. Hydrogen generation has been observed in several samples of sludge from KE Basin canisters (Makenas 1997). Movement or agitation of the sludge apparently disturbs the oxide layer on fuel fragments and exposes additional uranium metal to water which reacts as follows:

$$U + 2H_2O \rightarrow UO_2 + 2H_2$$

Some uranium hydride may also be present and will oxidize in water to form H_2 by the following reaction:

$$UH_3 + 2H_2O \rightarrow UO_2 + 3.5H_2$$

Gas samples were collected from the two sludge samples, which showed the highest gas generation rates. Analysis of the samples by mass spectrometry confirmed the presence of H_2.

5.2 RESIN SEPARATION

Laboratory tests have shown that when the mixed bed Purolite IX resin is exposed to simulated dissolver conditions, it does not dissolve or lose much of its functionality (Bredt et al. 1998, Poole et al. 1998a). If the resin is exposed to acidic dissolver conditions, it will become nitrated and the ^{137}Cs on the anion resin will be displaced by plutonium and americium. This will create two problems downstream from the dissolver: (1) the nitrated resin loaded with plutonium will become very reactive if dried, and (2) the plutonium and americium on the resin beads will make the TRU content in the undissolved solids so high that the plutonium will have to be leached from the resin to make the undissolved solids acceptable for disposal at ERDF. To alleviate these problems, the sludge will go through a resin separation step before dissolution.

The physical properties of the resin beads are different than the physical properties of the sludge particles in several ways. Two of the differences in physical properties (particle size and density) can be used to separate the resin from the sludge.

The diameter of the resin beads ranges from 200 to 1200 μm, which is larger than the particle size of most of the sludge particles. The particle size of KE Basin floor and weasel pit sludge varies from 0.1 μm to greater than 700 μm with the average particle size around 10 μm. About 10% of the sludge consists of particles greater than 700 μm. This includes particles of grafoil and uranium fragments up to 6 mm in diameter.

The density of the resin beads is less than the density of the main sludge components. The densities of Purolite resin beads are 1070 and 1240 kg/m^3 for the anion and cation beads, respectively. The densities of SiO_2 and Al_2O_3 are 2640 and 3970 kg/m^3, respectively. The iron oxide, uranium oxide, and uranium metal in the sludge have even higher densities.

Based on the above differences in physical properties, an engineering study (Duncan and Flament 1998) recommended using a screen followed by an elutriation column to separate the resin beads from the other sludge components.

The sludge will be transferred from the lag storage vessel through a screen to the sludge buffer tank. The screen will separate most particles larger than 300 μm from the rest of the sludge and will direct the larger particles including the resin beads to the elutriation column. The screen upstream will be back flushed with water periodically to prevent plugging. The flush solution will be routed to the elutriation column.

The resin beads and other large particles will enter the elutriation column around the midpoint. The resin beads will be elutriated from the other large particles by pumping water upward through the column at a velocity of about 4 cm/s. Because the resin beads have a lower density than most of the other sludge constituents, they will rise to the top of the column and exit with part of the water. The water and elutriated resin will drain to the resin buffer tank. Any paint chips and grafoil too large to pass through the screen upstream from the column inlet probably will be removed along with the resin beads because they are easily suspended.

Approximately 50% of the zeolite entering the elutriation column will be elutriated along with the resin beads. The other 50% will remain with the sludge stream that leaves the bottom of the column. Most of the water leaving the top of the column will be recirculated to the bottom of the column to elutriate more resin beads.

The heavier sludge particles and a small amount of the resin beads will settle to the bottom of the elutriation column and drain from there to the sludge buffer tank.

Periodically, the resin beads will be transferred from the resin buffer tank to the leach tank where they will be treated to remove ^{137}Cs and TRU.

Elutriation of resin beads by the technique described above has been demonstrated in the laboratory (Squier 1998). A resin separation efficiency of 95% was achieved. However, 0.2 wt% of the sludge was entrained along with the resin beads in the elutriation column.

5.3 SLUDGE DISSOLUTION

Analysis of sludge samples from the basins has identified numerous oxides of uranium, but only one sample contained uranium hydride. Fragments of uranium metal are believed to be present in the sludge although it was not identified in any samples. Oxide coatings on the uranium metal may be preventing its detection by X-ray diffraction. The high density of some canister sludge samples is consistent with the presence of uranium metal. The sludge that comes from the fuel element washing machine is assumed to contain 50 wt% uranium metal as well as 5 wt% UH_3.

5.3.1 Uranium Dissolution

The uranium oxide, uranium hydride, and uranium metal will dissolve in nitric acid to form uranyl nitrate, water, and nitrogen oxides. Because the uranium oxide, hydride, and metal in the sludge have a high surface area, most of it will dissolve rapidly at boiling temperature even at a nitric acid concentration less than 4 M. Uranium metal fragments with a diameter up to 6 mm may be present and will take the longest to dissolve. Several different reactions will be involved in the dissolution of the different forms of uranium and a discussion of them is beyond the scope of this document. Only an overall reaction that is representative of the uranium dissolution stoichiometry including reflux from the condenser will be presented.

The nitric acid consumed during dissolution of the various uranium oxides, uranium hydride, and fragments of uranium metal depends on how far the HNO_3 is reduced during

dissolution and how much NO_x is absorbed in the condenser and absorber and returned to the dissolver. Until the process is further defined, the following overall equations will be used to represent the uranium dissolution in the dissolver:

$$U + 3.8HNO_3 + 0.15O_2 \rightarrow UO_2(NO_3)_2 + 1.9H_2O + 1.8\ NO$$

$$UO_2 + 3.8HNO_3 + 0.05O_2 \rightarrow UO_2(NO_3)_2 + 1.9H_2O + 1.8\ NO_2$$

$$U_3O_7 + 8HNO_3 \rightarrow 3UO_2(NO_3)_2 + NO + NO_2 + 4H_2O$$

$$UH_3 + 5HNO_3 \rightarrow UO_2(NO_3)_2 + 3NO + 4H_2O$$

$$UO_4 \bullet 4H_2O + 2HNO_3 \rightarrow UO_2(NO_3)_2 + 5H_2O + 0.5\ O_2$$

The first two equations were used for the Plutonium-Uranium Extraction flowsheet (Allen 1985) and account for HNO_3 reflux from a downdraft condenser.

Hot cell tests with sludge samples show that greater than 99% of the uranium, plutonium, americium, and fission products (mostly ^{137}Cs and ^{90}Sr) in the floor sludge will dissolve in 6 M HNO_3 (Carlson et al. 1998a, Carlson et al. 1998b). The remaining uranium, plutonium, americium, and fission products will remain tied up with the undissolved portion of the sludge. The traces of plutonium and americium that remain tied up in the undissolved solids will make it difficult to make the solids non-TRU (greater than 100 nCi/g) without further processing downstream. The undissolved solids also will contain traces of ^{137}Cs and ^{90}Sr. The residual ^{137}Cs may also exceed ERDF acceptance criteria without further processing. Leaching of the undissolved solids to reduce the TRU and ^{137}Cs content will be discussed in a later section.

Table 5-1 shows the percentage of uranium and other sludge components expected to dissolve in 6 M HNO_3 based on laboratory tests.

5.3.2 Iron Dissolution

Ferric oxyhydroxide present in the sludge will react with nitric acid according to the following equation:

$$FeOOH + 3HNO_3 \rightarrow Fe\ (NO_3)_3 + 2H_2O$$

Hot cell dissolution tests of sludge samples indicate that greater than 99% of the FeOOH is dissolved after boiling for 24 hours in 6 M HNO_3 (Carlson et al. 1998a, Carlson et al. 1998b).

Table 5-1. Dissolution Process Parameters.

	Dissolution factor	Vaporization factor	Plating factor	Undissolved	Absorbed by resin after dissolution
Al(OH)3	99.00%			1.00%	
Al2O3	95.00%			5.00%	
FeOOH	99.00%			1.00%	
C	0.00%			100.00%	
CaO	90.00%			10.00%	
CO2	0.00%	100.00%			
SiO2	0.00%			100.00%	
Miscellaneou	99.00%			1.00%	
Zircaloy	0.00%			100.00%	
Grafoil	0.00%			100.00%	
Na2U2O7	0.00%			100.00%	
U	99.95%			0.05%	
U3O7	99.95%			0.05%	
UH3	99.95%			0.05%	
UO2	99.95%			0.05%	
UO4-4H2O	99.95%			0.05%	
PCB	Dissolution rate in order to get 12 ppb concentration in dissolution solution	20.00% of remaining PCB	50.00% of of remaining PCB	30.00% of of remaining PCB	
Zeolite				100.00%	
OIER				100.00%	
Pu (Solid)	99.70% (minus what is absorbed by resins)			0.30%	According to equilibrium law : Kd=32 (with Kd=Pu concentration of wet resin/Pu concentration in liq)
Am (Solid)	99.90% (minus what is absorbed by resins)			0.10%	According to equilibrium law : Kd=1.9 (with Kd=Am concentration of wet resin/Am concentration in liq)
Cs (Solid)	99.70%			0.30%	
Sr (Solid)	99.95%				
Pu (Resin)					100.00%
Am (Resin)					100.00%
Cs (Resin)	90.00%				10.00%

5.3.3 Aluminum Dissolution

Aluminum hydroxide ($Al[OH]_3$) was found only in KW Basin canister sludge samples. The canister sludge samples averaged less than 1 wt% aluminum, while the KE Basin floor sludge contained 4 wt% aluminum. Most of the aluminum in the floor sludge is in the form of alumina compounds, while the aluminum in the canister sludge is $Al(OH)_3$. The $Al(OH)_3$ and alumina will dissolve as follows:

$$Al(OH)_3 + 3HNO_3 \rightarrow Al(NO_3)_3 + 3H_2O$$

$$Al_2O_3 + 6HNO_3 \rightarrow 2Al(NO_3)_3 + 3H_2O$$

Hot cell tests with sludge samples indicate that 90% to 95% of the $Al(OH)_3$ and Al_2O_3 is dissolved after boiling for 24 hours in 6 M HNO_3 (Carlson et al. 1998a, Carlson et al. 1998b).

5.3.4 Silica Precipitation

Silica (SiO_2) was identified as a component in floor and canister sludges and several aluminum silicate compounds ($NaAlSi_3O_8$, $CaAl_2Si_2O_8 4H_2O$) were found in KE Basin floor sludge samples.

A gelatinous precipitate that was observed during some sludge dissolution tests has not been identified, but is believed to be a silicon compound formed by the precipitation of some of the SiO_2 that dissolved. Hot cell dissolution tests of sludge samples indicate that there is very limited dissolution of SiO_2 in boiling 6 M HNO_3 so essentially all of the SiO_2 will leave the dissolver with the undissolved solids.

The SiO_2 present in the sludge from sand intrusion and spalling of the basin concrete will constitute most of the undissolved solids.

The sand also contains aluminum and silicates in the form of clays and these are partially soluble in nitric acid. A gelatinous precipitate has been observed in hot cell dissolution tests of K Basin canister sludge in 10 M HNO_3 at 60 and 95 °C (Bredt et al. 1998). The amount of precipitate formed increases with temperature and acid concentration. A similar precipitate formed when Hanford Site blow sand from the 100 K Area was exposed to 10 M HNO_3. A silica precipitate also formed when samples of concrete from the 100 K Basins were boiled in HNO_3 (Beck 1998).

The main concern with gel formation is that it may prevent efficient separation and washing of the undissolved solids downstream from the dissolver. Efficient separation and washing of the solids are a critical part of making the solids non-TRU and reducing the PCB concentration in the dissolved sludge to less than 0.5 ppb. These criteria must be met to send the solids to ERDF for disposal and to transfer the dissolved sludge to tank 241-AW-105.

Manipulating process conditions to ensure that the silica precipitates in a form that can be filtered rather than forming a gel is the key to processing materials that contain soluble silicates.

One way to help form a filterable precipitate is to use a strong acid at or near its boiling point (Terry 1983).

Laboratory studies were done to determine the cause of gel formation and what could be done to prevent gel formation or minimize its impact on sludge processing (Beck 1998). The tests showed that when concrete similar to that used in the K Basins was exposed to hot nitric acid, gel formed at all nitric acid concentrations between 1 and 10 M. However, the gel that formed when using low acid concentrations (1 to 4 M) caused filtration problems, while the gel that formed using high acid concentrations (8 to 10 M) could be filtered. Other materials that were tested for gel formation (Hanford Site sand and diatomaceous earth) failed to form gel under simulated dissolver conditions.

5.3.5 Zeolite Dissolution

The Zeolon 900H zeolite and the metallic zirconium fragments will remain with the undissolved solids. Laboratory tests by the Pacific Northwest National Laboratory indicate that 92% to 95% of the ^{137}Cs will be removed from the Zeolon 900H ion-exchange material when digested in HNO_3 (Poole et al. 1998b). The Zeolon 900H lost some of the aluminum and iron present in the material but the basic mordenite structure remained intact. Calculations indicate that at the above removal rate, the residual ^{137}Cs on the zeolite will not by itself cause the undissolved solids to exceed the ERDF acceptance criteria.

5.3.6 Polychlorinated Biphenyl Distribution

Laboratory tests were performed to determine the fate of the PCBs during nitric acid dissolution (Mong et al. 1998). The laboratory tests used a discrete mixture of chlorinated biphenyls (dichloro, tetrachloro, hexachloro, and octachloro) so decomposition of the PCB could be detected by a change in the ratio. The results of the tests indicate that the PCBs will not decompose in boiling nitric acid. This was expected because PCBs are very stable compounds. Because PCBs are hydrophobic, most of the PCBs that are not carried into the offgas will be adsorbed on the residual undissolved solids or on equipment. The expected distribution of the PCBs during sludge processing was calculated using only the tetrachloro and hexachloro compounds because they are most representative of the Aroclor 1254 PCB found in the basin sludge. The laboratory tests found that 20% of the tetrachloro and hexachloro biphenyls were volatized into the offgas, 50% plated out on the laboratory glassware used to conduct the test, and 30% were adsorbed on the solids. The above PCB distribution was used for flowsheet calculations.

The solution leaving the dissolver may contain up to 12 ppb PCBs (solubility limit in water). Later sections of this document will discuss steps that will be taken to reduce the PCB concentration in the offgas and downstream from the dissolver. The total amount of PCBs in the sludge is estimated to be about 4.5 kg (Pearce et al. 1998). The total amount of PCBs that is expected to plate out on process equipment is 50% of this or 2.25 kg. The PCBs plated out on the equipment will be disposed of following the campaign during decontamination and deactivation of the facility.

5.3.7 Dissolution Process

This section describes the current process envisioned for dissolving the sludge based on operating experience dissolving uranium oxide fines and discusses the results of ongoing laboratory experiments.

The finely divided uranium oxide in the floor/pit and settler tank sludges will react very rapidly in boiling nitric acid even at low concentrations. An engineering study of sludge dissolution (Westra and Flament 1998) concluded that the best way to control the reaction rate when dissolving this sludge is to first make up an acid solution in the dissolver and then slowly add the sludge continuously over a period of 8 hours. This will limit the amount of finely divided uranium that is available to react at any given time. The floor/pit sludge with an average particle size of 10 μm will dissolve continuously as it is added to 2 to 6 M HNO_3 at 100 °C. Calculations show that a minimum acid concentration of 4.2 M is needed to continuously dissolve the 500 μm particles in the KW Basin settler tank sludge (Nevers and Flament 1998). If the reaction rate is controlled by the sludge feed rate to the dissolver, dilute acid is not needed for reaction control.

The 6 mm diameter particles of uranium metal that will be present in the canister/wash sludge will dissolve much slower than the finely divided uranium oxides in the floor/pit and settler tank sludge. The time required to completely dissolve the 6 mm particles in HNO_3 at 103 °C was calculated to be 71 hours in 3 M HNO_3, 19 hours in 5 M HNO_3, and 12 hours in 6 M HNO_3 (Westra and Flament 1998, Nevers and Flament 1998). Using an acid concentration of 6 M at close to boiling temperature for dissolving canister/wash sludge will result in a total dissolution time of approximately 20 hours (8 hours to continuously feed the sludge to the dissolver and another 12 hours to dissolve the 6 mm uranium particles in the last sludge fed to the dissolver).

Based on the above discussion, all of the sludge streams should be dissolved by continuously feeding the sludge into 6 M HNO_3 at 95 °C. It will take longer to dissolve the canister/wash sludge than the other sludge streams due to the larger particle size, but otherwise the process will be the same for all sludge streams.

The following paragraphs describe the process that will be used for dissolving the K Basin sludges.

A batch of 600 L of 6 M nitric acid solution will be made up in the dissolver. The acid will be agitated and heated to 95 °C. Then the sludge, with the resin beads removed, will be pumped into the dissolver continuously at a rate of 2.5 L/min (20 kg solids/h). Air will be bled into the dissolver vapor space to help oxidize NO to NO_2, which will improve NO_2 absorption in the condenser and absorber. The dissolver temperature and vacuum, along with the NO_x concentration in the offgas, will be monitored to ensure that the reaction is under control. The concentration of xenon and ^{85}Kr in the offgas will be monitored to track uranium metal dissolution. The acid concentration will be monitored using a conductivity probe. Additional acid will be added continuously to maintain the acid concentration at 6 M. At a feed rate of 2.5 L/min, it will take 8 hours to transfer the approximately 1215 L batch of sludge into the dissolver.

When dissolving floor/pit and settler tank sludge, the dissolver will be held at 95 °C for 2 hours after sludge addition is completed to ensure that all of the uranium is dissolved. The dissolver will be held at 95 °C for a total time of approximately 10 hours.

When dissolving canister/wash sludge, the dissolver will be held at 95 °C for 14 hours after the sludge addition is completed to dissolve the 6 mm particles of uranium metal that may be present in the sludge. The ^{85}Kr and xenon concentration in the offgas will be monitored along with the solution conductivity to determine the dissolution endpoint. When the ^{85}Kr and xenon concentration drops to zero and the solution conductivity levels off, it will be an indication that essentially all of the uranium metal has dissolved. The total time that the dissolver will be held at 95 °C for a batch of canister/wash sludge will be approximately 22 hours.

When sludge dissolution is complete, the dissolver will be cooled to 45 °C and the solution will be transferred out of the dissolver to a centrifuge for solids/liquid separation. The dissolver solution will be agitated during the transfer to keep the undissolved solids suspended so that they are transferred out of the dissolver along with the solution. Following transfer of the solution out of the dissolver, the dissolver will be rinsed with 380 L of water, which will then be transferred out through the centrifuge.

5.3.8 Dissolver Equipment Description

A dissolver vessel with a capacity of 3785 L and a diameter of 120 cm is recommended for dissolving the sludge as described in the previous section. With this configuration, the initial 6 M acid makeup in the dissolver will come to a depth of 51 cm. This is adequate to cover the blades of a mechanical agitator. The final solution volume in the dissolver will be approximately 2250 L, which will come to a solution depth of approximately 190 cm. This would leave a 134 cm headspace in a 120 cm diameter, 3785 L tank.

The dissolver will have a mechanical agitator and internal cooling coils. A steam or hot water jacket, or external electrical heaters, will most likely heat the dissolver. An elevated drown tank will be connected to the dissolver so that water can be quickly added to quench the reaction if necessary. Quench water will only be added if the dissolver solution temperature and/or vacuum indicate the reaction rate is excessive.

The dissolver must be fabricated of a material that has good resistance to boiling 6 M HNO_3. An acceptable material of construction is 304 L stainless steel. Other materials may also be acceptable.

A critical component of the sludge dissolution system as described above is the sludge feed system. The feed system must be capable of feeding the sludge into the dissolver at a slow, controlled rate without allowing the suspended solids to settle out in the transfer lines. This may be done by recirculating the sludge from the sludge buffer tank through a small head tank located directly above the dissolver. The recirculation rate will be high enough to keep all the solids suspended. The sludge will then be fed from the head tank down a short vertical line into the dissolver.

5.3.9 Dissolver Instrumentation and Control

The following instrumentation will be used to monitor and control the dissolver. This list should be considered the minimum required:

- Solution conductivity to monitor the acid concentration
- Solution temperature
- Liquid level
- Specific gravity
- Dissolver vacuum control system
- Sludge addition flow rate and control system
- Acid addition flow rate and control system
- NO_x concentration in the offgas
- H_2 concentration in the offgas
- ^{85}Kr concentration in the offgas
- Xenon concentration in the offgas
- Gamma monitor to detect fissile material heel left in the bottom of the dissolver
- Cooling water flow rate
- Heater controls.

The vacuum control system will consist of an automatic control loop that will adjust a flow control valve in the offgas system as necessary to control the dissolver vacuum at the set point.

The principal method used to ensure that the reaction remains under control is the slow, continuous sludge feed to the dissolver. This limits the amount of finely divided uranium that can be in the dissolver at any time because the small particles will dissolve very quickly in 6 M HNO_3. The dissolver operating temperature will be 95 °C, which is close to the optimum temperature for dissolving uranium. Any increase in temperature will cause little, if any, increase in reaction rate.

The following paragraph describes the dissolver reaction control scheme as envisioned at this time.

The dissolver temperature and vacuum, as well as the NO_x concentration in the offgas, will be closely monitored to ensure that the reaction remains under control. If the temperature increases to 100 °C, sludge addition and HNO_3 addition will be stopped and the cooling water flow will be increased. The sludge addition control system will be interlocked to the temperature instrument to automatically stop sludge addition at 105 °C, if it has not been done manually. If the temperature and NO_x concentration continue to increase after the sludge feed is stopped and the cooling water increased, water will be added from a drown tank to quench the reaction.

5.3.10 Dissolver Criticality Safety

A soluble nuclear poison and fissile material mass limits on the lag storage vessel and dissolver will be used to ensure criticality safety. The soluble nuclear poison will be added to the lag storage vessel before transferring a batch of sludge into the vessel.

For mass control, the amount of fissile material transferred into the lag storage vessel will be measured using either a fissile material detector, or a combination of load cells and level instrumentation. A fissile material detector is the preferred method, but if it is not feasible or cost effective to fabricate a fissile material detector, the combination of load cells and level instrument will be used.

The minimum critical masses for 1.0% and 1.25% enriched uranium with no burnup are 2000 and 612 kg, respectively (Kessler 1998). The KW Basin has stored 1.25% enriched fuel so the 612 kg minimum critical mass would apply to KW Basin sludge. Assuming that the lag storage vessel and dissolver mass limit is set at one-third of the minimum critical mass, the uranium mass limit would be 204 kg for sludge from the KW Basin. This is a factor of 1.27 times the total mass of dry sludge in a 160 kg dissolver batch.

The uncertainty associated with the fissile material in the dissolver heel will have to be included in the mass limit. The uncertainty will increase with each subsequent batch of sludge processed through the dissolver without verifying the size of the heel. A gamma monitor and periodic inspections will be used to ensure that there is not a heel buildup.

5.4 SOLIDS/LIQUID SEPARATION AND WASHING

The undissolved solids must be removed from the dissolver product stream to meet the waste tank acceptance criteria. The PCB concentration limits are the most restrictive limits in the acceptance criteria as far as solids separation is concerned. The concentration limit for PCBs is 0.5 ppb in the liquid and 2 ppm in solids. Because PCBs are hydrophobic, most of the PCBs will be associated with the solids. Therefore, a very good solids/liquid separation must be achieved to ensure that the PCB concentration in the stream sent to the waste tank will be below the limits.

The ERDF waste acceptance criteria require that the waste be non-TRU (less than 100 nCi/g of TRU) with the ^{137}Cs concentration less than 32 Ci/m^3. To meet these criteria, the interstitial liquid containing TRU and ^{137}Cs dissolved in acid must be thoroughly washed from the solids. This will be done as part of the solids/liquid separation process.

Most of the undissolved solids will come from the dissolution of floor sludges (streams KE1 and KW1). Laboratory studies by Pacific Northwest National Laboratory (Carlson et al. 1998a) indicate that 7 to 16 wt% of the floor sludge will remain undissolved at the end of each sludge dissolution step. The undissolved solids will be about 91% SiO_2 with the rest being mostly Al_2O_3, FeOOH, carbon, and miscellaneous material. The particle size of the undissolved solids will be in the 0.1 to 200 μm range with more than 96 vol% of the particles greater than 5 μm in diameter.

Technologies for separating the solids from the dissolver product and leachate streams were evaluated to determine whether a centrifuge, filters, settling, or a combination of those methods should be used (Duncan and Zimmer 1998). Separation of the solids by settling was eliminated as an option due to the extended time that would be required for the small particles in the undissolved solids to settle. After reviewing various filter and centrifuge designs, it was concluded that the best way to separate the solids was to use a sedimentation centrifuge followed by a polishing filter.

A Robatel DPC 900 centrifuge can be expected to achieve at least 95% solids removal efficiency in this application and was recommended for the first step in solids separation. This centrifuge has a proven record in nuclear service at the La Hague and Sellafield reprocessing plants.

The Robatel DPC 900 centrifuge is a solid bowl centrifuge equipped with a high-pressure spray to remove the solids from the sides of the bowl. A vertical shaft running through the center of the bowl rotates the bowl. As dissolver product or leachate is fed into the centrifuge bowl, the solids and the liquid are forced against the inside wall of the bowl by centrifugal force. The solids are retained below baffles on the sides of the bowl. The clarified liquid overflows the baffles and the top of the bowl and drains to the clarified liquid tank. This type of centrifuge can be used to wash the solids after they are separated from the liquid. The solids are cut from the side of the bowl by a high-pressure spray while the centrifuge is rotated at low speed. The spray also washes the solids by diluting the interstitial liquid. The centrifuge then returns to high speed to separate the solids from the wash solution. Up to 18 kg of solids (dry basis) can accumulate in the centrifuge bowl before it needs to be cleaned out.

A polishing filter will be required downstream of the centrifuge to remove the small (0.1 to 5 μm) particles that pass through the centrifuge. This will be less than 5% of the particles in the stream before centrifugation. A cartridge filter with polyethylene filter elements was recommended for the polishing filter. The 3 M cartridge filter evaluated for this application has a solids removal efficiency of 99%. The filter elements will be made of polyethylene so they will also serve as a PCB adsorber because PCBs are hydrophobic. In laboratory studies by Pacific Northwest National Laboratory, more than 90% of the PCBs in the liquid phase were removed by filtration through a polyvinylidene fluoride filter (Mong et al. 1998). The efficiency of the polyethylene filter in removing PCBs is expected to be similar to the efficiency of the polyvinylidene fluoride filter used in the laboratory test.

The combined solids removal efficiency of the centrifuge and polishing filter will be greater than 99.5%.

The solids separation and washing will be done as follows. The dissolver product with suspended solids will be transferred from the dissolver to the centrifuge. The clarified liquid will overflow the centrifuge bowl and drain to the clarified liquid tank. From there, it will be transferred through the cartridge filter to the adjustment tank.

The pressure drop across the filter will be monitored and the filter elements will be changed out when the pressure drop approaches the design limit, or when the flow rate through the filter decreases to the point that it is slowing down sludge processing. Calculations indicate that about 49 filter cartridges will be used to process all the sludge (Pearce 1998). Of these, 46

are expected to be non-TRU and will be sent to ERDF for disposal. One of the filter cartridges is expected to exceed the TRU threshold of 100 nCi/g, but have a PCB concentration below the treatment standard in the TSCA. This filter will be stored as TRU waste for disposal at the Waste Isolation Pilot Plant (WIPP). There is currently no disposal path for the two filter cartridges that are expected to be both TRU and TSCA regulated for PCBs. These will be stored until a disposal path is identified. The used filter cartridges that will be sent to ERDF will be grouted in 208 L drums. One drum will be needed for each filter cartridge.

The solids that are removed by the centrifuge will be washed once with dilute nitric acid or water before being transferred out of the centrifuge to the leaching tank where additional TRU and fission products will be leached from the solids. Section 5.7 describes the solids leaching process.

5.5 SOLUTION ADJUSTMENT

After the dissolver product solution has been transferred through the cartridge filter into the adjustment tank, depleted uranium and iron will be added to the solution as neutron absorbers. The addition of neutron absorbers is needed to meet TWRS requirements for criticality control in tank 241-AW-105. Depleted uranium and iron will be added as absorbers for the ^{235}U and ^{239}Pu, respectively. Both absorbers will be added because laboratory studies have shown that after co-precipitation of plutonium and uranium under simulated waste tank conditions, plutonium can selectively dissolve if it is exposed to carbonate or ethylenediaminetetraacetic acid (EDTA) (Krot et al. 1998). Carbonate and EDTA are both present in the Hanford Site waste tanks.

Depleted uranium is the best absorber for ^{235}U because ^{235}U and ^{238}U cannot be separated chemically. Iron has been used for many years as an absorber in plutonium-bearing waste sent from the Plutonium Finishing Plant to underground waste tanks. Other metals could be used as well as iron for a plutonium absorber, but iron is already present in the waste tanks and its use as a plutonium absorber is addressed in the TWRS authorization basis. Iron dissolved from KE Basin floor sludge will supply most of the iron that is required for a plutonium absorber when processing that sludge stream.

Before addition of the absorbers, the solution in the adjustment tank will be agitated for at least 0.5 hours and then sampled. The samples will be analyzed for $^{239/240}Pu$, uranium isotopic, ^{137}Cs, ^{90}Sr, H^+, iron, aluminum, calcium, total organic carbon, PCBs, and other things as required by TWRS acceptance criteria. The results of the $^{239/240}Pu$, uranium isotopic, and iron analyses, along with the volume in the tank, will be used to determine how much depleted uranium and iron will need to be added as absorbers. The results of the $^{239/240}Pu$ and uranium isotopic analyses also will be used for fissile material accountability. Approximately 2 days may be needed for the laboratory to complete the $^{239/240}Pu$ analysis depending on the analytical technique used. The facility will install two or three adjustment tanks, if required, to prevent analytical turnaround time from delaying processing.

Depleted uranium (0.3 wt% ^{235}U) will be added as necessary to lower the enrichment to less than 0.84 wt% ^{235}U as required by TWRS (Carothers et al. 1997). Characterization samples

of the basin sludge have shown that the average uranium enrichment is below 0.84 wt% ^{235}U (Pearce et al. 1998), but individual samples had uranium enrichments as high as 1.25 wt% ^{235}U.

Iron will be added as necessary to obtain an iron to plutonium weight ratio of 353:1. Characterization samples have shown that the average iron to plutonium weight ratio in the KE Basin floor sludge is 740:1 (Pearce et al. 1998). However, the sludge will not be processed as a homogeneous mixture so iron will need to be added to some batches.

The depleted uranium will be added as a concentrated uranyl nitrate solution and the iron will be added as ferric nitrate solution. The absorber solutions will be made up in the uranyl nitrate makeup tank and ferric nitrate makeup tanks, respectively. It is doubtful that depleted uranyl nitrate solution is available, so it is assumed that depleted UO_3 powder will be dissolved in nitric acid to make up the uranyl nitrate solution. The solution in the adjustment tank will be at a temperature of approximately 40 °C when the absorbers are added. The solution will be agitated during absorber addition and for at least 0.5 hours afterwards before the solution is ready for transfer to the neutralization tank for the neutralization/precipitation step.

Table 5-2 presents the process parameters for the solution adjustment tank.

Table 5-2. Adjustment Tank Parameters.

Pu poisoning	
Requirement on Fe/Pu ratio	353
Fe(NO3)3 concentration	2.0 M
U235 dilution	
Requirement on U enrichment	< 0.840%
Maximum U enrichment in KE	0.947%
Ratio of concerned sludge in KE	16.50%
Maximum U enrichment in KW	0.947%
Ratio of concerned sludge in KW	16.50%
UO2(NO3)2 concentration	1.0 M
U enrichment in UO2(NO3)2	0.30%
NaNO2 adjustment after neutralization	
NaNO2 final concentration	According to TWRS requirements on [NO2-] or [OH-]+[NO2-]
NaNO2 additives initial concentration	40%
Water adjustment after neutralization	
Solids concentration of slurry sent to TWRS	40 g/l

5.6 NEUTRALIZATION/PRECIPITATION

The acidic dissolver product solution will be reacted with 19 M sodium hydroxide at 40 °C to neutralize the solution and co-precipitate the uranium, plutonium, and iron. The aluminum, americium, and strontium in the solution will also precipitate. A small amount of aluminum may redissolve at a pH greater than 10, but it is assumed that this will be a negligible amount. The cesium will remain in solution.

The amount of NaOH needed to neutralize the solution will be calculated from the amount of uranium and iron absorber added and the uranium, iron, aluminum, and H^+ analyses from the sample taken in the adjustment tank.

Uranyl nitrate reacts with NaOH to form sodium diuranate (nominally $Na_2U_2O_7$ but actually a mixture of salts). The following equation represents the reaction:

$$2UO_2(NO_3)_2 + 6NaOH \rightarrow Na_2U_2O_7 + 4NaNO_3 + 3H_2O$$

The following equation shows the reaction of plutonium nitrate with NaOH:

$$Pu(NO_3)_4 + 4NaOH \rightarrow PuO_2 + 4NaNO_3 + 2H_2O$$

Ferric nitrate and aluminum nitrate react with NaOH according to the following reactions:

$$Fe\ (NO_3)_3 + 3NaOH \rightarrow FeOOH + 3NaNO_3 + H_2O$$

$$Al\ (NO_3)_3 + 3NaOH \rightarrow Al\ (OH)_3 + 3NaNO_3$$

Nitric acid will be neutralized by NaOH as follows:

$$HNO_3 + NaOH \rightarrow NaNO_3 + H_2O$$

Unreacted oxalic acid from the solids treatment steps will be neutralized as follows:

$$H_2C_2O_4 + 2NaOH \rightarrow Na_2C_2O_4 + 2H_2O$$

It is assumed that all of the above reactions will go to completion so 3 moles of NaOH will be needed for every mole of uranium, iron, and aluminum in solution. One mole of NaOH will be needed to neutralize each mole of acid. Additional NaOH as well as $NaNO_2$ will be needed to meet TWRS waste tank requirements. These requirements vary depending on the nitrate concentration. The nitrate concentration in the neutralization tank will vary from less than 1 M to greater than 3 M depending on the sludge stream, so the TWRS requirements for NaOH and $NaNO_2$ also will vary. The neutralization tank will be equipped with cooling coils to remove the heat generated by the neutralization reactions.

The Institute of Physical Chemistry in Moscow, Russia conducted laboratory studies (Krot et al. 1998) to determine optimum precipitation conditions for dissolved sludge. One of the areas studied was the order of mixing to determine if the acidic dissolver solution should be neutralized by direct strike (NaOH added to acid solution) or reverse strike (acid solution added to NaOH). During caustic precipitation, the order of mixing can affect the particle size of the precipitate. The crystal size of the precipitate must be less than 50 μm to meet TWRS acceptance criteria.

The Institute of Physical Chemistry study indicated that both methods of mixing the reactants (direct strike and reverse strike) resulted in a precipitate with a crystal size much less than the 50 μm criterion. The study did not find any clear advantage for either of the orders of mixing. An engineering study of the neutralization process recommended that reverse strike neutralization be used (Klem 1998). The recommendation to use reverse strike for the caustic precipitation was based on the fact that direct strike precipitation of waste streams containing uranium and aluminum has caused line plugging problems at the Hanford Site in the past. Reverse strike neutralization of these same streams produced a slurry that could be transferred without plugging transfer lines. However, the aluminum concentration in the waste streams that caused line plugging problems after direct strike neutralization was considerably higher than it will be in the sludge waste stream.

Because reverse strike neutralization has been selected, the NaOH will be added to the neutralization tank first, and then the acidic sludge stream will be pumped in from the adjustment tank. Following neutralization, $NaNO_2$ will be added.

Dilution water will also need to be added at this time when processing some of the sludge streams to ensure that after precipitation the slurry will be dilute enough that it can be transferred without plugging lines. The current design for the sludge unloading station at tank 241-AW-105 requires pumping the sludge through 15 m of 3.8 m diameter line with a slope of 2.1 cm/m. Laboratory studies by Pacific Northwest National Laboratory have indicated that caustic precipitation of uranium at concentrations greater than 40 g/L will produce a slurry that probably cannot be transferred without risking line pluggage (Ryan 1992). Dilution water will be added as needed to reduce the total solids concentration to less than 40 g/L.

The Institute of Physical Chemistry study also analyzed the plutonium and americium concentration in the supernate after precipitation, and investigated the effects of varying the aluminum, iron, and uranium concentrations. Varying the composition of the solution had little effect on precipitation. The combined plutonium and americium concentration in the supernate after solids precipitation was found to be less than 100 nCi/g, which makes the supernate non-TRU.

Laboratory studies of PCB distribution during neutralization showed that 95% of the PCBs in the liquid ended up with the precipitated solids following neutralization (Mong et al. 1998). Material balance calculations indicate that the maximum PCB concentration in the neutralized waste will be 0.01 ppb in the liquid and 0.66 ppm in the precipitated solids. These concentrations are below the limits of 0.5 ppb in the liquid and 2 ppm in the solids.

The total volume of neutralized waste to be sent to tank 241-AW-105 is approximately 1620 m^3. Table 5-3 shows the total volume generated by each sludge stream and the average composition.

Table 5-3. Sludge Treatment Summary.

	KE1	KE2	KW1	KW2	KW3	Supernate insoluble solids
Total sol'n to TWRS	965.6 m^3	217.4 m^3	92.6 m^3	107.2 m^3	204.5.L m^3	33.2 m^3
Percent of total	59.6%	13.4%	5.7%	6.6%	12.6%	2.0%
Solid conc before H_2O adjustment	14 g/L	52 g/L	4.8 g/L	58 g/L	54 g/L	0.01 g/L
Solid conc after H_2O adjustment	14 g/L	40 g/L	4.8 g/L	40 g/L	40 g/L	0.01 g/L
PCB in liquid	0.01 ppb	0.01 ppb	0.00 ppb	0.00 ppb	0.01 ppb	0.00 ppb
PCB in solids	0.664 ppm	0.005 ppm	0.000 ppm	0.000 ppm	0.008 ppm	0.001 ppm

PCB = polychlorinated biphenyl
TWRS = Tank Waste Remediation System

5.7 LEACHING OF DISSOLVER RESIDUE FOR TRANSURANIC AND CESIUM REMOVAL

Laboratory studies of K Basin sludge dissolution found that the TRU and ^{137}Cs concentration in the undissolved solids exceed the ERDF acceptance criteria. An 8 wt% oxalic solution has been shown to be effective for dissolving iron-bearing sludge at the Savannah River Plant (Bradley and Hill 1977). An engineering study was performed to determine the best chemical reagents to use for leaching the TRU and cesium from the solids (Bechtold 1998). The engineering study recommended several chemical combinations that should be tested in addition to oxalic acid.

The Pacific Northwest National Laboratory conducted laboratory leaching studies to test the recommended leach chemicals using the residue to form K Basin sludge dissolution tests. The leach tests showed that the best solution for leaching TRU and cesium from the dissolver residue was 4.8 M nitric acid and 0.24 M hydrofluoric acid at 90 °C for 4 hours (Delegard et al. 1998). Table 5-4 shows the dissolution factors obtained in the laboratory leaching tests.

Table 5-4. Solid Leaching Process Parameters.

Leaching solution	
Amount	20 cm3/g of residues
HNO3	4.80 M
HF	0.24 M
Dissolution factors on radioactive elements contained in the solids	
Pu	89.00%
Am	95.00%
Cs	68.00%
Sr	83.00%
Dissolution factors of solids	
Al(OH)3	0.00%
Al2O3	0.00%
FeOOH	0.00%
C	0.00%
CaO	0.00%
CO2	0.00%
SiO2	0.00%
Miscellaneous	0.00%
Zircaloy	0.00%
Grafoil	0.00%
U	83.00%
U3O7	83.00%
UH3	83.00%
UO2	83.00%
UO4-4H2O	83.00%
PCB	0.00%
Zeolite	0.00%
OIER	0.00%
Decontamination factors on radioactive elements contained in Resins	
Pu	86.00%
Am	64.00%
Cs	54.00%

In the sludge treatment facility, the nitric acid and hydrofluoric acid will be transferred from separate makeup tanks into the leach tank to make up the leach solution. Following leaching, the leach solution and suspended solids will be sent to the centrifuge for solids/liquid separation and solids washing as described in Section 5.4. The solids will be washed three times with water before being removed from the centrifuge. The chemical composition and particle size distribution of the leached solids will be essentially the same as before leaching. That is, the solids will be mostly SiO_2 with small amounts of Al_2O_3, FeOOH, carbon, and miscellaneous material. The particle size of the leached solids will be in the 0.1 to 200 μm range with more than 96 vol% of the particles greater than 5 μm in diameter.

The washed solids will be transferred from the centrifuge to the solids reception tank for eventual grouting along with the leached resin beads. This will be done at the end of the processing campaign as described in Section 5.9.

The clarified leachate will drain from the centrifuge to the clarified liquid tank and then will be transferred through the cartridge filter to the adjustment tank. There it will be combined with the clarified dissolver product stream.

The sample analysis from the adjustment tank will be used to determine if the solution contains enough aluminum to complex the free fluoride from the leach solution. An aluminum to fluoride mole ratio of 1:3 is needed to complex free fluoride sufficiently to prevent corrosion of 300 Series stainless steel. Adequate aluminum will be present in the combined leach and dissolver product solution when processing most sludge streams. Aluminum nitrate will be added to the adjustment tank, if necessary, to complex the free fluoride.

5.8 LEACHING OF RESIN BEADS FOR TRANSURANIC AND CESIUM REMOVAL

The resin beads that are separated from the sludge stream in the elutriation column will exceed the ERDF acceptance criteria for TRU and ^{137}Cs. An engineering study was done to select chemical reagents that should be used for leach tests of resin beads from K Basin sludge samples (Dodd 1998). The engineering study recommended several reagents, which were then used in laboratory leach tests with resin beads from sludge samples.

The laboratory leach tests indicated that the best reagent for resin bead leaching was a solution of 0.1 M oxalic acid and 2 M nitric acid at 40 °C for 4 hours (Delegard and Rinehart 1998). Table 5-5 shows the decontamination factors obtained in the laboratory leaching tests.

The resin bead leaching will be done in the leach tank. The nitric acid and oxalic acid will be transferred from separate makeup tanks into the leach tank to make up the leach solution.

Following the resin bead leaching, the leach solution and suspended resin beads will be sent to the centrifuge for solids/liquid separation and resin washing as described in Section 5.4. The resin will be washed twice with water before being removed from the centrifuge.

Table 5-5. Resin Leaching Process Parameters.

Leaching solution	
Amount	15 cm3/g of residue
HNO3	2.0 M
Oxalic acid	0.9%
Decontamination factors on radioactive elements contained in Resins	
Pu	86.00%
Am	64.00%
Cs	54.00%
Dissolution factors of solids coming together with the resin stream	
Al(OH)3	90.00%
Al2O3	90.00%
FeOOH	90.00%
C	0.00%
CaO	80.00%
CO2	0.00%
SiO2	0.00%
Miscellaneous	90.00%
Zircaloy	0.00%
Grafoil	0.00%
U	92.50%
U3O7	92.50%
UH3	92.50%
UO2	92.50%
UO4-4H2O	92.50%
PCB	0.00%
Zeolite	0.00%
OIER	0.00%
Dissolution factors on radioactive elements contained in the solids coming together with the resin stream	
Pu	98.00%
Am	82.70%
Cs	53.30%
Sr	92.50%

The washed resin beads will be transferred from the centrifuge to the solids reception tank for eventual grouting along with the undissolved solids. This will be done at the end of the processing campaign as described in Section 5.9.

The leachate will drain from the centrifuge to the clarified liquid tank and will then be transferred through the cartridge filter to the adjustment tank. There it will be combined with the clarified dissolver product stream.

5.9 GROUTING OF RESIN BEADS AND UNDISSOLVED SOLIDS

After each batch of resin beads and undissolved solids from the dissolver are leached with appropriate reagents in the leach tank, they will be transferred as a slurry to the solids reception tank. This tank will be large enough to hold the resin beads and undissolved solids from the entire sludge processing campaign. Including the slurry water, this will come to a total volume of 51 m^3. It will contain approximately 9700 kg of solids/resin on a dry basis. At the end of the campaign, the solids/resin mixture will be thoroughly agitated to homogenize the solids so that representative samples can be obtained. Samples of the solids/resin mixture will be analyzed to characterize the waste and ensure that the grouted waste will meet the ERDF waste acceptance criteria.

When solids characterization has been completed, the solids will be transferred as a slurry to Chem Nuclear L14-170 cask liners for grouting (Pearce 1998). Excess liquid will be decanted from the solids to obtain the appropriate solids/liquid ratio for grouting. The total liquid that will be decanted during the grouting process will be about 32 m^3. This liquid will be routed through the filter for solids removal and then to the neutralization tank for transfer to the underground waste tank.

The grout containers will be equipped with an agitator and addition lines for waste, water, and grout mix. The grout formulation will be based on the composition of the solids. After the grout mix has been added and the mixture allowed to cure, the waste will be ready for transport to ERDF.

The final grout matrix will contain about 15% dry sludge solids. Each L14-170 liner will contain 4.8 m^3 of grouted waste and seven will be required for a total grout volume of about 32 m^3.

Flowsheet calculations show that the TRU concentration of the combined solids in the solids hold tank will be 36 nCi/g which is less than the ERDF limit of 100 nCi/g. The concentration of ^{137}Cs and other radionuclides will also be below the ERDF disposal limits.

5.10 OFFGAS TREATMENT

The dissolver offgas will be routed through a condenser before it is combined with the offgas from the other vessels. The combined offgas will be routed through the NO_x absorption system and high-efficiency mist eliminator, heated above its dew point, and then routed through

HEPA filters and before it is exhausted to the stack. The offgas will be sampled and monitored to verify that it complies with regulatory criteria.

The Washington State Department of Health (DOH) administers radioactive airborne emissions under WAC 246-247. The Washington State Department of Ecology (Ecology) administers nonradioactive air contaminants under WAC 173-400.

The determination of the control and monitoring systems required to comply with BACT and BARCT is dependent on process design and the specific pollutants emitted from the process. The DOH and Ecology must be consulted during the design phase to ensure that BACT and BARCT requirements are met. Therefore, the following discussion is a proposed strategy with the reasoning behind it.

5.10.1 Radioactive Gases

Radioisotopes of iodine, krypton, and xenon are present in nuclear fuel when it is discharged from the reactor and residual amounts may be present in the sludge in the KE and KW Basins. Residual amounts of these gases are expected to be found only in metallic uranium fuel pieces in the sludge. Most of the uranium in the sludge has reacted with water to form uranium oxide compounds. The gaseous fission products associated with this uranium have already been released as the uranium reacted with water. The sludge database document (Pearce et al. 1998) indicates that there will be a total of 3.09 MT of uranium metal in the sludge.

Because all of the fuel in the storage basins has been out of the reactor for at least 10 years and most of it has been out for more than 25 years, short-lived isotopes such as ^{131}I, ^{131m}Xe, and ^{133}Xe have now decayed to insignificant levels. This is confirmed by the fission product decay tables calculated by the ORIGEN computer code (Schwarz 1997). Kryton-85 and ^{129}I have longer half lives so they will still be present in metallic fuel pieces, although ^{129}I is only present at very low concentrations. By the time the sludge is processed, it will be 30 years since most of the fuel in the basins was discharged from the reactor.

Table 5-6 shows the curies/ton of ^{129}I and ^{85}Kr present in 12% ^{240}Pu Mark IV fuel 20 and 30 years after reactor discharge. The data were taken from the ORIGEN computer code printout. Table 5-7 shows the total estimated ^{129}I and ^{85}Kr present in the basin sludge based on 3.09 MT of uranium metal.

Table 5-6. Iodine-129 and Krypton-85 Content of 1 Metric Ton Uranium of N Reactor Fuel.

	20 years after discharge	30 years after discharge
Iodine-129, Ci/MTU	2.648E-3	2.648E-3
Krypton-85, Ci/MTU	251	131

Table 5-7. Total Estimated Iodine-129 and Krypton-85 in K Basin Sludge.

	20 years after discharge	30 years after discharge
Iodine-129, Ci	8.2 E-3	8.2 E-3
Krypton-85, Ci	775	404

Krypton removal and disposal techniques are limited because it is a chemically inert noble gas. Krypton has been removed from reprocessing plant offgas streams using a cryogenic process. However, once the ^{85}Kr is removed, it must be stored in gas cylinders, which may be a worse hazard than allowing it to be released from the stack. Therefore, it should be proposed to DOH that krypton removal equipment not be included in the sludge treatment design.

Technology for iodine removal from offgas is well developed. Control of ^{129}I in the offgas can be done by using a silver zeolite bed or similar iodine removal technology. However, because the total ^{129}I present in the sludge is less than 10 mCi (see Table 5-7), it should be proposed to DOH that iodine removal equipment also is not necessary for the sludge treatment system.

5.10.2 Radioactive Particulates

High-efficiency particulate air filters are commonly identified as BARCT for controlling radioactive particulates (RL 1997). Parallel HEPA filter units will be used so that one filter unit can remain in service while the other is taken off line to replace the filter element. A heater will be necessary upstream from the filters to ensure that the offgas temperature remains above the dewpoint. If moisture reaches the filters it will increase the pressure drop and allow radioactivity to leach through the filter media.

5.10.3 Nitrogen Oxides

Nitrogen oxides will be generated during dissolution of the sludge in nitric acid. The amount of NO_x generated and the mix between NO and NO_2 depends on the dissolver operating conditions and the type of sludge being processed. The state of Washington small-quantity emission limit for NO_x is 7727 kg/yr or 0.91 kg/h. If the NO_x release from the sludge processing facility exceeds these limits, a dispersion modeling analysis must be done to determine the concentration at the Site boundary. The NO_x concentration at the Site boundary must be less than 100 $\mu g/m^3$. The sludge processing facility will be designed to reduce the NO_x to less than 7727 kg/yr or 0.91 kg/h.

The NO_x leaving the dissolver will be a mixture of NO, which is only slightly soluble in water, and NO_2, which is very soluble in water. If air is present in the offgas, oxygen in the air will react with the NO to form NO_2 by the following reaction:

$$2NO + O_2 \rightarrow 2NO_2$$

$$2NO_2 \rightarrow N_2O_4$$

In an absorption column, the NO_2 will be absorbed in water and react to form HNO_3 as follows:

$$N_2O_4 + H_2O \rightarrow HNO_2 + HNO_3$$

$$3HNO_2 \rightarrow 2HNO_3 + NO$$

$$3NO_2 + H_2O \rightarrow 2HNO_3 + NO$$

To recover the NO formed by the last two reactions, it must be reoxidized to NO_2 and absorbed before it leaves the column. An air bleed can be used to help oxidize the NO to NO_2 to improve NO_x recovery efficiency.

Four NO_x absorber configurations were evaluated using a computer model that has been validated by operating data from the La Hague plant in France (Ponvert and Flament 1998). The evaluated configurations are as follows:

- Single column using water as the scrub solution and an air bleed to oxidize the NO to NO_2
- Two absorption columns using water as the scrub solution and an air bleed to oxidize the NO to NO_2
- Two absorption columns – the first using a water scrub and the second using a caustic scrub; air bleed to oxidize the NO to NO_2
- Two absorption columns using water as the scrub solution and oxygen-enriched air (40% O_2) to oxidize the NO to NO_2.

All of the configurations evaluated used 0.21 m diameter packed columns with pall ring packing. The first three configurations used a packing height of 10 m, while the last configuration used a 6 m packing height because the use of oxygen-enriched air for oxidation made it more efficient. The study described the advantages and disadvantages of each configuration. All four of the configurations could reduce the NO_x concentration to less than 0.91 kg/h.

The NO_x concentrations in the Ponvert and Flament study were calculated using the conservative assumption that the sludge is composed of 50% UO_2 and 50% uranium metal with no other components. Because of this conservative assumption, the NO_x flow rate is higher in this study than in the flowsheets calculated in the Appendixes. The flowsheets in the Appendixes were calculated using nominal sludge compositions from the design basis feed document for sludge (Pearce et al. 1998).

An evaluation based on BACT is needed to finalize the NO_x control configuration. The DOH and Ecology must be consulted at this time to ensure that the BACT requirement is met.

There appears to be a considerable benefit in using enriched air to reduce the column height, so the fourth configuration was selected as the baseline for the sludge processing facility. The following paragraphs describe the NO_x recovery system.

The initial NO_x removal from the dissolver offgas will occur in the downdraft condenser. The remaining NO_x removal will be achieved by a NO_x absorption system consisting of two columns with water used as the scrub solution. Air enriched to 40% oxygen will be added upstream of the absorption columns to oxidize NO to NO_2.

Scrub solution draining from the bottom of the columns will be collected in a tank and recirculated to the top of the columns. The scrub solution will be cooled to improve NO_x absorption efficiency.

When the HNO_3 concentration in the scrub solution increases to 6 M, part of the scrub solution will be transferred to the dissolver during makeup of a batch of dissolver solution. Fresh water will be added to the top of the absorption column to replenish the volume of scrub solution. The absorption column will be designed to remove a minimum of 90% of the NO_x leaving the condenser. The configurations evaluated in the engineering study achieved greater than 95% NO_x removal.

The absorption of NO_x in water or dilute HNO_3 is a widely used commercial process. In the past, the DOH has accepted absorption columns as BACT for NO_x recovery at the Plutonium-Uranium Extraction and UO_3 plants at the Hanford Site.

5.10.4 Polychlorinated Biphenyls

Laboratory studies have been done of the PCB distribution in boiling nitric acid containing iron filings to simulate conditions in the sludge dissolver (Mong et al. 1998). The results of these studies showed that after 8 hours in boiling HNO_3, 30% of the PCBs were adsorbed on the solids, 50% plated out on the laboratory glassware used to conduct the test, and 20% was volatilized into the offgas system. The PCB distribution in the sludge processing facility may be somewhat different than it was in the laboratory test because the laboratory tests were done using much higher PCB concentrations than will be present in the sludge dissolver. This was done to get more accurate analytical results than could be obtained if the lower PCB concentrations that will be present in the sludge dissolver were used in the tests.

Because there is considerable uncertainty in extrapolating the results of the laboratory PCB tests to plant conditions, a granulated activated carbon bed should be installed in the offgas system to ensure that the PCB concentration in the offgas will be less than the 10 $\mu g/m^3$ limit. Granulated activated carbon is an established technology for trapping PCBs in offgas systems (Ashworth 1998).

5.11 SLUDGE TREATMENT SUMMARY

The sludge processing facility described in this document will receive a total of 50.6 m^3 of sludge. This sludge will be processed in 214 batches, which will generate about 1620 m^3 of waste slurry that will be transferred to a double-shell waste tank. The waste will contain approximately 35,400 kg of solids (dry basis).

The process will also generate about 32 m^3 of grouted waste that will be transported to ERDF for disposal. This will take seven grout containers each having a capacity of 4.8 m^3. There will also be 49 waste drums generated for disposal of filter cartridges. Forty-six of the filter cartridges will be grouted in drums sent to ERDF, one will be TRU waste that will eventually be sent to WIPP, and two filter cartridges will be TRU waste containing PCBs at concentrations too high to go to either ERDF or WIPP. These two filter cartridges will be stored in drums until a disposal path is determined.

Table 5-8 shows a summary of sludge treatment parameters for the five sludge streams and the grouted waste.

Table 5-8. Sludge Treatment Summary.

	KE1	KE2	KW1	KW2	KW3	Residues Grouting	TOTAL
Initial Sludges							
Volume of as-settled sludges	41.5 m3	2.4 m3	4.7 m3	0.2 m3	1.9 m3		**50.58 m3**
%	*82.0%*	*4.7%*	*9.2%*	*0.4%*	*3.7%*		
Total Solids	564 g/l	1650 g/l	382 g/l	8216 g/l	1910 g/l		
U	63 g/l	1190 g/l	19 g/l	7375 g/l	1175 g/l		
PCB in solid	191.5 ppm	0.6 ppm	0.0 ppm	0.0 ppm	4.2 ppm		
TRU	17 335 nCi/g	192 684 nCi/g	6 666 nCi/g	265 889 nCi/g	192 508 nCi/g		
OIER	29.4 kg/m3	14.4 kg/m3	0.0 kg/m3	0.0 kg/m3	0.0 kg/m3		
Sludge treatment							
Number of batches	146.1	24.4	11.2	10.2	22.4		**214.4**
Dry solids per batch	160 kg	160 kg	160 kg	160 kg	160 kg		
Dissolution condition	6.0 M	6.0 M	6.0 M	6.0 M	6.0 M		
Conditionned wastes to ERDF							
Amount of dry residues to be grouted	8,115 kg	297 kg	1,134 kg	150 kg	119 kg	9,815 kg	**9,815 kg**
%	*82.7%*	*3.0%*	*11.6%*	*1.5%*	*1.2%*		
Total amount of grouted wastes produced						65,434 kg	**65,434 kg**
Number of 4.8 m3 liners drums produced						6.7	**6.7**
TRU						31 nCi/g	31 nCi/g
Wastes to TWRS							
Total solution sent to TWRS	965.6 m3	217.4 m3	92.6 m3	107.2 m3	204.5 m3	33.2 m3	**1620 m3**
%	*59.6%*	*13.4%*	*5.7%*	*6.6%*	*12.6%*	*2.0%*	
Ratio Final Vol / Ini Vol	5.4	7.5	6.8	8.9	7.6		7.6
Solid concentration before water adjustem	14 g/l	52 g/l	4.8 g/l	58 g/l	54 g/l	0.01 g/l	17 g/l
Solid concentration after water adjustemen	14 g/l	40 g/l	4.8 g/l	40 g/l	40 g/l	0.01 g/l	22 g/l
PCB liq	0.01 ppb	0.01 ppb	0.00 ppb	0.00 ppb	0.01 ppb	0.00 ppb	0.01 ppb
PCB sol	0.664 ppm	0.005 ppm	0.000 ppm	0.000 ppm	0.008 ppm	0.001 ppm	0.262 ppm
Filters							
Number	40.4	1.3	5.5	0.6	0.6		**48.4**
%	*83.6%*	*2.6%*	*11.4%*	*1.2%*	*1.2%*		
PCB sol	4.870 ppm	53.257 ppm	0.000 ppm	0.000 ppm	152.172 ppm		
TRU Activity	29 nCi/g	6 643 nCi/g	8 nCi/g	5 385 nCi/g	10 386 nCi/g		
Destination	ERDF	WIPP	ERDF	WIPP	WIPP		

6.0 REFERENCES

10 CFR 61, "Licensing Requirements for Land Disposal of Radioactive Waste," *Code of Federal Regulations*, as amended.

Allen, G. K., 1985, *PUREX Flowsheet Reprocessing N Reactor Fuels*, Rev. A-8, Rockwell Hanford Company, Richland, Washington.

Ashworth, S. C., 1998, *K Basin Sludge Polychlorinated Biphenyl Removal Technology Assessment*, HNF-3095, Rev. 0, prepared by Numatec Hanford Corporation for Fluor Daniel Hanford, Inc., Richland, Washington.

Bechtold, D. B., 1998, *Study of Radionuclide Leaching from the Residues of K Basin Sludge Dissolution*, HNF-2917, Rev. 0, prepared by Numatec Hanford Corporation for Fluor Daniel Hanford, Inc., Richland, Washington.

Beck, M. A., 1998, *K Basin Gel Formation Studies*, HNF-2911, Rev. 0, prepared by Numatec Hanford Corporation for Fluor Daniel Hanford, Inc., Richland, Washington.

BHI, 1998, *Environmental Restoration Disposal Facility Waste Acceptance Criteria*, BHI-00139, Rev. 3, Bechtel Hanford, Inc., Richland, Washington.

Bradley, R. F., and A. J. Hill, 1977, *Chemical Dissolving of Sludge from a High Level Waste Tank at the Savannah River Plant*, E. I. Du Pont de Nemours and Co., Aiken, South Carolina.

Bredt, P. R., C. H. Delegard, A. J. Schmidt, A. H. Zacher, B. M. Thornton, and K. L. Silvers, 1998, *K Basin Sludge Scoping and Supplementary Analyses*, Letter Report No. 28507-05, Pacific Northwest National Laboratory, Richland, Washington.

Carlson, C. D., C. H. Delegard, I. E. Burgeson, A. J. Schmidt, and K. L. Silvers, 1998a, *K Basin Sludge Conditioning Testing – Nitric Dissolution Testing of K East Area Sludge Composite, Small and Large Scale Testing*, Letter Report No. 29317-10, Pacific Northwest National Laboratory, Richland, Washington.

Carlson, C. D., C. H. Delegard, I. E. Burgeson, A. J. Schmidt, and K. L. Silvers, 1998b, *K Basin Sludge Conditioning Testing – Nitric Acid Dissolution Testing of K East Canister Sludge*, Letter Report No. 29317-09, Pacific Northwest National Laboratory, Richland, Washington.

Carothers, K. G., K. D. Fowler, and J. P. Sloughter, 1997, *K Basin Sludge Pretreatment Requirements Summary*, HNF-SD-TWR-OCD-001, prepared by Lockheed Martin Hanford Corporation for Fluor Daniel Hanford, Inc., Richland, Washington.

Delegard, C. H., D. E. Rinehart, C. D. Carlson, C. Z. Soderquist, and S. K. Fadeff, 1998, *Radionuclide Leaching from Residual Solids Remaining after Acid Dissolution of K East Area Sludge Composite*, Letter Report No. 29317-11, Pacific Northwest National Laboratory, Richland, Washington.

Delegard, C. H., and D. E. Rinehart, 1998, *Radionuclide Leaching from Organic Ion Exchange Resins*, Letter Report No. 29137-8, Pacific Northwest National Laboratory, Richland, Washington.

Dodd, D. A., 1998, *Engineering Study: Recommendation for Removing Radionuclides from Organic Ion Exchange Resin in K Basin Sludge*, HNF-2802, Rev. 0, prepared by Numatec Hanford Corporation for Fluor Daniel Hanford, Inc., Richland, Washington.

Duncan, J. B., and T. A. Flament, 1998, *Separation of Organic Ion Exchange Resins from Sludge*, HNF-3128, Rev. 0, prepared by Numatec Hanford Corporation for Fluor Daniel Hanford, Inc., Richland, Washington.

Duncan, J. B., and J. J. Zimmer, 1998, *Engineering Evaluation of Liquid/Solid Separation Processes Applicable to the Sludge Treatment Project*, HNF-3117, Rev. 0, prepared by Numatec Hanford Corporation for Fluor Daniel Hanford, Inc., Richland, Washington.

Flament, T. A., 1998, *Testing Strategy to Support the Development of K Basin Sludge Treatment Process*, HNF-2574, Rev. 0, prepared by Numatec Hanford Corporation for Fluor Daniel Hanford, Inc., Richland, Washington.

Kessler, S. F., 1998, *Criticality Safety Evaluation Report for the Cold Vacuum Drying Facility's Process Water Handling System*, HNF-SD-SNF-CSER-006, Rev. 1, prepared by Fluor Daniel Northwest, Inc., for Fluor Daniel Hanford, Inc., Richland, Washington.

Klem, M. J., 1998, *Engineering Evaluation of Neutralization and Precipitation Processes Applicable to the Sludge Treatment Project*, HNF-3130, Rev. 0, prepared by Numatec Hanford Corporation for Fluor Daniel Hanford, Inc., Richland, Washington.

Krot, N. N., V. P. Shilov, A. M. Fedoseev, A. B. Yusov, A. A. Bessonov, N. A. Budantseva, S. I. Nikitenko, G. M. Plavnik, T. P. Puraeva, M. S. Grigoriev, A. Y. Garnov, V. Gelis, V. P. Perminov, and N. Astafurova, 1998, *Study of the Alkaline Treatment of Acidic Dissolver Solution from the Hanford Site K Basin Sludge for its Disposal to the High-Level Waste Storage Tanks*, Letter Report No. 29005-7, Pacific Northwest National Laboratory, Richland, Washington.

Makenas, B. J., editor, 1997, *Analysis of Sludge from Hanford K East Basin Canisters*, HNF-SP-1201, U.S. Department of Energy, Richland Operations Office, Richland, Washington.

Mong, G. M., E. W. Hoppe, K. H. Pool, A. J. Schmidt, K. L. Silvers, and B. M. Thornton, 1998, *K Basin Sludge Conditioning Process Testing-Fate of PCB During K Basin Sludge Dissolution in Nitric Acid and With Hydrogen Peroxide*, Letter Report No. 28510-12, Pacific Northwest National Laboratory, Richland, Washington.

Nevers, A. C., and T. A. Flament, 1998, *Dissolution of Sludges Containing Uranium Dioxide and Metallic Uranium in Nitric Acid*, HNF-3119, Rev. 0, prepared by SGN for Fluor Daniel Hanford, Inc., Richland, Washington.

Pearce, K. L., T. A. Flament, and S. C. Klimper, 1998, *105-K Basin Material Design Basis Feed Description for Spent Nuclear Fuel Project Facilities*, Vol. 2, "Sludge," HNF-SD-SNF-TI-009, Rev. 0, prepared by Numatec Hanford Corporation for Fluor Daniel Hanford, Inc., Richland, Washington.

Pearce, K. L., 1998, *Solidification Process for Sludge Residue*, HNF-3129, Rev. 0, prepared by Numatec Hanford Corporation for Fluor Daniel Hanford, Inc., Richland, Washington.

Poole, K. H., C. H. Delegard, A. J. Schmidt, B. M. Thornton, and K. L. Silvers, 1998a, *Results from Test 4, Acid Digestion of Mixed-bed Ion Exchange Resins*, Letter Report No. 28510-10, Pacific Northwest National Laboratory, Richland, Washington.

Poole, K. H., C. H. Delegard, A. J. Schmidt, and K. L. Silvers, 1998b, *Results from Test 1 Acid Digestion of Zeolite and Hydrated Iron Oxide in Proportions Representative of Analyzed KE Sludge Materials*, Letter Report No. 28510-04, Pacific Northwest National Laboratory, Richland, Washington.

Ponvert, M., and T. A. Flament, 1998, *Treatment of Nitrous Offgas from Dissolution of Sludges*, HNF-3118, Rev. 0, prepared by SGN for Fluor Daniel Hanford, Inc., Richland, Washington.

RL, 1997, *Engineering Evaluation/Cost Analysis for the K Basins Removal Action*, DOE/RL-97-45, U.S. Department of Energy, Richland Operations Office, Richland, Washington.

Ryan, J. L., 1992, *Neutralization of Uranyl Nitrate Solutions*, Pacific Northwest Laboratories, Richland, Washington.

Schwarz, R. A., 1997, *Modifications to ORIGEN2 for Generating N Reactor Source Terms*, PNNL-11555, Pacific Northwest National Laboratory, Richland, Washington.

Squier, D., 1998, *K Basin Sludge/Resin Bead Separation Test Report*, HNF-3132, Rev. 0, prepared by Numatec Hanford Corporation for Fluor Daniel Hanford, Inc., Richland, Washington.

Terry, B., 1983, "The Acid Decomposition of Silicate Minerals Part II, Hydrometallurgical Applications," *Hydrometallurgy*, 10:151-171.

Toxic Substances Control Act of 1976, 15 USC 2601, et seq.

WAC 173-303, "Dangerous Waste Regulations," *Washington Administrative Code*, as amended.

WAC 173-400, "General Regulations for Air Pollution Sources," *Washington Administrative Code*, as amended.

WAC 173-460, "Controls for New Sources of Toxic Air Pollutants," *Washington Administrative Code*, as amended.

WAC 246-247, "Radiation Protection--Air Emissions," *Washington Administrative Code*, as amended.

Westra, A. G., and T. A. Flament, 1998, *K Basin Sludge Dissolution Engineering Study*, HNF-3096, Rev. 0, prepared by Numatec Hanford Corporation for Fluor Daniel Hanford, Inc., Richland, Washington.

APPENDIX A

KE1 STREAM

This page intentionally left blank.

SLUDGE TREATMENT
CHEMICAL FLOW SHEET

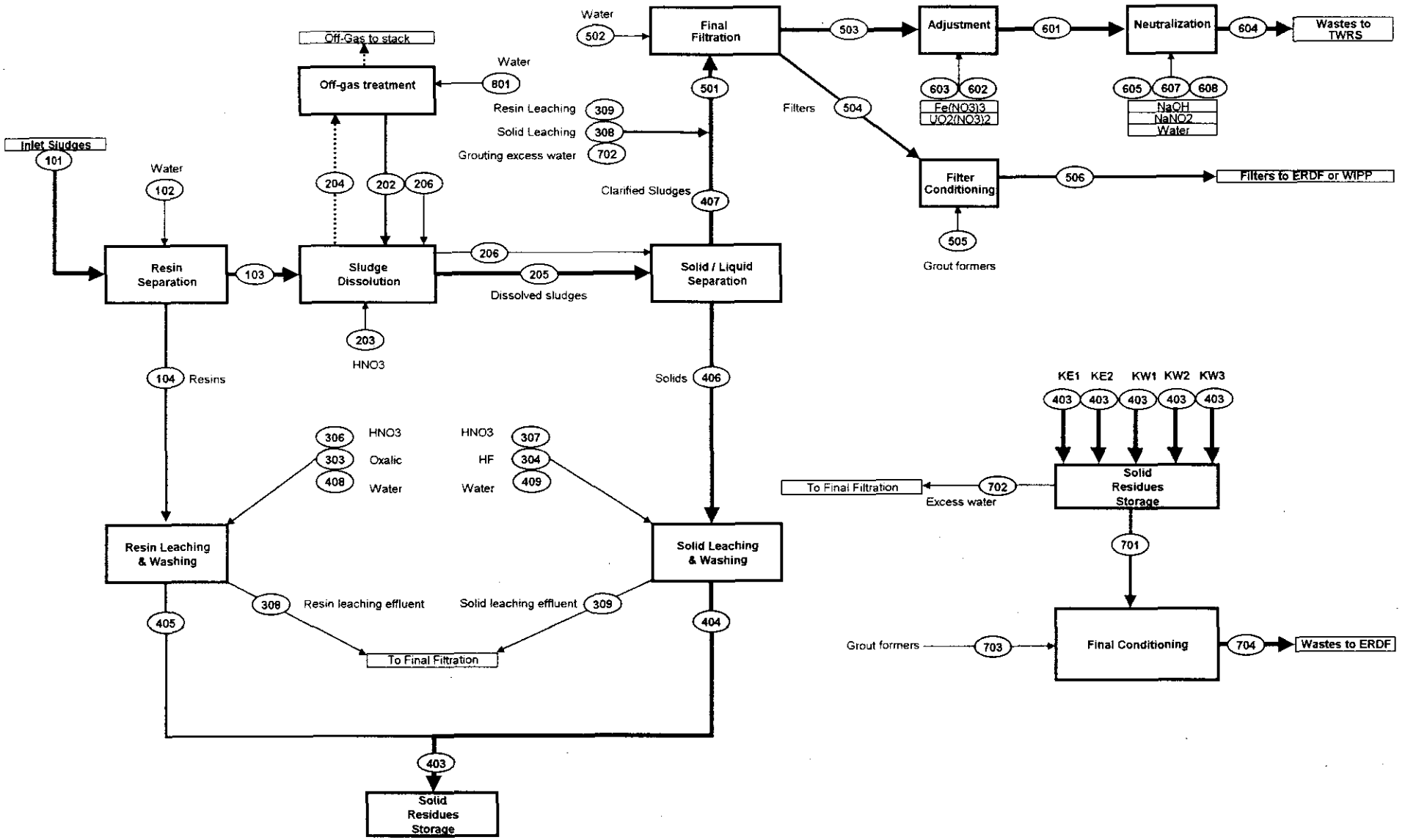

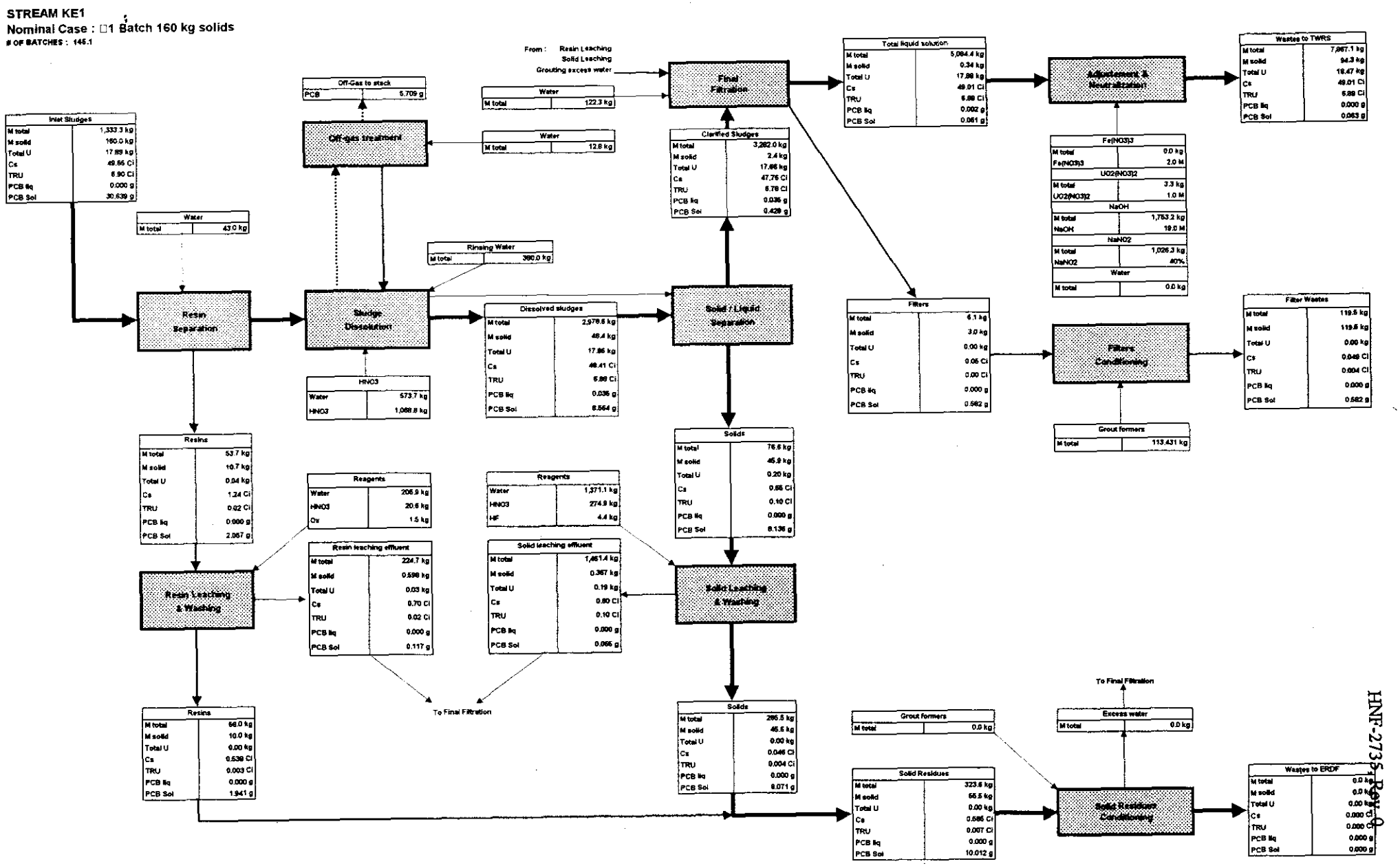
STREAM KE1
Nominal Case : □1 Batch 160 kg solids
OF BATCHES : 145.1
Inlet Sludges
M total 1,333.3 kg
M solid 160.0 kg
Total U 17.89 kg
Cs 49.66 Ci
TRU 6.90 Ci
PCB liq 0.000 g
PCB Sol 30,639 g
Water
M total 43.0 kg
Resin Separation
Resins
M total 53.7 kg
M solid 10.7 kg
Total U 0.04 kg
Cs 1.24 Ci
TRU 0.02 Ci
PCB liq 0.000 g
PCB Sol 2.067 g
Resin Leaching & Washing
Resins
M total 68.0 kg
M solid 10.0 kg
Total U 0.00 kg
Cs 0.539 Ci
TRU 0.003 Ci
PCB liq 0.000 g
PCB Sol 1.941 g
Off-Gas to stack
PCB 5.709 g
Off-gas treatment
Water
M total 12.8 kg
Rinsing Water
M total 380.0 kg
Sludge Dissolution
HNO3
Water 573.7 kg
HNO3 1,068.8 kg
Dissolved sludges
M total 2,978.6 kg
M solid 48.4 kg
Total U 17.86 kg
Cs 46.41 Ci
TRU 6.88 Ci
PCB liq 0.036 g
PCB Sol 8.564 g
Reagents
Water 206.9 kg
HNO3 20.6 kg
Ox 1.5 kg
Resin leaching effluent
M total 224.7 kg
M solid 0.598 kg
Total U 0.03 kg
Cs 0.70 Ci
TRU 0.02 Ci
PCB liq 0.000 g
PCB Sol 0.117 g
Reagents
Water 1,371.1 kg
HNO3 274.9 kg
HF 4.4 kg
Solid leaching effluent
M total 1,651.4 kg
M solid 0.367 kg
Total U 0.19 kg
Cs 0.80 Ci
TRU 0.10 Ci
PCB liq 0.000 g
PCB Sol 0.065 g
To Final Filtration
From : Resin Leaching
Solid Leaching
Grouting excess water
Final Filtration
Clarified Sludges
M total 3,282.0 kg
M solid 2.4 kg
Total U 17.86 kg
Cs 47.76 Ci
TRU 6.78 Ci
PCB liq 0.036 g
PCB Sol 0.429 g
Solid / Liquid Separation
Solids
M total 76.6 kg
M solid 45.9 kg
Total U 0.20 kg
Cs 0.66 Ci
TRU 0.10 Ci
PCB liq 0.000 g
PCB Sol 8.136 g
Solid Leaching & Washing
Solids
M total 295.5 kg
M solid 45.5 kg
Total U 0.00 kg
Cs 0.046 Ci
TRU 0.004 Ci
PCB liq 0.000 g
PCB Sol 8.071 g
Total liquid solution
M total 5,084.4 kg
M solid 0.34 kg
Total U 17.86 kg
Cs 49.01 Ci
TRU 6.88 Ci
PCB liq 0.002 g
PCB Sol 0.061 g
Filters
M total 6.1 kg
M solid 3.0 kg
Total U 0.00 kg
Cs 0.05 Ci
TRU 0.00 Ci
PCB liq 0.000 g
PCB Sol 0.562 g
Grout formers
M total 0.0 kg
Solid Residues
M total 323.8 kg
M solid 55.5 kg
Total U 0.00 kg
Cs 0.585 Ci
TRU 0.007 Ci
PCB liq 0.000 g
PCB Sol 10.012 g
Adjustement & Neutralization
Fe(NO3)3
M total 0.0 kg
Fe(NO3)3 2.0 M
UO2(NO3)2
M total 3.3 kg
UO2(NO3)2 1.0 M
NaOH
M total 1,753.2 kg
NaOH 19.0 M
NaNO2
M total 1,026.3 kg
NaNO2 40%
Water
M total 0.0 kg
Filters Conditioning
Grout formers
M total 113.431 kg
Solid Residues Conditioning
Excess water
M total 0.0 kg
To Final Filtration
Wastes to TWRS
M total 7,867.1 kg
M solid 94.3 kg
Total U 18.47 kg
Cs 49.01 Ci
TRU 6.89 Ci
PCB liq 0.000 g
PCB Sol 0.063 g
Filter Wastes
M total 119.5 kg
M solid 119.5 kg
Total U 0.00 kg
Cs 0.049 Ci
TRU 0.004 Ci
PCB liq 0.000 g
PCB Sol 0.582 g
Wastes to ERDF
M total 0.0 kg
M solid 0.0 kg
Total U 0.00 kg
Cs 0.000 Ci
TRU 0.000 Ci
PCB liq 0.000 g
PCB Sol 0.000 g

SLUDGE TREATMENT
CONCENTRATION

STREAM KE1
Nominal Case : □1 Batch 160 kg solids

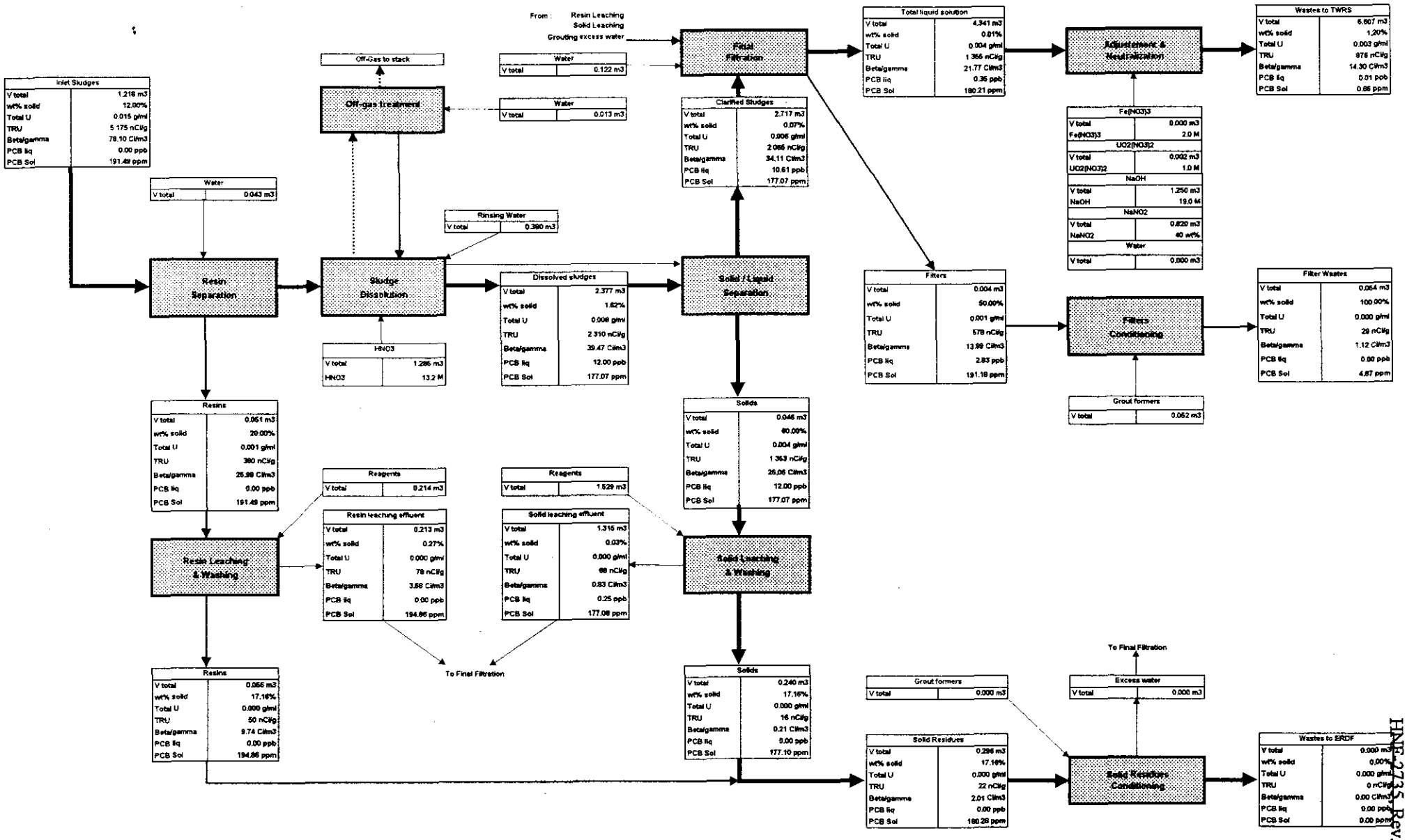

HNF-2735 Rev. 0

Requirements

STREAM KE1	Requirements		Obtained results
Effluent sent to TWRS	**TWRS Requirements**		
PCB in liq	< 0.5 ppb		0.01 ppb
PCB in sol	< 2 ppm		0.664 ppm
Concentration	< 40 g/l		14.27 g/l
Na(NO3) concentration			3.28 M
NaOH Concentration	Req on [OH-] : 0.30 M		0.30 M
NaOH + Na(NO2) Concentration	Req on [OH-]+[NO2-] : 1.20 M		1.20 M
Na(NO2) concentration	Req on [NO2-] : none		0.90 M
Volume generated m3			**966 m3**
Filters : Grouted sent to ERDF or sent as-is to WIPP	**ERDF Requirements**	**WIPP Requirements**	
PCB (ppm)		< 2 ppm	4.870 ppm
U g/ml	< 0.026 g/ml		0.0001 g/ml
Pu(Total)	Ci/m3		0.040 Ci/m3
238 Pu	< 1.5 Ci/m3		0.008 Ci/m3
239 Pu	< 0.029 Ci/m3		0.016 Ci/m3
240 Pu	< 0.029 Ci/m3		0.016 Ci/m3
Am	< 0.05 Ci/m3		0.025 Ci/m3
TRU	< 100 nanoCi/g	> 100 nanoCi/g	29 nCi/g
Volume generated m3			8.1 m3
Number of 0.2 m3 drums			**40.4**

DETAILED STREAM DATA SHEET FOR ONE DAILY BATCH

STREAM KE1 Nominal Case : 1 Batch 160 kg solids	ST-101 SLUDGE AT INLET OF TREATMENT UNIT	ST-102 WATER ADDITION FOR SCREEN WASHING	ST-103 SLUDGE STREAM FROM RESIN SEPARATION	ST-104 RESIN STREAM FROM RESIN SEPARATION	ST-201 SLUDGE TO DISSOLVER	ST-202 RECYCLED NITRIC ACID	ST-203 HNO3 FOR DISSOLUTION	ST-204 DISSOLUTION OFF-GAS	ST-205 DISSOLUTION SOLUTION
Volume	*1.218 m3*	*0.043 m3*	*1.214 m3*	*0.051 m3*	*1.214 m3*	*0.017 m3*	*1.285 m3*	*2.258 m3*	*2.377 m3*
Density	*1.094*	*1.000*	*1.090*	*1.051*	*1.090*	*1.125*	*1.278*	*0.002*	*1.253*
Total Mass	**1,333.333 kg**	**42.972 kg**	**1,322.590 kg**	**53.715 kg**	**1,322.590 kg**	**19.294 kg**	**1,642.482 kg**	**4.428 kg**	**2,978.585 kg**
Number of packages									
LIQUID									
Volume	*1.173 m3*	*0.043 m3*	*1.173 m3*	*0.043 m3*	*1.173 m3*	*0.017 m3*	*1.285 m3*	*2.258 m3*	*2.355 m3*
Density	*1.000*	*1.000*	*1.000*	*1.000*	*1.000*	*1.125*	*1.278*	*0.002*	*1.244*
Total Mass Liquid + Gaz	**1,173.333 kg**	**42.972 kg**	**1,173.333 kg**	**42.972 kg**	**1,173.333 kg**	**19.294 kg**	**1,642.482 kg**	**4.428 kg**	**2,930.219 kg**
H2O	1,173.333 kg	42.972 kg	1,173.333 kg	42.972 kg	1,173.333 kg	12.811 kg	573.712 kg		1,791.219 kg
HNO3						6.483 kg	1,068.770 kg		899.000 kg
H2C2O4									
HF									
NaOH									
Al(NO3)3									51.655 kg
AlF3									
Fe(NO3)3									146.499 kg
CaO									1.739 kg
NaNO2									
NaNO3									
Miscellaneous									10.559 kg
UO2(NO3)2									29.548 kg
Pu									*2.973 Ci*
Am									*3.873 Ci*
Cs									*48.258 Ci*
Sr									*45.400 Ci*
PCB									*0.035 g*
GAZ									
NO2								3.855 kg	
NO								0.573 kg	
PCB								*5.709 g*	
SOLIDS + RESINS									
Volume	*0.045 m3*		*0.040 m3*	*0.008 m3*	*0.040 m3*				*0.022 m3*
Density	*3.551*		*3.712*	*1.317*	*3.712*				*2.185*
Total Mass Solids + Resins	**160.000 kg**		**149.257 kg**	**10.743 kg**	**149.257 kg**				**48.366 kg**
Wt% solids	*12.00 wt%*	*0.00 wt%*	*11.29 wt%*	*20.00 wt%*	*11.29 wt%*	*0.00 wt%*	*0.00 wt%*	*0.00 wt%*	*1.62 wt%*
Al(NO3)3									
Al(OH)3	1.804 kg		1.800 kg	0.004 kg	1.800 kg				0.018 kg
Al2O3	11.816 kg		11.793 kg	0.024 kg	11.793 kg				0.590 kg
Fe(NO3)3									
FeOOH	54.473 kg		54.364 kg	0.109 kg	54.364 kg				0.544 kg
C	0.186 kg		0.185 kg	0.000 kg	0.185 kg				0.185 kg
CaO	1.936 kg		1.932 kg	0.004 kg	1.932 kg				0.193 kg
Na2C2O4									
CO2	1.417 kg		1.415 kg	0.003 kg	1.415 kg				
H2O									
SiO2	43.862 kg		43.775 kg	0.088 kg	43.775 kg				43.775 kg
Grout									
Miscellaneous	10.687 kg		10.665 kg	0.021 kg	10.665 kg				0.107 kg
Zircaloy									
Grafoil									
HNO3									
H2C2O4									
Na2U2O7									
U	0.331 kg		0.330 kg	0.001 kg	0.330 kg				0.000 kg
U3O7	8.145 kg		8.129 kg	0.016 kg	8.129 kg				0.004 kg
UH3	0.545 kg		0.544 kg	0.001 kg	0.544 kg				0.000 kg
UO2	11.123 kg		11.101 kg	0.022 kg	11.101 kg				0.006 kg
UO2(NO3)2									
UO4-4H2O	0.281 kg		0.280 kg	0.001 kg	0.280 kg				0.000 kg
Pu	*3.006 Ci*		*3.000 Ci*	*0.006 Ci*	*3.000 Ci*				*0.009 Ci*
Am	*3.886 Ci*		*3.879 Ci*	*0.008 Ci*	*3.879 Ci*				*0.004 Ci*
Cs	*48.446 Ci*		*48.350 Ci*	*0.097 Ci*	*48.350 Ci*				*0.145 Ci*
Sr	*45.514 Ci*		*45.423 Ci*	*0.091 Ci*	*45.423 Ci*				*0.023 Ci*
PCB	*30.639 g*		*28.582 g*	*2.057 g*	*28.582 g*				*8.564 g*
RESINS									
Zeolite	5.055 kg		2.527 kg	2.527 kg	2.527 kg				2.527 kg
OIER	8.339 kg		0.417 kg	7.922 kg	0.417 kg				0.417 kg
Pu	*0.004 Ci*		*0.000 Ci*	*0.004 Ci*	*0.000 Ci*				*0.019 Ci*
Am	*0.003 Ci*		*0.000 Ci*	*0.003 Ci*	*0.000 Ci*				*0.002 Ci*
Cs	*1.201 Ci*		*0.060 Ci*	*1.141 Ci*	*0.060 Ci*				*0.006 Ci*
TOTAL ACTIVITIES									
Total U	17.893 kg		17.858 kg	0.036 kg	17.858 kg				17.858 kg
Total Pu	3.010 Ci		3.001 Ci	0.010 Ci	3.001 Ci				3.001 Ci
Total Am	3.889 Ci		3.879 Ci	0.011 Ci	3.879 Ci				3.879 Ci
TRU	**6.900 Ci**		**6.879 Ci**	**0.020 Ci**	**6.879 Ci**				**6.879 Ci**
Total Cs	49.647 Ci		48.410 Ci	1.238 Ci	48.410 Ci				48.410 Ci
Total Sr	45.514 Ci		45.423 Ci	0.091 Ci	45.423 Ci				45.423 Ci
Beta Gamma	**95.161 Ci**		**93.832 Ci**	**1.329 Ci**	**93.832 Ci**				**93.832 Ci**
CONCENTRATION									
PCB in liquid									12.00 ppb
PCB in solids	191.495 ppm		191.495 ppm	191.495 ppm	191.495 ppm				177.068 ppm
Solids	131.32 g/l		122.99 g/l	210.11 g/l	2.47 g/l				20.34 g/l
U	0.015 g/cm3		0.015 g/cm3	0.001 g/cm3	0.015 g/cm3				0.008 g/cm3
Pu total	**2.471 Ci/m3**		**2.473 Ci/m3**	**0.190 Ci/m3**	**2.473 Ci/m3**				**1.262 Ci/m3**
238 Pu	0.494 Ci/m3		0.495 Ci/m3	0.038 Ci/m3	0.495 Ci/m3				0.252 Ci/m3
239 Pu	0.988 Ci/m3		0.989 Ci/m3	0.076 Ci/m3	0.989 Ci/m3				0.505 Ci/m3
240 Pu	0.988 Ci/m3		0.989 Ci/m3	0.076 Ci/m3	0.989 Ci/m3				0.505 Ci/m3
Am	3.192 Ci/m3		3.196 Ci/m3	0.209 Ci/m3	3.196 Ci/m3				1.632 Ci/m3
TRU	5.663 Ci/m3		5.669 Ci/m3	0.399 Ci/m3	5.669 Ci/m3				2.894 Ci/m3
TRU	**5 175 nCi/g**		**5 201 nCi/g**	**380 nCi/g**	**5 201 nCi/g**				**2 310 nCi/g**
Beta Gamma	**78.104 Ci/m3**		**77.321 Ci/m3**	**25.988 Ci/m3**	**77.321 Ci/m3**				**39.469 Ci/m3**

DETAILED STREAM DATA SHEET FOR ONE DAILY BATCH

STREAM KE1 Nominal Case : 1 Batch 160 kg solids	ST-206 DISSOLVER WASHING WATER	ST-301 RESIN STREAM TO LEACHING	ST-302 TOTAL REAGENTS FOR RESINS AND SOLIDS LEACHING	ST-303 TOTAL OXALIC USED FOR RESIN LEACHING AND WASHING	ST-304 TOTAL HF USED FOR SOLIDS LEACHING AND WASHING	ST-305 TOTAL HNO3 USED FOR RESINS AND SOLIDS LEACHING	ST-306 TOTAL HNO3 USED FOR RESIN LEACHING AND WASHING	ST-307 TOTAL HNO3 USED FOR SOLIDS LEACHING AND WASHING	ST-308 TOTAL CLARIFIED SOLUTION FROM RESIN LEACHING
Volume	*0.380 m3*	*0.051 m3*	*0.836 m3*	*0.081 m3*	*0.399 m3*	*0.355 m3*	*0.025 m3*	*0.331 m3*	*0.213 m3*
Density	*1.000*	*1.051*	*1.164*	*1.100*	*1.075*	*1.278*	*1.278*	*1.278*	*1.054*
Total Mass	**380.000 kg**	**53.715 kg**	**972.599 kg**	**89.299 kg**	**429.067 kg**	**454.233 kg**	**31.696 kg**	**422.537 kg**	**224.730 kg**
Number of packages									
LIQUID									
Volume	*0.380 m3*	*0.043 m3*	*0.836 m3*	*0.081 m3*	*0.399 m3*	*0.355 m3*	*0.025 m3*	*0.331 m3*	*0.213 m3*
Density	*1.000*	*1.000*	*1.164*	*1.100*	*1.075*	*1.278*	*1.278*	*1.278*	*1.054*
Total Mass Liquid + Gaz	**380.000 kg**	**42.972 kg**	**972.599 kg**	**89.299 kg**	**429.067 kg**	**454.233 kg**	**31.696 kg**	**422.537 kg**	**224.132 kg**
H2O	380.000 kg	42.972 kg	671.128 kg	87.799 kg	424.667 kg	158.662 kg	11.071 kg	147.590 kg	201.915 kg
HNO3			295.571 kg			295.571 kg	20.625 kg	274.946 kg	20.277 kg
H2C2O4			1.500 kg	1.500 kg					1.498 kg
HF			4.400 kg		4.400 kg				
NaOH									
Al(NO3)3									0.098 kg
AlF3									
Fe(NO3)3									0.267 kg
CaO									0.003 kg
NaNO2									
NaNO3									
Miscellaneous									0.019 kg
UO2(NO3)2									0.055 kg
Pu									*0.009 Ci*
Am									*0.008 Ci*
Cs									*0.667 Ci*
Sr									*0.084 Ci*
PCB									
GAZ									
NO2									
NO									
PCB									
SOLIDS + RESINS									
Volume		*0.008 m3*							*0.000 m3*
Density		*1.317*							*1.262*
Total Mass Solids + Resins		**10.743 kg**							**0.598 kg**
Wt% solids	*0.00 wt%*	*20.00 wt%*	*0.00 wt%*	*0.00 wt%*	*0.00 wt%*	*0.00 wt%*	*0.00 wt%*	*0.00 wt%*	*0.27 wt%*
Al(NO3)3									
Al(OH)3		0.004 kg							0.000 kg
Al2O3		0.024 kg							0.000 kg
Fe(NO3)3									
FeOOH		0.109 kg							0.001 kg
C		0.000 kg							0.000 kg
CaO		0.004 kg							0.000 kg
Na2C2O4									
CO2		0.003 kg							
H2O									
SiO2		0.088 kg							0.005 kg
Grout									
Miscellaneous		0.021 kg							0.000 kg
Zircaloy									
Grafoil									
HNO3									
H2C2O4									
Na2U2O7									
U		0.001 kg							0.000 kg
U3O7		0.016 kg							0.000 kg
UH3		0.001 kg							0.000 kg
UO2		0.022 kg							0.000 kg
UO2(NO3)2									
UO4-4H2O		0.001 kg							0.000 kg
Pu		*0.006 Ci*							*0.000 Ci*
Am		*0.008 Ci*							*0.000 Ci*
Cs		*0.097 Ci*							*0.003 Ci*
Sr		*0.091 Ci*							*0.000 Ci*
PCB		*2.057 g*							*0.117 g*
RESINS									
Zeolite		2.527 kg							0.143 kg
OIER		7.922 kg							0.449 kg
Pu		*0.004 Ci*							*0.000 Ci*
Am		*0.003 Ci*							*0.000 Ci*
Cs		*1.141 Ci*							*0.030 Ci*
TOTAL ACTIVITIES									
Total U		0.036 kg							0.033 kg
Total Pu		0.010 Ci							0.009 Ci
Total Am		0.011 Ci							0.008 Ci
TRU		**0.020 Ci**							**0.018 Ci**
Total Cs		1.238 Ci							0.699 Ci
Total Sr		0.091 Ci							0.084 Ci
Beta Gamma		**1.329 Ci**							**0.784 Ci**
CONCENTRATION									
PCB in liquid									
PCB in solids		191.495 ppm							194.860 ppm
Solids		210.11 g/l							2.80 g/l
U		0.001 g/cm3							0.000 g/cm3
Pu total		**0.190 Ci/m3**							**0.043 Ci/m3**
238 Pu		0.038 Ci/m3							0.009 Ci/m3
239 Pu		0.076 Ci/m3							0.017 Ci/m3
240 Pu		0.076 Ci/m3							0.017 Ci/m3
Am		0.209 Ci/m3							0.040 Ci/m3
TRU		0.399 Ci/m3							0.082 Ci/m3
TRU		**380 nCi/g**							**78 nCi/g**
Beta Gamma		**25.988 Ci/m3**							**3.676 Ci/m3**

DETAILED STREAM DATA SHEET FOR ONE DAILY BATCH

STREAM KE1 Nominal Case : 1 Batch 160 kg solids	ST-309 TOTAL SOLIDS LEACHING EFFLUENT	ST-310 LEACHED RESINS	ST-311 LEACHED SOLIDS	ST-401 TOTAL WATER USED FOR RESINS AND SOLIDS WASHING	ST-402 TOTAL SOLUTION FROM CENTRIFUGE	ST-403 RESINS + SOLID RESIDUES FROM LEACHING	ST-404 FINAL DECLOGGING (SOLIDS)	ST-405 FINAL DECLOGGING (RESIN)	ST-407 DISSOLUTION SOLUTION AFTER CENTRIFUGE
Volume	*1.315 m3*	*0.161 m3*	*0.914 m3*	*0.907 m3*	*4.252 m3*	*0.296 m3*	*0.240 m3*	*0.056 m3*	*2.717 m3*
Density	*1.111*	*1.084*	*1.181*	*1.000*	*1.168*	*1.095*	*1.104*	*1.037*	*1.208*
Total Mass	**1,461.441 kg**	**174.699 kg**	**1,080.038 kg**	**906.858 kg**	**4,968.177 kg**	**323.567 kg**	**265.537 kg**	**58.030 kg**	**3,282.006 kg**
Number of packages									
LIQUID									
Volume	*1.315 m3*	*0.153 m3*	*0.894 m3*	*0.907 m3*	*4.251 m3*	*0.268 m3*	*0.220 m3*	*0.048 m3*	*2.716 m3*
Density	*1.111*	*1.074*	*1.158*	*1.000*	*1.168*	*1.000*	*1.002*	*1.000*	*1.207*
Total Mass Liquid + Gaz	**1,461.074 kg**	**164.142 kg**	**1,034.328 kg**	**906.858 kg**	**4,964.794 kg**	**268.035 kg**	**219.964 kg**	**48.071 kg**	**3,279.588 kg**
H2O	1,170.046 kg	141.900 kg	753.000 kg	906.858 kg	3,524.455 kg	267.780 kg	219.734 kg	48.046 kg	2,152.494 kg
HNO3	284.112 kg	20.300 kg	276.500 kg		1,193.991 kg	0.249 kg	0.226 kg	0.023 kg	889.602 kg
H2C2O4		1.500 kg			1.498 kg	0.002 kg		0.002 kg	
HF	4.396 kg		4.400 kg		4.396 kg	0.004 kg	0.004 kg		
NaOH									
Al(NO3)3	0.540 kg	0.098 kg	0.090 kg		51.753 kg	0.000 kg	0.000 kg	0.000 kg	51.115 kg
AlF3									
Fe(NO3)3	1.531 kg	0.267 kg	0.254 kg		146.766 kg	0.001 kg	0.000 kg	0.000 kg	144.968 kg
CaO	0.018 kg	0.003 kg	0.003 kg		1.742 kg	0.000 kg	0.000 kg	0.000 kg	1.721 kg
NaNO2									
NaNO3									
Miscellaneous	0.110 kg	0.019 kg	0.018 kg		10.578 kg	0.000 kg	0.000 kg	0.000 kg	10.448 kg
UO2(NO3)2	0.320 kg	0.055 kg	0.063 kg		29.614 kg	0.000 kg	0.000 kg	0.000 kg	29.239 kg
Pu	*0.054 Ci*	*0.009 Ci*	*0.028 Ci*		*3.005 Ci*	*0.000 Ci*	*0.000 Ci*	*0.000 Ci*	*2.942 Ci*
Am	*0.045 Ci*	*0.008 Ci*	*0.011 Ci*		*3.886 Ci*	*0.000 Ci*	*0.000 Ci*	*0.000 Ci*	*3.833 Ci*
Cs	*0.601 Ci*	*0.668 Ci*	*0.180 Ci*		*49.022 Ci*	*0.001 Ci*	*0.000 Ci*	*0.001 Ci*	*47.754 Ci*
Sr	*0.492 Ci*	*0.084 Ci*	*0.097 Ci*		*45.502 Ci*	*0.000 Ci*	*0.000 Ci*	*0.000 Ci*	*44.925 Ci*
PCB	*0.000 g*		*0.000 g*		*0.035 g*	*0.000 g*	*0.000 g*		*0.035 g*
GAZ									
NO2									
NO									
PCB									
SOLIDS + RESINS									
Volume	*0.000 m3*	*0.008 m3*	*0.021 m3*		*0.002 m3*	*0.028 m3*	*0.021 m3*	*0.008 m3*	*0.001 m3*
Density	*2.184*	*1.262*	*2.183*		*2.022*	*2.018*	*2.183*	*1.262*	*2.185*
Total Mass Solids + Resins	**0.367 kg**	**10.557 kg**	**45.710 kg**		**3.383 kg**	**55.532 kg**	**45.573 kg**	**9.959 kg**	**2.418 kg**
Wt% solids	*0.03 wt%*	*6.04 wt%*	*4.23 wt%*	*0.00 wt%*	*0.07 wt%*	*17.16 wt%*	*17.16 wt%*	*17.16 wt%*	*0.07 wt%*
Al(NO3)3									
Al(OH)3	0.000 kg	0.000 kg	0.017 kg		0.001 kg	0.017 kg	0.017 kg	0.000 kg	0.001 kg
Al2O3	0.004 kg	0.002 kg	0.557 kg		0.034 kg	0.558 kg	0.556 kg	0.002 kg	0.029 kg
Fe(NO3)3									
FeOOH	0.004 kg	0.011 kg	0.514 kg		0.032 kg	0.523 kg	0.512 kg	0.010 kg	0.027 kg
C	0.001 kg	0.000 kg	0.175 kg		0.011 kg	0.175 kg	0.175 kg	0.000 kg	0.009 kg
CaO	0.001 kg	0.001 kg	0.183 kg		0.011 kg	0.183 kg	0.182 kg	0.001 kg	0.010 kg
Na2C2O4									
CO2									
H2O									
SiO2	0.332 kg	0.088 kg	41.378 kg		2.526 kg	41.337 kg	41.254 kg	0.083 kg	2.189 kg
Grout									
Miscellaneous	0.001 kg	0.002 kg	0.101 kg		0.006 kg	0.103 kg	0.101 kg	0.002 kg	0.005 kg
Zircaloy									
Grafoil									
HNO3									
H2C2O4									
Na2U2O7									
U	0.000 kg	0.000 kg	0.000 kg		0.000 kg	0.000 kg	0.000 kg	0.000 kg	0.000 kg
U3O7	0.000 kg	0.001 kg	0.001 kg		0.000 kg	0.002 kg	0.001 kg	0.001 kg	0.000 kg
UH3	0.000 kg	0.000 kg	0.000 kg		0.000 kg	0.000 kg	0.000 kg	0.000 kg	0.000 kg
UO2	0.000 kg	0.002 kg	0.001 kg		0.000 kg	0.002 kg	0.001 kg	0.002 kg	0.000 kg
UO2(NO3)2									
UO4-4H2O	0.000 kg	0.000 kg	0.000 kg		0.000 kg	0.000 kg	0.000 kg	0.000 kg	0.000 kg
Pu	*0.000 Ci*	*0.000 Ci*	*0.001 Ci*		*0.001 Ci*	*0.001 Ci*	*0.001 Ci*	*0.000 Ci*	*0.000 Ci*
Am	*0.000 Ci*	*0.001 Ci*	*0.000 Ci*		*0.000 Ci*	*0.001 Ci*	*0.000 Ci*	*0.001 Ci*	*0.000 Ci*
Cs	*0.001 Ci*	*0.045 Ci*	*0.044 Ci*		*0.011 Ci*	*0.086 Ci*	*0.044 Ci*	*0.043 Ci*	*0.007 Ci*
Sr	*0.000 Ci*	*0.007 Ci*	*0.004 Ci*		*0.002 Ci*	*0.010 Ci*	*0.004 Ci*	*0.006 Ci*	*0.001 Ci*
PCB	*0.065 g*	*2.057 g*	*8.095 g*		*0.610 g*	*10.012 g*	*8.071 g*	*1.941 g*	*0.428 g*
RESINS									
Zeolite	0.019 kg	2.527 kg	2.389 kg		0.289 kg	4.766 kg	2.382 kg	2.384 kg	0.126 kg
OIER	0.003 kg	7.922 kg	0.394 kg		0.473 kg	7.867 kg	0.393 kg	7.474 kg	0.021 kg
Pu	*0.000 Ci*	*0.001 Ci*	*0.003 Ci*		*0.001 Ci*	*0.003 Ci*	*0.003 Ci*	*0.000 Ci*	*0.001 Ci*
Am	*0.000 Ci*	*0.001 Ci*	*0.001 Ci*		*0.000 Ci*	*0.002 Ci*	*0.001 Ci*	*0.001 Ci*	*0.000 Ci*
Cs	*0.000 Ci*	*0.525 Ci*	*0.003 Ci*		*0.030 Ci*	*0.498 Ci*	*0.003 Ci*	*0.495 Ci*	*0.000 Ci*
TOTAL ACTIVITIES									
Total U	0.194 kg	0.036 kg	0.039 kg		17.889 kg	0.004 kg	0.001 kg	0.003 kg	17.662 kg
Total Pu	0.054 Ci	0.010 Ci	0.032 Ci		3.006 Ci	0.004 Ci	0.003 Ci	0.001 Ci	2.943 Ci
Total Am	0.045 Ci	0.011 Ci	0.012 Ci		3.886 Ci	0.003 Ci	0.001 Ci	0.002 Ci	3.833 Ci
TRU	**0.099 Ci**	**0.020 Ci**	**0.044 Ci**		**6.893 Ci**	**0.007 Ci**	**0.004 Ci**	**0.003 Ci**	**6.776 Ci**
Total Cs	0.601 Ci	1.238 Ci	0.227 Ci		49.062 Ci	0.585 Ci	0.046 Ci	0.538 Ci	47.762 Ci
Total Sr	0.492 Ci	0.091 Ci	0.100 Ci		45.503 Ci	0.010 Ci	0.004 Ci	0.007 Ci	44.926 Ci
Beta Gamma	**1.094 Ci**	**1.329 Ci**	**0.327 Ci**		**94.566 Ci**	**0.595 Ci**	**0.050 Ci**	**0.545 Ci**	**92.688 Ci**
CONCENTRATION									
PCB in liquid	0.25 ppb		0.06 ppb		7.08 ppb	0.00 ppb	0.00 ppb		10.61 ppb
PCB in solids	177.080 ppm	194.860 ppm	177.099 ppm		180.214 ppm	180.285 ppm	177.099 ppm	194.860 ppm	177.068 ppm
Solids	0.28 g/l	65.51 g/l	49.99 g/l		0.80 g/l	187.89 g/l	189.52 g/l	177.96 g/l	0.89 g/l
U	0.000 g/cm3	0.000 g/cm3	0.000 g/cm3		0.004 g/cm3	0.000 g/cm3	0.000 g/cm3	0.000 g/cm3	0.006 g/cm3
Pu total	**0.041 Ci/m3**	**0.060 Ci/m3**	**0.035 Ci/m3**		**0.707 Ci/m3**	**0.014 Ci/m3**	**0.014 Ci/m3**	**0.011 Ci/m3**	**1.083 Ci/m3**
238 Pu	0.008 Ci/m3	0.012 Ci/m3	0.007 Ci/m3		0.141 Ci/m3	0.003 Ci/m3	0.003 Ci/m3	0.002 Ci/m3	0.217 Ci/m3
239 Pu	0.016 Ci/m3	0.024 Ci/m3	0.014 Ci/m3		0.283 Ci/m3	0.006 Ci/m3	0.006 Ci/m3	0.004 Ci/m3	0.433 Ci/m3
240 Pu	0.016 Ci/m3	0.024 Ci/m3	0.014 Ci/m3		0.283 Ci/m3	0.006 Ci/m3	0.006 Ci/m3	0.004 Ci/m3	0.433 Ci/m3
Am	0.034 Ci/m3	0.066 Ci/m3	0.013 Ci/m3		0.914 Ci/m3	0.011 Ci/m3	0.003 Ci/m3	0.041 Ci/m3	1.410 Ci/m3
TRU	0.076 Ci/m3	0.127 Ci/m3	0.048 Ci/m3		1.621 Ci/m3	0.024 Ci/m3	0.018 Ci/m3	0.052 Ci/m3	2.494 Ci/m3
TRU	**68 nCi/g**	**117 nCi/g**	**41 nCi/g**		**1 387 nCi/g**	**22 nCi/g**	**16 nCi/g**	**50 nCi/g**	**2 065 nCi/g**
Beta Gamma	**0.832 Ci/m3**	**8.245 Ci/m3**	**0.357 Ci/m3**		**22.239 Ci/m3**	**2.014 Ci/m3**	**0.209 Ci/m3**	**9.739 Ci/m3**	**34.110 Ci/m3**

STREAM KE1 Nominal Case : 1 Batch 160 kg solids	ST-408 TOTAL WATER USED FOR RESIN LEACHING AND WASHING	ST-409 TOTAL WATER FOR SOLIDS LEACHING AND WASHING	ST-410 SOLIDS FROM CENTRIFUGE	ST-501 TOTAL SOLUTION TO FILTRATION	ST-502 FILTER RINSING WATER	ST-503 TOTAL SOLUTION TO ADJUST	ST-504 RINSED FILTER TO CONDITIONING	ST-505 GROUT FORMERS FOR FILTER CONDITIONING	ST-506 CONDITIONED FILTERS
Volume	*0.108 m3*	*0.799 m3*	*0.202 m3*	*4.252 m3*	*0.122 m3*	*4.341 m3*	*0.004 m3*	*0.052 m3*	*0.054 m3*
Density	*1.000*	*1.000*	*1.128*	*1.168*	*1.000*	*1.171*	*1.390*	*2.195*	*2.194*
Total Mass	108.061 kg	798.797 kg	228.436 kg	4,968.177 kg	122.317 kg	5,084.405 kg	6.089 kg	113.431 kg	119.521 kg
Number of packages							0.277		0.277
LIQUID									
Volume	*0.108 m3*	*0.799 m3*	*0.182 m3*	*4.251 m3*	*0.122 m3*	*4.341 m3*	*0.003 m3*		
Density	*1.000*	*1.000*	*1.007*	*1.168*	*1.000*	*1.171*	*1.059*		*1.001*
Total Mass Liquid + Gaz	108.061 kg	798.797 kg	182.718 kg	4,964.794 kg	122.317 kg	5,084.066 kg	3.045 kg		
H2O	108.061 kg	798.797 kg	180.742 kg	3,524.455 kg	122.317 kg	3,644.081 kg	2.691 kg		
HNO3			1.560 kg	1,193.991 kg		1,193.699 kg	0.293 kg		
H2C2O4				1.498 kg		1.498 kg	0.000 kg		
HF				4.396 kg		4.395 kg	0.001 kg		
NaOH									
Al(NO3)3			0.090 kg	51.753 kg		51.740 kg	0.013 kg		
AlF3									
Fe(NO3)3			0.254 kg	146.766 kg		146.730 kg	0.036 kg		
CaO			0.003 kg	1.742 kg		1.742 kg	0.000 kg		
NaNO2									
NaNO3									
Miscellaneous			0.018 kg	10.578 kg		10.575 kg	0.003 kg		
UO2(NO3)2			0.051 kg	29.614 kg		29.607 kg	0.007 kg		
Pu			*0.005 Ci*	*3.005 Ci*		*3.004 Ci*	*0.001 Ci*		
Am			*0.007 Ci*	*3.886 Ci*		*3.885 Ci*	*0.001 Ci*		
Cs			*0.084 Ci*	*49.022 Ci*		*49.010 Ci*	*0.012 Ci*		
Sr			*0.079 Ci*	*45.502 Ci*		*45.491 Ci*	*0.011 Ci*		
PCB			*0.000 g*	*0.035 g*		*0.002 g*	*0.000 g*		
GAZ									
NO2									
NO									
PCB									
SOLIDS + RESINS									
Volume			*0.021 m3*	*0.002 m3*		*0.000 m3*	*0.002 m3*	*0.052 m3*	*0.054 m3*
Density			*2.185*	*2.022*		*2.022*	*2.022*	*2.195*	*2.194*
Total Mass Solids + Resins			45.718 kg	3.383 kg		0.338 kg	3.045 kg	113.431 kg	119.521 kg
Wt% solids	*0.00 wt%*	*0.00 wt%*	*20.01 wt%*	*0.07 wt%*	*0.00 wt%*	*0.01 wt%*	*50.00 wt%*	*100.00 wt%*	*100.00 wt%*
Al(NO3)3									0.013 kg
Al(OH)3			0.017 kg	0.001 kg		0.000 kg	0.001 kg		0.001 kg
Al2O3			0.557 kg	0.034 kg		0.003 kg	0.031 kg		0.031 kg
Fe(NO3)3									0.036 kg
FeOOH			0.514 kg	0.032 kg		0.003 kg	0.029 kg		0.029 kg
C			0.175 kg	0.011 kg		0.001 kg	0.010 kg		0.010 kg
CaO			0.183 kg	0.011 kg		0.001 kg	0.010 kg		0.010 kg
Na2C2O4									
CO2									
H2O								16.600 kg	16.600 kg
SiO2			41.378 kg	2.526 kg		0.253 kg	2.273 kg		2.273 kg
Grout								96.832 kg	99.523 kg
Miscellaneous			0.101 kg	0.006 kg		0.001 kg	0.006 kg		0.009 kg
Zircaloy									
Grafoil									
HNO3									0.293 kg
H2C2O4									0.000 kg
Na2U2O7									
U			0.000 kg	0.000 kg		0.000 kg	0.000 kg		0.000 kg
U3O7			0.004 kg	0.000 kg		0.000 kg	0.000 kg		0.000 kg
UH3			0.000 kg	0.000 kg		0.000 kg	0.000 kg		0.000 kg
UO2			0.005 kg	0.000 kg		0.000 kg	0.000 kg		0.000 kg
UO2(NO3)2									0.007 kg
UO4-4H2O			0.000 kg	0.000 kg		0.000 kg	0.000 kg		0.000 kg
Pu			*0.009 Ci*	*0.001 Ci*		*0.000 Ci*	*0.000 Ci*		*0.001 Ci*
Am			*0.004 Ci*	*0.000 Ci*		*0.000 Ci*	*0.000 Ci*		*0.001 Ci*
Cs			*0.137 Ci*	*0.011 Ci*		*0.001 Ci*	*0.010 Ci*		*0.022 Ci*
Sr			*0.021 Ci*	*0.002 Ci*		*0.000 Ci*	*0.001 Ci*		*0.013 Ci*
PCB			*8.095 g*	*0.610 g*		*0.061 g*	*0.582 g*		*0.582 g*
RESINS									
Zeolite			2.389 kg	0.289 kg		0.029 kg	0.260 kg		0.260 kg
OIER			0.394 kg	0.473 kg		0.047 kg	0.425 kg		0.425 kg
Pu			*0.018 Ci*	*0.001 Ci*		*0.000 Ci*	*0.001 Ci*		*0.001 Ci*
Am			*0.002 Ci*	*0.000 Ci*		*0.000 Ci*	*0.000 Ci*		*0.000 Ci*
Cs			*0.006 Ci*	*0.030 Ci*		*0.003 Ci*	*0.027 Ci*		*0.027 Ci*
TOTAL ACTIVITIES									
Total U			0.039 kg	17.889 kg		17.884 kg	0.005 kg		0.005 kg
Total Pu			0.032 Ci	3.006 Ci		3.004 Ci	0.002 Ci		0.002 Ci
Total Am			0.012 Ci	3.886 Ci		3.885 Ci	0.001 Ci		0.001 Ci
TRU			0.044 Ci	6.893 Ci		6.889 Ci	0.004 Ci		0.004 Ci
Total Cs			0.227 Ci	49.062 Ci		49.014 Ci	0.049 Ci		0.049 Ci
Total Sr			0.100 Ci	45.503 Ci		45.491 Ci	0.013 Ci		0.013 Ci
Beta Gamma			0.327 Ci	94.566 Ci		94.504 Ci	0.061 Ci		0.061 Ci
CONCENTRATION									
PCB in liquid			0.33 ppb	7.08 ppb		0.35 ppb	2.83 ppb		
PCB in solids			177.068 ppm	180.214 ppm		180.214 ppm	191.177 ppm		4.870 ppm
Solids			225.83 g/l	0.80 g/l		0.08 g/l	695.04 g/l		2193.55 g/l
U			0.000 g/cm3	0.004 g/cm3		0.004 g/cm3	0.001 g/cm3		0.000 g/cm3
Pu total			0.156 Ci/m3	0.707 Ci/m3		0.692 Ci/m3	0.492 Ci/m3		0.040 Ci/m3
238 Pu			0.031 Ci/m3	0.141 Ci/m3		0.138 Ci/m3	0.098 Ci/m3		0.008 Ci/m3
239 Pu			0.062 Ci/m3	0.283 Ci/m3		0.277 Ci/m3	0.197 Ci/m3		0.016 Ci/m3
240 Pu			0.062 Ci/m3	0.283 Ci/m3		0.277 Ci/m3	0.197 Ci/m3		0.016 Ci/m3
Am			0.060 Ci/m3	0.914 Ci/m3		0.895 Ci/m3	0.311 Ci/m3		0.025 Ci/m3
TRU			0.216 Ci/m3	1.621 Ci/m3		1.587 Ci/m3	0.804 Ci/m3		0.065 Ci/m3
TRU			192 nCi/g	1 387 nCi/g		1 355 nCi/g	578 nCi/g		29 nCi/g
Beta Gamma			1.614 Ci/m3	22.239 Ci/m3		21.769 Ci/m3	13.991 Ci/m3		1.125 Ci/m3

STREAM KE1 Nominal Case : 1 Batch 160 kg solids	ST-601 SOLUTION BEFORE NEUTRALIZATION	ST-602 UO2(NO3)2 ADDITION SOLUTION	ST-603 FE(NO3)3 / AL(NO3)3 ADDITION SOLUTION	ST-604 FINAL SOLUTION SENT TO TWRS	ST-605 NANO2 ADDITION SOLUTION	ST-607 NAOH ADDITION SOLUTION	ST-608 WATER ADJUSTMENT	ST-701 RESINS + SOLID SOLUTION AFTER DECANTATION	ST-702 SUPERNATE TO ELIMINATE
Volume	*4.344 m3*	*0.002 m3*		*6.607 m3*	*0.820 m3*	*1.250 m3*			
Density	*1.171*	*1.323*		*1.191*	*1.251*	*1.403*			
Total Mass	5,087.655 kg	3.250 kg		7,867.102 kg	1,026.250 kg	1,753.197 kg			
Number of packages									
LIQUID									
Volume	*4.344 m3*	*0.002 m3*		*6.573 m3*	*0.820 m3*	*1.250 m3*			
Density	*1.171*	*1.323*	*1.328*	*1.182*	*1.251*	*1.403*	*1.000*	*1.000*	*1.000*
Total Mass Liquid + Gaz	5,087.317 kg	3.250 kg		7,772.796 kg	1,026.250 kg	1,753.197 kg			
H2O	3,646.363 kg	2.282 kg		5,424.238 kg	615.750 kg	803.497 kg			
HNO3	1,193.699 kg								
H2C2O4	1.498 kg								
HF	4.395 kg								
NaOH				79.200 kg		949.701 kg			
Al(NO3)3	51.740 kg								
AlF3				6.153 kg					
Fe(NO3)3	146.730 kg								
CaO	1.742 kg			1.742 kg					
NaNO2				410.500 kg	410.500 kg				
NaNO3				1,840.388 kg					
Miscellaneous	10.575 kg			10.575 kg					
UO2(NO3)2	30.575 kg	0.968 kg							
Pu	*3.004 Ci*								
Am	*3.885 Ci*								
Cs	*49.010 Ci*			*49.010 Ci*					
Sr	*45.491 Ci*								
PCB	*0.002 g*			*0.000 g*					
GAZ									
NO2									
NO									
PCB									
SOLIDS + RESINS									
Volume	*0.000 m3*			*0.034 m3*					
Density	*2.022*			*2.769*					
Total Mass Solids + Resins	0.338 kg			94.306 kg					
Wt% solids	*0.01 wt%*	*0.00 wt%*	*0.00 wt%*	*1.20 wt%*	*0.00 wt%*	*0.00 wt%*	*0.00 wt%*	*0.00 wt%*	*0.00 wt%*
Al(NO3)3									
Al(OH)3	0.000 kg			13.233 kg					
Al2O3	0.003 kg			0.003 kg					
Fe(NO3)3									
FeOOH	0.003 kg			53.908 kg					
C	0.001 kg			0.001 kg					
CaO	0.001 kg			0.001 kg					
Na2C2O4				2.230 kg					
CO2									
H2O									
SiO2	0.253 kg			0.253 kg					
Grout									
Miscellaneous	0.001 kg			0.001 kg					
Zircaloy									
Grafoil									
HNO3									
H2C2O4									
Na2U2O7				24.599 kg					
U	0.000 kg			0.000 kg					
U3O7	0.000 kg			0.000 kg					
UH3	0.000 kg			0.000 kg					
UO2	0.000 kg			0.000 kg					
UO2(NO3)2									
UO4-4H2O	0.000 kg			0.000 kg					
Pu	*0.000 Ci*			*3.004 Ci*					
Am	*0.000 Ci*			*3.885 Ci*					
Cs	*0.001 Ci*			*0.001 Ci*					
Sr	*0.000 Ci*			*45.491 Ci*					
PCB	*0.061 g*			*0.063 g*					
RESINS									
Zeolite	0.029 kg			0.029 kg					
OIER	0.047 kg			0.047 kg					
Pu	*0.000 Ci*			*0.000 Ci*					
Am	*0.000 Ci*			*0.000 Ci*					
Cs	*0.003 Ci*			*0.003 Ci*					
TOTAL ACTIVITIES									
Total U	18.469 kg	0.585 kg		18.469 kg					
Total Pu	3.004 Ci			3.004 Ci					
Total Am	3.885 Ci			3.885 Ci					
TRU	6.889 Ci			6.889 Ci					
Total Cs	49.014 Ci			49.014 Ci					
Total Sr	45.491 Ci			45.491 Ci					
Beta Gamma	94.504 Ci			94.504 Ci					
CONCENTRATION									
PCB in liquid	0.35 ppb			0.01 ppb					
PCB in solids	180.214 ppm			0.664 ppm					
Solids	0.06 g/l			14.27 g/l					
U	0.004 g/cm3	0.238 g/cm3		0.003 g/cm3					
Pu total	0.692 Ci/m3			0.455 Ci/m3					
238 Pu	0.138 Ci/m3			0.091 Ci/m3					
239 Pu	0.277 Ci/m3			0.182 Ci/m3					
240 Pu	0.277 Ci/m3			0.182 Ci/m3					
Am	0.894 Ci/m3			0.588 Ci/m3					
TRU	1.586 Ci/m3			1.043 Ci/m3					
TRU	1 354 nCi/g			876 nCi/g					
Beta Gamma	21.755 Ci/m3			14.303 Ci/m3					

DETAILED STREAM DATA SHEET FOR ONE DAILY BATCH

STREAM KE1 Nominal Case : 1 Batch 160 kg solids	ST-703 GROUT FORMERS	ST-704 FINAL GROUT WASTES TO ERDF	ST-801 ADDED WATER TO OFF-GAS TREATMENT
Volume			*0.013 m3*
Density			*1.000*
Total Mass			12.811 kg
Number of packages			
LIQUID			
Volume			*0.013 m3*
Density			*1.000*
Total Mass Liquid + Gaz			12.811 kg
H2O			12.811 kg
HNO3			
H2C2O4			
HF			
NaOH			
Al(NO3)3			
AlF3			
Fe(NO3)3			
CaO			
NaNO2			
NaNO3			
Miscellaneous			
UO2(NO3)2			
Pu			
Am			
Cs			
Sr			
PCB			
GAZ			
NO2			
NO			
PCB			
SOLIDS + RESINS			
Volume			
Density			
Total Mass Solids + Resins			
Wt% solids	*0.00 wt%*	*0.00 wt%*	*0.00 wt%*
Al(NO3)3			
Al(OH)3			
Al2O3			
Fe(NO3)3			
FeOOH			
C			
CaO			
Na2C2O4			
CO2			
H2O			
SiO2			
Grout			
Miscellaneous			
Zircaloy			
Grafoil			
HNO3			
H2C2O4			
Na2U2O7			
U			
U3O7			
UH3			
UO2			
UO2(NO3)2			
UO4-4H2O			
Pu			
Am			
Cs			
Sr			
PCB			
RESINS			
Zeolite			
OIER			
Pu			
Am			
Cs			
TOTAL ACTIVITIES			
Total U			
Total Pu			
Total Am			
TRU			
Total Cs			
Total Sr			
Beta Gamma			
CONCENTRATION			
PCB in liquid			
PCB in solids			
Solids			
U			
Pu total			
238 Pu			
239 Pu			
240 Pu			
Am			
TRU			
TRU			
Beta Gamma			

DETAILED STREAM DATA SHEET FOR THE WHOLE STREAM

STREAM KE1 Nominal Case - TOTAL STREAM	ST-101 SLUDGE AT INLET OF TREATMENT UNIT	ST-102 WATER ADDITION FOR SCREEN WASHING	ST-103 SLUDGE STREAM FROM RESIN SEPARATION	ST-104 RESIN STREAM FROM RESIN SEPARATION	ST-201 SLUDGE TO DISSOLVER	ST-202 RECYCLED NITRIC ACID	ST-203 HNO3 FOR DISSOLUTION	ST-204 DISSOLUTION OFF-GAS	ST-205 DISSOLUTION SOLUTION
Volume	*178.053 m3*	*6.280 m3*	*177.345 m3*	*7.472 m3*	*177.345 m3*	*2.506 m3*	*187.817 m3*	*329.969 m3*	*347.423 m3*
Density	*1.094*	*1.000*	*1.090*	*1.051*	*1.090*	*1.125*	*1.278*	*0.002*	*1.253*
Total Mass	**194,851.772 kg**	**6,279.843 kg**	**193,281.811 kg**	**7,849.804 kg**	**193,281.811 kg**	**2,819.640 kg**	**240,030.436 kg**	**647.102 kg**	**435,286.900 kg**
Number of packages									
LIQUID									
Volume	*171.470 m3*	*6.280 m3*	*171.470 m3*	*6.280 m3*	*171.470 m3*	*2.506 m3*	*187.817 m3*	*329.969 m3*	*344.188 m3*
Density	*1.000*	*1.000*	*1.000*	*1.000*	*1.000*	*1.125*	*1.278*	*0.002*	*1.244*
Total Mass Liquid + Gaz	**171,469.559 kg**	**6,279.843 kg**	**171,469.559 kg**	**6,279.843 kg**	**171,469.559 kg**	**2,819.640 kg**	**240,030.436 kg**	**647.102 kg**	**428,218.794 kg**
H2O	171,469.559 kg	6,279.843 kg	171,469.559 kg	6,279.843 kg	171,469.559 kg	1,872.241 kg	83,841.617 kg		261,766.683 kg
HNO3						947.399 kg	156,188.819 kg		131,378.807 kg
H2C2O4									
HF									
NaOH									
Al(NO3)3									7,548.862 kg
AlF3									
Fe(NO3)3									21,409.257 kg
CaO									254.115 kg
NaNO2									
NaNO3									
Miscellaneous									1,543.010 kg
UO2(NO3)2									4,318.060 kg
Pu									*434.413 Ci*
Am									*565.996 Ci*
Cs									*7,052.440 Ci*
Sr									*6,634.683 Ci*
PCB									*5.138 g*
GAZ									
NO2								563.385 kg	
NO								83.717 kg	
PCB								*834.359 g*	
SOLIDS + RESINS									
Volume	*6.584 m3*		*5.876 m3*	*1.192 m3*	*5.876 m3*				*3.235 m3*
Density	*3.551*		*3.712*	*1.317*	*3.712*				*2.185*
Total Mass Solids + Resins	**23,382.213 kg**		**21,812.252 kg**	**1,569.961 kg**	**21,812.252 kg**				**7,068.106 kg**
Wt% solids	*12.00 wt%*	*0.00 wt%*	*11.29 wt%*	*20.00 wt%*	*11.29 wt%*	*0.00 wt%*	*0.00 wt%*	*0.00 wt%*	*1.62 wt%*
Al(NO3)3									
Al(OH)3	263.596 kg		263.069 kg	0.527 kg	263.069 kg				2.631 kg
Al2O3	1,726.809 kg		1,723.355 kg	3.454 kg	1,723.355 kg				86.168 kg
Fe(NO3)3									
FeOOH	7,960.626 kg		7,944.704 kg	15.921 kg	7,944.704 kg				79.447 kg
C	27.156 kg		27.101 kg	0.054 kg	27.101 kg				27.101 kg
CaO	282.916 kg		282.350 kg	0.566 kg	282.350 kg				28.235 kg
Na2C2O4									
CO2	207.129 kg		206.715 kg	0.414 kg	206.715 kg				
H2O									
SiO2	6,409.976 kg		6,397.156 kg	12.820 kg	6,397.156 kg				6,397.156 kg
Grout									
Miscellaneous	1,561.719 kg		1,558.596 kg	3.123 kg	1,558.596 kg				15.586 kg
Zircaloy									
Grafoil									
HNO3									
H2C2O4									
Na2U2O7									
U	48.341 kg		48.245 kg	0.097 kg	48.245 kg				0.024 kg
U3O7	1,190.329 kg		1,187.949 kg	2.381 kg	1,187.949 kg				0.594 kg
UH3	79.601 kg		79.442 kg	0.159 kg	79.442 kg				0.040 kg
UO2	1,625.566 kg		1,622.315 kg	3.251 kg	1,622.315 kg				0.811 kg
UO2(NO3)2									
UO4-4H2O	41.044 kg		40.962 kg	0.082 kg	40.962 kg				0.020 kg
Pu	*439.352 Ci*		*438.473 Ci*	*0.879 Ci*	*438.473 Ci*				*1.315 Ci*
Am	*567.954 Ci*		*566.818 Ci*	*1.136 Ci*	*566.818 Ci*				*0.567 Ci*
Cs	*7,079.900 Ci*		*7,065.740 Ci*	*14.160 Ci*	*7,065.740 Ci*				*21.197 Ci*
Sr	*6,651.304 Ci*		*6,638.002 Ci*	*13.303 Ci*	*6,638.002 Ci*				*3.319 Ci*
PCB	*4,477.572 g*		*4,176.933 g*	*300.639 g*	*4,176.933 g*				*1,251.539 g*
RESINS									
Zeolite	738.716 kg		369.358 kg	369.358 kg	369.358 kg				369.358 kg
OIER	1,218.687 kg		60.934 kg	1,157.753 kg	60.934 kg				60.934 kg
Pu	*0.566 Ci*		*0.028 Ci*	*0.538 Ci*	*0.028 Ci*				*2.773 Ci*
Am	*0.451 Ci*		*0.023 Ci*	*0.428 Ci*	*0.023 Ci*				*0.278 Ci*
Cs	*175.491 Ci*		*8.775 Ci*	*166.716 Ci*	*8.775 Ci*				*0.877 Ci*
TOTAL ACTIVITIES									
Total U	2,614.906 kg		2,609.676 kg	5.230 kg	2,609.676 kg				2,609.676 kg
Total Pu	439.918 Ci		438.501 Ci	1.417 Ci	438.501 Ci				438.501 Ci
Total Am	568.405 Ci		566.841 Ci	1.564 Ci	566.841 Ci				566.841 Ci
TRU	**1 008.323 Ci**		**1 005.342 Ci**	**2.981 Ci**	**1 005.342 Ci**				**1 005.342 Ci**
Total Cs	7 255.391 Ci		7 074.515 Ci	180.876 Ci	7 074.515 Ci				7 074.515 Ci
Total Sr	6 651.304 Ci		6 638.002 Ci	13.303 Ci	6 638.002 Ci				6 638.002 Ci
Beta Gamma	**13 906.695 Ci**		**13 712.517 Ci**	**194.179 Ci**	**13 712.517 Ci**				**13 712.517 Ci**
CONCENTRATION									
PCB in liquid									12.00 ppb
PCB in solids	191.495 ppm		191.495 ppm	191.495 ppm	191.495 ppm				177.068 ppm
Solids	131.32 g/l		122.99 g/l	210.11 g/l	2.47 g/l				20.34 g/l
U	0.015 g/cm3		0.015 g/cm3	0.001 g/cm3	0.015 g/cm3				0.008 g/cm3
Pu total	**2.471 Ci/m3**		**2.473 Ci/m3**	**0.190 Ci/m3**	**2.473 Ci/m3**				**1.262 Ci/m3**
238 Pu	0.494 Ci/m3		0.495 Ci/m3	0.038 Ci/m3	0.495 Ci/m3				0.252 Ci/m3
239 Pu	0.988 Ci/m3		0.989 Ci/m3	0.076 Ci/m3	0.989 Ci/m3				0.505 Ci/m3
240 Pu	0.988 Ci/m3		0.989 Ci/m3	0.076 Ci/m3	0.989 Ci/m3				0.505 Ci/m3
Am	3.192 Ci/m3		3.196 Ci/m3	0.209 Ci/m3	3.196 Ci/m3				1.632 Ci/m3
TRU	5.663 Ci/m3		5.669 Ci/m3	0.399 Ci/m3	5.669 Ci/m3				2.894 Ci/m3
TRU	**5 175 nCi/g**		**5 201 nCi/g**	**380 nCi/g**	**5 201 nCi/g**				**2 310 nCi/g**
Beta Gamma	**78.104 Ci/m3**		**77.321 Ci/m3**	**25.988 Ci/m3**	**77.321 Ci/m3**				**39.469 Ci/m3**

DETAILED STREAM DATA SHEET FOR THE WHOLE STREAM

STREAM KE1 Nominal Case - TOTAL STREAM	ST-206 DISSOLVER WASHING WATER	ST-301 RESIN STREAM TO LEACHING	ST-302 TOTAL REAGENTS FOR RESINS AND SOLIDS LEACHING	ST-303 TOTAL OXALIC USED FOR RESIN LEACHING AND WASHING	ST-304 TOTAL HF USED FOR SOLIDS LEACHING AND WASHING	ST-305 TOTAL HNO3 USED FOR RESINS AND SOLIDS LEACHING	ST-306 TOTAL HNO3 USED FOR RESIN LEACHING AND WASHING	ST-307 TOTAL HNO3 USED FOR SOLIDS LEACHING AND WASHING	ST-308 TOTAL CLARIFIED SOLUTION FROM RESIN LEACHING
Volume	*55.533 m3*	*7.472 m3*	*122.134 m3*	*11.864 m3*	*58.329 m3*	*51.941 m3*	*3.624 m3*	*48.317 m3*	*31.156 m3*
Density	*1.000*	*1.051*	*1.164*	*1.100*	*1.075*	*1.278*	*1.278*	*1.278*	*1.054*
Total Mass	55,532.755 kg	7,849.804 kg	142,134.449 kg	13,050.086 kg	62,703.295 kg	66,381.068 kg	4,632.036 kg	61,749.031 kg	32,841.758 kg
Number of packages									
LIQUID									
Volume	*55.533 m3*	*6.280 m3*	*122.134 m3*	*11.864 m3*	*58.329 m3*	*51.941 m3*	*3.624 m3*	*48.317 m3*	*31.086 m3*
Density	*1.000*	*1.000*	*1.164*	*1.100*	*1.075*	*1.278*	*1.278*	*1.278*	*1.054*
Total Mass Liquid + Gaz	55,532.755 kg	6,279.843 kg	142,134.449 kg	13,050.086 kg	62,703.295 kg	66,381.068 kg	4,632.036 kg	61,749.031 kg	32,754.372 kg
H2O	55,532.755 kg	6,279.843 kg	98,077.789 kg	12,830.878 kg	62,060.285 kg	23,186.626 kg	1,617.951 kg	21,568.676 kg	29,507.651 kg
HNO3			43,194.441 kg			43,194.441 kg	3,014.086 kg	40,180.356 kg	2,963.279 kg
H2C2O4			219.208 kg	219.208 kg					218.962 kg
HF			643.011 kg		643.011 kg				
NaOH									
Al(NO3)3									14.261 kg
AlF3									
Fe(NO3)3									38.960 kg
CaO									0.452 kg
NaNO2									
NaNO3									
Miscellaneous									2.808 kg
UO2(NO3)2									7.999 kg
Pu									*1.322 Ci*
Am									*1.212 Ci*
Cs									*97.464 Ci*
Sr									*12.291 Ci*
PCB									
GAZ									
NO2									
NO									
PCB									
SOLIDS + RESINS									
Volume		*1.192 m3*							*0.069 m3*
Density		*1.317*							*1.262*
Total Mass Solids + Resins		1,569.961 kg							87.386 kg
Wt% solids	*0.00 wt%*	*20.00 wt%*	*0.00 wt%*	*0.00 wt%*	*0.00 wt%*	*0.00 wt%*	*0.00 wt%*	*0.00 wt%*	*0.27 wt%*
Al(NO3)3									
Al(OH)3		0.527 kg							0.003 kg
Al2O3		3.454 kg							0.020 kg
Fe(NO3)3									
FeOOH		15.921 kg							0.090 kg
C		0.054 kg							0.003 kg
CaO		0.566 kg							0.006 kg
Na2C2O4									
CO2		0.414 kg							
H2O									
SiO2		12.820 kg							0.726 kg
Grout									
Miscellaneous		3.123 kg							0.018 kg
Zircaloy									
Grafoil									
HNO3									
H2C2O4									
Na2U2O7									
U		0.097 kg							0.000 kg
U3O7		2.381 kg							0.010 kg
UH3		0.159 kg							0.001 kg
UO2		3.251 kg							0.014 kg
UO2(NO3)2									
UO4-4H2O		0.082 kg							0.000 kg
Pu		*0.879 Ci*							*0.001 Ci*
Am		*1.136 Ci*							*0.011 Ci*
Cs		*14.160 Ci*							*0.375 Ci*
Sr		*13.303 Ci*							*0.057 Ci*
PCB		*300.639 g*							*17.028 g*
RESINS									
Zeolite		369.358 kg							20.920 kg
OIER		1,157.753 kg							65.575 kg
Pu		*0.538 Ci*							*0.004 Ci*
Am		*0.428 Ci*							*0.009 Ci*
Cs		*166.716 Ci*							*4.344 Ci*
TOTAL ACTIVITIES									
Total U		5.230 kg							4.854 kg
Total Pu		1.417 Ci							1.328 Ci
Total Am		1.564 Ci							1.232 Ci
TRU		2.981 Ci							2.560 Ci
Total Cs		180.876 Ci							102.182 Ci
Total Sr		13.303 Ci							12.348 Ci
Beta Gamma		194.179 Ci							114.530 Ci
CONCENTRATION									
PCB in liquid									
PCB in solids		191.495 ppm							194.860 ppm
Solids		210.11 g/l							2.80 g/l
U		0.001 g/cm3							0.000 g/cm3
Pu total		0.190 Ci/m3							0.043 Ci/m3
238 Pu		0.038 Ci/m3							0.009 Ci/m3
239 Pu		0.076 Ci/m3							0.017 Ci/m3
240 Pu		0.076 Ci/m3							0.017 Ci/m3
Am		0.209 Ci/m3							0.040 Ci/m3
TRU		0.399 Ci/m3							0.082 Ci/m3
TRU		380 nCi/g							78 nCi/g
Beta Gamma		25,988 Ci/m3							3,676 Ci/m3

DETAILED STREAM DATA SHEET FOR THE WHOLE STREAM

STREAM KE1 Nominal Case - TOTAL STREAM	ST-309 TOTAL SOLIDS LEACHING EFFLUENT	ST-310 LEACHED RESINS	ST-311 LEACHED SOLIDS	ST-401 TOTAL WATER USED FOR RESINS AND SOLIDS WASHING	ST-402 TOTAL SOLUTION FROM CENTRIFUGE	ST-403 RESINS + SOLID RESIDUES FROM LEACHING	ST-404 FINAL DECLOGGING (SOLIDS)	ST-405 FINAL DECLOGGING (RESIN)	ST-407 DISSOLUTION SOLUTION AFTER CENTRIFUGE
Volume	*192.215 m3*	*23.550 m3*	*133.637 m3*	*132.527 m3*	*621.427 m3*	*43.192 m3*	*35.140 m3*	*8.179 m3*	*397.109 m3*
Density	*1.111*	*1.084*	*1.181*	*1.000*	*1.168*	*1.095*	*1.104*	*1.037*	*1.208*
Total Mass	213,573.266 kg	25,530.329 kg	157,835.441 kg	132,527.190 kg	726,043.511 kg	47,285.738 kg	38,805.243 kg	8,480.495 kg	479,628.487 kg
Number of packages									
LIQUID									
Volume	*192.190 m3*	*22.327 m3*	*130.577 m3*	*132.527 m3*	*621.182 m3*	*39.170 m3*	*32.090 m3*	*7.025 m3*	*396.948 m3*
Density	*1.111*	*1.074*	*1.158*	*1.000*	*1.168*	*1.000*	*1.002*	*1.000*	*1.207*
Total Mass Liquid + Gaz	213,519.673 kg	23,987.480 kg	151,155.483 kg	132,527.190 kg	725,549.127 kg	39,170.337 kg	32,145.304 kg	7,025.033 kg	479,275.082 kg
H2O	170,989.087 kg	20,737.100 kg	110,042.538 kg	132,527.190 kg	515,059.748 kg	39,133.077 kg	32,111.703 kg	7,021.375 kg	314,563.010 kg
HNO3	41,519.811 kg	2,966.618 kg	40,407.386 kg		174,488.504 kg	36.364 kg	33.025 kg	3.339 kg	130,005.414 kg
H2C2O4		219.208 kg			218.962 kg	0.247 kg		0.247 kg	
HF	642.485 kg		643.011 kg		642.485 kg	0.526 kg	0.526 kg		
NaOH									
Al(NO3)3	78.903 kg	14.277 kg	13.097 kg		7,563.113 kg	0.027 kg	0.011 kg	0.016 kg	7,469.949 kg
AlF3									
Fe(NO3)3	223.775 kg	39.004 kg	37.145 kg		21,448.186 kg	0.074 kg	0.030 kg	0.044 kg	21,185.451 kg
CaO	2.656 kg	0.453 kg	0.441 kg		254.567 kg	0.001 kg	0.000 kg	0.001 kg	251.459 kg
NaNO2									
NaNO3									
Miscellaneous	16.128 kg	2.811 kg	2.677 kg		1,545.815 kg	0.005 kg	0.002 kg	0.003 kg	1,526.880 kg
UO2(NO3)2	46.827 kg	8.008 kg	9.187 kg		4,327.746 kg	0.017 kg	0.008 kg	0.009 kg	4,272.920 kg
Pu	*7.899 Ci*	*1.324 Ci*	*4.115 Ci*		*439.093 Ci*	*0.005 Ci*	*0.003 Ci*	*0.001 Ci*	*429.872 Ci*
Am	*6.592 Ci*	*1.214 Ci*	*1.659 Ci*		*567.884 Ci*	*0.003 Ci*	*0.001 Ci*	*0.001 Ci*	*560.079 Ci*
Cs	*87.775 Ci*	*97.574 Ci*	*26.309 Ci*		*7,163.956 Ci*	*0.131 Ci*	*0.022 Ci*	*0.110 Ci*	*6,978.716 Ci*
Sr	*71.949 Ci*	*12.305 Ci*	*14.115 Ci*		*6,649.566 Ci*	*0.025 Ci*	*0.012 Ci*	*0.014 Ci*	*6,565.326 Ci*
PCB	*0.054 g*		*0.009 g*		*5.138 g*	*0.000 g*	*0.000 g*		*5.084 g*
GAZ									
NO2									
NO									
PCB									
SOLIDS + RESINS									
Volume	*0.025 m3*	*1.223 m3*	*3.059 m3*		*0.245 m3*	*4.021 m3*	*3.050 m3*	*1.154 m3*	*0.162 m3*
Density	*2.184*	*1.262*	*2.183*		*2.022*	*2.018*	*2.183*	*1.262*	*2.185*
Total Mass Solids + Resins	53.593 kg	1,542.849 kg	6,679.959 kg		494.385 kg	8,115.401 kg	6,659.939 kg	1,455.463 kg	353.405 kg
Wt% solids	*0.03 wt%*	*6.04 wt%*	*4.23 wt%*	*0.00 wt%*	*0.07 wt%*	*17.16 wt%*	*17.16 wt%*	*17.16 wt%*	*0.07 wt%*
Al(NO3)3									
Al(OH)3	0.020 kg	0.053 kg	2.487 kg		0.154 kg	2.529 kg	2.479 kg	0.050 kg	0.132 kg
Al2O3	0.653 kg	0.345 kg	81.450 kg		4.981 kg	81.532 kg	81.206 kg	0.326 kg	4.308 kg
Fe(NO3)3									
FeOOH	0.602 kg	1.592 kg	75.097 kg		4.665 kg	76.374 kg	74.872 kg	1.502 kg	3.972 kg
C	0.206 kg	0.054 kg	25.618 kg		1.564 kg	25.592 kg	25.541 kg	0.051 kg	1.355 kg
CaO	0.214 kg	0.113 kg	26.689 kg		1.632 kg	26.716 kg	26.609 kg	0.107 kg	1.412 kg
Na2C2O4									
CO2									
H2O									
SiO2	48.509 kg	12.820 kg	6,046.912 kg		369.093 kg	6,040.883 kg	6,028.789 kg	12.094 kg	319.858 kg
Grout									
Miscellaneous	0.118 kg	0.312 kg	14.733 kg		0.915 kg	14.983 kg	14.688 kg	0.295 kg	0.779 kg
Zircaloy									
Grafoil									
HNO3									
H2C2O4									
Na2U2O7									
U	0.000 kg	0.007 kg	0.004 kg		0.002 kg	0.011 kg	0.004 kg	0.007 kg	0.001 kg
U3O7	0.003 kg	0.179 kg	0.095 kg		0.043 kg	0.264 kg	0.095 kg	0.168 kg	0.030 kg
UH3	0.000 kg	0.012 kg	0.006 kg		0.003 kg	0.018 kg	0.006 kg	0.011 kg	0.002 kg
UO2	0.004 kg	0.244 kg	0.130 kg		0.059 kg	0.360 kg	0.130 kg	0.230 kg	0.041 kg
UO2(NO3)2									
UO4-4H2O	0.000 kg	0.006 kg	0.003 kg		0.001 kg	0.009 kg	0.003 kg	0.006 kg	0.001 kg
Pu	*0.007 Ci*	*0.018 Ci*	*0.137 Ci*		*0.073 Ci*	*0.153 Ci*	*0.136 Ci*	*0.017 Ci*	*0.066 Ci*
Am	*0.003 Ci*	*0.197 Ci*	*0.027 Ci*		*0.042 Ci*	*0.212 Ci*	*0.027 Ci*	*0.185 Ci*	*0.028 Ci*
Cs	*0.120 Ci*	*6.613 Ci*	*6.412 Ci*		*1.554 Ci*	*12.631 Ci*	*6.393 Ci*	*6.238 Ci*	*1.060 Ci*
Sr	*0.017 Ci*	*0.998 Ci*	*0.533 Ci*		*0.240 Ci*	*1.473 Ci*	*0.532 Ci*	*0.941 Ci*	*0.166 Ci*
PCB	*9.490 g*	*300.639 g*	*1,183.017 g*		*89.095 g*	*1,463.083 g*	*1,179.471 g*	*283.611 g*	*62.577 g*
RESINS									
Zeolite	2.801 kg	369.358 kg	349.136 kg		42.189 kg	696.527 kg	348.090 kg	348.438 kg	18.468 kg
OIER	0.462 kg	1,157.753 kg	57.598 kg		69.083 kg	1,149.604 kg	57.426 kg	1,092.178 kg	3.047 kg
Pu	*0.014 Ci*	*0.075 Ci*	*0.367 Ci*		*0.157 Ci*	*0.437 Ci*	*0.366 Ci*	*0.071 Ci*	*0.139 Ci*
Am	*0.002 Ci*	*0.154 Ci*	*0.095 Ci*		*0.024 Ci*	*0.240 Ci*	*0.094 Ci*	*0.145 Ci*	*0.014 Ci*
Cs	*0.005 Ci*	*76.690 Ci*	*0.382 Ci*		*4.393 Ci*	*72.726 Ci*	*0.380 Ci*	*72.346 Ci*	*0.044 Ci*
TOTAL ACTIVITIES									
Total U	28.293 kg	5.230 kg	5.759 kg		2,614.317 kg	0.589 kg	0.214 kg	0.375 kg	2,581.169 kg
Total Pu	7.920 Ci	1.417 Ci	4.618 Ci		439.323 Ci	0.595 Ci	0.506 Ci	0.089 Ci	430.076 Ci
Total Am	6.597 Ci	1.564 Ci	1.780 Ci		567.950 Ci	0.455 Ci	0.122 Ci	0.332 Ci	560.121 Ci
TRU	14.516 Ci	2.981 Ci	6.399 Ci		1 007.274 Ci	1.049 Ci	0.628 Ci	0.421 Ci	990.198 Ci
Total Cs	87.901 Ci	180.876 Ci	33.102 Ci		7 169.903 Ci	85.488 Ci	6.794 Ci	78.694 Ci	6 979.820 Ci
Total Sr	71.967 Ci	13.303 Ci	14.649 Ci		6 649.806 Ci	1.498 Ci	0.543 Ci	0.955 Ci	6 565.492 Ci
Beta Gamma	159.867 Ci	194.179 Ci	47.751 Ci		13 819.709 Ci	86.987 Ci	7,338 Ci	79.649 Ci	13 545.312 Ci
CONCENTRATION									
PCB in liquid	0.25 ppb		0.06 ppb		7.08 ppb	0.00 ppb	0.00 ppb		10.61 ppb
PCB in solids	177.080 ppm	194.860 ppm	177.099 ppm		180.214 ppm	180.285 ppm	177.099 ppm	194.860 ppm	177.068 ppm
Solids	0.28 g/l	65.51 g/l	49.99 g/l		0.80 g/l	187.89 g/l	189.52 g/l	177.96 g/l	0.89 g/l
U	0.000 g/cm3	0.000 g/cm3	0.000 g/cm3		0.004 g/cm3	0.000 g/cm3	0.000 g/cm3	0.000 g/cm3	0.006 g/cm3
Pu total	0.041 Ci/m3	0.060 Ci/m3	0.035 Ci/m3		0.707 Ci/m3	0.014 Ci/m3	0.014 Ci/m3	0.011 Ci/m3	1.083 Ci/m3
238 Pu	0.008 Ci/m3	0.012 Ci/m3	0.007 Ci/m3		0.141 Ci/m3	0.003 Ci/m3	0.003 Ci/m3	0.002 Ci/m3	0.217 Ci/m3
239 Pu	0.016 Ci/m3	0.024 Ci/m3	0.014 Ci/m3		0.283 Ci/m3	0.006 Ci/m3	0.006 Ci/m3	0.004 Ci/m3	0.433 Ci/m3
240 Pu	0.016 Ci/m3	0.024 Ci/m3	0.014 Ci/m3		0.283 Ci/m3	0.006 Ci/m3	0.006 Ci/m3	0.004 Ci/m3	0.433 Ci/m3
Am	0.034 Ci/m3	0.066 Ci/m3	0.013 Ci/m3		0.914 Ci/m3	0.011 Ci/m3	0.003 Ci/m3	0.041 Ci/m3	1.410 Ci/m3
TRU	0.076 Ci/m3	0.127 Ci/m3	0.048 Ci/m3		1.621 Ci/m3	0.024 Ci/m3	0.018 Ci/m3	0.052 Ci/m3	2.494 Ci/m3
TRU	68 nCi/g	117 nCi/g	41 nCi/g		1 387 nCi/g	22 nCi/g	16 nCi/g	50 nCi/g	2 065 nCi/g
Beta Gamma	0.832 Ci/m3	8.245 Ci/m3	0.357 Ci/m3		22.239 Ci/m3	2.014 Ci/m3	0.209 Ci/m3	9.739 Ci/m3	34.110 Ci/m3

DETAILED STREAM DATA SHEET FOR THE WHOLE STREAM

STREAM KE1 Nominal Case - TOTAL STREAM	ST-408	ST-409	ST-410	ST-501	ST-502	ST-503	ST-504	ST-505	ST-506
	TOTAL WATER USED FOR RESIN LEACHING AND WASHING	TOTAL WATER FOR SOLIDS LEACHING AND WASHING	SOLIDS FROM CENTRIFUGE	TOTAL SOLUTION TO FILTRATION	FILTER RINSING WATER	TOTAL SOLUTION TO ADJUST	RINSED FILTER TO CONDITIONING	GROUT FORMERS FOR FILTER CONDITIONING	CONDITIONED FILTERS
Volume	*15.792 m3*	*116.735 m3*	*29.585 m3*	*621.427 m3*	*17.875 m3*	*634.431 m3*	*0.640 m3*	*7.552 m3*	*7.963 m3*
Density	*1.000*	*1.000*	*1.128*	*1.168*	*1.000*	*1.171*	*1.390*	*2.195*	*2.194*
Total Mass	**15,791.925 kg**	**116,735.265 kg**	**33,383.365 kg**	**726,043.511 kg**	**17,875.307 kg**	**743,028.926 kg**	**889.893 kg**	**16,576.710 kg**	**17,466.603 kg**
Number of packages							**40.431**		**40.431**
LIQUID									
Volume	*15.792 m3*	*116.735 m3*	*26.527 m3*	*621.182 m3*	*17.875 m3*	*634.407 m3*	*0.420 m3*		
Density	*1.000*	*1.000*	*1.007*	*1.168*	*1.000*	*1.171*	*1.059*		*1.001*
Total Mass Liquid + Gaz	**15,791.925 kg**	**116,735.265 kg**	**26,702.238 kg**	**725,549.127 kg**	**17,875.307 kg**	**742,979.487 kg**	**444.946 kg**		
H2O	15,791.925 kg	116,735.265 kg	26,413.441 kg	515,059.748 kg	17,875.307 kg	532,541.742 kg	393.313 kg		
HNO3			227.944 kg	174,488.504 kg		174,445.702 kg	42.802 kg		
H2C2O4				218.962 kg		218.908 kg	0.054 kg		
HF				642.485 kg		642.328 kg	0.158 kg		
NaOH									
Al(NO3)3			13.097 kg	7,563.113 kg		7,561.258 kg	1.855 kg		
AlF3									
Fe(NO3)3			37.145 kg	21,448.186 kg		21,442.925 kg	5.261 kg		
CaO			0.441 kg	254.567 kg		254.505 kg	0.062 kg		
NaNO2									
NaNO3									
Miscellaneous			2.677 kg	1,545.815 kg		1,545.436 kg	0.379 kg		
UO2(NO3)2			7.492 kg	4,327.746 kg		4,326.685 kg	1.062 kg		
Pu			*0.754 Ci*	*439.093 Ci*		*438.985 Ci*	*0.108 Ci*		
Am			*0.982 Ci*	*567.884 Ci*		*567.745 Ci*	*0.139 Ci*		
Cs			*12.236 Ci*	*7,163.956 Ci*		*7,162.198 Ci*	*1.757 Ci*		
Sr			*11.511 Ci*	*6,649.566 Ci*		*6,647.935 Ci*	*1.631 Ci*		
PCB			*0.009 g*	*5.138 g*		*0.259 g*	*0.001 g*		
GAZ									
NO2									
NO									
PCB									
SOLIDS + RESINS									
Volume			*3.058 m3*	*0.245 m3*		*0.024 m3*	*0.220 m3*	*7.552 m3*	*7.963 m3*
Density			*2.185*	*2.022*		*2.022*	*2.022*	*2.195*	*2.194*
Total Mass Solids + Resins			**6,681.127 kg**	**494.385 kg**		**49.438 kg**	**444.946 kg**	**16,576.710 kg**	**17,466.603 kg**
Wt% solids	*0.00 wt%*	*0.00 wt%*	*20.01 wt%*	*0.07 wt%*	*0.00 wt%*	*0.01 wt%*	*50.00 wt%*	*100.00 wt%*	*100.00 wt%*
Al(NO3)3									1.855 kg
Al(OH)3			2.487 kg	0.154 kg		0.015 kg	0.139 kg		0.139 kg
Al2O3			81.450 kg	4.981 kg		0.498 kg	4.483 kg		4.483 kg
Fe(NO3)3									5.261 kg
FeOOH			75.097 kg	4.665 kg		0.466 kg	4.198 kg		4.198 kg
C			25.618 kg	1.564 kg		0.156 kg	1.407 kg		1.407 kg
CaO			26.689 kg	1.632 kg		0.163 kg	1.469 kg		1.531 kg
Na2C2O4									
CO2									
H2O								2,425.860 kg	2,425.860 kg
SiO2			6,046.912 kg	369.093 kg		36.909 kg	332.184 kg		332.184 kg
Grout								14,150.850 kg	14,544.163 kg
Miscellaneous			14.733 kg	0.915 kg		0.092 kg	0.824 kg		1.360 kg
Zircaloy									
Grafoil									
HNO3									42.802 kg
H2C2O4									0.054 kg
Na2U2O7									
U			0.023 kg	0.002 kg		0.000 kg	0.002 kg		0.002 kg
U3O7			0.561 kg	0.043 kg		0.004 kg	0.039 kg		0.039 kg
UH3			0.038 kg	0.003 kg		0.000 kg	0.003 kg		0.003 kg
UO2			0.767 kg	0.059 kg		0.006 kg	0.053 kg		0.053 kg
UO2(NO3)2									1.062 kg
UO4-4H2O			0.019 kg	0.001 kg		0.000 kg	0.001 kg		0.001 kg
Pu			*1.243 Ci*	*0.073 Ci*		*0.007 Ci*	*0.066 Ci*		*0.174 Ci*
Am			*0.536 Ci*	*0.042 Ci*		*0.004 Ci*	*0.038 Ci*		*0.177 Ci*
Cs			*20.037 Ci*	*1.554 Ci*		*0.155 Ci*	*1.399 Ci*		*3.156 Ci*
Sr			*3.137 Ci*	*0.240 Ci*		*0.024 Ci*	*0.216 Ci*		*1.847 Ci*
PCB			*1,183.017 g*	*89.095 g*		*8.910 g*	*85.063 g*		*85.065 g*
RESINS									
Zeolite			349.136 kg	42.189 kg		4.219 kg	37.970 kg		37.970 kg
OIER			57.598 kg	69.083 kg		6.908 kg	62.175 kg		62.175 kg
Pu			*2.621 Ci*	*0.157 Ci*		*0.016 Ci*	*0.141 Ci*		*0.141 Ci*
Am			*0.263 Ci*	*0.024 Ci*		*0.002 Ci*	*0.022 Ci*		*0.022 Ci*
Cs			*0.829 Ci*	*4.393 Ci*		*0.439 Ci*	*3.954 Ci*		*3.954 Ci*
TOTAL ACTIVITIES									
Total U			5.759 kg	2,614.317 kg		2,613.591 kg	0.726 kg		0.726 kg
Total Pu			4.618 Ci	439.323 Ci		439.008 Ci	0.315 Ci		0.315 Ci
Total Am			1.780 Ci	567.950 Ci		567.751 Ci	0.199 Ci		0.199 Ci
TRU			**6.399 Ci**	**1 007.274 Ci**		**1 006.759 Ci**	**0.514 Ci**		**0.514 Ci**
Total Cs			33.102 Ci	7 169.903 Ci		7 162.793 Ci	7.110 Ci		7.110 Ci
Total Sr			14.649 Ci	6 649.806 Ci		6 647.959 Ci	1.847 Ci		1.847 Ci
Beta Gamma			**47.751 Ci**	**13 819.709 Ci**		**13 810.752 Ci**	**8.957 Ci**		**8.957 Ci**
CONCENTRATION									
PCB in liquid			0.33 ppb	7.08 ppb		0.35 ppb	2.83 ppb		
PCB in solids			177.068 ppm	180.214 ppm		180.214 ppm	191.177 ppm		4.870 ppm
Solids			225.83 g/l	0.80 g/l		0.08 g/l	695.04 g/l		2193.55 g/l
U			0.000 g/cm3	0.004 g/cm3		0.004 g/cm3	0.001 g/cm3		0.000 g/cm3
Pu total			**0.156 Ci/m3**	**0.707 Ci/m3**		**0.692 Ci/m3**	**0.492 Ci/m3**		**0.040 Ci/m3**
238 Pu			0.031 Ci/m3	0.141 Ci/m3		0.138 Ci/m3	0.098 Ci/m3		0.008 Ci/m3
239 Pu			0.062 Ci/m3	0.283 Ci/m3		0.277 Ci/m3	0.197 Ci/m3		0.016 Ci/m3
240 Pu			0.062 Ci/m3	0.283 Ci/m3		0.277 Ci/m3	0.197 Ci/m3		0.016 Ci/m3
Am			0.060 Ci/m3	0.914 Ci/m3		0.895 Ci/m3	0.311 Ci/m3		0.025 Ci/m3
TRU			0.216 Ci/m3	1.621 Ci/m3		1.587 Ci/m3	0.804 Ci/m3		0.065 Ci/m3
TRU			**192 nCi/g**	**1 387 nCi/g**		**1 355 nCi/g**	**578 nCi/g**		**29 nCi/g**
Beta Gamma			**1.614 Ci/m3**	**22.239 Ci/m3**		**21.769 Ci/m3**	**13.991 Ci/m3**		**1.125 Ci/m3**

DETAILED STREAM DATA SHEET FOR THE WHOLE STREAM

STREAM KE1 Nominal Case - TOTAL STREAM	ST-601 SOLUTION BEFORE NEUTRALIZATION	ST-602 UO2(NO3)2 ADDITION SOLUTION	ST-603 FE(NO3)3 / AL(NO3)3 ADDITION SOLUTION	ST-604 FINAL SOLUTION SENT TO TWRS	ST-605 NANO2 ADDITION SOLUTION	ST-607 NAOH ADDITION SOLUTION	ST-608 WATER ADJUSTMENT	ST-701 RESINS + SOLID SOLUTION AFTER DECANTATION	ST-702 SUPERNATE TO ELIMINATE
Volume	*634.834 m3*	*0.359 m3*		*965.583 m3*	*119.865 m3*	*182.616 m3*			
Density	*1.171*	*1.323*		*1.191*	*1.251*	*1.403*			
Total Mass	743,503.927 kg	475.001 kg		1,149,689.084 kg	149,974.973 kg	256,210.184 kg			
Number of packages									
LIQUID									
Volume	*634.809 m3*	*0.359 m3*		*960.606 m3*	*119.865 m3*	*182.616 m3*			
Density	*1.171*	*1.323*	*1.328*	*1.182*	*1.251*	*1.403*	*1.000*	*1.000*	*1.000*
Total Mass Liquid + Gaz	743,454.488 kg	475.001 kg		1,135,907.276 kg	149,974.973 kg	256,210.184 kg			
H2O	532,875.283 kg	333.542 kg		792,691.723 kg	89,984.984 kg	117,422.059 kg			
HNO3	174,445.702 kg								
H2C2O4	218.908 kg								
HF	642.328 kg								
NaOH				11,574.195 kg		138,788.125 kg			
Al(NO3)3	7,561.258 kg								
AlF3				899.259 kg					
Fe(NO3)3	21,442.925 kg								
CaO	254.505 kg			254.505 kg					
NaNO2				59,989.989 kg	59,989.989 kg				
NaNO3				268,952.169 kg					
Miscellaneous	1,545.436 kg			1,545.436 kg					
UO2(NO3)2	4,468.144 kg	141.459 kg							
Pu	*438.985 Ci*								
Am	*567.745 Ci*								
Cs	*7,162.198 Ci*			*7,162.198 Ci*					
Sr	*6,647.935 Ci*								
PCB	*0.259 g*			*0.013 g*					
GAZ									
NO2									
NO									
PCB									
SOLIDS + RESINS									
Volume	*0.024 m3*			*4.977 m3*					
Density	*2.022*			*2.769*					
Total Mass Solids + Resins	49.438 kg			13,781.807 kg					
Wt% solids	*0.01 wt%*	*0.00 wt%*	*0.00 wt%*	*1.20 wt%*	*0.00 wt%*	*0.00 wt%*	*0.00 wt%*	*0.00 wt%*	*0.00 wt%*
Al(NO3)3									
Al(OH)3	0.015 kg			1,933.901 kg					
Al2O3	0.498 kg			0.498 kg					
Fe(NO3)3									
FeOOH	0.466 kg			7,878.093 kg					
C	0.156 kg			0.156 kg					
CaO	0.163 kg			0.163 kg					
Na2C2O4				325.929 kg					
CO2									
H2O									
SiO2	36.909 kg			36.909 kg					
Grout									
Miscellaneous	0.092 kg			0.092 kg					
Zircaloy									
Grafoil									
HNO3									
H2C2O4									
Na2U2O7				3,594.928 kg					
U	0.000 kg			0.000 kg					
U3O7	0.004 kg			0.004 kg					
UH3	0.000 kg			0.000 kg					
UO2	0.006 kg			0.006 kg					
UO2(NO3)2									
UO4-4H2O	0.000 kg			0.000 kg					
Pu	*0.007 Ci*			*438.993 Ci*					
Am	*0.004 Ci*			*567.749 Ci*					
Cs	*0.155 Ci*			*0.155 Ci*					
Sr	*0.024 Ci*			*6,647.959 Ci*					
PCB	*8.910 g*			*9.155 g*					
RESINS									
Zeolite	4.219 kg			4.219 kg					
OIER	6.908 kg			6.908 kg					
Pu	*0.016 Ci*			*0.016 Ci*					
Am	*0.002 Ci*			*0.002 Ci*					
Cs	*0.439 Ci*			*0.439 Ci*					
TOTAL ACTIVITIES									
Total U	2,699.040 kg	85.450 kg		2,699.040 kg					
Total Pu	439.008 Ci			439.008 Ci					
Total Am	567.751 Ci			567.751 Ci					
TRU	1 006.759 Ci			1 006.759 Ci					
Total Cs	7 162.793 Ci			7 162.793 Ci					
Total Sr	6 647.959 Ci			6 647.959 Ci					
Beta Gamma	13 810.752 Ci			13 810.752 Ci					
CONCENTRATION									
PCB in liquid	0.35 ppb			0.01 ppb					
PCB in solids	180.214 ppm			0.664 ppm					
Solids	0.08 g/l			14.27 g/l					
U	0.004 g/cm3	0.238 g/cm3		0.003 g/cm3					
Pu total	0.692 Ci/m3			0.455 Ci/m3					
238 Pu	0.138 Ci/m3			0.091 Ci/m3					
239 Pu	0.277 Ci/m3			0.182 Ci/m3					
240 Pu	0.277 Ci/m3			0.182 Ci/m3					
Am	0.894 Ci/m3			0.588 Ci/m3					
TRU	1.586 Ci/m3			1.043 Ci/m3					
TRU	1 354 nCi/g			876 nCi/g					
Beta Gamma	21.755 Ci/m3			14.303 Ci/m3					

DETAILED STREAM DATA SHEET FOR THE WHOLE STREAM

STREAM KE1 Nominal Case - TOTAL STREAM	ST-703 GROUT FORMERS	ST-704 FINAL GROUT WASTES TO ERDF	ST-801 ADDED WATER TO OFF-GAS TREATMENT
Volume			*1.872 m3*
Density			*1.000*
Total Mass			1,872.241 kg
Number of packages			
LIQUID			
Volume			*1.872 m3*
Density			*1.000*
Total Mass Liquid + Gaz			1,872.241 kg
H2O			1,872.241 kg
HNO3			
H2C2O4			
HF			
NaOH			
Al(NO3)3			
AlF3			
Fe(NO3)3			
CaO			
NaNO2			
NaNO3			
Miscellaneous			
UO2(NO3)2			
Pu			
Am			
Cs			
Sr			
PCB			
GAZ			
NO2			
NO			
PCB			
SOLIDS + RESINS			
Volume			
Density			
Total Mass Solids + Resins			
Wt% solids	*0.00 wt%*	*0.00 wt%*	*0.00 wt%*
Al(NO3)3			
Al(OH)3			
Al2O3			
Fe(NO3)3			
FeOOH			
C			
CaO			
Na2C2O4			
CO2			
H2O			
SiO2			
Grout			
Miscellaneous			
Zircaloy			
Grafoil			
HNO3			
H2C2O4			
Na2U2O7			
U			
U3O7			
UH3			
UO2			
UO2(NO3)2			
UO4-4H2O			
Pu			
Am			
Cs			
Sr			
PCB			
RESINS			
Zeolite			
OIER			
Pu			
Am			
Cs			
TOTAL ACTIVITIES			
Total U			
Total Pu			
Total Am			
TRU			
Total Cs			
Total Sr			
Beta Gamma			
CONCENTRATION			
PCB in liquid			
PCB in solids			
Solids			
U			
Pu total			
238 Pu			
239 Pu			
240 Pu			
Am			
TRU			
TRU			
Beta Gamma			

APPENDIX B

KE2 STREAM

This page intentionally left blank.

SLUDGE TREATMENT
CHEMICAL FLOW SHEET

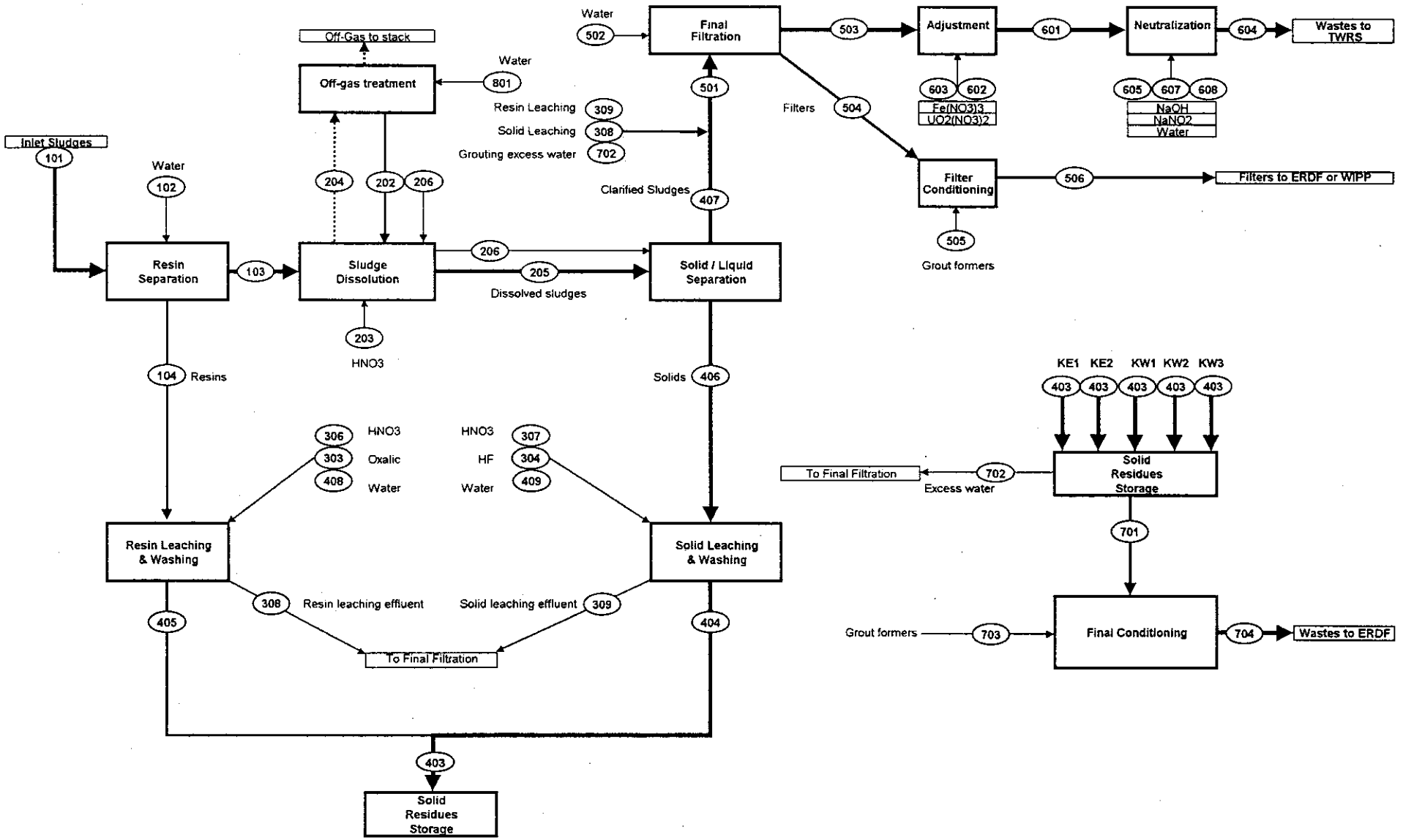

SLUDGE TREATMENT
MATERIAL BALANCE

STREAM KE2
Nominal Case : □1 Batch 160 kg solids
OF BATCHES : 24.4

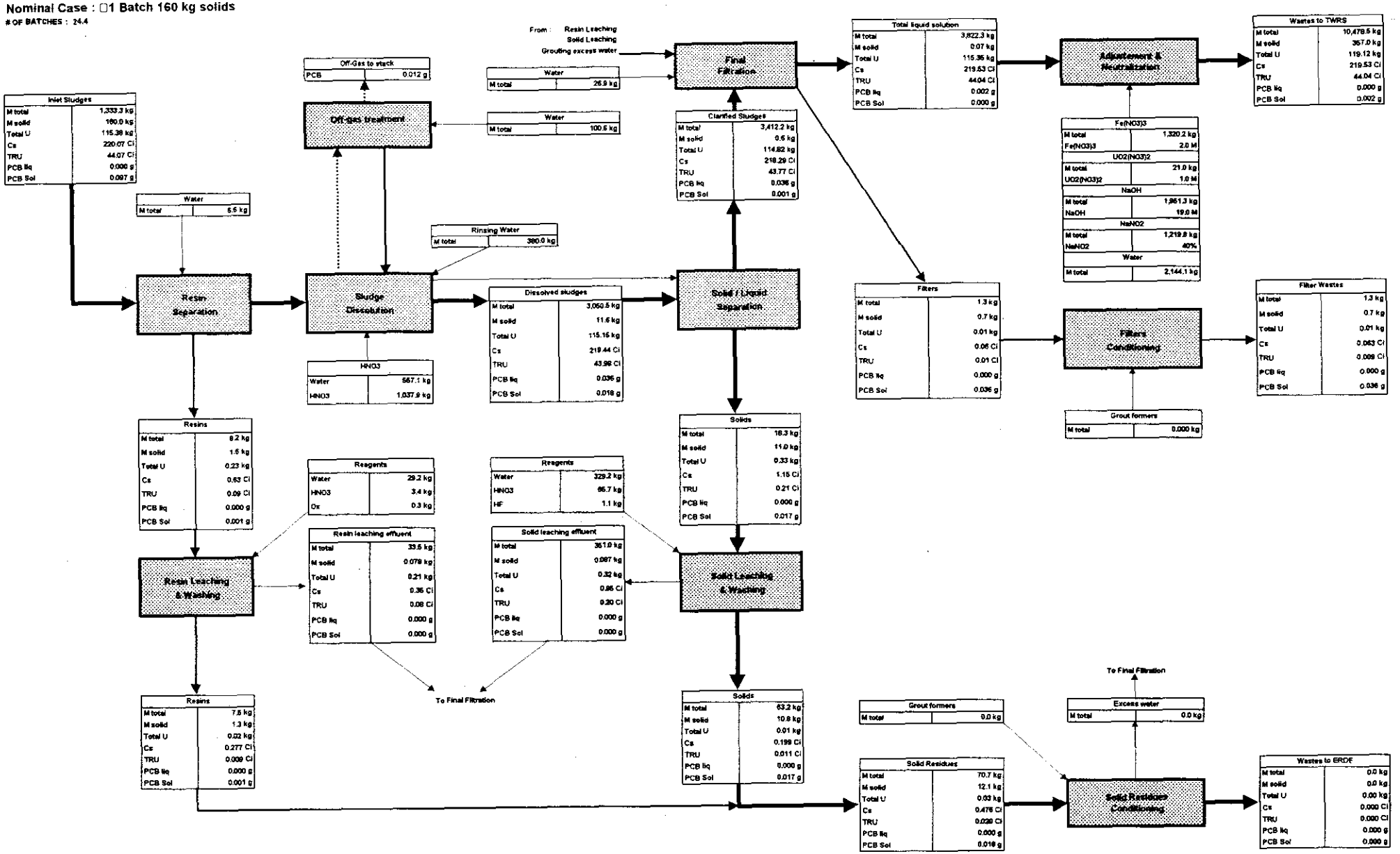

SLUDGE TREATMENT
CONCENTRATION

STREAM KE2
Nominal Case : □1 Batch 160 kg solids

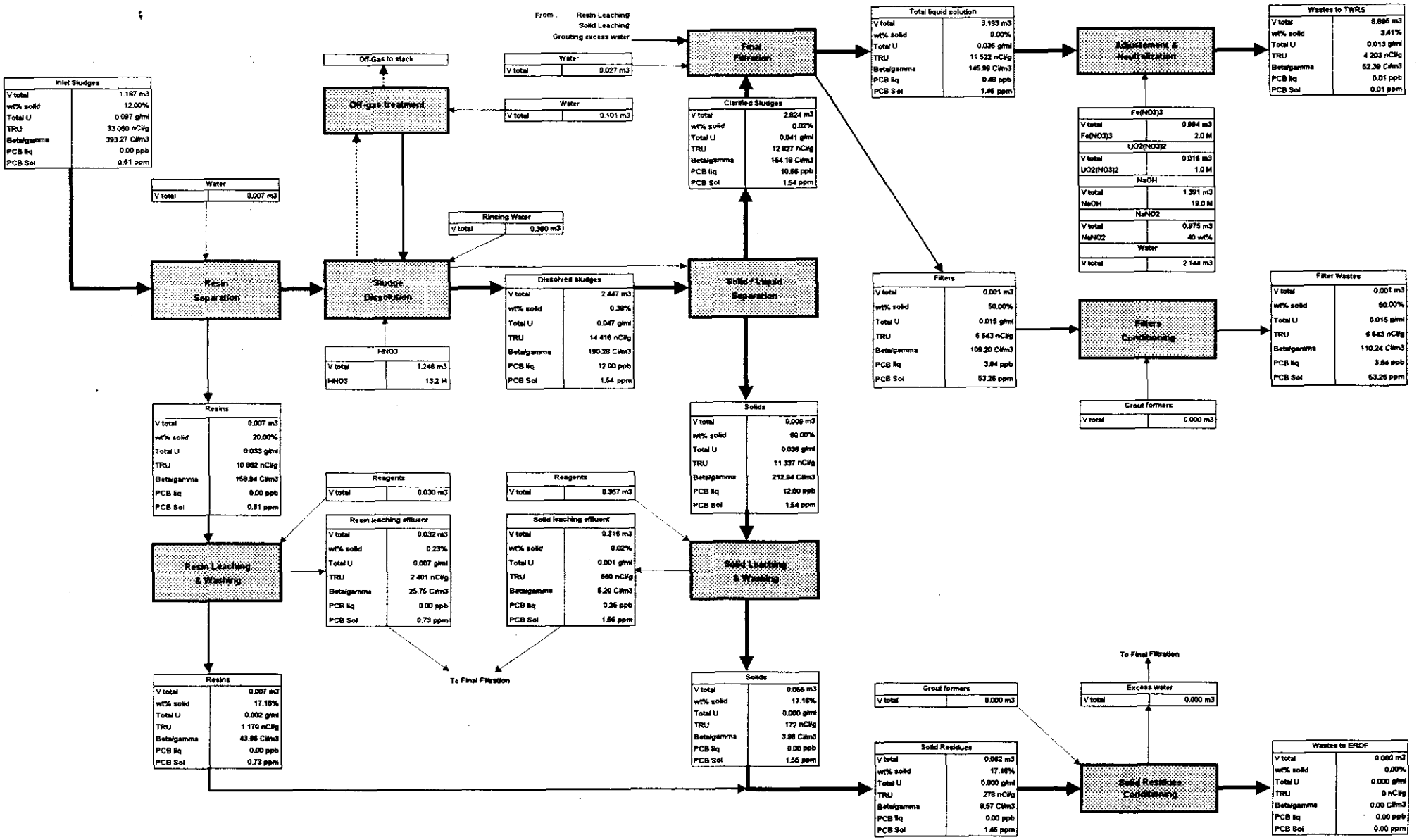

Requirements

STREAM KE2	Requirements		Obtained results
Effluent sent to TWRS	**TWRS Requirements**		
PCB in liq	< 0.5 ppb		0.01 ppb
PCB in sol	< 2 ppm		0.005 ppm
Concentration	< 40 g/l		40.13 g/l
Na(NO3) concentration			2.65 M
NaOH Concentration	Req on [OH-] : 0.26 M		0.26 M
NaOH + Na(NO2) Concentration	Req on [OH-]+[NO2-] : 1.06 M		1.06 M
Na(NO2) concentration	Req on [NO2-] : none		0.79 M
Volume generated m3			**217 m3**
Filters : Grouted sent to ERDF or sent as-is to WIPP	**ERDF Requirements**	**WIPP Requirements**	
PCB (ppm)		< 2 ppm	53.257 ppm
U g/ml	< 0.026 g/ml		0.0147 g/ml
Pu(Total)	Ci/m3		6.871 Ci/m3
238 Pu	< 1.5 Ci/m3		1.374 Ci/m3
239 Pu	< 0.029 Ci/m3		2.748 Ci/m3
240 Pu	< 0.029 Ci/m3		2.748 Ci/m3
Am	< 0.05 Ci/m3		4.156 Ci/m3
TRU	< 100 nanoCi/g	> 100 nanoCi/g	6 643 nCi/g
Volume generated m3			0.3 m3
Number of 0.2 m3 drums			**1.3**

DETAILED STREAM DATA SHEET FOR ONE DAILY BATCH

STREAM KE2 Nominal Case : 1 Batch 160 kg solids	ST-101 SLUDGE AT INLET OF TREATMENT UNIT	ST-102 WATER ADDITION FOR SCREEN WASHING	ST-103 SLUDGE STREAM FROM RESIN SEPARATION	ST-104 RESIN STREAM FROM RESIN SEPARATION	ST-201 SLUDGE TO DISSOLVER	ST-202 RECYCLED NITRIC ACID	ST-203 HNO3 FOR DISSOLUTION	ST-204 DISSOLUTION OFF-GAS	ST-205 DISSOLUTION SOLUTION
Volume	*1.187 m3*	*0.007 m3*	*1.186 m3*	*0.007 m3*	*1.186 m3*	*0.135 m3*	*1.248 m3*	*17.311 m3*	*2.447 m3*
Density	*1.124*	*1.000*	*1.122*	*1.162*	*1.122*	*1.125*	*1.278*	*0.002*	*1.247*
Total Mass	1,333.333 kg	6.573 kg	1,331.690 kg	8.216 kg	1,331.690 kg	151.511 kg	1,595.063 kg	28.592 kg	3,050.529 kg
Number of packages									
LIQUID									
Volume	*1.173 m3*	*0.007 m3*	*1.173 m3*	*0.007 m3*	*1.173 m3*	*0.135 m3*	*1.248 m3*	*17.311 m3*	*2.444 m3*
Density	*1.000*	*1.000*	*1.000*	*1.000*	*1.000*	*1.125*	*1.278*	*0.002*	*1.244*
Total Mass Liquid + Gaz	1,173.333 kg	6.573 kg	1,173.333 kg	6.573 kg	1,173.333 kg	151.511 kg	1,595.063 kg	28.592 kg	3,038.974 kg
H2O	1,173.333 kg	6.573 kg	1,173.333 kg	6.573 kg	1,173.333 kg	100.603 kg	557.149 kg		1,860.557 kg
HNO3						50.908 kg	1,037.914 kg		925.000 kg
H2C2O4									
HF									
NaOH									
Al(NO3)3									37.626 kg
AlF3									
Fe(NO3)3									23.795 kg
CaO									0.117 kg
NaNO2									
NaNO3									
Miscellaneous									1.343 kg
UO2(NO3)2									190.535 kg
Pu									*20.273 Ci*
Am									*23.598 Ci*
Cs									*218.785 Ci*
Sr									*246.011 Ci*
PCB									*0.036 g*
GAZ									
NO2								12.508 kg	
NO								16.084 kg	
PCB								*0.012 g*	
SOLIDS + RESINS									
Volume	*0.013 m3*		*0.013 m3*	*0.000 m3*	*0.013 m3*				*0.003 m3*
Density	*11.950*		*12.040*	*3.293*	*12.040*				*3.835*
Total Mass Solids + Resins	160.000 kg		158.357 kg	1.643 kg	158.357 kg				11.555 kg
Wt% solids	*12.00 wt%*	*0.00 wt%*	*11.89 wt%*	*20.00 wt%*	*11.89 wt%*	*0.00 wt%*	*0.00 wt%*	*0.00 wt%*	*0.38 wt%*
Al(NO3)3									
Al(OH)3	13.946 kg		13.918 kg	0.028 kg	13.918 kg				0.139 kg
Al2O3									
Fe(NO3)3									
FeOOH	8.848 kg		8.830 kg	0.018 kg	8.830 kg				0.088 kg
C	0.188 kg		0.188 kg	0.000 kg	0.188 kg				0.188 kg
CaO	0.131 kg		0.130 kg	0.000 kg	0.130 kg				0.013 kg
Na2C2O4									
CO2	0.609 kg		0.607 kg	0.001 kg	0.607 kg				
H2O									
SiO2	6.780 kg		6.766 kg	0.014 kg	6.766 kg				6.766 kg
Grout									
Miscellaneous	1.359 kg		1.357 kg	0.003 kg	1.357 kg				0.014 kg
Zircaloy	4.224 kg		4.215 kg	0.008 kg	4.215 kg				4.215 kg
Grafoil									
HNO3									
H2C2O4									
Na2U2O7									
U	61.824 kg		61.700 kg	0.124 kg	61.700 kg				0.031 kg
U3O7	19.677 kg		19.638 kg	0.039 kg	19.638 kg				0.010 kg
UH3	3.702 kg		3.695 kg	0.007 kg	3.695 kg				0.002 kg
UO2	37.316 kg		37.242 kg	0.075 kg	37.242 kg				0.019 kg
UO2(NO3)2									
UO4-4H2O									
Pu	*20.395 Ci*		*20.354 Ci*	*0.041 Ci*	*20.354 Ci*				*0.061 Ci*
Am	*23.670 Ci*		*23.623 Ci*	*0.047 Ci*	*23.623 Ci*				*0.024 Ci*
Cs	*219.874 Ci*		*219.434 Ci*	*0.440 Ci*	*219.434 Ci*				*0.658 Ci*
Sr	*246.627 Ci*		*246.134 Ci*	*0.493 Ci*	*246.134 Ci*				*0.123 Ci*
PCB	*0.097 g*		*0.096 g*	*0.001 g*	*0.096 g*				*0.018 g*
RESINS									
Zeolite									
OIER	1.396 kg		0.070 kg	1.326 kg	0.070 kg				0.070 kg
Pu	*0.001 Ci*		*0.000 Ci*	*0.001 Ci*	*0.000 Ci*				*0.021 Ci*
Am	*0.001 Ci*		*0.000 Ci*	*0.000 Ci*	*0.000 Ci*				*0.002 Ci*
Cs	*0.201 Ci*		*0.010 Ci*	*0.191 Ci*	*0.010 Ci*				*0.001 Ci*
TOTAL ACTIVITIES									
Total U	115.383 kg		115.152 kg	0.231 kg	115.152 kg				115.152 kg
Total Pu	20.396 Ci		20.354 Ci	0.041 Ci	20.354 Ci				20.354 Ci
Total Am	23.671 Ci		23.623 Ci	0.048 Ci	23.623 Ci				23.623 Ci
TRU	44.067 Ci		43.978 Ci	0.089 Ci	43.978 Ci				43.978 Ci
Total Cs	220.075 Ci		219.444 Ci	0.631 Ci	219.444 Ci				219.444 Ci
Total Sr	246.627 Ci		246.134 Ci	0.493 Ci	246.134 Ci				246.134 Ci
Beta Gamma	466.702 Ci		465.578 Ci	1.124 Ci	465.578 Ci				465.578 Ci
CONCENTRATION									
PCB in liquid									12.00 ppb
PCB in solids	0.606 ppm		0.606 ppm	0.606 ppm	0.606 ppm				1.545 ppm
Solids	134.83 g/l		133.47 g/l	232.36 g/l	17.16 g/l				4.72 g/l
U	0.097 g/cm3		0.097 g/cm3	0.033 g/cm3	0.097 g/cm3				0.047 g/cm3
Pu total	17.187 Ci/m3		17.155 Ci/m3	5.855 Ci/m3	17.155 Ci/m3				8.319 Ci/m3
238 Pu	3.437 Ci/m3		3.431 Ci/m3	1.171 Ci/m3	3.431 Ci/m3				1.664 Ci/m3
239 Pu	6.875 Ci/m3		6.862 Ci/m3	2.342 Ci/m3	6.862 Ci/m3				3.328 Ci/m3
240 Pu	6.875 Ci/m3		6.862 Ci/m3	2.342 Ci/m3	6.862 Ci/m3				3.328 Ci/m3
Am	19.946 Ci/m3		19.910 Ci/m3	6.764 Ci/m3	19.910 Ci/m3				9.655 Ci/m3
TRU	37.133 Ci/m3		37.065 Ci/m3	12.619 Ci/m3	37.065 Ci/m3				17.974 Ci/m3
TRU	33 050 nCi/g		33 024 nCi/g	10 862 nCi/g	33 024 nCi/g				14 416 nCi/g
Beta Gamma	393.269 Ci/m3		392.401 Ci/m3	158.937 Ci/m3	392.401 Ci/m3				190.281 Ci/m3

DETAILED STREAM DATA SHEET FOR ONE DAILY BATCH

STREAM KE2 Nominal Case : 1 Batch 160 kg solids	ST-208 DISSOLVER WASHING WATER	ST-301 RESIN STREAM TO LEACHING	ST-302 TOTAL REAGENTS FOR RESINS AND SOLIDS LEACHING	ST-303 TOTAL OXALIC USED FOR RESIN LEACHING AND WASHING	ST-304 TOTAL HF USED FOR SOLIDS LEACHING AND WASHING	ST-305 TOTAL HNO3 USED FOR RESINS AND SOLIDS LEACHING	ST-306 TOTAL HNO3 USED FOR RESIN LEACHING AND WASHING	ST-307 TOTAL HNO3 USED FOR SOLIDS LEACHING AND WASHING	ST-308 TOTAL CLARIFIED SOLUTION FROM RESIN LEACHING
Volume	*0.380 m3*	*0.007 m3*	*0.193 m3*	*0.012 m3*	*0.097 m3*	*0.083 m3*	*0.004 m3*	*0.079 m3*	*0.032 m3*
Density	*1.000*	*1.162*	*1.164*	*1.100*	*1.075*	*1.278*	*1.278*	*1.278*	*1.062*
Total Mass	380.000 kg	8.216 kg	224.362 kg	13.597 kg	104.609 kg	106.156 kg	5.228 kg	100.928 kg	33.490 kg
Number of packages									
LIQUID									
Volume	*0.380 m3*	*0.007 m3*	*0.193 m3*	*0.012 m3*	*0.097 m3*	*0.083 m3*	*0.004 m3*	*0.079 m3*	*0.031 m3*
Density	*1.000*	*1.000*	*1.164*	*1.100*	*1.075*	*1.278*	*1.278*	*1.278*	*1.062*
Total Mass Liquid + Gaz	380.000 kg	6.573 kg	224.362 kg	13.597 kg	104.609 kg	106.156 kg	5.228 kg	100.928 kg	33.412 kg
H2O	380.000 kg	6.573 kg	153.985 kg	13.347 kg	103.559 kg	37.080 kg	1.826 kg	35.254 kg	29.597 kg
HNO3			69.076 kg			69.076 kg	3.402 kg	65.674 kg	3.097 kg
H2C2O4			0.250 kg	0.250 kg					0.250 kg
HF			1.050 kg		1.050 kg				
NaOH									
Al(NO3)3									0.068 kg
AlF3									
Fe(NO3)3									0.043 kg
CaO									0.000 kg
NaNO2									
NaNO3									
Miscellaneous									0.002 kg
UO2(NO3)2									0.353 kg
Pu									*0.040 Ci*
Am									*0.039 Ci*
Cs									*0.337 Ci*
Sr									*0.456 Ci*
PCB									
GAZ									
NO2									
NO									
PCB									
SOLIDS + RESINS									
Volume		*0.000 m3*							*0.000 m3*
Density		*3.293*							*1.429*
Total Mass Solids + Resins		1.643 kg							0.078 kg
Wt% solids	*0.00 wt%*	*20.00 wt%*	*0.00 wt%*	*0.00 wt%*	*0.00 wt%*	*0.00 wt%*	*0.00 wt%*	*0.00 wt%*	*0.23 wt%*
Al(NO3)3									
Al(OH)3		0.028 kg							0.000 kg
Al2O3									
Fe(NO3)3									
FeOOH		0.018 kg							0.000 kg
C		0.000 kg							0.000 kg
CaO		0.000 kg							0.000 kg
Na2C2O4									
CO2		0.001 kg							
H2O									
SiO2		0.014 kg							0.001 kg
Grout									
Miscellaneous		0.003 kg							0.000 kg
Zircaloy		0.008 kg							0.000 kg
Grafoil									
HNO3									
H2C2O4									
Na2U2O7									
U		0.124 kg							0.001 kg
U3O7		0.039 kg							0.000 kg
UH3		0.007 kg							0.000 kg
UO2		0.075 kg							0.000 kg
UO2(NO3)2									
UO4-4H2O									
Pu		*0.041 Ci*							*0.000 Ci*
Am		*0.047 Ci*							*0.000 Ci*
Cs		*0.440 Ci*							*0.012 Ci*
Sr		*0.493 Ci*							*0.002 Ci*
PCB		*0.001 g*							*0.000 g*
RESINS									
Zeolite									
OIER		1.326 kg							0.075 kg
Pu		*0.001 Ci*							*0.000 Ci*
Am		*0.000 Ci*							*0.000 Ci*
Cs		*0.191 Ci*							*0.005 Ci*
TOTAL ACTIVITIES									
Total U		0.231 kg							0.214 kg
Total Pu		0.041 Ci							0.041 Ci
Total Am		0.048 Ci							0.040 Ci
TRU		0.089 Ci							0.080 Ci
Total Cs		0.631 Ci							0.354 Ci
Total Sr		0.493 Ci							0.458 Ci
Beta Gamma		1.124 Ci							0.812 Ci
CONCENTRATION									
PCB in liquid									
PCB in solids		0.606 ppm							0.726 ppm
Solids		232.36 g/l							2.46 g/l
U		0.033 g/cm3							0.007 g/cm3
Pu total		5.855 Ci/m3							1.285 Ci/m3
238 Pu		1.171 Ci/m3							0.257 Ci/m3
239 Pu		2.342 Ci/m3							0.514 Ci/m3
240 Pu		2.342 Ci/m3							0.514 Ci/m3
Am		6.764 Ci/m3							1.266 Ci/m3
TRU		12.619 Ci/m3							2.551 Ci/m3
TRU		10 862 nCi/g							2 401 nCi/g
Beta Gamma		158.937 Ci/m3							25.748 Ci/m3

DETAILED STREAM DATA SHEET FOR ONE DAILY BATCH

STREAM KE2 Nominal Case : 1 Batch 160 kg solids	ST-309 TOTAL SOLIDS LEACHING EFFLUENT	ST-310 LEACHED RESINS	ST-311 LEACHED SOLIDS	ST-401 TOTAL WATER USED FOR RESINS AND SOLIDS WASHING	ST-402 TOTAL SOLUTION FROM CENTRIFUGE	ST-403 RESINS + SOLID RESIDUES FROM LEACHING	ST-404 FINAL DECLOGGING (SOLIDS)	ST-405 FINAL DECLOGGING (RESIN)	ST-407 DISSOLUTION SOLUTION AFTER CENTRIFUGE
Volume	*0.316 m3*	*0.025 m3*	*0.218 m3*	*0.204 m3*	*3.189 m3*	*0.062 m3*	*0.055 m3*	*0.007 m3*	*2.824 m3*
Density	*1.111*	*1.095*	*1.191*	*1.000*	*1.191*	*1.140*	*1.146*	*1.054*	*1.208*
Total Mass	**350.989 kg**	**26.990 kg**	**260.100 kg**	**204.378 kg**	**3,796.712 kg**	**70.710 kg**	**63.170 kg**	**7.539 kg**	**3,412.233 kg**
Number of packages									
LIQUID									
Volume	*0.316 m3*	*0.024 m3*	*0.216 m3*	*0.204 m3*	*3.189 m3*	*0.059 m3*	*0.052 m3*	*0.006 m3*	*2.824 m3*
Density	*1.110*	*1.082*	*1.156*	*1.000*	*1.190*	*1.000*	*1.002*	*1.000*	*1.208*
Total Mass Liquid + Gaz	**350.902 kg**	**25.618 kg**	**249.226 kg**	**204.378 kg**	**3,795.969 kg**	**58.574 kg**	**52.329 kg**	**6.245 kg**	**3,411.656 kg**
H2O	281.363 kg	21.800 kg	182.000 kg	204.378 kg	2,547.038 kg	58.516 kg	52.274 kg	6.242 kg	2,236.077 kg
HNO3	67.805 kg	3.100 kg	66.000 kg		993.674 kg	0.056 kg	0.053 kg	0.003 kg	922.773 kg
H2C2O4		0.250 kg			0.250 kg	0.000 kg		0.000 kg	
HF	1.049 kg		1.050 kg		1.049 kg	0.001 kg	0.001 kg		
NaOH									
Al(NO3)3	0.091 kg	0.069 kg	0.015 kg		37.695 kg	0.000 kg	0.000 kg	0.000 kg	37.536 kg
AlF3									
Fe(NO3)3	0.057 kg	0.043 kg	0.010 kg		23.838 kg	0.000 kg	0.000 kg	0.000 kg	23.738 kg
CaO	0.000 kg	0.000 kg	0.000 kg		0.118 kg	0.000 kg	0.000 kg	0.000 kg	0.117 kg
NaNO2									
NaNO3									
Miscellaneous	0.003 kg	0.002 kg	0.001 kg		1.346 kg	0.000 kg	0.000 kg	0.000 kg	1.340 kg
UO2(NO3)2	0.533 kg	0.353 kg	0.151 kg		190.963 kg	0.000 kg	0.000 kg	0.000 kg	190.076 kg
Pu	*0.117 Ci*	*0.041 Ci*	*0.076 Ci*		*20.381 Ci*	*0.000 Ci*	*0.000 Ci*	*0.000 Ci*	*20.224 Ci*
Am	*0.079 Ci*	*0.039 Ci*	*0.032 Ci*		*23.659 Ci*	*0.000 Ci*	*0.000 Ci*	*0.000 Ci*	*23.541 Ci*
Cs	*0.950 Ci*	*0.337 Ci*	*0.511 Ci*		*219.545 Ci*	*0.001 Ci*	*0.000 Ci*	*0.000 Ci*	*218.258 Ci*
Sr	*0.689 Ci*	*0.456 Ci*	*0.195 Ci*		*246.563 Ci*	*0.001 Ci*	*0.000 Ci*	*0.000 Ci*	*245.418 Ci*
PCB	*0.000 g*		*0.000 g*		*0.036 g*	*0.000 g*	*0.000 g*		*0.036 g*
GAZ									
NO2									
NO									
PCB									
SOLIDS + RESINS									
Volume	*0.000 m3*	*0.001 m3*	*0.003 m3*		*0.000 m3*	*0.003 m3*	*0.003 m3*	*0.001 m3*	*0.000 m3*
Density	*3.818*	*1.429*	*3.787*		*3.582*	*3.536*	*3.787*	*1.429*	*3.835*
Total Mass Solids + Resins	**0.087 kg**	**1.372 kg**	**10.874 kg**		**0.743 kg**	**12.136 kg**	**10.842 kg**	**1.294 kg**	**0.578 kg**
Wt% solids	*0.02 wt%*	*5.08 wt%*	*4.18 wt%*	*0.00 wt%*	*0.02 wt%*	*17.16 wt%*	*17.16 wt%*	*17.16 wt%*	*0.02 wt%*
Al(NO3)3									
Al(OH)3	0.001 kg	0.003 kg	0.132 kg		0.008 kg	0.134 kg	0.131 kg	0.003 kg	0.007 kg
Al2O3									
Fe(NO3)3									
FeOOH	0.001 kg	0.002 kg	0.083 kg		0.005 kg	0.085 kg	0.083 kg	0.002 kg	0.004 kg
C	0.001 kg	0.000 kg	0.178 kg		0.011 kg	0.177 kg	0.177 kg	0.000 kg	0.009 kg
CaO	0.000 kg	0.000 kg	0.012 kg		0.001 kg	0.012 kg	0.012 kg	0.000 kg	0.001 kg
Na2C2O4									
CO2									
H2O									
SiO2	0.051 kg	0.014 kg	6.396 kg		0.390 kg	6.390 kg	6.377 kg	0.013 kg	0.338 kg
Grout									
Miscellaneous	0.000 kg	0.000 kg	0.013 kg		0.001 kg	0.013 kg	0.013 kg	0.000 kg	0.001 kg
Zircaloy	0.032 kg	0.008 kg	3.985 kg		0.243 kg	3.981 kg	3.973 kg	0.008 kg	0.211 kg
Grafoil									
HNO3									
H2C2O4									
Na2U2O7									
U	0.000 kg	0.009 kg	0.005 kg		0.002 kg	0.014 kg	0.005 kg	0.009 kg	0.002 kg
U3O7	0.000 kg	0.003 kg	0.002 kg		0.001 kg	0.004 kg	0.002 kg	0.003 kg	0.000 kg
UH3	0.000 kg	0.001 kg	0.000 kg		0.000 kg	0.001 kg	0.000 kg	0.001 kg	0.000 kg
UO2	0.000 kg	0.006 kg	0.003 kg		0.001 kg	0.008 kg	0.003 kg	0.005 kg	0.001 kg
UO2(NO3)2									
UO4-4H2O									
Pu	*0.000 Ci*	*0.001 Ci*	*0.006 Ci*		*0.003 Ci*	*0.007 Ci*	*0.006 Ci*	*0.001 Ci*	*0.003 Ci*
Am	*0.000 Ci*	*0.008 Ci*	*0.001 Ci*		*0.002 Ci*	*0.009 Ci*	*0.001 Ci*	*0.008 Ci*	*0.001 Ci*
Cs	*0.004 Ci*	*0.205 Ci*	*0.199 Ci*		*0.048 Ci*	*0.392 Ci*	*0.199 Ci*	*0.194 Ci*	*0.033 Ci*
Sr	*0.001 Ci*	*0.037 Ci*	*0.020 Ci*		*0.009 Ci*	*0.055 Ci*	*0.020 Ci*	*0.035 Ci*	*0.006 Ci*
PCB	*0.000 g*	*0.001 g*	*0.017 g*		*0.001 g*	*0.018 g*	*0.017 g*	*0.001 g*	*0.001 g*
RESINS									
Zeolite									
OIER	0.001 kg	1.326 kg	0.066 kg		0.079 kg	1.317 kg	0.066 kg	1.251 kg	0.003 kg
Pu	*0.000 Ci*	*0.000 Ci*	*0.003 Ci*		*0.001 Ci*	*0.003 Ci*	*0.003 Ci*	*0.000 Ci*	*0.001 Ci*
Am	*0.000 Ci*	*0.000 Ci*	*0.001 Ci*		*0.000 Ci*	*0.001 Ci*	*0.001 Ci*	*0.000 Ci*	*0.000 Ci*
Cs	*0.000 Ci*	*0.088 Ci*	*0.000 Ci*		*0.005 Ci*	*0.083 Ci*	*0.000 Ci*	*0.083 Ci*	*0.000 Ci*
TOTAL ACTIVITIES									
Total U	0.323 kg	0.231 kg	0.100 kg		115.357 kg	0.026 kg	0.009 kg	0.017 kg	114.820 kg
Total Pu	0.117 Ci	0.041 Ci	0.085 Ci		20.386 Ci	0.010 Ci	0.009 Ci	0.001 Ci	20.228 Ci
Total Am	0.079 Ci	0.048 Ci	0.033 Ci		23.661 Ci	0.010 Ci	0.002 Ci	0.008 Ci	23.542 Ci
TRU	**0.197 Ci**	**0.089 Ci**	**0.119 Ci**		**44.047 Ci**	**0.020 Ci**	**0.011 Ci**	**0.009 Ci**	**43.770 Ci**
Total Cs	0.954 Ci	0.631 Ci	0.711 Ci		219.598 Ci	0.476 Ci	0.199 Ci	0.277 Ci	218.291 Ci
Total Sr	0.689 Ci	0.493 Ci	0.215 Ci		246.572 Ci	0.055 Ci	0.020 Ci	0.035 Ci	245.425 Ci
Beta Gamma	**1.643 Ci**	**1.124 Ci**	**0.925 Ci**		**466.170 Ci**	**0.531 Ci**	**0.219 Ci**	**0.312 Ci**	**463.715 Ci**
CONCENTRATION									
PCB in liquid	0.25 ppb		0.06 ppb		9.61 ppb	0.00 ppb	0.00 ppb		10.66 ppb
PCB in solids	1.547 ppm	0.726 ppm	1.551 ppm		1.459 ppm	1.463 ppm	1.551 ppm	0.726 ppm	1.545 ppm
Solids	0.28 g/l	55.66 g/l	49.79 g/l		0.23 g/l	195.71 g/l	196.76 g/l	180.95 g/l	0.20 g/l
U	0.001 g/cm3	0.009 g/cm3	0.000 g/cm3		0.036 g/cm3	0.000 g/cm3	0.000 g/cm3	0.002 g/cm3	0.041 g/cm3
Pu total	**0.371 Ci/m3**	**1.680 Ci/m3**	**0.391 Ci/m3**		**6.392 Ci/m3**	**0.161 Ci/m3**	**0.166 Ci/m3**	**0.124 Ci/m3**	**7.162 Ci/m3**
238 Pu	0.074 Ci/m3	0.336 Ci/m3	0.078 Ci/m3		1.278 Ci/m3	0.032 Ci/m3	0.033 Ci/m3	0.025 Ci/m3	1.432 Ci/m3
239 Pu	0.149 Ci/m3	0.672 Ci/m3	0.156 Ci/m3		2.557 Ci/m3	0.065 Ci/m3	0.066 Ci/m3	0.050 Ci/m3	2.865 Ci/m3
240 Pu	0.149 Ci/m3	0.672 Ci/m3	0.156 Ci/m3		2.557 Ci/m3	0.065 Ci/m3	0.066 Ci/m3	0.050 Ci/m3	2.865 Ci/m3
Am	0.251 Ci/m3	1.941 Ci/m3	0.153 Ci/m3		7.419 Ci/m3	0.156 Ci/m3	0.031 Ci/m3	1.109 Ci/m3	8.335 Ci/m3
TRU	0.622 Ci/m3	3.621 Ci/m3	0.544 Ci/m3		13.812 Ci/m3	0.317 Ci/m3	0.197 Ci/m3	1.233 Ci/m3	15.497 Ci/m3
TRU	**560 nCi/g**	**3 306 nCi/g**	**457 nCi/g**		**11 601 nCi/g**	**278 nCi/g**	**172 nCi/g**	**1 170 nCi/g**	**12 827 nCi/g**
Beta Gamma	**5.200 Ci/m3**	**45.608 Ci/m3**	**4.237 Ci/m3**		**146.178 Ci/m3**	**8.571 Ci/m3**	**3.979 Ci/m3**	**43.663 Ci/m3**	**164.176 Ci/m3**

DETAILED STREAM DATA SHEET FOR ONE DAILY BATCH

STREAM KE2 Nominal Case : 1 Batch 160 kg solids	ST-408 TOTAL WATER USED FOR RESIN LEACHING AND WASHING	ST-409 TOTAL WATER FOR SOLIDS LEACHING AND WASHING	ST-410 SOLIDS FROM CENTRIFUGE	ST-501 TOTAL SOLUTION TO FILTRATION	ST-502 FILTER RINSING WATER	ST-503 TOTAL SOLUTION TO ADJUST	ST-504 RINSED FILTER TO CONDITIONING	ST-505 GROUT FORMERS FOR FILTER CONDITIONING	ST-506 CONDITIONED FILTERS
Volume	*0.014 m3*	*0.190 m3*	*0.046 m3*	*3.189 m3*	*0.027 m3*	*3.193 m3*	*0.001 m3*		*0.001 m3*
Density	*1.000*	*1.000*	*1.181*	*1.191*	*1.000*	*1.197*	*1.644*		*1.660*
Total Mass	14.039 kg	190.339 kg	54.574 kg	3,796.712 kg	26.876 kg	3,822.252 kg	1.337 kg		1.337 kg
Number of packages							0.051		0.051
LIQUID									
Volume	*0.014 m3*	*0.190 m3*	*0.043 m3*	*3.189 m3*	*0.027 m3*	*3.192 m3*	*0.001 m3*		*0.001 m3*
Density	*1.000*	*1.000*	*1.007*	*1.190*	*1.000*	*1.197*	*1.067*		*1.080*
Total Mass Liquid + Gaz	14.039 kg	190.339 kg	43.652 kg	3,795.969 kg	26.876 kg	3,822.177 kg	0.669 kg		0.669 kg
H2O	14.039 kg	190.339 kg	43.181 kg	2,547.038 kg	26.876 kg	2,573.333 kg	0.581 kg		0.581 kg
HNO3			0.370 kg	993.674 kg		993.604 kg	0.070 kg		0.070 kg
H2C2O4				0.250 kg		0.250 kg	0.000 kg		0.000 kg
HF				1.049 kg		1.049 kg	0.000 kg		0.000 kg
NaOH									
Al(NO3)3			0.015 kg	37.695 kg		37.692 kg	0.003 kg		0.003 kg
AlF3									
Fe(NO3)3			0.010 kg	23.838 kg		23.836 kg	0.002 kg		0.002 kg
CaO			0.000 kg	0.118 kg		0.118 kg	0.000 kg		0.000 kg
NaNO2									
NaNO3									
Miscellaneous			0.001 kg	1.346 kg		1.346 kg	0.000 kg		0.000 kg
UO2(NO3)2			0.076 kg	190.963 kg		190.949 kg	0.013 kg		0.013 kg
Pu			*0.008 Ci*	*20.381 Ci*		*20.380 Ci*	*0.001 Ci*		*0.001 Ci*
Am			*0.009 Ci*	*23.659 Ci*		*23.658 Ci*	*0.002 Ci*		*0.002 Ci*
Cs			*0.087 Ci*	*219.545 Ci*		*219.530 Ci*	*0.015 Ci*		*0.015 Ci*
Sr			*0.098 Ci*	*246.563 Ci*		*246.546 Ci*	*0.017 Ci*		*0.017 Ci*
PCB			*0.000 g*	*0.036 g*		*0.002 g*	*0.000 g*		*0.000 g*
GAZ									
NO2									
NO									
PCB									
SOLIDS + RESINS									
Volume			*0.003 m3*	*0.000 m3*		*0.000 m3*	*0.000 m3*		*0.000 m3*
Density			*3.835*	*3.582*		*3.582*	*3.582*		*3.582*
Total Mass Solids + Resins			10.922 kg	0.743 kg		0.074 kg	0.669 kg		0.669 kg
Wt% solids	*0.00 wt%*	*0.00 wt%*	*20.01 wt%*	*0.02 wt%*	*0.00 wt%*	*0.00 wt%*	*50.00 wt%*	*0.00 wt%*	*50.00 wt%*
Al(NO3)3									
Al(OH)3			0.132 kg	0.008 kg		0.001 kg	0.007 kg		0.007 kg
Al2O3									
Fe(NO3)3									
FeOOH			0.083 kg	0.005 kg		0.001 kg	0.005 kg		0.005 kg
C			0.178 kg	0.011 kg		0.001 kg	0.010 kg		0.010 kg
CaO			0.012 kg	0.001 kg		0.000 kg	0.001 kg		0.001 kg
Na2C2O4									
CO2									
H2O									
SiO2			6.396 kg	0.390 kg		0.039 kg	0.351 kg		0.351 kg
Grout									
Miscellaneous			0.013 kg	0.001 kg		0.000 kg	0.001 kg		0.001 kg
Zircaloy			3.985 kg	0.243 kg		0.024 kg	0.219 kg		0.219 kg
Grafoil									
HNO3									
H2C2O4									
Na2U2O7									
U			0.029 kg	0.002 kg		0.000 kg	0.002 kg		0.002 kg
U3O7			0.009 kg	0.001 kg		0.000 kg	0.001 kg		0.001 kg
UH3			0.002 kg	0.000 kg		0.000 kg	0.000 kg		0.000 kg
UO2			0.018 kg	0.001 kg		0.000 kg	0.001 kg		0.001 kg
UO2(NO3)2									
UO4-4H2O									
Pu			*0.058 Ci*	*0.003 Ci*		*0.000 Ci*	*0.003 Ci*		*0.003 Ci*
Am			*0.022 Ci*	*0.002 Ci*		*0.000 Ci*	*0.002 Ci*		*0.002 Ci*
Cs			*0.622 Ci*	*0.048 Ci*		*0.005 Ci*	*0.043 Ci*		*0.043 Ci*
Sr			*0.116 Ci*	*0.009 Ci*		*0.001 Ci*	*0.008 Ci*		*0.008 Ci*
PCB			*0.017 g*	*0.001 g*		*0.000 g*	*0.036 g*		*0.036 g*
RESINS									
Zeolite									
OIER			0.066 kg	0.079 kg		0.008 kg	0.071 kg		0.071 kg
Pu			*0.020 Ci*	*0.001 Ci*		*0.000 Ci*	*0.001 Ci*		*0.001 Ci*
Am			*0.002 Ci*	*0.000 Ci*		*0.000 Ci*	*0.000 Ci*		*0.000 Ci*
Cs			*0.001 Ci*	*0.005 Ci*		*0.001 Ci*	*0.005 Ci*		*0.005 Ci*
TOTAL ACTIVITIES									
Total U			0.100 kg	115.357 kg		115.345 kg	0.012 kg		0.012 kg
Total Pu			0.085 Ci	20.386 Ci		20.380 Ci	0.006 Ci		0.006 Ci
Total Am			0.033 Ci	23.661 Ci		23.658 Ci	0.003 Ci		0.003 Ci
TRU			0.119 Ci	44.047 Ci		44.038 Ci	0.009 Ci		0.009 Ci
Total Cs			0.711 Ci	219.598 Ci		219.535 Ci	0.063 Ci		0.063 Ci
Total Sr			0.215 Ci	246.572 Ci		246.547 Ci	0.025 Ci		0.025 Ci
Beta Gamma			0.925 Ci	466.170 Ci		466.081 Ci	0.089 Ci		0.089 Ci
CONCENTRATION									
PCB in liquid			0.33 ppb	9.61 ppb		0.48 ppb	3.84 ppb		3.84 ppb
PCB in solids			1.545 ppm	1.459 ppm		1.459 ppm	53.257 ppm		53.257 ppm
Solids			236.34 g/l	0.23 g/l		0.02 g/l	822.09 g/l		829.88 g/l
U			0.002 g/cm3	0.036 g/cm3		0.036 g/cm3	0.015 g/cm3		0.015 g/cm3
Pu total			1.848 Ci/m3	6.392 Ci/m3		6.384 Ci/m3	6.806 Ci/m3		6.871 Ci/m3
238 Pu			0.370 Ci/m3	1.278 Ci/m3		1.277 Ci/m3	1.361 Ci/m3		1.374 Ci/m3
239 Pu			0.739 Ci/m3	2.557 Ci/m3		2.554 Ci/m3	2.722 Ci/m3		2.748 Ci/m3
240 Pu			0.739 Ci/m3	2.557 Ci/m3		2.554 Ci/m3	2.722 Ci/m3		2.748 Ci/m3
Am			0.723 Ci/m3	7.419 Ci/m3		7.410 Ci/m3	4.117 Ci/m3		4.156 Ci/m3
TRU			2.571 Ci/m3	13.812 Ci/m3		13.794 Ci/m3	10.923 Ci/m3		11.026 Ci/m3
TRU			2 177 nCi/g	11 601 nCi/g		11 522 nCi/g	6 643 nCi/g		6 643 nCi/g
Beta Gamma			20.022 Ci/m3	146.178 Ci/m3		145.992 Ci/m3	109.202 Ci/m3		110.237 Ci/m3

DETAILED STREAM DATA SHEET FOR ONE DAILY BATCH

STREAM KE2 Nominal Case : 1 Batch 160 kg solids	ST-601 SOLUTION BEFORE NEUTRALIZATION	ST-602 UO2(NO3)2 ADDITION SOLUTION	ST-603 FE(NO3)3 / AL(NO3)3 ADDITION SOLUTION	ST-604 FINAL SOLUTION SENT TO TWRS	ST-605 NANO2 ADDITION SOLUTION	ST-607 NAOH ADDITION SOLUTION	ST-608 WATER ADJUSTMENT	ST-701 RESINS + SOLID SOLUTION AFTER DECANTATION	ST-702 SUPERNATE TO ELIMINATE
Volume	*4.292 m3*	*0.016 m3*	*0.994 m3*	*8.896 m3*	*0.975 m3*	*1.391 m3*	*2.144 m3*		
Density	*1.203*	*1.323*	*1.328*	*1.178*	*1.251*	*1.403*	*1.000*		
Total Mass	5,163.395 kg	20.963 kg	1,320.180 kg	10,478.476 kg	1,219.750 kg	1,951.257 kg	2,144.074 kg		
Number of packages									
LIQUID									
Volume	*4.292 m3*	*0.016 m3*	*0.994 m3*	*8.766 m3*	*0.975 m3*	*1.391 m3*	*2.144 m3*		
Density	*1.203*	*1.323*	*1.328*	*1.155*	*1.251*	*1.403*	*1.000*	*1.000*	*1.000*
Total Mass Liquid + Gaz	5,163.321 kg	20.963 kg	1,320.180 kg	10,121.526 kg	1,219.750 kg	1,951.257 kg	2,144.074 kg		
H2O	3,427.382 kg	14.720 kg	839.329 kg	7,533.580 kg	731.850 kg	894.268 kg	2,144.074 kg		
HNO3	993.604 kg								
H2C2O4	0.250 kg								
HF	1.049 kg								
NaOH				94.200 kg		1,056.989 kg			
Al(NO3)3	37.892 kg								
AlF3				1.469 kg					
Fe(NO3)3	504.688 kg		480.852 kg						
CaO	0.118 kg			0.118 kg					
NaNO2				487.900 kg	487.900 kg				
NaNO3				2,002.914 kg					
Miscellaneous	1.346 kg			1.346 kg					
UO2(NO3)2	197.192 kg	6.243 kg							
Pu	*20.380 Ci*								
Am	*23.658 Ci*								
Cs	*219.530 Ci*			*219.530 Ci*					
Sr	*246.546 Ci*								
PCB	*0.002 g*			*0.000 g*					
GAZ									
NO2									
NO									
PCB									
SOLIDS + RESINS									
Volume	*0.000 m3*			*0.129 m3*					
Density	*3.582*			*2.757*					
Total Mass Solids + Resins	0.074 kg			356.950 kg					
Wt% solids	*0.00 wt%*	*0.00 wt%*	*0.00 wt%*	*3.41 wt%*	*0.00 wt%*	*0.00 wt%*	*0.00 wt%*	*0.00 wt%*	*0.00 wt%*
Al(NO3)3									
Al(OH)3	0.001 kg			12.440 kg					
Al2O3									
Fe(NO3)3									
FeOOH	0.001 kg			185.411 kg					
C	0.001 kg			0.001 kg					
CaO	0.000 kg			0.000 kg					
Na2C2O4				0.372 kg					
CO2									
H2O									
SiO2	0.039 kg			0.039 kg					
Grout									
Miscellaneous	0.000 kg			0.000 kg					
Zircaloy	0.024 kg			0.024 kg					
Grafoil									
HNO3									
H2C2O4									
Na2U2O7				158.655 kg					
U	0.000 kg			0.000 kg					
U3O7	0.000 kg			0.000 kg					
UH3	0.000 kg			0.000 kg					
UO2	0.000 kg			0.000 kg					
UO2(NO3)2									
UO4-4H2O									
Pu	*0.000 Ci*			*20.380 Ci*					
Am	*0.000 Ci*			*23.658 Ci*					
Cs	*0.005 Ci*			*0.005 Ci*					
Sr	*0.001 Ci*			*246.547 Ci*					
PCB	*0.000 g*			*0.002 g*					
RESINS									
Zeolite									
OIER	0.008 kg			0.008 kg					
Pu	*0.000 Ci*			*0.000 Ci*					
Am	*0.000 Ci*			*0.000 Ci*					
Cs	*0.001 Ci*			*0.001 Ci*					
TOTAL ACTIVITIES									
Total U	119.117 kg	3.771 kg		119.117 kg					
Total Pu	20.380 Ci			20.380 Ci					
Total Am	23.658 Ci			23.658 Ci					
TRU	44.038 Ci			44.038 Ci					
Total Cs	219.535 Ci			219.535 Ci					
Total Sr	246.547 Ci			246.547 Ci					
Beta Gamma	466.081 Ci			466.081 Ci					
CONCENTRATION									
PCB in liquid	0.35 ppb			0.01 ppb					
PCB in solids	1.459 ppm			0.005 ppm					
Solids	0.02 g/l			40.13 g/l					
U	0.028 g/cm3	0.238 g/cm3		0.013 g/cm3					
Pu total	4.748 Ci/m3			2.291 Ci/m3					
238 Pu	0.950 Ci/m3			0.458 Ci/m3					
239 Pu	1.899 Ci/m3			0.916 Ci/m3					
240 Pu	1.899 Ci/m3			0.916 Ci/m3					
Am	5.512 Ci/m3			2.659 Ci/m3					
TRU	10.260 Ci/m3			4.951 Ci/m3					
TRU	8 529 nCi/g			4 203 nCi/g					
Beta Gamma	108.585 Ci/m3			52.394 Ci/m3					

DETAILED STREAM DATA SHEET FOR ONE DAILY BATCH

STREAM KE2 Nominal Case : 1 Batch 160 kg solids	ST-703 GROUT FORMERS	ST-704 FINAL GROUT WASTES TO ERDF	ST-801 ADDED WATER TO OFF-GAS TREATMENT
Volume			*0.101 m3*
Density			*1.000*
Total Mass			100.603 kg
Number of packages			
LIQUID			
Volume			*0.101 m3*
Density			*1.000*
Total Mass Liquid + Gaz			100.603 kg
H2O			100.603 kg
HNO3			
H2C2O4			
HF			
NaOH			
Al(NO3)3			
AlF3			
Fe(NO3)3			
CaO			
NaNO2			
NaNO3			
Miscellaneous			
UO2(NO3)2			
Pu			
Am			
Cs			
Sr			
PCB			
GAZ			
NO2			
NO			
PCB			
SOLIDS + RESINS			
Volume			
Density			
Total Mass Solids + Resins			
Wt% solids	*0.00 wt%*	*0.00 wt%*	*0.00 wt%*
Al(NO3)3			
Al(OH)3			
Al2O3			
Fe(NO3)3			
FeOOH			
C			
CaO			
Na2C2O4			
CO2			
H2O			
SiO2			
Grout			
Miscellaneous			
Zircaloy			
Grafoil			
HNO3			
H2C2O4			
Na2U2O7			
U			
U3O7			
UH3			
UO2			
UO2(NO3)2			
UO4-4H2O			
Pu			
Am			
Cs			
Sr			
PCB			
RESINS			
Zeolite			
OIER			
Pu			
Am			
Cs			
TOTAL ACTIVITIES			
Total U			
Total Pu			
Total Am			
TRU			
Total Cs			
Total Sr			
Beta Gamma			
CONCENTRATION			
PCB in liquid			
PCB in solids			
Solids			
U			
Pu total			
238 Pu			
239 Pu			
240 Pu			
Am			
TRU			
TRU			
Beta Gamma			

DETAILED STREAM DATA SHEET FOR THE WHOLE STREAM

STREAM KE2 Nominal Case - TOTAL STREAM	ST-101 SLUDGE AT INLET OF TREATMENT UNIT	ST-102 WATER ADDITION FOR SCREEN WASHING	ST-103 SLUDGE STREAM FROM RESIN SEPARATION	ST-104 RESIN STREAM FROM RESIN SEPARATION	ST-201 SLUDGE TO DISSOLVER	ST-202 RECYCLED NITRIC ACID	ST-203 HNO3 FOR DISSOLUTION	ST-204 DISSOLUTION OFF-GAS	ST-205 DISSOLUTION SOLUTION
Volume	*28.999 m3*	*0.161 m3*	*28.993 m3*	*0.173 m3*	*28.993 m3*	*3.291 m3*	*30.498 m3*	*422.999 m3*	*59.789 m3*
Density	*1.124*	*1.000*	*1.122*	*1.162*	*1.122*	*1.125*	*1.278*	*0.002*	*1.247*
Total Mass	32,581.114 kg	160.610 kg	32,540.961 kg	200.762 kg	32,540.961 kg	3,702.299 kg	38,976.693 kg	698.680 kg	74,542.213 kg
Number of packages									
LIQUID									
Volume	*28.671 m3*	*0.161 m3*	*28.671 m3*	*0.161 m3*	*28.671 m3*	*3.291 m3*	*30.498 m3*	*422.999 m3*	*59.716 m3*
Density	*1.000*	*1.000*	*1.000*	*1.000*	*1.000*	*1.125*	*1.278*	*0.002*	*1.244*
Total Mass Liquid + Gaz	28,671.380 kg	160.610 kg	28,671.380 kg	160.610 kg	28,671.380 kg	3,702.299 kg	38,976.693 kg	698.680 kg	74,259.862 kg
H2O	28,671.380 kg	160.610 kg	28,671.380 kg	160.610 kg	28,671.380 kg	2,458.326 kg	13,614.394 kg		45,464.270 kg
HNO3						1,243.972 kg	25,362.299 kg		22,603.148 kg
H2C2O4									
HF									
NaOH									
Al(NO3)3									919.426 kg
AlF3									
Fe(NO3)3									581.446 kg
CaO									2.868 kg
NaNO2									
NaNO3									
Miscellaneous									32.823 kg
UO2(NO3)2									4,655.882 kg
Pu									*495.380 Ci*
Am									*576.630 Ci*
Cs									*5,346.184 Ci*
Sr									*6,011.481 Ci*
PCB									*0.891 g*
GAZ									
NO2								305.647 kg	
NO								393.033 kg	
PCB								*0.291 g*	
SOLIDS + RESINS									
Volume	*0.327 m3*		*0.321 m3*	*0.012 m3*	*0.321 m3*				*0.074 m3*
Density	*11.950*		*12.040*	*3.293*	*12.040*				*3.835*
Total Mass Solids + Resins	3,909.734 kg		3,869.581 kg	40.152 kg	3,869.581 kg				282.350 kg
Wt% solids	*12.00 wt%*	*0.00 wt%*	*11.89 wt%*	*20.00 wt%*	*11.89 wt%*	*0.00 wt%*	*0.00 wt%*	*0.00 wt%*	*0.38 wt%*
Al(NO3)3									
Al(OH)3	340.774 kg		340.092 kg	0.682 kg	340.092 kg				3.401 kg
Al2O3									
Fe(NO3)3									
FeOOH	216.200 kg		215.767 kg	0.432 kg	215.767 kg				2.158 kg
C	4.598 kg		4.589 kg	0.009 kg	4.589 kg				4.589 kg
CaO	3.193 kg		3.187 kg	0.006 kg	3.187 kg				0.319 kg
Na2C2O4									
CO2	14.873 kg		14.843 kg	0.030 kg	14.843 kg				
H2O									
SiO2	165.676 kg		165.345 kg	0.331 kg	165.345 kg				165.345 kg
Grout									
Miscellaneous	33.220 kg		33.154 kg	0.066 kg	33.154 kg				0.332 kg
Zircaloy	103.215 kg		103.009 kg	0.206 kg	103.009 kg				103.009 kg
Grafoil									
HNO3									
H2C2O4									
Na2U2O7									
U	1,510.718 kg		1,507.697 kg	3.021 kg	1,507.697 kg				0.754 kg
U3O7	480.836 kg		479.874 kg	0.962 kg	479.874 kg				0.240 kg
UH3	90.470 kg		90.289 kg	0.181 kg	90.289 kg				0.045 kg
UO2	911.854 kg		910.030 kg	1.824 kg	910.030 kg				0.455 kg
UO2(NO3)2									
UO4-4H2O									
Pu	*498.374 Ci*		*497.377 Ci*	*0.997 Ci*	*497.377 Ci*				*1.492 Ci*
Am	*578.406 Ci*		*577.249 Ci*	*1.157 Ci*	*577.249 Ci*				*0.577 Ci*
Cs	*5,372.795 Ci*		*5,362.049 Ci*	*10.746 Ci*	*5,362.049 Ci*				*16.086 Ci*
Sr	*6,026.542 Ci*		*6,014.489 Ci*	*12.053 Ci*	*6,014.489 Ci*				*3.007 Ci*
PCB	*2.369 g*		*2.345 g*	*0.024 g*	*2.345 g*				*0.436 g*
RESINS									
Zeolite									
OIER	34.106 kg		1.705 kg	32.401 kg	1.705 kg				1.705 kg
Pu	*0.016 Ci*		*0.001 Ci*	*0.015 Ci*	*0.001 Ci*				*0.506 Ci*
Am	*0.013 Ci*		*0.001 Ci*	*0.012 Ci*	*0.001 Ci*				*0.043 Ci*
Cs	*4.911 Ci*		*0.246 Ci*	*4.666 Ci*	*0.246 Ci*				*0.025 Ci*
TOTAL ACTIVITIES									
Total U	2,819.482 kg		2,813.843 kg	5.639 kg	2,813.843 kg				2,813.843 kg
Total Pu	498.390 Ci		497.378 Ci	1.012 Ci	497.378 Ci				497.378 Ci
Total Am	578.419 Ci		577.250 Ci	1.169 Ci	577.250 Ci				577.250 Ci
TRU	1 076.808 Ci		1 074.628 Ci	2.181 Ci	1 074.628 Ci				1 074.628 Ci
Total Cs	5 377.706 Ci		5 362.295 Ci	15.411 Ci	5 362.295 Ci				5 362.295 Ci
Total Sr	6 026.542 Ci		6 014.489 Ci	12.053 Ci	6 014.489 Ci				6 014.489 Ci
Beta Gamma	11 404.248 Ci		11 376.784 Ci	27.464 Ci	11 376.784 Ci				11 376.784 Ci
CONCENTRATION									
PCB in liquid									12.00 ppb
PCB in solids	0.606 ppm		0.606 ppm	0.606 ppm	0.606 ppm				1.545 ppm
Solids	134.83 g/l		133.47 g/l	232.36 g/l	17.16 g/l				4.72 g/l
U	0.097 g/cm3		0.097 g/cm3	0.033 g/cm3	0.097 g/cm3				0.047 g/cm3
Pu total	17.187 Ci/m3		17.155 Ci/m3	5.855 Ci/m3	17.155 Ci/m3				8.319 Ci/m3
238 Pu	3.437 Ci/m3		3.431 Ci/m3	1.171 Ci/m3	3.431 Ci/m3				1.664 Ci/m3
239 Pu	6.875 Ci/m3		6.862 Ci/m3	2.342 Ci/m3	6.862 Ci/m3				3.328 Ci/m3
240 Pu	6.875 Ci/m3		6.862 Ci/m3	2.342 Ci/m3	6.862 Ci/m3				3.328 Ci/m3
Am	19.946 Ci/m3		19.910 Ci/m3	6.764 Ci/m3	19.910 Ci/m3				9.655 Ci/m3
TRU	37.133 Ci/m3		37.065 Ci/m3	12.619 Ci/m3	37.065 Ci/m3				17.974 Ci/m3
TRU	33 050 nCi/g		33 024 nCi/g	10 862 nCi/g	33 024 nCi/g				14 416 nCi/g
Beta Gamma	393.269 Ci/m3		392.401 Ci/m3	158.937 Ci/m3	392.401 Ci/m3				190.281 Ci/m3

DETAILED STREAM DATA SHEET FOR THE WHOLE STREAM

STREAM KE2 Nominal Case - TOTAL STREAM	ST-205 DISSOLVER WASHING WATER	ST-301 RESIN STREAM TO LEACHING	ST-302 TOTAL REAGENTS FOR RESINS AND SOLIDS LEACHING	ST-303 TOTAL OXALIC USED FOR RESIN LEACHING AND WASHING	ST-304 TOTAL HF USED FOR SOLIDS LEACHING AND WASHING	ST-305 TOTAL HNO3 USED FOR RESINS AND SOLIDS LEACHING	ST-306 TOTAL HNO3 USED FOR RESIN LEACHING AND WASHING	ST-307 TOTAL HNO3 USED FOR SOLIDS LEACHING AND WASHING	ST-308 TOTAL CLARIFIED SOLUTION FROM RESIN LEACHING
Volume	*9.286 m3*	*0.173 m3*	*4.710 m3*	*0.302 m3*	*2.378 m3*	*2.030 m3*	*0.100 m3*	*1.930 m3*	*0.770 m3*
Density	*1.000*	*1.162*	*1.164*	*1.100*	*1.075*	*1.278*	*1.278*	*1.278*	*1.062*
Total Mass	**9,285.617 kg**	**200.762 kg**	**5,482.467 kg**	**332.249 kg**	**2,556.201 kg**	**2,594.017 kg**	**127.760 kg**	**2,466.257 kg**	**818.344 kg**
Number of packages									
LIQUID									
Volume	*9.286 m3*	*0.161 m3*	*4.710 m3*	*0.302 m3*	*2.378 m3*	*2.030 m3*	*0.100 m3*	*1.930 m3*	*0.769 m3*
Density	*1.000*	*1.000*	*1.164*	*1.100*	*1.075*	*1.278*	*1.278*	*1.278*	*1.062*
Total Mass Liquid + Gaz	**9,285.617 kg**	**160.610 kg**	**5,482.467 kg**	**332.249 kg**	**2,556.201 kg**	**2,594.017 kg**	**127.760 kg**	**2,466.257 kg**	**816.446 kg**
H2O	9,285.617 kg	160.610 kg	3,762.763 kg	326.140 kg	2,530.543 kg	906.079 kg	44.626 kg	861.453 kg	723.239 kg
HNO3			1,687.938 kg			1,687.938 kg	83.134 kg	1,604.804 kg	75.680 kg
H2C2O4			6.109 kg	6.109 kg					6.103 kg
HF			25.658 kg		25.658 kg				
NaOH									
Al(NO3)3									1.673 kg
AlF3									
Fe(NO3)3									1.058 kg
CaO									0.005 kg
NaNO2									
NaNO3									
Miscellaneous									0.060 kg
UO2(NO3)2									8.627 kg
Pu									*0.989 Ci*
Am									*0.963 Ci*
Cs									*8.239 Ci*
Sr									*11.139 Ci*
PCB									
GAZ									
NO2									
NO									
PCB									
SOLIDS + RESINS									
Volume		*0.012 m3*							*0.001 m3*
Density		*3.293*							*1.429*
Total Mass Solids + Resins		**40.152 kg**							**1.898 kg**
Wt% solids	*0.00 wt%*	*20.00 wt%*	*0.00 wt%*	*0.00 wt%*	*0.00 wt%*	*0.00 wt%*	*0.00 wt%*	*0.00 wt%*	*0.23 wt%*
Al(NO3)3									
Al(OH)3		0.682 kg							0.004 kg
Al2O3									
Fe(NO3)3									
FeOOH		0.432 kg							0.002 kg
C		0.009 kg							0.001 kg
CaO		0.006 kg							0.000 kg
Na2C2O4									
CO2		0.030 kg							
H2O									
SiO2		0.331 kg							0.019 kg
Grout									
Miscellaneous		0.066 kg							0.000 kg
Zircaloy		0.206 kg							0.012 kg
Grafoil									
HNO3									
H2C2O4									
Na2U2O7									
U		3.021 kg							0.013 kg
U3O7		0.962 kg							0.004 kg
UH3		0.181 kg							0.001 kg
UO2		1.824 kg							0.008 kg
UO2(NO3)2									
UO4-4H2O									
Pu		*0.997 Ci*							*0.001 Ci*
Am		*1.157 Ci*							*0.011 Ci*
Cs		*10.746 Ci*							*0.284 Ci*
Sr		*12.053 Ci*							*0.051 Ci*
PCB		*0.024 g*							*0.001 g*
RESINS									
Zeolite									
OIER		32.401 kg							1.835 kg
Pu		*0.015 Ci*							*0.000 Ci*
Am		*0.012 Ci*							*0.000 Ci*
Cs		*4.666 Ci*							*0.122 Ci*
TOTAL ACTIVITIES									
Total U		5.639 kg							5.235 kg
Total Pu		1.012 Ci							0.990 Ci
Total Am		1.169 Ci							0.975 Ci
TRU		**2.181 Ci**							**1.965 Ci**
Total Cs		15.411 Ci							8.645 Ci
Total Sr		12.053 Ci							11.190 Ci
Beta Gamma		**27.464 Ci**							**19.835 Ci**
CONCENTRATION									
PCB in liquid									
PCB in solids		0.606 ppm							0.726 ppm
Solids		232.36 g/l							2.46 g/l
U		0.033 g/cm3							0.007 g/cm3
Pu total		**5.855 Ci/m3**							**1.285 Ci/m3**
238 Pu		1.171 Ci/m3							0.257 Ci/m3
239 Pu		2.342 Ci/m3							0.514 Ci/m3
240 Pu		2.342 Ci/m3							0.514 Ci/m3
Am		6.764 Ci/m3							1.266 Ci/m3
TRU		12.619 Ci/m3							2.551 Ci/m3
TRU		**10 862 nCi/g**							**2 401 nCi/g**
Beta Gamma		**158.937 Ci/m3**							**25.748 Ci/m3**

STREAM KE2 Nominal Case - TOTAL STREAM	ST-309 TOTAL SOLIDS LEACHING EFFLUENT	ST-310 LEACHED RESINS	ST-311 LEACHED SOLIDS	ST-401 TOTAL WATER USED FOR RESINS AND SOLIDS WASHING	ST-402 TOTAL SOLUTION FROM CENTRIFUGE	ST-403 RESINS + SOLID RESIDUES FROM LEACHING	ST-404 FINAL DECLOGGING (SOLIDS)	ST-405 FINAL DECLOGGING (RESIN)	ST-407 DISSOLUTION SOLUTION AFTER CENTRIFUGE
Volume	*7.722 m3*	*0.602 m3*	*5.337 m3*	*4.994 m3*	*77.928 m3*	*1.515 m3*	*1.346 m3*	*0.175 m3*	*69.019 m3*
Density	*1.111*	*1.095*	*1.191*	*1.000*	*1.191*	*1.140*	*1.146*	*1.054*	*1.208*
Total Mass	8,576.717 kg	659.512 kg	6,355.767 kg	4,994.144 kg	92,775.837 kg	1,727.848 kg	1,543.619 kg	184.229 kg	83,380.775 kg
Number of packages									
LIQUID									
Volume	*7.721 m3*	*0.579 m3*	*5.267 m3*	*4.994 m3*	*77.923 m3*	*1.431 m3*	*1.277 m3*	*0.153 m3*	*69.015 m3*
Density	*1.110*	*1.082*	*1.156*	*1.000*	*1.190*	*1.000*	*1.002*	*1.000*	*1.208*
Total Mass Liquid + Gaz	8,574.580 kg	625.995 kg	6,090.047 kg	4,994.144 kg	92,757.683 kg	1,431.306 kg	1,278.696 kg	152.610 kg	83,366.658 kg
H2O	6,875.347 kg	532.701 kg	4,447.322 kg	4,994.144 kg	62,238.993 kg	1,429.893 kg	1,277.370 kg	152.523 kg	54,640.407 kg
HNO3	1,656.860 kg	75.751 kg	1,612.765 kg		24,281.258 kg	1.372 kg	1.301 kg	0.071 kg	22,548.718 kg
H2C2O4		6.109 kg			6.103 kg	0.006 kg		0.006 kg	
HF	25.637 kg		25.658 kg		25.637 kg	0.021 kg	0.021 kg		
NaOH									
Al(NO3)3	2.214 kg	1.675 kg	0.367 kg		921.099 kg	0.002 kg	0.000 kg	0.002 kg	917.212 kg
AlF3									
Fe(NO3)3	1.400 kg	1.059 kg	0.232 kg		582.504 kg	0.001 kg	0.000 kg	0.001 kg	580.046 kg
CaO	0.007 kg	0.005 kg	0.001 kg		2.873 kg	0.000 kg	0.000 kg	0.000 kg	2.861 kg
NaNO2									
NaNO3									
Miscellaneous	0.079 kg	0.060 kg	0.013 kg		32.882 kg	0.000 kg	0.000 kg	0.000 kg	32.743 kg
UO2(NO3)2	13.036 kg	8.635 kg	3.688 kg		4,666.333 kg	0.011 kg	0.003 kg	0.008 kg	4,644.671 kg
Pu	*2.858 Ci*	*0.990 Ci*	*1.865 Ci*		*498.034 Ci*	*0.002 Ci*	*0.002 Ci*	*0.001 Ci*	*494.187 Ci*
Am	*1.932 Ci*	*0.964 Ci*	*0.775 Ci*		*578.137 Ci*	*0.002 Ci*	*0.001 Ci*	*0.001 Ci*	*575.241 Ci*
Cs	*23.216 Ci*	*8.247 Ci*	*12.489 Ci*		*5,364.766 Ci*	*0.018 Ci*	*0.010 Ci*	*0.008 Ci*	*5,333.310 Ci*
Sr	*16.831 Ci*	*11.149 Ci*	*4.762 Ci*		*6,024.975 Ci*	*0.014 Ci*	*0.004 Ci*	*0.010 Ci*	*5,997.005 Ci*
PCB	*0.002 g*		*0.000 g*		*0.891 g*	*0.000 g*	*0.000 g*		*0.889 g*
GAZ									
NO2									
NO									
PCB									
SOLIDS + RESINS									
Volume	*0.001 m3*	*0.023 m3*	*0.070 m3*		*0.005 m3*	*0.084 m3*	*0.070 m3*	*0.022 m3*	*0.004 m3*
Density	*3.818*	*1.429*	*3.787*		*3.592*	*3.536*	*3.787*	*1.429*	*3.835*
Total Mass Solids + Resins	2.138 kg	33.517 kg	265.720 kg		18.153 kg	296.541 kg	264.923 kg	31.618 kg	14.118 kg
Wt% solids	*0.02 wt%*	*5.08 wt%*	*4.18 wt%*	*0.00 wt%*	*0.02 wt%*	*17.16 wt%*	*17.16 wt%*	*17.16 wt%*	*0.02 wt%*
Al(NO3)3									
Al(OH)3	0.026 kg	0.068 kg	3.215 kg		0.200 kg	3.269 kg	3.205 kg	0.064 kg	0.170 kg
Al2O3									
Fe(NO3)3									
FeOOH	0.016 kg	0.043 kg	2.040 kg		0.127 kg	2.074 kg	2.033 kg	0.041 kg	0.108 kg
C	0.035 kg	0.009 kg	4.338 kg		0.265 kg	4.333 kg	4.325 kg	0.009 kg	0.229 kg
CaO	0.002 kg	0.001 kg	0.301 kg		0.018 kg	0.302 kg	0.300 kg	0.001 kg	0.016 kg
Na2C2O4									
CO2									
H2O									
SiO2	1.254 kg	0.331 kg	156.292 kg		9.540 kg	156.136 kg	155.824 kg	0.313 kg	8.267 kg
Grout									
Miscellaneous	0.003 kg	0.007 kg	0.313 kg		0.019 kg	0.319 kg	0.312 kg	0.006 kg	0.017 kg
Zircaloy	0.781 kg	0.206 kg	97.369 kg		5.943 kg	97.272 kg	97.077 kg	0.195 kg	5.150 kg
Grafoil									
HNO3									
H2C2O4									
Na2U2O7									
U	0.004 kg	0.227 kg	0.121 kg		0.054 kg	0.335 kg	0.121 kg	0.214 kg	0.038 kg
U3O7	0.001 kg	0.072 kg	0.039 kg		0.017 kg	0.106 kg	0.038 kg	0.068 kg	0.012 kg
UH3	0.000 kg	0.014 kg	0.007 kg		0.003 kg	0.020 kg	0.007 kg	0.013 kg	0.002 kg
UO2	0.002 kg	0.137 kg	0.073 kg		0.033 kg	0.202 kg	0.073 kg	0.129 kg	0.023 kg
UO2(NO3)2									
UO4-4H2O									
Pu	*0.008 Ci*	*0.020 Ci*	*0.155 Ci*		*0.083 Ci*	*0.173 Ci*	*0.155 Ci*	*0.019 Ci*	*0.075 Ci*
Am	*0.003 Ci*	*0.200 Ci*	*0.027 Ci*		*0.043 Ci*	*0.216 Ci*	*0.027 Ci*	*0.189 Ci*	*0.029 Ci*
Cs	*0.091 Ci*	*5.018 Ci*	*4.866 Ci*		*1.180 Ci*	*9.585 Ci*	*4.851 Ci*	*4.734 Ci*	*0.804 Ci*
Sr	*0.016 Ci*	*0.904 Ci*	*0.483 Ci*		*0.217 Ci*	*1.335 Ci*	*0.482 Ci*	*0.853 Ci*	*0.150 Ci*
PCB	*0.003 g*	*0.024 g*	*0.412 g*		*0.026 g*	*0.434 g*	*0.411 g*	*0.023 g*	*0.022 g*
RESINS									
Zeolite									
OIER	0.013 kg	32.401 kg	1.612 kg		1.933 kg	32.173 kg	1.607 kg	30.566 kg	0.085 kg
Pu	*0.003 Ci*	*0.002 Ci*	*0.067 Ci*		*0.028 Ci*	*0.069 Ci*	*0.067 Ci*	*0.002 Ci*	*0.025 Ci*
Am	*0.000 Ci*	*0.004 Ci*	*0.014 Ci*		*0.003 Ci*	*0.019 Ci*	*0.014 Ci*	*0.004 Ci*	*0.002 Ci*
Cs	*0.000 Ci*	*2.146 Ci*	*0.011 Ci*		*0.123 Ci*	*2.035 Ci*	*0.011 Ci*	*2.025 Ci*	*0.001 Ci*
TOTAL ACTIVITIES									
Total U	7.882 kg	5.639 kg	2.454 kg		2,818.851 kg	0.631 kg	0.227 kg	0.404 kg	2,805.734 kg
Total Pu	2.868 Ci	1.012 Ci	2.087 Ci		498.145 Ci	0.245 Ci	0.223 Ci	0.022 Ci	494.287 Ci
Total Am	1.935 Ci	1.169 Ci	0.816 Ci		578.183 Ci	0.236 Ci	0.042 Ci	0.194 Ci	575.272 Ci
TRU	4.803 Ci	2.181 Ci	2.903 Ci		1,076.328 Ci	0.481 Ci	0.265 Ci	0.215 Ci	1 069.559 Ci
Total Cs	23.307 Ci	15.411 Ci	17.365 Ci		5 366.068 Ci	11.638 Ci	4.872 Ci	6.766 Ci	5 334.116 Ci
Total Sr	16.847 Ci	12.053 Ci	5.245 Ci		6 025.193 Ci	1.349 Ci	0.486 Ci	0.863 Ci	5 997.156 Ci
Beta Gamma	40.154 Ci	27.464 Ci	22.611 Ci		11 391.261 Ci	12.987 Ci	5.358 Ci	7.630 Ci	11 331.272 Ci
CONCENTRATION									
PCB in liquid	0.25 ppb		0.06 ppb		9.61 ppb	0.00 ppb	0.00 ppb		10.66 ppb
PCB in solids	1.547 ppm	0.726 ppm	1.551 ppm		1.459 ppm	1.463 ppm	1.551 ppm	0.726 ppm	1.545 ppm
Solids	0.28 g/l	55.66 g/l	49.79 g/l		0.23 g/l	195.71 g/l	196.76 g/l	180.95 g/l	0.20 g/l
U	0.001 g/cm3	0.009 g/cm3	0.000 g/cm3		0.036 g/cm3	0.000 g/cm3	0.000 g/cm3	0.002 g/cm3	0.041 g/cm3
Pu total	0.371 Ci/m3	1.680 Ci/m3	0.391 Ci/m3		6.392 Ci/m3	0.161 Ci/m3	0.166 Ci/m3	0.124 Ci/m3	7.162 Ci/m3
238 Pu	0.074 Ci/m3	0.336 Ci/m3	0.078 Ci/m3		1.278 Ci/m3	0.032 Ci/m3	0.033 Ci/m3	0.025 Ci/m3	1.432 Ci/m3
239 Pu	0.149 Ci/m3	0.672 Ci/m3	0.156 Ci/m3		2.557 Ci/m3	0.065 Ci/m3	0.066 Ci/m3	0.050 Ci/m3	2.865 Ci/m3
240 Pu	0.149 Ci/m3	0.672 Ci/m3	0.156 Ci/m3		2.557 Ci/m3	0.065 Ci/m3	0.066 Ci/m3	0.050 Ci/m3	2.865 Ci/m3
Am	0.251 Ci/m3	1.941 Ci/m3	0.153 Ci/m3		7.419 Ci/m3	0.156 Ci/m3	0.031 Ci/m3	1.109 Ci/m3	8.335 Ci/m3
TRU	0.622 Ci/m3	3.621 Ci/m3	0.544 Ci/m3		13.812 Ci/m3	0.317 Ci/m3	0.197 Ci/m3	1.233 Ci/m3	15.497 Ci/m3
TRU	560 nCi/g	3 306 nCi/g	457 nCi/g		11 601 nCi/g	278 nCi/g	172 nCi/g	1 170 nCi/g	12 827 nCi/g
Beta Gamma	5.200 Ci/m3	45.608 Ci/m3	4.237 Ci/m3		146.178 Ci/m3	8.571 Ci/m3	3.979 Ci/m3	43.663 Ci/m3	164.176 Ci/m3

DETAILED STREAM DATA SHEET FOR THE WHOLE STREAM

STREAM KE2 Nominal Case - TOTAL STREAM	ST-408 TOTAL WATER USED FOR RESIN LEACHING AND WASHING	ST-409 TOTAL WATER FOR SOLIDS LEACHING AND WASHING	ST-410 SOLIDS FROM CENTRIFUGE	ST-501 TOTAL SOLUTION TO FILTRATION	ST-502 FILTER RINSING WATER	ST-503 TOTAL SOLUTION TO ADJUST	ST-504 RINSED FILTER TO CONDITIONING	ST-505 GROUT FORMERS FOR FILTER CONDITIONING	ST-506 CONDITIONED FILTERS
Volume	*0.343 m3*	*4.651 m3*	*1.129 m3*	*77.928 m3*	*0.657 m3*	*78.012 m3*	*0.020 m3*		*0.020 m3*
Density	*1.000*	*1.000*	*1.181*	*1.191*	*1.000*	*1.197*	*1.644*		*1.660*
Total Mass	343.061 kg	4,651.084 kg	1,333.569 kg	92,775.837 kg	656.748 kg	93,399.908 kg	32.676 kg		32.676 kg
Number of packages							1.255		1.255
LIQUID									
Volume	*0.343 m3*	*4.651 m3*	*1.060 m3*	*77.923 m3*	*0.657 m3*	*78.011 m3*	*0.015 m3*		*0.015 m3*
Density	*1.000*	*1.000*	*1.007*	*1.190*	*1.000*	*1.197*	*1.067*		*1.080*
Total Mass Liquid + Gaz	343.061 kg	4,651.084 kg	1,066.677 kg	92,757.683 kg	656.748 kg	93,398.093 kg	16.338 kg		16.338 kg
H2O	343.061 kg	4,651.084 kg	1,055.168 kg	62,238.993 kg	656.748 kg	62,881.553 kg	14.188 kg		14.188 kg
HNO3			9.034 kg	24,281.258 kg		24,279.547 kg	1.711 kg		1.711 kg
H2C2O4				6.103 kg		6.103 kg	0.000 kg		0.000 kg
HF				25.637 kg		25.635 kg	0.002 kg		0.002 kg
NaOH									
Al(NO3)3			0.367 kg	921.099 kg		921.034 kg	0.065 kg		0.065 kg
AlF3									
Fe(NO3)3			0.232 kg	582.504 kg		582.463 kg	0.041 kg		0.041 kg
CaO			0.001 kg	2.873 kg		2.873 kg	0.000 kg		0.000 kg
NaNO2									
NaNO3									
Miscellaneous			0.013 kg	32.882 kg		32.880 kg	0.002 kg		0.002 kg
UO2(NO3)2			1.861 kg	4,666.333 kg		4,666.005 kg	0.329 kg		0.329 kg
Pu			*0.198 Ci*	*498.034 Ci*		*497.999 Ci*	*0.035 Ci*		*0.035 Ci*
Am			*0.230 Ci*	*578.137 Ci*		*578.096 Ci*	*0.041 Ci*		*0.041 Ci*
Cs			*2.137 Ci*	*5,364.766 Ci*		*5,364.388 Ci*	*0.378 Ci*		*0.378 Ci*
Sr			*2.403 Ci*	*6,024.975 Ci*		*6,024.551 Ci*	*0.424 Ci*		*0.424 Ci*
PCB			*0.000 g*	*0.891 g*		*0.045 g*	*0.000 g*		*0.000 g*
GAZ									
NO2									
NO									
PCB									
SOLIDS + RESINS									
Volume			*0.070 m3*	*0.005 m3*		*0.001 m3*	*0.005 m3*		*0.005 m3*
Density			*3.835*	*3.582*		*3.582*	*3.582*		*3.582*
Total Mass Solids + Resins			266.892 kg	18.153 kg		1.815 kg	16.338 kg		16.338 kg
Wt% solids	*0.00 wt%*	*0.00 wt%*	*20.01 wt%*	*0.02 wt%*	*0.00 wt%*	*0.00 wt%*	*50.00 wt%*	*0.00 wt%*	*50.00 wt%*
Al(NO3)3									
Al(OH)3			3.215 kg	0.200 kg		0.020 kg	0.180 kg		0.180 kg
Al2O3									
Fe(NO3)3									
FeOOH			2.040 kg	0.127 kg		0.013 kg	0.114 kg		0.114 kg
C			4.338 kg	0.265 kg		0.026 kg	0.238 kg		0.238 kg
CaO			0.301 kg	0.018 kg		0.002 kg	0.017 kg		0.017 kg
Na2C2O4									
CO2									
H2O									
SiO2			156.292 kg	9.540 kg		0.954 kg	8.586 kg		8.586 kg
Grout									
Miscellaneous			0.313 kg	0.019 kg		0.002 kg	0.018 kg		0.018 kg
Zircaloy			97.369 kg	5.943 kg		0.594 kg	5.349 kg		5.349 kg
Grafoil									
HNO3									
H2C2O4									
Na2U2O7									
U			0.713 kg	0.054 kg		0.005 kg	0.049 kg		0.049 kg
U3O7			0.227 kg	0.017 kg		0.002 kg	0.016 kg		0.016 kg
UH3			0.043 kg	0.003 kg		0.000 kg	0.003 kg		0.003 kg
UO2			0.430 kg	0.033 kg		0.003 kg	0.030 kg		0.030 kg
UO2(NO3)2									
UO4-4H2O									
Pu			*1.410 Ci*	*0.083 Ci*		*0.008 Ci*	*0.075 Ci*		*0.075 Ci*
Am			*0.546 Ci*	*0.043 Ci*		*0.004 Ci*	*0.039 Ci*		*0.039 Ci*
Cs			*15.205 Ci*	*1.180 Ci*		*0.118 Ci*	*1.062 Ci*		*1.062 Ci*
Sr			*2.843 Ci*	*0.217 Ci*		*0.022 Ci*	*0.196 Ci*		*0.196 Ci*
PCB			*0.412 g*	*0.026 g*		*0.003 g*	*0.870 g*		*0.870 g*
RESINS									
Zeolite									
OIER			1.612 kg	1.933 kg		0.193 kg	1.740 kg		1.740 kg
Pu			*0.478 Ci*	*0.028 Ci*		*0.003 Ci*	*0.025 Ci*		*0.025 Ci*
Am			*0.040 Ci*	*0.003 Ci*		*0.000 Ci*	*0.002 Ci*		*0.002 Ci*
Cs			*0.023 Ci*	*0.123 Ci*		*0.012 Ci*	*0.111 Ci*		*0.111 Ci*
TOTAL ACTIVITIES									
Total U			2.454 kg	2,818.851 kg		2,818.561 kg	0.290 kg		0.290 kg
Total Pu			2.087 Ci	498.145 Ci		498.010 Ci	0.135 Ci		0.135 Ci
Total Am			0.816 Ci	578.183 Ci		578.101 Ci	0.082 Ci		0.082 Ci
TRU			2.903 Ci	1 076.328 Ci		1 076.110 Ci	0.217 Ci		0.217 Ci
Total Cs			17.365 Ci	5 366.068 Ci		5 364.518 Ci	1.550 Ci		1.550 Ci
Total Sr			5.245 Ci	6 025.193 Ci		6 024.573 Ci	0.620 Ci		0.620 Ci
Beta Gamma			22.611 Ci	11 391.261 Ci		11 389.091 Ci	2.170 Ci		2.170 Ci
CONCENTRATION									
PCB in liquid			0.33 ppb	9.61 ppb		0.48 ppb	3.84 ppb		3.84 ppb
PCB in solids			1.545 ppm	1.459 ppm		1.459 ppm	53.257 ppm		53.257 ppm
Solids			236.34 g/l	0.23 g/l		0.02 g/l	822.09 g/l		829.88 g/l
U			0.002 g/cm3	0.036 g/cm3		0.036 g/cm3	0.015 g/cm3		0.015 g/cm3
Pu total			1.848 Ci/m3	6.392 Ci/m3		6.384 Ci/m3	6.806 Ci/m3		6.871 Ci/m3
238 Pu			0.370 Ci/m3	1.278 Ci/m3		1.277 Ci/m3	1.361 Ci/m3		1.374 Ci/m3
239 Pu			0.739 Ci/m3	2.557 Ci/m3		2.554 Ci/m3	2.722 Ci/m3		2.748 Ci/m3
240 Pu			0.739 Ci/m3	2.557 Ci/m3		2.554 Ci/m3	2.722 Ci/m3		2.748 Ci/m3
Am			0.723 Ci/m3	7.419 Ci/m3		7.410 Ci/m3	4.117 Ci/m3		4.156 Ci/m3
TRU			2.571 Ci/m3	13.812 Ci/m3		13.794 Ci/m3	10.923 Ci/m3		11.026 Ci/m3
TRU			2 177 nCi/g	11 601 nCi/g		11 522 nCi/g	6 643 nCi/g		6 643 nCi/g
Beta Gamma			20.022 Ci/m3	146.178 Ci/m3		145.992 Ci/m3	109.202 Ci/m3		110.237 Ci/m3

DETAILED STREAM DATA SHEET FOR THE WHOLE STREAM

STREAM KE2 Nominal Case - TOTAL STREAM	ST-601 SOLUTION BEFORE NEUTRALIZATION	ST-602 UO2(NO3)2 ADDITION SOLUTION	ST-603 FE(NO3)3 / AL(NO3)3 ADDITION SOLUTION	ST-604 FINAL SOLUTION SENT TO TWRS	ST-605 NANO2 ADDITION SOLUTION	ST-607 NAOH ADDITION SOLUTION	ST-608 WATER ADJUSTMENT	ST-701 RESINS + SOLID SOLUTION AFTER DECANTATION	ST-702 SUPERNATE TO ELIMINATE
Volume	*104.887 m3*	*0.387 m3*	*24.292 m3*	*217.372 m3*	*23.822 m3*	*33.985 m3*	*52.392 m3*		
Density	*1.203*	*1.323*	*1.328*	*1.178*	*1.251*	*1.403*	*1.000*		
Total Mass	126,171.872 kg	512.253 kg	32,259.711 kg	256,050.317 kg	29,805.610 kg	47,680.607 kg	52,392.228 kg		
Number of packages									
LIQUID									
Volume	*104.886 m3*	*0.387 m3*	*24.292 m3*	*214.209 m3*	*23.822 m3*	*33.985 m3*	*52.392 m3*		
Density	*1.203*	*1.323*	*1.328*	*1.155*	*1.251*	*1.403*	*1.000*	*1.000*	*1.000*
Total Mass Liquid + Gaz	126,170.057 kg	512.253 kg	32,259.711 kg	247,327.938 kg	29,805.610 kg	47,680.607 kg	52,392.228 kg		
H2O	83,750.947 kg	359.700 kg	20,509.694 kg	184,089.329 kg	17,883.366 kg	21,852.195 kg	52,392.228 kg		
HNO3	24,279.547 kg								
H2C2O4	6.103 kg								
HF	25.635 kg								
NaOH				2,301.856 kg		25,828.411 kg			
Al(NO3)3	921.034 kg								
AlF3				35.889 kg					
Fe(NO3)3	12,332.480 kg		11,750.017 kg						
CaO	2.873 kg			2.873 kg					
NaNO2				11,922.244 kg	11,922.244 kg				
NaNO3				48,942.867 kg					
Miscellaneous	32.880 kg			32.880 kg					
UO2(NO3)2	4,818.558 kg	152.553 kg							
Pu	*497.999 Ci*								
Am	*578.096 Ci*								
Cs	*5,364.388 Ci*			*5,364.388 Ci*					
Sr	*6,024.551 Ci*								
PCB	*0.045 g*			*0.002 g*					
GAZ									
NO2									
NO									
PCB									
SOLIDS + RESINS									
Volume	*0.001 m3*			*3.164 m3*					
Density	*3.582*			*2.757*					
Total Mass Solids + Resins	1.815 kg			8,722.379 kg					
Wt% solids	*0.00 wt%*	*0.00 wt%*	*0.00 wt%*	*3.41 wt%*	*0.00 wt%*	*0.00 wt%*	*0.00 wt%*	*0.00 wt%*	*0.00 wt%*
Al(NO3)3									
Al(OH)3	0.020 kg			303.974 kg					
Al2O3									
Fe(NO3)3									
FeOOH	0.013 kg			4,530.676 kg					
C	0.026 kg			0.026 kg					
CaO	0.002 kg			0.002 kg					
Na2C2O4				9.086 kg					
CO2									
H2O									
SiO2	0.954 kg			0.954 kg					
Grout									
Miscellaneous	0.002 kg			0.002 kg					
Zircaloy	0.594 kg			0.594 kg					
Grafoil									
HNO3									
H2C2O4									
Na2U2O7				3,876.860 kg					
U	0.005 kg			0.005 kg					
U3O7	0.002 kg			0.002 kg					
UH3	0.000 kg			0.000 kg					
UO2	0.003 kg			0.003 kg					
UO2(NO3)2									
UO4-4H2O									
Pu	*0.008 Ci*			*498.007 Ci*					
Am	*0.004 Ci*			*578.100 Ci*					
Cs	*0.118 Ci*			*0.118 Ci*					
Sr	*0.022 Ci*			*6,024.573 Ci*					
PCB	*0.003 g*			*0.045 g*					
RESINS									
Zeolite									
OIER	0.193 kg			0.193 kg					
Pu	*0.003 Ci*			*0.003 Ci*					
Am	*0.000 Ci*			*0.000 Ci*					
Cs	*0.012 Ci*			*0.012 Ci*					
TOTAL ACTIVITIES									
Total U	2,910.713 kg	92.151 kg		2,910.713 kg					
Total Pu	498.010 Ci			498.010 Ci					
Total Am	578.101 Ci			578.101 Ci					
TRU	**1 076.110 Ci**			**1 076.110 Ci**					
Total Cs	5 364.518 Ci			5 364.518 Ci					
Total Sr	6 024.573 Ci			6 024.573 Ci					
Beta Gamma	**11 389.091 Ci**			**11 389.091 Ci**					
CONCENTRATION									
PCB in liquid	0.35 ppb			0.01 ppb					
PCB in solids	1.459 ppm			0.005 ppm					
Solids	0.02 g/l			40.13 g/l					
U	0.028 g/cm3	0.238 g/cm3		0.013 g/cm3					
Pu total	**4.748 Ci/m3**			**2.291 Ci/m3**					
238 Pu	0.950 Ci/m3			0.458 Ci/m3					
239 Pu	1.899 Ci/m3			0.916 Ci/m3					
240 Pu	1.899 Ci/m3			0.916 Ci/m3					
Am	5.512 Ci/m3			2.659 Ci/m3					
TRU	10.260 Ci/m3			4.951 Ci/m3					
TRU	**8 529 nCi/g**			**4 203 nCi/g**					
Beta Gamma	**108.585 Ci/m3**			**52.394 Ci/m3**					

STREAM KE2 Nominal Case - TOTAL STREAM	ST-703 GROUT FORMERS	ST-704 FINAL GROUT WASTES TO ERDF	ST-901 ADDED WATER TO OFF-GAS TREATMENT
Volume			*2.458 m3*
Density			*1.000*
Total Mass			2,458.326 kg
Number of packages			
LIQUID			
Volume			*2.458 m3*
Density			*1.000*
Total Mass Liquid + Gaz			2,458.326 kg
H2O			2,458.326 kg
HNO3			
H2C2O4			
HF			
NaOH			
Al(NO3)3			
AlF3			
Fe(NO3)3			
CaO			
NaNO2			
NaNO3			
Miscellaneous			
UO2(NO3)2			
Pu			
Am			
Cs			
Sr			
PCB			
GAZ			
NO2			
NO			
PCB			
SOLIDS + RESINS			
Volume			
Density			
Total Mass Solids + Resins			
Wt% solids	*0.00 wt%*	*0.00 wt%*	*0.00 wt%*
Al(NO3)3			
Al(OH)3			
Al2O3			
Fe(NO3)3			
FeOOH			
C			
CaO			
Na2C2O4			
CO2			
H2O			
SiO2			
Grout			
Miscellaneous			
Zircaloy			
Grafoil			
HNO3			
H2C2O4			
Na2U2O7			
U			
U3O7			
UH3			
UO2			
UO2(NO3)2			
UO4-4H2O			
Pu			
Am			
Cs			
Sr			
PCB			
RESINS			
Zeolite			
OIER			
Pu			
Am			
Cs			
TOTAL ACTIVITIES			
Total U			
Total Pu			
Total Am			
TRU			
Total Cs			
Total Sr			
Beta Gamma			
CONCENTRATION			
PCB in liquid			
PCB in solids			
Solids			
U			
Pu total			
238 Pu			
239 Pu			
240 Pu			
Am			
TRU			
TRU			
Beta Gamma			

APPENDIX C

KW1 STREAM

This page intentionally left blank.

SLUDGE TREATMENT
CHEMICAL FLOW SHEET

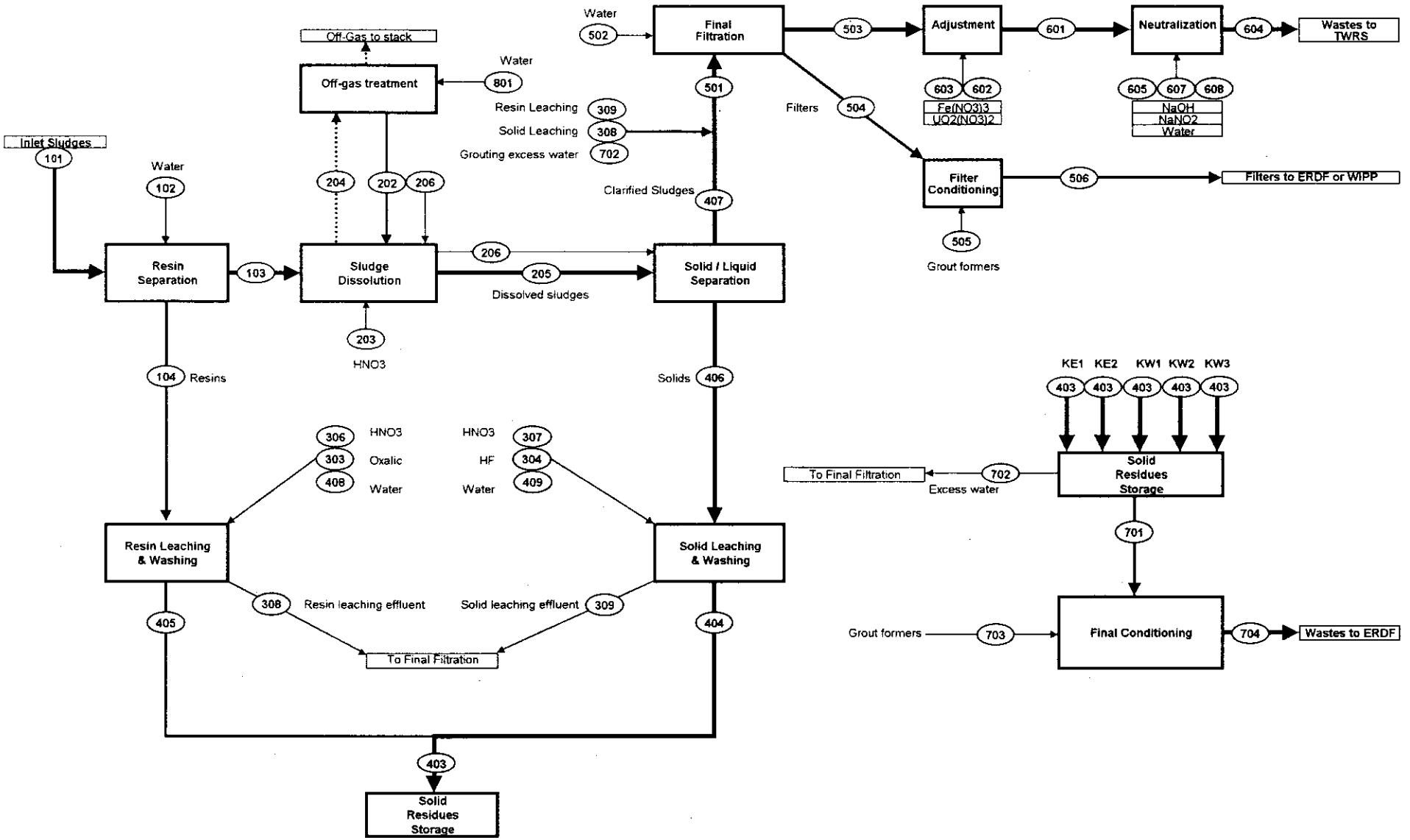

SLUDGE TREATMENT
MATERIAL BALANCE

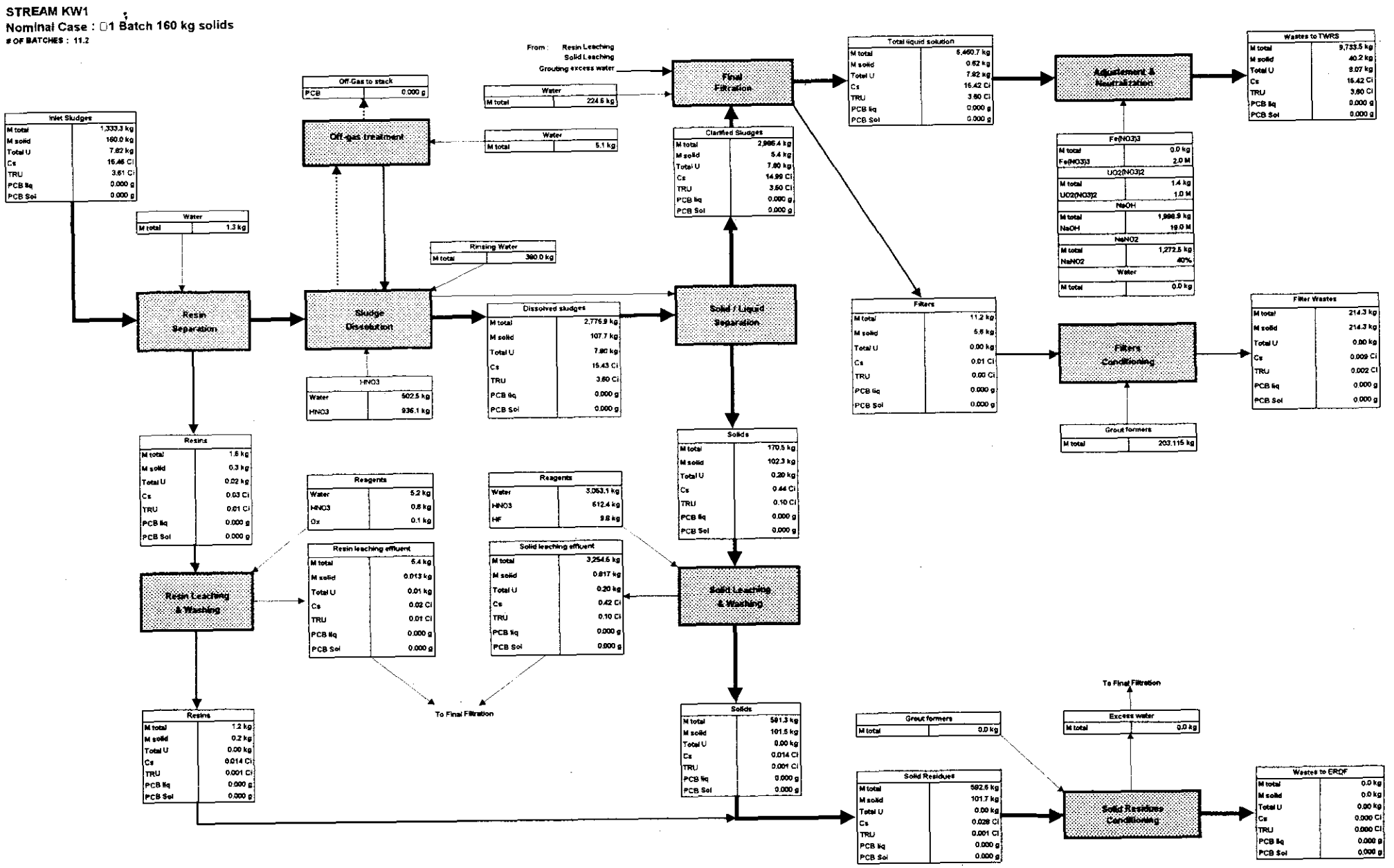

SLUDGE TREATMENT
CONCENTRATION

STREAM KW1
Nominal Case : □1 Batch 160 kg solids

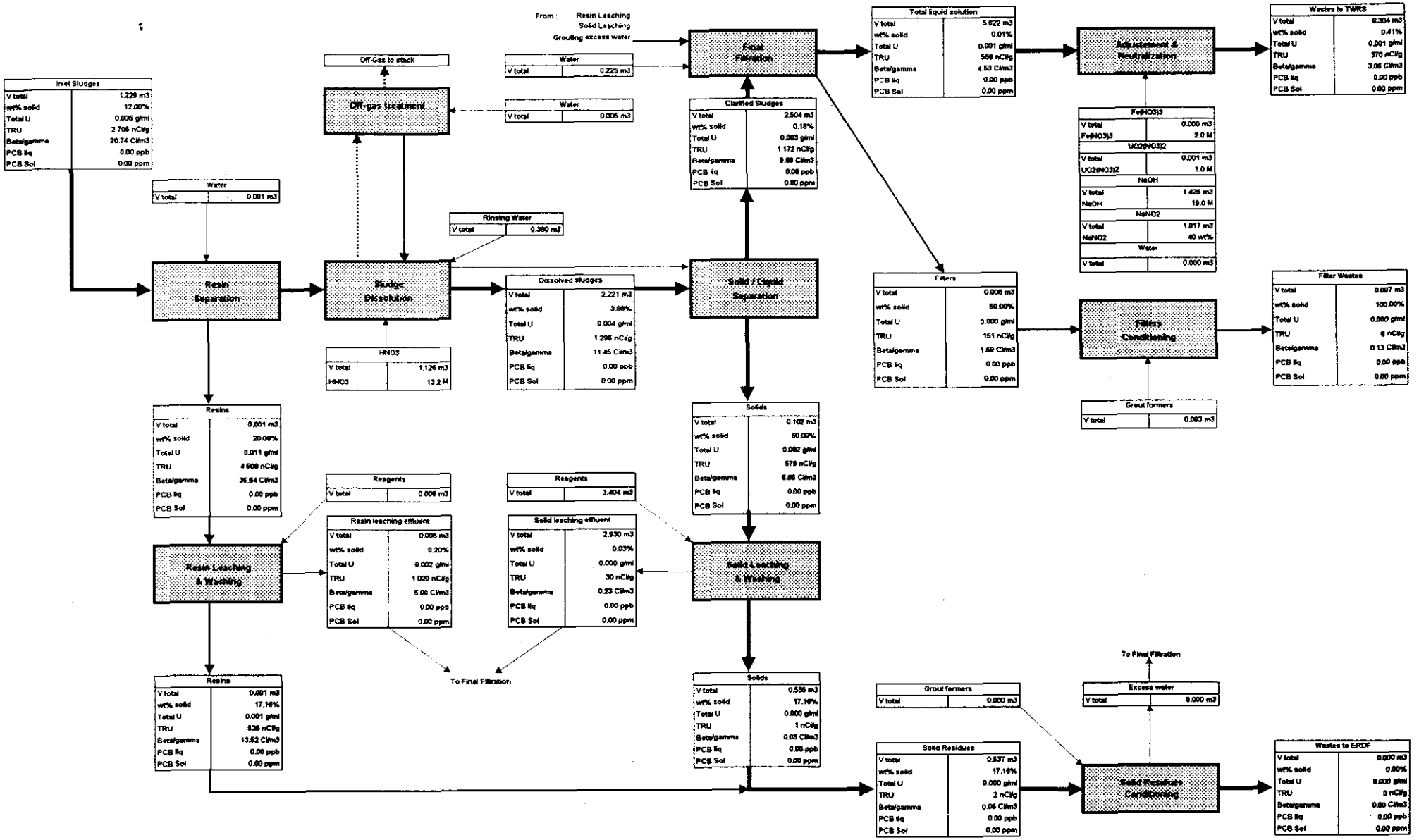

Requirements

STREAM KW1	Requirements		Obtained results
Effluent sent to TWRS	**TWRS Requirements**		
PCB in liq	< 0.5 ppb		0.00 ppb
PCB in sol	< 2 ppm		0.000 ppm
Concentration	< 40 g/l		4.84 g/l
Na(NO3) concentration			2.96 M
NaOH Concentration	Req on [OH-] : 0.30 M		0.30 M
NaOH + Na(NO2) Concentration	Req on [OH-]+[NO2-] : 1.18 M		1.18 M
Na(NO2) concentration	Req on [NO2-] : none		0.89 M
Volume generated m3			**93 m3**
Filters : Grouted sent to ERDF or sent as-is to WIPP	**ERDF Requirements**	**WIPP Requirements**	
PCB (ppm)		< 2 ppm	0.000 ppm
U g/ml	< 0.026 g/ml		0.0000 g/ml
Pu(Total)	Ci/m3		0.010 Ci/m3
238 Pu	< 1.5 Ci/m3		0.002 Ci/m3
239 Pu	< 0.029 Ci/m3		0.004 Ci/m3
240 Pu	< 0.029 Ci/m3		0.004 Ci/m3
Am	< 0.05 Ci/m3		0.008 Ci/m3
TRU	< 100 nanoCi/g	> 100 nanoCi/g	8 nCi/g
Volume generated m3			1.1 m3
Number of 0.2 m3 drums			**5.5**

DETAILED STREAM DATA SHEET FOR ONE DAILY BATCH

STREAM KW1 Nominal Case : 1 Batch 160 kg solids	ST-101 SLUDGE AT INLET OF TREATMENT UNIT	ST-102 WATER ADDITION FOR SCREEN WASHING	ST-103 SLUDGE STREAM FROM RESIN SEPARATION	ST-104 RESIN STREAM FROM RESIN SEPARATION	ST-201 SLUDGE TO DISSOLVER	ST-202 RECYCLED NITRIC ACID	ST-203 HNO3 FOR DISSOLUTION	ST-204 DISSOLUTION OFF-GAS	ST-205 DISSOLUTION SOLUTION
Volume	*1.229 m3*	*0.001 m3*	*1.229 m3*	*0.001 m3*	*1.229 m3*	*0.007 m3*	*1.126 m3*	*0.895 m3*	*2.221 m3*
Density	*1.085*	*1.000*	*1.085*	*1.150*	*1.085*	*1.125*	*1.278*	*0.002*	*1.250*
Total Mass	1,333.333 kg	1.280 kg	1,333.013 kg	1.600 kg	1,333.013 kg	7.615 kg	1,438.521 kg	1.772 kg	2,776.907 kg
Number of packages									
LIQUID									
Volume	*1.173 m3*	*0.001 m3*	*1.173 m3*	*0.001 m3*	*1.173 m3*	*0.007 m3*	*1.126 m3*	*0.895 m3*	*2.172 m3*
Density	*1.000*	*1.000*	*1.000*	*1.000*	*1.000*	*1.125*	*1.278*	*0.002*	*1.229*
Total Mass Liquid + Gaz	1,173.333 kg	1.280 kg	1,173.333 kg	1.280 kg	1,173.333 kg	7.615 kg	1,438.521 kg	1.772 kg	2,669.212 kg
H2O	1,173.333 kg	1.280 kg	1,173.333 kg	1.280 kg	1,173.333 kg	5.056 kg	502.469 kg		1,697.853 kg
HNO3						2.558 kg	936.052 kg		840.000 kg
H2C2O4									
HF									
NaOH									
Al(NO3)3									34.790 kg
AlF3									
Fe(NO3)3									78.124 kg
CaO									1.549 kg
NaNO2									
NaNO3									
Miscellaneous									3.983 kg
UO2(NO3)2									12.914 kg
Pu									*1.842 Ci*
Am									*1.750 Ci*
Cs									*15.382 Ci*
Sr									*9.997 Ci*
PCB									
GAZ									
NO2								1.592 kg	
NO								0.180 kg	
PCB									
SOLIDS + RESINS									
Volume	*0.055 m3*		*0.055 m3*	*0.000 m3*	*0.055 m3*				*0.049 m3*
Density	*2.887*		*2.887*	*2.887*	*2.887*				*2.211*
Total Mass Solids + Resins	160.000 kg		159.680 kg	0.320 kg	159.680 kg				107.695 kg
Wt% solids	*12.00 wt%*	*0.00 wt%*	*11.98 wt%*	*20.00 wt%*	*11.98 wt%*	*0.00 wt%*	*0.00 wt%*	*0.00 wt%*	*3.88 wt%*
Al(NO3)3									
Al(OH)3									
Al2O3	8.786 kg		8.768 kg	0.018 kg	8.768 kg				0.438 kg
Fe(NO3)3									
FeOOH	29.049 kg		28.991 kg	0.058 kg	28.991 kg				0.290 kg
C	0.081 kg		0.081 kg	0.000 kg	0.081 kg				0.081 kg
CaO	1.724 kg		1.721 kg	0.003 kg	1.721 kg				0.172 kg
Na2C2O4									
CO2	0.498 kg		0.497 kg	0.001 kg	0.497 kg				
H2O									
SiO2	106.882 kg		106.669 kg	0.214 kg	106.669 kg				106.669 kg
Grout									
Miscellaneous	4.031 kg		4.023 kg	0.008 kg	4.023 kg				0.040 kg
Zircaloy									
Grafoil									
HNO3									
H2C2O4									
Na2U2O7									
U	0.078 kg		0.078 kg	0.000 kg	0.078 kg				0.000 kg
U3O7	4.479 kg		4.470 kg	0.009 kg	4.470 kg				0.002 kg
UH3									
UO2	4.391 kg		4.383 kg	0.009 kg	4.383 kg				0.002 kg
UO2(NO3)2									
UO4-4H2O									
Pu	*1.851 Ci*		*1.847 Ci*	*0.004 Ci*	*1.847 Ci*				*0.006 Ci*
Am	*1.755 Ci*		*1.752 Ci*	*0.004 Ci*	*1.752 Ci*				*0.002 Ci*
Cs	*15.459 Ci*		*15.428 Ci*	*0.031 Ci*	*15.428 Ci*				*0.046 Ci*
Sr	*10.022 Ci*		*10.002 Ci*	*0.020 Ci*	*10.002 Ci*				*0.005 Ci*
PCB									
RESINS									
Zeolite									
OIER									
Pu									
Am									*0.000 Ci*
Cs									
TOTAL ACTIVITIES									
Total U	7.821 kg		7.805 kg	0.016 kg	7.805 kg				7.805 kg
Total Pu	1.851 Ci		1.847 Ci	0.004 Ci	1.847 Ci				1.847 Ci
Total Am	1.755 Ci		1.752 Ci	0.004 Ci	1.752 Ci				1.752 Ci
TRU	3.606 Ci		3.599 Ci	0.007 Ci	3.599 Ci				3.599 Ci
Total Cs	15.459 Ci		15.428 Ci	0.031 Ci	15.428 Ci				15.428 Ci
Total Sr	10.022 Ci		10.002 Ci	0.020 Ci	10.002 Ci				10.002 Ci
Beta Gamma	25.482 Ci		25.431 Ci	0.051 Ci	25.431 Ci				25.431 Ci
CONCENTRATION									
PCB in liquid									
PCB in solids									
Solids	130.21 g/l		129.96 g/l	230.08 g/l	1.50 g/l				48.49 g/l
U	0.006 g/cm3		0.006 g/cm3	0.011 g/cm3	0.006 g/cm3				0.004 g/cm3
Pu total	1.507 Ci/m3		1.504 Ci/m3	2.662 Ci/m3	1.504 Ci/m3				0.832 Ci/m3
238 Pu	0.301 Ci/m3		0.301 Ci/m3	0.532 Ci/m3	0.301 Ci/m3				0.166 Ci/m3
239 Pu	0.603 Ci/m3		0.601 Ci/m3	1.065 Ci/m3	0.601 Ci/m3				0.333 Ci/m3
240 Pu	0.603 Ci/m3		0.601 Ci/m3	1.065 Ci/m3	0.601 Ci/m3				0.333 Ci/m3
Am	1.428 Ci/m3		1.426 Ci/m3	2.524 Ci/m3	1.426 Ci/m3				0.789 Ci/m3
TRU	2.935 Ci/m3		2.929 Ci/m3	5.186 Ci/m3	2.929 Ci/m3				1.620 Ci/m3
TRU	2 705 nCi/g		2 700 nCi/g	4 508 nCi/g	2 700 nCi/g				1 296 nCi/g
Beta Gamma	20.738 Ci/m3		20.698 Ci/m3	36.642 Ci/m3	20.698 Ci/m3				11.449 Ci/m3

DETAILED STREAM DATA SHEET FOR ONE DAILY BATCH

STREAM KW1 Nominal Case : 1 Batch 160 kg solids	ST-206	ST-301	ST-302	ST-303	ST-304	ST-305	ST-306	ST-307	ST-308
	DISSOLVER WASHING WATER	RESIN STREAM TO LEACHING	TOTAL REAGENTS FOR RESINS AND SOLIDS LEACHING	TOTAL OXALIC USED FOR RESIN LEACHING AND WASHING	TOTAL HF USED FOR SOLIDS LEACHING AND WASHING	TOTAL HNO3 USED FOR RESINS AND SOLIDS LEACHING	TOTAL HNO3 USED FOR RESIN LEACHING AND WASHING	TOTAL HNO3 USED FOR SOLIDS LEACHING AND WASHING	TOTAL CLARIFIED SOLUTION FROM RESIN LEACHING
Volume	*0.380 m3*	*0.001 m3*	*1.628 m3*	*0.002 m3*	*0.889 m3*	*0.737 m3*	*0.001 m3*	*0.736 m3*	*0.006 m3*
Density	*1.000*	*1.150*	*1.167*	*1.100*	*1.075*	*1.278*	*1.278*	*1.278*	*1.076*
Total Mass	380.000 kg	1.600 kg	1,900.285 kg	2.570 kg	955.309 kg	942.406 kg	1.210 kg	941.196 kg	6.439 kg
Number of packages									
LIQUID									
Volume	*0.380 m3*	*0.001 m3*	*1.628 m3*	*0.002 m3*	*0.889 m3*	*0.737 m3*	*0.001 m3*	*0.736 m3*	*0.006 m3*
Density	*1.000*	*1.000*	*1.167*	*1.100*	*1.075*	*1.278*	*1.278*	*1.278*	*1.075*
Total Mass Liquid + Gaz	380.000 kg	1.280 kg	1,900.285 kg	2.570 kg	955.309 kg	942.406 kg	1.210 kg	941.196 kg	6.426 kg
H2O	380.000 kg	1.280 kg	1,277.208 kg	2.520 kg	945.509 kg	329.178 kg	0.423 kg	328.756 kg	5.529 kg
HNO3			613.227 kg			613.227 kg	0.787 kg	612.440 kg	0.605 kg
H2C2O4			0.050 kg	0.050 kg					0.050 kg
HF			9.800 kg		9.800 kg				
NaOH									
Al(NO3)3									0.066 kg
AlF3									
Fe(NO3)3									0.142 kg
CaO									0.003 kg
NaNO2									
NaNO3									
Miscellaneous									0.007 kg
UO2(NO3)2									0.024 kg
Pu									*0.004 Ci*
Am									*0.003 Ci*
Cs									*0.016 Ci*
Sr									*0.019 Ci*
PCB									
GAZ									
NO2									
NO									
PCB									
SOLIDS + RESINS									
Volume		*0.000 m3*							*0.000 m3*
Density		*2.887*							*2.284*
Total Mass Solids + Resins		0.320 kg							0.013 kg
Wt% solids	*0.00 wt%*	*20.00 wt%*	*0.00 wt%*	*0.00 wt%*	*0.00 wt%*	*0.00 wt%*	*0.00 wt%*	*0.00 wt%*	*0.20 wt%*
Al(NO3)3									
Al(OH)3									
Al2O3		0.018 kg							0.000 kg
Fe(NO3)3									
FeOOH		0.058 kg							0.000 kg
C		0.000 kg							0.000 kg
CaO		0.003 kg							0.000 kg
Na2C2O4									
CO2		0.001 kg							
H2O									
SiO2		0.214 kg							0.012 kg
Grout									
Miscellaneous		0.008 kg							0.000 kg
Zircaloy									
Grafoil									
HNO3									
H2C2O4									
Na2U2O7									
U		0.000 kg							0.000 kg
U3O7		0.009 kg							0.000 kg
UH3									
UO2		0.009 kg							0.000 kg
UO2(NO3)2									
UO4-4H2O									
Pu		*0.004 Ci*							*0.000 Ci*
Am		*0.004 Ci*							*0.000 Ci*
Cs		*0.031 Ci*							*0.001 Ci*
Sr		*0.020 Ci*							*0.000 Ci*
PCB									
RESINS									
Zeolite									
OIER									
Pu									
Am									
Cs									
TOTAL ACTIVITIES									
Total U		0.016 kg							0.015 kg
Total Pu		0.004 Ci							0.004 Ci
Total Am		0.004 Ci							0.003 Ci
TRU		0.007 Ci							0.007 Ci
Total Cs		0.031 Ci							0.017 Ci
Total Sr		0.020 Ci							0.019 Ci
Beta Gamma		0.051 Ci							0.036 Ci
CONCENTRATION									
PCB in liquid									
PCB in solids									
Solids		230.08 g/l							2.12 g/l
U		0.011 g/cm3							0.002 g/cm3
Pu total		2.662 Ci/m3							0.607 Ci/m3
238 Pu		0.532 Ci/m3							0.121 Ci/m3
239 Pu		1.065 Ci/m3							0.243 Ci/m3
240 Pu		1.065 Ci/m3							0.243 Ci/m3
Am		2.524 Ci/m3							0.491 Ci/m3
TRU		5.186 Ci/m3							1.097 Ci/m3
TRU		4 508 nCi/g							1 020 nCi/g
Beta Gamma		36.642 Ci/m3							6.001 Ci/m3

DETAILED STREAM DATA SHEET FOR ONE DAILY BATCH

STREAM KW1 Nominal Case : 1 Batch 160 kg solids	ST-309 TOTAL SOLIDS LEACHING EFFLUENT	ST-310 LEACHED RESINS	ST-311 LEACHED SOLIDS	ST-401 TOTAL WATER USED FOR RESINS AND SOLIDS WASHING	ST-402 TOTAL SOLUTION FROM CENTRIFUGE	ST-403 RESINS + SOLID RESIDUES FROM LEACHING	ST-404 FINAL DECLOGGING (SOLIDS)	ST-405 FINAL DECLOGGING (RESIN)	ST-407 DISSOLUTION SOLUTION AFTER CENTRIFUGE
Volume	*2.930 m3*	*0.005 m3*	*2.036 m3*	*1.781 m3*	*5.439 m3*	*0.537 m3*	*0.535 m3*	*0.001 m3*	*2.504 m3*
Density	*1.111*	*1.120*	*1.181*	*1.000*	*1.149*	*1.104*	*1.105*	*1.107*	*1.193*
Total Mass	3,254.490 kg	5.376 kg	2,405.157 kg	1,781.112 kg	6,247.319 kg	592.581 kg	591.347 kg	1.233 kg	2,986.390 kg
Number of packages									
LIQUID									
Volume	*2.929 m3*	*0.005 m3*	*1.990 m3*	*1.781 m3*	*5.436 m3*	*0.491 m3*	*0.489 m3*	*0.001 m3*	*2.501 m3*
Density	*1.111*	*1.095*	*1.158*	*1.000*	*1.148*	*1.000*	*1.002*	*1.000*	*1.192*
Total Mass Liquid + Gaz	3,253.673 kg	5.151 kg	2,303.362 kg	1,781.112 kg	6,241.105 kg	490.879 kg	489.858 kg	1.021 kg	2,981.006 kg
H2O	2,607.121 kg	4.254 kg	1,677.000 kg	1,781.112 kg	4,647.118 kg	490.366 kg	489.346 kg	1.021 kg	2,034.468 kg
HNO3	633.399 kg	0.605 kg	616.000 kg		1,452.539 kg	0.504 kg	0.503 kg	0.000 kg	818.535 kg
H2C2O4		0.050 kg			0.050 kg	0.000 kg		0.000 kg	
HF	9.792 kg		9.800 kg		9.792 kg	0.008 kg	0.008 kg		
NaOH									
Al(NO3)3	0.889 kg	0.066 kg	0.148 kg		34.855 kg	0.000 kg	0.000 kg	0.000 kg	33.901 kg
AlF3									
Fe(NO3)3	1.996 kg	0.142 kg	0.331 kg		78.266 kg	0.000 kg	0.000 kg	0.000 kg	76.128 kg
CaO	0.040 kg	0.003 kg	0.007 kg		1.551 kg	0.000 kg	0.000 kg	0.000 kg	1.509 kg
NaNO2									
NaNO3									
Miscellaneous	0.102 kg	0.007 kg	0.017 kg		3.990 kg	0.000 kg	0.000 kg	0.000 kg	3.881 kg
UO2(NO3)2	0.335 kg	0.024 kg	0.060 kg		12.943 kg	0.000 kg	0.000 kg	0.000 kg	12.584 kg
Pu	*0.052 Ci*	*0.004 Ci*	*0.012 Ci*		*1.850 Ci*	*0.000 Ci*	*0.000 Ci*	*0.000 Ci*	*1.795 Ci*
Am	*0.046 Ci*	*0.003 Ci*	*0.009 Ci*		*1.754 Ci*	*0.000 Ci*	*0.000 Ci*	*0.000 Ci*	*1.705 Ci*
Cs	*0.423 Ci*	*0.016 Ci*	*0.095 Ci*		*15.428 Ci*	*0.000 Ci*	*0.000 Ci*	*0.000 Ci*	*14.989 Ci*
Sr	*0.259 Ci*	*0.019 Ci*	*0.046 Ci*		*10.020 Ci*	*0.000 Ci*	*0.000 Ci*	*0.000 Ci*	*9.742 Ci*
PCB									
GAZ									
NO2									
NO									
PCB									
SOLIDS + RESINS									
Volume	*0.000 m3*	*0.000 m3*	*0.046 m3*		*0.003 m3*	*0.046 m3*	*0.046 m3*	*0.000 m3*	*0.002 m3*
Density	*2.211*	*2.284*	*2.211*		*2.211*	*2.211*	*2.211*	*2.284*	*2.211*
Total Mass Solids + Resins	0.817 kg	0.224 kg	101.795 kg		6.214 kg	101.701 kg	101.490 kg	0.212 kg	5.385 kg
Wt% solids	*0.03 wt%*	*4.17 wt%*	*4.23 wt%*	*0.00 wt%*	*0.10 wt%*	*17.16 wt%*	*17.16 wt%*	*17.16 wt%*	*0.18 wt%*
Al(NO3)3									
Al(OH)3									
Al2O3	0.003 kg	0.002 kg	0.414 kg		0.025 kg	0.415 kg	0.413 kg	0.002 kg	0.022 kg
Fe(NO3)3									
FeOOH	0.002 kg	0.006 kg	0.274 kg		0.017 kg	0.279 kg	0.273 kg	0.005 kg	0.014 kg
C	0.001 kg	0.000 kg	0.077 kg		0.005 kg	0.077 kg	0.076 kg	0.000 kg	0.004 kg
CaO	0.001 kg	0.001 kg	0.163 kg		0.010 kg	0.163 kg	0.162 kg	0.001 kg	0.009 kg
Na2C2O4									
CO2									
H2O									
SiO2	0.809 kg	0.214 kg	100.828 kg		6.154 kg	100.728 kg	100.526 kg	0.202 kg	5.333 kg
Grout									
Miscellaneous	0.000 kg	0.001 kg	0.038 kg		0.002 kg	0.039 kg	0.038 kg	0.001 kg	0.002 kg
Zircaloy									
Grafoil									
HNO3									
H2C2O4									
Na2U2O7									
U	0.000 kg	0.000 kg	0.000 kg		0.000 kg	0.000 kg	0.000 kg	0.000 kg	0.000 kg
U3O7	0.000 kg	0.001 kg	0.000 kg		0.000 kg	0.001 kg	0.000 kg	0.001 kg	0.000 kg
UH3									
UO2	0.000 kg	0.001 kg	0.000 kg		0.000 kg	0.001 kg	0.000 kg	0.001 kg	0.000 kg
UO2(NO3)2									
UO4-4H2O									
Pu	*0.000 Ci*	*0.000 Ci*	*0.001 Ci*		*0.000 Ci*	*0.001 Ci*	*0.001 Ci*	*0.000 Ci*	*0.000 Ci*
Am	*0.000 Ci*	*0.001 Ci*	*0.000 Ci*		*0.000 Ci*	*0.001 Ci*	*0.000 Ci*	*0.001 Ci*	*0.000 Ci*
Cs	*0.000 Ci*	*0.014 Ci*	*0.014 Ci*		*0.003 Ci*	*0.028 Ci*	*0.014 Ci*	*0.014 Ci*	*0.002 Ci*
Sr	*0.000 Ci*	*0.002 Ci*	*0.001 Ci*		*0.000 Ci*	*0.002 Ci*	*0.001 Ci*	*0.001 Ci*	*0.000 Ci*
PCB									
RESINS									
Zeolite									
OIER									
Pu									
Am	*0.000 Ci*		*0.000 Ci*		*0.000 Ci*	*0.000 Ci*	*0.000 Ci*		*0.000 Ci*
Cs									
TOTAL ACTIVITIES									
Total U	0.202 kg	0.016 kg	0.037 kg		7.819 kg	0.002 kg	0.001 kg	0.001 kg	7.602 kg
Total Pu	0.052 Ci	0.004 Ci	0.013 Ci		1.851 Ci	0.001 Ci	0.001 Ci	0.000 Ci	1.795 Ci
Total Am	0.046 Ci	0.004 Ci	0.009 Ci		1.755 Ci	0.001 Ci	0.000 Ci	0.001 Ci	1.705 Ci
TRU	0.098 Ci	0.007 Ci	0.022 Ci		3.605 Ci	0.001 Ci	0.001 Ci	0.001 Ci	3.500 Ci
Total Cs	0.423 Ci	0.031 Ci	0.109 Ci		15.432 Ci	0.028 Ci	0.014 Ci	0.014 Ci	14.991 Ci
Total Sr	0.259 Ci	0.020 Ci	0.047 Ci		10.020 Ci	0.002 Ci	0.001 Ci	0.001 Ci	9.742 Ci
Beta Gamma	0.682 Ci	0.051 Ci	0.156 Ci		25.452 Ci	0.030 Ci	0.015 Ci	0.015 Ci	24.733 Ci
CONCENTRATION									
PCB in liquid									
PCB in solids									
Solids	0.28 g/l	46.72 g/l	50.00 g/l		1.14 g/l	189.43 g/l	189.73 g/l	189.95 g/l	2.15 g/l
U	0.000 g/cm3	0.003 g/cm3	0.000 g/cm3		0.001 g/cm3	0.000 g/cm3	0.000 g/cm3	0.001 g/cm3	0.003 g/cm3
Pu total	0.018 Ci/m3	0.771 Ci/m3	0.006 Ci/m3		0.340 Ci/m3	0.001 Ci/m3	0.001 Ci/m3	0.065 Ci/m3	0.717 Ci/m3
238 Pu	0.004 Ci/m3	0.154 Ci/m3	0.001 Ci/m3		0.068 Ci/m3	0.000 Ci/m3	0.000 Ci/m3	0.013 Ci/m3	0.143 Ci/m3
239 Pu	0.007 Ci/m3	0.308 Ci/m3	0.003 Ci/m3		0.136 Ci/m3	0.000 Ci/m3	0.000 Ci/m3	0.026 Ci/m3	0.287 Ci/m3
240 Pu	0.007 Ci/m3	0.308 Ci/m3	0.003 Ci/m3		0.136 Ci/m3	0.000 Ci/m3	0.000 Ci/m3	0.026 Ci/m3	0.287 Ci/m3
Am	0.016 Ci/m3	0.731 Ci/m3	0.004 Ci/m3		0.323 Ci/m3	0.001 Ci/m3	0.000 Ci/m3	0.516 Ci/m3	0.681 Ci/m3
TRU	0.033 Ci/m3	1.502 Ci/m3	0.011 Ci/m3		0.663 Ci/m3	0.002 Ci/m3	0.001 Ci/m3	0.581 Ci/m3	1.398 Ci/m3
TRU	30 nCi/g	1 342 nCi/g	9 nCi/g		577 nCi/g	2 nCi/g	1 nCi/g	525 nCi/g	1 172 nCi/g
Beta Gamma	0.233 Ci/m3	10.614 Ci/m3	0.077 Ci/m3		4.679 Ci/m3	0.056 Ci/m3	0.028 Ci/m3	13.523 Ci/m3	9.878 Ci/m3

DETAILED STREAM DATA SHEET FOR ONE DAILY BATCH

STREAM KW1 Nominal Case : 1 Batch 160 kg solids	ST-408 TOTAL WATER USED FOR RESIN LEACHING AND WASHING	ST-409 TOTAL WATER FOR SOLIDS LEACHING AND WASHING	ST-410 SOLIDS FROM CENTRIFUGE	ST-501 TOTAL SOLUTION TO FILTRATION	ST-502 FILTER RINSING WATER	ST-503 TOTAL SOLUTION TO ADJUST	ST-504 RINSED FILTER TO CONDITIONING	ST-505 GROUT FORMERS FOR FILTER CONDITIONING	ST-506 CONDITIONED FILTERS
Volume	*0.002 m3*	*1.779 m3*	*0.450 m3*	*5.439 m3*	*0.225 m3*	*5.622 m3*	*0.008 m3*	*0.093 m3*	*0.097 m3*
Density	*1.000*	*1.000*	*1.129*	*1.149*	*1.000*	*1.149*	*1.426*	*2.196*	*2.198*
Total Mass	**2.296 kg**	**1,778.816 kg**	**508.653 kg**	**6,247.319 kg**	**224.564 kg**	**6,460.697 kg**	**11.185 kg**	**203.115 kg**	**214.300 kg**
Number of packages							0.495		0.495
LIQUID									
Volume	*0.002 m3*	*1.779 m3*	*0.404 m3*	*5.436 m3*	*0.225 m3*	*5.621 m3*	*0.005 m3*		
Density	*1.000*	*1.000*	*1.006*	*1.148*	*1.000*	*1.149*	*1.052*		*1.001*
Total Mass Liquid + Gaz	2.296 kg	1,778.816 kg	406.854 kg	6,241.105 kg	224.564 kg	6,460.076 kg	5.593 kg		
H2O	2.296 kg	1,778.816 kg	402.735 kg	4,647.118 kg	224.564 kg	4,866.861 kg	5.021 kg		
HNO3			3.563 kg	1,452.539 kg		1,452.018 kg	0.521 kg		
H2C2O4				0.050 kg		0.050 kg	0.000 kg		
HF				9.792 kg		9.788 kg	0.004 kg		
NaOH									
Al(NO3)3			0.148 kg	34.855 kg		34.843 kg	0.012 kg		
AlF3									
Fe(NO3)3			0.331 kg	78.266 kg		78.238 kg	0.028 kg		
CaO			0.007 kg	1.551 kg		1.551 kg	0.001 kg		
NaNO2									
NaNO3									
Miscellaneous			0.017 kg	3.990 kg		3.988 kg	0.001 kg		
UO2(NO3)2			0.055 kg	12.943 kg		12.939 kg	0.005 kg		
Pu			*0.008 Ci*	*1.850 Ci*		*1.850 Ci*	*0.001 Ci*		
Am			*0.007 Ci*	*1.754 Ci*		*1.754 Ci*	*0.001 Ci*		
Cs			*0.065 Ci*	*15.428 Ci*		*15.423 Ci*	*0.006 Ci*		
Sr			*0.042 Ci*	*10.020 Ci*		*10.016 Ci*	*0.004 Ci*		
PCB									
GAZ									
NO2									
NO									
PCB									
SOLIDS + RESINS									
Volume			*0.046 m3*	*0.003 m3*		*0.000 m3*	*0.003 m3*	*0.093 m3*	*0.097 m3*
Density			*2.211*	*2.211*		*2.211*	*2.211*	*2.196*	*2.198*
Total Mass Solids + Resins			**101.798 kg**	**6.214 kg**		**0.621 kg**	**5.593 kg**	**203.115 kg**	**214.300 kg**
Wt% solids	*0.00 wt%*	*0.00 wt%*	*20.01 wt%*	*0.10 wt%*	*0.00 wt%*	*0.01 wt%*	*50.00 wt%*	*100.00 wt%*	*100.00 wt%*
Al(NO3)3									0.012 kg
Al(OH)3									
Al2O3			0.414 kg	0.025 kg		0.003 kg	0.023 kg		0.023 kg
Fe(NO3)3									0.028 kg
FeOOH			0.274 kg	0.017 kg		0.002 kg	0.015 kg		0.015 kg
C			0.077 kg	0.005 kg		0.000 kg	0.004 kg		0.004 kg
CaO			0.183 kg	0.010 kg		0.001 kg	0.009 kg		0.010 kg
Na2C2O4									
CO2									
H2O								29.724 kg	29.724 kg
SiO2			100.828 kg	6.154 kg		0.615 kg	5.539 kg		5.539 kg
Grout								173.391 kg	178.412 kg
Miscellaneous			0.038 kg	0.002 kg		0.000 kg	0.002 kg		0.007 kg
Zircaloy									
Grafoil									
HNO3									0.521 kg
H2C2O4									0.000 kg
Na2U2O7									
U			0.000 kg	0.000 kg		0.000 kg	0.000 kg		0.000 kg
U3O7			0.002 kg	0.000 kg		0.000 kg	0.000 kg		0.000 kg
UH3									
UO2			0.002 kg	0.000 kg		0.000 kg	0.000 kg		0.000 kg
UO2(NO3)2									0.005 kg
UO4-4H2O									
Pu			*0.005 Ci*	*0.000 Ci*		*0.000 Ci*	*0.000 Ci*		*0.001 Ci*
Am			*0.002 Ci*	*0.000 Ci*		*0.000 Ci*	*0.000 Ci*		*0.001 Ci*
Cs			*0.044 Ci*	*0.003 Ci*		*0.000 Ci*	*0.003 Ci*		*0.009 Ci*
Sr			*0.005 Ci*	*0.000 Ci*		*0.000 Ci*	*0.000 Ci*		*0.004 Ci*
PCB									
RESINS									
Zeolite									
OIER									
Pu									
Am			*0.000 Ci*	*0.000 Ci*		*0.000 Ci*	*0.000 Ci*		*0.000 Ci*
Cs									
TOTAL ACTIVITIES									
Total U			0.037 kg	7.819 kg		7.816 kg	0.003 kg		0.003 kg
Total Pu			0.013 Ci	1.851 Ci		1.850 Ci	0.001 Ci		0.001 Ci
Total Am			0.009 Ci	1.755 Ci		1.754 Ci	0.001 Ci		0.001 Ci
TRU			**0.022 Ci**	**3.605 Ci**		**3.603 Ci**	**0.002 Ci**		**0.002 Ci**
Total Cs			0.109 Ci	15.432 Ci		15.423 Ci	0.009 Ci		0.009 Ci
Total Sr			0.047 Ci	10.020 Ci		10.016 Ci	0.004 Ci		0.004 Ci
Beta Gamma			**0.156 Ci**	**25.452 Ci**		**25.439 Ci**	**0.013 Ci**		**0.013 Ci**
CONCENTRATION									
PCB in liquid									
PCB in solids									
Solids			226.04 g/l	1.14 g/l		0.11 g/l	712.99 g/l		2198.33 g/l
U			0.000 g/cm3	0.001 g/cm3		0.001 g/cm3	0.000 g/cm3		0.000 g/cm3
Pu total			**0.029 Ci/m3**	**0.340 Ci/m3**		**0.329 Ci/m3**	**0.120 Ci/m3**		**0.010 Ci/m3**
238 Pu			0.006 Ci/m3	0.068 Ci/m3		0.066 Ci/m3	0.024 Ci/m3		0.002 Ci/m3
239 Pu			0.012 Ci/m3	0.136 Ci/m3		0.132 Ci/m3	0.048 Ci/m3		0.004 Ci/m3
240 Pu			0.012 Ci/m3	0.136 Ci/m3		0.132 Ci/m3	0.048 Ci/m3		0.004 Ci/m3
Am			0.020 Ci/m3	0.323 Ci/m3		0.312 Ci/m3	0.095 Ci/m3		0.008 Ci/m3
TRU			0.049 Ci/m3	0.663 Ci/m3		0.641 Ci/m3	0.215 Ci/m3		0.017 Ci/m3
TRU			**44 nCi/g**	**577 nCi/g**		**558 nCi/g**	**151 nCi/g**		**8 nCi/g**
Beta Gamma			0.347 Ci/m3	4.679 Ci/m3		4.525 Ci/m3	1.594 Ci/m3		0.128 Ci/m3

DETAILED STREAM DATA SHEET FOR ONE DAILY BATCH

STREAM KW1 Nominal Case : 1 Batch 160 kg solids	ST-601 SOLUTION BEFORE NEUTRALIZATION	ST-602 UO2(NO3)2 ADDITION SOLUTION	ST-603 FE(NO3)3 / AL(NO3)3 ADDITION SOLUTION	ST-604 FINAL SOLUTION SENT TO TWRS	ST-605 NANO2 ADDITION SOLUTION	ST-607 NAOH ADDITION SOLUTION	ST-608 WATER ADJUSTMENT	ST-701 RESINS + SOLID SOLUTION AFTER DECANTATION	ST-702 SUPERNATE TO ELIMINATE
Volume	*5.623 m3*	*0.001 m3*		*8.304 m3*	*1.017 m3*	*1.425 m3*			
Density	*1.149*	*1.323*		*1.172*	*1.251*	*1.403*			
Total Mass	6,462.118 kg	1.420 kg		9,733.486 kg	1,272.500 kg	1,998.868 kg			
Number of packages									
LIQUID									
Volume	*5.623 m3*	*0.001 m3*		*8.290 m3*	*1.017 m3*	*1.425 m3*			
Density	*1.149*	*1.323*	*1.328*	*1.169*	*1.251*	*1.403*	*1.000*	*1.000*	*1.000*
Total Mass Liquid + Gaz	6,461.496 kg	1.420 kg		9,693.262 kg	1,272.500 kg	1,998.868 kg			
H2O	4,867.658 kg	0.997 kg		6,977.677 kg	763.500 kg	916.089 kg			
HNO3	1,452.018 kg								
H2C2O4	0.050 kg								
HF	9.788 kg								
NaOH				98.300 kg		1,082.780 kg			
Al(NO3)3	34.843 kg								
AlF3				13.704 kg					
Fe(NO3)3	78.238 kg								
CaO	1.551 kg			1.551 kg					
NaNO2				509.000 kg	509.000 kg				
NaNO3				2,089.042 kg					
Miscellaneous	3.988 kg			3.988 kg					
UO2(NO3)2	13.362 kg	0.423 kg							
Pu	*1.850 Ci*								
Am	*1.754 Ci*								
Cs	*15.423 Ci*			*15.423 Ci*					
Sr	*10.016 Ci*								
PCB									
GAZ									
NO2									
NO									
PCB									
SOLIDS + RESINS									
Volume	*0.000 m3*			*0.014 m3*					
Density	*2.211*			*2.852*					
Total Mass Solids + Resins	0.621 kg			40.223 kg					
Wt% solids	*0.01 wt%*	*0.00 wt%*	*0.00 wt%*	*0.41 wt%*	*0.00 wt%*	*0.00 wt%*	*0.00 wt%*	*0.00 wt%*	*0.00 wt%*
Al(NO3)3									
Al(OH)3				0.034 kg					
Al2O3	0.003 kg			0.003 kg					
Fe(NO3)3									
FeOOH	0.002 kg			28.744 kg					
C	0.000 kg			0.000 kg					
CaO	0.001 kg			0.001 kg					
Na2C2O4				0.074 kg					
CO2									
H2O									
SiO2	0.615 kg			0.615 kg					
Grout									
Miscellaneous	0.000 kg			0.000 kg					
Zircaloy									
Grafoil									
HNO3									
H2C2O4									
Na2U2O7				10.750 kg					
U	0.000 kg			0.000 kg					
U3O7	0.000 kg			0.000 kg					
UH3									
UO2	0.000 kg			0.000 kg					
UO2(NO3)2									
UO4-4H2O									
Pu	*0.000 Ci*			*1.850 Ci*					
Am	*0.000 Ci*			*1.754 Ci*					
Cs	*0.000 Ci*			*0.000 Ci*					
Sr	*0.000 Ci*			*10.016 Ci*					
PCB									
RESINS									
Zeolite									
OIER									
Pu									
Am	*0.000 Ci*			*0.000 Ci*					
Cs									
TOTAL ACTIVITIES									
Total U	8.071 kg	0.256 kg		8.071 kg					
Total Pu	1.850 Ci			1.850 Ci					
Total Am	1.754 Ci			1.754 Ci					
TRU	3.603 Ci			3.603 Ci					
Total Cs	15.423 Ci			15.423 Ci					
Total Sr	10.016 Ci			10.016 Ci					
Beta Gamma	25.439 Ci			25.439 Ci					
CONCENTRATION									
PCB in liquid									
PCB in solids									
Solids	0.11 g/l			4.84 g/l					
U	0.001 g/cm3	0.238 g/cm3		0.001 g/cm3					
Pu total	0.329 Ci/m3			0.223 Ci/m3					
238 Pu	0.066 Ci/m3			0.045 Ci/m3					
239 Pu	0.132 Ci/m3			0.089 Ci/m3					
240 Pu	0.132 Ci/m3			0.089 Ci/m3					
Am	0.312 Ci/m3			0.211 Ci/m3					
TRU	0.641 Ci/m3			0.434 Ci/m3					
TRU	558 nCi/g			370 nCi/g					
Beta Gamma	4.524 Ci/m3			3.063 Ci/m3					

DETAILED STREAM DATA SHEET FOR ONE DAILY BATCH

STREAM KW1 Nominal Case : 1 Batch 160 kg solids	ST-703 GROUT FORMERS	ST-704 FINAL GROUT WASTES TO ERDF	ST-801 ADDED WATER TO OFF-GAS TREATMENT
Volume			*0.005 m3*
Density			*1.000*
Total Mass			**5.056 kg**
Number of packages			
LIQUID			
Volume			*0.005 m3*
Density			*1.000*
Total Mass Liquid + Gaz			5.056 kg
H2O			5.056 kg
HNO3			
H2C2O4			
HF			
NaOH			
Al(NO3)3			
AlF3			
Fe(NO3)3			
CaO			
NaNO2			
NaNO3			
Miscellaneous			
UO2(NO3)2			
Pu			
Am			
Cs			
Sr			
PCB			
GAZ			
NO2			
NO			
PCB			
SOLIDS + RESINS			
Volume			
Density			
Total Mass Solids + Resins			
Wt% solids	*0.00 wt%*	*0.00 wt%*	*0.00 wt%*
Al(NO3)3			
Al(OH)3			
Al2O3			
Fe(NO3)3			
FeOOH			
C			
CaO			
Na2C2O4			
CO2			
H2O			
SiO2			
Grout			
Miscellaneous			
Zircaloy			
Grafoil			
HNO3			
H2C2O4			
Na2U2O7			
U			
U3O7			
UH3			
UO2			
UO2(NO3)2			
UO4-4H2O			
Pu			
Am			
Cs			
Sr			
PCB			
RESINS			
Zeolite			
OIER			
Pu			
Am			
Cs			
TOTAL ACTIVITIES			
Total U			
Total Pu			
Total Am			
TRU			
Total Cs			
Total Sr			
Beta Gamma			
CONCENTRATION			
PCB in liquid			
PCB in solids			
Solids			
U			
Pu total			
238 Pu			
239 Pu			
240 Pu			
Am			
TRU			
TRU			
Beta Gamma			

DETAILED STREAM DATA SHEET FOR THE WHOLE STREAM

STREAM KW1 Nominal Case - TOTAL STREAM	ST-101 SLUDGE AT INLET OF TREATMENT UNIT	ST-102 WATER ADDITION FOR SCREEN WASHING	ST-103 SLUDGE STREAM FROM RESIN SEPARATION	ST-104 RESIN STREAM FROM RESIN SEPARATION	ST-201 SLUDGE TO DISSOLVER	ST-202 RECYCLED NITRIC ACID	ST-203 HNO3 FOR DISSOLUTION	ST-204 DISSOLUTION OFF-GAS	ST-205 DISSOLUTION SOLUTION
Volume	*13.703 m3*	*0.014 m3*	*13.702 m3*	*0.016 m3*	*13.702 m3*	*0.075 m3*	*12.553 m3*	*9.976 m3*	*24.771 m3*
Density	*1.085*	*1.000*	*1.085*	*1.150*	*1.085*	*1.125*	*1.278*	*0.002*	*1.250*
Total Mass	**14,869.514 kg**	**14.275 kg**	**14,865.945 kg**	**17.843 kg**	**14,865.945 kg**	**84.919 kg**	**16,042.580 kg**	**19.763 kg**	**30,968.442 kg**
Number of packages									
LIQUID									
Volume	*13.085 m3*	*0.014 m3*	*13.085 m3*	*0.014 m3*	*13.085 m3*	*0.075 m3*	*12.553 m3*	*9.976 m3*	*24.228 m3*
Density	*1.000*	*1.000*	*1.000*	*1.000*	*1.000*	*1.125*	*1.278*	*0.002*	*1.229*
Total Mass Liquid + Gaz	13,085.172 kg	14.275 kg	13,085.172 kg	14.275 kg	13,085.172 kg	84.919 kg	16,042.580 kg	19.763 kg	29,767.416 kg
H2O	13,085.172 kg	14.275 kg	13,085.172 kg	14.275 kg	13,085.172 kg	56.386 kg	5,603.605 kg		18,934.687 kg
HNO3						28.533 kg	10,438.975 kg		9,367.794 kg
H2C2O4									
HF									
NaOH									
Al(NO3)3									387.978 kg
AlF3									
Fe(NO3)3									871.250 kg
CaO									17.269 kg
NaNO2									
NaNO3									
Miscellaneous									44.415 kg
UO2(NO3)2									144.023 kg
Pu									*20.542 Ci*
Am									*19.516 Ci*
Cs									*171.542 Ci*
Sr									*111.492 Ci*
PCB									
GAZ									
NO2								17.756 kg	
NO								2.007 kg	
PCB									
SOLIDS + RESINS									
Volume	*0.618 m3*		*0.617 m3*	*0.001 m3*	*0.617 m3*				*0.543 m3*
Density	*2.887*		*2.887*	*2.887*	*2.887*				*2.211*
Total Mass Solids + Resins	**1,784.342 kg**		**1,780.773 kg**	**3.569 kg**	**1,780.773 kg**				**1,201.026 kg**
Wt% solids	***12.00 wt%***	***0.00 wt%***	***11.98 wt%***	***20.00 wt%***	***11.98 wt%***	***0.00 wt%***	***0.00 wt%***	***0.00 wt%***	***3.88 wt%***
Al(NO3)3									
Al(OH)3									
Al2O3	97.981 kg		97.785 kg	0.196 kg	97.785 kg				4.889 kg
Fe(NO3)3									
FeOOH	323.958 kg		323.310 kg	0.648 kg	323.310 kg				3.233 kg
C	0.906 kg		0.904 kg	0.002 kg	0.904 kg				0.904 kg
CaO	19.226 kg		19.188 kg	0.038 kg	19.188 kg				1.919 kg
Na2C2O4									
CO2	5.557 kg		5.546 kg	0.011 kg	5.546 kg				
H2O									
SiO2	1,191.966 kg		1,189.582 kg	2.384 kg	1,189.582 kg				1,189.582 kg
Grout									
Miscellaneous	44.953 kg		44.864 kg	0.090 kg	44.864 kg				0.449 kg
Zircaloy									
Grafoil									
HNO3									
H2C2O4									
Na2U2O7									
U	0.873 kg		0.872 kg	0.002 kg	0.872 kg				0.000 kg
U3O7	49.946 kg		49.846 kg	0.100 kg	49.846 kg				0.025 kg
UH3									
UO2	48.974 kg		48.876 kg	0.098 kg	48.876 kg				0.024 kg
UO2(NO3)2									
UO4-4H2O									
Pu	*20.645 Ci*		*20.604 Ci*	*0.041 Ci*	*20.604 Ci*				*0.062 Ci*
Am	*19.574 Ci*		*19.535 Ci*	*0.039 Ci*	*19.535 Ci*				*0.020 Ci*
Cs	*172.403 Ci*		*172.058 Ci*	*0.345 Ci*	*172.058 Ci*				*0.516 Ci*
Sr	*111.771 Ci*		*111.548 Ci*	*0.224 Ci*	*111.548 Ci*				*0.056 Ci*
PCB									
RESINS									
Zeolite									
OIER									
Pu									
Am									*0.000 Ci*
Cs									
TOTAL ACTIVITIES									
Total U	87.217 kg		87.042 kg	0.174 kg	87.042 kg				87.042 kg
Total Pu	20.645 Ci		20.604 Ci	0.041 Ci	20.604 Ci				20.604 Ci
Total Am	19.574 Ci		19.535 Ci	0.039 Ci	19.535 Ci				19.535 Ci
TRU	**40.219 Ci**		**40.139 Ci**	**0.080 Ci**	**40.139 Ci**				**40.139 Ci**
Total Cs	172.403 Ci		172.058 Ci	0.345 Ci	172.058 Ci				172.058 Ci
Total Sr	111.771 Ci		111.548 Ci	0.224 Ci	111.548 Ci				111.548 Ci
Beta Gamma	**284.174 Ci**		**283.606 Ci**	**0.568 Ci**	**283.606 Ci**				**283.606 Ci**
CONCENTRATION									
PCB in liquid									
PCB in solids									
Solids	130.21 g/l		129.96 g/l	230.08 g/l	1.50 g/l				48.49 g/l
U	0.006 g/cm3		0.006 g/cm3	0.011 g/cm3	0.006 g/cm3				0.004 g/cm3
Pu total	**1.507 Ci/m3**		**1.504 Ci/m3**	**2.662 Ci/m3**	**1.504 Ci/m3**				**0.832 Ci/m3**
238 Pu	0.301 Ci/m3		0.301 Ci/m3	0.532 Ci/m3	0.301 Ci/m3				0.166 Ci/m3
239 Pu	0.603 Ci/m3		0.601 Ci/m3	1.065 Ci/m3	0.601 Ci/m3				0.333 Ci/m3
240 Pu	0.603 Ci/m3		0.601 Ci/m3	1.065 Ci/m3	0.601 Ci/m3				0.333 Ci/m3
Am	1.428 Ci/m3		1.426 Ci/m3	2.524 Ci/m3	1.426 Ci/m3				0.789 Ci/m3
TRU	2.935 Ci/m3		2.929 Ci/m3	5.186 Ci/m3	2.929 Ci/m3				1.620 Ci/m3
TRU	**2 705 nCi/g**		**2 700 nCi/g**	**4 508 nCi/g**	**2 700 nCi/g**				**1 296 nCi/g**
Beta Gamma	**20.738 Ci/m3**		**20.698 Ci/m3**	**36.642 Ci/m3**	**20.698 Ci/m3**				**11.449 Ci/m3**

DETAILED STREAM DATA SHEET FOR THE WHOLE STREAM

STREAM KW1 Nominal Case - TOTAL STREAM	ST-206 DISSOLVER WASHING WATER	ST-301 RESIN STREAM TO LEACHING	ST-302 TOTAL REAGENTS FOR RESINS AND SOLIDS LEACHING	ST-303 TOTAL OXALIC USED FOR RESIN LEACHING AND WASHING	ST-304 TOTAL HF USED FOR SOLIDS LEACHING AND WASHING	ST-305 TOTAL HNO3 USED FOR RESINS AND SOLIDS LEACHING	ST-306 TOTAL HNO3 USED FOR RESIN LEACHING AND WASHING	ST-307 TOTAL HNO3 USED FOR SOLIDS LEACHING AND WASHING	ST-308 TOTAL CLARIFIED SOLUTION FROM RESIN LEACHING
Volume	*4.238 m3*	*0.016 m3*	*18.160 m3*	*0.026 m3*	*9.910 m3*	*8.224 m3*	*0.011 m3*	*8.213 m3*	*0.067 m3*
Density	*1.000*	*1.150*	*1.167*	*1.100*	*1.075*	*1.278*	*1.278*	*1.278*	*1.076*
Total Mass	4,237.811 kg	17.843 kg	21,192.234 kg	28.662 kg	10,653.737 kg	10,509.835 kg	13.492 kg	10,496.343 kg	71.806 kg
Number of packages									
LIQUID									
Volume	*4.238 m3*	*0.014 m3*	*18.160 m3*	*0.026 m3*	*9.910 m3*	*8.224 m3*	*0.011 m3*	*8.213 m3*	*0.067 m3*
Density	*1.000*	*1.000*	*1.167*	*1.100*	*1.075*	*1.278*	*1.278*	*1.278*	*1.075*
Total Mass Liquid + Gaz	4,237.811 kg	14.275 kg	21,192.234 kg	28.662 kg	10,653.737 kg	10,509.835 kg	13.492 kg	10,496.343 kg	71.664 kg
H2O	4,237.811 kg	14.275 kg	14,243.591 kg	28.104 kg	10,544.446 kg	3,671.041 kg	4.713 kg	3,666.328 kg	61.665 kg
HNO3			6,838.794 kg			6,838.794 kg	8.779 kg	6,830.015 kg	6.742 kg
H2C2O4			0.558 kg	0.558 kg					0.557 kg
HF			109.291 kg		109.291 kg				
NaOH									
Al(NO3)3									0.736 kg
AlF3									
Fe(NO3)3									1.586 kg
CaO									0.031 kg
NaNO2									
NaNO3									
Miscellaneous									0.081 kg
UO2(NO3)2									0.267 kg
Pu									*0.040 Ci*
Am									*0.032 Ci*
Cs									*0.184 Ci*
Sr									*0.207 Ci*
PCB									
GAZ									
NO2									
NO									
PCB									
SOLIDS + RESINS									
Volume		*0.001 m3*							*0.000 m3*
Density		*2.887*							*2.284*
Total Mass Solids + Resins		3.569 kg							0.142 kg
Wt% solids	*0.00 wt%*	*20.00 wt%*	*0.00 wt%*	*0.00 wt%*	*0.00 wt%*	*0.00 wt%*	*0.00 wt%*	*0.00 wt%*	*0.20 wt%*
Al(NO3)3									
Al(OH)3									
Al2O3		0.196 kg							0.001 kg
Fe(NO3)3									
FeOOH		0.648 kg							0.004 kg
C		0.002 kg							0.000 kg
CaO		0.038 kg							0.000 kg
Na2C2O4									
CO2		0.011 kg							
H2O									
SiO2		2.384 kg							0.135 kg
Grout									
Miscellaneous		0.090 kg							0.001 kg
Zircaloy									
Grafoil									
HNO3									
H2C2O4									
Na2U2O7									
U		0.002 kg							0.000 kg
U3O7		0.100 kg							0.000 kg
UH3									
UO2		0.098 kg							0.000 kg
UO2(NO3)2									
UO4-4H2O									
Pu		*0.041 Ci*							*0.000 Ci*
Am		*0.039 Ci*							*0.000 Ci*
Cs		*0.345 Ci*							*0.009 Ci*
Sr		*0.224 Ci*							*0.001 Ci*
PCB									
RESINS									
Zeolite									
OIER									
Pu									
Am									
Cs									
TOTAL ACTIVITIES									
Total U		0.174 kg							0.162 kg
Total Pu		0.041 Ci							0.040 Ci
Total Am		0.039 Ci							0.033 Ci
TRU		0.080 Ci							0.073 Ci
Total Cs		0.345 Ci							0.193 Ci
Total Sr		0.224 Ci							0.208 Ci
Beta Gamma		0.568 Ci							0.400 Ci
CONCENTRATION									
PCB in liquid									
PCB in solids									
Solids		230.08 g/l							2.12 g/l
U		0.011 g/cm3							0.002 g/cm3
Pu total		2.662 Ci/m3							0.607 Ci/m3
238 Pu		0.532 Ci/m3							0.121 Ci/m3
239 Pu		1.065 Ci/m3							0.243 Ci/m3
240 Pu		1.065 Ci/m3							0.243 Ci/m3
Am		2.524 Ci/m3							0.491 Ci/m3
TRU		5.186 Ci/m3							1.097 Ci/m3
TRU		4 508 nCi/g							1 020 nCi/g
Beta Gamma		36.642 Ci/m3							6.001 Ci/m3

DETAILED STREAM DATA SHEET FOR THE WHOLE STREAM

STREAM KW1 Nominal Case - TOTAL STREAM	ST-309 TOTAL SOLIDS LEACHING EFFLUENT	ST-310 LEACHED RESINS	ST-311 LEACHED SOLIDS	ST-401 TOTAL WATER USED FOR RESINS AND SOLIDS WASHING	ST-402 TOTAL SOLUTION FROM CENTRIFUGE	ST-403 RESINS + SOLID RESIDUES FROM LEACHING	ST-404 FINAL DECLOGGING (SOLIDS)	ST-405 FINAL DECLOGGING (RESIN)	ST-407 DISSOLUTION SOLUTION AFTER CENTRIFUGE
Volume	*32.673 m3*	*0.054 m3*	*22.704 m3*	*19.863 m3*	*60.657 m3*	*5.987 m3*	*5.966 m3*	*0.012 m3*	*27.924 m3*
Density	*1.111*	*1.120*	*1.181*	*1.000*	*1.149*	*1.104*	*1.105*	*1.107*	*1.193*
Total Mass	36,294.509 kg	59.950 kg	26,822.637 kg	19,863.207 kg	69,670.944 kg	6,608.538 kg	6,594.787 kg	13.751 kg	33,304.629 kg
Number of packages									
LIQUID									
Volume	*32.669 m3*	*0.052 m3*	*22.191 m3*	*19.863 m3*	*60.626 m3*	*5.474 m3*	*5.454 m3*	*0.011 m3*	*27.896 m3*
Density	*1.111*	*1.095*	*1.158*	*1.000*	*1.148*	*1.000*	*1.002*	*1.000*	*1.192*
Total Mass Liquid + Gaz	36,285.402 kg	57.448 kg	25,687.406 kg	19,863.207 kg	69,601.644 kg	5,474.350 kg	5,462.959 kg	11.391 kg	33,244.577 kg
H2O	29,074.969 kg	47.441 kg	18,702.131 kg	19,863.207 kg	51,825.292 kg	5,468.633 kg	5,457.249 kg	11.384 kg	22,688.659 kg
HNO3	7,063.747 kg	6.747 kg	6,869.715 kg		16,198.906 kg	5.620 kg	5.615 kg	0.005 kg	9,128.417 kg
H2C2O4		0.558 kg			0.557 kg	0.000 kg		0.000 kg	
HF	109.202 kg		109.291 kg		109.202 kg	0.089 kg	0.089 kg		
NaOH									
Al(NO3)3	9.913 kg	0.737 kg	1.645 kg		388.712 kg	0.002 kg	0.001 kg	0.001 kg	378.064 kg
AlF3									
Fe(NO3)3	22.260 kg	1.587 kg	3.695 kg		872.833 kg	0.004 kg	0.003 kg	0.001 kg	848.987 kg
CaO	0.441 kg	0.031 kg	0.073 kg		17.300 kg	0.000 kg	0.000 kg	0.000 kg	16.828 kg
NaNO2									
NaNO3									
Miscellaneous	1.135 kg	0.081 kg	0.188 kg		44.496 kg	0.000 kg	0.000 kg	0.000 kg	43.280 kg
UO2(NO3)2	3.736 kg	0.267 kg	0.667 kg		144.346 kg	0.001 kg	0.001 kg	0.000 kg	140.343 kg
Pu	*0.577 Ci*	*0.040 Ci*	*0.139 Ci*		*20.634 Ci*	*0.000 Ci*	*0.000 Ci*	*0.000 Ci*	*20.017 Ci*
Am	*0.516 Ci*	*0.032 Ci*	*0.100 Ci*		*19.565 Ci*	*0.000 Ci*	*0.000 Ci*	*0.000 Ci*	*19.017 Ci*
Cs	*4.714 Ci*	*0.184 Ci*	*1.059 Ci*		*172.057 Ci*	*0.001 Ci*	*0.001 Ci*	*0.000 Ci*	*167.159 Ci*
Sr	*2.892 Ci*	*0.207 Ci*	*0.517 Ci*		*111.742 Ci*	*0.001 Ci*	*0.000 Ci*	*0.000 Ci*	*108.643 Ci*
PCB									
GAZ									
NO2									
NO									
PCB									
SOLIDS + RESINS									
Volume	*0.004 m3*	*0.001 m3*	*0.513 m3*		*0.031 m3*	*0.513 m3*	*0.512 m3*	*0.001 m3*	*0.027 m3*
Density	*2.211*	*2.284*	*2.211*		*2.211*	*2.211*	*2.211*	*2.284*	*2.211*
Total Mass Solids + Resins	9.107 kg	2.502 kg	1,135.231 kg		69.300 kg	1,134.189 kg	1,131.828 kg	2.360 kg	60.051 kg
Wt% solids	*0.03 wt%*	*4.17 wt%*	*4.23 wt%*	*0.00 wt%*	*0.10 wt%*	*17.16 wt%*	*17.16 wt%*	*17.16 wt%*	*0.18 wt%*
Al(NO3)3									
Al(OH)3									
Al2O3	0.037 kg	0.020 kg	4.622 kg		0.283 kg	4.626 kg	4.608 kg	0.018 kg	0.244 kg
Fe(NO3)3									
FeOOH	0.025 kg	0.065 kg	3.056 kg		0.190 kg	3.108 kg	3.047 kg	0.061 kg	0.162 kg
C	0.007 kg	0.002 kg	0.855 kg		0.052 kg	0.854 kg	0.852 kg	0.002 kg	0.045 kg
CaO	0.015 kg	0.008 kg	1.814 kg		0.111 kg	1.816 kg	1.808 kg	0.007 kg	0.096 kg
Na2C2O4									
CO2									
H2O									
SiO2	9.021 kg	2.384 kg	1,124.453 kg		68.635 kg	1,123.331 kg	1,121.083 kg	2.249 kg	59.479 kg
Grout									
Miscellaneous	0.003 kg	0.009 kg	0.424 kg		0.026 kg	0.431 kg	0.423 kg	0.008 kg	0.022 kg
Zircaloy									
Grafoil									
HNO3									
H2C2O4									
Na2U2O7									
U	0.000 kg	0.000 kg	0.000 kg		0.000 kg	0.000 kg	0.000 kg	0.000 kg	0.000 kg
U3O7	0.000 kg	0.007 kg	0.004 kg		0.002 kg	0.011 kg	0.004 kg	0.007 kg	0.001 kg
UH3									
UO2	0.000 kg	0.007 kg	0.004 kg		0.002 kg	0.011 kg	0.004 kg	0.007 kg	0.001 kg
UO2(NO3)2									
UO4-4H2O									
Pu	*0.000 Ci*	*0.001 Ci*	*0.006 Ci*		*0.003 Ci*	*0.007 Ci*	*0.006 Ci*	*0.001 Ci*	*0.003 Ci*
Am	*0.000 Ci*	*0.007 Ci*	*0.001 Ci*		*0.001 Ci*	*0.007 Ci*	*0.001 Ci*	*0.006 Ci*	*0.001 Ci*
Cs	*0.003 Ci*	*0.161 Ci*	*0.156 Ci*		*0.038 Ci*	*0.308 Ci*	*0.156 Ci*	*0.152 Ci*	*0.026 Ci*
Sr	*0.000 Ci*	*0.017 Ci*	*0.009 Ci*		*0.004 Ci*	*0.025 Ci*	*0.009 Ci*	*0.016 Ci*	*0.003 Ci*
PCB									
RESINS									
Zeolite									
OIER									
Pu									
Am	*0.000 Ci*		*0.000 Ci*		*0.000 Ci*	*0.000 Ci*	*0.000 Ci*		*0.000 Ci*
Cs									
TOTAL ACTIVITIES									
Total U	2.257 kg	0.174 kg	0.410 kg		87.197 kg	0.020 kg	0.007 kg	0.012 kg	84.778 kg
Total Pu	0.577 Ci	0.041 Ci	0.146 Ci		20.638 Ci	0.007 Ci	0.007 Ci	0.001 Ci	20.020 Ci
Total Am	0.516 Ci	0.039 Ci	0.101 Ci		19.567 Ci	0.007 Ci	0.001 Ci	0.006 Ci	19.018 Ci
TRU	1.093 Ci	0.080 Ci	0.247 Ci		40.204 Ci	0.015 Ci	0.008 Ci	0.007 Ci	39.038 Ci
Total Cs	4.717 Ci	0.345 Ci	1.215 Ci		172.095 Ci	0.309 Ci	0.157 Ci	0.152 Ci	167.184 Ci
Total Sr	2.893 Ci	0.224 Ci	0.526 Ci		111.746 Ci	0.025 Ci	0.009 Ci	0.016 Ci	108.646 Ci
Beta Gamma	7.610 Ci	0.569 Ci	1.741 Ci		283.840 Ci	0.334 Ci	0.166 Ci	0.168 Ci	275.830 Ci
CONCENTRATION									
PCB in liquid									
PCB in solids									
Solids	0.28 g/l	46.72 g/l	50.00 g/l		1.14 g/l	189.43 g/l	189.73 g/l	189.95 g/l	2.15 g/l
U	0.000 g/cm3	0.003 g/cm3	0.000 g/cm3		0.001 g/cm3	0.000 g/cm3	0.000 g/cm3	0.001 g/cm3	0.003 g/cm3
Pu total	0.018 Ci/m3	0.771 Ci/m3	0.006 Ci/m3		0.340 Ci/m3	0.001 Ci/m3	0.001 Ci/m3	0.065 Ci/m3	0.717 Ci/m3
238 Pu	0.004 Ci/m3	0.154 Ci/m3	0.001 Ci/m3		0.068 Ci/m3	0.000 Ci/m3	0.000 Ci/m3	0.013 Ci/m3	0.143 Ci/m3
239 Pu	0.007 Ci/m3	0.308 Ci/m3	0.003 Ci/m3		0.136 Ci/m3	0.000 Ci/m3	0.000 Ci/m3	0.026 Ci/m3	0.287 Ci/m3
240 Pu	0.007 Ci/m3	0.308 Ci/m3	0.003 Ci/m3		0.136 Ci/m3	0.000 Ci/m3	0.000 Ci/m3	0.026 Ci/m3	0.287 Ci/m3
Am	0.016 Ci/m3	0.731 Ci/m3	0.004 Ci/m3		0.323 Ci/m3	0.001 Ci/m3	0.000 Ci/m3	0.516 Ci/m3	0.681 Ci/m3
TRU	0.033 Ci/m3	1.502 Ci/m3	0.011 Ci/m3		0.663 Ci/m3	0.002 Ci/m3	0.001 Ci/m3	0.581 Ci/m3	1.398 Ci/m3
TRU	30 nCi/g	1 342 nCi/g	9 nCi/g		577 nCi/g	2 nCi/g	1 nCi/g	525 nCi/g	1 172 nCi/g
Beta Gamma	0.233 Ci/m3	10.614 Ci/m3	0.077 Ci/m3		4.679 Ci/m3	0.056 Ci/m3	0.028 Ci/m3	13.523 Ci/m3	9.878 Ci/m3

DETAILED STREAM DATA SHEET FOR THE WHOLE STREAM

STREAM KW1 Nominal Case - TOTAL STREAM	ST-408 TOTAL WATER USED FOR RESIN LEACHING AND WASHING	ST-409 TOTAL WATER FOR SOLIDS LEACHING AND WASHING	ST-410 SOLIDS FROM CENTRIFUGE	ST-501 TOTAL SOLUTION TO FILTRATION	ST-502 FILTER RINSING WATER	ST-503 TOTAL SOLUTION TO ADJUST	ST-504 RINSED FILTER TO CONDITIONING	ST-505 GROUT FORMERS FOR FILTER CONDITIONING	ST-506 CONDITIONED FILTERS
Volume	*0.026 m3*	*19.838 m3*	*5.022 m3*	*60.657 m3*	*2.504 m3*	*62.694 m3*	*0.087 m3*	*1.032 m3*	*1.087 m3*
Density	*1.000*	*1.000*	*1.129*	*1.149*	*1.000*	*1.149*	*1.426*	*2.195*	*2.198*
Total Mass	25.607 kg	19,837.600 kg	5,672.565 kg	69,670.944 kg	2,504.363 kg	72,050.567 kg	124.740 kg	2,265.164 kg	2,389.904 kg
Number of packages							5.525		5.525
LIQUID									
Volume	*0.026 m3*	*19.838 m3*	*4.509 m3*	*60.626 m3*	*2.504 m3*	*62.691 m3*	*0.059 m3*		
Density	*1.000*	*1.000*	*1.006*	*1.148*	*1.000*	*1.149*	*1.052*		*1.001*
Total Mass Liquid + Gaz	25.607 kg	19,837.600 kg	4,537.295 kg	69,601.644 kg	2,504.363 kg	72,043.637 kg	62.370 kg		
H2O	25.607 kg	19,837.600 kg	4,491.352 kg	51,825.292 kg	2,504.363 kg	54,273.657 kg	55.998 kg		
HNO3			39.730 kg	16,198.906 kg		16,193.100 kg	5.806 kg		
H2C2O4				0.557 kg		0.557 kg	0.000 kg		
HF				109.202 kg		109.162 kg	0.039 kg		
NaOH									
Al(NO3)3			1.645 kg	388.712 kg		388.573 kg	0.139 kg		
AlF3									
Fe(NO3)3			3.695 kg	872.833 kg		872.521 kg	0.313 kg		
CaO			0.073 kg	17.300 kg		17.294 kg	0.006 kg		
NaNO2									
NaNO3									
Miscellaneous			0.188 kg	44.496 kg		44.480 kg	0.016 kg		
UO2(NO3)2			0.611 kg	144.346 kg		144.294 kg	0.052 kg		
Pu			*0.087 Ci*	*20.634 Ci*		*20.627 Ci*	*0.007 Ci*		
Am			*0.083 Ci*	*19.565 Ci*		*19.558 Ci*	*0.007 Ci*		
Cs			*0.728 Ci*	*172.057 Ci*		*171.995 Ci*	*0.062 Ci*		
Sr			*0.473 Ci*	*111.742 Ci*		*111.702 Ci*	*0.040 Ci*		
PCB									
GAZ									
NO2									
NO									
PCB									
SOLIDS + RESINS									
Volume			*0.513 m3*	*0.031 m3*		*0.003 m3*	*0.028 m3*	*1.032 m3*	*1.087 m3*
Density			*2.211*	*2.211*		*2.211*	*2.211*	*2.195*	*2.198*
Total Mass Solids + Resins			1,135.270 kg	69.300 kg		6.930 kg	62.370 kg	2,265.164 kg	2,389.904 kg
Wt% solids	*0.00 wt%*	*0.00 wt%*	*20.01 wt%*	*0.10 wt%*	*0.00 wt%*	*0.01 wt%*	*50.00 wt%*	*100.00 wt%*	*100.00 wt%*
Al(NO3)3									0.139 kg
Al(OH)3									
Al2O3			4.622 kg	0.283 kg		0.028 kg	0.254 kg		0.254 kg
Fe(NO3)3									0.313 kg
FeOOH			3.056 kg	0.190 kg		0.019 kg	0.171 kg		0.171 kg
C			0.855 kg	0.052 kg		0.005 kg	0.047 kg		0.047 kg
CaO			1.814 kg	0.111 kg		0.011 kg	0.100 kg		0.106 kg
Na2C2O4									
CO2									
H2O								331.487 kg	331.487 kg
SiO2			1.124.453 kg	68.635 kg		6.863 kg	61.771 kg		61.771 kg
Grout								1,933.677 kg	1,989.675 kg
Miscellaneous			0.424 kg	0.026 kg		0.003 kg	0.024 kg		0.079 kg
Zircaloy									
Grafoil									
HNO3									5.806 kg
H2C2O4									0.000 kg
Na2U2O7									
U			0.000 kg	0.000 kg		0.000 kg	0.000 kg		0.000 kg
U3O7			0.024 kg	0.002 kg		0.000 kg	0.002 kg		0.002 kg
UH3									
UO2			0.023 kg	0.002 kg		0.000 kg	0.002 kg		0.002 kg
UO2(NO3)2									0.052 kg
UO4-4H2O									
Pu			*0.058 Ci*	*0.003 Ci*		*0.000 Ci*	*0.003 Ci*		*0.011 Ci*
Am			*0.018 Ci*	*0.001 Ci*		*0.000 Ci*	*0.001 Ci*		*0.008 Ci*
Cs			*0.488 Ci*	*0.038 Ci*		*0.004 Ci*	*0.034 Ci*		*0.096 Ci*
Sr			*0.053 Ci*	*0.004 Ci*		*0.000 Ci*	*0.004 Ci*		*0.044 Ci*
PCB									
RESINS									
Zeolite									
OIER									
Pu									
Am			*0.000 Ci*	*0.000 Ci*		*0.000 Ci*	*0.000 Ci*		*0.000 Ci*
Cs									
TOTAL ACTIVITIES									
Total U			0.410 kg	87.197 kg		87.163 kg	0.034 kg		0.034 kg
Total Pu			0.146 Ci	20.638 Ci		20.627 Ci	0.011 Ci		0.011 Ci
Total Am			0.101 Ci	19.567 Ci		19.558 Ci	0.008 Ci		0.008 Ci
TRU			0.247 Ci	40.204 Ci		40.185 Ci	0.019 Ci		0.019 Ci
Total Cs			1.215 Ci	172.095 Ci		171.999 Ci	0.096 Ci		0.096 Ci
Total Sr			0.526 Ci	111.746 Ci		111.702 Ci	0.044 Ci		0.044 Ci
Beta Gamma			1.741 Ci	283.840 Ci		283.701 Ci	0.139 Ci		0.139 Ci
CONCENTRATION									
PCB in liquid									
PCB in solids									
Solids			226.04 g/l	1.14 g/l		0.11 g/l	712.99 g/l		2198.33 g/l
U			0.000 g/cm3	0.001 g/cm3		0.001 g/cm3	0.000 g/cm3		0.000 g/cm3
Pu total			0.029 Ci/m3	0.340 Ci/m3		0.329 Ci/m3	0.120 Ci/m3		0.010 Ci/m3
238 Pu			0.006 Ci/m3	0.068 Ci/m3		0.066 Ci/m3	0.024 Ci/m3		0.002 Ci/m3
239 Pu			0.012 Ci/m3	0.136 Ci/m3		0.132 Ci/m3	0.048 Ci/m3		0.004 Ci/m3
240 Pu			0.012 Ci/m3	0.136 Ci/m3		0.132 Ci/m3	0.048 Ci/m3		0.004 Ci/m3
Am			0.020 Ci/m3	0.323 Ci/m3		0.312 Ci/m3	0.095 Ci/m3		0.008 Ci/m3
TRU			0.049 Ci/m3	0.663 Ci/m3		0.641 Ci/m3	0.215 Ci/m3		0.017 Ci/m3
TRU			44 nCi/g	577 nCi/g		558 nCi/g	151 nCi/g		8 nCi/g
Beta Gamma			0.347 Ci/m3	4.679 Ci/m3		4.525 Ci/m3	1.594 Ci/m3		0.128 Ci/m3

DETAILED STREAM DATA SHEET FOR THE WHOLE STREAM

STREAM KW1 Nominal Case - TOTAL STREAM	ST-601 SOLUTION BEFORE NEUTRALIZATION	ST-602 UO2(NO3)2 ADDITION SOLUTION	ST-603 FE(NO3)3 / AL(NO3)3 ADDITION SOLUTION	ST-604 FINAL SOLUTION SENT TO TWRS	ST-605 NANO2 ADDITION SOLUTION	ST-607 NAOH ADDITION SOLUTION	ST-608 WATER ADJUSTMENT	ST-701 RESINS + SOLID SOLUTION AFTER DECANTATION	ST-702 SUPERNATE TO ELIMINATE
Volume	*62.707 m3*	*0.012 m3*		*92.607 m3*	*11.342 m3*	*15.889 m3*			
Density	*1.149*	*1.323*		*1.172*	*1.251*	*1.403*			
Total Mass	72,066.408 kg	15.841 kg		108,549.149 kg	14,191.092 kg	22,291.649 kg			
Number of packages									
LIQUID									
Volume	*62.704 m3*	*0.012 m3*		*92.450 m3*	*11.342 m3*	*15.889 m3*			
Density	*1.149*	*1.323*	*1.328*	*1.169*	*1.251*	*1.403*	*1.000*	*1.000*	*1.000*
Total Mass Liquid + Gaz	72,059.478 kg	15.841 kg		108,100.573 kg	14,191.092 kg	22,291.649 kg			
H2O	54,284.780 kg	11.124 kg		77,815.998 kg	8,514.655 kg	10,216.344 kg			
HNO3	16,193.100 kg								
H2C2O4	0.557 kg								
HF	109.162 kg								
NaOH				1,096.255 kg		12,075.305 kg			
Al(NO3)3	388.573 kg								
AlF3				152.827 kg					
Fe(NO3)3	872.521 kg								
CaO	17.294 kg			17.294 kg					
NaNO2				5,676.437 kg	5,676.437 kg				
NaNO3				23,297.282 kg					
Miscellaneous	44.480 kg			44.480 kg					
UO2(NO3)2	149.012 kg	4.718 kg							
Pu	*20.627 Ci*								
Am	*19.558 Ci*								
Cs	*171.995 Ci*			*171.995 Ci*					
Sr	*111.702 Ci*								
PCB									
GAZ									
NO2									
NO									
PCB									
SOLIDS + RESINS									
Volume	*0.003 m3*			*0.157 m3*					
Density	*2.211*			*2.852*					
Total Mass Solids + Resins	6.930 kg			448.576 kg					
Wt% solids	*0.01 wt%*	*0.00 wt%*	*0.00 wt%*	*0.41 wt%*	*0.00 wt%*	*0.00 wt%*	*0.00 wt%*	*0.00 wt%*	*0.00 wt%*
Al(NO3)3									
Al(OH)3				0.383 kg					
Al2O3	0.028 kg			0.028 kg					
Fe(NO3)3									
FeOOH	0.019 kg			320.563 kg					
C	0.005 kg			0.005 kg					
CaO	0.011 kg			0.011 kg					
Na2C2O4				0.829 kg					
CO2									
H2O									
SiO2	6.863 kg			6.863 kg					
Grout									
Miscellaneous	0.003 kg			0.003 kg					
Zircaloy									
Grafoil									
HNO3									
H2C2O4									
Na2U2O7				119.890 kg					
U	0.000 kg			0.000 kg					
U3O7	0.000 kg			0.000 kg					
UH3									
UO2	0.000 kg			0.000 kg					
UO2(NO3)2									
UO4-4H2O									
Pu	*0.000 Ci*			*20.627 Ci*					
Am	*0.000 Ci*			*19.558 Ci*					
Cs	*0.004 Ci*			*0.004 Ci*					
Sr	*0.000 Ci*			*111.702 Ci*					
PCB									
RESINS									
Zeolite									
OIER									
Pu									
Am	*0.000 Ci*			*0.000 Ci*					
Cs									
TOTAL ACTIVITIES									
Total U	90.012 kg	2.850 kg		90.012 kg					
Total Pu	20.627 Ci			20.627 Ci					
Total Am	19.558 Ci			19.558 Ci					
TRU	40.185 Ci			40.185 Ci					
Total Cs	171.999 Ci			171.999 Ci					
Total Sr	111.702 Ci			111.702 Ci					
Beta Gamma	283.701 Ci			283.701 Ci					
CONCENTRATION									
PCB in liquid									
PCB in solids									
Solids	0.11 g/l			4.84 g/l					
U	0.001 g/cm3	0.238 g/cm3		0.001 g/cm3					
Pu total	0.329 Ci/m3			0.223 Ci/m3					
238 Pu	0.066 Ci/m3			0.045 Ci/m3					
239 Pu	0.132 Ci/m3			0.089 Ci/m3					
240 Pu	0.132 Ci/m3			0.089 Ci/m3					
Am	0.312 Ci/m3			0.211 Ci/m3					
TRU	0.641 Ci/m3			0.434 Ci/m3					
TRU	558 nCi/g			370 nCi/g					
Beta Gamma	4.524 Ci/m3			3.063 Ci/m3					

DETAILED STREAM DATA SHEET FOR THE WHOLE STREAM

STREAM KW1 Nominal Case - TOTAL STREAM	ST-703 GROUT FORMERS	ST-704 FINAL GROUT WASTES TO ERDF	ST-801 ADDED WATER TO OFF-GAS TREATMENT
Volume			*0.056 m3*
Density			*1.000*
Total Mass			56.386 kg
Number of packages			
LIQUID			
Volume			*0.056 m3*
Density			*1.000*
Total Mass Liquid + Gaz			56.386 kg
H2O			56.386 kg
HNO3			
H2C2O4			
HF			
NaOH			
Al(NO3)3			
AlF3			
Fe(NO3)3			
CaO			
NaNO2			
NaNO3			
Miscellaneous			
UO2(NO3)2			
Pu			
Am			
Cs			
Sr			
PCB			
GAZ			
NO2			
NO			
PCB			
SOLIDS + RESINS			
Volume			
Density			
Total Mass Solids + Resins			
Wt% solids	*0.00 wt%*	*0.00 wt%*	*0.00 wt%*
Al(NO3)3			
Al(OH)3			
Al2O3			
Fe(NO3)3			
FeOOH			
C			
CaO			
Na2C2O4			
CO2			
H2O			
SiO2			
Grout			
Miscellaneous			
Zircaloy			
Grafoil			
HNO3			
H2C2O4			
Na2U2O7			
U			
U3O7			
UH3			
UO2			
UO2(NO3)2			
UO4-4H2O			
Pu			
Am			
Cs			
Sr			
PCB			
RESINS			
Zeolite			
OIER			
Pu			
Am			
Cs			
TOTAL ACTIVITIES			
Total U			
Total Pu			
Total Am			
TRU			
Total Cs			
Total Sr			
Beta Gamma			
CONCENTRATION			
PCB in liquid			
PCB in solids			
Solids			
U			
Pu total			
238 Pu			
239 Pu			
240 Pu			
Am			
TRU			
TRU			
Beta Gamma			

APPENDIX D

KW2 STREAM

This page intentionally left blank.

SLUDGE TREATMENT
CHEMICAL FLOW SHEET

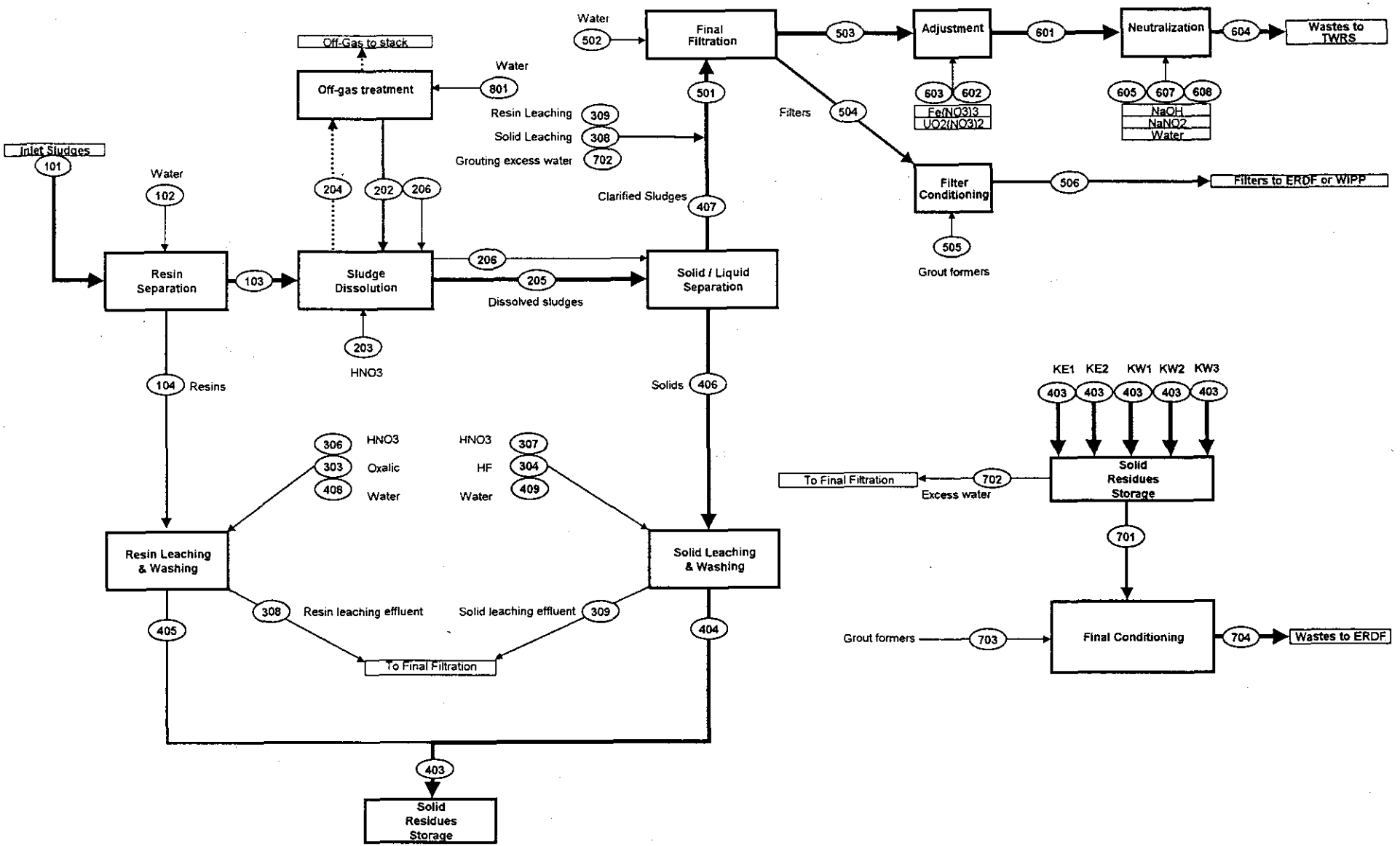

SLUDGE TREATMENT
MATERIAL BALANCE

STREAM KW2
Nominal Case : □1 Batch 160 kg solids
OF BATCHES : 18.2

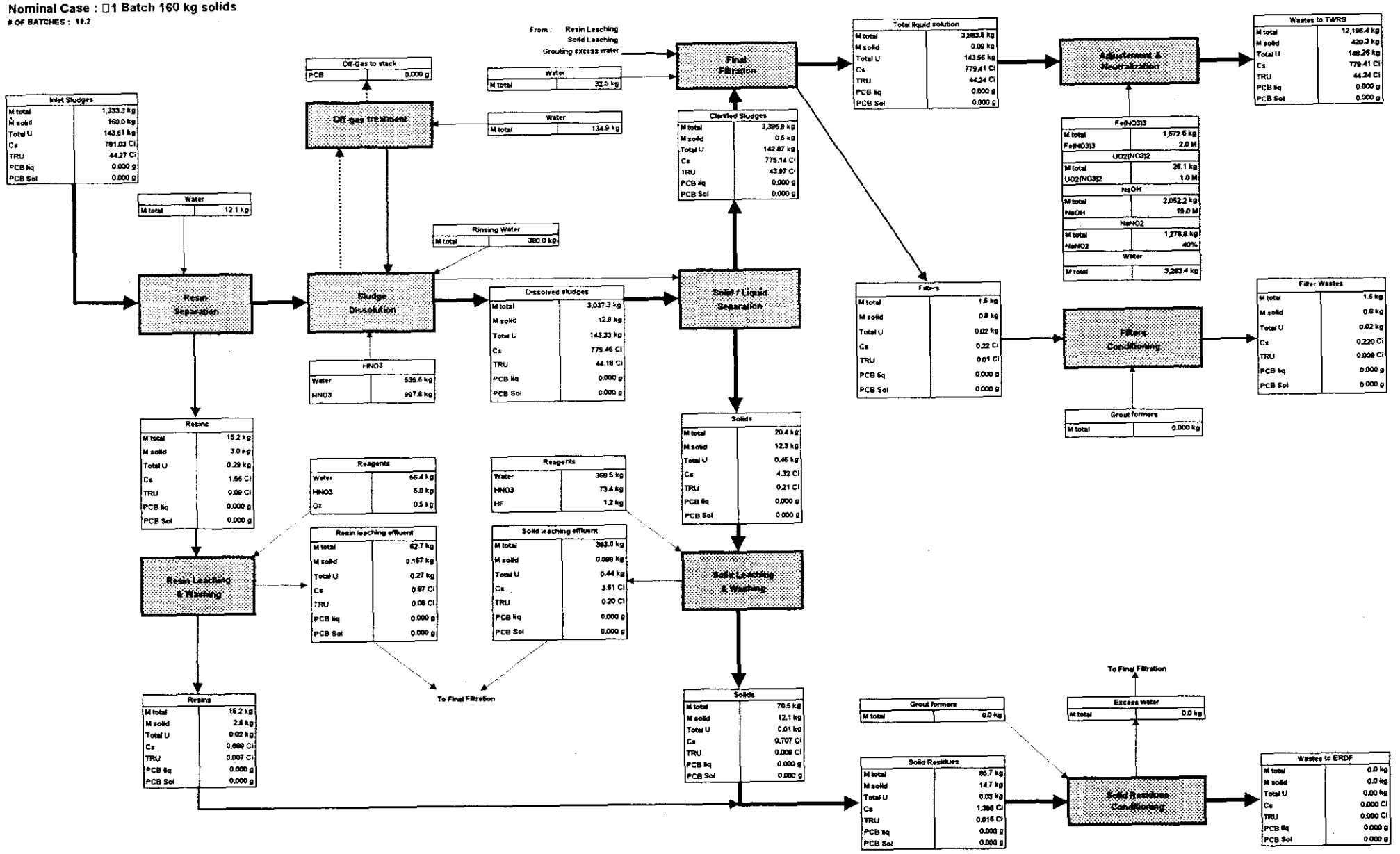

SLUDGE TREATMENT
CONCENTRATION

STREAM KW2
Nominal Case : □1 Batch 160 kg solids

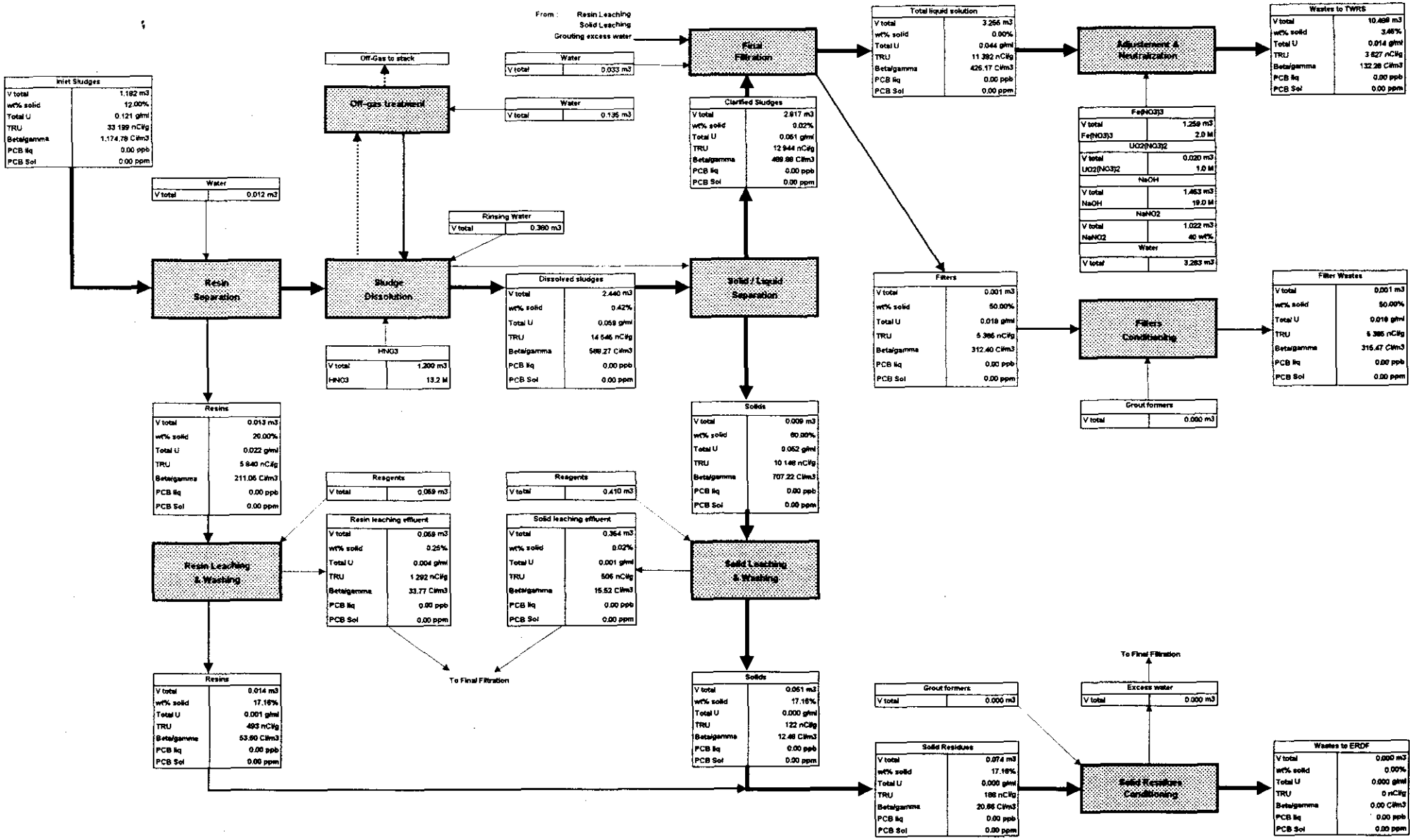

Requirements

STREAM KW2	Requirements		Obtained results
Effluent sent to TWRS	**TWRS Requirements**		
PCB in liq	< 0.5 ppb		0.00 ppb
PCB in sol	< 2 ppm		0.000 ppm
Concentration	< 40 g/l		40.07 g/l
Na(NO3) concentration			2.35 M
NaOH Concentration	Req on [OH-] : 0.24 M		0.24 M
NaOH + Na(NO2) Concentration	Req on [OH-]+[NO2-] : 0.94 M		0.94 M
Na(NO2) concentration	Req on [NO2-] : none		0.71 M
Volume generated m3			**107 m3**
Filters : Grouted sent to ERDF or sent as-is to WIPP	**ERDF Requirements**	**WIPP Requirements**	
PCB (ppm)		< 2 ppm	0.000 ppm
U g/ml	< 0.026 g/ml		0.0182 g/ml
Pu(Total)	Ci/m3		6.204 Ci/m3
238 Pu	< 1.5 Ci/m3		1.241 Ci/m3
239 Pu	< 0.029 Ci/m3		2.482 Ci/m3
240 Pu	< 0.029 Ci/m3		2.482 Ci/m3
Am	< 0.05 Ci/m3		3.257 Ci/m3
TRU	< 100 nanoCi/g	> 100 nanoCi/g	5 385 nCi/g
Volume generated m3			0.1 m3
Number of 0.2 m3 drums			**0.6**

DETAILED STREAM DATA SHEET FOR ONE DAILY BATCH

STREAM KW2 Nominal Case : 1 Batch 160 kg solids	ST-101 SLUDGE AT INLET OF TREATMENT UNIT	ST-102 WATER ADDITION FOR SCREEN WASHING	ST-103 SLUDGE STREAM FROM RESIN SEPARATION	ST-104 RESIN STREAM FROM RESIN SEPARATION	ST-201 SLUDGE TO DISSOLVER	ST-202 RECYCLED NITRIC ACID	ST-203 HNO3 FOR DISSOLUTION	ST-204 DISSOLUTION OFF-GAS	ST-205 DISSOLUTION SOLUTION
Volume	*1.182 m3*	*0.012 m3*	*1.182 m3*	*0.013 m3*	*1.182 m3*	*0.181 m3*	*1.200 m3*	*24.269 m3*	*2.440 m3*
Density	*1.128*	*1.000*	*1.125*	*1.151*	*1.125*	*1.125*	*1.278*	*0.001*	*1.245*
Total Mass	**1,333.333 kg**	**12.127 kg**	**1,330.302 kg**	**15.158 kg**	**1,330.302 kg**	**203.144 kg**	**1,533.478 kg**	**32.503 kg**	**3,037.309 kg**
Number of packages									
LIQUID									
Volume	*1.173 m3*	*0.012 m3*	*1.173 m3*	*0.012 m3*	*1.173 m3*	*0.181 m3*	*1.200 m3*	*24.269 m3*	*2.437 m3*
Density	*1.000*	*1.000*	*1.000*	*1.000*	*1.000*	*1.125*	*1.278*	*0.001*	*1.241*
Total Mass Liquid + Gaz	**1,173.333 kg**	**12.127 kg**	**1,173.333 kg**	**12.127 kg**	**1,173.333 kg**	**203.144 kg**	**1,533.478 kg**	**32.503 kg**	**3,024.406 kg**
H2O	1,173.333 kg	12.127 kg	1,173.333 kg	12.127 kg	1,173.333 kg	134.888 kg	535.637 kg		1,864.443 kg
HNO3						68.256 kg	997.840 kg		922.000 kg
H2C2O4									
HF									
NaOH									
Al(NO3)3									
AlF3									
Fe(NO3)3									
CaO									
NaNO2									
NaNO3									
Miscellaneous									0.811 kg
UO2(NO3)2									237.152 kg
Pu									*24.264 Ci*
Am									*19.820 Ci*
Cs									*777.125 Ci*
Sr									*606.594 Ci*
PCB									
GAZ									
NO2									
NO								32.503 kg	
PCB									
SOLIDS + RESINS									
Volume	*0.009 m3*		*0.009 m3*	*0.001 m3*	*0.009 m3*				*0.002 m3*
Density	*17.516*		*17.798*	*2.922*	*17.798*				*5.448*
Total Mass Solids + Resins	**160.000 kg**		**156.968 kg**	**3.032 kg**	**156.968 kg**				**12.903 kg**
Wt% solids	***12.00 wt%***	***0.00 wt%***	***11.80 wt%***	***20.00 wt%***	***11.80 wt%***	***0.00 wt%***	***0.00 wt%***	***0.00 wt%***	***0.42 wt%***
Al(NO3)3									
Al(OH)3									
Al2O3									
Fe(NO3)3									
FeOOH									
C									
CaO									
Na2C2O4									
CO2									
H2O									
SiO2									
Grout									
Miscellaneous	0.821 kg		0.819 kg	0.002 kg	0.819 kg				0.008 kg
Zircaloy	10.121 kg		10.101 kg	0.020 kg	10.101 kg				10.101 kg
Grafoil	5.445 kg		2.723 kg	2.723 kg	2.723 kg				2.723 kg
HNO3									
H2C2O4									
Na2U2O7									
U	143.613 kg		143.326 kg	0.287 kg	143.326 kg				0.072 kg
U3O7									
UH3									
UO2									
UO2(NO3)2									
UO4-4H2O									
Pu	*24.386 Ci*		*24.337 Ci*	*0.049 Ci*	*24.337 Ci*				*0.073 Ci*
Am	*19.880 Ci*		*19.840 Ci*	*0.040 Ci*	*19.840 Ci*				*0.020 Ci*
Cs	*781.026 Ci*		*779.464 Ci*	*1.562 Ci*	*779.464 Ci*				*2.338 Ci*
Sr	*608.114 Ci*		*606.897 Ci*	*1.216 Ci*	*606.897 Ci*				*0.303 Ci*
PCB									
RESINS									
Zeolite									
OIER									
Pu									
Am									
Cs									
TOTAL ACTIVITIES									
Total U	143.613 kg		143.326 kg	0.287 kg	143.326 kg				143.326 kg
Total Pu	24.386 Ci		24.337 Ci	0.049 Ci	24.337 Ci				24.337 Ci
Total Am	19.880 Ci		19.840 Ci	0.040 Ci	19.840 Ci				19.840 Ci
TRU	**44.266 Ci**		**44.177 Ci**	**0.089 Ci**	**44.177 Ci**				**44.177 Ci**
Total Cs	781.026 Ci		779.464 Ci	1.562 Ci	779.464 Ci				779.464 Ci
Total Sr	608.114 Ci		606.897 Ci	1.216 Ci	606.897 Ci				606.897 Ci
Beta Gamma	**1 389.139 Ci**		**1 386.361 Ci**	**2.778 Ci**	**1 386.361 Ci**				**1 386.361 Ci**
CONCENTRATION									
PCB in liquid									
PCB in solids									
Solids	135.31 g/l		132.78 g/l	230.30 g/l	20.59 g/l				5.29 g/l
U	0.121 g/cm3		0.121 g/cm3	0.022 g/cm3	0.121 g/cm3				0.059 g/cm3
Pu total	**20.623 Ci/m3**		**20.587 Ci/m3**	**3.705 Ci/m3**	**20.587 Ci/m3**				**9.976 Ci/m3**
238 Pu	4.125 Ci/m3		4.117 Ci/m3	0.741 Ci/m3	4.117 Ci/m3				1.995 Ci/m3
239 Pu	8.249 Ci/m3		8.235 Ci/m3	1.482 Ci/m3	8.235 Ci/m3				3.990 Ci/m3
240 Pu	8.249 Ci/m3		8.235 Ci/m3	1.482 Ci/m3	8.235 Ci/m3				3.990 Ci/m3
Am	16.812 Ci/m3		16.783 Ci/m3	3.020 Ci/m3	16.783 Ci/m3				8.133 Ci/m3
TRU	37.435 Ci/m3		37.370 Ci/m3	6.725 Ci/m3	37.370 Ci/m3				18.108 Ci/m3
TRU	**33 199 nCi/g**		**33 208 nCi/g**	**5 840 nCi/g**	**33 208 nCi/g**				**14 545 nCi/g**
Beta Gamma	1,174.780 Ci/m3		1,172.743 Ci/m3	211.050 Ci/m3	1,172.743 Ci/m3				568.269 Ci/m3

DETAILED STREAM DATA SHEET FOR ONE DAILY BATCH

STREAM KW2 Nominal Case : 1 Batch 160 kg solids	ST-200 DISSOLVER WASHING WATER	ST-301 RESIN STREAM TO LEACHING	ST-302 TOTAL REAGENTS FOR RESINS AND SOLIDS LEACHING	ST-303 TOTAL OXALIC USED FOR RESIN LEACHING AND WASHING	ST-304 TOTAL HF USED FOR SOLIDS LEACHING AND WASHING	ST-305 TOTAL HNO3 USED FOR RESINS AND SOLIDS LEACHING	ST-306 TOTAL HNO3 USED FOR RESIN LEACHING AND WASHING	ST-307 TOTAL HNO3 USED FOR SOLIDS LEACHING AND WASHING	ST-308 TOTAL CLARIFIED SOLUTION FROM RESIN LEACHING
Volume	*0.380 m3*	*0.013 m3*	*0.228 m3*	*0.023 m3*	*0.109 m3*	*0.096 m3*	*0.007 m3*	*0.088 m3*	*0.059 m3*
Density	*1.000*	*1.151*	*1.163*	*1.100*	*1.075*	*1.278*	*1.278*	*1.278*	*1.058*
Total Mass	**380.000 kg**	**15.158 kg**	**265.070 kg**	**25.311 kg**	**117.691 kg**	**122.068 kg**	**9.201 kg**	**112.867 kg**	**62.716 kg**
Number of packages									
LIQUID									
Volume	*0.380 m3*	*0.012 m3*	*0.228 m3*	*0.023 m3*	*0.109 m3*	*0.096 m3*	*0.007 m3*	*0.088 m3*	*0.059 m3*
Density	*1.000*	*1.000*	*1.163*	*1.100*	*1.075*	*1.278*	*1.278*	*1.278*	*1.057*
Total Mass Liquid + Gaz	**380.000 kg**	**12.127 kg**	**265.070 kg**	**25.311 kg**	**117.691 kg**	**122.068 kg**	**9.201 kg**	**112.867 kg**	**62.560 kg**
H2O	380.000 kg	12.127 kg	184.030 kg	24.851 kg	116.541 kg	42.638 kg	3.214 kg	39.424 kg	55.945 kg
HNO3			79.430 kg			79.430 kg	5.987 kg	73.443 kg	5.714 kg
H2C2O4			0.460 kg	0.460 kg					0.460 kg
HF			1.150 kg		1.150 kg				
NaOH									
Al(NO3)3									
AlF3									
Fe(NO3)3									
CaO									
NaNO2									
NaNO3									
Miscellaneous									0.001 kg
UO2(NO3)2									0.439 kg
Pu									*0.048 Ci*
Am									*0.033 Ci*
Cs									*0.832 Ci*
Sr									*1.124 Ci*
PCB									
GAZ									
NO2									
NO									
PCB									
SOLIDS + RESINS									
Volume		*0.001 m3*							*0.000 m3*
Density		*2.922*							*1.378*
Total Mass Solids + Resins		**3.032 kg**							**0.157 kg**
Wt% solids	*0.00 wt%*	*20.00 wt%*	*0.00 wt%*	*0.00 wt%*	*0.00 wt%*	*0.00 wt%*	*0.00 wt%*	*0.00 wt%*	*0.25 wt%*
Al(NO3)3									
Al(OH)3									
Al2O3									
Fe(NO3)3									
FeOOH									
C									
CaO									
Na2C2O4									
CO2									
H2O									
SiO2									
Grout									
Miscellaneous		0.002 kg							0.000 kg
Zircaloy		0.020 kg							0.001 kg
Grafoil		2.723 kg							0.154 kg
HNO3									
H2C2O4									
Na2U2O7									
U		0.287 kg							0.001 kg
U3O7									
UH3									
UO2									
UO2(NO3)2									
UO4-4H2O									
Pu		*0.049 Ci*							*0.000 Ci*
Am		*0.040 Ci*							*0.000 Ci*
Cs		*1.562 Ci*							*0.041 Ci*
Sr		*1.216 Ci*							*0.005 Ci*
PCB									
RESINS									
Zeolite									
OIER									
Pu									
Am									
Cs									
TOTAL ACTIVITIES									
Total U		0.287 kg							0.267 kg
Total Pu		0.049 Ci							0.048 Ci
Total Am		0.040 Ci							0.033 Ci
TRU		**0.089 Ci**							**0.081 Ci**
Total Cs		1.562 Ci							0.873 Ci
Total Sr		1.216 Ci							1.129 Ci
Beta Gamma		**2.778 Ci**							**2.002 Ci**
CONCENTRATION									
PCB in liquid									
PCB in solids									
Solids		230 30 g/l							2.64 g/l
U		0.022 g/cm3							0.004 g/cm3
Pu total		**3.705 Ci/m3**							**0.806 Ci/m3**
238 Pu		0.741 Ci/m3							0.161 Ci/m3
239 Pu		1.482 Ci/m3							0.322 Ci/m3
240 Pu		1.482 Ci/m3							0.322 Ci/m3
Am		3.020 Ci/m3							0.561 Ci/m3
TRU		6.725 Ci/m3							1.367 Ci/m3
TRU		**5 840 nCi/g**							**1 292 nCi/g**
Beta Gamma		**211.050 Ci/m3**							**33.767 Ci/m3**

DETAILED STREAM DATA SHEET FOR ONE DAILY BATCH

STREAM KW2 Nominal Case : 1 Batch 160 kg solids	ST-309 TOTAL SOLIDS LEACHING EFFLUENT	ST-310 LEACHED RESINS	ST-311 LEACHED SOLIDS	ST-401 TOTAL WATER USED FOR RESINS AND SOLIDS WASHING	ST-402 TOTAL SOLUTION FROM CENTRIFUGE	ST-403 RESINS + SOLID RESIDUES FROM LEACHING	ST-404 FINAL DECLOGGING (SOLIDS)	ST-405 FINAL DECLOGGING (RESIN)	ST-407 DISSOLUTION SOLUTION AFTER CENTRIFUGE
Volume	*0.354 m3*	*0.045 m3*	*0.244 m3*	*0.241 m3*	*3.246 m3*	*0.074 m3*	*0.061 m3*	*0.014 m3*	*2.817 m3*
Density	*1.111*	*1.091*	*1.195*	*1.000*	*1.187*	*1.156*	*1.164*	*1.049*	*1.206*
Total Mass	**392.975 kg**	**49.616 kg**	**291.491 kg**	**240.823 kg**	**3,852.570 kg**	**85.724 kg**	**70.528 kg**	**15.195 kg**	**3,396.879 kg**
Number of packages									
LIQUID									
Volume	*0.354 m3*	*0.043 m3*	*0.242 m3*	*0.241 m3*	*3.246 m3*	*0.071 m3*	*0.058 m3*	*0.013 m3*	*2.817 m3*
Density	*1.110*	*1.078*	*1.156*	*1.000*	*1.186*	*1.000*	*1.002*	*1.000*	*1.206*
Total Mass Liquid + Gaz	**392.877 kg**	**46.851 kg**	**279.350 kg**	**240.823 kg**	**3,851.671 kg**	**71.011 kg**	**58.424 kg**	**12.588 kg**	**3,396.234 kg**
H2O	315.174 kg	40.230 kg	204.200 kg	240.823 kg	2,610.525 kg	70.944 kg	58.363 kg	12.581 kg	2,239.406 kg
HNO3	75.819 kg	5.720 kg	73.800 kg		1,001.041 kg	0.065 kg	0.059 kg	0.006 kg	919.509 kg
H2C2O4		0.460 kg			0.460 kg	0.000 kg		0.000 kg	
HF	1.149 kg		1.150 kg		1.149 kg	0.001 kg	0.001 kg		
NaOH									
Al(NO3)3									
AlF3									
Fe(NO3)3									
CaO									
NaNO2									
NaNO3									
Miscellaneous	0.002 kg	0.001 kg	0.000 kg		0.812 kg	0.000 kg	0.000 kg	0.000 kg	0.809 kg
UO2(NO3)2	0.734 kg	0.440 kg	0.199 kg		237.684 kg	0.001 kg	0.000 kg	0.000 kg	236.511 kg
Pu	*0.127 Ci*	*0.048 Ci*	*0.072 Ci*		*24.373 Ci*	*0.000 Ci*	*0.000 Ci*	*0.000 Ci*	*24.198 Ci*
Am	*0.071 Ci*	*0.033 Ci*	*0.027 Ci*		*19.871 Ci*	*0.000 Ci*	*0.000 Ci*	*0.000 Ci*	*19.767 Ci*
Cs	*3.601 Ci*	*0.833 Ci*	*1.852 Ci*		*779.458 Ci*	*0.002 Ci*	*0.001 Ci*	*0.001 Ci*	*775.025 Ci*
Sr	*1.877 Ci*	*1.125 Ci*	*0.510 Ci*		*607.955 Ci*	*0.002 Ci*	*0.000 Ci*	*0.001 Ci*	*604.955 Ci*
PCB									
GAZ									
NO2									
NO									
PCB									
SOLIDS + RESINS									
Volume	*0.000 m3*	*0.002 m3*	*0.002 m3*		*0.000 m3*	*0.003 m3*	*0.002 m3*	*0.002 m3*	*0.000 m3*
Density	*5.425*	*1.378*	*5.386*		*4.737*	*4.675*	*5.386*	*1.378*	*5.448*
Total Mass Solids + Resins	**0.098 kg**	**2.764 kg**	**12.141 kg**		**0.899 kg**	**14.712 kg**	**12.104 kg**	**2.608 kg**	**0.645 kg**
Wt% solids	*0.02 wt%*	*5.57 wt%*	*4.17 wt%*	*0.00 wt%*	*0.02 wt%*	*17.16 wt%*	*17.16 wt%*	*17.16 wt%*	*0.02 wt%*
Al(NO3)3									
Al(OH)3									
Al2O3									
Fe(NO3)3									
FeOOH									
C									
CaO									
Na2C2O4									
CO2									
H2O									
SiO2									
Grout									
Miscellaneous	0.000 kg	0.000 kg	0.008 kg		0.000 kg	0.008 kg	0.008 kg	0.000 kg	0.000 kg
Zircaloy	0.077 kg	0.020 kg	9.548 kg		0.583 kg	9.538 kg	9.519 kg	0.019 kg	0.505 kg
Grafoil	0.021 kg	2.723 kg	2.573 kg		0.311 kg	5.134 kg	2.566 kg	2.568 kg	0.136 kg
HNO3									
H2C2O4									
Na2U2O7									
U	0.000 kg	0.022 kg	0.012 kg		0.005 kg	0.032 kg	0.011 kg	0.020 kg	0.004 kg
U3O7									
UH3									
UO2									
UO2(NO3)2									
UO4-4H2O									
Pu	*0.000 Ci*	*0.001 Ci*	*0.008 Ci*		*0.004 Ci*	*0.008 Ci*	*0.008 Ci*	*0.001 Ci*	*0.004 Ci*
Am	*0.000 Ci*	*0.007 Ci*	*0.001 Ci*		*0.001 Ci*	*0.007 Ci*	*0.001 Ci*	*0.006 Ci*	*0.001 Ci*
Cs	*0.013 Ci*	*0.729 Ci*	*0.707 Ci*		*0.171 Ci*	*1.393 Ci*	*0.705 Ci*	*0.688 Ci*	*0.117 Ci*
Sr	*0.002 Ci*	*0.091 Ci*	*0.049 Ci*		*0.022 Ci*	*0.135 Ci*	*0.049 Ci*	*0.086 Ci*	*0.015 Ci*
PCB									
RESINS									
Zeolite									
OIER									
Pu									
Am									
Cs									
TOTAL ACTIVITIES									
Total U	0.444 kg	0.287 kg	0.132 kg		143.581 kg	0.032 kg	0.012 kg	0.021 kg	142.871 kg
Total Pu	0.127 Ci	0.049 Ci	0.080 Ci		24.377 Ci	0.009 Ci	0.008 Ci	0.001 Ci	24.202 Ci
Total Am	0.071 Ci	0.040 Ci	0.028 Ci		19.873 Ci	0.007 Ci	0.001 Ci	0.007 Ci	19.768 Ci
TRU	**0.199 Ci**	**0.089 Ci**	**0.108 Ci**		**44.250 Ci**	**0.016 Ci**	**0.009 Ci**	**0.007 Ci**	**43.970 Ci**
Total Cs	3.615 Ci	1.562 Ci	2.559 Ci		779.630 Ci	1.396 Ci	0.707 Ci	0.689 Ci	775.142 Ci
Total Sr	1.878 Ci	1.216 Ci	0.559 Ci		607.977 Ci	0.136 Ci	0.049 Ci	0.087 Ci	604.970 Ci
Beta Gamma	**5.493 Ci**	**2.778 Ci**	**3.118 Ci**		**1 387.607 Ci**	**1.532 Ci**	**0.756 Ci**	**0.776 Ci**	**1 380.112 Ci**
CONCENTRATION									
PCB in liquid									
PCB in solids									
Solids	0.28 g/l	60.77 g/l	49.77 g/l		0.28 g/l	198.39 g/l	199.84 g/l	180.10 g/l	0.23 g/l
U	0.001 g/cm3	0.006 g/cm3	0.001 g/cm3		0.044 g/cm3	0.000 g/cm3	0.000 g/cm3	0.001 g/cm3	0.051 g/cm3
Pu total	**0.360 Ci/m3**	**1.072 Ci/m3**	**0.328 Ci/m3**		**7.509 Ci/m3**	**0.116 Ci/m3**	**0.126 Ci/m3**	**0.067 Ci/m3**	**8.591 Ci/m3**
238 Pu	0.072 Ci/m3	0.214 Ci/m3	0.066 Ci/m3		1.502 Ci/m3	0.023 Ci/m3	0.025 Ci/m3	0.013 Ci/m3	1.718 Ci/m3
239 Pu	0.144 Ci/m3	0.429 Ci/m3	0.131 Ci/m3		3.004 Ci/m3	0.046 Ci/m3	0.050 Ci/m3	0.027 Ci/m3	3.436 Ci/m3
240 Pu	0.144 Ci/m3	0.429 Ci/m3	0.131 Ci/m3		3.004 Ci/m3	0.046 Ci/m3	0.050 Ci/m3	0.027 Ci/m3	3.436 Ci/m3
Am	0.202 Ci/m3	0.874 Ci/m3	0.113 Ci/m3		6.121 Ci/m3	0.101 Ci/m3	0.016 Ci/m3	0.450 Ci/m3	7.017 Ci/m3
TRU	0.562 Ci/m3	1.946 Ci/m3	0.441 Ci/m3		13.630 Ci/m3	0.217 Ci/m3	0.142 Ci/m3	0.517 Ci/m3	15.607 Ci/m3
TRU	**506 nCi/g**	**1 784 nCi/g**	**369 nCi/g**		**11 486 nCi/g**	**188 nCi/g**	**122 nCi/g**	**493 nCi/g**	**12 944 nCi/g**
Beta Gamma	**15.523 Ci/m3**	**61.078 Ci/m3**	**12.781 Ci/m3**		**427.420 Ci/m3**	**20.658 Ci/m3**	**12.476 Ci/m3**	**53.605 Ci/m3**	**489.883 Ci/m3**

DETAILED STREAM DATA SHEET FOR ONE DAILY BATCH

STREAM KW2 Nominal Case : 1 Batch 160 kg solids	ST-408 TOTAL WATER USED FOR RESIN LEACHING AND WASHING	ST-409 TOTAL WATER FOR SOLIDS LEACHING AND WASHING	ST-410 SOLIDS FROM CENTRIFUGE	ST-501 TOTAL SOLUTION TO FILTRATION	ST-502 FILTER RINSING WATER	ST-503 TOTAL SOLUTION TO ADJUST	ST-504 RINSED FILTER TO CONDITIONING	ST-505 GROUT FORMERS FOR FILTER CONDITIONING	ST-506 CONDITIONED FILTERS
Volume	*0.028 m3*	*0.213 m3*	*0.051 m3*	*3.246 m3*	*0.033 m3*	*3.255 m3*	*0.001 m3*		*0.001 m3*
Density	*1.000*	*1.000*	*1.203*	*1.187*	*1.000*	*1.193*	*1.740*		*1.757*
Total Mass	28.296 kg	212.526 kg	60.944 kg	3,852.570 kg	32.536 kg	3,883.487 kg	1.619 kg		1.619 kg
Number of packages							0.059		0.059
LIQUID									
Volume	*0.028 m3*	*0.213 m3*	*0.048 m3*	*3.246 m3*	*0.033 m3*	*3.255 m3*	*0.001 m3*		*0.001 m3*
Density	*1.000*	*1.000*	*1.007*	*1.186*	*1.000*	*1.193*	*1.066*		*1.079*
Total Mass Liquid + Gaz	28.296 kg	212.526 kg	48.747 kg	3,851.671 kg	32.536 kg	3,883.398 kg	0.809 kg		0.809 kg
H2O	28.296 kg	212.526 kg	48.227 kg	2,610.525 kg	32.536 kg	2,642.356 kg	0.705 kg		0.705 kg
HNO3			0.413 kg	1,001.041 kg		1,000.957 kg	0.084 kg		0.084 kg
H2C2O4				0.460 kg		0.459 kg	0.000 kg		0.000 kg
HF				1.149 kg		1.149 kg	0.000 kg		0.000 kg
NaOH									
Al(NO3)3									
AlF3									
Fe(NO3)3									
CaO									
NaNO2									
NaNO3									
Miscellaneous			0.000 kg	0.812 kg		0.812 kg	0.000 kg		0.000 kg
UO2(NO3)2			0.106 kg	237.684 kg		237.664 kg	0.020 kg		0.020 kg
Pu			*0.011 Ci*	*24.373 Ci*		*24.371 Ci*	*0.002 Ci*		*0.002 Ci*
Am			*0.009 Ci*	*19.871 Ci*		*19.869 Ci*	*0.002 Ci*		*0.002 Ci*
Cs			*0.349 Ci*	*779.458 Ci*		*779.393 Ci*	*0.066 Ci*		*0.066 Ci*
Sr			*0.272 Ci*	*607.955 Ci*		*607.904 Ci*	*0.051 Ci*		*0.051 Ci*
PCB									
GAZ									
NO2									
NO									
PCB									
SOLIDS + RESINS									
Volume			*0.002 m3*	*0.000 m3*		*0.000 m3*	*0.000 m3*		*0.000 m3*
Density			*5.448*	*4.737*		*4.737*	*4.737*		*4.737*
Total Mass Solids + Resins			12.197 kg	0.899 kg		0.090 kg	0.809 kg		0.809 kg
Wt% solids	*0.00 wt%*	*0.00 wt%*	*20.01 wt%*	*0.02 wt%*	*0.00 wt%*	*0.00 wt%*	*50.00 wt%*	*0.00 wt%*	*50.00 wt%*
Al(NO3)3									
Al(OH)3									
Al2O3									
Fe(NO3)3									
FeOOH									
C									
CaO									
Na2C2O4									
CO2									
H2O									
SiO2									
Grout									
Miscellaneous			0.008 kg	0.000 kg		0.000 kg	0.000 kg		0.000 kg
Zircaloy			9.548 kg	0.583 kg		0.058 kg	0.525 kg		0.525 kg
Grafoil			2.573 kg	0.311 kg		0.031 kg	0.280 kg		0.280 kg
HNO3									
H2C2O4									
Na2U2O7									
U			0.068 kg	0.005 kg		0.001 kg	0.005 kg		0.005 kg
U3O7									
UH3									
UO2									
UO2(NO3)2									
UO4-4H2O									
Pu			*0.069 Ci*	*0.004 Ci*		*0.000 Ci*	*0.004 Ci*		*0.004 Ci*
Am			*0.019 Ci*	*0.001 Ci*		*0.000 Ci*	*0.001 Ci*		*0.001 Ci*
Cs			*2.210 Ci*	*0.171 Ci*		*0.017 Ci*	*0.154 Ci*		*0.154 Ci*
Sr			*0.287 Ci*	*0.022 Ci*		*0.002 Ci*	*0.020 Ci*		*0.020 Ci*
PCB									
RESINS									
Zeolite									
OIER									
Pu									
Am									
Cs									
TOTAL ACTIVITIES									
Total U			0.132 kg	143.581 kg		143.564 kg	0.017 kg		0.017 kg
Total Pu			0.080 Ci	24.377 Ci		24.371 Ci	0.006 Ci		0.006 Ci
Total Am			0.028 Ci	19.873 Ci		19.870 Ci	0.003 Ci		0.003 Ci
TRU			0.108 Ci	44.250 Ci		44.241 Ci	0.009 Ci		0.009 Ci
Total Cs			2.559 Ci	779.630 Ci		779.410 Ci	0.220 Ci		0.220 Ci
Total Sr			0.559 Ci	607.977 Ci		607.907 Ci	0.071 Ci		0.071 Ci
Beta Gamma			3.118 Ci	1 387.607 Ci		1 387.317 Ci	0.291 Ci		0.291 Ci
CONCENTRATION									
PCB in liquid									
PCB in solids									
Solids			240 72 g/l	0.28 g/l		0.03 g/l	869 95 g/l		878.52 g/l
U			0.003 g/cm3	0.044 g/cm3		0.044 g/cm3	0.018 g/cm3		0.018 g/cm3
Pu total			1.577 Ci/m3	7.509 Ci/m3		7.487 Ci/m3	6.144 Ci/m3		6.204 Ci/m3
238 Pu			0 315 Ci/m3	1.502 Ci/m3		1.497 Ci/m3	1.229 Ci/m3		1.241 Ci/m3
239 Pu			0.631 Ci/m3	3.004 Ci/m3		2.995 Ci/m3	2.457 Ci/m3		2.482 Ci/m3
240 Pu			0.631 Ci/m3	3.004 Ci/m3		2.995 Ci/m3	2.457 Ci/m3		2.482 Ci/m3
Am			0.546 Ci/m3	6.121 Ci/m3		6.104 Ci/m3	3.225 Ci/m3		3.257 Ci/m3
TRU			2.122 Ci/m3	13.630 Ci/m3		13.590 Ci/m3	9.369 Ci/m3		9.461 Ci/m3
TRU			1 765 nCi/g	11 486 nCi/g		11 392 nCi/g	5 385 nCi/g		5 385 nCi/g
Beta Gamma			61.531 Ci/m3	427.420 Ci/m3		426.169 Ci/m3	312.397 Ci/m3		315.475 Ci/m3

DETAILED STREAM DATA SHEET FOR ONE DAILY BATCH

STREAM KW2 Nominal Case : 1 Batch 160 kg solids	ST-601 SOLUTION BEFORE NEUTRALIZATION	ST-602 UO2(NO3)2 ADDITION SOLUTION	ST-603 FE(NO3)3 / AL(NO3)3 ADDITION SOLUTION	ST-604 FINAL SOLUTION SENT TO TWRS	ST-605 NANO2 ADDITION SOLUTION	ST-607 NAOH ADDITION SOLUTION	ST-608 WATER ADJUSTMENT	ST-701 RESINS + SOLID SOLUTION AFTER DECANTATION	ST-702 SUPERNATE TO ELIMINATE
Volume	*4.648 m3*	*0.020 m3*	*1.259 m3*	*10.498 m3*	*1.022 m3*	*1.463 m3*	*3.283 m3*		
Density	*1.201*	*1.323*	*1.328*	*1.163*	*1.251*	*1.403*	*1.000*		
Total Mass	5,582.130 kg	26.092 kg	1,672.551 kg	12,196.437 kg	1,278.750 kg	2,052.177 kg	3,283.380 kg		
Number of packages									
LIQUID									
Volume	*4.648 m3*	*0.020 m3*	*1.259 m3*	*10.336 m3*	*1.022 m3*	*1.463 m3*	*3.283 m3*		
Density	*1.201*	*1.323*	*1.328*	*1.139*	*1.251*	*1.403*	*1.000*	*1.000*	*1.000*
Total Mass Liquid + Gaz	5,582.040 kg	26.092 kg	1,672.551 kg	11,776.138 kg	1,278.750 kg	2,052.177 kg	3,283.380 kg		
H2O	3,724.709 kg	18.321 kg	1,064.032 kg	9,064.801 kg	767.250 kg	940.520 kg	3,283.380 kg		
HNO3	1,000.957 kg								
H2C2O4	0.459 kg								
HF	1.149 kg								
NaOH				98.700 kg		1,111.657 kg			
Al(NO3)3	5.000 kg		5.000 kg						
AlF3				1.609 kg					
Fe(NO3)3	603.519 kg		603.519 kg						
CaO									
NaNO2				511.500 kg	511.500 kg				
NaNO3				2,098.716 kg					
Miscellaneous	0.812 kg			0.812 kg					
UO2(NO3)2	245.434 kg	7.770 kg							
Pu	*24.371 Ci*								
Am	*19.869 Ci*								
Cs	*779.393 Ci*			*779.393 Ci*					
Sr	*607.904 Ci*								
PCB									
GAZ									
NO2									
NO									
PCB									
SOLIDS + RESINS									
Volume	*0.000 m3*			*0.152 m3*					
Density	*4.737*			*2.764*					
Total Mass Solids + Resins	0.090 kg			420.299 kg					
Wt% solids	*0.00 wt%*	*0.00 wt%*	*0.00 wt%*	*3.45 wt%*	*0.00 wt%*	*0.00 wt%*	*0.00 wt%*	*0.00 wt%*	*0.00 wt%*
Al(NO3)3									
Al(OH)3				0.337 kg					
Al2O3									
Fe(NO3)3									
FeOOH				221.719 kg					
C									
CaO									
Na2C2O4				0.684 kg					
CO2									
H2O									
SiO2									
Grout									
Miscellaneous	0.000 kg			0.000 kg					
Zircaloy	0.058 kg			0.058 kg					
Grafoil	0.031 kg			0.031 kg					
HNO3									
H2C2O4									
Na2U2O7				197.469 kg					
U	0.001 kg			0.001 kg					
U3O7									
UH3									
UO2									
UO2(NO3)2									
UO4-4H2O									
Pu	*0.000 Ci*			*24.371 Ci*					
Am	*0.000 Ci*			*19.870 Ci*					
Cs	*0.017 Ci*			*0.017 Ci*					
Sr	*0.002 Ci*			*607.907 Ci*					
PCB									
RESINS									
Zeolite									
OIER									
Pu									
Am									
Cs									
TOTAL ACTIVITIES									
Total U	148.258 kg	4.694 kg		148.258 kg					
Total Pu	24.371 Ci			24.371 Ci					
Total Am	19.870 Ci			19.870 Ci					
TRU	44.241 Ci			44.241 Ci					
Total Cs	779.410 Ci			779.410 Ci					
Total Sr	607.907 Ci			607.907 Ci					
Beta Gamma	1 387.317 Ci			1 387.317 Ci					
CONCENTRATION									
PCB in liquid									
PCB in solids									
Solids	0.02 g/l			40.07 g/l					
U	0.032 g/cm3	0.238 g/cm3		0.014 g/cm3					
Pu total	5.243 Ci/m3			2.324 Ci/m3					
238 Pu	1.049 Ci/m3			0.465 Ci/m3					
239 Pu	2.097 Ci/m3			0.929 Ci/m3					
240 Pu	2.097 Ci/m3			0.929 Ci/m3					
Am	4.274 Ci/m3			1.895 Ci/m3					
TRU	9.517 Ci/m3			4.218 Ci/m3					
TRU	7 925 nCi/g			3 627 nCi/g					
Beta Gamma	298.446 Ci/m3			132.277 Ci/m3					

DETAILED STREAM DATA SHEET FOR ONE DAILY BATCH

STREAM KW2 Nominal Case : 1 Batch 160 kg solids	ST-703 GROUT FORMERS	ST-704 FINAL GROUT WASTES TO ERDF	ST-801 ADDED WATER TO OFF-GAS TREATMENT
Volume			*0.135 m3*
Density			*1.000*
Total Mass			134.888 kg
Number of packages			
LIQUID			
Volume			*0.135 m3*
Density			*1.000*
Total Mass Liquid + Gaz			134.888 kg
H2O			134.888 kg
HNO3			
H2C2O4			
HF			
NaOH			
Al(NO3)3			
AlF3			
Fe(NO3)3			
CaO			
NaNO2			
NaNO3			
Miscellaneous			
UO2(NO3)2			
Pu			
Am			
Cs			
Sr			
PCB			
GAZ			
NO2			
NO			
PCB			
SOLIDS + RESINS			
Volume			
Density			
Total Mass Solids + Resins			
Wt% solids	*0.00 wt%*	*0.00 wt%*	*0.00 wt%*
Al(NO3)3			
Al(OH)3			
Al2O3			
Fe(NO3)3			
FeOOH			
C			
CaO			
Na2C2O4			
CO2			
H2O			
SiO2			
Grout			
Miscellaneous			
Zircaloy			
Grafoil			
HNO3			
H2C2O4			
Na2U2O7			
U			
U3O7			
UH3			
UO2			
UO2(NO3)2			
UO4-4H2O			
Pu			
Am			
Cs			
Sr			
PCB			
RESINS			
Zeolite			
OIER			
Pu			
Am			
Cs			
TOTAL ACTIVITIES			
Total U			
Total Pu			
Total Am			
TRU			
Total Cs			
Total Sr			
Beta Gamma			
CONCENTRATION			
PCB in liquid			
PCB in solids			
Solids			
U			
Pu total			
238 Pu			
239 Pu			
240 Pu			
Am			
TRU			
TRU			
Beta Gamma			

DETAILED STREAM DATA SHEET FOR THE WHOLE STREAM

STREAM KW2 Nominal Case - TOTAL STREAM	ST-101 SLUDGE AT INLET OF TREATMENT UNIT	ST-102 WATER ADDITION FOR SCREEN WASHING	ST-103 SLUDGE STREAM FROM RESIN SEPARATION	ST-104 RESIN STREAM FROM RESIN SEPARATION	ST-201 SLUDGE TO DISSOLVER	ST-202 RECYCLED NITRIC ACID	ST-203 HNO3 FOR DISSOLUTION	ST-204 DISSOLUTION OFF-GAS	ST-205 DISSOLUTION SOLUTION
Volume	*12.083 m3*	*0.124 m3*	*12.080 m3*	*0.135 m3*	*12.080 m3*	*1.845 m3*	*12.262 m3*	*248.001 m3*	*24.930 m3*
Density	*1.128*	*1.000*	*1.125*	*1.151*	*1.125*	*1.125*	*1.278*	*0.001*	*1.245*
Total Mass	13,625.144 kg	123.920 kg	13,594.164 kg	154.900 kg	13,594.164 kg	2,075.899 kg	15,670.390 kg	332.144 kg	31,037.833 kg
Number of packages									
LIQUID									
Volume	*11.990 m3*	*0.124 m3*	*11.990 m3*	*0.124 m3*	*11.990 m3*	*1.845 m3*	*12.262 m3*	*248.001 m3*	*24.906 m3*
Density	*1.000*	*1.000*	*1.000*	*1.000*	*1.000*	*1.125*	*1.278*	*0.001*	*1.241*
Total Mass Liquid + Gaz	11,990.126 kg	123.920 kg	11,990.126 kg	123.920 kg	11,990.126 kg	2,075.899 kg	15,670.390 kg	332.144 kg	30,905.974 kg
H2O	11,990.126 kg	123.920 kg	11,990.126 kg	123.920 kg	11,990.126 kg	1,378.397 kg	5,473.601 kg		19,052.462 kg
HNO3						697.502 kg	10,196.789 kg		9,421.787 kg
H2C2O4									
HF									
NaOH									
Al(NO3)3									
AlF3									
Fe(NO3)3									
CaO									
NaNO2									
NaNO3									
Miscellaneous									8.286 kg
UO2(NO3)2									2,423.420 kg
Pu									*247.949 Ci*
Am									*202.542 Ci*
Cs									*7,941.331 Ci*
Sr									*6,198.697 Ci*
PCB									
GAZ									
NO2									
NO								332.144 kg	
PCB									
SOLIDS + RESINS									
Volume	*0.093 m3*		*0.090 m3*	*0.011 m3*	*0.090 m3*				*0.024 m3*
Density	*17.516*		*17.798*	*2.922*	*17.798*				*5.448*
Total Mass Solids + Resins	1,635.017 kg		1,604.037 kg	30.980 kg	1,604.037 kg				131.859 kg
Wt% solids	*12.00 wt%*	*0.00 wt%*	*11.80 wt%*	*20.00 wt%*	*11.80 wt%*	*0.00 wt%*	*0.00 wt%*	*0.00 wt%*	*0.42 wt%*
Al(NO3)3									
Al(OH)3									
Al2O3									
Fe(NO3)3									
FeOOH									
C									
CaO									
Na2C2O4									
CO2									
H2O									
SiO2									
Grout									
Miscellaneous	8.386 kg		8.369 kg	0.017 kg	8.369 kg				0.084 kg
Zircaloy	103.428 kg		103.221 kg	0.207 kg	103.221 kg				103.221 kg
Grafoil	55.643 kg		27.821 kg	27.821 kg	27.821 kg				27.821 kg
HNO3									
H2C2O4									
Na2U2O7									
U	1,467.561 kg		1,464.625 kg	2.935 kg	1,464.625 kg				0.732 kg
U3O7									
UH3									
UO2									
UO2(NO3)2									
UO4-4H2O									
Pu	*249.193 Ci*		*248.695 Ci*	*0.498 Ci*	*248.695 Ci*				*0.746 Ci*
Am	*203.151 Ci*		*202.745 Ci*	*0.406 Ci*	*202.745 Ci*				*0.203 Ci*
Cs	*7,981.189 Ci*		*7,965.227 Ci*	*15.962 Ci*	*7,965.227 Ci*				*23.896 Ci*
Sr	*6,214.226 Ci*		*6,201.798 Ci*	*12.428 Ci*	*6,201.798 Ci*				*3.101 Ci*
PCB									
RESINS									
Zeolite									
OIER									
Pu									
Am									
Cs									
TOTAL ACTIVITIES									
Total U	1,467.561 kg		1,464.625 kg	2.935 kg	1,464.625 kg				1,464.625 kg
Total Pu	249.193 Ci		248.695 Ci	0.498 Ci	248.695 Ci				248.695 Ci
Total Am	203.151 Ci		202.745 Ci	0.406 Ci	202.745 Ci				202.745 Ci
TRU	452.344 Ci		451.439 Ci	0.905 Ci	451.439 Ci				451.439 Ci
Total Cs	7 981.189 Ci		7 965.227 Ci	15.962 Ci	7 965.227 Ci				7 965.227 Ci
Total Sr	6 214.226 Ci		6 201.798 Ci	12.428 Ci	6 201.798 Ci				6 201.798 Ci
Beta Gamma	14 195.416 Ci		14 167.025 Ci	28.391 Ci	14 167.025 Ci				14 167.025 Ci
CONCENTRATION									
PCB in liquid									
PCB in solids									
Solids	135.31 g/l		132.78 g/l	230.30 g/l	20.59 g/l				5.29 g/l
U	0.121 g/cm3		0.121 g/cm3	0.022 g/cm3	0.121 g/cm3				0.059 g/cm3
Pu total	20.623 Ci/m3		20.587 Ci/m3	3.705 Ci/m3	20.587 Ci/m3				9.976 Ci/m3
238 Pu	4.125 Ci/m3		4.117 Ci/m3	0.741 Ci/m3	4.117 Ci/m3				1.995 Ci/m3
239 Pu	8.249 Ci/m3		8.235 Ci/m3	1.482 Ci/m3	8.235 Ci/m3				3.990 Ci/m3
240 Pu	8.249 Ci/m3		8.235 Ci/m3	1.482 Ci/m3	8.235 Ci/m3				3.990 Ci/m3
Am	16.812 Ci/m3		16.783 Ci/m3	3.020 Ci/m3	16.783 Ci/m3				8.133 Ci/m3
TRU	37.435 Ci/m3		37.370 Ci/m3	6.725 Ci/m3	37.370 Ci/m3				18.108 Ci/m3
TRU	33 199 nCi/g		33 208 nCi/g	5 840 nCi/g	33 208 nCi/g				14 545 nCi/g
Beta Gamma	1,174.780 Ci/m3		1,172.743 Ci/m3	211.050 Ci/m3	1,172.743 Ci/m3				568.269 Ci/m3

DETAILED STREAM DATA SHEET FOR THE WHOLE STREAM

STREAM KW2 Nominal Case - TOTAL STREAM	ST-206	ST-301	ST-302	ST-303	ST-304	ST-305	ST-306	ST-307	ST-308
	DISSOLVER WASHING WATER	RESIN STREAM TO LEACHING	TOTAL REAGENTS FOR RESINS AND SOLIDS LEACHING	TOTAL OXALIC USED FOR RESIN LEACHING AND WASHING	TOTAL HF USED FOR SOLIDS LEACHING AND WASHING	TOTAL HNO3 USED FOR RESINS AND SOLIDS LEACHING	TOTAL HNO3 USED FOR RESIN LEACHING AND WASHING	TOTAL HNO3 USED FOR SOLIDS LEACHING AND WASHING	TOTAL CLARIFIED SOLUTION FROM RESIN LEACHING
Volume	*3.883 m3*	*0.135 m3*	*2.330 m3*	*0.235 m3*	*1.119 m3*	*0.976 m3*	*0.074 m3*	*0.902 m3*	*0.606 m3*
Density	*1.000*	*1.151*	*1.163*	*1.100*	*1.075*	*1.278*	*1.278*	*1.278*	*1.058*
Total Mass	3,883.166 kg	154.900 kg	2,708.716 kg	258.652 kg	1,202.666 kg	1,247.398 kg	94.026 kg	1,153.372 kg	640.891 kg
Number of packages									
LIQUID									
Volume	*3.883 m3*	*0.124 m3*	*2.330 m3*	*0.235 m3*	*1.119 m3*	*0.976 m3*	*0.074 m3*	*0.902 m3*	*0.606 m3*
Density	*1.000*	*1.000*	*1.163*	*1.100*	*1.075*	*1.278*	*1.278*	*1.278*	*1.057*
Total Mass Liquid + Gaz	3,883.166 kg	123.920 kg	2,708.716 kg	258.652 kg	1,202.666 kg	1,247.398 kg	94.026 kg	1,153.372 kg	639.291 kg
H2O	3,883.166 kg	123.920 kg	1,880.577 kg	253.952 kg	1,190.914 kg	435.711 kg	32.843 kg	402.868 kg	571.699 kg
HNO3			811.687 kg			811.687 kg	61.183 kg	750.504 kg	58.392 kg
H2C2O4			4.701 kg	4.701 kg					4.696 kg
HF			11.752 kg		11.752 kg				
NaOH									
Al(NO3)3									
AlF3									
Fe(NO3)3									
CaO									
NaNO2									
NaNO3									
Miscellaneous									0.015 kg
UO2(NO3)2									4.490 kg
Pu									*0.488 Ci*
Am									*0.336 Ci*
Cs									*8.499 Ci*
Sr									*11.484 Ci*
PCB									
GAZ									
NO2									
NO									
PCB									
SOLIDS + RESINS									
Volume		*0.011 m3*							*0.001 m3*
Density		*2.922*							*1.378*
Total Mass Solids + Resins		30.980 kg							1.600 kg
Wt% solids	*0.00 wt%*	*20.00 wt%*	*0.00 wt%*	*0.00 wt%*	*0.00 wt%*	*0.00 wt%*	*0.00 wt%*	*0.00 wt%*	*0.25 wt%*
Al(NO3)3									
Al(OH)3									
Al2O3									
Fe(NO3)3									
FeOOH									
C									
CaO									
Na2C2O4									
CO2									
H2O									
SiO2									
Grout									
Miscellaneous		0.017 kg							0.000 kg
Zircaloy		0.207 kg							0.012 kg
Grafoil		27.821 kg							1.576 kg
HNO3									
H2C2O4									
Na2U2O7									
U		2.935 kg							0.012 kg
U3O7									
UH3									
UO2									
UO2(NO3)2									
UO4-4H2O									
Pu		*0.498 Ci*							*0.001 Ci*
Am		*0.406 Ci*							*0.004 Ci*
Cs		*15.962 Ci*							*0.422 Ci*
Sr		*12.428 Ci*							*0.053 Ci*
PCB									
RESINS									
Zeolite									
OIER									
Pu									
Am									
Cs									
TOTAL ACTIVITIES									
Total U		2.935 kg							2.725 kg
Total Pu		0.498 Ci							0.488 Ci
Total Am		0.406 Ci							0.340 Ci
TRU		0.905 Ci							**0.828 Ci**
Total Cs		15.962 Ci							8.921 Ci
Total Sr		12.428 Ci							11.537 Ci
Beta Gamma		28.391 Ci							**20.459 Ci**
CONCENTRATION									
PCB in liquid									
PCB in solids									
Solids		230.30 g/l							2.64 g/l
U		0.022 g/cm3							0.004 g/cm3
Pu total		**3.705 Ci/m3**							**0.806 Ci/m3**
238 Pu		0.741 Ci/m3							0.161 Ci/m3
239 Pu		1.482 Ci/m3							0.322 Ci/m3
240 Pu		1.482 Ci/m3							0.322 Ci/m3
Am		3.020 Ci/m3							0.561 Ci/m3
TRU		6.725 Ci/m3							1.367 Ci/m3
TRU		**5 840 nCi/g**							**1 292 nCi/g**
Beta Gamma		211,050 Ci/m3							33.767 Ci/m3

DETAILED STREAM DATA SHEET FOR THE WHOLE STREAM

STREAM KW2 Nominal Case - TOTAL STREAM	ST-309 TOTAL SOLIDS LEACHING EFFLUENT	ST-310 LEACHED RESINS	ST-311 LEACHED SOLIDS	ST-401 TOTAL WATER USED FOR RESINS AND SOLIDS WASHING	ST-402 TOTAL SOLUTION FROM CENTRIFUGE	ST-403 RESINS + SOLID RESIDUES FROM LEACHING	ST-404 FINAL DECLOGGING (SOLIDS)	ST-405 FINAL DECLOGGING (RESIN)	ST-407 DISSOLUTION SOLUTION AFTER CENTRIFUGE
Volume	*3.616 m3*	*0.465 m3*	*2.493 m3*	*2.461 m3*	*33.175 m3*	*0.758 m3*	*0.619 m3*	*0.148 m3*	*28.789 m3*
Density	*1.111*	*1.091*	*1.195*	*1.000*	*1.187*	*1.156*	*1.164*	*1.049*	*1.206*
Total Mass	4,015.756 kg	507.017 kg	2,978.701 kg	2,460.932 kg	39,368.869 kg	875.997 kg	720.717 kg	155.280 kg	34,712.222 kg
Number of packages									
LIQUID									
Volume	*3.616 m3*	*0.444 m3*	*2.470 m3*	*2.461 m3*	*33.173 m3*	*0.726 m3*	*0.596 m3*	*0.129 m3*	*28.788 m3*
Density	*1.110*	*1.078*	*1.156*	*1.000*	*1.186*	*1.000*	*1.002*	*1.000*	*1.206*
Total Mass Liquid + Gaz	4,014.758 kg	478.767 kg	2,854.636 kg	2,460.932 kg	39,359.678 kg	725.655 kg	597.024 kg	128.630 kg	34,705.630 kg
H2O	3,220.717 kg	411.105 kg	2,086.691 kg	2,460.932 kg	26,676.582 kg	724.967 kg	596.407 kg	128.560 kg	22,884.167 kg
HNO3	774.779 kg	58.452 kg	754.152 kg		10,229.498 kg	0.667 kg	0.606 kg	0.060 kg	9,396.328 kg
H2C2O4		4.701 kg			4.696 kg	0.005 kg		0.005 kg	
HF	11.742 kg		11.752 kg		11.742 kg	0.009 kg	0.009 kg		
NaOH									
Al(NO3)3									
AlF3									
Fe(NO3)3									
CaO									
NaNO2									
NaNO3									
Miscellaneous	0.022 kg	0.015 kg	0.004 kg		8.301 kg	0.000 kg	0.000 kg	0.000 kg	8.263 kg
UO2(NO3)2	7.498 kg	4.495 kg	2.038 kg		2,428.859 kg	0.006 kg	0.002 kg	0.005 kg	2,416.871 kg
Pu	*1.297 Ci*	*0.488 Ci*	*0.739 Ci*		*249.063 Ci*	*0.001 Ci*	*0.001 Ci*	*0.001 Ci*	*247.279 Ci*
Am	*0.729 Ci*	*0.336 Ci*	*0.273 Ci*		*203.059 Ci*	*0.001 Ci*	*0.000 Ci*	*0.000 Ci*	*201.995 Ci*
Cs	*36.802 Ci*	*8.508 Ci*	*18.921 Ci*		*7,965.175 Ci*	*0.024 Ci*	*0.015 Ci*	*0.009 Ci*	*7,919.873 Ci*
Sr	*19.178 Ci*	*11.496 Ci*	*5.213 Ci*		*6,212.610 Ci*	*0.016 Ci*	*0.004 Ci*	*0.012 Ci*	*6,181.948 Ci*
PCB									
GAZ									
NO2									
NO									
PCB									
SOLIDS + RESINS									
Volume	*0.000 m3*	*0.021 m3*	*0.023 m3*		*0.002 m3*	*0.032 m3*	*0.023 m3*	*0.019 m3*	*0.001 m3*
Density	*5.425*	*1.378*	*5.386*		*4.737*	*4.675*	*5.386*	*1.378*	*5.448*
Total Mass Solids + Resins	0.998 kg	28.250 kg	124.065 kg		9.191 kg	150.343 kg	123.693 kg	26.650 kg	6.593 kg
Wt% solids	*0.02 wt%*	*5.57 wt%*	*4.17 wt%*	*0.00 wt%*	*0.02 wt%*	*17.16 wt%*	*17.16 wt%*	*17.16 wt%*	*0.02 wt%*
Al(NO3)3									
Al(OH)3									
Al2O3									
Fe(NO3)3									
FeOOH									
C									
CaO									
Na2C2O4									
CO2									
H2O									
SiO2									
Grout									
Miscellaneous	0.001 kg	0.002 kg	0.079 kg		0.005 kg	0.080 kg	0.079 kg	0.002 kg	0.004 kg
Zircaloy	0.783 kg	0.207 kg	97.570 kg		5.955 kg	97.473 kg	97.277 kg	0.195 kg	5.161 kg
Grafoil	0.211 kg	27.821 kg	26.298 kg		3.178 kg	52.465 kg	26.219 kg	26.246 kg	1.391 kg
HNO3									
H2C2O4									
Na2U2O7									
U	0.004 kg	0.220 kg	0.118 kg		0.053 kg	0.325 kg	0.117 kg	0.208 kg	0.037 kg
U3O7									
UH3									
UO2									
UO2(NO3)2									
UO4-4H2O									
Pu	*0.004 Ci*	*0.010 Ci*	*0.078 Ci*		*0.042 Ci*	*0.087 Ci*	*0.077 Ci*	*0.009 Ci*	*0.037 Ci*
Am	*0.001 Ci*	*0.070 Ci*	*0.010 Ci*		*0.015 Ci*	*0.076 Ci*	*0.010 Ci*	*0.066 Ci*	*0.010 Ci*
Cs	*0.135 Ci*	*7.454 Ci*	*7.228 Ci*		*1.752 Ci*	*14.239 Ci*	*7.206 Ci*	*7.032 Ci*	*1.195 Ci*
Sr	*0.016 Ci*	*0.932 Ci*	*0.498 Ci*		*0.224 Ci*	*1.376 Ci*	*0.497 Ci*	*0.879 Ci*	*0.155 Ci*
PCB									
RESINS									
Zeolite									
OIER									
Pu									
Am									
Cs									
TOTAL ACTIVITIES									
Total U	4.533 kg	2.935 kg	1.349 kg		1,467.232 kg	0.329 kg	0.118 kg	0.210 kg	1,459.974 kg
Total Pu	1.301 Ci	0.498 Ci	0.816 Ci		249.105 Ci	0.088 Ci	0.078 Ci	0.010 Ci	247.316 Ci
Total Am	0.730 Ci	0.406 Ci	0.282 Ci		203.074 Ci	0.076 Ci	0.010 Ci	0.067 Ci	202.005 Ci
TRU	2.031 Ci	0.905 Ci	1.099 Ci		452.180 Ci	0.164 Ci	0.088 Ci	0.077 Ci	449.321 Ci
Total Cs	36.937 Ci	15.962 Ci	26.149 Ci		7 966.927 Ci	14.263 Ci	7.222 Ci	7.041 Ci	7 921.068 Ci
Total Sr	19.194 Ci	12.428 Ci	5.711 Ci		6 212.834 Ci	1.392 Ci	0.501 Ci	0.891 Ci	6 182.103 Ci
Beta Gamma	56.132 Ci	28.391 Ci	31.860 Ci		14 179.761 Ci	15.655 Ci	7.722 Ci	7.932 Ci	14 103.171 Ci
CONCENTRATION									
PCB in liquid									
PCB in solids									
Solids	0.28 g/l	60.77 g/l	49.77 g/l		0.28 g/l	198.39 g/l	199.84 g/l	160.10 g/l	0.23 g/l
U	0.001 g/cm3	0.006 g/cm3	0.001 g/cm3		0.044 g/cm3	0.000 g/cm3	0.000 g/cm3	0.001 g/cm3	0.051 g/cm3
Pu total	0.360 Ci/m3	1.072 Ci/m3	0.328 Ci/m3		7.509 Ci/m3	0.116 Ci/m3	0.126 Ci/m3	0.067 Ci/m3	8.591 Ci/m3
238 Pu	0.072 Ci/m3	0.214 Ci/m3	0.066 Ci/m3		1.502 Ci/m3	0.023 Ci/m3	0.025 Ci/m3	0.013 Ci/m3	1.718 Ci/m3
239 Pu	0.144 Ci/m3	0.429 Ci/m3	0.131 Ci/m3		3.004 Ci/m3	0.046 Ci/m3	0.050 Ci/m3	0.027 Ci/m3	3.436 Ci/m3
240 Pu	0.144 Ci/m3	0.429 Ci/m3	0.131 Ci/m3		3.004 Ci/m3	0.046 Ci/m3	0.050 Ci/m3	0.027 Ci/m3	3.436 Ci/m3
Am	0.202 Ci/m3	0.874 Ci/m3	0.113 Ci/m3		6.121 Ci/m3	0.101 Ci/m3	0.016 Ci/m3	0.450 Ci/m3	7.017 Ci/m3
TRU	0.562 Ci/m3	1.946 Ci/m3	0.441 Ci/m3		13.630 Ci/m3	0.217 Ci/m3	0.142 Ci/m3	0.517 Ci/m3	15.607 Ci/m3
TRU	506 nCi/g	1 784 nCi/g	369 nCi/g		11 486 nCi/g	188 nCi/g	122 nCi/g	493 nCi/g	12 944 nCi/g
Beta Gamma	15.523 Ci/m3	61.078 Ci/m3	12.781 Ci/m3		427.420 Ci/m3	20.658 Ci/m3	12.476 Ci/m3	53.605 Ci/m3	489.883 Ci/m3

DETAILED STREAM DATA SHEET FOR THE WHOLE STREAM

STREAM KW2 Nominal Case - TOTAL STREAM	ST-408	ST-409	ST-410	ST-501	ST-502	ST-503	ST-504	ST-505	ST-506
	TOTAL WATER USED FOR RESIN LEACHING AND WASHING	TOTAL WATER FOR SOLIDS LEACHING AND WASHING	SOLIDS FROM CENTRIFUGE	TOTAL SOLUTION TO FILTRATION	FILTER RINSING WATER	TOTAL SOLUTION TO ADJUST	RINSED FILTER TO CONDITIONING	GROUT FORMERS FOR FILTER CONDITIONING	CONDITIONED FILTERS
Volume	*0.289 m3*	*2.172 m3*	*0.518 m3*	*33.175 m3*	*0.332 m3*	*33.266 m3*	*0.010 m3*		*0.009 m3*
Density	*1.000*	*1.000*	*1.203*	*1.187*	*1.000*	*1.193*	*1.740*		*1.757*
Total Mass	289.154 kg	2,171.777 kg	622.781 kg	39,368.869 kg	332.480 kg	39,684.806 kg	16.544 kg		16.544 kg
Number of packages							0.601		0.601
LIQUID									
Volume	*0.289 m3*	*2.172 m3*	*0.495 m3*	*33.173 m3*	*0.332 m3*	*33.265 m3*	*0.008 m3*		*0.008 m3*
Density	*1.000*	*1.000*	*1.007*	*1.186*	*1.000*	*1.193*	*1.066*		*1.079*
Total Mass Liquid + Gaz	289.154 kg	2,171.777 kg	498.142 kg	39,359.678 kg	332.480 kg	39,683.887 kg	8.272 kg		8.272 kg
H2O	289.154 kg	2,171.777 kg	492.826 kg	26,676.582 kg	332.480 kg	27,001.857 kg	7.206 kg		7.206 kg
HNO3			4.225 kg	10,229.498 kg		10,228.639 kg	0.860 kg		0.860 kg
H2C2O4				4.696 kg		4.695 kg	0.000 kg		0.000 kg
HF				11.742 kg		11.741 kg	0.001 kg		0.001 kg
NaOH									
Al(NO3)3									
AlF3									
Fe(NO3)3									
CaO									
NaNO2									
NaNO3									
Miscellaneous			0.004 kg	8.301 kg		8.300 kg	0.001 kg		0.001 kg
UO2(NO3)2			1.087 kg	2,428.859 kg		2,428.655 kg	0.204 kg		0.204 kg
Pu			*0.111 Ci*	*249.063 Ci*		*249.043 Ci*	*0.021 Ci*		*0.021 Ci*
Am			*0.091 Ci*	*203.059 Ci*		*203.042 Ci*	*0.017 Ci*		*0.017 Ci*
Cs			*3.561 Ci*	*7,965.175 Ci*		*7,964.505 Ci*	*0.670 Ci*		*0.670 Ci*
Sr			*2.780 Ci*	*6,212.610 Ci*		*6,212.088 Ci*	*0.522 Ci*		*0.522 Ci*
PCB									
GAZ									
NO2									
NO									
PCB									
SOLIDS + RESINS									
Volume			***0.023 m3***	***0.002 m3***		***0.000 m3***	***0.002 m3***		***0.002 m3***
Density			***5.448***	***4.737***		***4.737***	***4.737***		***4.737***
Total Mass Solids + Resins			**124.639 kg**	**9.191 kg**		**0.919 kg**	**8.272 kg**		**8.272 kg**
Wt% solids	*0.00 wt%*	*0.00 wt%*	*20.01 wt%*	*0.02 wt%*	*0.00 wt%*	*0.00 wt%*	*50.00 wt%*	*0.00 wt%*	*50.00 wt%*
Al(NO3)3									
Al(OH)3									
Al2O3									
Fe(NO3)3									
FeOOH									
C									
CaO									
Na2C2O4									
CO2									
H2O									
SiO2									
Grout									
Miscellaneous			0.079 kg	0.005 kg		0.000 kg	0.004 kg		0.004 kg
Zircaloy			97.570 kg	5.955 kg		0.596 kg	5.360 kg		5.360 kg
Grafoil			26.298 kg	3.178 kg		0.318 kg	2.860 kg		2.860 kg
HNO3									
H2C2O4									
Na2U2O7									
U			0.692 kg	0.053 kg		0.005 kg	0.048 kg		0.048 kg
U3O7									
UH3									
UO2									
UO2(NO3)2									
UO4-4H2O									
Pu			*0.705 Ci*	*0.042 Ci*		*0.004 Ci*	*0.037 Ci*		*0.037 Ci*
Am			*0.192 Ci*	*0.015 Ci*		*0.002 Ci*	*0.014 Ci*		*0.014 Ci*
Cs			*22.587 Ci*	*1.752 Ci*		*0.175 Ci*	*1.577 Ci*		*1.577 Ci*
Sr			*2.931 Ci*	*0.224 Ci*		*0.022 Ci*	*0.202 Ci*		*0.202 Ci*
PCB									
RESINS									
Zeolite									
OIER									
Pu									
Am									
Cs									
TOTAL ACTIVITIES									
Total U			1.349 kg	1,467.232 kg		1,467.061 kg	0.171 kg		0.171 kg
Total Pu			0.816 Ci	249.105 Ci		249.047 Ci	0.058 Ci		0.058 Ci
Total Am			0.282 Ci	203.074 Ci		203.044 Ci	0.031 Ci		0.031 Ci
TRU			1.099 Ci	452.180 Ci		452.091 Ci	0.089 Ci		0.089 Ci
Total Cs			26.149 Ci	7 966.927 Ci		7 964.680 Ci	2.247 Ci		2.247 Ci
Total Sr			5.711 Ci	6 212.834 Ci		6 212.110 Ci	0.724 Ci		0.724 Ci
Beta Gamma			31.860 Ci	14 179.761 Ci		14 176.791 Ci	2.970 Ci		2.970 Ci
CONCENTRATION									
PCB in liquid									
PCB in solids									
Solids			240.72 g/l	0.28 g/l		0.03 g/l	869.95 g/l		878.52 g/l
U			0.003 g/cm3	0.044 g/cm3		0.044 g/cm3	0.018 g/cm3		0.018 g/cm3
Pu total			**1.577 Ci/m3**	**7.509 Ci/m3**		**7.487 Ci/m3**	**6.144 Ci/m3**		**6.204 Ci/m3**
238 Pu			0.315 Ci/m3	1.502 Ci/m3		1.497 Ci/m3	1.229 Ci/m3		1.241 Ci/m3
239 Pu			0.631 Ci/m3	3.004 Ci/m3		2.995 Ci/m3	2.457 Ci/m3		2.482 Ci/m3
240 Pu			0.631 Ci/m3	3.004 Ci/m3		2.995 Ci/m3	2.457 Ci/m3		2.482 Ci/m3
Am			0.546 Ci/m3	6.121 Ci/m3		6.104 Ci/m3	3.225 Ci/m3		3.257 Ci/m3
TRU			2.122 Ci/m3	13.630 Ci/m3		13.590 Ci/m3	9.369 Ci/m3		9.461 Ci/m3
TRU			**1 765 nCi/g**	**11 486 nCi/g**		**11 392 nCi/g**	**5 385 nCi/g**		**5 385 nCi/g**
Beta Gamma			61.531 Ci/m3	427.420 Ci/m3		426.169 Ci/m3	312.397 Ci/m3		315.475 Ci/m3

DETAILED STREAM DATA SHEET FOR THE WHOLE STREAM

STREAM KW2 Nominal Case - TOTAL STREAM	ST-601 SOLUTION BEFORE NEUTRALIZATION	ST-602 UO2(NO3)2 ADDITION SOLUTION	ST-603 FE(NO3)3 / AL(NO3)3 ADDITION SOLUTION	ST-604 FINAL SOLUTION SENT TO TWRS	ST-605 NANO2 ADDITION SOLUTION	ST-607 NAOH ADDITION SOLUTION	ST-608 WATER ADJUSTMENT	ST-701 RESINS + SOLID SOLUTION AFTER DECANTATION	ST-702 SUPERNATE TO ELIMINATE
Volume	*47.502 m3*	*0.202 m3*	*12.870 m3*	*107.175 m3*	*10.444 m3*	*14.947 m3*	*33.552 m3*		
Density	*1.201*	*1.323*	*1.328*	*1.163*	*1.251*	*1.403*	*1.000*		
Total Mass	57,042.993 kg	266.628 kg	17,091.560 kg	124,633.653 kg	13,067.364 kg	20,970.900 kg	33,552.396 kg		
Number of packages									
LIQUID									
Volume	*47.502 m3*	*0.202 m3*	*12.870 m3*	*105.621 m3*	*10.444 m3*	*14.947 m3*	*33.552 m3*		
Density	*1.201*	*1.323*	*1.328*	*1.139*	*1.251*	*1.403*	*1.000*	*1.000*	*1.000*
Total Mass Liquid + Gaz	57,042.074 kg	266.628 kg	17,091.560 kg	120,338.678 kg	13,067.364 kg	20,970.900 kg	33,552.396 kg		
H2O	38,062.269 kg	187.224 kg	10,873.188 kg	92,631.916 kg	7,840.419 kg	9,611.040 kg	33,552.396 kg		
HNO3	10,228.639 kg								
H2C2O4	4.695 kg								
HF	11.741 kg								
NaOH				1,008.601 kg		11,359.860 kg			
Al(NO3)3	51.094 kg		51.094 kg						
AlF3				16.438 kg					
Fe(NO3)3	6,167.277 kg		6,167.277 kg						
CaO									
NaNO2				5,226.946 kg	5,226.946 kg				
NaNO3				21,446.478 kg					
Miscellaneous	8.300 kg			8.300 kg					
UO2(NO3)2	2,508.059 kg	79.404 kg							
Pu	*249.043 Ci*								
Am	*203.042 Ci*								
Cs	*7,964.505 Ci*			*7,964.505 Ci*					
Sr	*6,212.088 Ci*								
PCB									
GAZ									
NO2									
NO									
PCB									
SOLIDS + RESINS									
Volume	*0.000 m3*			*1.554 m3*					
Density	*4.737*			*2.764*					
Total Mass Solids + Resins	0.919 kg			4,294.975 kg					
Wt% solids	*0.00 wt%*	*0.00 wt%*	*0.00 wt%*	*3.45 wt%*	*0.00 wt%*	*0.00 wt%*	*0.00 wt%*	*0.00 wt%*	*0.00 wt%*
Al(NO3)3									
Al(OH)3				3.447 kg					
Al2O3									
Fe(NO3)3									
FeOOH				2,265.712 kg					
C									
CaO									
Na2C2O4				6.991 kg					
CO2									
H2O									
SiO2									
Grout									
Miscellaneous	0.000 kg			0.000 kg					
Zircaloy	0.596 kg			0.596 kg					
Grafoil	0.318 kg			0.318 kg					
HNO3									
H2C2O4									
Na2U2O7				2,017.905 kg					
U	0.005 kg			0.005 kg					
U3O7									
UH3									
UO2									
UO2(NO3)2									
UO4-4H2O									
Pu	*0.004 Ci*			*249.047 Ci*					
Am	*0.002 Ci*			*203.044 Ci*					
Cs	*0.175 Ci*			*0.175 Ci*					
Sr	*0.022 Ci*			*6,212.110 Ci*					
PCB									
RESINS									
Zeolite									
OIER									
Pu									
Am									
Cs									
TOTAL ACTIVITIES									
Total U	1,515.026 kg	47.965 kg		1,515.026 kg					
Total Pu	249.047 Ci			249.047 Ci					
Total Am	203.044 Ci			203.044 Ci					
TRU	452.091 Ci			452.091 Ci					
Total Cs	7 964.680 Ci			7 964.680 Ci					
Total Sr	6 212.110 Ci			6 212.110 Ci					
Beta Gamma	14 176.791 Ci			14 176.791 Ci					
CONCENTRATION									
PCB in liquid									
PCB in solids									
Solids	0.02 g/l			40.07 g/l					
U	0.032 g/cm3	0.238 g/cm3		0.014 g/cm3					
Pu total	5.243 Ci/m3			2.324 Ci/m3					
238 Pu	1.049 Ci/m3			0.465 Ci/m3					
239 Pu	2.097 Ci/m3			0.929 Ci/m3					
240 Pu	2.097 Ci/m3			0.929 Ci/m3					
Am	4.274 Ci/m3			1.895 Ci/m3					
TRU	9.517 Ci/m3			4.218 Ci/m3					
TRU	7 925 nCi/g			3 627 nCi/g					
Beta Gamma	298.446 Ci/m3			132.277 Ci/m3					

DETAILED STREAM DATA SHEET FOR THE WHOLE STREAM

STREAM KW2 Nominal Case - TOTAL STREAM	ST-703 GROUT FORMERS	ST-704 FINAL GROUT WASTES TO ERDF	ST-801 ADDED WATER TO OFF-GAS TREATMENT
Volume			*1.378 m3*
Density			*1.000*
Total Mass			1,378.397 kg
Number of packages			
LIQUID			
Volume			*1.378 m3*
Density			*1.000*
Total Mass Liquid + Gaz			1,378.397 kg
H2O			1,378.397 kg
HNO3			
H2C2O4			
HF			
NaOH			
Al(NO3)3			
AlF3			
Fe(NO3)3			
CaO			
NaNO2			
NaNO3			
Miscellaneous			
UO2(NO3)2			
Pu			
Am			
Cs			
Sr			
PCB			
GAZ			
NO2			
NO			
PCB			
SOLIDS + RESINS			
Volume			
Density			
Total Mass Solids + Resins			
Wt% solids	*0.00 wt%*	*0.00 wt%*	*0.00 wt%*
Al(NO3)3			
Al(OH)3			
Al2O3			
Fe(NO3)3			
FeOOH			
C			
CaO			
Na2C2O4			
CO2			
H2O			
SiO2			
Grout			
Miscellaneous			
Zircaloy			
Grafoil			
HNO3			
H2C2O4			
Na2U2O7			
U			
U3O7			
UH3			
UO2			
UO2(NO3)2			
UO4-4H2O			
Pu			
Am			
Cs			
Sr			
PCB			
RESINS			
Zeolite			
OIER			
Pu			
Am			
Cs			
TOTAL ACTIVITIES			
Total U			
Total Pu			
Total Am			
TRU			
Total Cs			
Total Sr			
Beta Gamma			
CONCENTRATION			
PCB in liquid			
PCB in solids			
Solids			
U			
Pu total			
238 Pu			
239 Pu			
240 Pu			
Am			
TRU			
TRU			
Beta Gamma			

APPENDIX E

KW3 STREAM

This page intentionally left blank.

SLUDGE TREATMENT
CHEMICAL FLOW SHEET

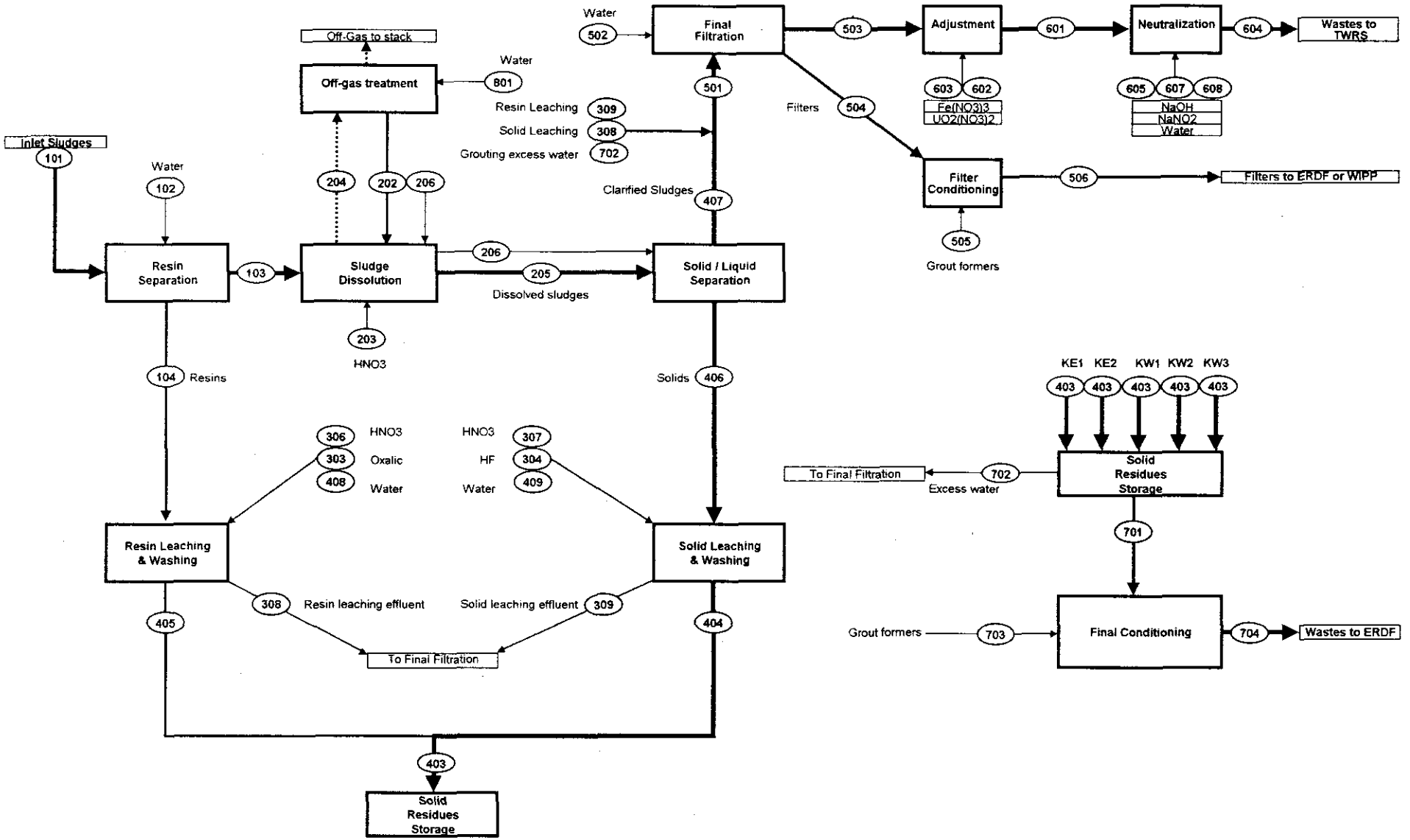

SLUDGE TREATMENT
MATERIAL BALANCE

STREAM KW3 ;
Nominal Case : □1 Batch 160 kg solids
 # OF BATCHES : 22.4

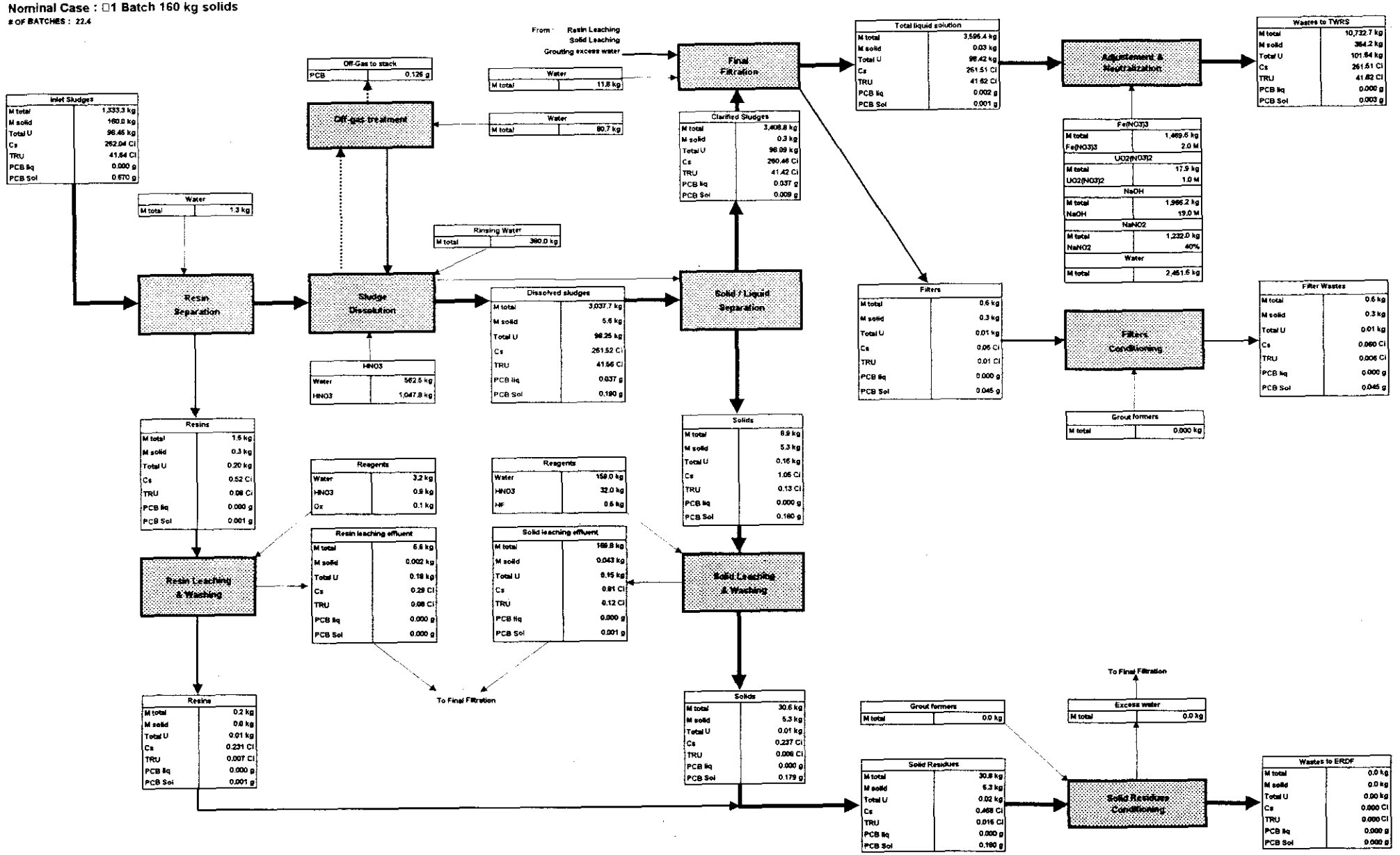

SLUDGE TREATMENT
CONCENTRATION

STREAM KW3
Nominal Case : □1 Batch 160 kg solids

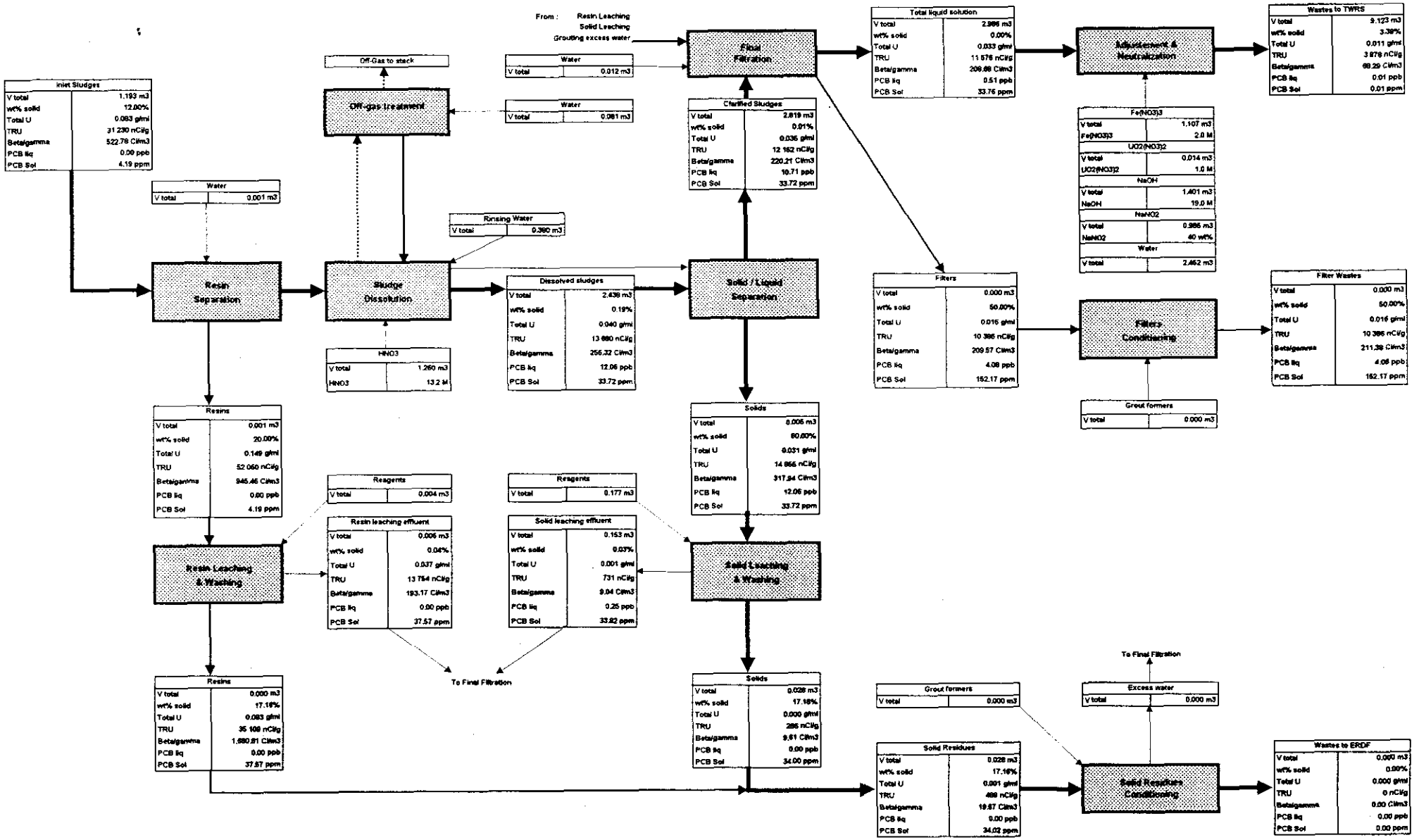

Requirements

STREAM KW3	Requirements		Obtained results
Effluent sent to TWRS	**TWRS Requirements**		
PCB in liq	< 0.5 ppb		0.01 ppb
PCB in sol	< 2 ppm		0.008 ppm
Concentration	< 40 g/l		39.92 g/l
Na(NO3) concentration			2.61 M
NaOH Concentration	Req on [OH-] : 0.26 M		0.26 M
NaOH + Na(NO2) Concentration	Req on [OH-]+[NO2-] : 1.04 M		1.04 M
Na(NO2) concentration	Req on [NO2-] : none		0.78 M
Volume generated m3			**205 m3**
Filters : Grouted sent to ERDF or sent as-is to WIPP	**ERDF Requirements**	**WIPP Requirements**	
PCB (ppm)		< 2 ppm	152.172 ppm
U g/ml	< 0.026 g/ml		0.0162 g/ml
Pu(Total)	Ci/m3		10.732 Ci/m3
238 Pu	< 1.5 Ci/m3		2.146 Ci/m3
239 Pu	< 0.029 Ci/m3		4.293 Ci/m3
240 Pu	< 0.029 Ci/m3		4.293 Ci/m3
Am	< 0.05 Ci/m3		4.615 Ci/m3
TRU	< 100 nanoCi/g	> 100 nanoCi/g	10 386 nCi/g
Volume generated m3			0.1 m3
Number of 0.2 m3 drums			**0.6**

DETAILED STREAM DATA SHEET FOR ONE DAILY BATCH

STREAM KW3 Nominal Case : 1 Batch 160 kg solids	ST-101 SLUDGE AT INLET OF TREATMENT UNIT	ST-102 WATER ADDITION FOR SCREEN WASHING	ST-103 SLUDGE STREAM FROM RESIN SEPARATION	ST-104 RESIN STREAM FROM RESIN SEPARATION	ST-201 SLUDGE TO DISSOLVER	ST-202 RECYCLED NITRIC ACID	ST-203 HNO3 FOR DISSOLUTION	ST-204 DISSOLUTION OFF-GAS	ST-205 DISSOLUTION SOLUTION
Volume	*1.193 m3*	*0.001 m3*	*1.193 m3*	*0.001 m3*	*1.193 m3*	*0.108 m3*	*1.260 m3*	*14.175 m3*	*2.438 m3*
Density	*1.118*	*1.000*	*1.117*	*1.213*	*1.117*	*1.125*	*1.278*	*0.002*	*1.246*
Total Mass	**1,333.333 kg**	**1.280 kg**	**1,333.013 kg**	**1.600 kg**	**1,333.013 kg**	**121.591 kg**	**1,610.284 kg**	**27.496 kg**	**3,037.718 kg**
Number of packages									
LIQUID									
Volume	*1.173 m3*	*0.001 m3*	*1.173 m3*	*0.001 m3*	*1.173 m3*	*0.108 m3*	*1.260 m3*	*14.175 m3*	*2.435 m3*
Density	*1.000*	*1.000*	*1.000*	*1.000*	*1.000*	*1.125*	*1.278*	*0.002*	*1.245*
Total Mass Liquid + Gaz	**1,173.333 kg**	**1.280 kg**	**1,173.333 kg**	**1.280 kg**	**1,173.333 kg**	**121.591 kg**	**1,610.284 kg**	**27.496 kg**	**3,032.093 kg**
H2O	1,173.333 kg	1.280 kg	1,173.333 kg	1.280 kg	1,173.333 kg	80.737 kg	562.466 kg		1,849.028 kg
HNO3						40.855 kg	1,047.819 kg		921.000 kg
H2C2O4									
HF									
NaOH									
Al(NO3)3									48.792 kg
AlF3									
Fe(NO3)3									40.353 kg
CaO									0.074 kg
NaNO2									
NaNO3									
Miscellaneous									10.275 kg
UO2(NO3)2									162.571 kg
Pu									*23.145 Ci*
Am									*18.324 Ci*
Cs									*260.731 Ci*
Sr									*360.717 Ci*
PCB									*0.037 g*
GAZ									
NO2								23.120 kg	
NO								4.376 kg	
PCB								*0.126 g*	
SOLIDS + RESINS									
Volume	*0.020 m3*		*0.020 m3*	*0.000 m3*	*0.020 m3*				*0.002 m3*
Density	*8.148*		*8.148*	*8.148*	*8.148*				*2.305*
Total Mass Solids + Resins	**160.000 kg**		**159.680 kg**	**0.320 kg**	**159.680 kg**				**5.625 kg**
Wt% solids	*12.00 wt%*	*0.00 wt%*	*11.98 wt%*	*20.00 wt%*	*11.98 wt%*	*0.00 wt%*	*0.00 wt%*	*0.00 wt%*	*0.19 wt%*
Al(NO3)3									
Al(OH)3	18.084 kg		18.048 kg	0.036 kg	18.048 kg				0.180 kg
Al2O3									
Fe(NO3)3									
FeOOH	15.005 kg		14.975 kg	0.030 kg	14.975 kg				0.150 kg
C	0.132 kg		0.131 kg	0.000 kg	0.131 kg				0.131 kg
CaO	0.083 kg		0.082 kg	0.000 kg	0.082 kg				0.008 kg
Na2C2O4									
CO2	0.130 kg		0.130 kg	0.000 kg	0.130 kg				
H2O									
SiO2	5.006 kg		4.996 kg	0.010 kg	4.996 kg				4.996 kg
Grout									
Miscellaneous	10.400 kg		10.379 kg	0.021 kg	10.379 kg				0.104 kg
Zircaloy									
Grafoil									
HNO3									
H2C2O4									
Na2U2O7									
U	2.966 kg		2.960 kg	0.006 kg	2.960 kg				0.001 kg
U3O7	30.878 kg		30.816 kg	0.062 kg	30.816 kg				0.015 kg
UH3	6.943 kg		6.929 kg	0.014 kg	6.929 kg				0.003 kg
UO2	69.974 kg		69.834 kg	0.140 kg	69.834 kg				0.035 kg
UO2(NO3)2									
UO4-4H2O	0.401 kg		0.400 kg	0.001 kg	0.400 kg				0.000 kg
Pu	*23.261 Ci*		*23.214 Ci*	*0.047 Ci*	*23.214 Ci*				*0.070 Ci*
Am	*18.379 Ci*		*18.342 Ci*	*0.037 Ci*	*18.342 Ci*				*0.018 Ci*
Cs	*262.040 Ci*		*261.516 Ci*	*0.524 Ci*	*261.516 Ci*				*0.785 Ci*
Sr	*361.621 Ci*		*360.898 Ci*	*0.723 Ci*	*360.898 Ci*				*0.180 Ci*
PCB	*0.670 g*		*0.669 g*	*0.001 g*	*0.669 g*				*0.190 g*
RESINS									
Zeolite									
OIER									
Pu									
Am									
Cs									
TOTAL ACTIVITIES									
Total U	98.449 kg		98.252 kg	0.197 kg	98.252 kg				98.252 kg
Total Pu	23.261 Ci		23.214 Ci	0.047 Ci	23.214 Ci				23.214 Ci
Total Am	18.379 Ci		18.342 Ci	0.037 Ci	18.342 Ci				18.342 Ci
TRU	**41.640 Ci**		**41.557 Ci**	**0.083 Ci**	**41.557 Ci**				**41.557 Ci**
Total Cs	262.040 Ci		261.516 Ci	0.524 Ci	261.516 Ci				261.516 Ci
Total Sr	361.621 Ci		360.898 Ci	0.723 Ci	360.898 Ci				360.898 Ci
Beta Gamma	**623.661 Ci**		**622.413 Ci**	**1.247 Ci**	**622.413 Ci**				**622.413 Ci**
CONCENTRATION									
PCB in liquid									12.06 ppb
PCB in solids	4.189 ppm		4.189 ppm	4.189 ppm	4.189 ppm				33.721 ppm
Solids	134.12 g/l		133.86 g/l	242.56 g/l	19.46 g/l				2.31 g/l
U	0.083 g/cm3		0.082 g/cm3	0.149 g/cm3	0.082 g/cm3				0.040 g/cm3
Pu total	**19.498 Ci/m3**		**19.460 Ci/m3**	**35.263 Ci/m3**	**19.460 Ci/m3**				**9.523 Ci/m3**
238 Pu	3.900 Ci/m3		3.892 Ci/m3	7.053 Ci/m3	3.892 Ci/m3				1.905 Ci/m3
239 Pu	7.799 Ci/m3		7.784 Ci/m3	14.105 Ci/m3	7.784 Ci/m3				3.809 Ci/m3
240 Pu	7.799 Ci/m3		7.784 Ci/m3	14.105 Ci/m3	7.784 Ci/m3				3.809 Ci/m3
Am	15.406 Ci/m3		15.376 Ci/m3	27.863 Ci/m3	15.376 Ci/m3				7.524 Ci/m3
TRU	34.904 Ci/m3		34.836 Ci/m3	63.126 Ci/m3	34.836 Ci/m3				17.047 Ci/m3
TRU	**31 230 nCi/g**		**31 175 nCi/g**	**52 050 nCi/g**	**31 175 nCi/g**				**13 680 nCi/g**
Beta Gamma	**522.780 Ci/m3**		**521.752 Ci/m3**	**945.462 Ci/m3**	**521.752 Ci/m3**				**255.325 Ci/m3**

DETAILED STREAM DATA SHEET FOR ONE DAILY BATCH

STREAM KW3 Nominal Case : 1 Batch 160 kg solids	ST-298	ST-301	ST-302	ST-303	ST-304	ST-305	ST-306	ST-307	ST-308
	DISSOLVER WASHING WATER	RESIN STREAM TO LEACHING	TOTAL REAGENTS FOR RESINS AND SOLIDS LEACHING	TOTAL OXALIC USED FOR RESIN LEACHING AND WASHING	TOTAL HF USED FOR SOLIDS LEACHING AND WASHING	TOTAL HNO3 USED FOR RESINS AND SOLIDS LEACHING	TOTAL HNO3 USED FOR RESIN LEACHING AND WASHING	TOTAL HNO3 USED FOR SOLIDS LEACHING AND WASHING	TOTAL CLARIFIED SOLUTION FROM RESIN LEACHING
Volume	*0.380 m3*	*0.001 m3*	*0.088 m3*	*0.002 m3*	*0.046 m3*	*0.040 m3*	*0.001 m3*	*0.038 m3*	*0.005 m3*
Density	*1.000*	*1.213*	*1.167*	*1.100*	*1.075*	*1.278*	*1.278*	*1.278*	*1.112*
Total Mass	380.000 kg	1.600 kg	102.937 kg	2.432 kg	49.913 kg	50.592 kg	1.404 kg	49.188 kg	5.555 kg
Number of packages									
LIQUID									
Volume	*0.380 m3*	*0.001 m3*	*0.088 m3*	*0.002 m3*	*0.046 m3*	*0.040 m3*	*0.001 m3*	*0.038 m3*	*0.005 m3*
Density	*1.000*	*1.000*	*1.167*	*1.100*	*1.075*	*1.278*	*1.278*	*1.278*	*1.111*
Total Mass Liquid + Gaz	380.000 kg	1.280 kg	102.937 kg	2.432 kg	49.913 kg	50.592 kg	1.404 kg	49.188 kg	5.553 kg
H2O	380.000 kg	1.280 kg	69.446 kg	2.382 kg	49.393 kg	17.672 kg	0.490 kg	17.181 kg	4.415 kg
HNO3			32.920 kg			32.920 kg	0.914 kg	32.007 kg	0.605 kg
H2C2O4			0.050 kg	0.050 kg					0.050 kg
HF			0.520 kg		0.520 kg				
NaOH									
Al(NO3)3									0.089 kg
AlF3									
Fe(NO3)3									0.074 kg
CaO									0.000 kg
NaNO2									
NaNO3									
Miscellaneous									0.019 kg
UO2(NO3)2									0.301 kg
Pu									*0.046 Ci*
Am									*0.030 Ci*
Cs									*0.279 Ci*
Sr									*0.669 Ci*
PCB									
GAZ									
NO2									
NO									
PCB									
SOLIDS + RESINS									
Volume		*0.000 m3*							*0.000 m3*
Density		*8.148*							*6.220*
Total Mass Solids + Resins		0.320 kg							0.002 kg
Wt% solids	*0.00 wt%*	*20.00 wt%*	*0.00 wt%*	*0.00 wt%*	*0.00 wt%*	*0.00 wt%*	*0.00 wt%*	*0.00 wt%*	*0.04 wt%*
Al(NO3)3									
Al(OH)3		0.036 kg							0.000 kg
Al2O3									
Fe(NO3)3									
FeOOH		0.030 kg							0.000 kg
C		0.000 kg							0.000 kg
CaO		0.000 kg							0.000 kg
Na2C2O4									
CO2		0.000 kg							
H2O									
SiO2		0.010 kg							0.001 kg
Grout									
Miscellaneous		0.021 kg							0.000 kg
Zircaloy									
Grafoil									
HNO3									
H2C2O4									
Na2U2O7									
U		0.006 kg							0.000 kg
U3O7		0.062 kg							0.000 kg
UH3		0.014 kg							0.000 kg
UO2		0.140 kg							0.001 kg
UO2(NO3)2									
UO4-4H2O		0.001 kg							0.000 kg
Pu		*0.047 Ci*							*0.000 Ci*
Am		*0.037 Ci*							*0.000 Ci*
Cs		*0.524 Ci*							*0.014 Ci*
Sr		*0.723 Ci*							*0.003 Ci*
PCB		*0.001 g*							*0.000 g*
RESINS									
Zeolite									
OIER									
Pu									
Am									
Cs									
TOTAL ACTIVITIES									
Total U		0.197 kg							0.183 kg
Total Pu		0.047 Ci							0.046 Ci
Total Am		0.037 Ci							0.031 Ci
TRU		**0.083 Ci**							**0.076 Ci**
Total Cs		0.524 Ci							0.293 Ci
Total Sr		0.723 Ci							0.672 Ci
Beta Gamma		**1.247 Ci**							**0.965 Ci**
CONCENTRATION									
PCB in liquid									
PCB in solids		4.189 ppm							37.566 ppm
Solids		242.56 g/l							0.40 g/l
U		0.149 g/cm3							0.037 g/cm3
Pu total		**35.263 Ci/m3**							**9.134 Ci/m3**
238 Pu		7.053 Ci/m3							1.827 Ci/m3
239 Pu		14.105 Ci/m3							3.654 Ci/m3
240 Pu		14.105 Ci/m3							3.654 Ci/m3
Am		27.863 Ci/m3							6.156 Ci/m3
TRU		63.126 Ci/m3							15.290 Ci/m3
TRU		**52 050 nCi/g**							**13 754 nCi/g**
Beta Gamma		945.462 Ci/m3							193.172 Ci/m3

DETAILED STREAM DATA SHEET FOR ONE DAILY BATCH

STREAM KW3 Nominal Case : 1 Batch 160 kg solids	ST-309 TOTAL SOLIDS LEACHING EFFLUENT	ST-310 LEACHED RESINS	ST-311 LEACHED SOLIDS	ST-401 TOTAL WATER USED FOR RESINS AND SOLIDS WASHING	ST-402 TOTAL SOLUTION FROM CENTRIFUGE	ST-403 RESINS + SOLID RESIDUES FROM LEACHING	ST-404 FINAL DECLOGGING (SOLIDS)	ST-405 FINAL DECLOGGING (RESIN)	ST-407 DISSOLUTION SOLUTION AFTER CENTRIFUGE
Volume	*0.153 m3*	*0.005 m3*	*0.106 m3*	*0.093 m3*	*2.996 m3*	*0.028 m3*	*0.028 m3*	*0.000 m3*	*2.819 m3*
Density	*1.111*	*1.122*	*1.182*	*1.000*	*1.196*	*1.106*	*1.107*	*1.168*	*1.209*
Total Mass	169.805 kg	5.385 kg	125.659 kg	92.810 kg	3,584.172 kg	30.832 kg	30.636 kg	0.196 kg	3,408.812 kg
Number of packages									
LIQUID									
Volume	*0.153 m3*	*0.005 m3*	*0.104 m3*	*0.093 m3*	*2.995 m3*	*0.026 m3*	*0.025 m3*	*0.000 m3*	*2.819 m3*
Density	*1.111*	*1.116*	*1.158*	*1.000*	*1.196*	*1.000*	*1.002*	*1.000*	*1.209*
Total Mass Liquid + Gaz	169.763 kg	5.350 kg	120.385 kg	92.810 kg	3,583.846 kg	25.540 kg	25.378 kg	0.162 kg	3,408.531 kg
H2O	135.845 kg	4.212 kg	87.600 kg	92.810 kg	2,367.116 kg	25.514 kg	25.351 kg	0.162 kg	2,226.856 kg
HNO3	33.026 kg	0.605 kg	32.150 kg		953.549 kg	0.026 kg	0.026 kg	0.000 kg	919.918 kg
H2C2O4		0.050 kg			0.050 kg	0.000 kg		0.000 kg	
HF	0.520 kg		0.520 kg		0.520 kg	0.000 kg	0.000 kg		
NaOH									
Al(NO3)3	0.057 kg	0.089 kg	0.010 kg		48.881 kg	0.000 kg	0.000 kg	0.000 kg	48.734 kg
AlF3									
Fe(NO3)3	0.047 kg	0.074 kg	0.008 kg		40.427 kg	0.000 kg	0.000 kg	0.000 kg	40.306 kg
CaO	0.000 kg	0.000 kg	0.000 kg		0.074 kg	0.000 kg	0.000 kg	0.000 kg	0.074 kg
NaNO2									
NaNO3									
Miscellaneous	0.012 kg	0.019 kg	0.002 kg		10.294 kg	0.000 kg	0.000 kg	0.000 kg	10.263 kg
UO2(NO3)2	0.255 kg	0.302 kg	0.096 kg		162.936 kg	0.000 kg	0.000 kg	0.000 kg	162.380 kg
Pu	*0.086 Ci*	*0.046 Ci*	*0.063 Ci*		*23.249 Ci*	*0.000 Ci*	*0.000 Ci*	*0.000 Ci*	*23.117 Ci*
Am	*0.038 Ci*	*0.030 Ci*	*0.020 Ci*		*18.371 Ci*	*0.000 Ci*	*0.000 Ci*	*0.000 Ci*	*18.303 Ci*
Cs	*0.810 Ci*	*0.279 Ci*	*0.555 Ci*		*261.515 Ci*	*0.000 Ci*	*0.000 Ci*	*0.000 Ci*	*260.425 Ci*
Sr	*0.565 Ci*	*0.669 Ci*	*0.212 Ci*		*361.527 Ci*	*0.000 Ci*	*0.000 Ci*	*0.000 Ci*	*360.293 Ci*
PCB	*0.000 g*		*0.000 g*		*0.037 g*	*0.000 g*	*0.000 g*		*0.037 g*
GAZ									
NO2									
NO									
PCB									
SOLIDS + RESINS									
Volume	*0.000 m3*	*0.000 m3*	*0.002 m3*		*0.000 m3*	*0.002 m3*	*0.002 m3*	*0.000 m3*	*0.000 m3*
Density	*2.279*	*6.220*	*2.236*		*2.326*	*2.261*	*2.236*	*6.220*	*2.305*
Total Mass Solids + Resins	0.043 kg	0.036 kg	5.274 kg		0.326 kg	5.292 kg	5.258 kg	0.034 kg	0.281 kg
Wt% solids	*0.03 wt%*	*0.66 wt%*	*4.20 wt%*	*0.00 wt%*	*0.01 wt%*	*17.16 wt%*	*17.16 wt%*	*17.16 wt%*	*0.01 wt%*
Al(NO3)3									
Al(OH)3	0.001 kg	0.004 kg	0.171 kg		0.011 kg	0.173 kg	0.170 kg	0.003 kg	0.009 kg
Al2O3									
Fe(NO3)3									
FeOOH	0.001 kg	0.003 kg	0.142 kg		0.009 kg	0.144 kg	0.141 kg	0.003 kg	0.007 kg
C	0.001 kg	0.000 kg	0.124 kg		0.008 kg	0.124 kg	0.124 kg	0.000 kg	0.007 kg
CaO	0.000 kg	0.000 kg	0.008 kg		0.000 kg	0.008 kg	0.008 kg	0.000 kg	0.000 kg
Na2C2O4									
CO2									
H2O									
SiO2	0.038 kg	0.010 kg	4.723 kg		0.288 kg	4.718 kg	4.708 kg	0.009 kg	0.250 kg
Grout									
Miscellaneous	0.001 kg	0.002 kg	0.098 kg		0.006 kg	0.100 kg	0.098 kg	0.002 kg	0.005 kg
Zircaloy									
Grafoil									
HNO3									
H2C2O4									
Na2U2O7									
U	0.000 kg	0.000 kg	0.000 kg		0.000 kg	0.001 kg	0.000 kg	0.000 kg	0.000 kg
U3O7	0.000 kg	0.005 kg	0.002 kg		0.001 kg	0.007 kg	0.002 kg	0.004 kg	0.001 kg
UH3	0.000 kg	0.001 kg	0.001 kg		0.000 kg	0.002 kg	0.001 kg	0.001 kg	0.000 kg
UO2	0.000 kg	0.010 kg	0.006 kg		0.003 kg	0.015 kg	0.006 kg	0.010 kg	0.002 kg
UO2(NO3)2									
UO4-4H2O	0.000 kg	0.000 kg	0.000 kg		0.000 kg	0.000 kg	0.000 kg	0.000 kg	0.000 kg
Pu	*0.000 Ci*	*0.001 Ci*	*0.007 Ci*		*0.004 Ci*	*0.008 Ci*	*0.007 Ci*	*0.001 Ci*	*0.003 Ci*
Am	*0.000 Ci*	*0.006 Ci*	*0.001 Ci*		*0.001 Ci*	*0.007 Ci*	*0.001 Ci*	*0.006 Ci*	*0.001 Ci*
Cs	*0.004 Ci*	*0.245 Ci*	*0.237 Ci*		*0.058 Ci*	*0.467 Ci*	*0.237 Ci*	*0.231 Ci*	*0.039 Ci*
Sr	*0.001 Ci*	*0.054 Ci*	*0.029 Ci*		*0.013 Ci*	*0.080 Ci*	*0.029 Ci*	*0.051 Ci*	*0.009 Ci*
PCB	*0.001 g*	*0.001 g*	*0.179 g*		*0.011 g*	*0.180 g*	*0.179 g*	*0.001 g*	*0.009 g*
RESINS									
Zeolite									
OIER									
Pu									
Am									
Cs									
TOTAL ACTIVITIES									
Total U	0.154 kg	0.197 kg	0.066 kg		98.427 kg	0.022 kg	0.008 kg	0.014 kg	98.090 kg
Total Pu	0.086 Ci	0.047 Ci	0.070 Ci		23.253 Ci	0.008 Ci	0.007 Ci	0.001 Ci	23.121 Ci
Total Am	0.038 Ci	0.037 Ci	0.021 Ci		18.372 Ci	0.007 Ci	0.001 Ci	0.006 Ci	18.303 Ci
TRU	0.124 Ci	0.083 Ci	0.091 Ci		41.625 Ci	0.015 Ci	0.008 Ci	0.007 Ci	41.424 Ci
Total Cs	0.815 Ci	0.524 Ci	0.792 Ci		261.572 Ci	0.468 Ci	0.237 Ci	0.231 Ci	260.464 Ci
Total Sr	0.566 Ci	0.723 Ci	0.241 Ci		361.540 Ci	0.080 Ci	0.029 Ci	0.051 Ci	360.302 Ci
Beta Gamma	1.381 Ci	1.247 Ci	1.033 Ci		623.113 Ci	0.548 Ci	0.266 Ci	0.282 Ci	620.767 Ci
CONCENTRATION									
PCB in liquid	0.25 ppb		0.06 ppb		10.20 ppb	0.00 ppb	0.00 ppb		10.71 ppb
PCB in solids	33.825 ppm	37.566 ppm	33.999 ppm		33.759 ppm	34.022 ppm	33.999 ppm	37.566 ppm	33.721 ppm
Solids	0.28 g/l	7.43 g/l	49.59 g/l		0.11 g/l	189.79 g/l	189.91 g/l	200.50 g/l	0.10 g/l
U	0.001 g/cm3	0.041 g/cm3	0.001 g/cm3		0.033 g/cm3	0.001 g/cm3	0.000 g/cm3	0.083 g/cm3	0.035 g/cm3
Pu total	0.563 Ci/m3	9.694 Ci/m3	0.662 Ci/m3		7.762 Ci/m3	0.292 Ci/m3	0.263 Ci/m3	5.260 Ci/m3	8.202 Ci/m3
238 Pu	0.113 Ci/m3	1.939 Ci/m3	0.132 Ci/m3		1.552 Ci/m3	0.058 Ci/m3	0.053 Ci/m3	1.052 Ci/m3	1.640 Ci/m3
239 Pu	0.225 Ci/m3	3.877 Ci/m3	0.265 Ci/m3		3.105 Ci/m3	0.117 Ci/m3	0.105 Ci/m3	2.104 Ci/m3	3.281 Ci/m3
240 Pu	0.225 Ci/m3	3.877 Ci/m3	0.265 Ci/m3		3.105 Ci/m3	0.117 Ci/m3	0.105 Ci/m3	2.104 Ci/m3	3.281 Ci/m3
Am	0.249 Ci/m3	7.659 Ci/m3	0.197 Ci/m3		6.133 Ci/m3	0.247 Ci/m3	0.032 Ci/m3	35.756 Ci/m3	6.493 Ci/m3
TRU	0.813 Ci/m3	17.353 Ci/m3	0.858 Ci/m3		13.895 Ci/m3	0.539 Ci/m3	0.294 Ci/m3	41.017 Ci/m3	14.695 Ci/m3
TRU	731 nCi/g	15 464 nCi/g	726 nCi/g		11 614 nCi/g	488 nCi/g	266 nCi/g	35 109 nCi/g	12 152 nCi/g
Beta Gamma	9.038 Ci/m3	259.900 Ci/m3	9.718 Ci/m3		208.007 Ci/m3	19.666 Ci/m3	9.612 Ci/m3	1,680.809 Ci/m3	220.213 Ci/m3

DETAILED STREAM DATA SHEET FOR ONE DAILY BATCH

STREAM KW3 Nominal Case : 1 Batch 160 kg solids	ST-408 TOTAL WATER USED FOR RESIN LEACHING AND WASHING	ST-409 TOTAL WATER FOR SOLIDS LEACHING AND WASHING	ST-410 SOLIDS FROM CENTRIFUGE	ST-501 TOTAL SOLUTION TO FILTRATION	ST-502 FILTER RINSING WATER	ST-503 TOTAL SOLUTION TO ADJUST	ST-504 RINSED FILTER TO CONDITIONING	ST-505 GROUT FORMERS FOR FILTER CONDITIONING	ST-506 CONDITIONED FILTERS
Volume	*0.000 m3*	*0.092 m3*	*0.023 m3*	*2.996 m3*	*0.012 m3*	*2.986 m3*	*0.000 m3*		*0.000 m3*
Density	*1.000*	*1.000*	*1.135*	*1.196*	*1.000*	*1.204*	*1.465*		*1.478*
Total Mass	0.365 kg	92.444 kg	26.568 kg	3,584.172 kg	11.789 kg	3,595.374 kg	0.586 kg		0.586 kg
Number of packages							0.025		0.025
LIQUID									
Volume	*0.000 m3*	*0.092 m3*	*0.021 m3*	*2.995 m3*	*0.012 m3*	*2.986 m3*	*0.000 m3*		*0.000 m3*
Density	*1.000*	*1.000*	*1.007*	*1.196*	*1.000*	*1.204*	*1.069*		*1.083*
Total Mass Liquid + Gaz	0.365 kg	92.444 kg	21.251 kg	3,583.846 kg	11.789 kg	3,595.342 kg	0.293 kg		0.293 kg
H2O	0.365 kg	92.444 kg	21.020 kg	2,367.116 kg	11.789 kg	2,378.651 kg	0.253 kg		0.253 kg
HNO3			0.180 kg	953.549 kg		953.518 kg	0.031 kg		0.031 kg
H2C2O4				0.050 kg		0.050 kg	0.000 kg		0.000 kg
HF				0.520 kg		0.520 kg	0.000 kg		0.000 kg
NaOH									
Al(NO3)3			0.010 kg	48.881 kg		48.879 kg	0.002 kg		0.002 kg
AlF3									
Fe(NO3)3			0.008 kg	40.427 kg		40.426 kg	0.001 kg		0.001 kg
CaO			0.000 kg	0.074 kg		0.074 kg	0.000 kg		0.000 kg
NaNO2									
NaNO3									
Miscellaneous			0.002 kg	10.294 kg		10.294 kg	0.000 kg		0.000 kg
UO2(NO3)2			0.032 kg	162.936 kg		162.931 kg	0.005 kg		0.005 kg
Pu			*0.005 Ci*	*23.249 Ci*		*23.248 Ci*	*0.001 Ci*		*0.001 Ci*
Am			*0.004 Ci*	*18.371 Ci*		*18.370 Ci*	*0.001 Ci*		*0.001 Ci*
Cs			*0.051 Ci*	*261.515 Ci*		*261.506 Ci*	*0.009 Ci*		*0.009 Ci*
Sr			*0.070 Ci*	*361.527 Ci*		*361.516 Ci*	*0.012 Ci*		*0.012 Ci*
PCB			*0.000 g*	*0.037 g*		*0.002 g*	*0.000 g*		*0.000 g*
GAZ									
NO2									
NO									
PCB									
SOLIDS + RESINS									
Volume			*0.002 m3*	*0.000 m3*		*0.000 m3*	*0.000 m3*		*0.000 m3*
Density			*2.305*	*2.326*		*2.326*	*2.326*		*2.326*
Total Mass Solids + Resins			5.317 kg	0.326 kg		0.033 kg	0.293 kg		0.293 kg
Wt% solids	*0.00 wt%*	*0.00 wt%*	*20.01 wt%*	*0.01 wt%*	*0.00 wt%*	*0.00 wt%*	*50.00 wt%*	*0.00 wt%*	*50.00 wt%*
Al(NO3)3									
Al(OH)3			0.171 kg	0.011 kg		0.001 kg	0.010 kg		0.010 kg
Al2O3									
Fe(NO3)3									
FeOOH			0.142 kg	0.009 kg		0.001 kg	0.008 kg		0.008 kg
C			0.124 kg	0.008 kg		0.001 kg	0.007 kg		0.007 kg
CaO			0.008 kg	0.000 kg		0.000 kg	0.000 kg		0.000 kg
Na2C2O4									
CO2									
H2O									
SiO2			4.723 kg	0.288 kg		0.029 kg	0.259 kg		0.259 kg
Grout									
Miscellaneous			0.098 kg	0.006 kg		0.001 kg	0.005 kg		0.005 kg
Zircaloy									
Grafoil									
HNO3									
H2C2O4									
Na2U2O7									
U			0.001 kg	0.000 kg		0.000 kg	0.000 kg		0.000 kg
U3O7			0.015 kg	0.001 kg		0.000 kg	0.001 kg		0.001 kg
UH3			0.003 kg	0.000 kg		0.000 kg	0.000 kg		0.000 kg
UO2			0.033 kg	0.003 kg		0.000 kg	0.002 kg		0.002 kg
UO2(NO3)2									
UO4-4H2O			0.000 kg	0.000 kg		0.000 kg	0.000 kg		0.000 kg
Pu			*0.066 Ci*	*0.004 Ci*		*0.000 Ci*	*0.003 Ci*		*0.003 Ci*
Am			*0.017 Ci*	*0.001 Ci*		*0.000 Ci*	*0.001 Ci*		*0.001 Ci*
Cs			*0.742 Ci*	*0.058 Ci*		*0.006 Ci*	*0.052 Ci*		*0.052 Ci*
Sr			*0.171 Ci*	*0.013 Ci*		*0.001 Ci*	*0.012 Ci*		*0.012 Ci*
PCB			*0.179 g*	*0.011 g*		*0.001 g*	*0.045 g*		*0.045 g*
RESINS									
Zeolite									
OIER									
Pu									
Am									
Cs									
TOTAL ACTIVITIES									
Total U			0.066 kg	98.427 kg		98.420 kg	0.006 kg		0.006 kg
Total Pu			0.070 Ci	23.253 Ci		23.248 Ci	0.004 Ci		0.004 Ci
Total Am			0.021 Ci	18.372 Ci		18.370 Ci	0.002 Ci		0.002 Ci
TRU			0.091 Ci	41.625 Ci		41.619 Ci	0.006 Ci		0.006 Ci
Total Cs			0.792 Ci	261.572 Ci		261.512 Ci	0.060 Ci		0.060 Ci
Total Sr			0.241 Ci	361.540 Ci		361.517 Ci	0.024 Ci		0.024 Ci
Beta Gamma			1.033 Ci	623.113 Ci		623.029 Ci	0.084 Ci		0.084 Ci
CONCENTRATION									
PCB in liquid			0.34 ppb	10.20 ppb		0.51 ppb	4.08 ppb		4.08 ppb
PCB in solids			33.721 ppm	33.759 ppm		33.759 ppm	152.172 ppm		152.172 ppm
Solids			227.05 g/l	0.11 g/l		0.01 g/l	732.41 g/l		738.76 g/l
U			0.003 g/cm3	0.033 g/cm3		0.033 g/cm3	0.016 g/cm3		0.016 g/cm3
Pu total			3.004 Ci/m3	7.762 Ci/m3		7.787 Ci/m3	10.639 Ci/m3		10.732 Ci/m3
238 Pu			0.601 Ci/m3	1.552 Ci/m3		1.557 Ci/m3	2.128 Ci/m3		2.146 Ci/m3
239 Pu			1.202 Ci/m3	3.105 Ci/m3		3.115 Ci/m3	4.256 Ci/m3		4.293 Ci/m3
240 Pu			1.202 Ci/m3	3.105 Ci/m3		3.115 Ci/m3	4.256 Ci/m3		4.293 Ci/m3
Am			0.893 Ci/m3	6.133 Ci/m3		6.153 Ci/m3	4.575 Ci/m3		4.615 Ci/m3
TRU			3.897 Ci/m3	13.895 Ci/m3		13.940 Ci/m3	15.214 Ci/m3		15.346 Ci/m3
TRU			3 435 nCi/g	11 614 nCi/g		11 576 nCi/g	10 386 nCi/g		10 386 nCi/g
Beta Gamma			44.126 Ci/m3	208.007 Ci/m3		208.680 Ci/m3	209.565 Ci/m3		211.382 Ci/m3

DETAILED STREAM DATA SHEET FOR ONE DAILY BATCH

STREAM KW3 Nominal Case : 1 Batch 160 kg solids	ST-601 SOLUTION BEFORE NEUTRALIZATION	ST-602 UO2(NO3)2 ADDITION SOLUTION	ST-603 FE(NO3)3 / AL(NO3)3 ADDITION SOLUTION	ST-604 FINAL SOLUTION SENT TO TWRS	ST-605 NANO2 ADDITION SOLUTION	ST-607 NAOH ADDITION SOLUTION	ST-608 WATER ADJUSTMENT	ST-701 RESINS + SOLID SOLUTION AFTER DECANTATION	ST-702 SUPERNATE TO ELIMINATE
Volume	***4.205 m3***	***0.014 m3***	***1.107 m3***	***9.123 m3***	***0.985 m3***	***1.401 m3***	***2.452 m3***		
Density	***1.209***	***1.323***	***1.328***	***1.176***	***1.251***	***1.403***	***1.000***		
Total Mass	**5,082.893 kg**	**17.887 kg**	**1,469.631 kg**	**10,732.717 kg**	**1,232.000 kg**	**1,966.213 kg**	**2,451.611 kg**		
Number of packages									
LIQUID									
Volume	***4.205 m3***	***0.014 m3***	***1.107 m3***	***8.992 m3***	***0.985 m3***	***1.401 m3***	***2.452 m3***		
Density	***1.209***	***1.323***	***1.328***	***1.153***	***1.251***	***1.403***	***1.000***	***1.000***	***1.000***
Total Mass Liquid + Gaz	**5,082.860 kg**	**17.887 kg**	**1,469.631 kg**	**10,368.508 kg**	**1,232.000 kg**	**1,966.213 kg**	**2,451.611 kg**		
H2O	3,325.556 kg	12.560 kg	934.345 kg	7,744.789 kg	739.200 kg	901.122 kg	2,451.611 kg		
HNO3	953.518 kg								
H2C2O4	0.050 kg								
HF	0.520 kg								
NaOH				95.200 kg		1,065.090 kg			
Al(NO3)3	48.879 kg								
AlF3				0.727 kg					
Fe(NO3)3	575.712 kg		535.287 kg						
CaO	0.074 kg			0.074 kg					
NaNO2				492.800 kg	492.800 kg				
NaNO3				2,024.623 kg					
Miscellaneous	10.294 kg			10.294 kg					
UO2(NO3)2	168.257 kg	5.327 kg							
Pu	*23.248 Ci*								
Am	*18.370 Ci*								
Cs	*261.506 Ci*			*261.506 Ci*					
Sr	*361.516 Ci*								
PCB	*0.002 g*			*0.000 g*					
GAZ									
NO2									
NO									
PCB									
SOLIDS + RESINS									
Volume	***0.000 m3***			***0.131 m3***					
Density	***2.326***			***2.787***					
Total Mass Solids + Resins	**0.033 kg**			**364.209 kg**					
Wt% solids	***0.00 wt%***	***0.00 wt%***	***0.00 wt%***	***3.39 wt%***	***0.00 wt%***	***0.00 wt%***	***0.00 wt%***	***0.00 wt%***	***0.00 wt%***
Al(NO3)3									
Al(OH)3	0.001 kg			17.225 kg					
Al2O3									
Fe(NO3)3									
FeOOH	0.001 kg			211.504 kg					
C	0.001 kg			0.001 kg					
CaO	0.000 kg			0.000 kg					
Na2C2O4				0.074 kg					
CO2									
H2O									
SiO2	0.029 kg			0.029 kg					
Grout									
Miscellaneous	0.001 kg			0.001 kg					
Zircaloy									
Grafoil									
HNO3									
H2C2O4									
Na2U2O7				135.375 kg					
U	0.000 kg			0.000 kg					
U3O7	0.000 kg			0.000 kg					
UH3	0.000 kg			0.000 kg					
UO2	0.000 kg			0.000 kg					
UO2(NO3)2									
UO4-4H2O	0.000 kg			0.000 kg					
Pu	*0.000 Ci*			*23.248 Ci*					
Am	*0.000 Ci*			*18.370 Ci*					
Cs	*0.006 Ci*			*0.006 Ci*					
Sr	*0.001 Ci*			*361.517 Ci*					
PCB	*0.001 g*			*0.003 g*					
RESINS									
Zeolite									
OIER									
Pu									
Am									
Cs									
TOTAL ACTIVITIES									
Total U	101.638 kg	3.218 kg		101.638 kg					
Total Pu	23.248 Ci			23.248 Ci					
Total Am	18.370 Ci			18.370 Ci					
TRU	**41.619 Ci**			**41.619 Ci**					
Total Cs	261.512 Ci			261.512 Ci					
Total Sr	361.517 Ci			361.517 Ci					
Beta Gamma	**623.029 Ci**			**623.029 Ci**					
CONCENTRATION									
PCB in liquid	0.36 ppb			0.01 ppb					
PCB in solids	33.759 ppm			0.008 ppm					
Solids	0.01 g/l			39.92 g/l					
U	0.024 g/cm3	0.238 g/cm3		0.011 g/cm3					
Pu total	**5.528 Ci/m3**			**2.548 Ci/m3**					
238 Pu	1.106 Ci/m3			0.510 Ci/m3					
239 Pu	2.211 Ci/m3			1.019 Ci/m3					
240 Pu	2.211 Ci/m3			1.019 Ci/m3					
Am	4.368 Ci/m3			2.014 Ci/m3					
TRU	9.896 Ci/m3			4.562 Ci/m3					
TRU	**8 188 nCi/g**			**3 878 nCi/g**					
Beta Gamma	**148.148 Ci/m3**			**68.291 Ci/m3**					

DETAILED STREAM DATA SHEET FOR ONE DAILY BATCH

STREAM KW3 Nominal Case : 1 Batch 160 kg solids	ST-703 GROUT FORMERS	ST-704 FINAL GROUT WASTES TO ERDF	ST-801 ADDED WATER TO OFF-GAS TREATMENT
Volume			*0.081 m3*
Density			*1.000*
Total Mass			80.737 kg
Number of packages			
LIQUID			
Volume			*0.081 m3*
Density			*1.000*
Total Mass Liquid + Gaz			80.737 kg
H2O			80.737 kg
HNO3			
H2C2O4			
HF			
NaOH			
Al(NO3)3			
AlF3			
Fe(NO3)3			
CaO			
NaNO2			
NaNO3			
Miscellaneous			
UO2(NO3)2			
Pu			
Am			
Cs			
Sr			
PCB			
GAZ			
NO2			
NO			
PCB			
SOLIDS + RESINS			
Volume			
Density			
Total Mass Solids + Resins			
Wt% solids	*0.00 wt%*	*0.00 wt%*	*0.00 wt%*
Al(NO3)3			
Al(OH)3			
Al2O3			
Fe(NO3)3			
FeOOH			
C			
CaO			
Na2C2O4			
CO2			
H2O			
SiO2			
Grout			
Miscellaneous			
Zircaloy			
Grafoil			
HNO3			
H2C2O4			
Na2U2O7			
U			
U3O7			
UH3			
UO2			
UO2(NO3)2			
UO4-4H2O			
Pu			
Am			
Cs			
Sr			
PCB			
RESINS			
Zeolite			
OIER			
Pu			
Am			
Cs			
TOTAL ACTIVITIES			
Total U			
Total Pu			
Total Am			
TRU			
Total Cs			
Total Sr			
Beta Gamma			
CONCENTRATION			
PCB in liquid			
PCB in solids			
Solids			
U			
Pu total			
238 Pu			
239 Pu			
240 Pu			
Am			
TRU			
TRU			
Beta Gamma			

DETAILED STREAM DATA SHEET FOR THE WHOLE STREAM

STREAM KW3 Nominal Case : TOTAL STREAM	ST-101 SLUDGE AT INLET OF TREATMENT UNIT	ST-102 WATER ADDITION FOR SCREEN WASHING	ST-103 SLUDGE STREAM FROM RESIN SEPARATION	ST-104 RESIN STREAM FROM RESIN SEPARATION	ST-201 SLUDGE TO DISSOLVER	ST-202 RECYCLED NITRIC ACID	ST-203 HNO3 FOR DISSOLUTION	ST-204 DISSOLUTION OFF-GAS	ST-205 DISSOLUTION SOLUTION
Volume	*26.744 m3*	*0.029 m3*	*26.743 m3*	*0.030 m3*	*26.743 m3*	*2.423 m3*	*28.246 m3*	*317.762 m3*	*54.648 m3*
Density	*1.118*	*1.000*	*1.117*	*1.213*	*1.117*	*1.125*	*1.278*	*0.002*	*1.246*
Total Mass	**29,890.201 kg**	**28.695 kg**	**29,883.027 kg**	**35.868 kg**	**29,883.027 kg**	**2,725.787 kg**	**36,098.794 kg**	**616.405 kg**	**68,098.512 kg**
Number of packages									
LIQUID									
Volume	*26.303 m3*	*0.029 m3*	*26.303 m3*	*0.029 m3*	*26.303 m3*	*2.423 m3*	*28.246 m3*	*317.762 m3*	*54.594 m3*
Density	*1.000*	*1.000*	*1.000*	*1.000*	*1.000*	*1.125*	*1.278*	*0.002*	*1.245*
Total Mass Liquid + Gaz	**26,303.377 kg**	**28.695 kg**	**26,303.377 kg**	**28.695 kg**	**26,303.377 kg**	**2,725.787 kg**	**36,098.794 kg**	**616.405 kg**	**67,972.409 kg**
H2O	26,303.377 kg	28.695 kg	26,303.377 kg	28.695 kg	26,303.377 kg	1,809.923 kg	12,609.156 kg		41,450.868 kg
HNO3						915.865 kg	23,489.638 kg		20,646.656 kg
H2C2O4									
HF									
NaOH									
Al(NO3)3									1,093.797 kg
AlF3									
Fe(NO3)3									904.628 kg
CaO									1.663 kg
NaNO2									
NaNO3									
Miscellaneous									230.346 kg
UO2(NO3)2									3,644.452 kg
Pu									*518.848 Ci*
Am									*410.783 Ci*
Cs									*5,844.985 Ci*
Sr									*8,086.430 Ci*
PCB									*0.819 g*
GAZ									
NO2								518.302 kg	
NO								98.103 kg	
PCB								*2.835 g*	
SOLIDS + RESINS									
Volume	*0.440 m3*		*0.439 m3*	*0.001 m3*	*0.439 m3*				*0.055 m3*
Density	*8.148*		*8.148*	*8.148*	*8.148*				*2.305*
Total Mass Solids + Resins	**3,586.824 kg**		**3,579.650 kg**	**7.174 kg**	**3,579.650 kg**				**126.103 kg**
Wt% solids	***12.00 wt%***	***0.00 wt%***	***11.98 wt%***	***20.00 wt%***	***11.98 wt%***	***0.00 wt%***	***0.00 wt%***	***0.00 wt%***	***0.19 wt%***
Al(NO3)3									
Al(OH)3	405.402 kg		404.591 kg	0.811 kg	404.591 kg				4.046 kg
Al2O3									
Fe(NO3)3									
FeOOH	336.369 kg		335.696 kg	0.673 kg	335.696 kg				3.357 kg
C	2.948 kg		2.943 kg	0.006 kg	2.943 kg				2.943 kg
CaO	1.852 kg		1.848 kg	0.004 kg	1.848 kg				0.185 kg
Na2C2O4									
CO2	2.924 kg		2.918 kg	0.006 kg	2.918 kg				
H2O									
SiO2	112.227 kg		112.003 kg	0.224 kg	112.003 kg				112.003 kg
Grout									
Miscellaneous	233.139 kg		232.672 kg	0.466 kg	232.672 kg				2.327 kg
Zircaloy									
Grafoil									
HNO3									
H2C2O4									
Na2U2O7									
U	66.483 kg		66.350 kg	0.133 kg	66.350 kg				0.033 kg
U3O7	692.206 kg		690.822 kg	1.384 kg	690.822 kg				0.345 kg
UH3	155.643 kg		155.332 kg	0.311 kg	155.332 kg				0.078 kg
UO2	1,568.645 kg		1,565.507 kg	3.137 kg	1,565.507 kg				0.783 kg
UO2(NO3)2									
UO4-4H2O	8.986 kg		8.968 kg	0.018 kg	8.968 kg				0.004 kg
Pu	*521.452 Ci*		*520.410 Ci*	*1.043 Ci*	*520.410 Ci*				*1.561 Ci*
Am	*412.018 Ci*		*411.194 Ci*	*0.824 Ci*	*411.194 Ci*				*0.411 Ci*
Cs	*5,874.321 Ci*		*5,862.573 Ci*	*11.749 Ci*	*5,862.573 Ci*				*17.588 Ci*
Sr	*8,106.689 Ci*		*8,090.475 Ci*	*16.213 Ci*	*8,090.475 Ci*				*4.045 Ci*
PCB	*15.024 g*		*14.994 g*	*0.030 g*	*14.994 g*				*4.252 g*
RESINS									
Zeolite									
OIER									
Pu									
Am									
Cs									
TOTAL ACTIVITIES									
Total U	2,206.986 kg		2,202.572 kg	4.414 kg	2,202.572 kg				2,202.572 kg
Total Pu	521.452 Ci		520.410 Ci	1.043 Ci	520.410 Ci				520.410 Ci
Total Am	412.018 Ci		411.194 Ci	0.824 Ci	411.194 Ci				411.194 Ci
TRU	**933.471 Ci**		**931.604 Ci**	**1.867 Ci**	**931.604 Ci**				**931.604 Ci**
Total Cs	5 874.321 Ci		5 862.573 Ci	11.749 Ci	5 862.573 Ci				5 862.573 Ci
Total Sr	8 106.689 Ci		8 090.475 Ci	16.213 Ci	8 090.475 Ci				8 090.475 Ci
Beta Gamma	**13 981.010 Ci**		**13 953.048 Ci**	**27.962 Ci**	**13 953.048 Ci**				**13 953.048 Ci**
CONCENTRATION									
PCB in liquid									12.06 ppb
PCB in solids	4.189 ppm		4.189 ppm	4.189 ppm	4.189 ppm				33.721 ppm
Solids	134.12 g/l		133.86 g/l	242.56 g/l	19.46 g/l				2.31 g/l
U	0.083 g/cm3		0.082 g/cm3	0.149 g/cm3	0.082 g/cm3				0.040 g/cm3
Pu total	**19.498 Ci/m3**		**19.460 Ci/m3**	**35.263 Ci/m3**	**19.460 Ci/m3**				**9.523 Ci/m3**
238 Pu	3.900 Ci/m3		3.892 Ci/m3	7.053 Ci/m3	3.892 Ci/m3				1.905 Ci/m3
239 Pu	7.799 Ci/m3		7.784 Ci/m3	14.105 Ci/m3	7.784 Ci/m3				3.809 Ci/m3
240 Pu	7.799 Ci/m3		7.784 Ci/m3	14.105 Ci/m3	7.784 Ci/m3				3.809 Ci/m3
Am	15.406 Ci/m3		15.376 Ci/m3	27.863 Ci/m3	15.376 Ci/m3				7.524 Ci/m3
TRU	34.904 Ci/m3		34.836 Ci/m3	63.126 Ci/m3	34.836 Ci/m3				17.047 Ci/m3
TRU	**31 230 nCi/g**		**31 175 nCi/g**	**52 050 nCi/g**	**31 175 nCi/g**				**13 680 nCi/g**
Beta Gamma	**522.780 Ci/m3**		**521.752 Ci/m3**	**945.462 Ci/m3**	**521.752 Ci/m3**				**255.325 Ci/m3**

DETAILED STREAM DATA SHEET FOR THE WHOLE STREAM

STREAM KW3 Nominal Case : TOTAL STREAM	ST-206 DISSOLVER WASHING WATER	ST-301 RESIN STREAM TO LEACHING	ST-302 TOTAL REAGENTS FOR RESINS AND SOLIDS LEACHING	ST-303 TOTAL OXALIC USED FOR RESIN LEACHING AND WASHING	ST-304 TOTAL HF USED FOR SOLIDS LEACHING AND WASHING	ST-305 TOTAL HNO3 USED FOR RESINS AND SOLIDS LEACHING	ST-306 TOTAL HNO3 USED FOR RESIN LEACHING AND WASHING	ST-307 TOTAL HNO3 USED FOR SOLIDS LEACHING AND WASHING	ST-308 TOTAL CLARIFIED SOLUTION FROM RESIN LEACHING
Volume	*8.519 m3*	*0.030 m3*	*1.978 m3*	*0.050 m3*	*1.041 m3*	*0.887 m3*	*0.025 m3*	*0.863 m3*	*0.112 m3*
Density	*1.000*	*1.213*	*1.167*	*1.100*	*1.075*	*1.278*	*1.278*	*1.278*	*1.112*
Total Mass	8,518.707 kg	35.868 kg	2,307.601 kg	54.519 kg	1,118.930 kg	1,134.151 kg	31.472 kg	1,102.679 kg	124.520 kg
Number of packages									
LIQUID									
Volume	*8.519 m3*	*0.029 m3*	*1.978 m3*	*0.050 m3*	*1.041 m3*	*0.887 m3*	*0.025 m3*	*0.863 m3*	*0.112 m3*
Density	*1.000*	*1.000*	*1.167*	*1.100*	*1.075*	*1.278*	*1.278*	*1.278*	*1.111*
Total Mass Liquid + Gaz	8,518.707 kg	28.695 kg	2,307.601 kg	54.519 kg	1,118.930 kg	1,134.151 kg	31.472 kg	1,102.679 kg	124.474 kg
H2O	8,518.707 kg	28.695 kg	1,556.826 kg	53.398 kg	1,107.273 kg	396.154 kg	10.993 kg	385.161 kg	98.971 kg
HNO3			737.997 kg			737.997 kg	20.479 kg	717.518 kg	13.561 kg
H2C2O4			1.121 kg	1.121 kg					1.121 kg
HF			11.657 kg		11.657 kg				
NaOH									
Al(NO3)3									1.992 kg
AlF3									
Fe(NO3)3									1.648 kg
CaO									0.003 kg
NaNO2									
NaNO3									
Miscellaneous									0.420 kg
UO2(NO3)2									6.758 kg
Pu									*1.022 Ci*
Am									*0.681 Ci*
Cs									*6.261 Ci*
Sr									*14.996 Ci*
PCB									
GAZ									
NO2									
NO									
PCB									
SOLIDS + RESINS									
Volume		*0.001 m3*							*0.000 m3*
Density		*8.148*							*6.220*
Total Mass Solids + Resins		7.174 kg							0.045 kg
Wt% solids	*0.00 wt%*	*20.00 wt%*	*0.00 wt%*	*0.00 wt%*	*0.00 wt%*	*0.00 wt%*	*0.00 wt%*	*0.00 wt%*	*0.04 wt%*
Al(NO3)3									
Al(OH)3		0.811 kg							0.005 kg
Al2O3									
Fe(NO3)3									
FeOOH		0.673 kg							0.004 kg
C		0.006 kg							0.000 kg
CaO		0.004 kg							0.000 kg
Na2C2O4									
CO2		0.006 kg							
H2O									
SiO2		0.224 kg							0.013 kg
Grout									
Miscellaneous		0.466 kg							0.003 kg
Zircaloy									
Grafoil									
HNO3									
H2C2O4									
Na2U2O7									
U		0.133 kg							0.001 kg
U3O7		1.384 kg							0.006 kg
UH3		0.311 kg							0.001 kg
UO2		3.137 kg							0.013 kg
UO2(NO3)2									
UO4-4H2O		0.018 kg							0.000 kg
Pu		*1.043 Ci*							*0.001 Ci*
Am		*0.824 Ci*							*0.008 Ci*
Cs		*11.749 Ci*							*0.311 Ci*
Sr		*16.213 Ci*							*0.069 Ci*
PCB		*0.030 g*							*0.002 g*
RESINS									
Zeolite									
OIER									
Pu									
Am									
Cs									
TOTAL ACTIVITIES									
Total U		4.414 kg							4.101 kg
Total Pu		1.043 Ci							1.023 Ci
Total Am		0.824 Ci							0.689 Ci
TRU		1.867 Ci							1.713 Ci
Total Cs		11.749 Ci							6.572 Ci
Total Sr		16.213 Ci							15.064 Ci
Beta Gamma		27.962 Ci							21.637 Ci
CONCENTRATION									
PCB in liquid									
PCB in solids		4.189 ppm							37.566 ppm
Solids		242.56 g/l							0.40 g/l
U		0.149 g/cm3							0.037 g/cm3
Pu total		35.263 Ci/m3							9.134 Ci/m3
238 Pu		7.053 Ci/m3							1.827 Ci/m3
239 Pu		14.105 Ci/m3							3.654 Ci/m3
240 Pu		14.105 Ci/m3							3.654 Ci/m3
Am		27.863 Ci/m3							6.156 Ci/m3
TRU		63.126 Ci/m3							15.290 Ci/m3
TRU		52 050 nCi/g							13 754 nCi/g
Beta Gamma		945.462 Ci/m3							193.172 Ci/m3

DETAILED STREAM DATA SHEET FOR THE WHOLE STREAM

STREAM KW3 Nominal Case : TOTAL STREAM	ST-309 TOTAL SOLIDS LEACHING EFFLUENT	ST-310 LEACHED RESINS	ST-311 LEACHED SOLIDS	ST-401 TOTAL WATER USED FOR RESINS AND SOLIDS WASHING	ST-402 TOTAL SOLUTION FROM CENTRIFUGE	ST-403 RESINS + SOLID RESIDUES FROM LEACHING	ST-404 FINAL DECLOGGING (SOLIDS)	ST-405 FINAL DECLOGGING (RESIN)	ST-407 DISSOLUTION SOLUTION AFTER CENTRIFUGE
Volume	*3.425 m3*	*0.108 m3*	*2.384 m3*	*2.081 m3*	*67.155 m3*	*0.625 m3*	*0.621 m3*	*0.004 m3*	*63.194 m3*
Density	*1.111*	*1.122*	*1.182*	*1.000*	*1.196*	*1.106*	*1.107*	*1.168*	*1.209*
Total Mass	3,806.637 kg	120.729 kg	2,816.971 kg	2,080.574 kg	80,348.712 kg	691.182 kg	686.785 kg	4.397 kg	76,417.556 kg
Number of packages									
LIQUID									
Volume	*3.424 m3*	*0.107 m3*	*2.331 m3*	*2.081 m3*	*67.152 m3*	*0.573 m3*	*0.568 m3*	*0.004 m3*	*63.191 m3*
Density	*1.111*	*1.116*	*1.158*	*1.000*	*1.196*	*1.000*	*1.002*	*1.000*	*1.209*
Total Mass Liquid + Gaz	3,805.684 kg	119.929 kg	2,698.747 kg	2,080.574 kg	80,341.409 kg	572.558 kg	568.916 kg	3.642 kg	76,411.251 kg
H2O	3,045.328 kg	94.423 kg	1,963.786 kg	2,080.574 kg	53,065.171 kg	571.960 kg	568.321 kg	3.639 kg	49,920.871 kg
HNO3	740.376 kg	13.563 kg	720.727 kg		21,376.335 kg	0.585 kg	0.584 kg	0.002 kg	20,622.397 kg
H2C2O4		1.121 kg			1.121 kg	0.000 kg		0.000 kg	
HF	11.648 kg		11.657 kg		11.648 kg	0.009 kg	0.009 kg		
NaOH									
Al(NO3)3	1.285 kg	1.993 kg	0.213 kg		1,095.789 kg	0.000 kg	0.000 kg	0.000 kg	1,092.512 kg
AlF3									
Fe(NO3)3	1.063 kg	1.648 kg	0.176 kg		906.275 kg	0.000 kg	0.000 kg	0.000 kg	903.565 kg
CaO	0.002 kg	0.003 kg	0.000 kg		1.666 kg	0.000 kg	0.000 kg	0.000 kg	1.661 kg
NaNO2									
NaNO3									
Miscellaneous	0.271 kg	0.420 kg	0.045 kg		230.765 kg	0.000 kg	0.000 kg	0.000 kg	230.075 kg
UO2(NO3)2	5.711 kg	6.759 kg	2.141 kg		3,652.639 kg	0.003 kg	0.002 kg	0.001 kg	3,640.170 kg
Pu	*1.922 Ci*	*1.022 Ci*	*1.415 Ci*		*521.183 Ci*	*0.001 Ci*	*0.001 Ci*	*0.000 Ci*	*518.239 Ci*
Am	*0.852 Ci*	*0.681 Ci*	*0.449 Ci*		*411.834 Ci*	*0.000 Ci*	*0.000 Ci*	*0.000 Ci*	*410.301 Ci*
Cs	*18.162 Ci*	*6.262 Ci*	*12.445 Ci*		*5,862.541 Ci*	*0.011 Ci*	*0.010 Ci*	*0.001 Ci*	*5,838.117 Ci*
Sr	*12.671 Ci*	*14.997 Ci*	*4.751 Ci*		*8,104.596 Ci*	*0.006 Ci*	*0.004 Ci*	*0.002 Ci*	*8,076.929 Ci*
PCB	*0.001 g*		*0.000 g*		*0.819 g*	*0.000 g*	*0.000 g*		*0.818 g*
GAZ									
NO2									
NO									
PCB									
SOLIDS + RESINS									
Volume	*0.000 m3*	*0.000 m3*	*0.053 m3*		*0.003 m3*	*0.052 m3*	*0.053 m3*	*0.000 m3*	*0.003 m3*
Density	*2.279*	*6.220*	*2.236*		*2.326*	*2.261*	*2.236*	*6.220*	*2.305*
Total Mass Solids + Resins	0.953 kg	0.800 kg	118.224 kg		7.304 kg	118.624 kg	117.869 kg	0.755 kg	6.305 kg
Wt% solids	*0.03 wt%*	*0.66 wt%*	*4.20 wt%*	*0.00 wt%*	*0.01 wt%*	*17.16 wt%*	*17.16 wt%*	*17.16 wt%*	*0.01 wt%*
Al(NO3)3									
Al(OH)3	0.031 kg	0.081 kg	3.824 kg		0.238 kg	3.889 kg	3.813 kg	0.076 kg	0.202 kg
Al2O3									
Fe(NO3)3									
FeOOH	0.025 kg	0.067 kg	3.173 kg		0.197 kg	3.227 kg	3.164 kg	0.063 kg	0.168 kg
C	0.022 kg	0.006 kg	2.781 kg		0.170 kg	2.779 kg	2.773 kg	0.006 kg	0.147 kg
CaO	0.001 kg	0.001 kg	0.175 kg		0.011 kg	0.175 kg	0.174 kg	0.001 kg	0.009 kg
Na2C2O4									
CO2									
H2O									
SiO2	0.849 kg	0.224 kg	105.871 kg		6.462 kg	105.765 kg	105.553 kg	0.212 kg	5.600 kg
Grout									
Miscellaneous	0.018 kg	0.047 kg	2.199 kg		0.137 kg	2.237 kg	2.193 kg	0.044 kg	0.116 kg
Zircaloy									
Grafoil									
HNO3									
H2C2O4									
Na2U2O7									
U	0.000 kg	0.010 kg	0.005 kg		0.002 kg	0.015 kg	0.005 kg	0.009 kg	0.002 kg
U3O7	0.002 kg	0.104 kg	0.056 kg		0.025 kg	0.153 kg	0.055 kg	0.098 kg	0.017 kg
UH3	0.000 kg	0.023 kg	0.012 kg		0.006 kg	0.034 kg	0.012 kg	0.022 kg	0.004 kg
UO2	0.004 kg	0.235 kg	0.126 kg		0.057 kg	0.347 kg	0.125 kg	0.222 kg	0.039 kg
UO2(NO3)2									
UO4-4H2O	0.000 kg	0.001 kg	0.001 kg		0.000 kg	0.002 kg	0.001 kg	0.001 kg	0.000 kg
Pu	*0.008 Ci*	*0.021 Ci*	*0.162 Ci*		*0.087 Ci*	*0.182 Ci*	*0.162 Ci*	*0.020 Ci*	*0.078 Ci*
Am	*0.002 Ci*	*0.143 Ci*	*0.019 Ci*		*0.031 Ci*	*0.154 Ci*	*0.019 Ci*	*0.134 Ci*	*0.021 Ci*
Cs	*0.099 Ci*	*5.487 Ci*	*5.320 Ci*		*1.290 Ci*	*10.480 Ci*	*5.304 Ci*	*5.176 Ci*	*0.879 Ci*
Sr	*0.021 Ci*	*1.216 Ci*	*0.650 Ci*		*0.292 Ci*	*1.795 Ci*	*0.648 Ci*	*1.147 Ci*	*0.202 Ci*
PCB	*0.032 g*	*0.030 g*	*4.020 g*		*0.247 g*	*4.036 g*	*4.007 g*	*0.028 g*	*0.213 g*
RESINS									
Zeolite									
OIER									
Pu									
Am									
Cs									
TOTAL ACTIVITIES									
Total U	3.455 kg	4.414 kg	1.470 kg		2,206.496 kg	0.490 kg	0.177 kg	0.313 kg	2,198.939 kg
Total Pu	1.930 Ci	1.043 Ci	1.577 Ci		521.270 Ci	0.183 Ci	0.163 Ci	0.020 Ci	518.317 Ci
Total Am	0.854 Ci	0.824 Ci	0.469 Ci		411.864 Ci	0.154 Ci	0.020 Ci	0.135 Ci	410.321 Ci
TRU	2.783 Ci	1.867 Ci	2.046 Ci		933.134 Ci	0.337 Ci	0.183 Ci	0.154 Ci	928.638 Ci
Total Cs	18.262 Ci	11.749 Ci	17.765 Ci		5 863.831 Ci	10.491 Ci	5.314 Ci	5.177 Ci	5 838.997 Ci
Total Sr	12.692 Ci	16.213 Ci	5.401 Ci		8 104.888 Ci	1.801 Ci	0.652 Ci	1.149 Ci	8 077.131 Ci
Beta Gamma	30.954 Ci	27.962 Ci	23.165 Ci		13 968.719 Ci	12.291 Ci	5.966 Ci	6.325 Ci	13 916.128 Ci
CONCENTRATION									
PCB in liquid	0.25 ppb		0.06 ppb		10.20 ppb	0.00 ppb	0.00 ppb		10.71 ppb
PCB in solids	33.825 ppm	37.566 ppm	33.999 ppm		33.759 ppm	34.022 ppm	33.999 ppm	37.566 ppm	33.721 ppm
Solids	0.28 g/l	7.43 g/l	49.59 g/l		0.11 g/l	189.79 g/l	189.91 g/l	200.50 g/l	0.10 g/l
U	0.001 g/cm3	0.041 g/cm3	0.001 g/cm3		0.033 g/cm3	0.001 g/cm3	0.000 g/cm3	0.083 g/cm3	0.035 g/cm3
Pu total	0.563 Ci/m3	9.694 Ci/m3	0.662 Ci/m3		7.762 Ci/m3	0.292 Ci/m3	0.263 Ci/m3	5.260 Ci/m3	8.202 Ci/m3
238 Pu	0.113 Ci/m3	1.939 Ci/m3	0.132 Ci/m3		1.552 Ci/m3	0.058 Ci/m3	0.053 Ci/m3	1.052 Ci/m3	1.640 Ci/m3
239 Pu	0.225 Ci/m3	3.877 Ci/m3	0.265 Ci/m3		3.105 Ci/m3	0.117 Ci/m3	0.105 Ci/m3	2.104 Ci/m3	3.281 Ci/m3
240 Pu	0.225 Ci/m3	3.877 Ci/m3	0.265 Ci/m3		3.105 Ci/m3	0.117 Ci/m3	0.105 Ci/m3	2.104 Ci/m3	3.281 Ci/m3
Am	0.249 Ci/m3	7.659 Ci/m3	0.197 Ci/m3		6.133 Ci/m3	0.247 Ci/m3	0.032 Ci/m3	35.756 Ci/m3	6.493 Ci/m3
TRU	0.813 Ci/m3	17.353 Ci/m3	0.858 Ci/m3		13.895 Ci/m3	0.539 Ci/m3	0.294 Ci/m3	41.017 Ci/m3	14.695 Ci/m3
TRU	731 nCi/g	15 464 nCi/g	726 nCi/g		11 614 nCi/g	488 nCi/g	266 nCi/g	35 109 nCi/g	12 152 nCi/g
Beta Gamma	9.038 Ci/m3	259.900 Ci/m3	9.718 Ci/m3		208.007 Ci/m3	19.666 Ci/m3	9.612 Ci/m3	1,680.809 Ci/m3	220.213 Ci/m3

DETAILED STREAM DATA SHEET FOR THE WHOLE STREAM

STREAM KW3 Nominal Case : TOTAL STREAM	ST-408 TOTAL WATER USED FOR RESIN LEACHING AND WASHING	ST-409 TOTAL WATER FOR SOLIDS LEACHING AND WASHING	ST-410 SOLIDS FROM CENTRIFUGE	ST-501 TOTAL SOLUTION TO FILTRATION	ST-502 FILTER RINSING WATER	ST-503 TOTAL SOLUTION TO ADJUST	ST-504 RINSED FILTER TO CONDITIONING	ST-505 GROUT FORMERS FOR FILTER CONDITIONING	ST-506 CONDITIONED FILTERS
Volume	*0.008 m3*	*2.072 m3*	*0.525 m3*	*67.155 m3*	*0.264 m3*	*66.930 m3*	*0.009 m3*		*0.009 m3*
Density	*1.000*	*1.000*	*1.135*	*1.196*	*1.000*	*1.204*	*1.465*		*1.478*
Total Mass	8.187 kg	2,072.387 kg	595.599 kg	80,348.712 kg	264.275 kg	80,599.841 kg	13.147 kg		13.147 kg
Number of packages							0.567		0.567
LIQUID									
Volume	*0.008 m3*	*2.072 m3*	*0.473 m3*	*67.152 m3*	*0.264 m3*	*66.929 m3*	*0.006 m3*		*0.006 m3*
Density	*1.000*	*1.000*	*1.007*	*1.196*	*1.000*	*1.204*	*1.069*		*1.083*
Total Mass Liquid + Gaz	8.187 kg	2,072.387 kg	476.400 kg	80,341.409 kg	264.275 kg	80,599.110 kg	6.573 kg		6.573 kg
H2O	8.187 kg	2,072.387 kg	471.228 kg	53,065.171 kg	264.275 kg	53,323.765 kg	5.681 kg		5.681 kg
HNO3			4.026 kg	21,376.335 kg		21,375.635 kg	0.700 kg		0.700 kg
H2C2O4				1.121 kg		1.121 kg	0.000 kg		0.000 kg
HF				11.648 kg		11.647 kg	0.000 kg		0.000 kg
NaOH									
Al(NO3)3			0.213 kg	1,095.789 kg		1,095.753 kg	0.036 kg		0.036 kg
AlF3									
Fe(NO3)3			0.176 kg	906.275 kg		906.246 kg	0.030 kg		0.030 kg
CaO			0.000 kg	1.666 kg		1.666 kg	0.000 kg		0.000 kg
NaNO2									
NaNO3									
Miscellaneous			0.045 kg	230.765 kg		230.758 kg	0.008 kg		0.008 kg
UO2(NO3)2			0.711 kg	3,652.639 kg		3,652.519 kg	0.120 kg		0.120 kg
Pu			*0.101 Ci*	*521.183 Ci*		*521.166 Ci*	*0.017 Ci*		*0.017 Ci*
Am			*0.080 Ci*	*411.834 Ci*		*411.820 Ci*	*0.013 Ci*		*0.013 Ci*
Cs			*1.140 Ci*	*5,862.541 Ci*		*5,862.349 Ci*	*0.192 Ci*		*0.192 Ci*
Sr			*1.577 Ci*	*8,104.596 Ci*		*8,104.330 Ci*	*0.265 Ci*		*0.265 Ci*
PCB			*0.000 g*	*0.819 g*		*0.041 g*	*0.000 g*		*0.000 g*
GAZ									
NO2									
NO									
PCB									
SOLIDS + RESINS									
Volume			*0.052 m3*	*0.003 m3*		*0.000 m3*	*0.003 m3*		*0.003 m3*
Density			*2.305*	*2.326*		*2.326*	*2.326*		*2.326*
Total Mass Solids + Resins			119.199 kg	7.304 kg		0.730 kg	6.573 kg		6.573 kg
Wt% solids	*0.00 wt%*	*0.00 wt%*	*20.01 wt%*	*0.01 wt%*	*0.00 wt%*	*0.00 wt%*	*50.00 wt%*	*0.00 wt%*	*50.00 wt%*
Al(NO3)3									
Al(OH)3			3.824 kg	0.238 kg		0.024 kg	0.214 kg		0.214 kg
Al2O3									
Fe(NO3)3									
FeOOH			3.173 kg	0.197 kg		0.020 kg	0.177 kg		0.177 kg
C			2.781 kg	0.170 kg		0.017 kg	0.153 kg		0.153 kg
CaO			0.175 kg	0.011 kg		0.001 kg	0.010 kg		0.010 kg
Na2C2O4									
CO2									
H2O									
SiO2			105.871 kg	6.462 kg		0.646 kg	5.816 kg		5.816 kg
Grout									
Miscellaneous			2.199 kg	0.137 kg		0.014 kg	0.123 kg		0.123 kg
Zircaloy									
Grafoil									
HNO3									
H2C2O4									
Na2U2O7									
U			0.031 kg	0.002 kg		0.000 kg	0.002 kg		0.002 kg
U3O7			0.326 kg	0.025 kg		0.002 kg	0.022 kg		0.022 kg
UH3			0.073 kg	0.006 kg		0.001 kg	0.005 kg		0.005 kg
UO2			0.740 kg	0.057 kg		0.006 kg	0.051 kg		0.051 kg
UO2(NO3)2									
UO4-4H2O			0.004 kg	0.000 kg		0.000 kg	0.000 kg		0.000 kg
Pu			*1.476 Ci*	*0.087 Ci*		*0.009 Ci*	*0.078 Ci*		*0.078 Ci*
Am			*0.389 Ci*	*0.031 Ci*		*0.003 Ci*	*0.028 Ci*		*0.028 Ci*
Cs			*16.625 Ci*	*1.290 Ci*		*0.129 Ci*	*1.161 Ci*		*1.161 Ci*
Sr			*3.824 Ci*	*0.292 Ci*		*0.029 Ci*	*0.263 Ci*		*0.263 Ci*
PCB			*4.020 g*	*0.247 g*		*0.025 g*	*1.000 g*		*1.000 g*
RESINS									
Zeolite									
OIER									
Pu									
Am									
Cs									
TOTAL ACTIVITIES									
Total U			1.470 kg	2,206.496 kg		2,206.352 kg	0.144 kg		0.144 kg
Total Pu			1.577 Ci	521.270 Ci		521.174 Ci	0.095 Ci		0.095 Ci
Total Am			0.469 Ci	411.864 Ci		411.823 Ci	0.041 Ci		0.041 Ci
TRU			2.046 Ci	933.134 Ci		932.997 Ci	0.137 Ci		0.137 Ci
Total Cs			17.765 Ci	5.863.831 Ci		5.862.478 Ci	1.353 Ci		1.353 Ci
Total Sr			5.401 Ci	8.104.888 Ci		8.104.360 Ci	0.528 Ci		0.528 Ci
Beta Gamma			23.165 Ci	13.968.719 Ci		13.966.838 Ci	1.881 Ci		1.881 Ci
CONCENTRATION									
PCB in liquid			0.34 ppb	10.20 ppb		0.51 ppb	4.08 ppb		4.08 ppb
PCB in solids			33.721 ppm	33.759 ppm		33.759 ppm	152.172 ppm		152.172 ppm
Solids			227.05 g/l	0.11 g/l		0.01 g/l	732.41 g/l		738.76 g/l
U			0.003 g/cm3	0.033 g/cm3		0.033 g/cm3	0.016 g/cm3		0.016 g/cm3
Pu total			3.004 Ci/m3	7.762 Ci/m3		7.787 Ci/m3	10.639 Ci/m3		10.732 Ci/m3
238 Pu			0.601 Ci/m3	1.552 Ci/m3		1.557 Ci/m3	2.128 Ci/m3		2.146 Ci/m3
239 Pu			1.202 Ci/m3	3.105 Ci/m3		3.115 Ci/m3	4.256 Ci/m3		4.293 Ci/m3
240 Pu			1.202 Ci/m3	3.105 Ci/m3		3.115 Ci/m3	4.256 Ci/m3		4.293 Ci/m3
Am			0.893 Ci/m3	6.133 Ci/m3		6.153 Ci/m3	4.575 Ci/m3		4.615 Ci/m3
TRU			3.897 Ci/m3	13.895 Ci/m3		13.940 Ci/m3	15.214 Ci/m3		15.346 Ci/m3
TRU			3.435 nCi/g	11.614 nCi/g		11.576 nCi/g	10.386 nCi/g		10.386 nCi/g
Beta Gamma			44.126 Ci/m3	208.007 Ci/m3		208.680 Ci/m3	209.565 Ci/m3		211.382 Ci/m3

DETAILED STREAM DATA SHEET FOR THE WHOLE STREAM

STREAM KW3 Nominal Case : TOTAL STREAM	ST-601 SOLUTION BEFORE NEUTRALIZATION	ST-602 UO2(NO3)2 ADDITION SOLUTION	ST-603 FE(NO3)3 / AL(NO3)3 ADDITION SOLUTION	ST-604 FINAL SOLUTION SENT TO TWRS	ST-605 NANO2 ADDITION SOLUTION	ST-607 NAOH ADDITION SOLUTION	ST-608 WATER ADJUSTMENT	ST-701 RESINS + SOLID SOLUTION AFTER DECANTATION	ST-702 SUPERNATE TO ELIMINATE
Volume	*94.276 m3*	*0.303 m3*	*24.808 m3*	*204.519 m3*	*22.074 m3*	*31.417 m3*	*54.959 m3*		
Density	*1.209*	*1.323*	*1.328*	*1.176*	*1.251*	*1.403*	*1.000*		
Total Mass	113,946.513 kg	400.988 kg	32,945.684 kg	240,602.293 kg	27,618.546 kg	44,077.873 kg	54,959.361 kg		
Number of packages									
LIQUID									
Volume	*94.276 m3*	*0.303 m3*	*24.808 m3*	*201.589 m3*	*22.074 m3*	*31.417 m3*	*54.959 m3*		
Density	*1.209*	*1.323*	*1.328*	*1.153*	*1.251*	*1.403*	*1.000*	*1.000*	*1.000*
Total Mass Liquid + Gaz	113,945.783 kg	400.988 kg	32,945.684 kg	232,437.589 kg	27,618.546 kg	44,077.873 kg	54,959.361 kg		
H2O	74,551.150 kg	281.571 kg	20,945.814 kg	173,619.981 kg	16,571.127 kg	20,201.049 kg	54,959.361 kg		
HNO3	21,375.635 kg								
H2C2O4	1.121 kg								
HF	11.647 kg								
NaOH				2,134.160 kg		23,876.823 kg			
Al(NO3)3	1,095.753 kg								
AlF3				16.306 kg					
Fe(NO3)3	12,906.116 kg		11,999.870 kg						
CaO	1.666 kg			1.666 kg					
NaNO2				11,047.418 kg	11,047.418 kg				
NaNO3				45,387.299 kg					
Miscellaneous	230.758 kg			230.758 kg					
UO2(NO3)2	3,771.937 kg	119.418 kg							
Pu	*521.166 Ci*								
Am	*411.820 Ci*								
Cs	*5,862.349 Ci*			*5,862.349 Ci*					
Sr	*8,104.330 Ci*								
PCB	*0.041 g*			*0.002 g*					
GAZ									
NO2									
NO									
PCB									
SOLIDS + RESINS									
Volume	*0.000 m3*			*2.930 m3*					
Density	*2.326*			*2.787*					
Total Mass Solids + Resins	0.730 kg			8,164.704 kg					
Wt% solids	*0.00 wt%*	*0.00 wt%*	*0.00 wt%*	*3.39 wt%*	*0.00 wt%*	*0.00 wt%*	*0.00 wt%*	*0.00 wt%*	*0.00 wt%*
Al(NO3)3									
Al(OH)3	0.024 kg			386.144 kg					
Al2O3									
Fe(NO3)3									
FeOOH	0.020 kg			4,741.423 kg					
C	0.017 kg			0.017 kg					
CaO	0.001 kg			0.001 kg					
Na2C2O4				1.669 kg					
CO2									
H2O									
SiO2	0.646 kg			0.646 kg					
Grout									
Miscellaneous	0.014 kg			0.014 kg					
Zircaloy									
Grafoil									
HNO3									
H2C2O4									
Na2U2O7				3,034.782 kg					
U	0.000 kg			0.000 kg					
U3O7	0.002 kg			0.002 kg					
UH3	0.001 kg			0.001 kg					
UO2	0.006 kg			0.006 kg					
UO2(NO3)2									
UO4-4H2O	0.000 kg			0.000 kg					
Pu	*0.009 Ci*			*521.174 Ci*					
Am	*0.003 Ci*			*411.823 Ci*					
Cs	*0.129 Ci*			*0.129 Ci*					
Sr	*0.029 Ci*			*8,104.360 Ci*					
PCB	*0.025 g*			*0.064 g*					
RESINS									
Zeolite									
OIER									
Pu									
Am									
Cs									
TOTAL ACTIVITIES									
Total U	2,278.488 kg	72.135 kg		2,278.488 kg					
Total Pu	521.174 Ci			521.174 Ci					
Total Am	411.823 Ci			411.823 Ci					
TRU	**932.997 Ci**			**932.997 Ci**					
Total Cs	5,862.478 Ci			5,862.478 Ci					
Total Sr	8,104.360 Ci			8,104.360 Ci					
Beta Gamma	**13,966.838 Ci**			**13,966.838 Ci**					
CONCENTRATION									
PCB in liquid	0.36 ppb			0.01 ppb					
PCB in solids	33.759 ppm			0.008 ppm					
Solids	0.01 g/l			39.92 g/l					
U	0.024 g/cm3	0.238 g/cm3		0.011 g/cm3					
Pu total	**5.528 Ci/m3**			**2.548 Ci/m3**					
238 Pu	1.106 Ci/m3			0.510 Ci/m3					
239 Pu	2.211 Ci/m3			1.019 Ci/m3					
240 Pu	2.211 Ci/m3			1.019 Ci/m3					
Am	4.368 Ci/m3			2.014 Ci/m3					
TRU	9.896 Ci/m3			4.562 Ci/m3					
TRU	**8 188 nCi/g**			**3 878 nCi/g**					
Beta Gamma	**148.148 Ci/m3**			**68.291 Ci/m3**					

DETAILED STREAM DATA SHEET FOR THE WHOLE STREAM

STREAM KW3 Nominal Case : TOTAL STREAM	ST-703 GROUT FORMERS	ST-704 FINAL GROUT WASTES TO ERDF	ST-801 ADDED WATER TO OFF-GAS TREATMENT
Volume			*1.810 m3*
Density			*1.000*
Total Mass			1,809.923 kg
Number of packages			
LIQUID			
Volume			*1.810 m3*
Density			*1.000*
Total Mass Liquid + Gaz			1,809.923 kg
H2O			1,809.923 kg
HNO3			
H2C2O4			
HF			
NaOH			
Al(NO3)3			
AlF3			
Fe(NO3)3			
CaO			
NaNO2			
NaNO3			
Miscellaneous			
UO2(NO3)2			
Pu			
Am			
Cs			
Sr			
PCB			
GAZ			
NO2			
NO			
PCB			
SOLIDS + RESINS			
Volume			
Density			
Total Mass Solids + Resins			
Wt% solids	*0.00 wt%*	*0.00 wt%*	*0.00 wt%*
Al(NO3)3			
Al(OH)3			
Al2O3			
Fe(NO3)3			
FeOOH			
C			
CaO			
Na2C2O4			
CO2			
H2O			
SiO2			
Grout			
Miscellaneous			
Zircaloy			
Grafoil			
HNO3			
H2C2O4			
Na2U2O7			
U			
U3O7			
UH3			
UO2			
UO2(NO3)2			
UO4-4H2O			
Pu			
Am			
Cs			
Sr			
PCB			
RESINS			
Zeolite			
OIER			
Pu			
Am			
Cs			
TOTAL ACTIVITIES			
Total U			
Total Pu			
Total Am			
TRU			
Total Cs			
Total Sr			
Beta Gamma			
CONCENTRATION			
PCB in liquid			
PCB in solids			
Solids			
U			
Pu total			
238 Pu			
239 Pu			
240 Pu			
Am			
TRU			
TRU			
Beta Gamma			

APPENDIX F

SOLID RESIDUES GROUTING

This page intentionally left blank.

SLUDGE TREATMENT
CHEMICAL FLOW SHEET

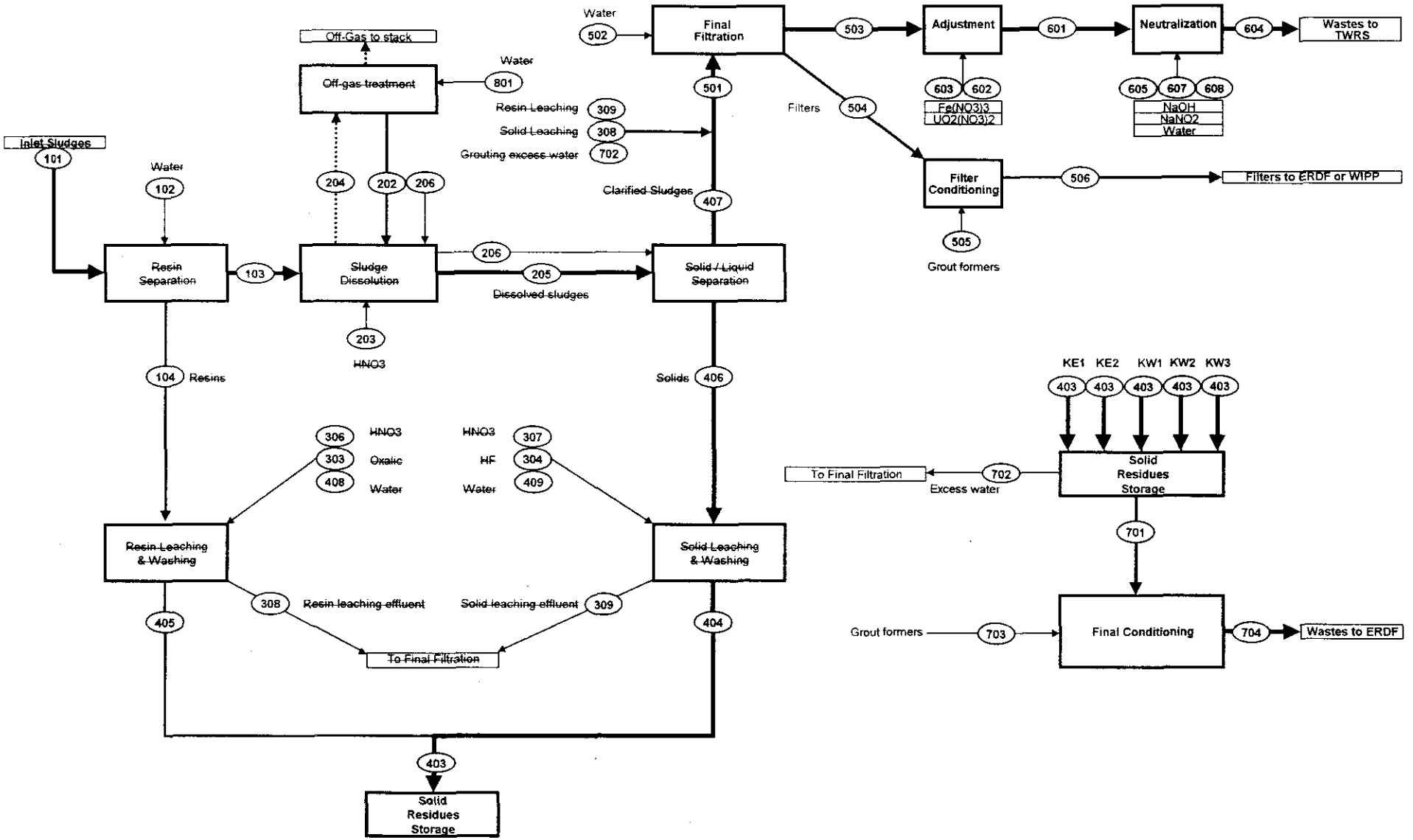

SLUDGE TREATMENT
MATERIAL BALANCE

ALL STREAMS-GROUTING OF SOLID RESIDUES
Nominal Case

OF BATCHES : 1.0

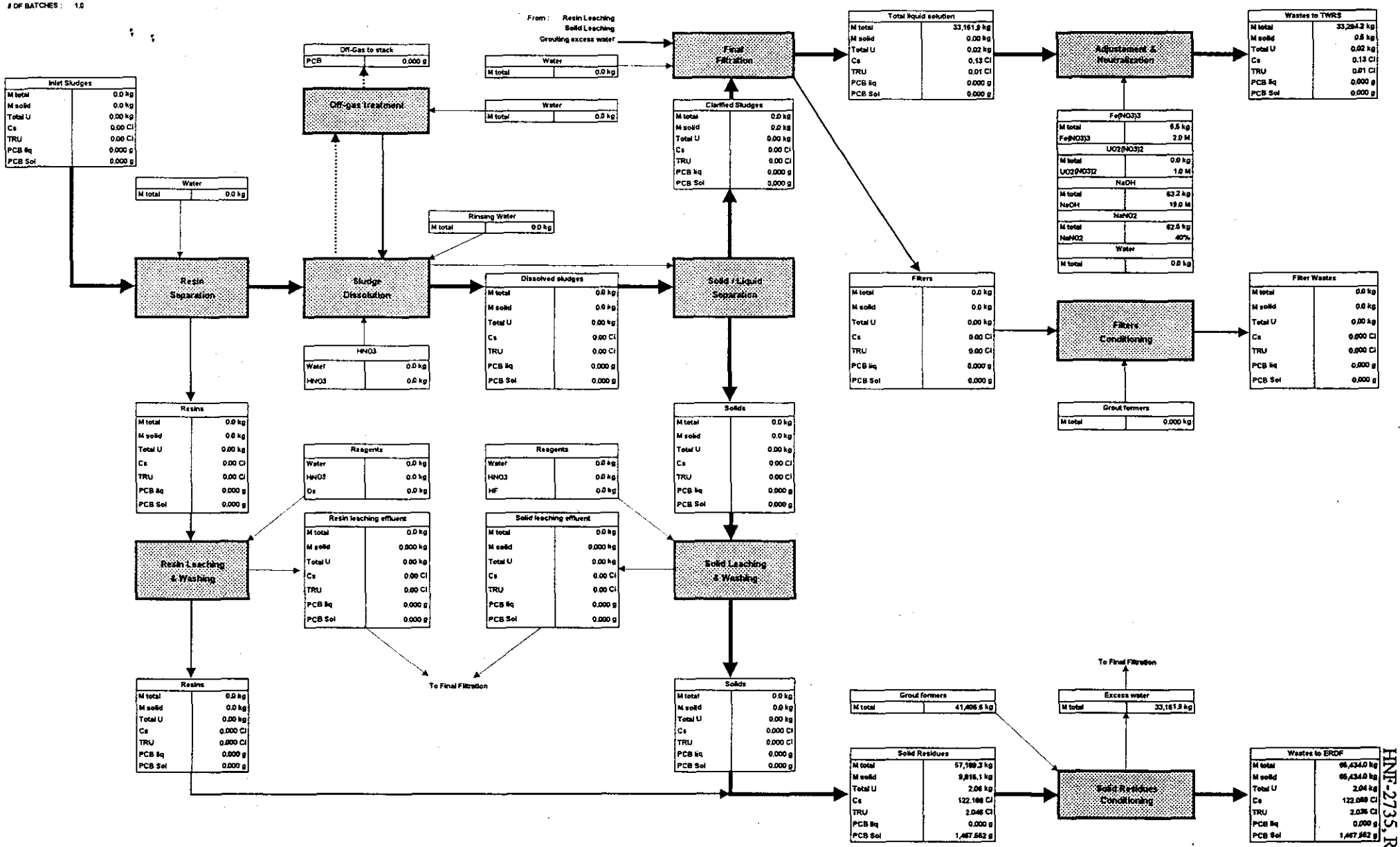

SLUDGE TREATMENT
CONCENTRATION

ALL STREAMS-GROUTING OF SOLID RESIDUES
Nominal Case

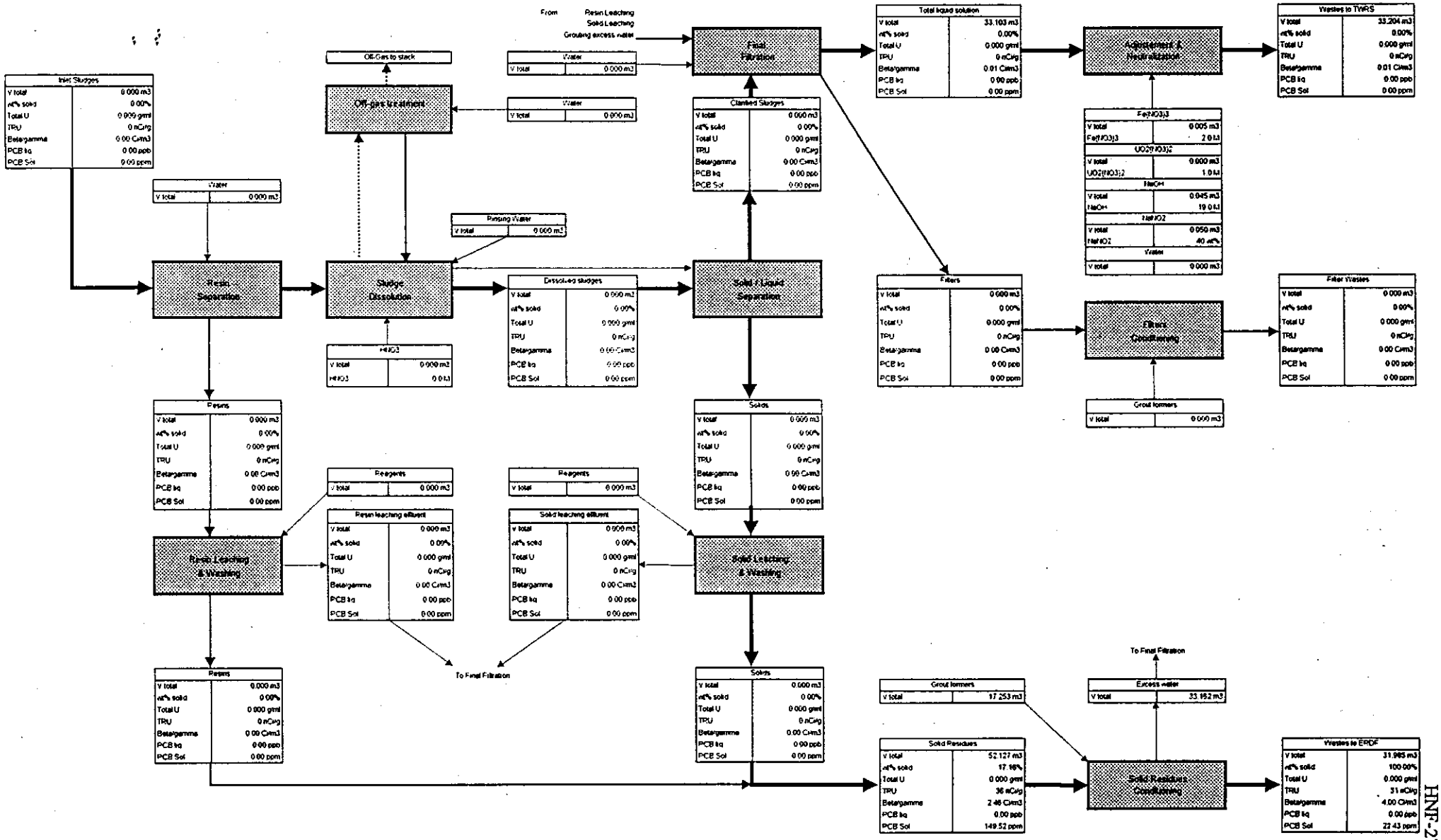

Requirements

ALL STREAMS-GROUTING OF SOLID RESIDUES Nominal Case	Requirements	Obtained results
Effluent sent to TWRS	**TWRS Requirements**	
PCB in liq	< 0.5 ppb	0.00 ppb
PCB in sol	< 2 ppm	0.001 ppm
Concentration	< 40 g/l	0.01 g/l
Na(NO3) concentration		0.02 M
NaOH Concentration	Req on [OH-] : 0.01 M	0.01 M
NaOH + Na(NO2) Concentration	Req on [OH-]+[NO2-] : none	0.02 M
Na(NO2) concentration	Req on [NO2-] : 0.01 M	0.01 M
Volume generated m3		**33 m3**
Grout Wastes sent to ERDF	**ERDF Requirements**	
PCB (ppm)		22.428 ppm
U g/ml	< 0.026 g/ml	0.0001 g/ml
Pu(Total)	Ci/m3	0.035 Ci/m3
238 Pu	< 1.5 Ci/m3	0.007 Ci/m3
239 Pu	< 0.029 Ci/m3	0.014 Ci/m3
240 Pu	< 0.029 Ci/m3	0.014 Ci/m3
Am	< 0.05 Ci/m3	0.029 Ci/m3
TRU	< 100 nanoCi/g	31 nCi/g
Volume generated m3		32.0 m3
Number of 4.8 m3 liners		**6.7**

DETAILED STREAM DATA SHEET

ALL STREAMS-GROUTIN Nominal Case	ST-101	ST-102	ST-103	ST-104	ST-201	ST-202	ST-203	ST-204	ST-205	ST-206
	SLUDGE AT INLET OF TREATMENT UNIT	WATER ADDITION FOR SCREEN WASHING	SLUDGE STREAM FROM RESIN SEPARATION	RESIN STREAM FROM RESIN SEPARATION	SLUDGE TO DISSOLVER	RECYCLED NITRIC ACID	HNO3 FOR DISSOLUTION	DISSOLUTION OFF-GAS	DISSOLUTION SOLUTION	DISSOLVER WASHING WATER
Volume										
Density										
Total Mass										
Number of packages										
LIQUID										
Volume										
Density										
Total Mass Liquid + Gaz										
H2O										
HNO3										
H2C2O4										
HF										
NaOH										
Al(NO3)3										
AlF3										
Fe(NO3)3										
CaO										
NaNO2										
NaNO3										
Miscelaneous										
UO2(NO3)2										
Pu										
Am										
Cs										
Sr										
PCB										
GAZ										
NO2										
NO										
PCB										
SOLIDS + RESINS										
Volume										
Density										
Total Mass Solid										
Wt% solids	*0.00 wt%*	*0.00 wt%*	*0.00 wt%*	*0.00 wt%*	*0.00 wt%*	*0.00 wt%*	*0.00 wt%*	*0.00 wt%*	*0.00 wt%*	*0.00 wt%*
Al(NO3)3										
Al(OH)3										
Al2O3										
Fe(NO3)3										
FeOOH										
C										
CaO										
Na2C2O4										
CO2										
H2O										
SiO2										
Grout										
Miscelaneous										
Zircaloy										
Grafoil										
HNO3										
H2C2O4										
Na2U2O7										
U										
U3O7										
UH3										
UO2										
UO2(NO3)2										
UO4-4H2O										
Pu										
Am										
Cs										
Sr										
PCB										
RESINS										
Zeolite										
OIER										
Pu										
Am										
Cs										
TOTAL ACTIVITIES										
Total U										
Total Pu										
Total Am										
TRU										
Total Cs										
Total Sr										
Beta Gamma										
CONCENTRATION										
PCB in liquid										
PCB in solids										
Solids										
U										
Pu total										
238 Pu										
239 Pu										
240 Pu										
Am										
TRU										
TRU										
Beta Gamma										

DETAILED STREAM DATA SHEET

ALL STREAMS-GROUTIN Nominal Case	ST-301	ST-302	ST-303	ST-304	ST-305	ST-306	ST-307	ST-308	ST-309	ST-310
	RESIN STREAM TO LEACHING	TOTAL REAGENTS FOR RESINS AND SOLIDS LEACHING	TOTAL OXALIC USED FOR RESIN LEACHING AND WASHING	TOTAL HF USED FOR SOLIDS LEACHING AND WASHING	TOTAL HNO3 USED FOR RESINS AND SOLIDS LEACHING	TOTAL HNO3 USED FOR RESIN LEACHING AND WASHING	TOTAL HNO3 USED FOR SOLIDS LEACHING AND WASHING	TOTAL CLARIFIED SOLUTION FROM RESIN LEACHING	TOTAL SOLIDS LEACHING EFFLUENT	LEACHED RESINS
Volume										
Density										
Total Mass										
Number of packages										
LIQUID										
Volume										
Density										
Total Mass Liquid + Gaz										
H2O										
HNO3										
H2C2O4										
HF										
NaOH										
Al(NO3)3										
AlF3										
Fe(NO3)3										
CaO										
NaNO2										
NaNO3										
Miscelaneous										
UO2(NO3)2										
Pu										
Am										
Cs										
Sr										
PCB										
GAZ										
NO2										
NO										
PCB										
SOLIDS + RESINS										
Volume										
Density										
Total Mass Solid										
Wt% solids	***0.00 wt%***	***0.00 wt%***	***0.00 wt%***	***0.00 wt%***	***0.00 wt%***	***0.00 wt%***	***0.00 wt%***	***0.00 wt%***	***0.00 wt%***	***0.00 wt%***
Al(NO3)3										
Al(OH)3										
Al2O3										
Fe(NO3)3										
FeOOH										
C										
CaO										
Na2C2O4										
CO2										
H2O										
SIO2										
Grout										
Miscelaneous										
Zircaloy										
Grafoil										
HNO3										
H2C2O4										
Na2U2O7										
U										
U3O7										
UH3										
UO2										
UO2(NO3)2										
UO4-4H2O										
Pu										
Am										
Cs										
Sr										
PCB										
RESINS										
Zeolite										
OIER										
Pu										
Am										
Cs										
TOTAL ACTIVITIES										
Total U										
Total Pu										
Total Am										
TRU										
Total Cs										
Total Sr										
Beta Gamma										
CONCENTRATION										
PCB in liquid										
PCB in solids										
Solids										
U										
Pu total										
238 Pu										
239 Pu										
240 Pu										
Am										
TRU										
TRU										
Beta Gamma										

DETAILED STREAM DATA SHEET

ALL STREAMS-GROUTIN Nominal Case	ST-311 LEACHED SOLIDS	ST-401 TOTAL WATER USED FOR RESINS AND SOLIDS WASHING	ST-402 TOTAL SOLUTION FROM CENTRIFUGE	ST-403 RESINS + SOLID RESIDUES FROM LEACHING	ST-404 FINAL DECLOGGING (SOLIDS)	ST-405 FINAL DECLOGGING (RESIN)	ST-407 DISSOLUTION SOLUTION AFTER CENTRIFUGE	ST-408 TOTAL WATER USED FOR RESIN LEACHING AND WASHING	ST-409 TOTAL WATER FOR SOLIDS LEACHING AND WASHING	ST-410 SOLIDS FROM CENTRIFUGE
Volume				*52.127 m3*						
Density				*1.097*						
Total Mass				57,189.304 kg						
Number of packages										
LIQUID										
Volume				*47.374 m3*						
Density				*1.000*						
Total Mass Liquid + Gaz				47,374.206 kg						
H2O				47,328.531 kg						
HNO3				44.608 kg						
H2C2O4				0.258 kg						
HF				0.654 kg						
NaOH										
Al(NO3)3				0.031 kg						
AlF3										
Fe(NO3)3				0.080 kg						
CaO				0.001 kg						
NaNO2										
NaNO3										
Miscelaneous				0.006 kg						
UO2(NO3)2				0.037 kg						
Pu				*0.010 Ci*						
Am				*0.005 Ci*						
Cs				*0.185 Ci*						
Sr				*0.062 Ci*						
PCB				*0.000 g*						
GAZ										
NO2										
NO										
PCB										
SOLIDS + RESINS										
Volume				*4.753 m3*						
Density				*2.065*						
Total Mass Solid				9,815.098 kg						
Wt% solids	*0.00 wt%*	*0.00 wt%*	*0.00 wt%*	*17.16 wt%*	*0.00 wt%*	*0.00 wt%*	*0.00 wt%*	*0.00 wt%*	*0.00 wt%*	*0.00 wt%*
Al(NO3)3										
Al(OH)3				9.688 kg						
Al2O3				86.158 kg						
Fe(NO3)3										
FeOOH				84.784 kg						
C				33.558 kg						
CaO				29.008 kg						
Na2C2O4										
CO2										
H2O										
SiO2				7,426.116 kg						
Grout										
Miscelaneous				18.050 kg						
Zircaloy				194.744 kg						
Grafoil				52.465 kg						
HNO3										
H2C2O4										
Na2U2O7										
U				0.685 kg						
U3O7				0.534 kg						
UH3				0.072 kg						
UO2				0.920 kg						
UO2(NO3)2										
UO4-4H2O				0.011 kg						
Pu				*0.602 Ci*						
Am				*0.665 Ci*						
Cs				*47.242 Ci*						
Sr				*6.004 Ci*						
PCB				*1,467.552 g*						
RESINS										
Zeolite				696.527 kg						
OIER				1,181.777 kg						
Pu				*0.506 Ci*						
Am				*0.258 Ci*						
Cs				*74.762 Ci*						
TOTAL ACTIVITIES										
Total U				2.059 kg						
Total Pu				1.117 Ci						
Total Am				0.929 Ci						
TRU				2.046 Ci						
Total Cs				122.188 Ci						
Total Sr				6.066 Ci						
Beta Gamma				128.254 Ci						
CONCENTRATION										
PCB in liquid				0.00 ppb						
PCB in solids				149.520 ppm						
Solids				188.29 g/l						
U				0.000 g/cm3						
Pu total				0.021 Ci/m3						
238 Pu				0.004 Ci/m3						
239 Pu				0.009 Ci/m3						
240 Pu				0.009 Ci/m3						
Am				0.018 Ci/m3						
TRU				0.039 Ci/m3						
TRU				36 nCi/g						
Beta Gamma				2.460 Ci/m3						

DETAILED STREAM DATA SHEET

ALL STREAMS-GROUTIN Nominal Case	ST-601 TOTAL SOLUTION TO FILTRATION	ST-602 FILTER RINSING WATER	ST-603 TOTAL SOLUTION TO ADJUST	ST-604 RINSED FILTER TO CONDITIONING	ST-605 GROUT FORMERS FOR FILTER CONDITIONING	ST-606 CONDITIONED FILTERS	ST-901 SOLUTION BEFORE NEUTRALIZATION	ST-902 UO2(NO3)2 ADDITION SOLUTION	ST-903 FE(NO3)3 / AL(NO3)3 ADDITION SOLUTION	ST-904 FINAL SOLUTION SENT TO TWRS
Volume	*33.104 m3*		*33.103 m3*				*33.108 m3*	*0.000 m3*	*0.005 m3*	*33.204 m3*
Density	*1.002*		*1.002*				*1.002*	*1.323*	*1.328*	*1.003*
Total Mass	33,161.944 kg		33,161.944 kg				33,168.494 kg	0.003 kg	6.547 kg	33,294.161 kg
Number of packages										
LIQUID										
Volume	*33.104 m3*		*33.103 m3*				*33.108 m3*	*0.000 m3*	*0.005 m3*	*33.204 m3*
Density	*1.002*		*1.002*			*1.001*	*1.002*	*1.323*	*1.328*	*1.003*
Total Mass Liquid + Gaz	33,161.944 kg		33,161.944 kg				33,168.494 kg	0.003 kg	6.547 kg	33,293.664 kg
H2O	33,129.972 kg		33,129.972 kg				33,134.407 kg	0.002 kg	4.433 kg	33,210.277 kg
HNO3	31.225 kg		31.225 kg				31.225 kg			
H2C2O4	0.180 kg		0.180 kg				0.180 kg			
HF	0.458 kg		0.458 kg				0.458 kg			
NaOH										13.000 kg
Al(NO3)3	0.022 kg		0.022 kg				2.022 kg		2.000 kg	
AlF3										0.641 kg
Fe(NO3)3	0.056 kg		0.056 kg				0.170 kg		0.114 kg	
CaO	0.001 kg		0.001 kg				0.001 kg			0.001 kg
NaNO2										25.000 kg
NaNO3										44.740 kg
Miscelaneous	0.004 kg		0.004 kg				0.004 kg			0.004 kg
UO2(NO3)2	0.026 kg		0.026 kg				0.027 kg	0.001 kg		
Pu	*0.007 Ci*		*0.007 Ci*				*0.007 Ci*			
Am	*0.004 Ci*		*0.004 Ci*				*0.004 Ci*			
Cs	*0.129 Ci*		*0.129 Ci*				*0.129 Ci*			*0.129 Ci*
Sr	*0.043 Ci*		*0.043 Ci*				*0.043 Ci*			
PCB	*0.000 g*		*0.000 g*				*0.000 g*			*0.000 g*
GAZ										
NO2										
NO										
PCB										
SOLIDS + RESINS										
Volume										*0.000 m3*
Density										*2.241*
Total Mass Solid										0.497 kg
Wt% solids	*0.00 wt%*	*0.00 wt%*	*0.00 wt%*	*0.00 wt%*	*0.00 wt%*	*0.00 wt%*	*0.00 wt%*	*0.00 wt%*	*0.00 wt%*	*0.00 wt%*
Al(NO3)3										
Al(OH)3										0.145 kg
Al2O3										
Fe(NO3)3										
FeOOH										0.062 kg
C										
CaO										
Na2C2O4										0.269 kg
CO2										
H2O										
SiO2										
Grout										
Miscelaneous										
Zircaloy										
Grafoil										
HNO3										
H2C2O4										
Na2U2O7										0.022 kg
U										
U3O7										
UH3										
UO2										
UO2(NO3)2										
UO4-4H2O										
Pu										*0.007 Ci*
Am										*0.004 Ci*
Cs										
Sr										*0.043 Ci*
PCB										*0.000 g*
RESINS										
Zeolite										
OIER										
Pu										
Am										
Cs										
TOTAL ACTIVITIES										
Total U	0.016 kg		0.016 kg				0.016 kg	0.001 kg		0.016 kg
Total Pu	0.007 Ci		0.007 Ci				0.007 Ci			0.007 Ci
Total Am	0.004 Ci		0.004 Ci				0.004 Ci			0.004 Ci
TRU	0.011 Ci		0.011 Ci				0.011 Ci			0.011 Ci
Total Cs	0.129 Ci		0.129 Ci				0.129 Ci			0.129 Ci
Total Sr	0.043 Ci		0.043 Ci				0.043 Ci			0.043 Ci
Beta Gamma	0.173 Ci		0.173 Ci				0.173 Ci			0.173 Ci
CONCENTRATION										
PCB in liquid	0.00 ppb		0.00 ppb				0.00 ppb			0.00 ppb
PCB in solids										0.001 ppm
Solids										0.01 g/l
U	0.000 g/cm3		0.000 g/cm3				0.000 g/cm3	0.238 g/cm3		0.000 g/cm3
Pu total	0.000 Ci/m3		0.000 Ci/m3				0.000 Ci/m3			0.000 Ci/m3
238 Pu	0.000 Ci/m3		0.000 Ci/m3				0.000 Ci/m3			0.000 Ci/m3
239 Pu	0.000 Ci/m3		0.000 Ci/m3				0.000 Ci/m3			0.000 Ci/m3
240 Pu	0.000 Ci/m3		0.000 Ci/m3				0.000 Ci/m3			0.000 Ci/m3
Am	0.000 Ci/m3		0.000 Ci/m3				0.000 Ci/m3			0.000 Ci/m3
TRU	0.000 Ci/m3		0.000 Ci/m3				0.000 Ci/m3			0.000 Ci/m3
TRU	0 nCi/g		0 nCi/g				0 nCi/g			0 nCi/g
Beta Gamma	0.005 Ci/m3		0.005 Ci/m3				0.005 Ci/m3			0.005 Ci/m3

DETAILED STREAM DATA SHEET

ALL STREAMS-GROUTIN Nominal Case	ST-606 NANO2 ADDITION SOLUTION	ST-607 NAOH ADDITION SOLUTION	ST-608 WATER ADJUSTMENT	ST-701 RESINS + SOLID SOLUTION AFTER DECANTATION	ST-702 SUPERNATE TO ELIMINATE	ST-703 GROUT FORMERS
Volume	*0.050 m3*	*0.045 m3*		*18.965 m3*	*33.162 m3*	*17.253 m3*
Density	*1.251*	*1.403*		*1.267*	*1.000*	*2.400*
Total Mass	62.500 kg	63.167 kg		24,027.360 kg	33,161.944 kg	41,406.626 kg
Number of packages						
LIQUID						
Volume	*0.050 m3*	*0.045 m3*		*14.212 m3*	*33.162 m3*	
Density	*1.251*	*1.403*	*1.000*	*1.000*	*1.000*	
Total Mass Liquid + Gaz	62.500 kg	63.167 kg		14,212.262 kg	33,161.944 kg	
H2O	37.500 kg	28.950 kg		14,198.559 kg	33,129.972 kg	
HNO3				13.382 kg	31.225 kg	
H2C2O4				0.077 kg	0.180 kg	
HF				0.196 kg	0.458 kg	
NaOH		34.217 kg				
Al(NO3)3				0.009 kg	0.022 kg	
AlF3						
Fe(NO3)3				0.024 kg	0.056 kg	
CaO				0.000 kg	0.001 kg	
NaNO2	25.000 kg					
NaNO3						
Miscelaneous				0.002 kg	0.004 kg	
UO2(NO3)2				0.011 kg	0.026 kg	
Pu				*0.003 Ci*	*0.007 Ci*	
Am				*0.002 Ci*	*0.004 Ci*	
Cs				*0.055 Ci*	*0.129 Ci*	
Sr				*0.019 Ci*	*0.043 Ci*	
PCB				*0.000 g*	*0.000 g*	
GAZ						
NO2						
NO						
PCB						
SOLIDS + RESINS						
Volume				*4.753 m3*		*17.253 m3*
Density				*2.065*		*2.400*
Total Mass Solid				9,815.098 kg		41,406.626 kg
Wt% solids	*0.00 wt%*	*0.00 wt%*	*0.00 wt%*	*40.85 wt%*	*0.00 wt%*	*100.00 wt%*
Al(NO3)3						
Al(OH)3				9.688 kg		
Al2O3				86.158 kg		
Fe(NO3)3						
FeOOH				84.784 kg		
C				33.558 kg		
CaO				29.008 kg		
Na2C2O4						
CO2						
H2O						
SiO2				7,426.116 kg		
Grout						41,406.626 kg
Miscelaneous				18.050 kg		
Zircaloy				194.744 kg		
Grafoil				52.465 kg		
HNO3						
H2C2O4						
Na2U2O7						
U				0.685 kg		
U3O7				0.534 kg		
UH3				0.072 kg		
UO2				0.920 kg		
UO2(NO3)2						
UO4-4H2O				0.011 kg		
Pu				*0.602 Ci*		
Am				*0.665 Ci*		
Cs				*47.242 Ci*		
Sr				*6.004 Ci*		
PCB				*1,467.552 g*		
RESINS						
Zeolite				696.527 kg		
OIER				1,181.777 kg		
Pu				*0.506 Ci*		
Am				*0.258 Ci*		
Cs				*74.762 Ci*		
TOTAL ACTIVITIES						
Total U				2.043 kg	0.016 kg	
Total Pu				1.110 Ci	0.007 Ci	
Total Am				0.925 Ci	0.004 Ci	
TRU				2.035 Ci	0.011 Ci	
Total Cs				122.059 Ci	0.129 Ci	
Total Sr				6.022 Ci	0.043 Ci	
Beta Gamma				128.081 Ci	0.173 Ci	
CONCENTRATION						
PCB in liquid				0.00 ppb	0.00 ppb	
PCB in solids				149.520 ppm		
Solids				517.54 g/l		
U				0.000 g/cm3	0.000 g/cm3	
Pu total				0.059 Ci/m3	0.000 Ci/m3	
238 Pu				0.012 Ci/m3	0.000 Ci/m3	
239 Pu				0.023 Ci/m3	0.000 Ci/m3	
240 Pu				0.023 Ci/m3	0.000 Ci/m3	
Am				0.049 Ci/m3	0.000 Ci/m3	
TRU				0.107 Ci/m3	0.000 Ci/m3	
TRU				85 nCi/g	0 nCi/g	
Beta Gamma				6.754 Ci/m3	0.005 Ci/m3	

APPENDIX G

SUMMARY STREAM

This page intentionally left blank.

SLUDGE TREATMENT
CHEMICAL FLOW SHEET

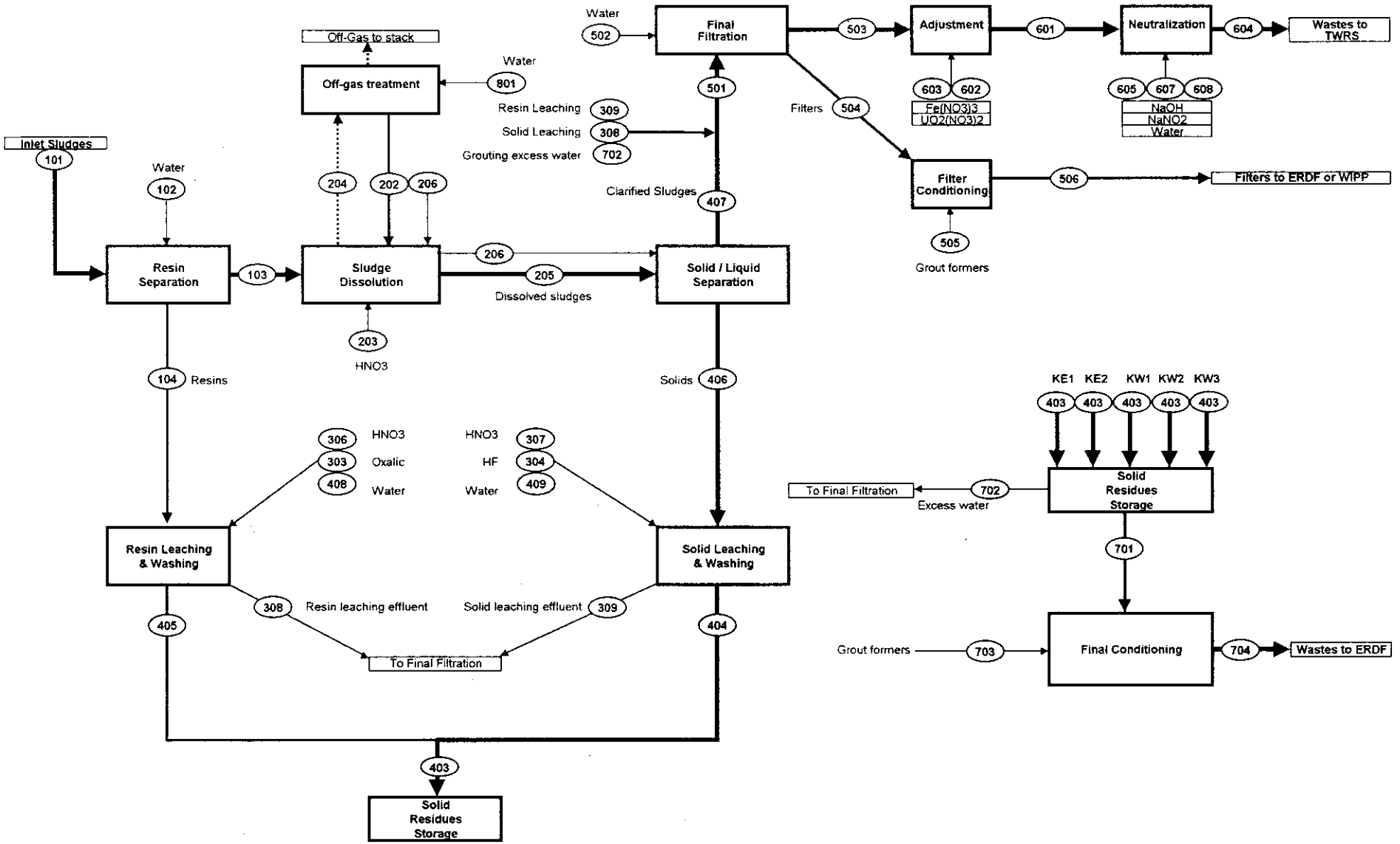

SLUDGE TREATMENT
MATERIAL BALANCE

TOTAL STREAMS
Nominal Case
OF BATCHES : 214.4

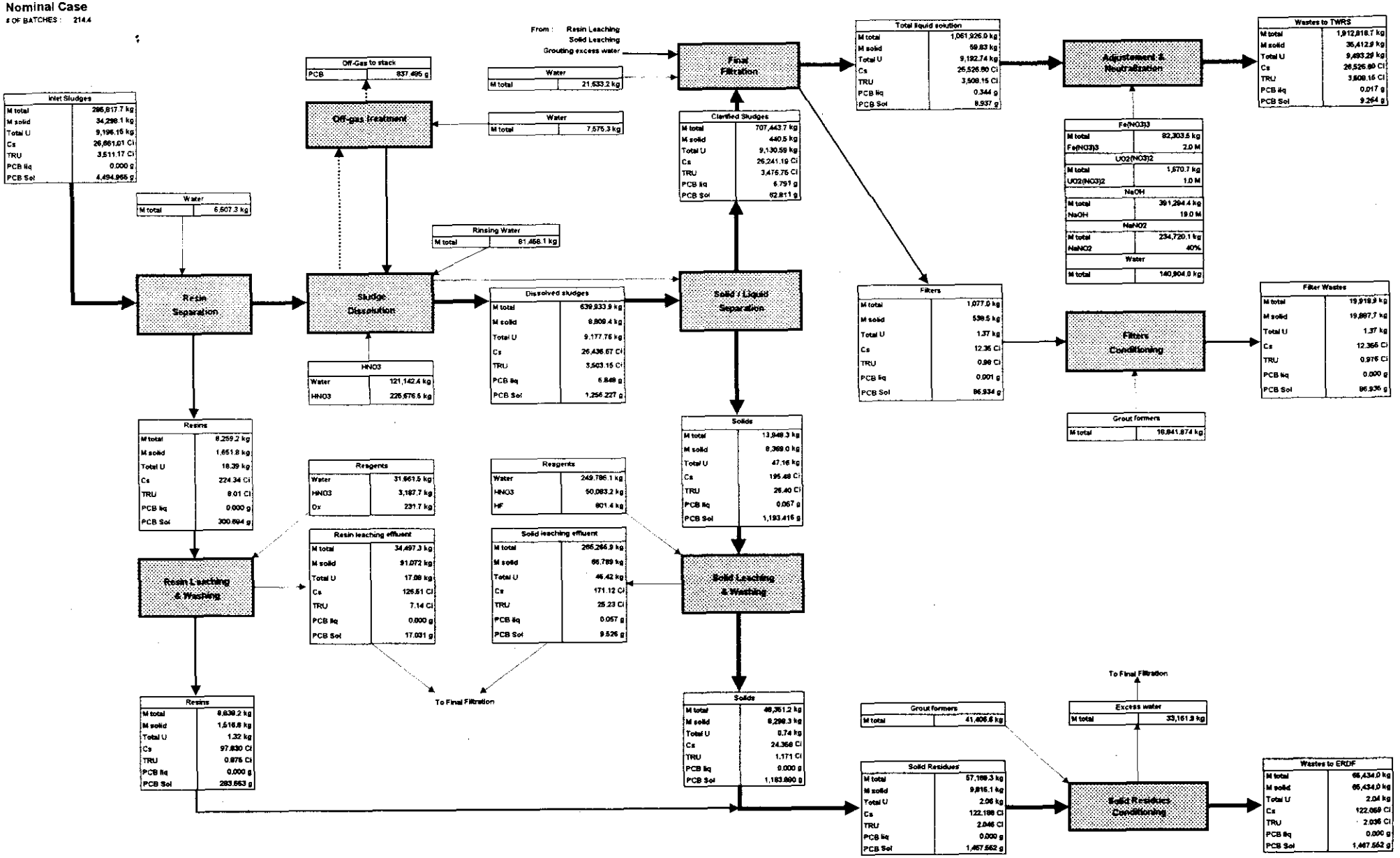

SLUDGE TREATMENT
CONCENTRATION

TOTAL STREAMS
Nominal Case

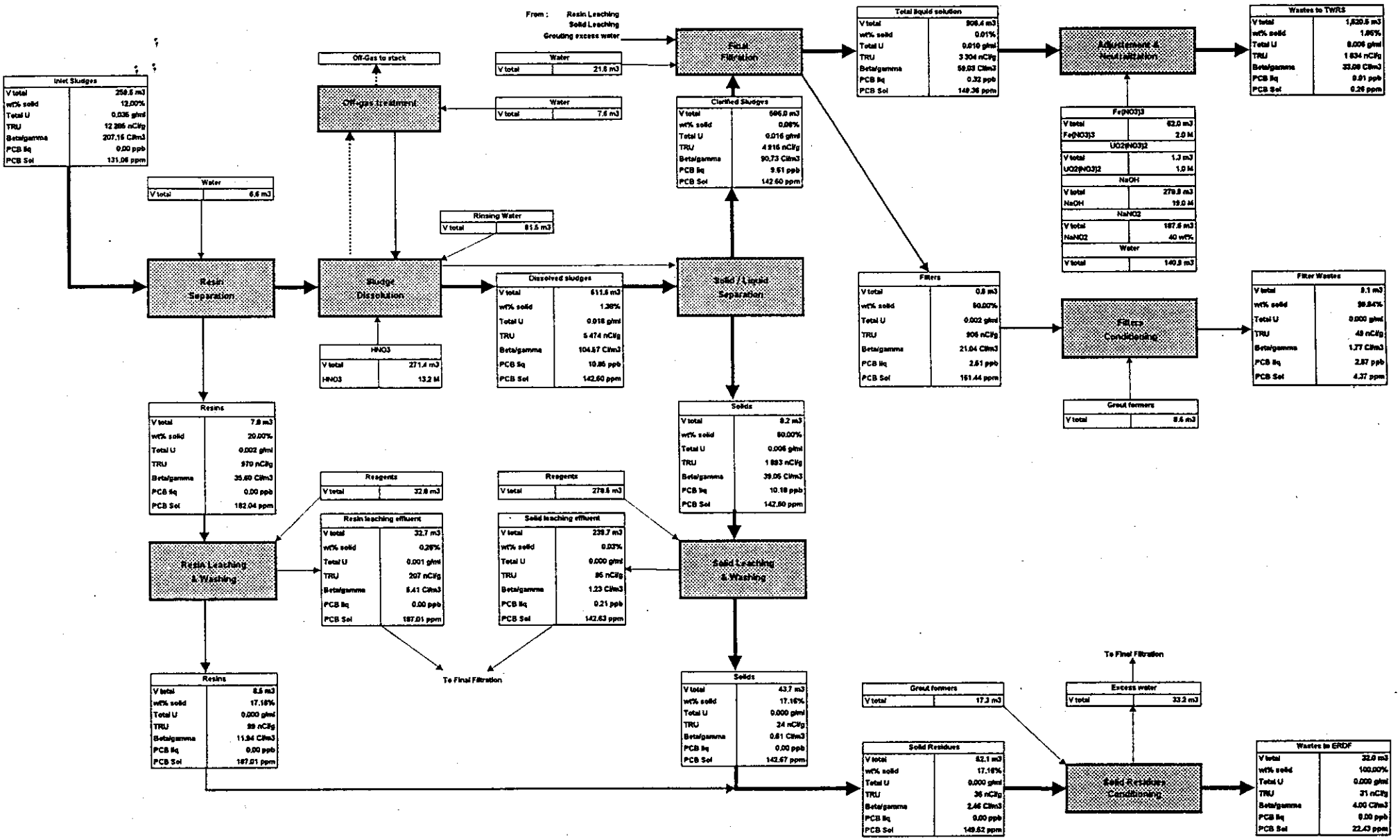

Requirements

TOTAL STREAMS Nominal Case	Requirements		Obtained results
Effluent sent to TWRS	**TWRS Requirements**		
PCB in liq	< 0.5 ppb		0.01 ppb
PCB in sol	< 2 ppm		0.262 ppm
Concentration	< 40 g/l		21.85 g/l
Na(NO3) concentration			3.20 M
NaOH Concentration	Req on [OH-] : 0.30 M		0.30 M
NaOH + Na(NO2) Concentration	Req on [OH-]+[NO2-] : 1.20 M		1.20 M
Na(NO2) concentration	Req on [NO2-] : none		0.90 M
Volume generated m3			**1,620 m3**
Grout Wastes sent to ERDF	**ERDF Requirements**		
PCB (ppm)			22.428 ppm
U g/ml	< 0.026 g/ml		0.0001 g/ml
Pu(Total)	Ci/m3		0.035 Ci/m3
238 Pu	< 1.5 Ci/m3		0.007 Ci/m3
239 Pu	< 0.029 Ci/m3		0.014 Ci/m3
240 Pu	< 0.029 Ci/m3		0.014 Ci/m3
Am	< 0.05 Ci/m3		0.029 Ci/m3
TRU	< 100 nanoCi/g		31 nCi/g
Volume generated m3			32.0 m3
Number of 4.8 m3 drums			**6.7**
Filters : Grouted sent to ERDF or sent as-is to WIP	**ERDF Requirements**	**WIPP Requirements**	
PCB (ppm)		< 2 ppm	
U g/ml	< 0.026 g/ml		
Pu(Total)	Ci/m3		
238 Pu	< 1.5 Ci/m3		
239 Pu	< 0.029 Ci/m3		
240 Pu	< 0.029 Ci/m3		
Am	< 0.05 Ci/m3		
TRU	< 100 nanoCi/g	> 100 nanoCi/g	
Volume generated m3			9.7 m3
Number of 0.2 m3 drums			**48.4**

DETAILED STREAM DATA SHEET

TOTAL STREAMS Nominal Case	ST-101 SLUDGE AT INLET OF TREATMENT UNIT	ST-102 WATER ADDITION FOR SCREEN WASHING	ST-103 SLUDGE STREAM FROM RESIN SEPARATION	ST-104 RESIN STREAM FROM RESIN SEPARATION	ST-201 SLUDGE TO DISSOLVER	ST-202 RECYCLED NITRIC ACID	ST-203 HNO3 FOR DISSOLUTION	ST-204 DISSOLUTION OFF-GAS	ST-205 DISSOLUTION SOLUTION
Volume	*259.582 m3*	*6.607 m3*	*258.863 m3*	*7.824 m3*	*258.863 m3*	*10.141 m3*	*271.376 m3*	*1328.708 m3*	*511.562 m3*
Density	*1.101*	*1.000*	*1.098*	*1.056*	*1.098*	*1.125*	*1.278*	*0.002*	*1.251*
Total Mass	285,817.744 kg	6,607.342 kg	284,165.908 kg	8,259.178 kg	284,165.908 kg	11,408.543 kg	346,818.894 kg	2,314.094 kg	639,933.899 kg
Number of packages									
LIQUID									
Volume	*251.520 m3*	*6.607 m3*	*251.520 m3*	*6.607 m3*	*251.520 m3*	*10.141 m3*	*271.376 m3*	*1328.708 m3*	*507.631 m3*
Density	*1.000*	*1.000*	*1.000*	*1.000*	*1.000*	*1.125*	*1.278*	*0.002*	*1.243*
Total Mass Liquid + Gaz	251,519.615 kg	6,607.342 kg	251,519.615 kg	6,607.342 kg	251,519.615 kg	11,408.543 kg	346,818.894 kg	2,314.094 kg	631,124.455 kg
H2O	251,519.615 kg	6,607.342 kg	251,519.615 kg	6,607.342 kg	251,519.615 kg	7,575.273 kg	121,142.374 kg		386,668.989 kg
HNO3						3,833.270 kg	225,676.520 kg		193,418.192 kg
H2C2O4									
HF									
NaOH									
Al(NO3)3									9,950.062 kg
AlF3									
Fe(NO3)3									23,766.581 kg
CaO									275.916 kg
NaNO2									
NaNO3									
Miscellaneous									1,858.878 kg
UO2(NO3)2									15,185.836 kg
Pu									*1,717.131 Ci*
Am									*1,775.467 Ci*
Cs									*26,356.483 Ci*
Sr									*27,042.783 Ci*
PCB									*6.848 g*
GAZ									
NO2								1,405.090 kg	
NO								909.004 kg	
PCB								*837.485 g*	
SOLIDS + RESINS									
Volume	*8.063 m3*		*7.343 m3*	*1.217 m3*	*7.343 m3*				*3.931 m3*
Density	*5.621*		*5.833*	*1.428*	*5.833*				*2.292*
Total Mass Solids + Resins	34,298.129 kg		32,646.294 kg	1,651.836 kg	32,646.294 kg				8,809.444 kg
Wt% solids	*12.00 wt%*	*0.00 wt%*	*11.49 wt%*	*20.00 wt%*	*11.49 wt%*	*0.00 wt%*	*0.00 wt%*	*0.00 wt%*	*1.38 wt%*
Al(NO3)3									
Al(OH)3	1,009.772 kg		1,007.752 kg	2.020 kg	1,007.752 kg				10.078 kg
Al2O3	1,824.790 kg		1,821.140 kg	3.650 kg	1,821.140 kg				91.057 kg
Fe(NO3)3									
FeOOH	8,837.152 kg		8,819.477 kg	17.674 kg	8,819.477 kg				88.195 kg
C	35.608 kg		35.537 kg	0.071 kg	35.537 kg				35.537 kg
CaO	307.188 kg		306.573 kg	0.614 kg	306.573 kg				30.657 kg
Na2C2O4									
CO2	230.483 kg		230.022 kg	0.461 kg	230.022 kg				
H2O									
SiO2	7,879.846 kg		7,864.086 kg	15.760 kg	7,864.086 kg				7,864.086 kg
Grout									
Miscellaneous	1,881.418 kg		1,877.655 kg	3.763 kg	1,877.655 kg				18.777 kg
Zircaloy	206.643 kg		206.230 kg	0.413 kg	206.230 kg				206.230 kg
Grafoil	55.643 kg		27.821 kg	27.821 kg	27.821 kg				27.821 kg
HNO3									
H2C2O4									
Na2U2O7									
U	3,093.976 kg		3,087.789 kg	6.188 kg	3,087.789 kg				1.544 kg
U3O7	2,413.317 kg		2,408.491 kg	4.827 kg	2,408.491 kg				1.204 kg
UH3	325.714 kg		325.063 kg	0.651 kg	325.063 kg				0.163 kg
UO2	4,155.039 kg		4,146.729 kg	8.310 kg	4,146.729 kg				2.073 kg
UO2(NO3)2									
UO4-4H2O	50.031 kg		49.931 kg	0.100 kg	49.931 kg				0.025 kg
Pu	*1,729.016 Ci*		*1,725.558 Ci*	*3.458 Ci*	*1,725.558 Ci*				*5.177 Ci*
Am	*1,781.104 Ci*		*1,777.541 Ci*	*3.562 Ci*	*1,777.541 Ci*				*1.778 Ci*
Cs	*26,480.609 Ci*		*26,427.648 Ci*	*52.961 Ci*	*26,427.648 Ci*				*79.283 Ci*
Sr	*27,110.532 Ci*		*27,056.311 Ci*	*54.221 Ci*	*27,056.311 Ci*				*13.528 Ci*
PCB	*4,494.965 g*		*4,194.271 g*	*300.694 g*	*4,194.271 g*				*1,256.227 g*
RESINS									
Zeolite	738.716 kg		369.358 kg	369.358 kg	369.358 kg				369.358 kg
OIER	1,252.794 kg		62.640 kg	1,190.154 kg	62.640 kg				62.640 kg
Pu	*0.582 Ci*		*0.029 Ci*	*0.553 Ci*	*0.029 Ci*				*3.279 Ci*
Am	*0.464 Ci*		*0.023 Ci*	*0.440 Ci*	*0.023 Ci*				*0.320 Ci*
Cs	*180.402 Ci*		*9.020 Ci*	*171.382 Ci*	*9.020 Ci*				*0.902 Ci*
TOTAL ACTIVITIES									
Total U	9,196.151 kg		9,177.759 kg	18.392 kg	9,177.759 kg				9,177.759 kg
Total Pu	1 729.598 Ci		1 725.587 Ci	4.011 Ci	1 725.587 Ci				1 725.587 Ci
Total Am	1 781.567 Ci		1 777.565 Ci	4.003 Ci	1 777.565 Ci				1 777.565 Ci
TRU	3 511.165 Ci		3 503.151 Ci	8.014 Ci	3 503.151 Ci				3 503.151 Ci
Total Cs	26 661.011 Ci		26 436.668 Ci	224.343 Ci	26 436.668 Ci				26 436.668 Ci
Total Sr	27 110.532 Ci		27 056.311 Ci	54.221 Ci	27 056.311 Ci				27 056.311 Ci
Beta Gamma	53 771.543 Ci		53 492.979 Ci	278.564 Ci	53 492.979 Ci				53 492.979 Ci
CONCENTRATION									
PCB in liquid									10.85 ppb
PCB in solids	131.056 ppm		128.476 ppm	182.036 ppm	128.476 ppm				142.600 ppm
Solids	132.13 g/l		126.11 g/l	211.11 g/l	126.11 g/l				17.22 g/l
U	0.035 g/cm3		0.035 g/cm3	0.002 g/cm3	0.035 g/cm3				0.018 g/cm3
Pu total	6.663 Ci/m3		6.666 Ci/m3	0.513 Ci/m3	6.666 Ci/m3				3.373 Ci/m3
238 Pu	1.333 Ci/m3		1.333 Ci/m3	0.103 Ci/m3	1.333 Ci/m3				0.675 Ci/m3
239 Pu	2.665 Ci/m3		2.666 Ci/m3	0.205 Ci/m3	2.666 Ci/m3				1.349 Ci/m3
240 Pu	2.665 Ci/m3		2.666 Ci/m3	0.205 Ci/m3	2.666 Ci/m3				1.349 Ci/m3
Am	6.863 Ci/m3		6.867 Ci/m3	0.512 Ci/m3	6.867 Ci/m3				3.475 Ci/m3
TRU	13.526 Ci/m3		13.533 Ci/m3	1.024 Ci/m3	13.533 Ci/m3				6.848 Ci/m3
TRU	12 285 nCi/g		12 328 nCi/g	970 nCi/g	12 328 nCi/g				5 474 nCi/g
Beta Gamma	207.146 Ci/m3		206.646 Ci/m3	35.602 Ci/m3	206.646 Ci/m3				104.568 Ci/m3

DETAILED STREAM DATA SHEET

TOTAL STREAMS Nominal Case	ST-206 DISSOLVER WASHING WATER	ST-301 RESIN STREAM TO LEACHING	ST-302 TOTAL REAGENTS FOR RESINS AND SOLIDS LEACHING	ST-303 TOTAL OXALIC USED FOR RESIN LEACHING AND WASHING	ST-304 TOTAL HF USED FOR SOLIDS LEACHING AND WASHING	ST-305 TOTAL HNO3 USED FOR RESINS AND SOLIDS LEACHING	ST-306 TOTAL HNO3 USED FOR RESIN LEACHING AND WASHING	ST-307 TOTAL HNO3 USED FOR SOLIDS LEACHING AND WASHING	ST-308 TOTAL CLARIFIED SOLUTION FROM RESIN LEACHING
Volume	*81.458 m3*	*7.824 m3*	*149.311 m3*	*12.477 m3*	*72.777 m3*	*64.058 m3*	*3.833 m3*	*60.225 m3*	*32.710 m3*
Density	*1.000*	*1.056*	*1.164*	*1.100*	*1.075*	*1.278*	*1.278*	*1.278*	*1.055*
Total Mass	**81,458.057 kg**	**8,259.178 kg**	**173,825.467 kg**	**13,724.169 kg**	**78,234.830 kg**	**81,866.469 kg**	**4,898.785 kg**	**76,967.683 kg**	**34,497.319 kg**
Number of packages									
LIQUID									
Volume	*81.458 m3*	*6.607 m3*	*149.311 m3*	*12.477 m3*	*72.777 m3*	*64.058 m3*	*3.833 m3*	*60.225 m3*	*32.639 m3*
Density	*1.000*	*1.000*	*1.164*	*1.100*	*1.075*	*1.278*	*1.278*	*1.278*	*1.054*
Total Mass Liquid + Gaz	**81,458.057 kg**	**6,607.342 kg**	**173,825.467 kg**	**13,724.169 kg**	**78,234.830 kg**	**81,866.469 kg**	**4,898.785 kg**	**76,967.683 kg**	**34,406.247 kg**
H2O	81,458.057 kg	6,607.342 kg	119,521.546 kg	13,492.473 kg	77,433.461 kg	28,595.612 kg	1,711.125 kg	26,884.487 kg	30,963.224 kg
HNO3			53,270.857 kg			53,270.857 kg	3,187.660 kg	50,083.197 kg	3,117.654 kg
H2C2O4			231.696 kg	231.696 kg					231.439 kg
HF			801.368 kg		801.368 kg				
NaOH									
Al(NO3)3									18.663 kg
AlF3									
Fe(NO3)3									43.252 kg
CaO									0.491 kg
NaNO2									
NaNO3									
Miscellaneous									3.383 kg
UO2(NO3)2									28.141 kg
Pu									*3.862 Ci*
Am									*3.225 Ci*
Cs									*120.648 Ci*
Sr									*50.116 Ci*
PCB									
GAZ									
NO2									
NO									
PCB									
SOLIDS + RESINS									
Volume		*1.217 m3*							*0.072 m3*
Density		*1.428*							*1.271*
Total Mass Solids + Resins		**1,651.836 kg**							**91.072 kg**
Wt% solids	*0.00 wt%*	*20.00 wt%*	*0.00 wt%*	*0.00 wt%*	*0.00 wt%*	*0.00 wt%*	*0.00 wt%*	*0.00 wt%*	*0.26 wt%*
Al(NO3)3									
Al(OH)3		2.020 kg							0.011 kg
Al2O3		3.650 kg							0.021 kg
Fe(NO3)3									
FeOOH		17.674 kg							0.100 kg
C		0.071 kg							0.004 kg
CaO		0.614 kg							0.007 kg
Na2C2O4									
CO2		0.461 kg							
H2O									
SiO2		15.760 kg							0.893 kg
Grout									
Miscellaneous		3.763 kg							0.021 kg
Zircaloy		0.413 kg							0.023 kg
Grafoil		27.821 kg							1.576 kg
HNO3									
H2C2O4									
Na2U2O7									
U		6.188 kg							0.026 kg
U3O7		4.827 kg							0.021 kg
UH3		0.651 kg							0.003 kg
UO2		8.310 kg							0.035 kg
UO2(NO3)2									
UO4-4H2O		0.100 kg							0.000 kg
Pu		*3.458 Ci*							*0.004 Ci*
Am		*3.562 Ci*							*0.035 Ci*
Cs		*52.961 Ci*							*1.401 Ci*
Sr		*54.221 Ci*							*0.230 Ci*
PCB		*300.694 g*							*17.031 g*
RESINS									
Zeolite		369.358 kg							20.920 kg
OIER		1,190.154 kg							67.410 kg
Pu		*0.553 Ci*							*0.004 Ci*
Am		*0.440 Ci*							*0.009 Ci*
Cs		*171.382 Ci*							*4.465 Ci*
TOTAL ACTIVITIES									
Total U		18.392 kg							17.077 kg
Total Pu		4.011 Ci							3.870 Ci
Total Am		4.003 Ci							3.269 Ci
TRU		**8.014 Ci**							**7.139 Ci**
Total Cs		224.343 Ci							126.514 Ci
Total Sr		54.221 Ci							50.347 Ci
Beta Gamma		**278.564 Ci**							**176.860 Ci**
CONCENTRATION									
PCB in liquid									
PCB in solids		182.036 ppm							187.008 ppm
Solids		211.11 g/l							2.78 g/l
U		0.002 g/cm3							0.001 g/cm3
Pu total		**0.513 Ci/m3**							**0.118 Ci/m3**
238 Pu		0.103 Ci/m3							0.024 Ci/m3
239 Pu		0.205 Ci/m3							0.047 Ci/m3
240 Pu		0.205 Ci/m3							0.047 Ci/m3
Am		0.512 Ci/m3							0.100 Ci/m3
TRU		1.024 Ci/m3							0.218 Ci/m3
TRU		970 nCi/g							207 nCi/g
Beta Gamma		35.602 Ci/m3							5.407 Ci/m3

DETAILED STREAM DATA SHEET

TOTAL STREAMS Nominal Case	ST-309 TOTAL SOLIDS LEACHING EFFLUENT	ST-310 LEACHED RESINS	ST-311 LEACHED SOLIDS	ST-401 TOTAL WATER USED FOR RESINS AND SOLIDS WASHING	ST-402 TOTAL SOLUTION FROM CENTRIFUGE	ST-403 RESINS + SOLID RESIDUES FROM LEACHING	ST-404 FINAL DECLOGGING (SOLIDS)	ST-405 FINAL DECLOGGING (RESIN)	ST-407 DISSOLUTION SOLUTION AFTER CENTRIFUGE
Volume	*239.651 m3*	*24.778 m3*	*166.555 m3*	*161.926 m3*	*860.341 m3*	*52.077 m3*	*43.692 m3*	*8.518 m3*	*586.035 m3*
Density	*1.111*	*1.085*	*1.182*	*1.000*	*1.172*	*1.098*	*1.107*	*1.038*	*1.207*
Total Mass	266,266.885 kg	26,877.537 kg	196,809.516 kg	161,926.047 kg	1,008,207.874 kg	57,189.304 kg	48,351.152 kg	8,838.152 kg	707,443.669 kg
Number of packages									
LIQUID									
Volume	*239.621 m3*	*23.510 m3*	*162.836 m3*	*161.926 m3*	*860.055 m3*	*47.374 m3*	*39.984 m3*	*7.321 m3*	*586.838 m3*
Density	*1.111*	*1.075*	*1.158*	*1.000*	*1.172*	*1.000*	*1.002*	*1.000*	*1.207*
Total Mass Liquid + Gaz	266,200.096 kg	25,269.620 kg	188,486.319 kg	161,926.047 kg	1,007,609.540 kg	47,374.206 kg	40,052.899 kg	7,321.307 kg	707,003.197 kg
H2O	213,205.448 kg	21,822.770 kg	137,242.468 kg	161,926.047 kg	708,865.785 kg	47,328.531 kg	40,011.050 kg	7,317.481 kg	464,697.113 kg
HNO3	51,755.572 kg	3,121.131 kg	50,364.746 kg		246,574.501 kg	44.608 kg	41.131 kg	3.477 kg	191,701.275 kg
H2C2O4		231.696 kg			231.439 kg	0.258 kg		0.258 kg	
HF	800.714 kg		801.368 kg		800.714 kg	0.654 kg	0.654 kg		
NaOH									
Al(NO3)3	92.314 kg	18.682 kg	15.324 kg		9,966.713 kg	0.031 kg	0.013 kg	0.018 kg	9,857.736 kg
AlF3									
Fe(NO3)3	248.498 kg	43.299 kg	41.249 kg		23,809.799 kg	0.080 kg	0.034 kg	0.046 kg	23,518.049 kg
CaO	3.106 kg	0.492 kg	0.516 kg		276.407 kg	0.001 kg	0.000 kg	0.001 kg	272.809 kg
NaNO2									
NaNO3									
Miscellaneous	17.635 kg	3.387 kg	2.927 kg		1,862.259 kg	0.006 kg	0.002 kg	0.003 kg	1,841.241 kg
UO2(NO3)2	76.808 kg	28.164 kg	17.721 kg		15,219.924 kg	0.037 kg	0.014 kg	0.023 kg	15,114.975 kg
Pu	*14.552 Ci*	*3.865 Ci*	*8.272 Ci*		*1,728.007 Ci*	*0.010 Ci*	*0.007 Ci*	*0.003 Ci*	*1,709.593 Ci*
Am	*10.621 Ci*	*3.228 Ci*	*3.256 Ci*		*1,780.479 Ci*	*0.005 Ci*	*0.003 Ci*	*0.003 Ci*	*1,766.633 Ci*
Cs	*170.671 Ci*	*120.775 Ci*	*71.223 Ci*		*26,528.494 Ci*	*0.185 Ci*	*0.058 Ci*	*0.127 Ci*	*26,237.176 Ci*
Sr	*123.522 Ci*	*50.154 Ci*	*29.357 Ci*		*27,103.489 Ci*	*0.062 Ci*	*0.024 Ci*	*0.038 Ci*	*26,929.850 Ci*
PCB	*0.057 g*		*0.009 g*		*6.848 g*	*0.000 g*	*0.000 g*		*6.791 g*
GAZ									
NO2									
NO									
PCB									
SOLIDS + RESINS									
Volume	*0.030 m3*	*1.268 m3*	*3.719 m3*		*0.286 m3*	*4.703 m3*	*3.708 m3*	*1.196 m3*	*0.197 m3*
Density	*2.290*	*1.271*	*2.287*		*2.136*	*2.130*	*2.287*	*1.271*	*2.292*
Total Mass Solids + Resins	66.789 kg	1,607.917 kg	8,323.197 kg		598.333 kg	9,815.098 kg	8,298.253 kg	1,516.845 kg	440.472 kg
Wt% solids	*0.03 wt%*	*5.98 wt%*	*4.23 wt%*	*0.00 wt%*	*0.06 wt%*	*17.16 wt%*	*17.16 wt%*	*17.16 wt%*	*0.06 wt%*
Al(NO3)3									
Al(OH)3	0.076 kg	0.202 kg	9.526 kg		0.592 kg	9.688 kg	9.497 kg	0.191 kg	0.504 kg
Al2O3	0.690 kg	0.365 kg	86.072 kg		5.264 kg	86.158 kg	85.814 kg	0.344 kg	4.553 kg
Fe(NO3)3									
FeOOH	0.669 kg	1.767 kg	83.366 kg		5.179 kg	84.784 kg	83.116 kg	1.667 kg	4.410 kg
C	0.269 kg	0.071 kg	33.591 kg		2.050 kg	33.558 kg	33.491 kg	0.067 kg	1.777 kg
CaO	0.232 kg	0.123 kg	28.979 kg		1.772 kg	29.008 kg	28.892 kg	0.116 kg	1.533 kg
Na2C2O4									
CO2									
H2O									
SiO2	59.633 kg	15.760 kg	7,433.527 kg		453.730 kg	7,426.116 kg	7,411.249 kg	14.867 kg	393.204 kg
Grout									
Miscellaneous	0.142 kg	0.376 kg	17.749 kg		1.103 kg	18.050 kg	17.695 kg	0.355 kg	0.939 kg
Zircaloy	1.564 kg	0.413 kg	194.939 kg		11.899 kg	194.744 kg	194.354 kg	0.390 kg	10.311 kg
Grafoil	0.211 kg	27.821 kg	26.298 kg		3.178 kg	52.465 kg	26.219 kg	26.246 kg	1.391 kg
HNO3									
H2C2O4									
Na2U2O7									
U	0.008 kg	0.464 kg	0.248 kg		0.112 kg	0.685 kg	0.247 kg	0.438 kg	0.077 kg
U3O7	0.006 kg	0.362 kg	0.194 kg		0.087 kg	0.534 kg	0.193 kg	0.341 kg	0.060 kg
UH3	0.001 kg	0.049 kg	0.026 kg		0.012 kg	0.072 kg	0.026 kg	0.046 kg	0.008 kg
UO2	0.011 kg	0.623 kg	0.333 kg		0.150 kg	0.920 kg	0.332 kg	0.588 kg	0.104 kg
UO2(NO3)2									
UO4-4H2O	0.000 kg	0.008 kg	0.004 kg		0.002 kg	0.011 kg	0.004 kg	0.007 kg	0.001 kg
Pu	*0.026 Ci*	*0.069 Ci*	*0.538 Ci*		*0.289 Ci*	*0.602 Ci*	*0.537 Ci*	*0.065 Ci*	*0.259 Ci*
Am	*0.009 Ci*	*0.616 Ci*	*0.084 Ci*		*0.132 Ci*	*0.665 Ci*	*0.084 Ci*	*0.581 Ci*	*0.089 Ci*
Cs	*0.448 Ci*	*24.733 Ci*	*23.982 Ci*		*5.813 Ci*	*47.242 Ci*	*23.910 Ci*	*23.332 Ci*	*3.964 Ci*
Sr	*0.071 Ci*	*4.067 Ci*	*2.174 Ci*		*0.978 Ci*	*6.004 Ci*	*2.167 Ci*	*3.836 Ci*	*0.676 Ci*
PCB	*9.526 g*	*300.694 g*	*1,187.449 g*		*89.368 g*	*1,467.552 g*	*1,183.890 g*	*283.663 g*	*62.811 g*
RESINS									
Zeolite	2.801 kg	369.358 kg	349.136 kg		42.189 kg	696.527 kg	348.090 kg	348.438 kg	18.468 kg
OIER	0.475 kg	1,190.154 kg	59.210 kg		71.017 kg	1,181.777 kg	59.033 kg	1,122.744 kg	3.132 kg
Pu	*0.017 Ci*	*0.077 Ci*	*0.434 Ci*		*0.185 Ci*	*0.506 Ci*	*0.433 Ci*	*0.073 Ci*	*0.164 Ci*
Am	*0.002 Ci*	*0.159 Ci*	*0.109 Ci*		*0.027 Ci*	*0.258 Ci*	*0.109 Ci*	*0.150 Ci*	*0.016 Ci*
Cs	*0.005 Ci*	*78.836 Ci*	*0.392 Ci*		*4.516 Ci*	*74.762 Ci*	*0.391 Ci*	*74.371 Ci*	*0.045 Ci*
TOTAL ACTIVITIES									
Total U	46.420 kg	18.392 kg	11.442 kg		9,194.092 kg	2.059 kg	0.744 kg	1.315 kg	9,130.595 kg
Total Pu	14.595 Ci	4.011 Ci	9.244 Ci		1 728.481 Ci	1.117 Ci	0.976 Ci	0.141 Ci	1 710.016 Ci
Total Am	10.632 Ci	4.003 Ci	3.449 Ci		1 780.638 Ci	0.929 Ci	0.195 Ci	0.734 Ci	1 766.737 Ci
TRU	25.227 Ci	8.014 Ci	12.693 Ci		3 509.119 Ci	2.046 Ci	1.171 Ci	0.875 Ci	3 476.753 Ci
Total Cs	171.124 Ci	224.343 Ci	95.596 Ci		26 538.823 Ci	122.188 Ci	24.358 Ci	97.830 Ci	26 241.185 Ci
Total Sr	123.593 Ci	54.221 Ci	31.531 Ci		27 104.467 Ci	6.066 Ci	2.191 Ci	3.874 Ci	26 930.527 Ci
Beta Gamma	294.718 Ci	278.564 Ci	127.128 Ci		53 643.290 Ci	128.254 Ci	26.550 Ci	101.704 Ci	53 171.712 Ci
CONCENTRATION									
PCB in liquid	0.21 ppb		0.05 ppb		6.80 ppb	0.00 ppb	0.00 ppb		9.61 ppb
PCB in solids	142.625 ppm	187.008 ppm	142.667 ppm		149.362 ppm	149.520 ppm	142.667 ppm	187.008 ppm	142.600 ppm
Solids	0.28 g/l	64.89 g/l	49.97 g/l		0.70 g/l	188.47 g/l	189.93 g/l	178.09 g/l	0.75 g/l
U	0.000 g/cm3	0.001 g/cm3	0.000 g/cm3		0.011 g/cm3	0.000 g/cm3	0.000 g/cm3	0.000 g/cm3	0.016 g/cm3
Pu total	0.061 Ci/m3	0.162 Ci/m3	0.055 Ci/m3		2.009 Ci/m3	0.021 Ci/m3	0.022 Ci/m3	0.017 Ci/m3	2.918 Ci/m3
238 Pu	0.012 Ci/m3	0.032 Ci/m3	0.011 Ci/m3		0.402 Ci/m3	0.004 Ci/m3	0.004 Ci/m3	0.003 Ci/m3	0.584 Ci/m3
239 Pu	0.024 Ci/m3	0.065 Ci/m3	0.022 Ci/m3		0.804 Ci/m3	0.009 Ci/m3	0.009 Ci/m3	0.007 Ci/m3	1.167 Ci/m3
240 Pu	0.024 Ci/m3	0.065 Ci/m3	0.022 Ci/m3		0.804 Ci/m3	0.009 Ci/m3	0.009 Ci/m3	0.007 Ci/m3	1.167 Ci/m3
Am	0.044 Ci/m3	0.162 Ci/m3	0.021 Ci/m3		2.070 Ci/m3	0.018 Ci/m3	0.004 Ci/m3	0.086 Ci/m3	3.015 Ci/m3
TRU	0.105 Ci/m3	0.323 Ci/m3	0.076 Ci/m3		4.079 Ci/m3	0.039 Ci/m3	0.027 Ci/m3	0.103 Ci/m3	5.933 Ci/m3
TRU	95 nCi/g	298 nCi/g	64 nCi/g		3 481 nCi/g	36 nCi/g	24 nCi/g	99 nCi/g	4 915 nCi/g
Beta Gamma	1.230 Ci/m3	11.242 Ci/m3	0.763 Ci/m3		62.351 Ci/m3	2.463 Ci/m3	0.608 Ci/m3	11.941 Ci/m3	90.731 Ci/m3

DETAILED STREAM DATA SHEET

TOTAL STREAMS Nominal Case	ST-408	ST-409	ST-410	ST-501	ST-502	ST-503	ST-504	ST-505	ST-506
	TOTAL WATER USED FOR RESIN LEACHING AND WASHING	TOTAL WATER FOR SOLIDS LEACHING AND WASHING	SOLIDS FROM CENTRIFUGE	TOTAL SOLUTION TO FILTRATION	FILTER RINSING WATER	TOTAL SOLUTION TO ADJUST	RINSED FILTER TO CONDITIONING	GROUT FORMERS FOR FILTER CONDITIONING	CONDITIONED FILTERS
Volume	*16.458 m3*	*145.468 m3*	*36.780 m3*	*893.445 m3*	*21.633 m3*	*908.435 m3*	*0.766 m3*	*8.584 m3*	*9.088 m3*
Density	*1.000*	*1.000*	*1.131*	*1.166*	*1.000*	*1.169*	*1.406*	*2.195*	*2.192*
Total Mass	16,457.934 kg	145,468.112 kg	41,607.878 kg	1,041,369.818 kg	21,633.174 kg	1,061,925.991 kg	1,077.000 kg	18,841.874 kg	19,918.874 kg
Number of packages							48.378		48.378
LIQUID									
Volume	*16.458 m3*	*145.468 m3*	*33.064 m3*	*893.159 m3*	*21.633 m3*	*908.406 m3*	*0.509 m3*		*0.029 m3*
Density	*1.000*	*1.000*	*1.007*	*1.166*	*1.000*	*1.170*	*1.059*		*1.080*
Total Mass Liquid + Gaz	16,457.934 kg	145,468.112 kg	33,280.751 kg	1,040,771.484 kg	21,633.174 kg	1,061,866.158 kg	538.500 kg		31.183 kg
H2O	16,457.934 kg	145,468.112 kg	32,924.015 kg	741,995.757 kg	21,633.174 kg	763,152.545 kg	476.386 kg		27.074 kg
HNO3			284.960 kg	246,605.726 kg		246,553.847 kg	51.879 kg		3.270 kg
H2C2O4				231.619 kg		231.564 kg	0.055 kg		0.001 kg
HF				801.172 kg		800.972 kg	0.200 kg		0.003 kg
NaOH									
Al(NO3)3			15.324 kg	9,968.735 kg		9,966.639 kg	2.095 kg		0.101 kg
AlF3									
Fe(NO3)3			41.249 kg	23,809.855 kg		23,804.210 kg	5.645 kg		0.071 kg
CaO			0.516 kg	276.407 kg		276.338 kg	0.069 kg		0.000 kg
NaNO2									
NaNO3									
Miscellaneous			2.927 kg	1,862.263 kg		1,861.857 kg	0.406 kg		0.011 kg
UO2(NO3)2			11.761 kg	15,219.950 kg		15,218.184 kg	1.766 kg		0.652 kg
Pu			*1.251 Ci*	*1,728.013 Ci*		*1,727.825 Ci*	*0.188 Ci*		*0.073 Ci*
Am			*1.466 Ci*	*1,780.483 Ci*		*1,780.265 Ci*	*0.218 Ci*		*0.071 Ci*
Cs			*19.802 Ci*	*26,528.623 Ci*		*26,525.565 Ci*	*3.058 Ci*		*1.239 Ci*
Sr			*18.744 Ci*	*27,103.532 Ci*		*27,100.649 Ci*	*2.883 Ci*		*1.212 Ci*
PCB			*0.009 g*	*6.848 g*		*0.344 g*	*0.001 g*		*0.000 g*
GAZ									
NO2									
NO									
PCB									
SOLIDS + RESINS									
Volume			*3.716 m3*	*0.286 m3*		*0.029 m3*	*0.257 m3*	*8.584 m3*	*9.059 m3*
Density			*2.292*	*2.136*		*2.136*	*2.136*	*2.195*	*2.196*
Total Mass Solids + Resins			8,327.127 kg	598.333 kg		59.833 kg	538.500 kg	18,841.874 kg	19,887.691 kg
Wt% solids	*0.00 wt%*	*0.00 wt%*	*20.01 wt%*	*0.06 wt%*	*0.00 wt%*	*0.01 wt%*	*50.00 wt%*	*100.00 wt%*	*99.84 wt%*
Al(NO3)3									1.995 kg
Al(OH)3			9.526 kg	0.592 kg		0.059 kg	0.533 kg		0.533 kg
Al2O3			86.072 kg	5.264 kg		0.526 kg	4.738 kg		4.738 kg
Fe(NO3)3									5.574 kg
FeOOH			83.366 kg	5.179 kg		0.518 kg	4.661 kg		4.661 kg
C			33.591 kg	2.050 kg		0.205 kg	1.845 kg		1.845 kg
CaO			28.979 kg	1.772 kg		0.177 kg	1.595 kg		1.664 kg
Na2C2O4									
CO2									
H2O								2,757.347 kg	2,757.347 kg
SiO2			7,433.527 kg	453.730 kg		45.373 kg	408.357 kg		408.357 kg
Grout								16,084.527 kg	16,533.638 kg
Miscellaneous			17.749 kg	1.103 kg		0.110 kg	0.992 kg		1.584 kg
Zircaloy			194.939 kg	11.899 kg		1.190 kg	10.709 kg		10.709 kg
Grafoil			26.298 kg	3.178 kg		0.318 kg	2.860 kg		2.860 kg
HNO3									48.609 kg
H2C2O4									0.054 kg
Na2U2O7									
U			1.459 kg	0.112 kg		0.011 kg	0.100 kg		0.100 kg
U3O7			1.138 kg	0.087 kg		0.009 kg	0.078 kg		0.078 kg
UH3			0.154 kg	0.012 kg		0.001 kg	0.011 kg		0.011 kg
UO2			1.960 kg	0.150 kg		0.015 kg	0.135 kg		0.135 kg
UO2(NO3)2									1.113 kg
UO4-4H2O			0.024 kg	0.002 kg		0.000 kg	0.002 kg		0.002 kg
Pu			*4.893 Ci*	*0.289 Ci*		*0.029 Ci*	*0.260 Ci*		*0.375 Ci*
Am			*1.680 Ci*	*0.132 Ci*		*0.013 Ci*	*0.119 Ci*		*0.266 Ci*
Cs			*74.942 Ci*	*5.813 Ci*		*0.581 Ci*	*5.232 Ci*		*7.051 Ci*
Sr			*12.787 Ci*	*0.978 Ci*		*0.098 Ci*	*0.880 Ci*		*2.551 Ci*
PCB			*1,187.449 g*	*89.368 g*		*8.937 g*	*86.934 g*		*86.935 g*
RESINS									
Zeolite			349.136 kg	42.189 kg		4.219 kg	37.970 kg		37.970 kg
OIER			59.210 kg	71.017 kg		7.102 kg	63.915 kg		63.915 kg
Pu			*3.099 Ci*	*0.185 Ci*		*0.019 Ci*	*0.167 Ci*		*0.167 Ci*
Am			*0.303 Ci*	*0.027 Ci*		*0.003 Ci*	*0.024 Ci*		*0.024 Ci*
Cs			*0.853 Ci*	*4.516 Ci*		*0.452 Ci*	*4.064 Ci*		*4.064 Ci*
TOTAL ACTIVITIES									
Total U			11.442 kg	9,194.108 kg		9,192.743 kg	1.365 kg		1.365 kg
Total Pu			9.244 Ci	1 728.488 Ci		1 727.873 Ci	0.615 Ci		0.615 Ci
Total Am			3.449 Ci	1 780.642 Ci		1 780.281 Ci	0.361 Ci		0.361 Ci
TRU			**12.693 Ci**	**3 509.130 Ci**		**3 508.154 Ci**	**0.976 Ci**		**0.976 Ci**
Total Cs			95.596 Ci	26 538.953 Ci		26 526.598 Ci	12.355 Ci		12.355 Ci
Total Sr			31.531 Ci	27 104.510 Ci		27 100.747 Ci	3.763 Ci		3.763 Ci
Beta Gamma			**127.128 Ci**	**53 643.463 Ci**		**53 627.345 Ci**	**16.118 Ci**		**16.118 Ci**
CONCENTRATION									
PCB in liquid			0.28 ppb	6.58 ppb		0.32 ppb	2.51 ppb		2.87 ppb
PCB in solids			142.600 ppm	149.362 ppm		149.362 ppm	161.437 ppm		4.371 ppm
Solids			226.41 g/l	0.67 g/l		0.07 g/l	703.00 g/l	2195.12 g/l	2188.38 g/l
U			0.000 g/cm3	0.010 g/cm3		0.010 g/cm3	0.002 g/cm3		0.000 g/cm3
Pu total			**0.251 Ci/m3**	**1.935 Ci/m3**		**1.902 Ci/m3**	**0.803 Ci/m3**		**0.068 Ci/m3**
238 Pu			0.050 Ci/m3	0.387 Ci/m3		0.380 Ci/m3	0.161 Ci/m3		0.014 Ci/m3
239 Pu			0.101 Ci/m3	0.774 Ci/m3		0.761 Ci/m3	0.321 Ci/m3		0.027 Ci/m3
240 Pu			0.101 Ci/m3	0.774 Ci/m3		0.761 Ci/m3	0.321 Ci/m3		0.027 Ci/m3
Am			0.094 Ci/m3	1.993 Ci/m3		1.960 Ci/m3	0.471 Ci/m3		0.040 Ci/m3
TRU			0.345 Ci/m3	3.928 Ci/m3		3.862 Ci/m3	1.274 Ci/m3		0.107 Ci/m3
TRU			**305 nCi/g**	**3 370 nCi/g**		**3 304 nCi/g**	**906 nCi/g**		**49 nCi/g**
Beta Gamma			**3.456 Ci/m3**	**60.041 Ci/m3**		**59.033 Ci/m3**	**21.041 Ci/m3**		**1.774 Ci/m3**

DETAILED STREAM DATA SHEET

TOTAL STREAMS Nominal Case	ST-601 SOLUTION BEFORE NEUTRALIZATION	ST-602 UO2(NO3)2 ADDITION SOLUTION	ST-603 FE(NO3)3 / AL(NO3)3 ADDITION SOLUTION	ST-604 FINAL SOLUTION SENT TO TWRS	ST-605 NANO2 ADDITION SOLUTION	ST-607 NAOH ADDITION SOLUTION	ST-608 WATER ADJUSTMENT	ST-701 RESINS + SOLID SOLUTION AFTER DECANTATION	ST-702 SUPERNATE TO ELIMINATE
Volume	*977.314 m3*	*1.263 m3*	*61.976 m3*	*1620.460 m3*	*187.596 m3*	*278.898 m3*	*140.904 m3*	*18.965 m3*	*33.162 m3*
Density	*1.172*	*1.323*	*1.328*	*1.180*	*1.251*	*1.403*	*1.000*	*1.267*	*1.000*
Total Mass	**1,145,900.207 kg**	**1,670.713 kg**	**82,303.502 kg**	**1,912,818.656 kg**	**234,720.085 kg**	**391,294.379 kg**	**140,903.984 kg**	**24,027.360 kg**	**33,161.944 kg**
Number of packages									
LIQUID									
Volume	*977.286 m3*	*1.263 m3*	*61.976 m3*	*1607.678 m3*	*187.596 m3*	*278.898 m3*	*140.904 m3*	*14.212 m3*	*33.162 m3*
Density	*1.174*	*1.323*	*1.328*	*1.168*	*1.251*	*1.403*	*1.000*	*1.000*	*1.000*
Total Mass Liquid + Gaz	**1,145,840.374 kg**	**1,670.713 kg**	**82,303.502 kg**	**1,877,405.718 kg**	**234,720.085 kg**	**391,294.379 kg**	**140,903.984 kg**	**14,212.262 kg**	**33,161.944 kg**
H2O	816,658.837 kg	1,173.162 kg	52,333.130 kg	1,354,059.224 kg	140,832.051 kg	179,331.636 kg	140,903.984 kg	14,198.559 kg	33,129.972 kg
HNO3	246,553.847 kg							13.382 kg	31.225 kg
H2C2O4	231.564 kg							0.077 kg	0.180 kg
HF	800.972 kg							0.196 kg	0.458 kg
NaOH				18,128.067 kg		211,962.743 kg			
Al(NO3)3	10,019.734 kg		53.094 kg					0.009 kg	0.022 kg
AlF3				1,121.361 kg					
Fe(NO3)3	53,721.488 kg		29,917.278 kg					0.024 kg	0.056 kg
CaO	276.338 kg			276.338 kg				0.000 kg	0.001 kg
NaNO2				93,888.034 kg	93,888.034 kg				
NaNO3				408,070.835 kg					
Miscellaneous	1,861.857 kg			1,861.857 kg				0.002 kg	0.004 kg
UO2(NO3)2	15,715.736 kg	497.552 kg						0.011 kg	0.026 kg
Pu	*1,727.825 Ci*							*0.003 Ci*	*0.007 Ci*
Am	*1,780.265 Ci*							*0.002 Ci*	*0.004 Ci*
Cs	*26,525.565 Ci*			*26,525.565 Ci*				*0.055 Ci*	*0.129 Ci*
Sr	*27,100.649 Ci*							*0.019 Ci*	*0.043 Ci*
PCB	*0.344 g*			*0.017 g*				*0.000 g*	*0.000 g*
GAZ									
NO2									
NO									
PCB									
SOLIDS + RESINS									
Volume	*0.029 m3*			*12.782 m3*				*4.753 m3*	
Density	*2.136*			*2.771*				*2.130*	
Total Mass Solids + Resins	**59.833 kg**			**35,412.938 kg**				**9,815.098 kg**	
Wt% solids	*0.01 wt%*	*0.00 wt%*	*0.00 wt%*	*1.85 wt%*	*0.00 wt%*	*0.00 wt%*	*0.00 wt%*	*40.85 wt%*	*0.00 wt%*
Al(NO3)3									
Al(OH)3	0.059 kg			2,627.994 kg				9.688 kg	
Al2O3	0.526 kg			0.526 kg				86.158 kg	
Fe(NO3)3									
FeOOH	0.518 kg			19,736.529 kg				84.784 kg	
C	0.205 kg			0.205 kg				33.558 kg	
CaO	0.177 kg			0.177 kg				29.008 kg	
Na2C2O4				344.773 kg					
CO2									
H2O									
SiO2	45.373 kg			45.373 kg				7,426.116 kg	
Grout									
Miscellaneous	0.110 kg			0.110 kg				18.050 kg	
Zircaloy	1.190 kg			1.190 kg				194.744 kg	
Grafoil	0.318 kg			0.318 kg				52.465 kg	
HNO3									
H2C2O4									
Na2U2O7				12,644.386 kg					
U	0.011 kg			0.011 kg				0.685 kg	
U3O7	0.009 kg			0.009 kg				0.534 kg	
UH3	0.001 kg			0.001 kg				0.072 kg	
UO2	0.015 kg			0.015 kg				0.920 kg	
UO2(NO3)2									
UO4-4H2O	0.000 kg			0.000 kg				0.011 kg	
Pu	*0.029 Ci*			*1,727.854 Ci*				*0.602 Ci*	
Am	*0.013 Ci*			*1,780.278 Ci*				*0.665 Ci*	
Cs	*0.581 Ci*			*0.581 Ci*				*47.242 Ci*	
Sr	*0.098 Ci*			*27,100.747 Ci*				*6.004 Ci*	
PCB	*8.937 g*			*9.264 g*				*1,467.552 g*	
RESINS									
Zeolite	4.219 kg			4.219 kg				696.527 kg	
OIER	7.102 kg			7.102 kg				1,181.777 kg	
Pu	*0.019 Ci*			*0.019 Ci*				*0.506 Ci*	
Am	*0.003 Ci*			*0.003 Ci*				*0.258 Ci*	
Cs	*0.452 Ci*			*0.452 Ci*				*74.762 Ci*	
TOTAL ACTIVITIES									
Total U	9,493.295 kg	300.552 kg		9,493.295 kg				2.043 kg	0.016 kg
Total Pu	1 727.873 Ci			1 727.873 Ci				1.110 Ci	0.007 Ci
Total Am	1 780.281 Ci			1 780.281 Ci				0.925 Ci	0.004 Ci
TRU	**3 508.154 Ci**			**3 508.154 Ci**				**2.035 Ci**	**0.011 Ci**
Total Cs	26 526.598 Ci			26 526.598 Ci				122.059 Ci	0.129 Ci
Total Sr	27 100.747 Ci			27 100.747 Ci				6.022 Ci	0.043 Ci
Beta Gamma	**53 627.345 Ci**			**53 627.345 Ci**				**128.081 Ci**	**0.173 Ci**
CONCENTRATION									
PCB in liquid	0.30 ppb			0.01 ppb				0.00 ppb	0.00 ppb
PCB in solids	149.362 ppm			0.262 ppm				149.520 ppm	
Solids	0.06 g/l			21.85 g/l				517.54 g/l	
U	0.010 g/cm3	0.238 g/cm3		0.006 g/cm3				0.000 g/cm3	0.000 g/cm3
Pu total	**1.768 Ci/m3**			**1.066 Ci/m3**				**0.059 Ci/m3**	**0.000 Ci/m3**
238 Pu	0.354 Ci/m3			0.213 Ci/m3				0.012 Ci/m3	0.000 Ci/m3
239 Pu	0.707 Ci/m3			0.427 Ci/m3				0.023 Ci/m3	0.000 Ci/m3
240 Pu	0.707 Ci/m3			0.427 Ci/m3				0.023 Ci/m3	0.000 Ci/m3
Am	1.822 Ci/m3			1.099 Ci/m3				0.049 Ci/m3	0.000 Ci/m3
TRU	3.590 Ci/m3			2.165 Ci/m3				0.107 Ci/m3	0.000 Ci/m3
TRU	**3 061 nCi/g**			**1 834 nCi/g**				**85 nCi/g**	**0 nCi/g**
Beta Gamma	**54.872 Ci/m3**			**33.094 Ci/m3**				**6.754 Ci/m3**	**0.005 Ci/m3**

DETAILED STREAM DATA SHEET

TOTAL STREAMS Nominal Case	ST-703 GROUT FORMERS	ST-704 FINAL GROUT WASTES TO ERDF	ST-901 ADDED WATER TO OFF-GAS TREATMENT
Volume	*17.253 m3*	*31.985 m3*	*7.575 m3*
Density	*2.400*	*2.046*	*1.000*
Total Mass	41,406.626 kg	65,433.986 kg	7,575.273 kg
Number of packages		6.664	
LIQUID			
Volume			*7.575 m3*
Density			*1.000*
Total Mass Liquid + Gaz			7,575.273 kg
H2O			7,575.273 kg
HNO3			
H2C2O4			
HF			
NaOH			
Al(NO3)3			
AlF3			
Fe(NO3)3			
CaO			
NaNO2			
NaNO3			
Miscellaneous			
UO2(NO3)2			
Pu			
Am			
Cs			
Sr			
PCB			
GAZ			
NO2			
NO			
PCB			
SOLIDS + RESINS			
Volume	*17.253 m3*	*31.985 m3*	
Density	*2.400*	*2.056*	
Total Mass Solids + Resins	41,406.626 kg	65,433.986 kg	
Wt% solids	*100.00 wt%*	*100.00 wt%*	*0.00 wt%*
Al(NO3)3		0.009 kg	
Al(OH)3		9.688 kg	
Al2O3		86.158 kg	
Fe(NO3)3		0.024 kg	
FeOOH		84.784 kg	
C		33.558 kg	
CaO		29.008 kg	
Na2C2O4			
CO2			
H2O		14,198.559 kg	
SiO2		7,426.116 kg	
Grout	41,406.626 kg	41,406.626 kg	
Miscellaneous		18.248 kg	
Zircaloy		194.744 kg	
Grafoil		52.465 kg	
HNO3		13.382 kg	
H2C2O4		0.077 kg	
Na2U2O7			
U		0.685 kg	
U3O7		0.534 kg	
UH3		0.072 kg	
UO2		0.920 kg	
UO2(NO3)2		0.011 kg	
UO4-4H2O		0.011 kg	
Pu		*0.605 Ci*	
Am		*0.667 Ci*	
Cs		*47.297 Ci*	
Sr		*6.022 Ci*	
PCB		*1,467.552 g*	
RESINS			
Zeolite		696.527 kg	
OIER		1,181.777 kg	
Pu		*0.506 Ci*	
Am		*0.258 Ci*	
Cs		*74.762 Ci*	
TOTAL ACTIVITIES			
Total U		2.043 kg	
Total Pu		1.110 Ci	
Total Am		0.925 Ci	
TRU		2.035 Ci	
Total Cs		122.059 Ci	
Total Sr		6.022 Ci	
Beta Gamma		128.081 Ci	
CONCENTRATION			
PCB in liquid			
PCB in solids		22.428 ppm	
Solids	2400.00 g/l	2045.76 g/l	
U		0.000 g/cm3	
Pu total		0.035 Ci/m3	
238 Pu		0.007 Ci/m3	
239 Pu		0.014 Ci/m3	
240 Pu		0.014 Ci/m3	
Am		0.029 Ci/m3	
TRU		0.064 Ci/m3	
TRU		31 nCi/g	
Beta Gamma		4.004 Ci/m3	

DISTRIBUTION SHEET

To	From	Page 1 of 1
Distribution	Numatec Hanford Corporation Sludge Treatment Project	Date August 26, 1998
Project Title/Work Order		EDT No. 624546
K Basin Sludge Treatment Process Description, HNF-2735		ECN No.

Name	MSIN	Text With All Attach.	Text Only	Attach./ Appendix Only	EDT/ECN Only
Central Files	B1-07	X			
Correspondence Control	A3-01	X			
Fluor Daniel Hanford, Inc.					
M. J. Wiemers	R3-11	X			
DE&S Hanford, Inc.					
D. E. Bullock	R3-86	X			
D. R. Prechectel	X3-85	X			
Numatec Hanford Corporation					
L. de Lamartinie	H7-20	X			
T. A. Flament	H7-20	X			
S. C. Klimper	H7-20	X			
W. C. Miller	H5-25	X			
F. W. Moore	H7-20	X			
K. L. Pearce	H7-20	X			
W. W. Rutherford	H7-20	X			
A. G. Westra	R3-86	X			
K Basins File	X3-85	X			