HNF-EP-0182
Revision 279

0099077

Waste Tank Summary Report for Month Ending June 30, 2011

Prepared for the U.S. Department of Energy
Assistant Secretary for Environmental Management

Contractor for the U.S. Department of Energy
Office of River Protection under Contract DE-AC27-08RV14800

washington river protection solutions

P. O. Box 850
Richland, Washington 99352

HNF-EP-0182
Revision 279

Waste Tank Summary Report for Month Ending June 30, 2011

M. J. Rodgers
Washington River Protection Solutions

Date Published
September 2011

Prepared for the U.S. Department of Energy
Assistant Secretary for Environmental Management

Contractor for the U.S. Department of Energy
Office of River Protection under Contract DE-AC27-08RV14800

washington river protection solutions

P. O. Box 850
Richland, Washington

Approved for Public Release; Further Dissemination Unlimited

TRADEMARK DISCLAIMER

Reference herein to any specific commercial product, process, or service by trade name, trademark, manufacturer, or otherwise, does not necessarily constitute or imply its endorsement, recommendation, or favoring by the United States Government or any agency therein or its contractors or subcontractors.

This report has been reproduced from the best available copy. Available in paper copy.

Printed in the United States of America

WASTE TANK SUMMARY REPORT FOR MONTH ENDING JUNE 30, 2011

M. J. RODGERS
WASHINGTON RIVER PROTECTION SOLUTIONS
Richland, WA 99352
U.S. Department of Energy Contract DE-AC27-08RV14800

EDT/ECN:	DRF	UC:	N/A
Cost Center:	2GB00	Charge Code:	200691
B&R Code:	N/A	Total Pages:	46

Key Words: MONTHLY REPORT, WASTE TANK SUMMARY

Abstract: See page 7 (Purpose and Summary)

TRADEMARK DISCLAIMER. Reference herein to any specific commercial product, process, or service by trade name, trademark, manufacturer, or otherwise, does not necessarily constitute or imply its endorsement, recommendation, or favoring by the United States Government or any agency thereof or its contractors or subcontractors.

SEP 08 2011
DATE:
HANFORD RELEASE
STA: 15
ID. 24

Kelly Wheeler 9/8/2011
Release Approval Date

Release Stamp

Approved For Public Release

DOCUMENT RELEASE FORM

S

(1) Document Number: HNF-EP-0182		(2) Revision Number: 279	(3) Effective Date: 6/30/2011
(4) Document Type:	☐ Digital Image ☐ Hard copy ☒ PDF ☐ Video	(a) Number of pages (including the DRF) or number of digital images 46	
(5) Release Type	☐ New ☐ Cancel	☐ Page Change	☒ Complete Revision
(6) Document Title:	Waste Tank Summary for Month Ending June 30, 2011		
(7) Change/Release Description:	Complete revision - Tables and text updated each month to reflect revised status		
(8) Change Justification:	DOE-ORP requires this document to be revised and issued monthly.		

(9) Associated Structure, System, and Component (SSC) and Building Number:	(a) Structure Location:	(c) Building Number:	(e) Project Number:
	N/A	N/A	N/A
	(b) System Designator:	(d) Equipment ID Number (EIN):	
	N/A	N/A	

(10) Impacted Documents:	(a) Document Type	(b) Document Number	(c) Document Revision
	N/A	N/A	N/A

(11) Approvals:

(a) Author (Print/Sign): M. J. Rodgers *M J Rodgers* Date: 9/7/11

(b) Reviewer (Optional, Print/Sign): D. J. Washenfelder *DJ Washenfelder* Date: 09/07/2011 Date: Date:
Date: Date: Date:
Date: Date: Date:

(c) Responsible Manager (Print/Sign): J. G. Reynolds *J G Reynolds* Date: 09/07/11

(12) Distribution:

(a) Name	(b) MSIN	(a) Name	(b) MSIN	Release Stamp
				SEP 08 2011 DATE: STA: 15 HANFORD RELEASE ID. 24

(13) Clearance	(a) Cleared for Public Release	(b) Restricted Information?	(c) Restriction Type:
	☒ Yes ☐ No	☐ Yes ☒ No	

(14) Clearance Review (Print/Sign): Kelly L Wheeler *Kelly L Wheeler* Date: 9/8/2011

A-6003-881 (REV 3)

Tank Operations Contractor (TOC) **RECORD OF REVISION**	(1) Document Number: HNF-EP-0182	Page 1

(2) Title:

WASTE TANK SUMMARY REPORT FOR MONTH ENDING JUNE 30, 2011

Change Control Record

(3) Revision	(4) Description of Change – Replace, Add, and Delete Pages	Authorized for Release	
		(5) Resp. Engr. (print/sign/date)	(6) Resp. Mgr. (print/sign/date)
153	EDT-631372	BM Hanlon	JS Garfield
279 RS	Incorporation of DRF (Full Revision)	MJ Rodgers 9/7/11	JG Reynolds 9/07/11

CONTENTS

1.0 PURPOSE AND SCOPE 7

2.0 WASTE TANK STATUS 9
Table 2-1. Waste Tank Status 9

2.1 WASTE TANK STATUS HIGHLIGHTS 10
Table 2-2. Single-Shell Tanks in Retrieval Status 10

3.0 DOUBLE-SHELL TANKS MONTHLY SUMMARY TABLES 13
Table 3-1. Inventory and Status by Tanks - Double-Shell Tanks. 13
Table 3-2. Double-Shell Tank Space Allocation, Inventory and Waste Receipts 14

4.0 SINGLE-SHELL TANKS MONTHLY SUMMARY TABLES 15
Table 4-1. Inventory and Status by Tanks - Single-Shell Tanks 15
Table 4-2. Single-Shell Tanks Interim Stabilization Status 20
Table 4-3. Single-Shell Tank Leak Volume Estimates 24

5.0 MISCELLANEOUS UNDERGROUND STORAGE TANKS AND SPECIAL SURVEILLANCE FACILITIES 29
Table 5-1. East and West Area Miscellaneous Underground Storage Tanks and Special Surveillance Facilities 29

APPENDIX A - TANK CONFIGURATION AND FACILITIES CHARTS A-1
Figure A-1. Underground Waste Storage Tank Configurations A-1
Figure A-2. Double-Shell Tank Instrumentation Configuration A-2
Figure A-3. Single-Shell Tank Instrumentation Configuration A-3
Figure A-4 200 East Tank Waste Contents A-4/5
Figure A-5 200 West Tank Waste Contents A-6/7

ACRONYMS

DCRT	Double-Contained Receiver Tank
DIL	Drainable Interstitial Liquid
DLR	Drainable Liquid Remaining
DST	Double-Shell Tank
Gal	Gallon
GPM	Gallons Per Minute
ILL	Interstitial Liquid Level
Kgal	Kilogallons
IP	Intrusion Prevention
IS	Interim Stabilized
MT	Manual Tape
ENRAF	ENRAF Corporation (surface level measurement devices)
OSD	Operating Specifications Document
PFP	Plutonium Finishing Plant
SACS	Surveillance Analysis Computer System
SST	Single-Shell Tank
TMACS	Tank Monitor and Control System
TPA	Hanford Federal Facility Consent and Compliance Order, "Washington State Department of Ecology, U.S. Environmental Protection Agency, and U.S. Department of Energy," as amended (Tri-Party Agreement)
TWINS	Tank Waste Information Network System
UPR	Unplanned Release
WRPS	Washington River Protection Solutions, LLC.

GLOSSARY

General

Characterization - Characterization is understanding the Hanford tank waste chemical, physical, and radiological properties to the extent necessary to ensure safe storage and interim operation, and ultimate disposition of the waste.

Drainable Interstitial Liquid (DIL) - Drainable Interstitial Liquid is calculated based on saltcake and sludge volumes and calculated porosity values. Interstitial liquid is the liquid that fills the interstitial spaces of the solid waste. The sum of the interstitial liquid contained in saltcake and sludge minus an adjustment for capillary height is the initial volume of DIL. Interstitial liquid that is not held in place by capillary forces will, therefore, migrate or move with gravity.

Supernatant Liquid - The liquid above the solids or in large liquid pools covered by floating solids in waste storage tanks.

Total Waste - For purposes of this document, solids volume (sludge and saltcake including liquids) plus supernatant liquid.

Interim Stabilization (Single-Shell Tanks only)

Interim Stabilized (IS) - A tank which contains less than 50 Kilogallons of drainable interstitial liquid and less than 5 Kilogallons of supernatant. If the tank was jet pumped to achieve interim stabilization, then the jet pump flow or saltwell screen inflow must also have been at or below 0.05 gpm before interim stabilization criteria are met.

Jet Pump - The centrifugal pump and jet assembly used to pump the interstitial liquid from the saltwell screen into the pump pit, nominally a 40-foot elevation rise. Pumping rates vary from 0.05 to about 4 gpm.

Saltwell Screen - The saltwell system is a 10-inch diameter saltwell casing consisting of a stainless steel saltwell screen welded to a Schedule 40 carbon steel pipe. The casing and screen are to be inserted into the 12-inch tank riser located in the pump pit. The stainless steel screen portion of the system extends through the tank waste to near the bottom of the tank.

Retrieval/Closure (Single-Shell Tanks only)

Closure (C) - Final closure of the operable units (tank farms) shall be defined as regulatory approval of completion of closure actions and commencement of post-closure actions. For the purposes of this agreement (Hanford Federal Facility Agreement and Consent Order Change Control Form, Change Number M-45-02-03), all units located within the boundary of each tank farm will be closed in accordance with Washington Administrative Code 173-303-610.

Retrieval (R) - The process of removing, to the maximum extent practical, all the waste from a given underground storage tank. The retrieval process is selected specific to each tank and accounts for the waste type stored and the access and support systems available. Per OSD-T-151-00031 a tank is officially in "retrieval status" if one of two conditions is meet: either waste has been physically removed from the tank by retrieval operations, or preparations for retrieval operations are directly responsible for rendering the leak or intrusion monitoring instrument "out of service".

Tank Integrity

Assumed Leaker - The integrity classification of a waste storage tank for which surveillance data indicate a loss of liquid attributed to a breach of integrity.

Sound - The integrity classification of a waste storage tank for which surveillance data indicate no loss of liquid attributed to a breach of integrity.

Surveillance Instrumentation

Annulus - The annulus is the space between the inner and outer shells in double-shell tanks only. Drain channels in the insulating and/or supporting concrete carry any leakage to the annulus space where conductivity probes are installed. The annulus conductivity probes or ENRAFs are the primary means of leak detection for all DSTs. The Leak Detection System may not be replaced by, but may be supplemented by, the operation of an annulus ventilation system Continuous Air Monitor (CAM).

Drywells - Historically, the drywells were monitored with gross gamma radiation logging tools as part of a secondary leak monitoring system. In some cases, neutron probes were used to monitor moisture in the soil as a function of well depth, which could be indicative of tank leakage. The routine gross gamma logging data were stored electronically from 1974 through 1994; a program was initiated in 1995 to log each of the available drywells in each tank farm with a spectral gamma logging system. The spectral gamma logging system provides quantitative values for gamma-emitting radionuclides. The baseline spectral gamma logging database is available electronically. The terms "Drywells" and "Boreholes" are used interchangeably.

ENRAF 854 ATG Level Detector - The ENRAF®[1] gauge, fabricated by Honeywell, determines waste level by detecting variations in the weight of a displacer suspended in the tank waste. ENRAFs transmit digital level data to TMACS via an ENRAF Computer Interface Unit (CIU). The CIU allows fully remote communication with the gauge, minimizing tank farm entry.

Laterals - Laterals are horizontal drywells positioned 8 to 10 feet under single-shell waste storage tanks, 3 per tank, to detect radionuclides in the soil which could be indicative of tank leakage. These drywells can be monitored by radiation detection probes. Laterals are located only in A and SX farms. There are currently no functioning laterals and no plan to prepare them for use.

Liquid Observation Well (LOW) - In-tank liquid observation wells are used for monitoring the ILL in single-shell tanks. The wells are usually constructed of fiberglass or TEFZEL®[2]-reinforced epoxy-polyester resin. A few LOWs are constructed of steel. Gamma and neutron probes are used to monitor changes in the ILL, and can indicate intrusions or leakage by increases or decreases in the ILL. The OSD-T-151-00031 identifies which LOWs are designated as the primary monitoring device in the SSTs. All of the SST LOWs are monitored quarterly. Two LOWs installed in DSTs SY-102 and AW-103 are used for special, rather than routine, surveillance purposes only.

Surface Levels - The surface level measurements in all waste storage tanks are monitored by manual probes or ENRAFs, and recorded and transmitted via the Surveillance Analysis Computer System.

[1] ENRAF® is a registered trademark of Honeywell International, Inc., Morristown, New Jersey.
[2] TEFZEL® is a trademark of E. I. du Pont de Nemours & Company, Wilmington, Delaware.

1.0 PURPOSE AND SCOPE

This report is the official inventory for radioactive waste stored in underground tanks in the 200 Areas at the Hanford Site. Data that depict the status of stored radioactive waste and tank vessel integrity are contained within the report. This report provides data on each of the existing 177 large underground waste storage tanks and smaller miscellaneous underground storage tanks and special surveillance facilities, and supplemental information regarding tank surveillance anomalies and ongoing investigations. This report is intended to meet the requirement of U.S. Department of Energy Order 435.1 (DOE-HQ, August 28, 2001, Radioactive Waste Management, U.S. Department of Energy-Washington, D.C.) requiring the reporting of waste inventories and space utilization for the Hanford Site Tank Farm tanks.

This page intentionally left blank.

2.0 WASTE TANK STATUS

Table 2-1. Waste Tank Status

Double-Shell Tanks (DST)	28 double-shell	10/86 - date last DST tank was completed
Single-Shell Tanks (SST)	149 single-shell	1966 - date last SST tank was completed
Assumed Leaker Tanks	67 single-shell	02/94 - date last Assumed Leaker was identified (4)
Sound Tanks	28 double-shell 82 single-shell	1986 - date DSTs determined sound 07/93 - date last SST determined sound
Interim Stabilized Tanks (IS)	149 single-shell	06/10 - date last IS occurred (1)
Retrieval	12 single-shell	4/09 - date last Retrieval completed (2)
Misc. Underground Storage Tanks (MUST) and Special Surveillance Facilities (Active)	10 Tanks East Area 7 Tanks West Area	03/01 - last date a tank was added or removed from MUST list
Misc. Underground Storage Tanks (IMUST) and Special Surveillance Facilities (Inactive)	18 Tanks East Area 25 Tanks West Area	11/01 - last date a tank was added or removed from IMUST list (3)

Table 2-1 Footnotes:

(1) Tanks are declared Interim Stabilized when pumping stops; the tank may be placed in evaluation at this time. Retrieval operations began in Tank S-102 on December 16, 2004, and were suspended in July 2007. Actions were subsequently taken to reduce the remaining liquid volume to below interim stabilization criteria. A letter was submitted to DOE on June 1, 2010, that stated tank S-102 again met interim stabilization criteria.

Saltwell pumping for the tanks covered by Consent Decree CT-99-5076-EFS, filed September 30, 1999, was completed in March 2004. The Consent Decree table and footnotes have been removed from this document; all actions in this decree have been completed. Court Order CV-99-5076-EFS, Document 30, was filed March 8, 2011, terminating the consent decree.

(2) Under a previous definition for retrieval status, the tank status for C-104, C-201, C-202, C-203, C-204, S-102, S-103, S-105 and S-106 was changed to "Retrieval," effective October 2002, and the tank status for C-103, C-105, C-106, and S-112 was changed to "Retrieval" in October 2003. Hanford Federal Facility Agreement and Consent Order (signed August 2004) modified Milestone M-45-00C (Change Order M-45-04-01) changing the regulatory requirements for retrieval of waste in tanks S-103, S-105, and S-106. Table 2-2 identifies the tanks currently in retrieval status (see Glossary for definition of Retrieval status). Retrieval operations in Tank S-102 were suspended in July 2007, and the remaining liquid volume reduced to below interim stabilization criteria. Tank S-102 is not counted as part of Retrieval in this table and Tables 2-2 and 4-1.

(3) Inactive Miscellaneous Underground Storage Tanks (IMUST) reflect those tanks managed by Washington River Protection Solutions, LLC (WRPS).

(4) Occurrence Report RL-WHC-TANKFARM-1994-0009 states that tank 241-T-111 was declared an "assumed re-leaker" on February 28, 1994, due to a decreasing trend in surface level measurement.

2.1 WASTE TANK STATUS HIGHLIGHTS

Table 2-2. Single-Shell Tanks in Retrieval Status

Tank Number	Comments	Nominal Volume of Remaining Waste (gal) (1)	Reference
241-C-103	Declared "Retrieval Completed," August 23, 2006	2528	(2)
241-C-104	Declared "Retrieved to Limit of Modified Sluicing Technology," June 17, 2011	4710	(13)
241-C-106	Declared "Retrieval Completed," December 31, 2003	2770	(3)
241-C-108	Declared "Retrieved to Limit of Modified Sluicing Technology" April 27, 2007	7700	(9)
241-C-109	Declared "Retrieved to Limit of Modified Sluicing Technology," August 23, 2007	8600	(10)
241-C-110	Declared "Retrieved to Limit of Modified Sluicing Technology," April 27, 2009	17.2 kgal	(11)
241-C-111	Retrieval in progress – retrieval initiated September 14, 2010	32.2 kgal	(12)
241-C-201	Declared "Retrieval Completed," March 23, 2006	144	(4)
241-C-202	Declared "Retrieval Completed," August 11, 2005	147	(5)
241-C-203	Declared "Retrieval Completed," March 24, 2005	139	(6)
241-C-204	Declared "Retrieval Completed," December 11, 2006	134	(7)
241-S-112	Declared "Retrieval Completed," March 2, 2007	2389	(8)

Table 2-2 Footnotes:

(1) Nominal volume of waste inventory is the best estimate of residual volume. Retrieval Data Reports also provide 95% upper confidence level volume as the bounding estimate of remaining waste.

(2) RPP-RPT-33060 Rev. 0 *Demonstration Retrieval Data Report for Single-Shell Tank 241-C-103*

(3) RPP-20577 Rev. 1 *Stage 2 Retrieval Data Report for Single-Shell Tank 241-C-106*

(4) RPP-29441 Rev. 0 *Post-Retrieval Waste Volume Determination for Single-Shell Tank 241-C-201*

(5) RPP-RPT-29095 Rev. 0 *Demonstration Retrieval Data Report for Single-Shell Tank 241-C-202*

(6) RPP-RPT-26475 Rev. 1A *Demonstration Retrieval Data Report for Single-Shell Tank 241-C-203*

(7) RPP-RPT-34062 Rev. 0 *Demonstration Retrieval Data Report for Single-Shell Tank 241-C-204*

(8) RPP-RPT-35112 Rev. 0 *Retrieval Data Report for Single-Shell Tank 241-S-112*

(9) CH2M-0603302.4, *Contract Number DE-AC27-99RL 14047 – Completion of Performance Based Incentive 3, Revision 2, Fee Bearing Milestone PBI-3.2.a.05, C-108 Completion of Retrieval Operations - Request for Incremental Fee Approval.*

(10) CH2M-0701435.4, *Contract Number DE-AC27-99RL 14047 – Completion of Performance Based Incentive 3, Revision 2, Fee Bearing Milestone PBI-3.2.b.05, C-109 Completion of Retrieval Operations - Request for Incremental Fee Approval.* Letter indicated that 241-C-109 contained 1320 ft^3 of remaining waste at time of writing. Volume in table reflects minor changes as a result of further retrieval operations since that time.

(11) WRPS-00900077.2, *Contract Number DE-AC27-08RV14800 – Washington River Protection Solutions LLC Completion of Performance Based Incentive 2.2, Fee Bearing Milestone PBI-2.2.3, Complete Retrieval of Tank 241-C-110 – Request for Incremental Fee Approval.*

(12) Volume estimate: Total waste 32170 gallons remaining at the end of November 2010, according to a Retrieval & Closure status report email dated 12/14/2010.

(13) WRPS-1102627, *Contract Number DE-AC27-08RV14800 – Washington River Protection Solutions LLC Completion of Performance Based Incentive 2.8, Fee Bearing Milestone PBI-2.8.1, "Complete Bulk Retrieval of Tank 241-C-104" – Request for Incremental Fee Approval.*

Hanford Federal Facility Agreement and Consent Order (HFFACO) Milestone M-46-21
The U.S. Department of Energy sent a letter (05-TPD-115) to the Department of Ecology on December 15, 2005 stating that the HFFACO Milestone M-46-21 had been completed. The milestone included completing implementation of double-shell tank space optimization study recommendations and creating sufficient double-shell tank storage to accommodate retrieval and closure demonstrations at tanks C-104, C-106, S-102, S-103, S-105, S-106, and S-112. TPA Change Package M-45-04-01 substantially changed the tank retrieval sequence to eliminate retrieval of S-103, S-105 and S-106. The DST space-saving measures of M-46-21 provide sufficient space to support retrieval of the C farm tanks that are to be retrieved in lieu of S-103, S-105 and S-106.

Tank Leak Volume Estimates
In *Waste Tank Summary Report for Month Ending September 30, 2005*, HNF-EP-0182, Rev. 210, the leak volume estimates were revised per *Tank Farm Vadose Zone Contamination Volume Estimates*, RPP-23405, Rev. 1. The Washington State Department of Ecology has submitted comments on *Tank Farm Vadose Zone Contamination Volume Estimates* and until these comments have been resolved, the previous leak volume estimates have been reinstated.

Subsequent to issuance of RPP-23405, the U.S. Department of Energy and the Washington State Department of Ecology agreed on a process to update leak volume estimates and the conclusions presented in RPP-23405 (DOE-ORP 06-TPD-059). Pursuant to that commitment, RPP-32681, Rev. 0, *Process to Assess Tank Farm Leaks in Support of Retrieval and Closure Planning* established the process to develop estimates of tank farm leak loss inventories. The process is used to assess the source of tank farm leaks when necessary to support tank waste retrieval technology selections, and re-assess and update volume estimates and inventories for previously identified tank leaks. If the results suggest a change to the tank's integrity classification, the Tank Leak Assessment Process TFC-ENG-CHEM-D-42 would be invoked. The bases for revisions to leak volume estimates or for changes to tank integrity resulting from this activity are footnoted after table 4-3.

DST Space Gains
OSD-T-151-00007 *Operating Specification for Double-Shell Storage Tanks,* has updated the operating limits in the double-shell tanks. Per RPP-CALC-33163 Rev. 0 and RPP-13019 Rev. 0, all tank farms currently assume the Maximum Operating Limit, which results in space gains of 437 Kgal.

This page intentionally left blank.

3.0 DOUBLE-SHELL TANKS MONTHLY SUMMARY TABLES

Table 3-1. Inventory and Status by Tanks - Double-Shell Tanks

All volume data obtained from Tank Waste Information Network System (TWINS)

					Waste Volumes			
Tank	Tank Integrity	Tank Level (inches)	Total Waste (Kgal)	Available Space (Kgal)	Supernatant Liquid (Kgal)	Sludge (Kgal)	Saltcake (Kgal)	Solids Volume Update
241-AN TANK FARM STATUS								
AN-101	SOUND	302	830	330	544	255	31	05/09/11
AN-102	SOUND	379	1043	117	889	0	154	05/21/06
AN-103	SOUND	349	960	200	474	0	486	09/30/09
AN-104	SOUND	382	1049	111	606	0	443	07/01/02
AN-105	SOUND	409	1124	36	588	0	536	09/24/09
AN-106	SOUND	280	770	390	415	338	17	10/01/09
AN-107	SOUND	395	1085	75	844	0	241	04/01/10
7 TANKS - TOTAL			6861	1259	4360	593	1908	
241-AP TANK FARM STATUS								
AP-101	SOUND	403	1108	52	1108	0	0	08/01/07
AP-102	SOUND	392	1079	81	1051	28	0	07/01/07
AP-103	SOUND	450	1236	21	1184	0	52	10/01/08
AP-104	SOUND	162	444	716	426	0	18	04/01/08
AP-105	SOUND	414	1137	23	1032	0	105	10/01/07
AP-106	SOUND	412	1134	26	1134	0	0	10/17/02
AP-107	SOUND	399	1096	64	1096	0	0	04/02/08
AP-108	SOUND	452	1243	14	1131	0	112	07/01/08
8 TANKS - TOTAL			8477	997	8162	28	287	
241-AW TANK FARM STATUS								
AW-101	SOUND	412	1133	27	737	0	396	01/31/03
AW-102	SOUND	84	230	930	178	52	0	04/01/10
AW-103	SOUND	395	1087	73	767	280	40	03/03/09
AW-104	SOUND	386	1062	98	808	97	157	01/01/08
AW-105	SOUND	148	408	752	160	248	0	03/03/09
AW-106	SOUND	232	637	523	368	0	269	04/01/10
6 TANKS - TOTAL			4560	2400	3021	677	862	
241-AY TANK FARM STATUS								
AY-101	SOUND	325	893	125	788	105	0	01/05/09
AY-102	SOUND	321	883	135	732	151	0	01/06/09
2 TANKS - TOTAL			1776	260	1520	256	0	
241-AZ TANK FARM STATUS								
AZ-101	SOUND	335	922	96	870	52	0	09/11/08
AZ-102	SOUND	331	909	109	804	105	0	11/01/08
2 TANKS - TOTAL			1831	205	1674	157	0	
241-SY TANK FARM STATUS								
SY-101	SOUND	404	1112	48	857	0	255	04/01/08
SY-102	SOUND	202	554	606	355	199	0	10/01/10
SY-103	SOUND	270	742	418	385	0	357	07/01/07
3 TANKS - TOTAL			2408	1072	1597	199	612	

Notes:

1 Kgal differences are the result of computer rounding.

Supernatant + Sludge (includes liquid) + Saltcake (includes liquid) = Total Waste.

Available Space Volumes include restricted space.

Tanks AN-103, AN-104, AN-105, AW-101, SY-101 and SY-103 contain retained gas in the saltcake.

Solids Volume Update lists the last verified date when the Sludge or Saltcake volume in the tank changed or was measured for changes.

(1) Maximum operating level for 241-AP farm reduced from 454" to 422" for tanks AP-101, AP-102, AP-104,AP -105, AP-106, and AP-107, per OSD-T-151-00007 Rev 3, pending completion of in-service leak checks.

Table 3-2. Double-Shell Tank Space Allocation, Inventory and Waste Receipts (all volumes in Kilogallons)

TOTAL DST CAPACITY	
TOTAL=	32,106

TOTAL DST WASTE INVENTORY	
INVENTORY ON 06/30/11	25,910
INVENTORY ON 05/31/11	25,908
CHANGE =	2

ALLOCATION OF REMAINING DST SPACE	
TOTAL DST CAPACITY (*) =	32,106
WASTE INVENTORY =	-25,910
RESTRICTED USAGE SPACE (**) =	-1,119
EMERGENCY SPACE ALLOCATION (***) =	-1,265
AVAILABLE SPACE =	3,812

(*) Assumes Maximum Operating Limits per OSD-T-151-00007: AN, AW, SY farms = 422", AP farm = 422", except AP-103 and AP-108 = 458"; AY, AZ farms = 370". Volumes at maximum operating limit from RPP-CALC-33163 Rev. 0 and RPP-13019 Rev. 0.

(**) Restricted space associated with flammable gas Waste Group A and tanks controlled for waste feed delivery per Feed Control List, HNF-SD-WM-OCD-015, Tank Farms Waste Transfer Compatibility report. These tanks are: AN-102, -103, -104, -105, -107; AW-101; AY-102; and SY-103.

(***) Includes 1265 Kilogallons emergency space allocation per HNF-3484 Rev. 8 and emergency WTP returns per 24950-WTP-ICD-MG-019, Rev. 4, ICD 19 - Interface Control Document for Waste Feed.

JUNE DST WASTE RECEIPTS					
FACILITY GENERATIONS		OTHER GAINS ASSOCIATED WITH		OTHER LOSSES ASSOCIATED WITH	
TANK FARMS	0	AZ-301 CONDENSATE	10	242-A EVAPORATOR WVR (1)	0
242-A EVAPORATOR	0	INSTRUMENTATION (2)	2	INSTRUMENTATION (2)	0
		MISCELLANEOUS (3)	2	MISCELLANEOUS (3)	0
		THERMAL EXPANSION (4)	0	WASTE EVAPORATION	12
TOTAL =	0	TOTAL=	14	TOTAL=	12

(1) 242-A EVAPORATOR WVR is total (before flush) waste volume reduction for 242-A Evaporator

(2) Adjustments due to instrumentation recalibrations and/or instrument flushing

(3) Adjustments for gas retention and release from Waste Group A tanks

(4) Adjustments for thermal expansion of liquids inside tanks

DST NET WASTE INVENTORY CHANGE					
DATE	FACILITY GENERATION	GAINS	REDUCTIONS	NET WASTE VOLUME CHANGE	TOTAL DST WASTE INVENTORY
6/11	0	14	12	2	25,910

4.0 SINGLE SHELL TANKS MONTHLY SUMMARY TABLES

Table 4-1. Inventory and Status by Tanks - Single-Shell Tanks
All volume data obtained from Tank Waste Information Network System (TWINS)

				Waste Volumes							
Tank Number	Tank Integrity	Tank Status	Total Waste (Kgal)	Super-natant Liquid (Kgal)	Drainable Interstitial Liquid (Kgal)	Pumped this Month (Kgal)	Total Pumped (Kgal)	Drainable Liquid Remaining (Kgal)	Sludge (Kgal)	Salt-cake (Kgal)	Solids Volume Update
241-A TANK FARM STATUS											
A-101	SOUND	IS/IP(4)	320	0	37	0	543	37	3	317	06/30/04
A-102	SOUND	IS	40	3	9	0	40	12	0	37	01/31/03
A-103	ASMD LKR	IS/IP	378	4	86	0	111	90	2	372	07/01/05
A-104	ASMD LKR	IS/IP	28	0	0	0	0	0	28	0	01/27/78
A-105	ASMD LKR	IS/IP	37	0	0	0	0	0	37	0	10/31/00
A-106	SOUND	IS/IP	79	0	9	0	0	9	50	29	01/01/02
6 TANKS - TOTAL			882	7					120	755	
241-AX TANK FARM STATUS											
AX-101	SOUND	IS	358	0	44	0	369	44	3	355	12/31/03
AX-102	ASMD LKR	IS/IP	30	0	0	0	13	0	6	24	01/01/02
AX-103	SOUND	IS/IP	107	0	22	0	0	22	8	99	09/30/03
AX-104	ASMD LKR	IS/IP	7	0	0	0	0	0	7	0	01/01/02
4 TANKS - TOTAL			502	0					24	478	
241-B TANK FARM STATUS											
B-101	ASMD LKR	IS/IP	109	0	20	0	0	20	28	81	01/01/02
B-102	SOUND	IS/IP	32	4	7	0	0	11	0	28	06/30/99
B-103	ASMD LKR	IS/IP	56	0	10	0	0	10	1	55	01/01/02
B-104	SOUND	IS/IP	374	0	45	0	0	45	309	65	01/01/02
B-105	ASMD LKR	IS/IP	290	0	20	0	0	20	28	262	01/01/02
B-106	SOUND	IS/IP	123	1	8	0	0	9	122	0	12/31/03
B-107	ASMD LKR	IS/IP	161	0	23	0	0	23	86	75	01/01/02
B-108	SOUND	IS/IP	92	0	19	0	0	19	27	65	06/30/04
B-109	SOUND	IS/IP	126	0	23	0	0	23	50	76	10/01/05
B-110	ASMD LKR	IS/IP	245	1	27	0	0	28	244	0	01/01/02
B-111	ASMD LKR	IS/IP	242	1	23	0	0	24	241	0	01/01/02
B-112	ASMD LKR	IS/IP	35	3	2	0	0	5	15	17	01/01/02
B-201	ASMD LKR	IS/IP	29	0	5	0	0	5	29	0	07/01/04
B-202	SOUND	IS/IP	28	0	4	0	0	4	28	0	07/01/04
B-203	ASMD LKR	IS/IP	50	1	5	0	0	6	49	0	07/01/04
B-204	ASMD LKR	IS/IP	50	1	5	0	0	6	49	0	07/01/05
16 TANKS - TOTAL			2042	12					1306	724	
241-BX TANK FARM STATUS											
BX-101	ASMD LKR	IS/IP	48	0	4	0	0	4	48	0	01/01/02
BX-102	ASMD LKR	IS/IP	79	0	0	0	0	0	79	0	06/30/04
BX-103	SOUND	IS/IP	75	13	4	0	0	17	62	0	01/01/83
BX-104	SOUND	IS/IP	100	3	4	0	17	7	97	0	01/01/02
BX-105	SOUND	IS/IP	72	5	4	0	15	9	42	25	01/01/05
BX-106	SOUND	IS/IP	38	0	4	0	14	4	10	28	01/01/05
BX-107	SOUND	IS/IP	347	0	37	0	23	37	347	0	09/18/90
BX-108	ASMD LKR	IS/IP	31	0	4	0	0	4	31	0	01/31/01
BX-109	SOUND	IS/IP	193	0	25	0	8	25	193	0	09/17/90
BX-110	ASMD LKR	IS/IP	214	1	35	0	2	36	65	148	08/25/05
BX-111	ASMD LKR	IS/IP	188	0	6	0	117	6	32	156	08/25/05
BX-112	SOUND	IS/IP	164	1	9	0	4	10	163	0	01/01/02
12 TANKS - TOTAL			1549	23					1169	357	

Table 4-1. Inventory and Status by Tanks - Single-Shell Tanks

All volume data obtained from Tank Waste Information Network System (TWINS)

				Waste Volumes							
Tank Number	Tank Integrity	Tank Status	Total Waste (Kgal)	Super-natant Liquid (Kgal)	Drainable Interstitial Liquid (Kgal)	Pumped this Month (Kgal)	Total Pumped (Kgal)	Drainable Liquid Remaining (Kgal)	Sludge (Kgal)	Salt-cake (Kgal)	Solids Volume Update
241-BY TANK FARM STATUS											
BY-101	SOUND	IS/IP	370	0	24	0	36	24	37	333	01/01/02
BY-102	SOUND	IS	278	0	40	0	159	40	0	278	08/25/05
BY-103	ASMD LKR	IS	414	0	55	0	96	55	9	405	07/01/05
BY-104	SOUND	IS/IP	405	0	44	0	330	44	46	359	01/01/02
BY-105	ASMD LKR	IS	481	0	47	0	45	47	48	433	03/31/03
BY-106	ASMD LKR	IS	430	0	37	0	99	37	32	398	12/31/03
BY-107	ASMD LKR	IS/IP	271	0	42	0	56	42	15	256	07/01/05
BY-108	ASMD LKR	IS/IP	222	0	33	0	28	33	40	182	01/01/02
BY-109	SOUND	IS	287	0	37	0	157	37	24	263	06/30/04
BY-110	SOUND	IS/IP	366	0	20	0	213	20	43	323	01/01/02
BY-111	SOUND	IS/IP	402	0	14	0	313	14	0	402	08/25/05
BY-112	SOUND	IS/IP	286	0	24	0	116	24	2	284	03/31/02
12 TANKS - TOTAL			4212	0					296	3916	
241-C TANK FARM STATUS											
C-101	ASMD LKR	IS/IP	88	0	4	0	0	4	88	0	11/29/83
C-102	SOUND	IS/IP	316	0	62	0	47	62	316	0	09/30/95
C-103	SOUND	RC	3	Retrieval Completed 08/26/06 – See Footnote (9)				0	2	0	08/26/06
C-104	SOUND	IS/IP	5	Retrieved to Limit of Modified Sluicing Technology 4/27/07 – See Footnote (14)					5	0	05/09/11
C-105	SOUND	IS	132	0	10	0	0	10	132	0	02/29/00
C-106	SOUND	RC	3	Retrieval Completed 12/31/03 – See Footnote (1)				0	3	0	02/26/04
C-107	SOUND	IS/IP	253	6	30	0	41	30	247	0	01/01/11
C-108	SOUND	R	7	Retrieved to Limit of Modified Sluicing Technology 4/27/07 – See Footnote (11)				0	7	0	01/01/10
C-109	SOUND	R	9	Retrieved to Limit of Modified Sluicing Technology 8/13/07 – See Footnote (12)				0	8	0	08/13/07
C-110	ASMD LKR	R	17	Retrieved to Limit of Modified Sluicing Technology 4/27/09 – See Footnote (13)					17	0	4/27/09
C-111	ASMD LKR	IS/IP	32	Retrieval in progress – See Footnote (15)				4	32	0	06/30/04
C-112	SOUND	IS/IP	105	1	6	0	0	6	104	0	09/18/90
C-201	ASMD LKR	RC	0	Retrieval Completed 03/23/06 – See Footnote (8)				0	0	0	04/27/06
C-202	ASMD LKR	RC	0	Retrieval Completed 08/11/05 – See Footnote (2)				0	0	0	08/11/05
C-203	ASMD LKR	RC	0	Retrieval Completed 03/24/05 – See Footnote (5)				0	0	0	3/24/05
C-204	ASMD LKR	RC	0	Retrieval Completed 12/13/06 – See Footnote (10)				0	0	0	12/13/06
16 TANKS - TOTAL			970	8					961	0	
241-S TANK FARM STATUS											
S-101	SOUND	IS	352	0	45	0	67	45	235	117	04/30/04
S-102	SOUND	IS (6)	93	2	5	0	0	8	22	69	10/01/10
S-103	SOUND	IS (3)	237	1	45	0	24	46	9	227	06/30/04
S-104	ASMD LKR	IS/IP (4)	288	0	49	0	0	49	132	156	12/20/84
S-105	SOUND	IS/IP (3)	406	0	42	0	114	42	2	404	01/01/02
S-106	SOUND	IS (3)	455	0	26	0	204	26	0	455	02/28/01
S-107	SOUND	IS	358	0	42	0	83	42	320	38	02/26/04
S-108	SOUND	IS	550	0	4	0	200	4	5	545	01/01/02
S-109	SOUND	IS	533	0	16	0	34	16	13	520	07/01/04
S-110	SOUND	IS	389	0	30	0	203	30	96	293	07/01/04
S-111	SOUND	IS (4)	401	0	42	0	100	42	76	325	07/01/04
S-112	SOUND	RC	2	Retrieval Completed 03/02/07 – See Footnote (7)				0	2	0	03/02/07
12 TANKS - TOTAL			4064	3					912	3149	

Table 4-1. Inventory and Status by Tanks - Single-Shell Tanks

All volume data obtained from Tank Waste Information Network System (TWINS)

				Waste Volumes							
Tank Number	Tank Integrity	Tank Status	Total Waste (Kgal)	Super-natant Liquid (Kgal)	Drainable Interstitial Liquid (Kgal)	Pumped this Month (Kgal)	Total Pumped (Kgal)	Drainable Liquid Remaining (Kgal)	Sludge (Kgal)	Salt-cake (Kgal)	Solids Volume Update
241-SX TANK FARM STATUS											
SX-101	SOUND	IS	420	0	44	0	33	45	144	276	06/30/04
SX-102	SOUND	IS	342	0	37	0	98	37	55	287	08/31/04
SX-103	SOUND	IS	509	0	40	0	134	40	78	431	09/30/03
SX-104	ASMD LKR	IS/IP	446	0	48	0	231	48	136	310	04/30/00
SX-105	SOUND	IS	375	0	39	0	153	39	63	312	12/31/02
SX-106	SOUND	IS	396	0	37	0	148	37	0	396	01/31/03
SX-107	ASMD LKR	IS/IP	94	0	7	0	0	7	94	0	07/01/04
SX-108	ASMD LKR	IS/IP	74	0	0	0	0	0	74	0	06/30/04
SX-109	ASMD LKR	IS/IP	241	0	0	0	0	0	66	175	07/01/04
SX-110	ASMD LKR	IS/IP	56	0	0	0	0	0	49	7	07/01/04
SX-111	ASMD LKR	IS/IP	115	0	11	0	0	11	97	18	07/01/04
SX-112	ASMD LKR	IS/IP	75	0	6	0	0	6	75	0	07/01/04
SX-113	ASMD LKR	IS/IP	19	0	0	0	0	0	19	0	01/01/02
SX-114	ASMD LKR	IS/IP	155	0	30	0	0	30	126	29	07/01/04
SX-115	ASMD LKR	IS/IP	4	0	0	0	0	0	4	0	01/01/02
15 TANKS - TOTAL			3321	0					1080	2241	
241-T TANK FARM STATUS											
T-101	ASMD LKR	IS	99	0	16	0	25	16	37	62	06/30/04
T-102	SOUND	IS/IP	32	13	3	0	0	16	19	0	08/31/84
T-103	ASMD LKR	IS/IP	27	4	3	0	0	7	23	0	11/29/83
T-104	SOUND	IS	317	0	31	0	150	31	317	0	11/30/99
T-105	SOUND	IS/IP	98	0	5	0	0	5	98	0	05/29/87
T-106	ASMD LKR	IS/IP	22	0	0	0	0	0	22	0	01/01/01
T-107	ASMD LKR	IS	173	0	34	0	11	34	173	0	05/31/96
T-108	ASMD LKR	IS/IP	16	0	4	0	0	4	5	11	01/01/01
T-109	ASMD LKR	IS/IP	62	0	11	0	0	11	0	62	01/01/02
T-110	SOUND	IS	370	1	48	0	50	49	369	0	03/31/02
T-111	ASMD LKR	IS	447	0	38	0	10	38	447	0	01/01/02
T-112	SOUND	IS/IP	67	7	4	0	0	11	60	0	04/28/82
T-201	SOUND	IS/IP	30	2	4	0	0	6	28	0	07/01/04
T-202	SOUND	IS/IP	20	0	3	0	0	3	20	0	07/01/04
T-203	SOUND	IS/IP	36	0	5	0	0	5	36	0	07/01/04
T-204	SOUND	IS/IP	36	0	5	0	0	5	36	0	07/01/04
16 TANKS - TOTAL			1852	27					1690	135	
241-TX TANK FARM STATUS											
TX-101	SOUND	IS/IP	91	0	7	0	0	7	74	17	01/01/02
TX-102	SOUND	IS/IP	217	0	27	0	94	27	2	215	03/31/03
TX-103	SOUND	IS/IP	145	0	18	0	68	18	0	145	01/01/02
TX-104	SOUND	IS/IP	69	2	9	0	4	11	34	33	06/30/04
TX-105	ASMD LKR	IS/IP	576	0	25	0	122	25	8	568	01/01/02
TX-106	SOUND	IS/IP	348	0	37	0	135	37	5	343	03/31/02
TX-107	ASMD LKR	IS/IP	30	0	7	0	0	7	0	30	01/31/03
TX-108	SOUND	IS/IP	127	0	8	0	14	8	6	121	06/30/04
TX-109	SOUND	IS/IP	363	0	6	0	72	6	363	0	01/01/02
TX-110	ASMD LKR	IS/IP	467	0	14	0	115	14	37	430	01/01/02
TX-111	SOUND	IS/IP	364	0	10	0	98	10	43	321	06/30/04
TX-112	SOUND	IS/IP	634	0	26	0	94	26	0	634	01/01/02
TX-113	ASMD LKR	IS/IP	638	0	18	0	19	18	93	545	06/30/04
TX-114	ASMD LKR	IS/IP	532	0	17	0	104	17	4	528	01/01/02
TX-115	ASMD LKR	IS/IP	553	0	25	0	99	25	8	545	06/30/04
TX-116	ASMD LKR	IS/IP	599	0	21	0	24	21	66	533	04/30/03
TX-117	ASMD LKR	IS/IP	626	0	10	0	54	10	29	597	04/01/11
TX-118	SOUND	IS/IP	247	0	31	0	89	31	0	247	06/30/04
18 TANKS - TOTAL			6626	2					772	5852	

Table 4-1. Inventory and Status by Tanks - Single-Shell Tanks
All volume data obtained from Tank Waste Information Network System (TWINS)

				Waste Volumes							
Tank Number	Tank Integrity	Tank Status	Total Waste (Kgal)	Super-natant Liquid (Kgal)	Drainable Interstitial Liquid (Kgal)	Pumped this Month (Kgal)	Total Pumped (Kgal)	Drainable Liquid Remaining (Kgal)	Sludge (Kgal)	Salt-cake (Kgal)	Solids Volume Update
241-TY TANK FARM STATUS											
TY-101	ASMD LKR	IS/IP	118	0	2	0	8	2	42	76	07/01/05
TY-102	SOUND	IS/IP	69	0	13	0	7	13	0	69	01/01/02
TY-103	ASMD LKR	IS/IP	154	0	23	0	12	23	103	51	06/30/04
TY-104	ASMD LKR	IS/IP	44	1	4	0	0	5	43	0	03/31/02
TY-105	ASMD LKR	IS/IP	231	0	12	0	4	12	231	0	04/28/82
TY-106	ASMD LKR	IS/IP	16	0	1	0	0	1	16	0	01/01/02
6 TANKS - TOTALS			632	1					435	196	
241-U TANK FARM STATUS											
U-101	ASMD LKR	IS/IP	23	0	4	0	0	4	23	0	06/30/04
U-102	SOUND	IS	327	1	37	0	87	38	43	283	12/31/02
U-103	SOUND	IS	417	1	33	0	99	34	11	405	01/01/05
U-104	ASMD LKR	IS/IP	54	0	0	0	0	0	54	0	01/01/02
U-105	SOUND	IS	353	0	44	0	88	44	32	321	03/30/01
U-106	SOUND	IS	170	2	36	0	39	39	0	168	06/30/04
U-107	SOUND	IS	294	0	32	0	135	32	15	279	12/31/03
U-108	SOUND	IS	434	0	46	0	115	46	29	405	09/30/04
U-109	SOUND	IS	401	0	47	0	78	47	35	366	04/30/02
U-110	ASMD LKR	IS	176	0	16	0	0	16	176	0	01/01/02
U-111	SOUND	IS	222	0	31	0	86	31	26	196	08/31/03
U-112	ASMD LKR	IS/IP	45	0	4	0	0	4	45	0	02/10/84
U-201	SOUND	IS/IP	4	1	1	0	0	2	3	0	06/30/03
U-202	SOUND	IS/IP	4	1	0	0	0	1	3	0	06/30/03
U-203	SOUND	IS/IP	3	1	0	0	0	1	2	0	06/30/03
U-204	SOUND	IS/IP	3	1	0	0	0	1	2	0	06/30/03
16 TANKS - TOTALS			2930	8					499	2423	

Note: +/- 1 Kgal difference in volumes is due to rounding.
Tank farm totals do not include volumes from tanks in retrieval

Tank Integrity:
ASMD LKR – Assumed Leaker
SOUND – Sound Tank

Tank Status:
IS – Interim Stabilized
IP – Intrusion Prevention
R – Tank in Retrieval
RC – Tank Retrieval Completed

Table 4-1 Footnotes:

(1) C-106: Nominal Waste Volume: Total waste 2771 gallons; sludge 2686 gallons; supernatant 85 gallons (RPP-20577 Rev. 0 *Stage 2 Retrieval Data Report for Single-Shell Tank 241-C-106*).

(2) C-202: Nominal Waste Volume: Total waste 147 gallons; sludge 145 gallons; supernatant 2 gallons (RPP-RPT-29095 Rev. 0 *Demonstration Retrieval Data Report for Single-Shell Tank 241-C-202*).

(3) Hanford Federal Facility Agreement and Consent Order (signed August 2004) modified Milestone M-45-00C (Change Order M-45-04-01) changed the regulatory requirements for retrieval of waste in tanks S-103, S-105, and S-106. "Retrieval" status in these tanks is thereby rescinded.

(4) Tank A-101 contains retained gas in saltcake; tanks S-102, S-111, U-103, and U-109 contain retained gas in saltcake and sludge.

(5) C-203 Nominal Waste Volume: Total waste 139 gallons; sludge 126 gallons; supernatant 13 gallons (RPP-RPT-26475 Rev. 1 *Demonstration Retrieval Data Report for Single-Shell Tank 241-C-203*).

Table 4-1 Footnotes:

(6) Retrieval operations began in Tank S-102 on December 16, 2004, and were suspended in July 2007. Actions were subsequently taken to reduce the remaining liquid volume to below interim stabilization criteria. A letter was submitted to DOE on June 1, 2010, that stated Tank S-102 again met interim stabilization criteria. WRPS-1000772 R1, *Contract Number DE-AC27-08RV14800 – Washington River Protection Solutions LLC Transmittal of the Single-Shell Tank Interim Stabilization Evaluation Report for Tank 241-S-102*

(7) S-112: Nominal Waste Volume: Total waste 2387 gallons; sludge/saltcake 2263 gallons; supernatant 124 gallons (RRP-RPT-35112 Rev 0 *Retrieval Data Report for Single-Shell Tank 241-S-112*).

(8) C-201: Nominal Waste Volume: Total waste 144 gallons; sludge 142 gallons; supernatant 2 gallons (RPP-29441 Rev. 0 *Post-Retrieval Waste Volume Determination for Single-Shell Tank 241-C-201*).

(9) C-103: Nominal Waste Volume: Total waste 2529 gallons; sludge 2282 gallons; supernatant 247 gallons (RPP-RPT-33060 Rev. 0 *Demonstration Retrieval Data Report for Single-Shell Tank 241-C-103*).

(10) C-204 Nominal Waste Volume: Total waste 137 gallons; sludge 134 gallons; supernatant 3 gallons (RPP-RPT-34062 Rev. 0 *Demonstration Retrieval Data Report for Single-Shell Tank 241-C-204*).

(11) C-108: 2nd Quarter FY2010 Best-Basis Inventory update: 6800 gallons. The final estimate of 6.8 kilogallons includes 5.6 kilogallons of sludge solids and 1.2 kilogallons of sludge interstitial liquid.

(12) C-109: 3rd Quarter FY2008 Best-Basis Inventory update: 7800 gallons. Approximately 800 gallons of water was added to the tank while flushing transfer lines, leaving the final estimate to be 8600 gallons.

(13) C-110: WRPS Correspondence WRPS-0900077.2 *Contract Number DE-AC27-08RV14800 – Washington River Protection Solutions LLC Completion of Performance Based Incentive 2.2, Fee Bearing Milestone PBI-2.2.3, Complete Retrieval of Tank 241-C-110 – Request for Incremental Fee Approval,* declared that 17,200 gallons remained in tank 241-C-110 after retrieval operations came to a halt. This volume was determined from visual inspections of the tank and subsequent engineering calculations based on retrieval volumes.

(14) C-104: WRPS Correspondence WRPS-1102627, *Contract Number DE-AC27-08RV14800 – Washington River Protection Solutions LLC Completion of Performance Based Incentive 2.8, Fee Bearing Milestone PBI-2.8.1, "Complete Bulk Retrieval of Tank 241-C-104" – Request for Incremental Fee Approval*, declared that 4710 gallons remained in tank 241-C-104 after retrieval operations came to a halt. This volume was determined from volume displacement measurements and video evaluations of the tank after cessation of retrieval operations.

(15) C-111: Volume estimate: Total waste 32170 gallons remaining at the end of November 2010, according to a Retrieval & Closure status report email dated 12/14/2010.

Table 4-2. Single-Shell Tanks Interim Stabilization Status

Tank Number	Tank Integrity	Interim Stabilization Date (1)	Interim Stabilization Method	Tank Number	Tank Integrity	Interim Stabilization Date (1)	Interim Stabilization Method
A-101	SOUND	11/03	JET (4)	BY-107	ASMD LKR	07/79	JET
A-102	SOUND	08/89	SN	BY-108	ASMD LKR	02/85	JET
A-103	ASMD LKR	06/88	AR	BY-109	SOUND	07/97	JET
A-104	ASMD LKR	09/78	AR (3)	BY-110	SOUND	01/85	JET
A-105	ASMD LKR	07/79	AR	BY-111	SOUND	01/85	JET
A-106	SOUND	08/82	AR	BY-112	SOUND	06/84	JET
AX-101	SOUND	06/03	JET (4)	C-101	ASMD LKR	11/83	AR
AX-102	ASMD LKR	09/88	SN	C-102	SOUND	09/95	JET (2)
AX-103	SOUND	08/87	AR	C-103	SOUND	Retrieval Completed 8/26/06(4)	
AX-104	ASMD LKR	08/81	AR	C-104	SOUND	Retrieved to limit of technology 6/17/11	
B-101	ASMD LKR	03/81	SN	C-105	SOUND	10/95	AR
B-102	SOUND	08/85	SN	C-106	SOUND	Retrieval Completed 12/31/03	
B-103	ASMD LKR	02/85	SN	C-107	SOUND	09/95	JET
B-104	SOUND	06/85	SN	C-108	SOUND	Retrieved to limit of technology 4/27/07	
B-105	ASMD LKR	12/84	AR	C-109	SOUND	Retrieved to limit of technology 8/23/07	
B-106	SOUND	03/85	SN	C-110	ASMD LKR	Retrieved to limit of technology 4/27/09	
B-107	ASMD LKR	03/85	SN	C-111	ASMD LKR	03/84	SN
B-108	SOUND	05/85	SN	C-112	SOUND	09/90	AR
B-109	SOUND	04/85	SN	C-201	ASMD LKR	Retrieval Completed 03/23/06	
B-110	ASMD LKR	12/84	AR	C-202	ASMD LKR	Retrieval Completed 08/11/05	
B-111	ASMD LKR	06/85	SN	C-203	ASMD LKR	Retrieval Completed 03/24/05	
B-112	ASMD LKR	05/85	SN	C-204	ASMD LKR	Retrieval Completed 12/13/06	
B-201	ASMD LKR	08/81	AR (3)	S-101	SOUND	12/03	JET (4)
B-202	SOUND	05/85	AR (2)	S-102	SOUND	06/10	AR (4,5)
B-203	ASMD LKR	06/84	AR	S-103	SOUND	04/00	JET (4)
B-204	ASMD LKR	06/84	AR	S-104	ASMD LKR	12/84	AR
BX-101	ASMD LKR	09/78	AR (3)	S-105	SOUND	09/88	JET
BX-102	ASMD LKR	11/78	AR	S-106	SOUND	02/01	JET (4)
BX-103	SOUND	11/83	AR (2) (3)	S-107	SOUND	08/03	JET (4)
BX-104	SOUND	09/89	SN	S-108	SOUND	12/96	JET
BX-105	SOUND	03/81	SN	S-109	SOUND	06/01	JET (4)
BX-106	SOUND	07/95	SN	S-110	SOUND	01/97	JET
BX-107	SOUND	09/90	JET	S-111	SOUND	05/05	Jet (4)
BX-108	ASMD LKR	07/79	SN	S-112	SOUND	Retrieval Completed 3/2/07 (4)	
BX-109	SOUND	08/90	JET	SX-101	SOUND	08/03	JET (4)
BX-110	ASMD LKR	08/85	SN	SX-102	SOUND	08/03	JET (4)
BX-111	ASMD LKR	03/95	JET	SX-103	SOUND	05/03	JET (4)
BX-112	SOUND	09/90	JET	SX-104	ASMD LKR	04/00	JET (4)
BY-101	SOUND	05/84	JET	SX-105	SOUND	08/02	JET (4)
BY-102	SOUND	04/95	JET	SX-106	SOUND	05/00	JET (4)
BY-103	ASMD LKR	11/97	JET (2)	SX-107	ASMD LKR	10/79	AR
BY-104	SOUND	01/85	JET	SX-108	ASMD LKR	08/79	AR
BY-105	ASMD LKR	03/03	JET (4)	SX-109	ASMD LKR	05/81	AR
BY-106	ASMD LKR	12/03	JET (4)	SX-110	ASMD LKR	08/79	AR

Table 4-2. Single-Shell Tanks Interim Stabilization Status

Tank Number	Tank Integrity	Interim Stabilization Date (1)	Interim Stabilization Method	Tank Number	Tank Integrity	Interim Stabilization Date (1)	Interim Stabilization Method
SX-111	ASMD LKR	07/79	SN	TX-111	SOUND	04/83	JET
SX-112	ASMD LKR	07/79	AR	TX-112	SOUND	04/83	JET
SX-113	ASMD LKR	11/78	AR	TX-113	ASMD LKR	04/83	JET
SX-114	ASMD LKR	07/79	AR	TX-114	ASMD LKR	04/83	JET
SX-115	ASMD LKR	09/78	AR (3)	TX-115	ASMD LKR	09/83	JET
T-101	ASMD LKR	04/93	SN	TX-116	ASMD LKR	04/83	JET
T-102	SOUND	03/81	AR (2)(3)	TX-117	ASMD LKR	03/83	JET
T-103	ASMD LKR	11/83	AR	TX-118	SOUND	04/83	JET
T-104	SOUND	11/99	JET (4)	TY-101	ASMD LKR	04/83	JET
T-105	SOUND	06/87	AR	TY-102	SOUND	09/79	AR
T-106	ASMD LKR	08/81	AR	TY-103	ASMD LKR	02/83	JET
T-107	ASMD LKR	05/96	AR	TY-104	ASND KJR	11/83	AR
T-108	ASMD LKR	11/78	AR	TY-105	ASMD LKR	02/83	JET
T-109	ASMD LKR	12/84	AR	TY-106	ASMD LKR	11/78	AR
T-110	SOUND	01/00	JET (4)	U-101	ASMD LKR	09/79	AR
T-111	ASMD LKR	02/95	JET	U-102	SOUND	06/02	JET (4)
T-112	SOUND	03/81	AR (2)(3)	U-103	SOUND	09/00	JET (4)
T-201	SOUND	04/81	AR (3)	U-104	ASMD LKR	10/78	AR
T-202	SOUND	08/81	AR	U-105	SOUND	03/01	JET (4)
T-203	SOUND	04/81	AR	U-106	SOUND	03/01	JET (4)
T-204	SOUND	08/81	AR	U-107	SOUND	10/03	JET (4)
TX-101	SOUND	02/84	AR	U-108	SOUND	03/04	JET (4)
TX-102	SOUND	04/83	JET	U-109	SOUND	04/02	JET (4)
TX-103	SOUND	08/83	JET	U-110	ASMD LKR	12/84	AR
TX-104	SOUND	09/79	SN	U-111	SOUND	06/03	JET (4)
TX-105	ASMD LKR	04/83	JET	U-112	ASMD LKR	09/79	AR
TX-106	SOUND	06/83	JET	U-201	SOUND	08/79	AR
TX-107	ASMD LKR	10/79	AR	U-202	SOUND	08/79	SN
TX-108	SOUND	03/83	JET	U-203	SOUND	08/79	AR
TX-109	SOUND	04/83	JET	U-204	SOUND	08/79	SN
TX-110	ASMD LKR	04/83	JET				

Table 4-2 Legend:

AR	Administratively Interim Stabilized
JET	Saltwell Jet Pumped to Remove Drainable Interstitial Liquid
SN	Supernatant Pumped (Non-Jet Pumped)
ASMD LKR	Assumed Leaker

Interim Stabilized Single-Shell Tanks	149
Total Single-Shell Tanks	149

Table 4-2 Footnotes:

(1) These dates indicate when the tanks were actually interim stabilized. In some cases, the official interim stabilization documents were issued at a later date.

Table 4-2 Footnotes:

(2) Although tanks 241-BX-103, T-102, and T-112 met the interim stabilization administrative procedure at the time they were stabilized, they no longer meet the updated administrative procedure. The tanks were re-evaluated in 1996 and a letter was issued to DOE-RL recommending that no further pumping be performed on these tanks, based on an economic evaluation. In February 2000, it was determined that five tanks no longer met the stabilization criteria (241-BX-103, T-102, and T-112 exceed the supernatant criteria, and BY-103 and C-102 exceed the Drainable Interstitial Liquid [DIL]criteria).

An intrusion investigation was completed on tank 241-B-202 in 1996 and it was determined that this tank no longer meets the recently updated administrative procedure for 200 series tanks.

(3) Original interim stabilization data are missing on four tanks: 241-B-201, T-102, T-112, and T-201. In February 2001, three additional tanks were added to those missing stabilization data: 241-A-104, BX-101, and SX-115.

(4) One of 29 single-shell tanks incorporated in Consent Decree CT-99-5076-EFS, dated September 29, 1999. Interim Stabilization completion notices for the single-shell tanks are provided in the following table. Stabilized waste descriptions are provided in HNF-EP-0182, Revision 247.

Tank	Contractor Letter No.	Notification Letter Date	USDOE/ORP Letter No.	Notification Letter Date
A-101	CH2M-0302326.2	06/30/2004	04-TOD-040	07/01/2004
AX-101	CH2M-0302326.1	01/19/2004	03-TOD-047	07/09/2003
BY-105	CH2M-0301258	03/25/2003	03-TPD-041	04/28/2003
BY-106	CH2M-0304871.1	06/30/2005	05-TOD-049	07/06/2005
C-103	CH2M-0300891.1	08/13/2003	03-TOD-058	08/21/2003
S-101	CH2M-0304870.1	04/30/2004	04-TOD-033	05/10/2004
S-102	CH2M-0502948 CH2M-0502948 R1 WRPS-1000772 R1	09/29/2005 12/20/2005 06/01/2010	06-TOD-020	03/31/2006
S-103	CHG-0001990	04/18/2000	00-OSD-086	07/31/2000
S-106	CHG-0100762	02/12/2001	01-OPD-019	03/06/2001
S-107	CH2M-0303283.1	02/04/2004	04-TOD-017	03/17/2004
S-109	CHG-0103192	06/16/2001	01-OMD-008	07/11/2001
S-111	CH2M-0303290.4 CH2M-0303290.5	05/26/2005 06/09/2005	05-TOD-041	06/10/2005
S-112	CH2M-0403993 CH2M-0403993.1	12/27/2004 06/29/2005	05-TOD-050	07/06/2005
SX-101	CH2M-0300345.2	08/22/2003	03-TOD-066	09/04/2003
SX-102	CH2M-0303290.3	08/04/2004	04-TOD-058	08/12/2004
SX-103	CH2M-0204339.1	06/13/2003	03-TOD-042	06/30/2003
SX-104	CHG-0001991	04/26/2000	00-OSD-086	07/31/2000
SX-105	CHG-0203745	08/20/2002	02-OMD-066	09/12/2002
SX-106	CHG-0002454	05/05/2000	00-OSD-086	07/31/2000
T-104	LMHC-9958640	11/19/1999	00-ORL-034	03/14/2000
T-110	CHG-0059091	01/27/2000	00-ORL-034	03/14/2000
U-102	CHG-0202901	06/28/2002	01-OMD-037 02-OMD-066	09/27/2001 09/12/2002
U-103	CHG-0004512	09/11/2000	00-OSD-134	10/31/2000
U-105	CHG-0003827.1	04/05/2001	01-OPD-047	05/17/2001
U-106	CHG-0100083.1	03/28/2001	01-OPD-038	04/06/2001
U-107	CH2M-0303290.2	01/19/2004	04-TOD-004	01/29/2004
U-108	CH2M-0400855.1	09/08/2004	04-TOD-065	09/14/2004
U-109	CHG-0202630	06/20/2002	01-OMD-037	09/27/2001
U-111	CH2M-0302576	07/14/2003	03-TOD-051	07/30/2003

Table 4-2 Footnotes:

(5) Retrieval operations began in Tank S-102 on December 16, 2004, and were suspended in July 2007. Actions were subsequently taken to reduce the remaining liquid volume to below interim stabilization criteria. A letter was submitted to DOE on June 1, 2010, that stated Tank S-102 again met interim stabilization criteria. WRPS-1000772 R1, *Contract Number DE-AC27-08RV14800 – Washington River Protection Solutions LLC Transmittal of the Single-Shell Tank Interim Stabilization Evaluation Report for Tank 241-S-102.*

Table 4-3. Single-Shell Tank Leak Volume Estimates

Tank Number	Assumed Leaker (3)	Estimated Leak Volume Gallons (2)	Interim Stabilized (9)	Leak Estimate	
				Updated	Reference
241-A-103 (14)	1987	5500 (7)	06/88	1987	(j)
241-A-104 (14)	1975	500 to 2500	09/78	1983	(a)(p)
241-A-105 (1)(14)	1963	10000 to 270000	07/79	1991	(b)(c)
241-AX-102 (14)	1988	3000 (7)	09/88	1989	(h)
241-AX-104 (14)	1977	-- (6)	08/81	1989	(g)
241-B-101	1974	-- (6)	03/81	1989	(g)
241-B-103	1978	-- (6)	02/85	1989	(g)
241-B-105	1978	-- (6)	12/84	1989	(g)
241-B-107	1980	8000 (7)	03/85	1986	(d)(f)
241-B-110	1981	10000 (7)	03/85	1986	(d)(f)
241-B-111	1978	-- (6)	06/85	1989	(g)
241-B-112	1978	2000	05/85	1989	(g)
241-B-201	1980	1200 (7)	08/81	1984	(e)(f)
241-B-203	1983	300 (7)	06/84	1986	(d)
241-B-204	1984	400 (7)	06/84	1989	(g)
241-BX-101	1972	-- (6)	09/78	1989	(g)
241-BX-102	1971	70000	11/78	1986	(d)
241-BX-108	1974	2500	07/79	1986	(d)
241-BX-110	1976	-- (6)	08/85	1989	(g)
241-BX-111	1984 (11)	-- (6)	03/95	1993	(g)
241-BY-103	1973	<5000	11/97	1983	(a)
241-BY-105	1984	-- (6)	03/03	1989	(g)
241-BY-106	1984	-- (6)	N/A	1989	(g)
241-BY-107	1984	15100 (7)	07/79	1989	(g)
241-BY-108	1972	<5000	02/85	1983	(a)
241-C-101 (13)	1980	20000 (7)(8)	11/83	1986	(d)(f)
241-C-110 (13)	1984	2000	05/95	1989	(g)
241-C-111 (13)	1968	5500 (7)	03/84	1989	(g)
241-C-201 (4)	1988	550	03/82	1987	(i)
241-C-202 (4)	1988	450	08/81	1987	(i)
241-C-203	1984	400 (7)	03/82	1986	(d)
241-C-204 (4)	1988	350	09/82	1987	(i)
241-S-104	1968	24000 (7)	12/84	1989	(g)
241-SX-104 (15)	1988	6000 (7)	04/00	1988	(k)
241-SX-107 (15)	1964	<5000	10/79	1983	(a)
241-SX-108 (5)(12)(15)	1962	2400 to 35000	08/79	1991	(l)(p)(s)
241-SX-109 (5)(12)(15)	1965	<10000	05/81	1992	(m)(s)
241-SX-110 (15)	1976	5500 (7)	08/79	1989	(g)(f)
241-SX-111 (12)(15)	1974	500 to 2000	07/79	1986	(d)(s)
241-SX-112 (12)(15)	1969	30000	07/79	1986	(d)(s)
241-SX-113 (15)	1962	15000	11/78	1986	(d)
241-SX-114 (15)	1972	-- (6)	07/79	1989	(g)
241-SX-115 (15)	1965	50000	09/78	1992	(n)
241-T-101	1992	7500 (7)	04/93	1992	(o)
241-T-103	1974	<1000 (7)	11/83	1989	(g)
241-T-106	1973	115000 (7)	08/81	1986	(d)(f)
241-T-107	1984	-- (6)	05/96	1989	(g)
241-T-108	1974	<1000 (7)	11/78	1980	(f)
241-T-109	1974	<1000 (7)	12/84	1989	(g)

Table 4-3. Single-Shell Tank Leak Volume Estimates

Tank Number	Assumed Leaker (3)	Estimated Leak Volume Gallons (2)	Interim Stabilized (9)	Leak Estimate	
				Updated	Reference
241-T-111	1979, 1994 (10)	<1000 (7)	02/95	1994	(f)(r)
241-TX-105	1977	-- (6)	04/83	1989	(g)
241-TX-107 (5)	1984	2500	10/79	1986	(d)
241-TX-110	1977	-- (6)	04/83	1989	(g)
241-TX-113	1974	-- (6)	04/83	1989	(g)
241-TX-114	1974	-- (6)	04/83	1989	(g)
241-TX-115	1977	-- (6)	09/83	1989	(g)
241-TX-116	1977	-- (6)	04/83	1989	(g)
241-TX-117	1977	-- (6)	03/83	1989	(g)
241-TY-101(16)	1973	<1000 (7)	04/83	1980	(f)
241-TY-103(16)	1973	3000	02/83	1986	(d)
241-TY-104(16)	1981	1400 (7)	11/83	1986	(d)
241-TY-105(16)	1960	35000	02/83	1986	(d)
241-TY-106(16)	1959	20000	11/78	1986	(d)
241-U-101	1959	30000	09/79	1986	(d)
241-U-104	1961	55000	10/78	1986	(d)
241-U-110	1975	5000 to 8100 (7)	12/84	1986	(d)(f)(p)
241-U-112	1980	8500 (7)	09/79	1986	(d)(f)
67 Tanks					

Table 4-3 Footnotes:

(1) Current estimates [see Reference (b)] are that 610 Kilogallons of cooling water was added to tank A-105 from November 1970 to December 1978 to aid in evaporative cooling. In accordance with Dangerous Waste Regulations [Washington Administrative Code 173-303-070 (2)(a)(ii), as amended, Washington State Department of Ecology, 1990, Olympia, Washington], any of this cooling water that has been added and subsequently leaked from the tank must be classified as a waste and should be included in the total leak volume. In August 1991, the leak volume estimate for this tank was updated in accordance with the WAC regulations. Previous estimates excluded the cooling water leaks from the total leak volume estimates because the waste content (concentration) in the cooling water which leaked should be much less than the original liquid waste in the tank (the sludge is relatively insoluble). The total leak volume estimate in this report (10 to 277 Kilogallons) is based on the following (see References):

a. Reference (b) contains an estimate of 5 to 15 Kilogallons for the initial leak prior to August 1968.

Reference (b) contains an estimate of 5 to 30 Kilogallons for the leak while the tank was being sluiced from August 1968 to November 1970.

Reference (b) contains an estimate of 610 Kilogallons of cooling water added to the tank from November 1970 to December 1978, but it was estimated that the leakage was small during this period. This reference contains the statement "Sufficient heat was generated in the tank to evaporate most, and perhaps nearly all, of this water." This results in a low estimate of zero gallons leakage from November 1970 to December 1978.

b. Reference (c) contains an estimate that 378 to 410 Kilogallons evaporated out of the tank from November 1970 to December 1978. Subtracting the minimum evaporation estimate from the cooling water added estimate provides a range from 0 to 232 Kilogallons of cooling water leakage from November 1970 to December 1978.

	Low Estimate	High Estimate
Prior to August 1968	5,000	15,000
August 1968 to November 1970	5,000	30,000
November 1970 to December 1978	0	232,000
Totals	10,000	277,000

Table 4-3 Footnotes:

(2) Tank leak volume estimates presented here are being updated as a result of tank leak volume assessments and review of tanks for retrieval/closure consideration. Tank leak volume estimates presented here do not include (with some exceptions), such things as: (a) cooling/raw water leaks, (b) intrusions (rain infiltration) and subsequent leaks, (c) leaks inside the tank farm but not through the tank liner (surface leaks, pipeline leaks, leaks at the joint for the overflow or fill lines, etc.), and (d) leaks from catch tanks, diversion boxes, encasements, etc.

(3) In many cases, a leak was suspected long before it was identified or confirmed. For example, Reference (d) shows that tank U-104 was suspected of leaking in 1956. The leak was confirmed in 1961. This report lists the "assumed leaker" date of 1961. Using present standards, tank U-104 would have been declared an assumed leaker in 1956. In 1984, the criteria designations of "suspected leaker," "questionable integrity," "confirmed leaker," "declared leaker," and "borderline and dormant" were merged into one category now reported as "assumed leaker." See Reference (f) for explanation of when, how long, and how fast some of the tanks leaked.

(4) The leak volume estimate date for these tanks is before the declared leaker date because the tank was in a suspected leaker or questionable integrity status; however, a leak volume had been estimated prior to the tank being reclassified.

(5) The increasing radiation levels in drywells and laterals associated with these three tanks could be indicating continuing leak or movement of existing radionuclides in the soil. There is no conclusive way to confirm these observations. (There are currently no functioning laterals and no plan to prepare them for use).

(6) Methods were used to estimate the leak volumes from these 19 tanks based on the assumption that their cumulative leakage is approximately the same as for 18 of the 24 tanks identified in footnote (9). For more details see Reference (g). The total leak volume estimate for these tanks is 150 Kilogallons (rounded to the nearest Kilogallon), for an average of approximately 8 Kilogallons for each of 19 tanks.

(7) Leak volume estimate is based solely on observed liquid level decreases in these tanks. This is considered to be the most accurate method for estimating leak volumes.

(8) Tank C-101 experienced a liquid level decrease in the late 1960s and was taken out of service and pumped to a minimum heel in December 1969. In 1970, the tank was classified as a "questionable integrity" tank. Liquid level data show decreases in level throughout the 1970s and the tank was saltwell pumped during the 1970s, ending in April 1979. The tank was reclassified as a "confirmed leaker" in January 1980. See References (p) and (q); refer to Reference (q) for information on the potential for there to have been leaks from other C-farm tanks (specifically, C-102, C-103, and C-109).

(9) These dates indicate when the tanks were declared to be interim stabilized. In some cases, the official interim stabilization documents were issued at a later date. Also, in some cases, the field work associated with interim stabilization was completed at an earlier date.

(10) Tank T-111 was declared an "assumed re-leaker" on February 28, 1994, due to a decreasing trend in surface level measurement. This tank was pumped, and interim stabilization completed on February 22, 1995.

(11) Tank BX-111 was declared an "assumed re-leaker" in April 1993. Preparations for pumping were delayed, following an administrative hold placed on all tank farm operations in August 1993. Pumping resumed and the tank was declared interim stabilized on March 15, 1995.

(12) The leak volume and curie release estimates on tanks SX-108, SX-109, SX-111, and SX-112 have been re-evaluated using a Historical Leak Model [see Reference (s)]. In general, the model estimates are much higher than the values listed in the table, both for volume and curies released. The values listed in the table do not reflect this revised estimate because, "In particular, it is worth emphasizing that this report was never meant to be a definitive update for the leak baseline at the Hanford Site. It was rather meant to be an attempt to view the issue of leak inventories with a new and different methodology." (This quote is from the first page of the referenced report).

Table 4-3 Footnotes:

(13) Leaks from Tanks C-101, C-110, and C-111 were re-assessed in RPP-ENV-33418 Rev. 1 *Hanford C-Farm Leak Assessments Report: 241-C-101, 241-C-110, 241-C-111, 241-C-105, and Unplanned Waste Releases*. Revised leak volumes presented in the report have not yet been adopted pending completion of formal leak assessments of tanks C-105, C-110, and C-111 using the TFC-ENG-CHEM-D-42 Tank Leak Assessment Process.

A reevaluation of the Tank C-105 leak integrity using the TFC-ENG-CHEM-D-42 Tank leak Assessment Process was completed in May 2010, concluding that a leak from the tank could not be ruled out by the evidence from recently completed Direct Push C7469 and other available data, and recommending that the leak integrity status be revised to "Assumed Leaker." The estimated leak volume was < 2,000 gallons. RPP-ASMT-46452, Rev. 0 *Tank 241-C-105 Leak Assessment Completion Report.*

A reevaluation of the Tank C-110 leak integrity using the TFC-ENG-CHEM-D-42 Tank Leak Assessment Process was completed in July 2008, concluding that it is unlikely that the tank leaked, and recommending that the leak integrity status be revised to "Sound". RPP-ASMT-38219, Rev. 0 *Tank 241-C-110 Leak Assessment Report.*

A reevaluation of the Tank C-111 leak integrity using the TFC-ENG-CHEM-D-42 Tank Leak Assessment Process was completed in September 2008, concluding that it is unlikely that the tank leaked, and recommending that the leak integrity status be revised to "Sound". RPP-ASMT-39155, Rev. 0 *Tank 241-C-111 Leak Assessment Report.*

(14) Leaks from Tanks A-103, A-104, A-105, AX-102, and AX-104 were re-assessed in RPP-ENV-37956 Rev. 1, *Hanford A and AX Farm Leak Assessments Report:241-A-103, 241-A-104, 241-A-105, 241-AX-102, 241-AX-104 and Unplanned Waste Releases.* Revised leak volumes presented in the report have not yet been adopted pending completion of formal leak assessments of tanks A-103, AX-102, and AX-104 using the TFC-ENG-CHEM-D-42 Tank Leak Assessment Process.

A reevaluation of the Tank A-103 leak integrity using the TFC-ENG-CHEM-D-42 Tank Leak Assessment Process was completed in September 2009, concluding that it is unlikely that the tank leaked, and recommending that the leak integrity status be revised to "Sound". RPP-ASMT-42278, Rev. 0 *Tank 241-A-103 Leak Assessment Report.*

(15) Leaks from Tanks SX-104, SX-107, SX-108, SX-109, SX-110, SX-111, SX-112, SX-113, SX-114, and SX-115 were re-assessed in RPP-ENV-39658 Rev. 0, *Hanford SX-Farm Leak Assessments Report*. Revised leak volumes presented in the report have not been adopted pending completion of formal leak assessments of tanks SX-104 and SX-110 using the TFC-ENG-CHEM-D-42 Tank Leak Assessment Process.

A reevaluation of the Tank SX-110 leak integrity using the TFC-ENG-CHEM-D-42 Tank Leak Assessment Process was completed in October 2010, concluding that it is unlikely that the tank leaked, and recommending that the leak integrity status be revised to "Sound". RPP-ASMT-47140, Rev. 0 *Tank 241-SX-110 Leak Assessment Report.*

A reevaluation of the Tank SX-104 leak integrity using the TFC-ENG-CHEM-D-42 Tank Leak Assessment Process was completed in January 2011, concluding that it is unlikely that the tank leaked, and recommending that the leak integrity status be revised to "Sound". RPP-ASMT-48138, Rev. 0 *Tank 241-SX-104 Leak Assessment Completion Report.*

(16) Leaks from Tanks TY-101, TY-103, TY-104, TY-105, and TY-106 were re-assessed in RPP-RPT-42296 Rev. 0, *Hanford TY-Farm Leak Assessments Report.* Revised leak volumes presented in the report have not been adopted pending completion of a formal leak assessment of tank TY-101 using the TFC-ENG-CHEM-D-42 Tank Leak Assessment Process.

Table 4-3 References:

(a) Murthy, K. S., et al., June 1983, *Assessment of Single-Shell Tank Residual Liquid Issues at Hanford Site, Washington*, PNL-4688, Pacific Northwest Laboratory, Richland, Washington

(b) WHC, 1991a, *Tank 241-A-105 Leak Assessment*, WHC-MR-0264, Westinghouse Hanford Company, Richland, Washington

(c) WHC, 1991b, *Tank 241-A-105 Evaporation Estimate 1970 Through 1978*, WHC-EP-0410, Westinghouse Hanford Company, Richland, Washington

Table 4-3 References:

(d) Smith, D. A., January 1986, *Single-Shell Tank Isolation Safety Analysis Report*, SD-WM-SAR-006, Rev. 1, Rockwell Hanford Operations, Richland, Washington

(e) McCann, D. C., and T. S. Vail, September 1984, *Waste Status Summary*, RHO-RE-SR-14, Rockwell Hanford Operations, Richland, Washington

(f) Catlin, R. J., March 1980, *Assessment of the Surveillance Program of the High-Level Waste Storage Tanks at Hanford*, Office of Environmental Compliance and Review, for the U.S. Department of Energy, Washington D.C.

(g) Baumhardt, R. J., May 15, 1989, Letter to R. E. Gerton, U.S. Department of Energy-Richland Operations Office, *Single-Shell Tank Leak Volumes*, 8901832B R1, Westinghouse Hanford Company, Richland, Washington; and Jensen, L. and Merril, J.A., March 28, 1989, Internal Letter to R.E. Raymond, *Estimation of Single Shell Tank Leak Volumes*, 12710-89-042, Westinghouse Hanford Company, Richland, Washington

(h) WHC, 1990a, Occurrence Report, *Surface Level Measurement Decrease in Single-Shell Tank 241-AX-102,* WHC-UO-89-023-TF-05, Westinghouse Hanford Company, Richland, Washington

(i) Groth, D. R., July 1, 1987, Internal Memorandum to R. J. Baumhardt, *Liquid Level Losses in Tanks 241-C-201, -202 and -204*, 65950-87-517, Westinghouse Hanford Company, Richland, Washington

(j) Groth, D. R., and G. C. Owens, May 15, 1987, Internal Memorandum to J. H. Roecker, *Tank 103-A Integrity Evaluation*, Rockwell Hanford Operations, Richland, Washington

(k) Dunford, G. L., July 8, 1988, Internal Memorandum to R. K. Welty, *Engineering Investigation: Interstitial Liquid Level Decrease in Tank 241-SX-104*, 13331-88-416, Westinghouse Hanford Company, Richland, Washington

(l) WHC, 1992a, *Tank 241-SX-108 Leak Assessment*, WHC-MR-0300, Westinghouse Hanford Company, Richland, Washington

(m) WHC, 1992b, *Tank 241-SX-109 Leak Assessment*, WHC-MR-0301, Westinghouse Hanford Company, Richland, Washington

(n) WHC, 1992c, *Tank 241-SX-115 Leak Assessment*, WHC-MR-0302, Westinghouse Hanford Company, Richland, Washington

(o) WHC, 1992d, Occurrence Report, *Apparent Decrease in Liquid Level in Single Shell Underground Storage Tank 241-T-101, Leak Suspected; Investigation Continuing*, RL-WHC-TANKFARM-1992-0073, Westinghouse Hanford Company, Richland, Washington

(p) WHC,1990b, *A History of the 200 Area Tank Farms*, WHC-MR-0132, Westinghouse Hanford Company, Richland, Washington

(q) WHC, 1993, *Assessment of Unsaturated Zone Radionuclide Contamination Around Single-Shell Tanks 241-C-105 and 241-C-106, WHC-SD-EN-TI-185,* REV OA, Westinghouse Hanford Company, Richland, Washington

(r) WHC, 1994, Occurrence Report, *Apparent Liquid Level Decrease in Single Shell Underground Storage Tank 241-T-111; Declared an Assumed Re-Leaker*, RL-WHC-TANKFARM-1994-0009, Westinghouse Hanford Company, Richland, Washington

(s) HNF, 1998, Agnew, S. F., and R. A. Corbin, August 1998, *Analysis of SX Farm Leak Histories - Historical Leak Model* (HLM), HNF-3233, Rev. 0, Los Alamos National Laboratory, Los Alamos, New Mexico

5.0 MISCELLANEOUS UNDERGROUND STORAGE TANKS AND SPECIAL SURVEILLANCE FACILITIES

Table 5-1. East and West Area Miscellaneous Underground Storage Tanks and Special Surveillance Facilities (1).

Facility	Location	Receives Waste From:	Waste (Gallons)	Monitored By:	Remarks
EAST AREA					
204-AR	W of A Farm Complex	Liquid waste from 100-Area, 300-Area Rail and Truck Tankers	290	SACS/WTF/Manual	Out of service (9)
209-E-TK-111	209 E Bldg.	Decon Catch Tank	Unknown	NM	Removed from service 1988
241-A-302-A	A Farm	A-151 DB	661	SACS/ENRAF/TMACS	
241-A-302-B	A Farm	A-152 DB	6265	SACS/MT	Isolated 1985, Project B-138, Interim Stabilized 1990, rain intrusion
241-AX-151 (5 tanks)	N. of PUREX	PUREX	Unknown	NM	Isolated 1985 (8)
241-AX-152	AX Farm	AX-152 DB	26	SACS/MT	Declared Assumed Leaker, pumped to AY-102, 3/01, no longer being used
241-AZ-151	AZ Farm	AZ-702 Condensate	1399	SACS/ENRAF/TMACS	Out-of-service 6/05. Isolated 6/06. (M-48-07)
241-AZ-154	AZ Farm		25	Zip Cord	Not monitored after 05/06
241-AZ-301 (11)	AZ Farm	AZ-702 Condensate	N/A	SACS/ENRAF/TMACS	Volume changes daily - pumped to AY-101 as needed
241-B-301-B	B Farm	B-151, 152, 153, 252 DB	22250	NM	Isolated 1985 (2)
241-B-302-B	B Farm	B-154 DB	4930	NM	Isolated 1985 (2)
241-BX-302-A	BX Farm	BR-152, BX-153, BXR-152, BYR-152 DB	840	NM	Isolated 1985 (2)
241-BX-302-B	BX Farm	BX-154 DB	1040	NM	Isolated 1985 (2)
241-BX-302-C	BX Farm	BX-155 DB	870	NM	Isolated 1985 (2)
241-BY-ITS2-TK 1	BY Farm	Vapor condenser	Unknown	NM	Isolated
241-BY-ITS2-TK 2	BY Farm	Heater Flush Tank	Unknown	NM	Stabilized 1977
241-C-301-C	C Farm	C-151, 152, 153, 252 DB	10470	NM	Isolated 1985 (2)
241-ER-311	B Plant	ER-151, ER-152 DB	Unknown	SACS/ENRAF/Manual	Declared Assumed Leaker 3/2006 (3)
241-ER-311A	SW of B Plant	ER-151 DB	Empty	NM	Abandoned in place 1954
244-AR Vault / TK-244-AR-001	A Complex	241-A and 241-AX farms	854	SACS/WTF/Manual	Stabilized 8/03 (12)
244-AR Vault / Sump-AR-001	A Complex	241-A and 241-AX farms	2	SACS/WTF/Manual	Stabilized 8/03 (12)
244-AR Vault / TK-244-AR-002	A Complex	241-A and 241-AX farms	2274	SACS/WTF/Manual	Stabilized 8/03 (12)
244-AR Vault / Sump-AR-002	A Complex	241-A and 241-AX farms	2	SACS/WTF/Manual	Stabilized 8/03 (12)
244-AR Vault / TK-244-AR-003	A Complex	241-A and 241-AX farms	227	SACS/WTF/Manual	Stabilized 8/03 (12)
244-AR Vault / Sump-AR-003	A Complex	241-A and 241-AX farms	2	SACS/WTF/Manual	Stabilized 8/03 (12)

Table 5-1. East and West Area Miscellaneous Underground Storage Tanks and Special Surveillance Facilities (1).

Facility	Location	Receives Waste From:	Waste (Gallons)	Monitored By:	Remarks
244-AR Vault / TK-244-AR-004	A Complex	241-A and 241-AX farms	94	SACS/WTF/Manual	Stabilized 8/03 (12)
244-A-TK/SMP	A Complex	DCRT - Receives from several farms	4670	SACS/WTF/MCS	WTF - Receives transfers and is pumped as needed
244-BX-TK/SMP	BX Complex		10970	SACS/MT	Out of Service 6/05. Isolated 6/06 (M-48-07)
241-A-350	A Farm	Collects drainage	460	SACS/WTF/MCS	WTF (uncorrected), pumped as needed
241-A-417	A Farm		1176	SACS/WTF/Manual	WTF
244-BXR Vault / TK-BXR-001	BX Farm	241-BX Farm and diversion boxes	7200	NM	Interim Stabilized 11/84 (13)
244-BXR-Vault / BXR-001 Sump	BX Farm	241-BX Farm and diversion boxes	15	NM	Interim Stabilized 11/84 (13)
244-BXR Vault / TK-BXR-002	BX Farm	241-BX Farm and diversion boxes	2180	NM	Interim Stabilized 02/85 (13)
244-BXR-Vault / BXR-002 Sump	BX Farm	241-BX Farm and diversion boxes	2235	NM	Interim Stabilized 02/85 (13)
244-BXR Vault / TK-BXR-003	BX Farm	241-BX Farm and diversion boxes	1810	NM	Interim Stabilized 02/85 (13)
244-BXR-Vault / BXR-003 Sump	BX Farm	241-BX Farm and diversion boxes	8329	NM	Interim Stabilized 02/85 (13)
244-BXR Vault / TK-BXR-011	BX Farm	241-BX Farm and diversion boxes	7100	NM	Interim Stabilized 02/85 (13)
244-BXR-Vault / BXR-011 Sump	BX Farm	241-BX Farm and diversion boxes	11625	NM	Interim Stabilized 02/85 (13)
244-CR-Vault/ SUMP-CR-011	C Farm	-	13	NM	(10)
244-CR Vault/TK-CR-011	C Farm	-	3990	NM	(10)
244-CR-Vault/ SUMP-CR-001	C Farm	-	22	NM	(10)
244-CR Vault/ TK-CR-001	C Farm	-	1375	NM	(10)
244-CR-Vault/ SUMP-CR-002	C Farm	-	11	NM	(10)
244-CR Vault/ TK-CR-002	C Farm	-	773	NM	(10)
244-CR-Vault/ SUMP-CR-003	C Farm	-	17	NM	(10)
244-CR Vault/ TK-CR-003	C Farm	Former 241-C Tank Farm Saltwell Receiver Tank	2146	SACS/ZIP CORD/Manual	Zip cord installed; MT removed; more accurate conversion table used (10)
WEST AREA					
213-W-TK-1	E. of 213-W Compactor Facility	Water Retention Tank	Unknown	NM	Contains only water
231-W-151-001	N. of Z Plant	231-Z Floor drains	Unknown	NM	Inactive, last data 1974
231-W-151-002	N. of Z Plant	231-Z Floor drains	Unknown	NM	Inactive, last data 1974
240-S-302	S Plant	240-S-151-DB	1660		Assumed Leaker, EPDA 85-04 (4)

Table 5-1. East and West Area Miscellaneous Underground Storage Tanks and Special Surveillance Facilities (1).

Facility	Location	Receives Waste From:	Waste (Gallons)	Monitored By:	Remarks
241-S-302A	S Farm	241-S-151-DB	0		Assumed Leaker TF-EFS-90-042
	Partially filled with grout 2/91, determined to be an Assumed Leaker after leak test. No surface level or intrusion readings obtainable. S-304 (active) replaced S-302				
241-S-302B	SX Farm	S Encasements	Empty	NM	Isolated 1985 (2)
241-S-304	S Farm	S-151 DB	1	SACS/ENRAF/Manual	Sump not alarming
241-SX-302	SX Farm	SX-151 DB, 151 TB	Unknown	NM	Isolated 1987
241-T-301	T Farm	DB T-151, 151, 153, 252	Unknown	NM	Isolated 1985 (T-301-B)
241-TX-302	TX Farm	TX-153 DB	Unknown	NM	Isolated 1985 (2)
241-TX-302B	E. of TX Farm	TX-155 DB	3312	SACS/ENRAF/TMACS	New ENRAF installed 9/02
241-TX-302-B(R)	E. of TX Farm	TX-155 DB	Unknown	NM	Isolated, replaced TX-302-B
241-TX-302C	T Plant	TX-154 DB	194	SACS/ENRAF/TMACS	
241-TX-302-X-B	TX Farm	TX Encasements	Unknown	NM	Isolated 1985 (2)
241-TY-302A	TY Farm	TX-153 DB	Unknown	NM	Isolated 1985 (2)
241-TY-302B	TY Farm	TY Encasements	Empty	NM	Isolated 1985 (2)
241-U-301B	U Farm	U-151, 152, 153, 252 DB	1438	SACS/ENRAF/Manual	Pumped to SY-101, 12/03
241-UX-302A	U Plant	UX-154	120	SACS/ENRAF/Manual	Catch Tank pumped in August 2009 (5)
241-Z-8	E. of Z Plant	Recuplex waste	Unknown	NM	Isolated, 1974, 1975
242-S TK C-100	242-S	Process Condensate	Unknown	NM	Process condensate receiver during 242-S Evaporator operation
242-T-135	T Evaporator	T Evaporator	Unknown	NM	Isolated
242-TA-R1	T Evaporator	Z Plant waste	Unknown	NM	Isolated
243-S-TK-1	NW of S Farm	Personnel Decon. Facility	Empty	NM	Isolated
244-S-TK/SMP	S Farm	From SSTs for transfer to SY-102	3955	SACS/WTF/Manual	WTF. Out of Service 6/05. Isolated 6/06. (TPA M-48-07)
244-TXR Vault/ Tank TK-TXR-001	TX Farm	Transfer lines, TXR-151 DB	4700	NM	Interim Stabilized, MT removed 1984 (2)
244-TXR Vault/ Sump TXR-001	TX Farm	Tank TK-TXR-001	11	NM	Interim Stabilized, MT removed 1984 (2)
244-TXR Vault/ Tank TK-TXR-002	TX Farm	Transfer lines	2945	NM	Interim Stabilized, MT removed 1984 (2)
244-TXR Vault/ Sump TXR-002	TX Farm	Tank TK-TXR-002	15	NM	Interim Stabilized, MT removed 1984 (2)
244-TXR Vault/ Tank TK-TXR-003	TX Farm	Transfer lines	6460	NM	Interim Stabilized, MT removed 1984 (2)
244-TXR Vault/ Sump TXR-003	TX Farm	Tank TK-TXR-003	27	NM	Interim Stabilized, MT removed 1984 (2)
244-TX-TK/SMP	TX Farm		7043	SACS/ENRAF	Received from 241-Z, tank D-5, 11/04
244-U –TK/SMP	U Farm	-	Unknown	NM	Never placed in service. Isolated 06/30/2006. May contain up to 10,000 gallons leak test raw water.

Table 5-1. East and West Area Miscellaneous Underground Storage Tanks and Special Surveillance Facilities (1).

Facility	Location	Receives Waste From:	Waste (Gallons)	Monitored By:	Remarks
244-UR Vault / Tank 244-UR-001	U Farm	Tank, Sump and Cell	2242	NM	Stabilized in November 1984 (14)
244-UR Vault/ UR-001 Sump	U Farm	Tank 244-UR-001	2112	NM	Stabilized in November 1983 (14)
244-UR Vault / Tank 244-UR-002	U Farm	Tank, Sump and Cell	2874	NM	Stabilized in July 1985 (14)
244-UR Vault / UR-002 Sump	U Farm	Tank 244-UR-002	40.25	NM	Stabilized in July 1985 (14)
244-UR Vault / Tank 244-UR-003	U Farm	Tank, Sump and Cell	1568	NM	Stabilized in July 1985 (14)
244-UR-Vault / UR-003 Sump	U Farm	Tank 244-UR-003	2008	NM	Stabilized in July 1985 (14)
244-UR Vault / Tank 244-UR-004	U Farm	Nitric Acid Storage	Empty	NM	(14)
241-EW-151 Vent Station Catch Tank		Cross Site Transfer Line	499	SACS/MT	MT. Rain intrusion, 1/03 (6)

Table 5-1 Legend:

DB, TB	Diversion Box, Transfer Box
DCRT	Double-Contained Receiver Tank
ENRAF, MT	Surface Level Measurement Devices
MCS	Monitor and Control System
Manual	Not connected to any automated system
MT	Manual Tape
NM	Not Monitored
O/S	Out of Service
SACS	Surveillance Automated Control System
TK, SMP	Tank, Sump
WTF	Weight Factor (can be recorded as WTF, WTF [uncorrected] or CWF [uncorrected])

Table 5-1 Footnotes:

(1) WHC-SD-WM-TI-356, Waste Storage Tank Status and Leak Detection Criteria, Rev. 0, September 30, 1988. Inactive Miscellaneous Underground Storage Tanks (IMUST) reflect only those tanks managed by Washington River Protection Solutions, LLC (WRPS).

(2) The volumes reported in the table for the 244-TXR Vault tanks and sumps are documented in RPP-RPT-42231, *Summary of Twenty-Five Miscellaneous Tanks Associated with the Single-Shell Tank System.*

(3) A leak assessment was performed because of the 0.5 inch liquid level decrease between early October 2005 and January 31, 2006. The leak assessment concluded that a tank leak was the most likely explanation for the level trend. The leak assessment report was issued on March 17, 2006. RPP-RPT-29163, Rev. 0, *Tank 241-ER-311 Leak Assessment Report.*

Solids volume in the tank is not known. Sample activities conducted during November, 1999 concluded that there were approximately 7 to 9" of solids beneath the east riser and no solids beneath the west riser (HNF-5985 Rev. 0 *ER-311 Flammable Gas Response and Findings*). The remaining liquid in the tank was evaporated to dryness between October 13, 2006 and February 15, 2007. A subsequent video inspection on March 17, 2007 indicated no remaining free liquid was present (07-TOD-026).

Table 5-1 Footnotes:

(4) A leak assessment was performed because of a steady, predictable liquid level decrease of ~ 0.33 inches/year since the early 1980's. The tank was designated as an "Assumed Leaker" in 1985, but had no record of a formal leak assessment. The leak assessment report was issued on October 10, 2007. RPP-ASMT-35057, Rev. 0, *Tank 240-S-302 Leak Assessment Report.*

A total of 6,265 gallons of supernatant was pumped from the tank between September 21, 2008 and September 28, 2008. A solids level of 14.12 inches (1,361 gallons) was measured with ENRAF™ densitometer on September 9, 2008. A post-pumping visual inspection showed a small 1 foot wide by 10 feet long pool of liquid centered beneath the pump, corresponding to less than 6 gallons of free liquid. The remaining volume is estimated to be 1,360 to 1,660 gallons, based on ENRAF and densitometer readings in different risers, and assuming that the solids are level across the tank.

(5) A leak assessment was performed because of the 0.7 inch level decrease between January 2004 and February 2006. The leak assessment concluded that a tank leak was the most likely explanation for the level trend. The leak assessment report was issued on May 12, 2006. RPP-RPT-29711, Rev. 0, *Tank 241-UX-302A Leak Assessment Report.*

Pumping of the remaining free liquid from the tank was completed October 25, 2006 (06-TOD-090). An estimated 75 to 110 gallons of sludge, and 10 gallons of free liquid remain in the tank (RPP-RPT-31779 Rev. 0 *241-UX-302A Catch Tank Liquid Mitigation Completion Report*).

Following additional liquid intrusion, the tank was pumped August 27, 2009, removing an estimated 270 gallons of free liquid. An estimated 80 gallons of sludge and less than 40 gallons of liquid remain in the tank (RPP-RPT-42789 Rev 0, *Completion of Removal of Pumpable Liquid From 241-UX-302A*). The estimate of 120 gallons is reported in the table.

(6) A leak assessment was performed because of a 1.25 inch liquid level decrease between July, 2006 and November, 2006. The leak assessment concluded that the level decrease was the result of evaporation from an operating exhauster connected to tank 241-ER-311. This was confirmed when the exhauster was shut down and the liquid level stabilized. The tank remains classified as a "sound" tank. The leak assessment report was issued on June 25, 2007. RPP-ASMT-33741, Rev. 0, *241-EW-151 Leak Assessment Report.*

(7) Following stabilization, the remaining volume of liquid in the tanks and sumps was estimated to total no more than 659 gallons; the volume of sludge <100 gallons (RPP-12051).

(8) 241-AX-151 consists of four 50 gallon diverter tanks (Tanks D – G) located in individual cells and the ~12,200 gallon capacity 241-AX-151-CT catch tank (stainless steel lined concrete vault and sump) receiving drainage from the pump pit and the four cells.

(9) 204-AR Customer Waste Unloading Facility includes a 1,500 gal catch tank enclosed in an stainless steel lined pit and pit sump; combined capacity of the catch tank and pit are 4,550 gallons (WHC-SC-WM-SAR-040 Rev. 1).

(10) 244-CR Vault contains two 40,000 gallon tanks CR-011 and CR-01, and two 15,000 gallon tanks CR-002 and CR-003 in individual cells. The contents of the 244-CR Vault cells were pumped to tank 241-C-104 during retrieval of tank 241-C-104. Pumping was completed on March 10, 2010 (RPP-RPT-45845, *Completion of Pumpable Liquids Removal from 244-CR Vault*). The completion letter was sent to the Office of River Protection on April 28, 2010 (WRPS-1000848, *Contract Number DE-AC27-08RV14800 – Washington River Protection Solutions LLC Completion Of Performance Based Incentive 1.5, Fee Bearing Milestone 1.5.1, Remove Liquids From The Secondary Containment Of The 244-CR Vault – Request For Incremental Fee Approval*). Tank volumes from RPP-RPT-24257, *244-CR Vault Liquid Level Assessment and Video Inspection Completion Report.*

(11) AZ-301 is an active part of the DST system.

(12) 244-AR Vault was interim stabilized in 2003, and the stabilization efforts were documented in RPP-12051, *244-AR Vault Interim Stabilization Report.* The waste volumes reported in the table are taken from that report. The tanks and cell sumps in the 244-AR Vault are monitored quarterly for signs of intrusion.

(13) The volumes reported in the table for the 244-BXR Vault tanks and sumps are documented in RPP-RPT-42231, *Summary of Twenty-Five Miscellaneous Tanks Associated with the Single-Shell Tank System.*

Table 5-1 Footnotes:

(14) The volumes reported in the table for the 244-UR Vault tanks and sumps are documented in RPP-RPT-42231, *Summary of Twenty-Five Miscellaneous Tanks Associated with the Single-Shell Tank System.* Records in the Waste Information Data System (WIDS) indicate that Tank 244-UR-004 did not contain radioactive material. It was used to stage nitric acid to the other 244-UR vault tanks during the Uranium Recovery Process in the 1950's.

APPENDIX A - TANK CONFIGURATION AND FACILITIES CHARTS

Figure A-1. Underground Waste Storage Tank Configurations

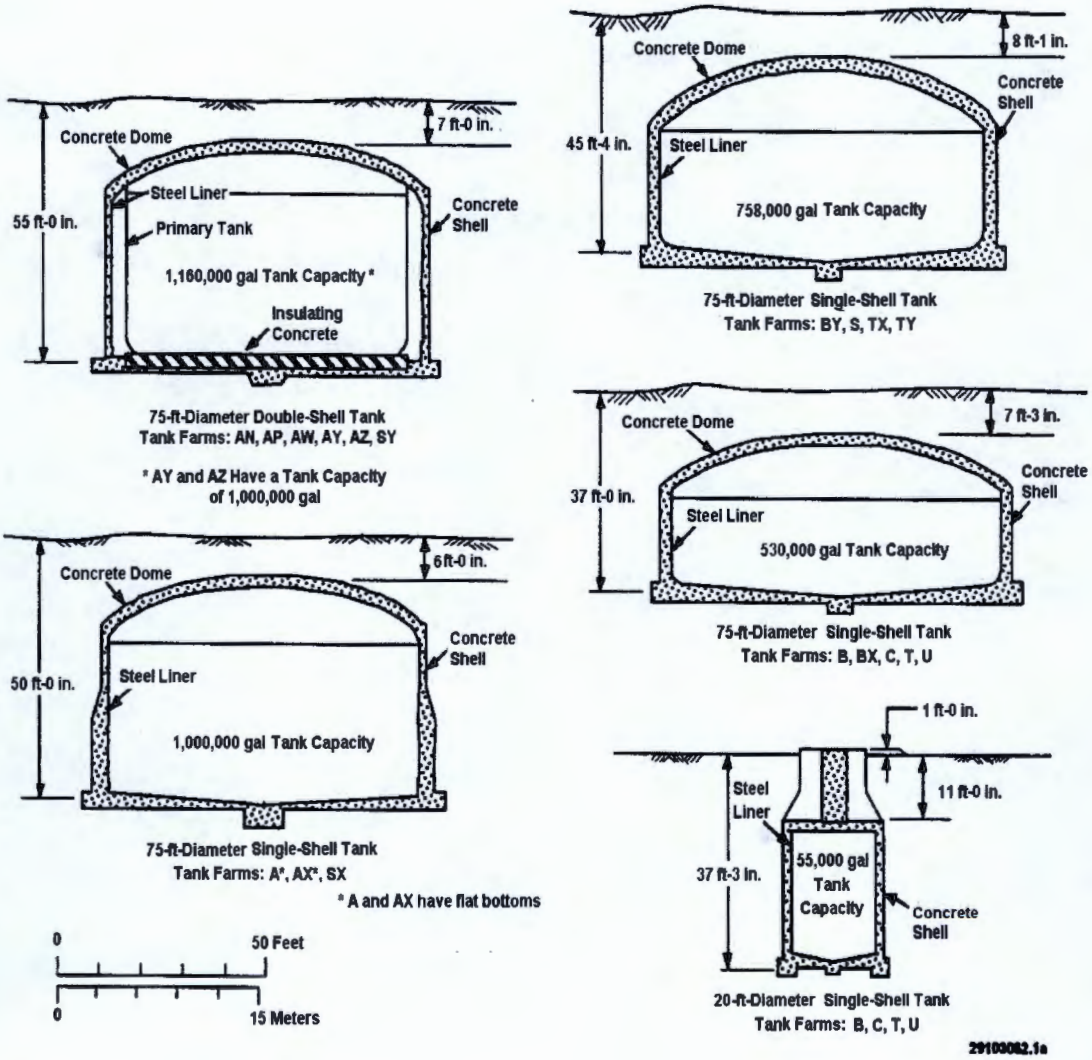

Figure A-2. Double-Shell Tank Instrumentation Configuration

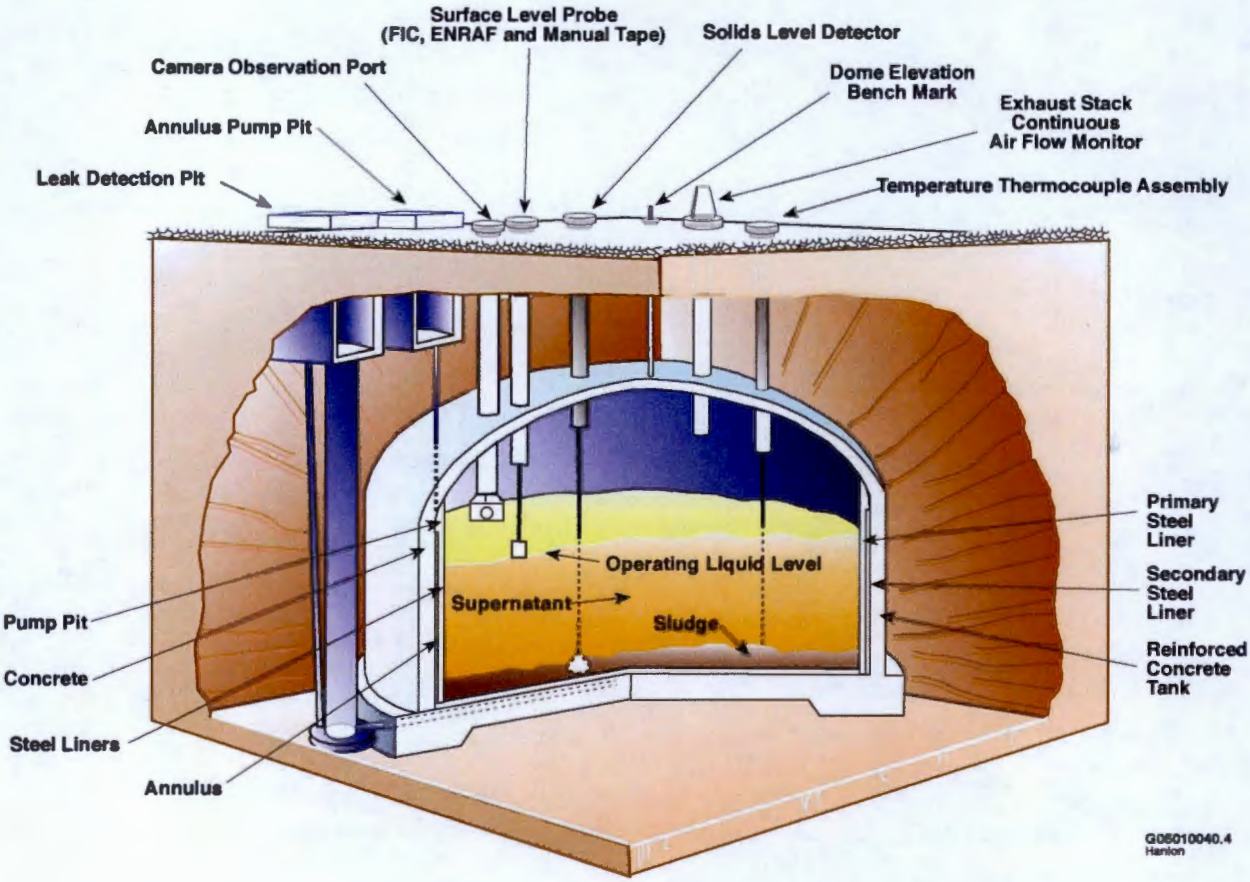

Figure A-3. Single-Shell Tank Instrumentation Configuration

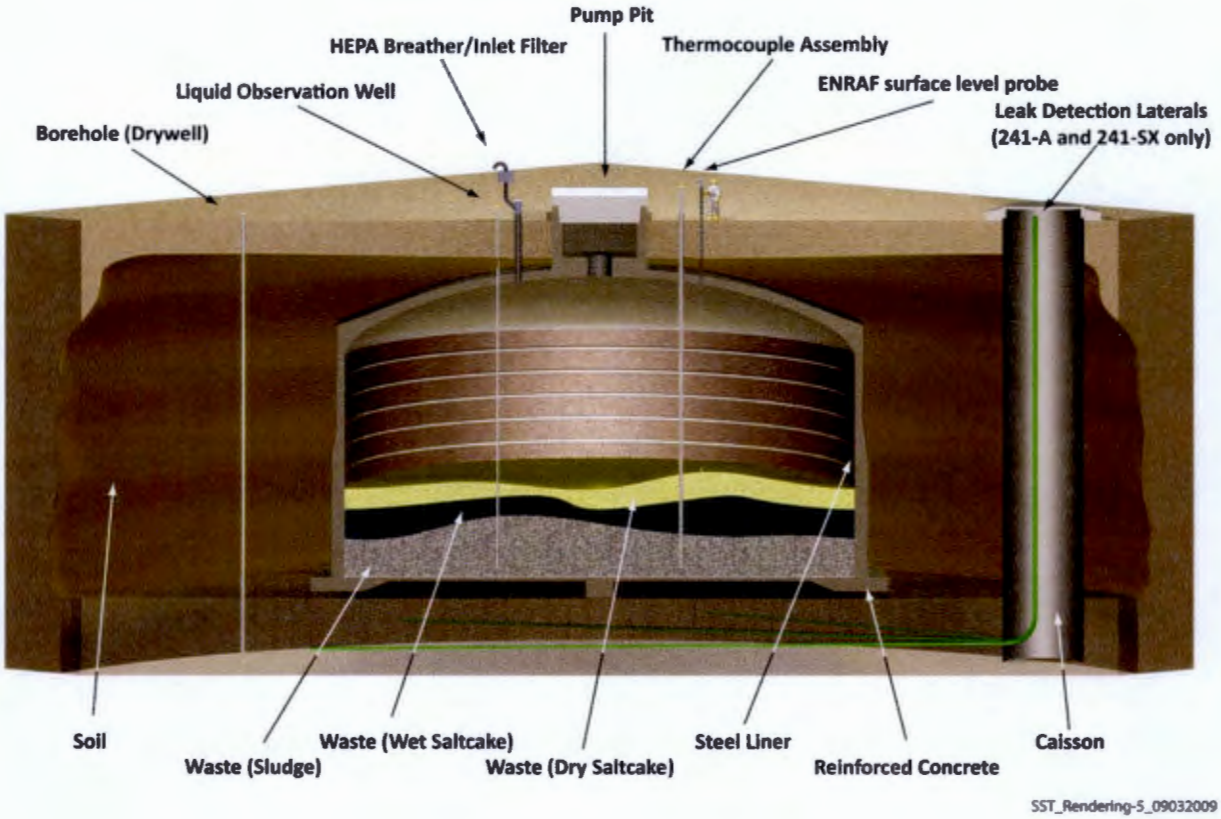

200 East Tank Waste Contents

A-Tank Farm- Constructed 1953-1955
6 @ 1,000 Kgal Tank Capacity, Single-Shell

Tank	Kgal Sludge	Saltcake	Supernatant
241-A-101	3	317	0
241-A-102	0	37	3
241-A-103 ■	2	372	4
241-A-104 ■	28	0	0
241-A-105 ■	37	0	0
241-A-106	50	29	0

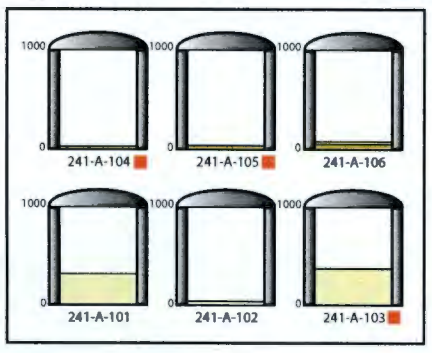

AN-Tank Farm- Constructed 1977-1980
7 @ 1,160 Kgal Tank Capacity, Double-Shell

Tank	Kgal Sludge	Saltcake	Supernatant
241-AN-101	255	31	544
241-AN-102	0	154	889
241-AN-103	0	486	474
241-AN-104	0	443	606
241-AN-105	0	536	588
241-AN-106	338	17	415
241-AN-107	0	241	844

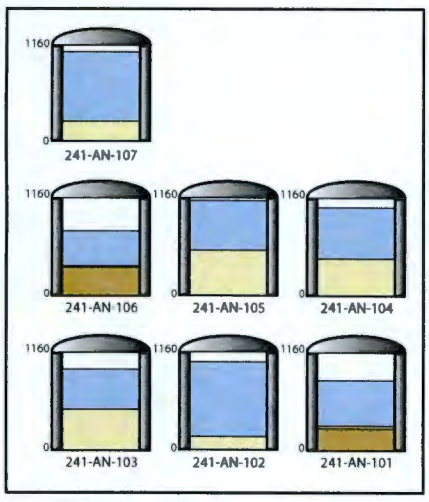

AP-Tank Farm- Constructed 1982-1986
6 @ 1,160 Kgal Tank Capacity, Double-Shell
2 @ 1,257 Kgal Tank Capacity, Double-Shell

Tank	Kgal Sludge	Saltcake	Supernatant
241-AP-101	0	0	1112
241-AP-102	28	0	1053
241-AP-103	0	52	1185
241-AP-104	0	18	430
241-AP-105	0	105	1032
241-AP-106	0	0	1136
241-AP-107	0	0	1106
241-AP-108	0	112	1132

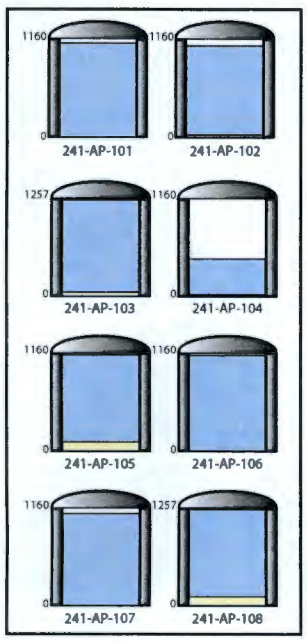

AW-Tank Farm- Constructed 1976-1980
6 @ 1,160 Kgal Tank Capacity, Double-Shell

Tank	Kgal Sludge	Saltcake	Supernatant
241-AW-101	0	396	737
241-AW-102	52	0	178
241-AW-103	280	40	767
241-AW-104	97	157	808
241-AW-105	248	0	160
241-AW-106	0	269	368

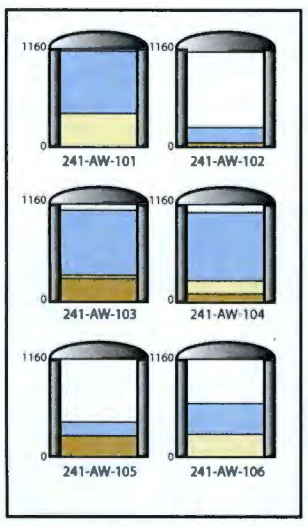

AX-Tank Farm- Constructed 1963-1965
4 @ 1,000 Kgal Tank Capacity, Single-Shell

Tank	Kgal Sludge	Saltcake	Supernatant
241-AX-101	3	355	0
241-AX-102 ■	6	24	0
241-AX-103	8	99	0
241-AX-104 ■	7	0	0

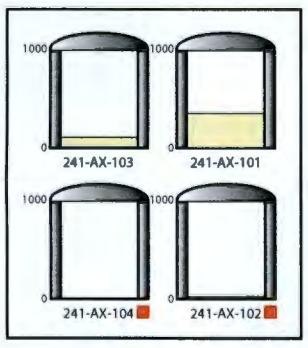

AY-Tank Farm- Constructed 1968-1970
2 @ 1,018 Kgal Tank Capacity, Double-Shell

Tank	Kgal Sludge	Saltcake	Supernatant
241-AY-101	105	0	788
241-AY-102	151	0	732

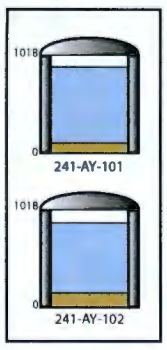

AZ-Tank Farm- Constructed 1970-1974
2 @ 1,018 Kgal Tank Capacity, Double-Shell

Tank	Kgal Sludge	Saltcake	Supernatant
241-AZ-101	52	0	870
241-AZ-102	105	0	804

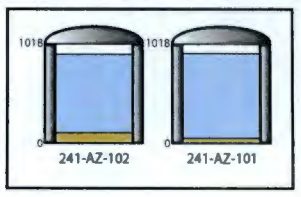

B-Tank Farm- Constructed 1943-1944
12 @ 530 Kgal Tank Capacity, Single-Shell
4 @ 55 Kgal Tank Capacity, Single-Shell

Tank	Kgal Sludge	Saltcake	Supernatant
241-B-101 ■	28	81	0
241-B-102	0	28	4
241-B-103 ■	1	55	0
241-B-104	309	65	0
241-B-105 ■	28	262	0
241-B-106	122	0	1
241-B-107 ■	86	75	0
241-B-108	27	65	0
241-B-109	50	76	0
241-B-110 ■	244	0	1
241-B-111 ■	241	0	1
241-B-112 ■	15	17	3
241-B-201 ■	29	0	0
241-B-202	28	0	0
241-B-203 ■	49	0	1
241-B-204 ■	49	0	1

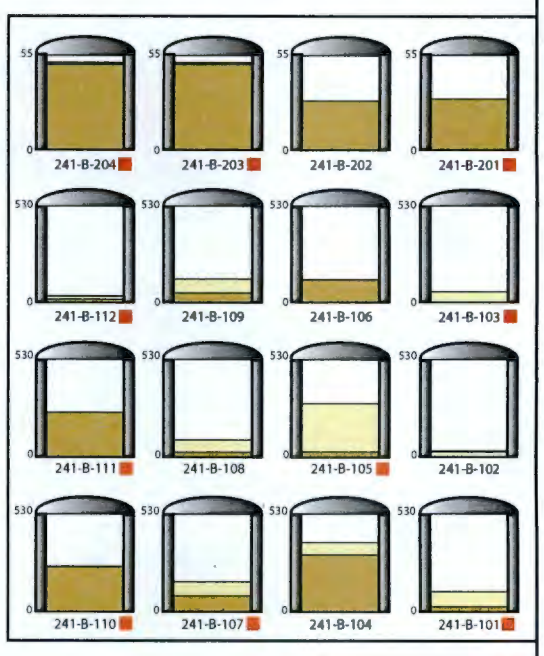

BX- Tank Farm- Constructed 1946-1947
12 @ 530 Kgal Tank Capacity, Single-Shell

Tank	Kgal Sludge	Saltcake	Supernatant
241-BX-101 ■	48	0	0
241-BX-102 ■	79	0	0
241-BX-103	62	0	13
241-BX-104	97	0	3
241-BX-105	42	25	5
241-BX-106	10	28	0
241-BX-107	347	0	0
241-BX-108 ■	31	0	0
241-BX-109	193	0	0
241-BX-110 ■	65	37	1
241-BX-111 ■	32	156	0
241-BX-112	163	0	1

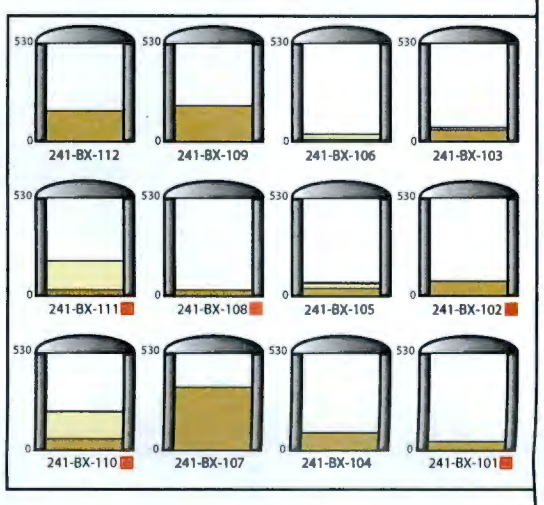

BY-Tank Farm- Constructed 1948-1949
12 @ 758 Kgal Tank Capacity, Single-Shell

Tank	Kgal Sludge	Saltcake	Supernatant
241-BY-101	37	333	0
241-BY-102	0	278	0
241-BY-103 ■	9	405	0
241-BY-104	46	359	0
241-BY-105 ■	48	433	0
241-BY-106 ■	32	398	0
241-BY-107 ■	15	256	0
241-BY-108 ■	40	182	0
241-BY-109	24	263	0
241-BY-110	43	323	0
241-BY-111	0	402	0
241-BY-112	2	284	0

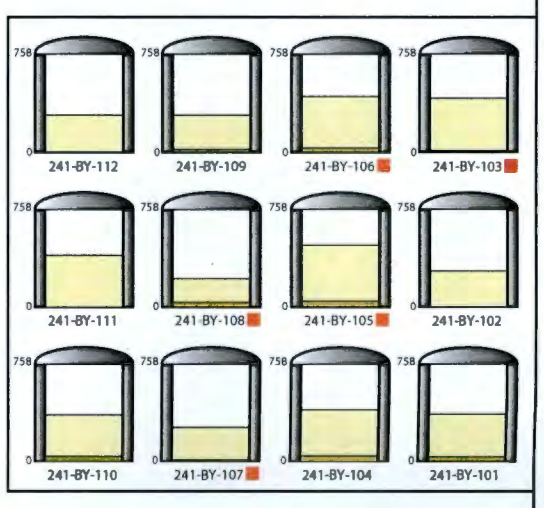

C-Tank Farm- Constructed 1943-1944
12 @ 530 Kgal Tank Capacity, Single-Shell
4 @ 55 Kgal Tank Capacity, Single-Shell

Tank	Kgal Sludge	Saltcake	Supernatant
241-C-101 ■	88	0	0
241-C-102	316	0	0
241-C-103	2	0	0
241-C-104	5	0	0
241-C-105	132	0	0
241-C-106	3	0	0
241-C-107	247	0	6
241-C-108	7	0	0
241-C-109	8	0	1
241-C-110 ■	17	0	0
241-C-111 ■	32	0	0
241-C-112	104	0	1
241-C-201 ■	0	0	0
241-C-202 ■	0	0	0
241-C-203 ■	0	0	0
241-C-204 ■	0	0	0

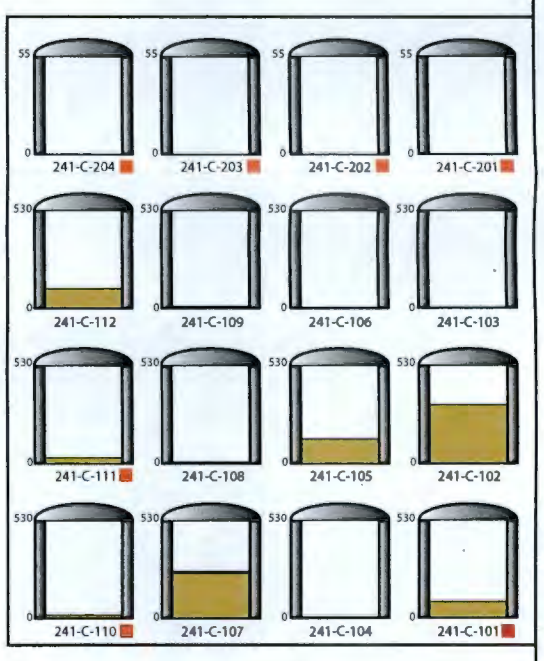

LEGEND: Sludge | Saltcake | Supernatant | Available Space | Assumed/Confirmed Leaker ■

Data Derived From Waste Tank Summary Report Dated 6/30/2011

M. J. Rodgers

washington river protection solutions

\\AP012\CHARDOCS\All By Staff Member\Rodgers\Tank Figures\200 East Tank Profile 063011.pdf

Figure A-4

200 West Tank Waste Contents

S-Tank Farm- Constructed 1950-1951
12 @ 758 Kgal Tank Capacity, Single-Shell

Tank	Sludge (Kgal)	Saltcake (Kgal)	Supernatant (Kgal)
241-S-101	235	117	0
241-S-102	22	69	2
241-S-103	9	227	1
241-S-104 ■	132	156	0
241-S-105	2	404	0
241-S-106	0	455	0
241-S-107	320	38	0
241-S-108	5	545	0
241-S-109	13	520	0
241-S-110	96	293	0
241-S-111	76	325	0
241-S-112	2	0	0

TX-Tank Farm- Constructed 1947-1948
18 @ 758 Kgal Tank Capacity, Single-Shell

Tank	Sludge (Kgal)	Saltcake (Kgal)	Supernatant (Kgal)
241-TX-101	74	17	0
241-TX-102	2	215	0
241-TX-103	0	145	0
241-TX-104	34	33	2
241-TX-105 ■	8	568	0
241-TX-106	5	343	0
241-TX-107 ■	0	30	0
241-TX-108	6	121	0
241-TX-109	363	0	0
241-TX-110 ■	37	430	0
241-TX-111	43	321	0
241-TX-112	0	634	0
241-TX-113 ■	93	545	0
241-TX-114 ■	4	528	0
241-TX-115 ■	8	545	0
241-TX-116 ■	66	533	0
241-TX-117 ■	29	597	0
241-TX-118	0	247	0

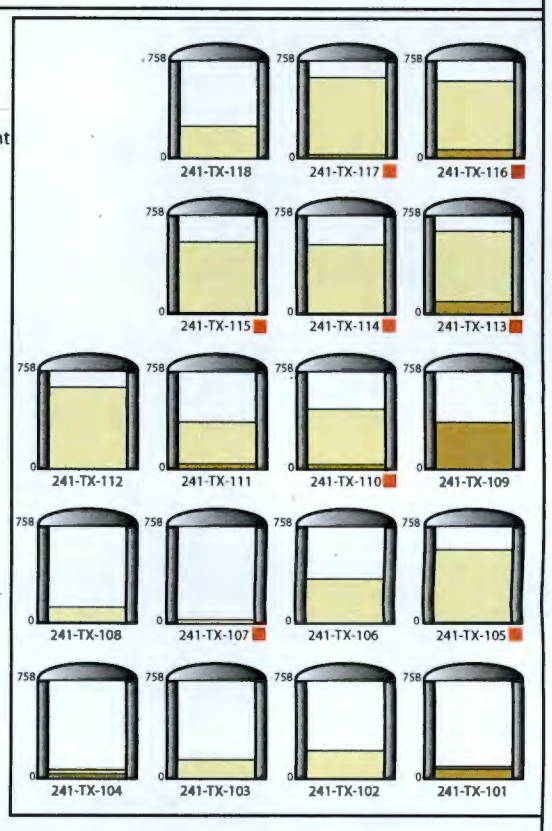

SX-Tank Farm- Constructed 1953-1955
15 @ 1,000 Kgal Tank Capacity, Single-Shell

Tank	Sludge (Kgal)	Saltcake (Kgal)	Supernatant (Kgal)
241-SX-101	144	276	0
241-SX-102	55	287	0
241-SX-103	78	431	0
241-SX-104 ■	136	310	0
241-SX-105	63	312	0
241-SX-106	0	396	0
241-SX-107 ■	94	0	0
241-SX-108 ■	74	0	0
241-SX-109 ■	66	175	0
241-SX-110 ■	49	7	0
241-SX-111 ■	97	18	0
241-SX-112 ■	75	0	0
241-SX-113 ■	19	0	0
241-SX-114 ■	126	29	0
241-SX-115 ■	4	0	0

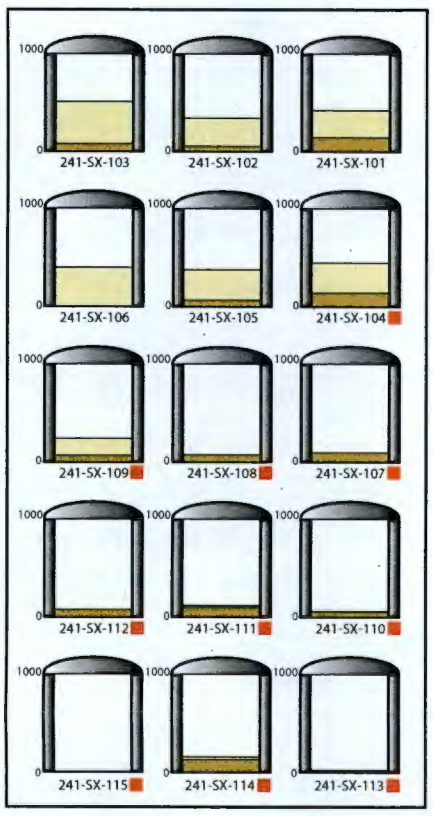

TY-Tank Farm- Constructed 1951-1952
6 @ 758 Kgal Tank Capacity, Single-Shell

Tank	Sludge (Kgal)	Saltcake (Kgal)	Supernatant (Kgal)
241-TY-101 ■	42	76	0
241-TY-102	0	69	0
241-TY-103 ■	103	51	0
241-TY-104 ■	43	0	1
241-TY-105 ■	231	0	0
241-TY-106 ■	16	0	0

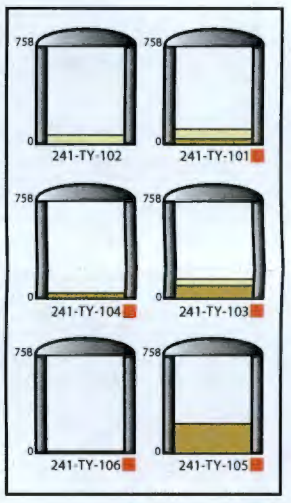

SY-Tank Farm- Constructed 1974-1976
3 @ 1,160 Kgal Tank Capacity, Double-Shell

Tank	Sludge (Kgal)	Saltcake (Kgal)	Supernatant (Kgal)
241-SY-101	0	255	857
241-SY-102	199	11	355
241-SY-103	0	357	385

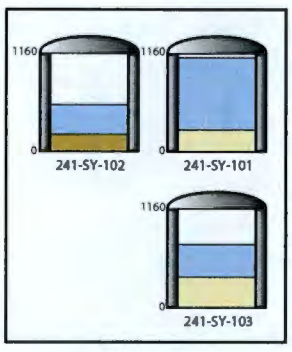

T-Tank Farm- Constructed 1943-1944
12 @ 530 Kgal Tank Capacity, Single-Shell
4 @ 55 Kgal Tank Capacity, Single-Shell

Tank	Sludge (Kgal)	Saltcake (Kgal)	Supernatant (Kgal)
241-T-101 ■	37	62	0
241-T-102	19	0	13
241-T-103 ■	23	0	4
241-T-104	317	0	0
241-T-105	98	0	0
241-T-106 ■	22	0	0
241-T-107 ■	173	0	0
241-T-108 ■	5	11	0
241-T-109 ■	0	62	0
241-T-110	369	0	1
241-T-111 ■	447	0	0
241-T-112	60	0	7
241-T-201	28	0	2
241-T-202	20	0	0
241-T-203	36	0	0
241-T-204	36	0	0

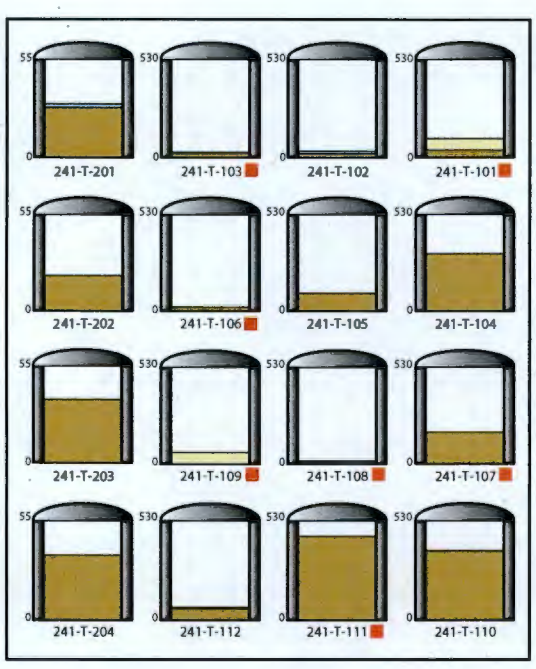

U-Tank Farm- Constructed 1943-1944
12 @ 530 Kgal Tank Capacity, Single-Shell
4 @ 55 Kgal Tank Capacity, Single-Shell

Tank	Sludge (Kgal)	Saltcake (Kgal)	Supernatant (Kgal)
241-U-101 ■	23	0	0
241-U-102	43	283	1
241-U-103	11	405	1
241-U-104 ■	54	0	0
241-U-105	32	321	0
241-U-106	0	168	2
241-U-107	15	279	0
241-U-108	29	405	0
241-U-109	35	366	0
241-U-110 ■	176	0	0
241-U-111	26	196	0
241-U-112 ■	45	0	0
241-U-201	3	0	1
241-U-202	3	0	1
241-U-203	2	0	1
241-U-204	2	0	1

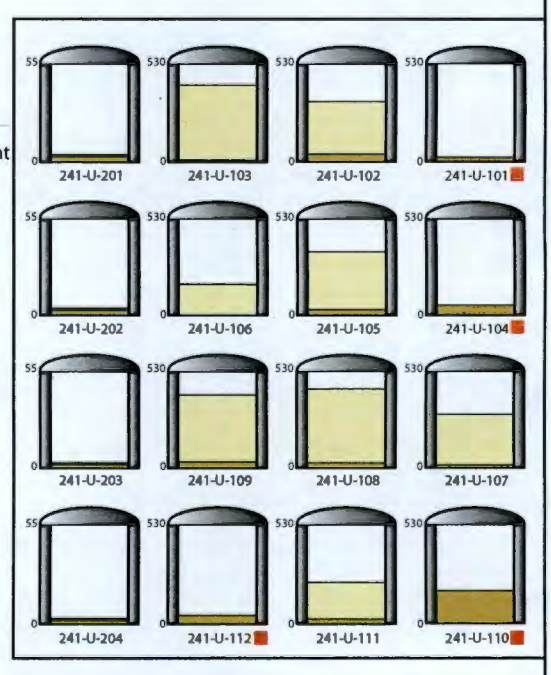

LEGEND: Sludge; Saltcake; Supernatant; Available Space; Assumed/Confirmed Leaker ■

Data Derived From Waste Tank Summary Report Dated 6/30/2011

M. J. Rodgers

washington river protection solutions

\\AP012\CHARDOCS\All By Staff Member\Rodgers\Tank Figures\200 West Tank Profile 063011.pdf

Figure A-5

DISTRIBUTION LIST

Number of copies

OFFSITE - USA

2 **Congress of the United States**
U.S. Senate
717 Hart Senate Building
Washington D.C. 20510

Senator Ron Wyden

U.S. House of Representatives
1323 Longworth House Office Building
Washington D. C. 20515

Congressman Richard "Doc" Hastings, 4th District
Atten: Jeff Markey

1 **U.S. Department of Energy-Headquarters**
20400 Century Blvd.
Germantown, MD 20874

Nicholas P. Machara
EM-21 Cloverleaf Bldg.

1 **Washington State Department of Health**
Office of Radiation Protection
P. O. Box 47827
Olympia, WA 98504-7827

1 **Oregon Department of Energy**
Nuclear Safety Division
625 Marion St. NE
Salem, OR 97301-3737

Dirk Dunning, P.E.

TRI-CITIES:

1 **Tri-City Herald**
Annette Carey
333 West Canal Dr.
Kennewick, WA 99336

1 Richard Welty
409 S. 41st Ave
W. Richland, WA 99353-5005

ONSITE

1	**S. M. Stoller Corporation**	
	P. D. Henwood	B2-62
1	**Government Accountability Office**	
	N. K. Kinter-Meyer	A1-80
5	**Washington State Department of Ecology**	
	M. L. Hendrickson	H0-57
	J. J. Lyon	H0-57
	N. H. Uziemblo	H0-57
	K. J. Wold	H0-57
	Library	H0-57
1	**U.S. Environmental Protection Agency**	
	Tom Post	A3-04
13	**U.S. Department of Energy**	
	M. E. Burandt	H6-60
	J. E. Cheadle	H6-60
	J. A. Dowell	H6-60
	R. L. Frink	H6-60
	B. A. Harkins	H6-60
	D. H. Irby	H6-60
	D. L. Noyes	H6-60
	B. J. Stickney	H6-60
	W. B. Scott	H6-60
	J. Shuen	H6-60
	G. D. Trenchard	H6-60
	Reading Room (P.H. McCormick)	H2-53
1	**U.S. Defense Nuclear Facilities Safety Board**	
	R. G. Quirk	S7-04
1	**Bechtel National, Inc.**	
	P. J. Brackenbury	H4-02/MS6-P1
	Washington River Protection Solutions	
1	M. V. Berriochoa	H6-04
1	J. N. Holloway	H6-04
1	W. A. Kitchen	H6-11
2	R. J. Moore	S3-95
1	J. G. Reynolds	B1-55
1	S. A. Saunders	B1-55
1	J. A. Voogd	R1-51
1	WFO Shift Office	S5-15
1	Environmental Data Mgmt Center	H6-08