U.S. Department of Energy
Office of River Protection
P.O. Box 450, MSIN H6-60
Richland, Washington 99352

0097759

11-ESQ-141

JUL 13 2011

Ms. Jane A. Hedges, Program Manager
Nuclear Waste Program
Washington State
Department of Ecology
3100 Port of Benton Blvd.
Richland, Washington 99354

Dear Ms. Hedges:

SUBMITTAL OF DANGEROUS WASTE PERMIT (DWP) PACKAGES PTF-040, REVISION 1, AND PTF-079B, REVISION 0, FOR THE PRETREATMENT FACILITY (PTF)

Reference: WA7890008967, "Dangerous Waste Portion of the Hanford Facility Resource Conservation and Recovery Act Permit for the Treatment, Storage, and Disposal of Dangerous Waste, Part III, Operating Unit 10, 'Waste Treatment and Immobilization Plant.'"

Attached please find the following permit packages for the PTF UFP-VSL-00062A/B/C vessel alterations and the PTF Pulse Jet Ventilation System (PJV) Demister installations:

- PTF-040, Revision 1, "Supplemental Permit Package for UFP-VSL-00062A, UFP-VSL-00062B, and UFP-VSL-00062C Vessel Alterations;" and

- PTF-079b, Revision 0, "Miscellaneous Treatment Unit for PT PJV Demisters (PJV-DMST-00002A/B/C) at Elevation 56 ft."

Descriptions of the PTF-040, Revision 1 and PTF-079b, Revision 0 permit packages are provided in Attachments 1 and 2, respectively. The PTF-040, Revision 1 and PTF-079b, Revision 0 permit packages provide the information necessary for the Washington State Department of Ecology (Ecology) to confirm that the structures, equipment, and processes described in the permit packages will comply with the Reference. This information will allow Ecology to permit the alterations of the UFP-VSL-00062A/B/C vessels and installation of the PJV Demisters (PJV-DMST-00002A/B/C).

Bechtel National, Inc. and U.S. Department of Energy, Office of River Protection (ORP) certification statements are provided in Attachment 3. DWP package submittals are certified coincident with issuance of the integrity assessment report contained in the package. Permit-affecting design changes not included in, or occurring after issuance of, the final integrity assessment report will be processed in accordance with DWP requirements for permit modifications prior to construction or installation of affected equipment and components. Installation of equipment and components will be done in accordance with permit packages approved and incorporated into the DWP by Ecology.

Ecology comments resulting from the review of this permit modification and associated information have been resolved. Ms. Gae Neath coordinated ORP review of the attached permit packages and the other permit-related documents to be included in this public review.

Due to the potential sensitivity of the attached engineering information, Ecology is requested to place the data for public review in the standard information repositories, but not provide electronic dissemination of the information.

If you have any questions, please contact me, or your staff may contact Gae M. Neath, Office of Environmental Safety and Quality, (509) 376-7828.

Sincerely,

Scott L. Samuelson, Manager
Office of River Protection

ESQ:GMN

Attachments: (3)

cc w/attachs:
J. Brown, BNI
J. M. Colby, BNI
B. L. Curn, BNI
B. G. Erlandson, BNI
P. A. Fisher, BNI
S. K. Murdock, BNI
F. M. Russo, BNI
Administrative Record (WTP H-0-8)
BNI Correspondence
Environmental Portal, LMSI

RECEIVED
JUL 15 2011
EDMC

cc electronic:
R. K. Biyani, Ecology
A. S. Carlson, Ecology
S. L. Dahl, Ecology (1 hard copy)
M. E. Jones, Ecology
D. W. Mears, Ecology
J. J. Wallace, Ecology (2 hard copies)
T. R. Williams, Ecology
J. F. Ollero, MSA
A. C. McKarns, RL
D. J. Sommer, SCS

cc w/o attachs:
D. M. Busche, BNI
J. Cox, CTUIR
S. G. Harris, CTUIR
D. McDonald, Ecology
G. P. Bohnee, NPT
K. Niles, Oregon Energy
S. R. Weil, RL
R. Jim, YN

Attachment 1
11-ESQ-141
(115 Pages Double-Sided)

Permit Package PTF-040, Revision 1
Supplemental Permit Package for UFP-VSL-00062A,
UFP-VSL-00062B, and UFP-VSL-00062C Vessel Alterations

Supplemental Permit Package PTF-040, Rev. 1 Description

This supplemental permit package addresses vessel alterations of the support system due to revised loading conditions in the following vessels.

Vessel Number	Vessel Title
UFP-VSL-00062A	Ultrafilter Permeate Vessel
UFP-VSL-00062B	Ultrafilter Permeate Vessel
UFP-VSL-00062C	Ultrafilter Permeate Vessel

The vessels are found in the central portion of the facility located at the zero foot level in process cells P-0104 and P-0106. The vessels are regulated since the material that will be managed within the vessels is designated as dangerous and/or mixed waste.

The re-analysis of the vessels resulted from:

- Application of revised Pulse Jet Mixer multiple over-blow loads.
- Seismic application of WTP Site Specific Ground Motion (WSGM).
- Process changes from external flow-sheet review team (EFRT) recommendations.

Vessel alterations will include one or more of the following additions and/or modifications:

- PJM air line modifications
- Internal pipe support ring
- PJM support modifications
- Process pipe supports
- Charge vessel supports.

The supplemental permit package, PTF-040, Rev. 1 contains two limited assessment reports signed by an independent qualified registered professional engineer (IQRPE) certifying the integrity of the stamped and installed vessels inclusive of the planning stage to the start of cutting an entry opening in each vessel's wall, during the alterations, and after completing the alterations, closing the vessels. One report addresses the integrity of UFP-VSL-00062A and UFP-VSL-00062B. The other report addresses UFP-VSL-00062C. The limited IQRPE reports may be made integral to the final IQRPE report(s) that will be prepared and submitted to Ecology prior to receipt of waste.

The supplemental permit package contains revised mechanical data sheets to update the versions in the dangerous waste permit. Other documents are proposed to be included in the permit that describe the alterations being performed to the vessels, as listed on the Table of Contents.

DWP Supplemental Information Table of Contents
PTF-040, Rev. 1
Supplement to Permit Package No. PTF-040 Tank System for Pretreatment Facility
Vessel UFP-VSL-00062A, UFP-VSL-00062B, and UFP-VSL-00062C

Table of Contents
For Incorporation into the Permit

Engineering Document Title	Document Number	Revision	Permit Condition	Included	Remarks
IQRPE Structural Integrity Assessment Report for Alteration/Rework of PTF UFP Ultra Permeate Collection Vessel (UFP-VSL-00062C)	CCN 208819	00A	III.10.E.9.c.i	Y	
IQRPE Structural Integrity Assessment Report for Alteration/Rework of PTF UFP Ultra Permeate Collection Vessels (UFP-VSL-00062A/B)	CCN 208818	00A	III.10.E.9.c.i	Y	
Mechanical Systems Data Sheet for UFP-VSL-0062A	24590-PTF-MVD-UFP-00005	11	III.10.E.9.c.ii	Y	Replace 24590-PTF-MVD-UFP-P0005, Rev. 1 in Appendix 8.6 with 24590-PTF-MVD-UFP-00005, Rev. 11
Mechanical Systems Data Sheet for UFP-VSL-00062B	24590-PTF-MVD-UFP-00006	11	III.10.E.9.c.ii	Y	Replace 24590-PTF-MVD-UFP-P0006, Rev. 1 in Appendix 8.6 with 24590-PTF-MVD-UFP-00006, Rev. 11
Mechanical Systems Data Sheet for UFP-VSL-00062C	24590-PTF-MVD-UFP-00007	11	III.10.E.9.c.ii	Y	Replace 24590-PTF-MVD-UFP-P0007, Rev. 1 in Appendix 8.6 with 24590-PTF-MVD-UFP-00007, Rev. 11
Vendor Drawing Change Notice for UFP-VSL-00062A	24590-PTF-VDCN-MS-10-00007	NA	III.10.E.9.c.ii III.10.E.9.c.vi	Y	
Vendor Drawing Change Notice for UFP-VSL-00062B	24590-PTF-VDCN-MS-10-00008	NA	III.10.E.9.c.ii III.10.E.9.c.vi	Y	
Vendor Drawing Change Notice for UFP-VSL-00062C	24590-PTF-VDCN-MS-10-00009	NA	III.10.E.9.c.ii III.10.E.9.c.vi	Y	
Engineering Specification for Alteration and Repair of On-Site Stamped ASME Code Vessels and Boilers for Subcontract	24590-WTP-3PS-MVB2-T0002	0	III.10.E.9.c.ii	Y	
Specification Change Notice - Stiffening and Stabilizing the Openings of Access Opening Repair Vessels	24590-WTP-3PN-MVB2-00010	NA	III.10.E.9.c.ii	Y	
Specification Change Notice - Cutting Method for Access opening	24590-WTP-3PN-MVB2-00011	NA	III.10.E.9.c.ii	Y	

DWP Supplemental Information Table of Contents
PTF-040, Rev. 1
Supplement to Permit Package No. PTF-040 Tank System for Pretreatment Facility
Vessel UFP-VSL-00062A, UFP-VSL-00062B, and UFP-VSL-00062C

Table of Contents
For Incorporation into the Administrative Record

Engineering Document Title	Document Number	Revision	Permit Condition	Included	Remarks
EFRT Issue M3 PJM Vessel Mixing Assessment, Volume 2- CNP-VSL-0003/4, CXP-VSL-00004, UFP-VSL-00062A/B/C, RDP-VSL-00002A/B/C	24590-WTP-RPT-ENG-08-021-02	0	III.10.E.9.c.ii	N	Document will be made available upon request
Pretreatment Vessel Heel Dilution/Cleanout Feasibility Study	24590-WTP-RPT-PET-10-013	0	III.10.E.9.c.ii	N	Document will be made available upon request

ISSUED BY
RPP-WTP PDC

CCN 208819

R11362493

AREVA

AFS-11-0228

April 26, 2011

Ms. Trina Howard
Subcontract Administrator
Bechtel National, Inc.
2435 Stevens Center Place
Richland, Washington 99354

Dear Ms. Howard:

BECHTEL NATIONAL, INC. CONTRACT NO. 24590-CM-HC4-HXYG-00211 IQRPE STRUCTURAL INTEGRITY ASSESSMENT REPORT FOR ALTERATION/REWORK OF PTF UFP ULTRA PERMEATE COLLECTION VESSEL (UFP-VSL-00062C) (IA-3005072-000)

The integrity assessment of the subject vessel has been completed per the contract requirements and is enclosed for your use. The assessment found that the design is sufficient to ensure that the vessel is adequately designed and has sufficient structural strength, compatibility with the waste(s) to be processed/stored/treated, and corrosion protection to ensure that it will not collapse, rupture, or fail.

If you have any questions, please contact Tarlok Hundal at (509) 371-1975, or via email at tarlok.hundal@areva.com.

Sincerely,

Fred R. Renz
Contracts Administration
AREVA Federal Services LLC
Richland Office

Enclosure (1)

llm

cc: D. C. Pfluger, MS 5-L w/enclosure (2)

AREVA Federal Services LLC

2101 Horn Rapids Road, RC-19, Richland, WA 99354, P.O. Box 840, Richland, WA 99352
Tel.: 509-375-8096 - Fax: 509-375-8495 - www.areva.com

IA-3005072-000

IQRPE STRUCTURAL INTEGRITY ASSESSMENT REPORT FOR ALTERATION/REWORK OF PTF UFP ULTRA PERMEATE COLLECTION VESSEL (UFP-VSL-00062C)

Please note that source, special nuclear and byproduct materials, as defined in the Atomic Energy Act of 1954 (AEA), are regulated at the U.S. Department of Energy (DOE) facilities exclusively by DOE acting pursuant to its AEA authority. DOE asserts, that pursuant to the AEA, it has sole and exclusive responsibility and authority to regulate source, special nuclear, and byproduct materials at DOE-owned nuclear facilities. Information contained herein on radionuclides is provided for process description purposes only.

IQRPE STRUCTURAL INTEGRITY ASSESSMENT REPORT FOR ALTERATION/REWORK OF PTF UFP ULTRA PERMEATE COLLECTION VESSEL (UFP-VSL-00062C)

"I, Tarlok Singh Hundal have reviewed and certified a portion of the design of a new tank system or component located at the Hanford Waste Treatment Plant, owned/operated by Department of Energy, Office of River Protection, Richland, Washington. My duties were independent review of the current design for the Alteration/Rework of PTF UFP Ultra Permeate Collection Vessel (UFP-VSL-00062C), as required by the Washington Administrative Code, *Dangerous Waste Regulations*, Section WAC-173-303-640(3) (a) through (g) applicable components."

"I certify under penalty of law that I have personally examined and am familiar with the information submitted in this document and all attachments and that, based on my inquiry of those individuals immediately responsible for obtaining the information, I believe that the information is true, accurate, and complete. I am aware that there are significant penalties for submitting false information, including the possibility of fine and imprisonment."

The documentation reviewed indicates that the design fully satisfies the requirements of the WAC.

The attached review is seven (7) pages numbered one (1) through seven (7).

Signature

4/26/11
Date

Scope	Scope of this Integrity Assessment	This Integrity Assessment report is limited to address only the integrity of the stamped and installed vessel (UFP-VSL-000062C). The assessment will be inclusive of the planning stage-to-the-start of cutting an entry opening in the vessel wall, during, and after finish closing it. The entry opening is required to perform the repair/rework and/or modifications of the support systems for the main vessel's internal vessels and piping due to revised loading conditions. The re-assessment of the vessel is mandated to ensure its re-compliance with the requirements of the applicable codes and standards. This vessel is located in Room P-0104 at Elevation 0'-0" of the Pretreatment Facility Building as shown on the General Arrangement Plan drawing 24590-PTF-P1-P01T-00001. Note: This limited Integrity Assessment report may be made integral part of the separately prepared final Integrity Assessment report of the vessel (UFP-VSL-00062C).
Summary of Assessment		For each item of "Information Assessed" (i.e., Criteria) on the following pages, the items listed under "Source of Information" were reviewed and found to furnish adequate design requirements and controls to ensure that the internal vessels and piping supports and associated alteration and/or repair work intended to be performed at the parent stamped vessel (UFP-VSL-00062C), i.e., it will satisfy the applicable re-stamping requirements of the Washington Administrative Code (WAC) 296-104-502 (1), which has adopted the National Board of Inspectors Code (NBIC) 2007 Part 3, as a standard guideline for the repairs and alteration of non-nuclear vessels.

References	Drawings, Specifications, and Mechanical Data Sheet	Plant Drawing: 24590-PTF-P1-P01T-00001, Rev. 7, Pretreatment Facility General Arrangement Plan at Elev. 0'-0"; Vendor Fabrication Drawings (Bechtel Code 1 Drawings*): * Drawings reviewed and approved for fabrication by Bechtel. Including Drawing Change Notice # 24590-PTF-VDCN-MS-10-00009. 24590-QL-POD-MVA0-00001-03-07, Rev. 00F, 180" ID Ultrafilter Permeate Collection Vessel; 24590-QL-POD-MVA0-00001-03-08, Rev. 00F, 180" ID Ultrafilter Permeate Collection Vessel Elevation; 24590-QL-POD-MVA0-00001-03-09, Rev. 00F, 180" ID Ultrafilter Permeate Collection Vessel Plan; 24590-QL-POD-MVA0-00001-03-10, Rev. 00G, 180" ID Ultrafilter Permeate Collection Vessel Details; 24590-QL-POD-MVA0-00001-03-12, Rev. 00E, 180" ID Ultrafilter Permeate Collection Vessel Nozzle Details (1 of 3); 24590-QL-POD-MVA0-00001-03-13, Rev. 00E, 180" ID Ultrafilter Permeate Collection Vessel Nozzle Details (2 of 3); 24590-QL-POD-MVA0-00001-03-14, Rev. 00E, 180" ID Ultrafilter Permeate Collection Vessel Nozzle Details (3 of 3); 24590-QL-POD-MVA0-00001-03-44, Rev. 00B, 180" ID Ultrafilter Permeate Collection Vessel Internal Support; 24590-QL-POD-MVA0-00001-03-45, Rev. 00B, 180" ID Ultrafilter Permeate Collection Vessel Internal Support. Specifications: 24590-WTP-3PS-MVB2-T0002, Rev. 0, Engineering Specification for Alteration and Repair of on Site Stamped ASME Code Vessels and Boilers for Subcontract (including SCN # 00010); 24590-WTP-3PS-MV00-T0001, Rev. 4, Engineering Specification for Pressure Vessel Design and Fabrication; 24590-WTP-3PS-MV00-T0002, Rev. 3, Engineering Specification for Seismic Qualification of Criteria of Pressure Vessels; 24590-WTP-3PS-MV00-T0003, Rev. 3, Engineering Specification for Pressure Vessel Fatigue Analysis; 24590-WTP-3PS-MVB2-T0001, Rev. 2, Engineering Specification for Welding of Pressure Vessels, Heat Exchangers, Heat Exchangers, and Boilers; 24590-WTP-3PS-G000-T0001, Rev. 1, General Specification for Supplier Quality Assurance Program Requirements; 24590-WTP-3PS-G000-T0010, Rev. 2, Engineering Specification for Positive Material Identification (PMI) for Construction; 24590-WTP-3PS-SS90-T0001, Rev. 2, Engineering Specification for Seismic Qualification of Seismic Category I/II Equipment and Tanks. Mechanical Data Sheet: 24590-PTF-MVD-UFP-00007, Rev. 11, Mechanical Data Sheet for Ultrafilter Permeate Collection Vessel (UFP-VSL-00062C).

	Information Assessed	Source of Information	Assessment
Design	The design standards are appropriate and adequate for the alteration and repair work of the existing stamped vessel.	Drawings, Mechanical Data Sheet, and Specifications listed above under References; ASME Boiler & Pressure Vessel Code, Section VIII, Div. 1, Rules for Construction of Pressure Vessels; NBIC 2007, Part 3 with addenda, National Board Inspection Code, National Board of Boiler and Pressure Vessel Inspectors; WAC 296-104-502(1), Washington Administrative Code.	The original Mechanical Data Sheet (MDS) required that the PTF vessel (UFP-VSL-00062C) be designed and fabricated per ASME Code, Section VIII, Div. 1 and be stamped and registered per National Boards of Registration requirements. The stamped vessel is installed in Room P-0104 at Elevation 0'-0" as shown on the PTF General Arrangement Plan drawing. However, subsequent to the installation of the vessel, MDS was revised with new loading conditions such as seismic and thermal. The Specification for Alteration and Repair of Stamped Vessels requires that the alterations and repairs shall be done in accordance with the requirements of ASME Section VIII, Div. 1 Code, NBIC 2007 Part 3 Code, and WAC 296-104-502(1). It further states that the altered/repaired vessel shall be re-stamped (R-stamped) and re-registered with the National Board of Registration. The requirements of the referenced engineering specifications are inclusive of the design of altered vessel. The requirements include structural design, positive material identification, fabrication tolerances, acceptable welding procedures, welder qualifications and testing records, and NDE inspections. The vessel is identified as Quality Level (Q) and Seismic Category (SC-I) in the MDS and drawings. The requirements listed in the aforementioned codes, documents, and standards identified in Specification for Alteration and Repair, are adequate and acceptable for the repair work of the vessel's internal vessels supports and piping supports and associated components.

	Information Assessed	Source of Information	Assessment
Design (cont'd)	Vessel repair work of modifying the internals will not compromise vessel's integrity and the design calculations for the altered vessel demonstrate that sound engineering principles of construction are used	Drawings, Mechanical Data Sheet, and Specifications listed above under References; ASME Boiler & Pressure Vessel Code, Section VIII, Div. 1, Rules for Construction of Pressure Vessels; 24590-PTF-MVC-UFP-00023, Rev. B, UFP-VSL-00062A/B/C, Ultra Permeate Collection Vessel Stress Analysis with ANSYS (BNI Design Calculation); 24590-PTF-RPT-MS-10-002, Rev. 0, Buckling Evaluation for Vessels Onsite that Need a Construction Access Through the Vessel Shell; 24590-QL-POD-MVA0-00001-09-07, Rev. 00B, Vessel Code Calculations (Vendor Code Calculations); NBIC 2007, Part 3 with addenda, National Board Inspection Code, National Board of Boiler and Pressure Vessel Inspectors; WAC 296-104-502(1), Washington Administrative Code.	The PTF Vessel (UFP-VSL-00062C) is a standard stamped and registered ASME Code Section VIII, Div. 1 vessel. This stamped, registered, and installed vessel complies with the requirements stated in the original MDS. However, the MDS has been revised after the installation of the vessel. The revised current MDS shows new design loading conditions such as seismic and thermal. Subsequent to the issuance of revised loading conditions, BNI performed Design Calculation of the vessel as a supplement to the Vendor Code Calculations. The BNI Design Calculation determined initially that the original vessel configuration does not sustain the new loading conditions of the revised MDS. Series of design modifications were performed on the original design which required the redesign of internal components supports system namely the Pulse Jet Mixers (PJM) and Charge Vessel supports and piping and pipe supports as detailed and shown in Attachment G of the BNI Design Calculation document. The vessel shell wall entry opening of 8 ft x 8 ft size required to perform modifications of support system of the internals was evaluated. The Buckling Evaluation document determined that the structural stresses of the parent vessel with the above mentioned opening for repair work will be well within the allowable limits, therefore, its structural integrity will not be compromised. The Specification for Alteration and Repair of the vessel identify that all repair work on the stamped vessel will be done in accordance with the requirements of ASME Section VIII, Div. 1, NBIC 2007 Code Part 3, and WAC 296-104-502(1). Review of the drawings and the BNI Design Calculation demonstrates that sound engineering principles of design/construction have been used in the design media. It should be noted that the final evaluation of the parent vessel and its components is not in the scope of this report; however, it will be addressed in its final Integrity Assessment report.

	Information Assessed	Source of Information	Assessment
Design (cont'd)	Modified internal supports (material, welding details, design configuration) will not compromise vessel's integrity, i.e., the altered vessel has adequate strength, after consideration of the corrosion allowance, to withstand the operating pressure and temperature, and seismic loads	Drawings, Mechanical Data Sheet, and Specifications listed above under References; ASME Boiler & Pressure Vessel Code, Section VIII, Div. 1, Rules for Construction of Pressure Vessels; 24590-PTF-S0C-S15T-00057, Rev. A, Seismic Analysis of Pretreatment Building-WSGM In-Structure Response Spectra; 24590-WTP-MVC-50-00001, Rev. A, Pulse Jet Mixer Overblow Vessel Loads, including ECCN 24590-WTP-MVE-50-00009); 24590-PTF-MVC-UFP-00023, Rev. B, UFP-VSL-00062A/B/C, Ultra Permeate Collection Vessel Stress Analysis with ANSYS (BNI Design Calculation); 24590-QL-POD-MVA0-00001-09-07, Rev. 00B, Vessel Code Calculations (Vendor Code Calculations); NBIC 2007, Part 3 with addenda, National Board Inspection Code, National Board of Boiler and Pressure Vessel Inspectors ; WAC 296-104-502(1), Washington Administrative Code.	The MDS and the Specification for Alteration and Repair of Stamped ASME Vessels identify vessel's new loading conditions and applicable codes for its re-qualification. Detailed requirements for seismic design of the vessel are furnished in the Engineering Specification for Seismic Qualification of Seismic Category I/II Equipment and Tanks. After the installation of the vessel the design loading such as seismic and temperature conditions have been revised per MDS which necessitated the review of the Vendor Code Calculations for design verification purposes. The BNI Design Calculation was performed using revised seismic forces per Seismic Analysis of PTF document, new thermal conditions, and PJM load per Pulse Jet Mixer Overblow Vessels Loads document, as a supplement to the Vendor Code Calculations. The BNI Design Calculation initially showed that the stamped vessel (UFP-VSL-00062C) could not sustain the revised loading conditions stated above. Therefore, in order to qualify the vessel for revised loading conditions including the specified corrosion allowance in the MDS document, the BNI Design Calculation recommended modification of the internals including internal vessels' supports and piping supports and piping system to have adequate strength for the specified design life of 40 years. The Engineering Specification for Alteration and Repair of Stamped ASME Vessel requires that any alterations made to the vessel and its internals shall comply with the requirements of ASME Section VIII, Div.1, NBIC 2007 Code Part 3, and WAC 296-104-502(1). Therefore, the rework/repair modifications performed in compliance to the above listed codes and standards will ensure structural integrity of the parent vessel and its components.

Information Assessed		Source of Information	Assessment
Design (cont'd)	Modified internal supports (material, welding details, and design configuration) will not compromise integrity of pulse jet mixers and charge vessels.	Drawings, Mechanical Data Sheet, and Specifications listed above under References; 24590-WTP-DC-ST-04-001, Rev. 3A, Seismic Analysis and Design Criteria; ASME Boiler & Pressure Vessel Code, Section VIII, Div. 1, Rules for Construction of Pressure Vessels; 24590-PTF-S0C-S15T-00057, Rev. A, Seismic Analysis of Pretreatment Building-WSGM In-Structure Response Spectra; 24590-WTP-MVC-50-00001, Rev. A, Pulse Jet Mixer Overblow Vessel Loads, including ECCN 24590-WTP-MVE-50-00009); 24590-PTF-MVC-UFP-00023, Rev. B, UFP-VSL-00062A/B/C, Ultra Permeate Collection Vessel Stress Analysis with ANSYS (BNI Design Calculation); NBIC 2007 Code, Part 3 with addenda, National Board Inspection Code, National Board of Boiler and Pressure Vessel Inspectors: WAC 296-104-502(1), Washington Administrative Code.	The MDS identifies the vessel's operating pressure and temperature ranges, the materials selected for the vessel and its internals, the corrosion allowance, the quality level, and the seismic design requirements. The ASME Code, Section VIII, Div. 1 Code, requires that corrosion allowance material be considered when evaluating the adequacy of vessel components for these loads at end of its life. Detailed requirements for seismic design of the vessel are furnished in the Engineering Specification for Seismic Qualification of Seismic Category I/II Equipment and Tanks. The vendor drawings show that the vertical parent vessel houses 12 internal vessels; six pulse jet mixers and six charge vessels, all built with using 316 stainless steel plates (max. 0.03% C dual certified). These internal vessels are supported off from the parent vessel and some of them from an adjoining internal vessel. The Engineering Specification for Alteration and Repair of Stamped ASME vessel requires that any alterations made to the vessel and its internals shall comply with the requirements of ASME Section VIII, Div. 1, NBIC 2007 Code Part 3, and WAC 296-104-502(1). The BNI Design Calculation reviewed shows that the modified vessel will withstand the loading conditions identified in MDS, Seismic Analysis of PTF, and Pulse Jet Mixer Overblow Vessel Loads documents. Therefore, the structural integrity of the vessel and its internals will not be compromised.

Information Assessed		Source of Information	Assessment
Foundation	The vessel support and foundation of the altered/modified vessel will sustain modified full vessel load.	Mechanical Data Sheet and Specifications listed above under References; 24590-WTP-DC-ST-04-001, Rev. 3A, Seismic Analysis and Design Criteria; 24590-WTP-DC-ST-01-001, Rev. 12D, Structural Design Criteria; 24590-PTF-MVC-UFP-00023, Rev. B, UFP-VSL-00062A/B/C, Ultra Permeate Collection Vessel Stress Analysis with ANSYS (BNI Design Calculation).	The MDS for vessel (UFP-VSL-00062C) requires that vessel's support system is to be designed in accordance with the applicable provisions specified in Seismic Analysis and Design Criteria and Engineering Specification for Seismic Qualification of Seismic Category I/II Equipment and Tanks. The requirements of the above listed two documents require the use of Structural Design Criteria. The BNI Design Calculation reviewed show that vessel support skirt resting on a base plate is adequately designed to sustain the applicable loads of the modified vessel. The support skirt base plate in turn is anchored to floor with welds to the plates embedded in the concrete slab. The slab is supposed to sustain full load of the vessel, however, its assessment is not in the scope of this integrity assessment. It will be covered under a separate report.

ISSUED BY
RPP-WTP PDC

R11362492

CCN 208818

AREVA

AFS-11-0229

April 26, 2011

Ms. Trina Howard
Subcontract Administrator
Bechtel National, Inc.
2435 Stevens Center Place
Richland, Washington 99354

Dear Ms. Howard:

BECHTEL NATIONAL, INC. CONTRACT NO. 24590-CM-HC4-HXYG-00211 IQRPE STRUCTURAL INTEGRITY ASSESSMENT REPORT FOR ALTERATION/REWORK OF PTF UFP ULTRA PERMEATE COLLECTION VESSELS (UFP-VSL-00062A/B) (IA-3005073-000)

The integrity assessment of the subject vessels has been completed per the contract requirements and is enclosed for your use. The assessment found that the design is sufficient to ensure that the vessels are adequately designed and have sufficient structural strength, compatibility with the waste(s) to be processed/stored/treated, and corrosion protection to ensure that they will not collapse, rupture, or fail.

If you have any questions, please contact Tarlok Hundal at (509) 371-1975, or via email at tarlok.hundal@areva.com.

Sincerely,

Fred R. Renz
Contracts Administration
AREVA Federal Services LLC
Richland Office

Enclosure (1)

lim

cc: D. C. Pfluger, MS 5-L w/enclosure (2)

AREVA Federal Services LLC

2101 Horn Rapids Road, RC-19, Richland, WA 99354, P.O. Box 840, Richland, WA 99352
Tel.: 509-375-8096 - Fax: 509-375-8495 - www.areva.com

IA-3005073-000

IQRPE STRUCTURAL INTEGRITY ASSESSMENT REPORT FOR ALTERATION/REWORK OF PTF UFP ULTRA PERMEATE COLLECTION VESSELS (UFP-VSL-00062A/B)

Please note that source, special nuclear and byproduct materials, as defined in the Atomic Energy Act of 1954 (AEA), are regulated at the U.S. Department of Energy (DOE) facilities exclusively by DOE acting pursuant to its AEA authority. DOE asserts, that pursuant to the AEA, It has sole and exclusive responsibility and authority to regulate source, special nuclear, and byproduct materials at DOE-owned nuclear facilities. Information contained herein on radionuclides is provided for process description purposes only.

IQRPE STRUCTURAL INTEGRITY ASSESSMENT REPORT FOR ALTERATION/REWORK OF PTF UFP ULTRA PERMEATE COLLECTION VESSELS (UFP-VSL-00062A/B)

"I, Tarlok Singh Hundal have reviewed and certified a portion of the design of a new tank system or component located at the Hanford Waste Treatment Plant, owned/operated by Department of Energy, Office of River Protection, Richland, Washington. My duties were independent review of the current design for the Alteration/Rework of PTF UFP Ultra Permeate Collection Vessels (UFP-VSL-00062A/B), as required by the Washington Administrative Code, *Dangerous Waste Regulations*, Section WAC-173-303-640(3) (a) through (g) applicable components."

"I certify under penalty of law that I have personally examined and am familiar with the information submitted in this document and all attachments and that, based on my inquiry of those individuals immediately responsible for obtaining the information, I believe that the information is true, accurate, and complete. I am aware that there are significant penalties for submitting false information, including the possibility of fine and imprisonment."

The documentation reviewed indicates that the design fully satisfies the requirements of the WAC.

The attached review is eight (8) pages numbered one (1) through eight (8).

TARLOK SINGH HUNDAL
STATE OF WASHINGTON
20212
REGISTERED
PROFESSIONAL ENGINEER

T S Hundal
Signature

4/26/11
Date

Scope	Scope of this Integrity Assessment	This Integrity Assessment report is limited to address only the integrity of the stamped and installed vessels (UFP-VSL-00062A/B). The assessment will be inclusive of the planning stage-to-the-start of cutting an entry opening in each vessel's wall, during, and after finish closing it. The entry opening is required to perform the repair/rework and/or modifications of the support systems for each main vessel's internal vessels and piping due to revised loading conditions. The re-assessment of the vessels is mandated to ensure their re-compliance with the requirements of the applicable codes and standards. These vessels are located in Room P-0106 at Elevation 0'-0" of the Pretreatment Facility Building as shown on the General Arrangement Plan drawing 24590-PTF-P1-P01T-00001. Note: This limited Integrity Assessment report may be made integral part of the separately prepared final Integrity Assessment report of the vessels (UFP-VSL-00062A/B).
Summary of Assessment		For each item of "Information Assessed" (i.e., Criteria) on the following pages, the items listed under "Source of Information" were reviewed and found to furnish adequate design requirements and controls to ensure that the internal vessels and piping supports and associated alteration and/or repair work intended to be performed at the parent stamped vessels (UFP-VSL-00062A/B), i.e., it will satisfy the applicable re-stamping requirements of the Washington Administrative Code (WAC) 296-104-502 (1), which has adopted the National Board of Inspectors Code (NBIC) 2007 Part 3, as a standard guideline for the repairs and alteration of non-nuclear vessels.

References	Specifications and Mechanical Data Sheets	<u>Specifications:</u> 24590-WTP-3PS-MVB2-T0002, Rev. 0, Engineering Specification for Alteration and Repair of on Site Stamped ASME Code Vessels and Boilers for Subcontract (including SCN # 00010); 24590-WTP-3PS-MV00-T0001, Rev. 4, Engineering Specification for Pressure Vessel Design and Fabrication; 24590-WTP-3PS-MV00-T0002, Rev. 3, Engineering Specification for Seismic Qualification of Criteria of Pressure Vessels; 24590-WTP-3PS-MV00-T0003, Rev. 3, Engineering Specification for Pressure Vessel Fatigue Analysis; 24590-WTP-3PS-MVB2-T0001, Rev. 2, Engineering Specification for Welding of Pressure Vessels, Heat Exchangers, Heat Exchangers, and Boilers; 24590-WTP-3PS-G000-T0001, Rev. 1, General Specification for Supplier Quality Assurance Program Requirements; 24590-WTP-3PS-G000-T0010, Rev. 1, Engineering Specification for Positive Material Identification (PMI) for Construction; 24590-WTP-3PS-SS90-T0001, Rev. 2, Engineering Specification for Seismic Qualification of Seismic Category I/II Equipment and Tanks. <u>Mechanical Data Sheets:</u> 24590-PTF-MVD-UFP-00005, Rev. 11, Mechanical Data Sheet for Ultrafilter Permeate Collection Vessel (UFP-VSL-00062A); 24590-PTF-MVD-UFP-00006, Rev. 11, Mechanical Data Sheet for Ultrafilter Permeate Collection Vessel (UFP-VSL-00062B).

References (cont'd)	Drawings	Plant Drawing: 24590-PTF-P1-P01T-00001, Rev. 7, Pretreatment Facility General Arrangement Plan at Elev. 0'-0". Vendor Fabrication Drawings (Bechtel Code 1 Drawings*): * Drawings reviewed and approved for fabrication by Bechtel. Also see DCN # 24590-PTF-VDCN-MS-10-00007 applicable to the following drawings for (UFP-VSL-00062A): 24590-QL-POD-MVA0-00001-03-01, Rev. 00F, 180" ID Ultrafilter Permeate Collection Vessel; 24590-QL-POD-MVA0-00001-03-02, Rev. 00F, 180" ID Ultrafilter Permeate Collection Vessel Elevation; 24590-QL-POD-MVA0-00001-03-03, Rev. 00F, 180" ID Ultrafilter Permeate Collection Vessel Plan; 24590-QL-POD-MVA0-00001-03-20, Rev. 00G, 180" ID Ultrafilter Permeate Collection Vessel Details; 24590-QL-POD-MVA0-00001-03-21, Rev. 00E, 180" ID Ultrafilter Permeate Collection Vessel Details; 24590-QL-POD-MVA0-00001-03-22, Rev. 00E, 180" ID Ultrafilter Permeate Collection Vessel Nozzle Details (1 of 3); 24590-QL-POD-MVA0-00001-03-23, Rev. 00E, 180" ID Ultrafilter Permeate Collection Vessel Nozzle Details (2 of 3); 24590-QL-POD-MVA0-00001-03-24, Rev. 00E, 180" ID Ultrafilter Permeate Collection Vessel Nozzle Details (3 of 3); 24590-QL-POD-MVA0-00001-03-40, Rev. 00B, 180" ID Ultrafilter Permeate Collection Vessel Internal Support; 24590-QL-POD-MVA0-00001-03-41, Rev. 00B, 180" ID Ultrafilter Permeate Collection Vessel Internal Support. Also see DCN # 24590-PTF-VDCN-MS-10-00008 applicable to the following drawings for (UFP-VSL-00062B): 24590-QL-POD-MVA0-00001-03-04, Rev. 00F, 180" ID Ultrafilter Permeate Collection Vessel; 24590-QL-POD-MVA0-00001-03-05, Rev. 00F, 180" ID Ultrafilter Permeate Collection Vessel Elevation; 24590-QL-POD-MVA0-00001-03-06, Rev. 00F, 180" ID Ultrafilter Permeate Collection Vessel Plan; 24590-QL-POD-MVA0-00001-03-30, Rev. 00G, 180" ID Ultrafilter Permeate Collection Vessel Details; 24590-QL-POD-MVA0-00001-03-31, Rev. 00E, 180" ID Ultrafilter Permeate Collection Vessel Details; 24590-QL-POD-MVA0-00001-03-32, Rev. 00E, 180" ID Ultrafilter Permeate Collection Vessel Nozzle Details (1 of 3); 24590-QL-POD-MVA0-00001-03-33, Rev. 00E, 180" ID Ultrafilter Permeate Collection Vessel Nozzle Details (2 of 3); 24590-QL-POD-MVA0-00001-03-34, Rev. 00E, 180" ID Ultrafilter Permeate Collection Vessel Nozzle Details (3 of 3); 24590-QL-POD-MVA0-00001-03-42, Rev. 00B, 180" ID Ultrafilter Permeate Collection Vessel Internal Support; 24590-QL-POD-MVA0-00001-03-43, Rev. 00B, 180" ID Ultrafilter Permeate Collection Vessel Internal Support.

Information Assessed		Source of Information	Assessment
Design	The design standards are appropriate and adequate for the alteration and repair work of the existing stamped vessel.	Drawings, Mechanical Data Sheets, and Specifications listed above under References; ASME Boiler & Pressure Vessel Code, Section VIII, Div. 1, Rules for Construction of Pressure Vessels; NBIC 2007, Part 3 with addenda, National Board Inspection Code, National Board of Boiler and Pressure Vessel Inspectors; WAC 296-104-502(1), Washington Administrative Code.	The original Mechanical Data Sheets (MDSs) required that the PTF vessels (UFP-VSL-00062A/B) be designed and fabricated per ASME Code, Section VIII, Div. 1 and be stamped and registered per National Boards of Registration requirements. The stamped vessels are installed in Room P-0106 at Elevation 0'-0" as shown on the PTF General Arrangement Plan drawing. However, subsequent to the installation of each vessel, its MDS was revised with new loading conditions such as seismic and thermal. The Specification for Alteration and Repair of Stamped Vessels requires that the alterations and repairs shall be done in accordance with the requirements of ASME Section VIII, Div. 1 Code, NBIC 2007 Part 3 Code, and WAC 296-104-502(1). It further states that the altered/repaired vessel shall be re-stamped (R-stamped) and re-registered with the National Board of Registration. The requirements of the referenced engineering specifications are inclusive of the design of altered vessel. The requirements include structural design, positive material identification, fabrication tolerances, acceptable welding procedures, welder qualifications and testing records, and NDE inspections. Each vessel is identified as Quality Level (Q) and Seismic Category (SC-I) in the MDS and drawings. The requirements listed in the aforementioned codes, documents, and standards identified in Specification for Alteration and Repair, are adequate and acceptable for the repair work of the vessel's internal vessels supports and piping supports and associated components.

	Information Assessed	Source of Information	Assessment
Design (cont'd)	Vessel repair work of modifying the internals will not compromise vessel's integrity and the design calculations for the altered vessel demonstrate that sound engineering principles of construction are used	Drawings, Mechanical Data Sheets, and Specifications listed above under References; ASME Boiler & Pressure Vessel Code, Section VIII, Div. 1, Rules for Construction of Pressure Vessels; 24590-PTF-MVC-UFP-00023, Rev. B, UFP-VSL-00062A/B/C, Ultra Permeate Collection Vessel Stress Analysis with ANSYS (BNI Design Calculation); 24590-PTF-RPT-MS-10-002, Rev. 0, Buckling Evaluation for Vessels Onsite that Need a Construction Access Through the Vessel Shell; 24590-QL-POD-MVA0-00001-09-07, Rev. 00B, Vessel Code Calculations (Vendor Code Calculations); NBIC 2007, Part 3 with addenda, National Board Inspection Code, National Board of Boiler and Pressure Vessel Inspectors; WAC 296-104-502(1), Washington Administrative Code.	The PTF Vessels (UFP-VSL-00062A/B) are standard stamped and registered ASME Code Section VIII, Div. 1 vessels. These stamped, registered, and installed vessels comply with the requirements stated in the original MDSs. However, the MDSs have been revised after the installation of the vessels. The revised current MDSs show new design loading conditions such as seismic and thermal. Subsequent to the issuance of revised loading conditions, BNI performed Design Calculation of the vessels as a supplement to the Vendor Code Calculations. The BNI Design Calculation determined initially that the original vessels configuration do not sustain the new loading conditions of the revised MDSs. Series of design modifications were performed on the original design which required the redesign of internal components supports system namely the Pulse Jet Mixers (PJM) and Charge Vessel supports and piping and pipe supports as detailed and shown in Attachments H and I of the BNI Design Calculation document. Each vessel shell wall entry opening of 8 ft x 8 ft size required to perform modifications of support system of the internals was evaluated. The Buckling Evaluation document determined that the structural stresses of the parent vessels with the above mentioned opening for repair work will be well within the allowable limits, therefore, its structural integrity will not be compromised. The Specification for Alteration and Repair of the vessels identifies that all repair work on the stamped vessels will be done in accordance with the requirements of ASME Section VIII, Div. 1, NBIC 2007 Code Part 3, and WAC 296-104-502(1). Review of the drawings and the BNI Design Calculation demonstrate that sound engineering principles of design/construction have been used in the design media. It should be noted that the final evaluation of each parent vessel and its components is not in the scope of this report; however, it will be addressed in their final integrity report.

	Information Assessed	Source of Information	Assessment
Design (cont'd)	Modified internal supports (material, welding details, design configuration) will not compromise vessel's integrity, i.e., the altered vessel has adequate strength, after consideration of the corrosion allowance, to withstand the operating pressure and temperature, and seismic loads	Drawings, Mechanical Data Sheets, and Specifications listed above under References; ASME Boiler & Pressure Vessel Code, Section VIII, Div. 1, Rules for Construction of Pressure Vessels; 24590-PTF-S0C-S15T-00057, Rev. A, Seismic Analysis of Pretreatment Building-WSGM In-Structure Response Spectra; 24590-WTP-MVC-50-00001, Rev. A, Pulse Jet Mixer Overblow Vessel Loads, including ECCN 24590-WTP-MVE-50-00009); 24590-PTF-MVC-UFP-00023, Rev. B, UFP-VSL-00062A/B/C, Ultra Permeate Collection Vessel Stress Analysis with ANSYS (BNI Design Calculation); 24590-QL-POD-MVA0-00001-09-07, Rev. 00B, Vessel Code Calculations (Vendor Code Calculations); NBIC 2007, Part 3 with addenda, National Board Inspection Code, National Board of Boiler and Pressure Vessel Inspectors; WAC 296-104-502(1), Washington Administrative Code.	The MDS and the Specification for Alteration and Repair of Stamped ASME Vessels identify each vessel's new loading conditions and applicable codes for its re-qualification. Detailed requirements for seismic design of the vessels are furnished in the Engineering Specification for Seismic Qualification of Seismic Category I/II Equipment and Tanks. After the installation of the vessels the design loading such as seismic and temperature conditions have been revised per MDSs which necessitated the review of the Vendor Code Calculations for design verification purposes. The BNI Design Calculation was performed using revised seismic forces per Seismic Analysis of PTF document, new thermal conditions, and PJM load per Pulse Jet Mixer Overblow Vessels Loads document, as a supplement to the Vendor Code Calculations. The BNI Design Calculation initially showed that the stamped vessels (UFP-VSL-00062A/B) could not sustain the revised loading conditions stated above. Therefore, in order to qualify each vessel for revised loading conditions including the specified corrosion allowance in the MDS document, the BNI Design Calculation recommended modification of the internals including internal vessels' supports and piping supports and piping system to have adequate strength for the specified design life of 40 years. The Engineering Specification for Alteration and Repair of Stamped ASME Vessel requires that any alterations made to the vessel and its internals shall comply with the requirements of ASME Section VIII, Div.1, NBIC 2007 Code Part 3, and WAC 296-104-502(1). Therefore, the rework/repair modifications performed in compliance to the above listed codes and standards will ensure structural integrity of each parent vessel and its components.

Information Assessed		Source of Information	Assessment
Design (cont'd)	Modified internal supports (material, welding details, and design configuration) will not compromise integrity of pulse jet mixers and charge vessels.	Drawings, Mechanical Data Sheets, and Specifications listed above under References; 24590-WTP-DC-ST-04-001, Rev. 3A, Seismic Analysis and Design Criteria; ASME Boiler & Pressure Vessel Code, Section VIII, Div. 1, Rules for Construction of Pressure Vessels; 24590-PTF-S0C-S15T-00057, Rev. A, Seismic Analysis of Pretreatment Building-WSGM In-Structure Response Spectra; 24590-WTP-MVC-50-00001, Rev. A, Pulse Jet Mixer Overblow Vessel Loads, including ECCN 24590-WTP-MVE-50-00009); 24590-PTF-MVC-UFP-00023, Rev. B, UFP-VSL-00062A/B/C, Ultra Permeate Collection Vessel Stress Analysis with ANSYS (BNI Design Calculation); NBIC 2007 Code, Part 3 with addenda, National Board Inspection Code, National Board of Boiler and Pressure Vessel Inspectors; WAC 296-104-502(1), Washington Administrative Code.	The MDS for each vessel identifies its operating pressure and temperature ranges, the materials selected for the vessel and its internals, the corrosion allowance, the quality level, and the seismic design requirements. The ASME Code, Section VIII, Div. 1 Code, requires that corrosion allowance material be considered when evaluating the adequacy of vessel components for these loads at end of its life. Detailed requirements for seismic design of the vessels are furnished in the Engineering Specification for Seismic Qualification of Seismic Category I/II Equipment and Tanks. The vendor drawings show that each vertical parent vessel houses 12 internal vessels; six pulse jet mixers and six charge vessels, all built with using 316 stainless steel plates (max. 0.03% C dual certified). These internal vessels are supported off from the parent vessel and some of them from an adjoining internal vessel. The Engineering Specification for Alteration and Repair of Stamped ASME vessel requires that any alterations made to each vessel and its internals shall comply with the requirements of ASME Section VIII, Div. 1, NBIC 2007 Code Part 3, and WAC 296-104-502(1). The BNI Design Calculation reviewed shows that the modified vessel will withstand the loading conditions identified in MDS, Seismic Analysis of PTF, and Pulse Jet Mixer Overblow Vessel Loads documents. Therefore, the structural integrity of each vessel and its internals will not be compromised.

	Information Assessed	Source of Information	Assessment
Foundation	The vessel support and foundation of the altered/modified vessel will sustain modified full vessel load.	Mechanical Data Sheets and Specifications listed above under References; 24590-WTP-DC-ST-04-001, Rev. 3A, Seismic Analysis and Design Criteria; 24590-WTP-DC-ST-01-001, Rev. 12D, Structural Design Criteria; 24590-PTF-MVC-UFP-00023, Rev. B, UFP-VSL-00062A/B/C, Ultra Permeate Collection Vessel Stress Analysis with ANSYS (BNI Design Calculation).	The MDS for vessels (UFP-VSL-00062A/B) requires that each vessel's support system is to be designed in accordance with the applicable provisions specified in Seismic Analysis and Design Criteria and Engineering Specification for Seismic Qualification of Seismic Category I/II Equipment and Tanks. The requirements of the above listed two documents require the use of Structural Design Criteria. The BNI Design Calculation reviewed show that vessels' support skirt resting on a base plate is adequately designed to sustain the applicable loads of the modified vessel. The support skirt base plate in turn is anchored to floor with welds to the plates embedded in the concrete slab. The slab is supposed to sustain full load of the vessels, however, their assessment is not in the scope of this integrity assessment. It will be covered under a separate report.

R11249138

MECHANICAL SYSTEMS DATA SHEET: VESSEL

PLANT ITEM No.

24590-PTF-MV-UFP-VSL-00062A

Project:	***RPP-WTP***	P&ID:	***24590-PTF-M6-UFP-00004001, 24590-PTF-M6-UFP-00005007, 24590-PTF-M6-UFP-00006007, 24590-PTF-M6-UFP-00015001***
Project No:	***24590***	Calculations:	***Attachment 1 (Page 1 of 2)***
Project Site:	***Hanford***	Vessel Drawing	***24590-PTF-MV-UFP-00005***
Description:	***Ultrafilter Permeate Collection Vessel***	Reports/Other Documents	***Attachment 1 (Page 1 of 2)***

ISSUED BY RPP-WTP PDC

Reference Data

Charge Vessels (Tag Numbers)	***UFP-VSL-00032, UFP-VSL-00033, UFP-VSL-00034, UFP-VSL-00072, UFP-VSL-00073, UFP-VSL-00082***
Pulsejet Mixers / Agitators (Tag Numbers)	***UFP-PJM-00018, UFP-PJM-00019, UFP-PJM-00020, UFP-PJM-00021, UFP-PJM-00022, UFP-PJM-00052***
RFDs/Pumps (Tag Numbers)	***UFP-RFD-00027, UFP-RFD-00028, UFP-RFD-00030, UFP-RFD-00037, UFP-RFD-00038, UFP-RFD-00049***

Design Data

Quality Level		***Q (Note 11)***	Fabrication Specs	***24590-WTP-3PS-MV00-T0001***		
Seismic Category		***SC-I***	Design Code	***ASME Section VIII, Div 1***		
Service/Contents		***Radioactive Liquid***	Code Stamp	***Yes***		
Design Specific Gravity		***1.5***	NB Registration	***Yes***		
Maximum Operating Volume	gal	***30,058***	Weights (lbs)	Empty	Operating	Test
Total Volume	gal	***34,700***	Estimated	***103,000***	***512,285***	***401,100***
Environmental Qualification		***See EQ Sections***	11			

Inside Diameter	inch	***180***			Wind Design	***Not Required***	
Length/Height (TL-TL)	inch	***255***			Snow Design	***Not Required***	
		Vessel Operating	Vessel Design	Coil/Jacket Design	Seismic Design	***24590-WTP-3PS-MV00-T0002 24590-WTP-3PS-SS90-T0001***	
Internal Pressure	psig	***ATM***	***15***	***N/A***			
External Pressure	psig	***1.5***	***2.0 (Note 14)***	***N/A***	Postweld Heat Treat	***Not Required***	
Temperature	°F	***133***	***230***	***N/A***	Corrosion Allowance	Inch	***0.04***
Min. Design Metal Temp.	°F	***40***					

Materials of Construction

Component	Material	Minimum Thickness / Size	Containment
Top Head	***SA 240 316 (Note 1)***	***See Drawing***	***Auxiliary (Note 6)***
Shell	***SA 240 316 (Note 1)***	***See Drawing***	***Primary (Note 6)***
Bottom Head	***SA 240 316 (Note 1)***	***See Drawing***	***Primary (Note 6)***
Support	***SA 240 304 (Note 1)***	***See Drawing***	***N/A***
Jacket/Coils/Half-Pipe Jacket	***N/A***	***N/A***	***N/A***
Internals	***SA 240 316 (Note 1)***	***See Drawing***	***Thermowells Primary***
Pipe Nozzles	***SA 312 TP316 (Note 1)***	***See Drawing***	***Primary (Note 6)***
Forgings/ Bar stock	***SA 182 F316 (Note 1)***	***See Drawing***	***N/A***
Wash Ring Pipe	***SA 312 TP316 (Note 1)***	***See Drawing***	***N/A***
Bolting/ Gaskets	***N/A***	***N/A***	***N/A***

Miscellaneous Data

Orientation	***Vertical***	Support Type	***Skirt***
Insulation Function	***Not Applicable***	Insulation Material	***Not Applicable***
Insulation Thickness (inch)	***Not Applicable***	Internal Finish	***Note 3***
		External Finish	***Note 3***

Notes/Remarks

11

Note 1: ***Maximum 0.030% carbon.***

Note 2: ***Deleted.***

Note 3: ***Welds de-scaled as laid.***

Note 4: ***Vessel volumes are approximate and do not account for the manufacturing tolerances, nozzles, and displacement of internals.***

Note 5: ***This vessel is in a Black Cell.***

Note 6: ***All welds forming part of the primary and auxiliary containment including nozzle attachment welds shall be subjected to 100% volumetric examination.***

Note 7: ***Contents of this document are Dangerous Waste Permit affecting.***

Note 8: ***Deleted as per Report No. 24590-WTP-RPT-M-04-0007 Rev. 0 dated Nov. 01, 2004.***

Note 9: ***Deleted***

Note 10: ***Deleted***

Note 11: ***Vessel to be designed, fabricated, tested to Q, L-1 requirements defined in 24590-WTP-3PS-MV00-T0001.***

Note 12: ***Deleted.***

Note 13: ***If any Sections contains a revision triangle next to the Section heading, this means the entire section has been revised or is new - the entire section must be reviewed for changes/additions.***

Note 14: ***External design pressure of 2.0 psig is based on a normal operating pressure of -35 in WG (1.26 psig) with an additional margin (see 24590-PTF-M6C-PVP-00017).***

Note 15: ***Revised Design Data, revised P&IDs, revised Calculation, added Reports/Other Documents change to parent vessel cyclic data, change to hydrodynamic loads for normal operations, revised single overblow loads, added MOB loads, change to parent vessel cyclic data, change to PJM cyclic data, change to CV cyclic data, added nozzle loads, added Equipment Qualification Data Sheet and Notes, added DOE Radioactive Material Disclaimer, added E&NS table and signature, revised Note 9, added Notes 11 through 15, added Attachment 1 for BNI use only.***

Note 16: ***Revised as follows: operating and design temperatures and the Hydrodynamic Loading section including overblow.***

Equipment Cyclic Data Sheet - Parent Vessel

Component Plant Item Number:	*PTF-MV-UFP-VSL-00062A*
Component Description	*Ultrafilter Permeate Collection Vessel (Parent Vessel)*

The information below is provisional and envelopes operational duty for fatigue assessment. It is not to be used as operational data.

Materials of Construction	*ASME SA 240 316 with max. Carbon of 0.030%*
Design Life	*40 Years*
Component Function and Life Cycle Description 11	*This vessel collects permeate from the Ultrafiltration tube units. The permeate is transferred from this vessel to the Cesium Ion Exchange Process System, vessel CXP-VSL-00004, for further processing. The permeate is also sampled to check for solids in this vessel. The operating cycle for this vessel, filled then emptied, is approximately 24 hours.*

Load Type		Min	Max	Number of Cycles	Comment
Design Pressure	psig	*-2.0*	*15*	*10*	*Nominal assumption for testing*
Operating Pressure	psig	*-1.5* *0* 11	*0* *2.8*	*7.0E6* *40*	*Normal Operations* *Loss of Power*
Operating Temp	°F	*59*	*133*	*13300*	
Contents Specific Gravity		*1.0*	*1.5*	*13300*	*Assume vessel empty for min value*
Contents Level	inch	*27*	*288*	*13300*	
Localized Features					
Nozzles		*Within 9 °F of operating temperature range.*		*As above*	

Notes

- *Cycle increase: Increase the numbers of operational cycles given above by 10% to account for commissioning duty unless otherwise noted.*
- *DELETED*

Equipment Cyclic Data Sheet - PJMs

Component Plant Item Number:	*UFP-PJM-00018, UFP-PJM-00019, UFP-PJM-00020, UFP-PJM-00021, UFP-PJM-00022, UFP-PJM-00052*
Component Description	*Pulse Jet Mixers*

The information below is provisional and envelopes operational duty for fatigue assessment. It is not to be used as operational data.

Materials of Construction	*ASME SA 240 316 with max. Carbon of 0.030%*
Design Life	*40 Years*
Component Function and Life Cycle Description	*Pulse jet mixers (PJMs) are cyclically loaded using vacuum to fully fill the PJM with process liquid and compressed air to fully empty the PJM. The PJMs are contained within a parent vessel with varying liquid level. They shall be designed to cycle between the maximum design pressure and the minimum design pressure plus the external static head imposed by the parent vessel. The PJM supports shall be designed to cycle between fully buoyant (PJM empty and parent vessel full) and fully loaded (PJM full and parent vessel empty) states. Thrust load shall be applied only to the fully buoyant state. Assume the parent vessel is full for 50% of the number of PJM cycles.*

Load Type		Min	Max	Number of Cycles	Comment
Design Pressure	psig	*FV*	*80* 11	*100*	*Nominal assumption for testing, not combined with other load cases*
Operating Pressure	psig	*FV*	*25* 11	*1.9E7* 11	
Operating Temperature	°F	*59*	*133*	*13300*	*Same as Parent Vessel*
Contents Specific Gravity		*1.0*	*1.5*	*13300* 11	*Assume for buoyancy PJM is empty*
Contents Level	inch	*Empty*	*Flooded*	*1.9E7* 11	
Thrust 11	lbf	*-394*	*394*	*1.9E7*	
Localized Features					
Nozzles		*Within 9°F of operating temperature range.*		*As above*	
Supports		*Buoyant*	*Loaded*	*1.9E7* 11	

Notes

- ***Cycle increase: Increase the numbers of operational cycles given above by 10% to account for commissioning duty unless otherwise noted.***
- ***DELETED***

Equipment Cyclic Data Sheet - Charge Vessels

Component Plant Item Number:	*PTF-MV-UFP-VSL-00032, PTF-MV-UFP-VSL-00033, PTF-MV-UFP-VSL-00034, PTF-MV-UFP-VSL-00072, PTF-MV-UFP-VSL-00073, PTF-MV-UFP-00082*
Component Description	*Charge Vessels for the following RFDs: UFP-RFD-00027, UFP-RFD-00028, UFP-RFD-00030, UFP-RFD-00037, UFP-RFD-00038, UFP-RFD-00049*

The information below is provisional and envelopes operational duty for fatigue assessment. It is not to be used as operational data.

Materials of Construction	*ASME SA 240 316 with max. Carbon of 0.030%*
Design Life	*40 Years*
Component Function and Life Cycle Description	*These charge vessels are cyclically loaded using vacuum to fully fill the charge vessel with process liquid and compressed air to fully empty the charge vessel. The charge vessels are contained within a parent vessel with varying liquid level. They shall be designed to cycle between the maximum design pressure and the minimum design pressure plus the external static head imposed by the parent vessel. The charge vessel supports shall be designed to cycle between fully buoyant (charge vessel empty and parent vessel full) and fully loaded (charge vessel full and parent vessel empty).*

Load Type		Min	Max	Number of Cycles	Comment
Design Pressure	psig	*FV*	*135* 11	*100*	*Max value based on operating plus a margin - not to be used concurrent with any other occasional load case.*
Operating Pressure	psig	*FV*	*80*	*4.1E6* 11	*Maximum value for all charge vessels 24590-PTF-MVC-10-00003*
Operating Temperature	°F	*59*	*133*	*13300*	*Same as parent Vessel*
Contents Specific Gravity		*1.0*	*1.5*	*13300*	*For Buoyancy assume CV is empty*
Contents Level	inch	*Empty*	*Flooded*	*4.1E6* 11	*Maximum value for all charge vessels 24590-PTF-MVC-10-00003*
Localized Features					
Nozzles		*Within 9°F of operating temperature range.*		*As above*	
Supports		*Buoyant*	*Loaded*	*4.1E6* 11	*Maximum value for all charge vessels 24590-PTF-MVC-10-00003*

Notes

- ***Cycle increase: Increase the numbers of operational cycles given above by 10% to account for commissioning duty unless otherwise noted.***
- ***DELETED***

Hydrodynamic Loads Due to PJM Operations 11

Normal operation imposes a cyclical load as described in the following table:

6 PJM Class	Radial Direction		Axial Direction		Number of Cycles
	Peak Positive (psi)	Peak Negative (psi)	Peak Positive (psi)	Peak Negative (psi)	
Targets above 12" from vessel bottom	0.22	-0.02	0.4	-0.01	1.9E7
Targets 6" to 12" from vessel bottom	0.29	-0.09	0.48	-0.74	

The hydrodynamic pressure applies across the projected area of the component. Positive hydrodynamic forces act in the radial, outward direction and the vertical, upward direction. Seller shall apply the radial load simultaneously in the radial direction and normal to the radial direction in the horizontal plane.

Design Considerations for Loads Induced by Pulse Jet Mixers (PJMs)

Pulse Jet Mixers (PJMs) are designed to mix the vessel contents using a liquid jet discharge. PJMs are driven by compressed air. The mixing is required to enhance heat transfer, to break up hydrogen-containing particles, and to homogenize the solution. Normally, the PJMs are operated simultaneously within the parent vessel.

The PJMs operate in the following three cycles: Suction, Drive and Vent. During the suction cycle a vacuum is created in the PJM headspace and the level within the PJM rises to fill the PJM. During the drive cycle the PJM is pressurized and liquid is discharged. During the vent cycle, the pressure in the headspace approaches atmospheric and the level within the PJM is allowed to reach equilibrium.

Vessel components shall be designed to withstand loading induced by PJM operations as described herein.

Normal Operations: Liquid flows around internal structures within the parent vessel producing hydrodynamic loads such as drag and vortex shedding.

To mitigate the dynamic effects, the following pipe sizes dipped internal to the vessel are required to have a minimum first natural frequency that is double the vortex shedding frequency:

Nominal Pipe Size	Minimum First Natural Frequency
1 inch (<12" from bottom head)	14 Hz*
1 inch (>12" from bottom head)	12 Hz*
2 inch	8.0 Hz*
3 inch	5.0 Hz**

* See 24590-WTP-MVC-50-00001

** By extrapolation from 1 inch and 2 inch

Overblow Condition: Occasionally the drive cycle lasts too long and compressed air is discharged from the PJM. Overblows can also occur during system calibration. One or multiple PJMs may overblow at any time. These conditions induce acoustic and bubble rise loads on structures.

All internal components shall be designed for the combination of normal operational hydrodynamic loads and overblow loads. Single overblows (SOB) are assumed to act concurrently with the seismic event, however multiple overblows (MOB) are not assumed to act concurrently with the seismic event. Figure 1 (below) provides the acoustic load intensity that encompasses both SOB and MOB.

PJM Overblow Loads

Discussion: During normal operation, pulse jet mixers (PJMs) mix the fluid by pulling in (suction) and pushing out (drive) fluid. During an upset condition, designated as an 'overblow', air is discharged following the drive cycle of one or more PJMs. The load consists of acoustic pressure (2Hz to 200Hz) developed in the first 200ms of the event and a load due to the bubble rising through the fluid.

The acoustic load and the bubble load are design loads as defined by ASME B&PVC, Section 8, Division 1, UG-22, applied statically. The acoustic load is not added to the bubble rise load because they occur at different times during the overblow event.

Acoustic Load

- ***The acoustic design load in Figure 1 is applied to the visible (as viewed from the overblow origin) surface of cylindrical targets such as pipes, charge vessels, and PJMs. The load is applied in the direction normal to the principal axis of the target as illustrated in Figure 2. Note: The intended net effective load on the target is equal to the projected (i.e. cross-sectional) area of the object times the acoustic design load (psi) indicated in Figure 1.***
- ***Each target is considered independent of the surrounding targets: e.g. the surrounding targets do not impede the acoustic wave by casting a shadow, as illustrated in Figure 2.***
- ***The load is not applied to small supports such as gussets, brackets, tabs, clamps, and bolts because they are rigid and the pressure drop across the target is negligible.***
- ***When the vessel contains multiple PJMs, the load from one PJM is independent of the load from other PJMs. The loads are not additive for multiple overblows.***
- ***No internal components shall be placed within 5 PJM nozzle diameters (5 * 4 in = 20 in) of a spherical zone centered at any overblowing PJM nozzle.***

Figure 1: Acoustic Design Load

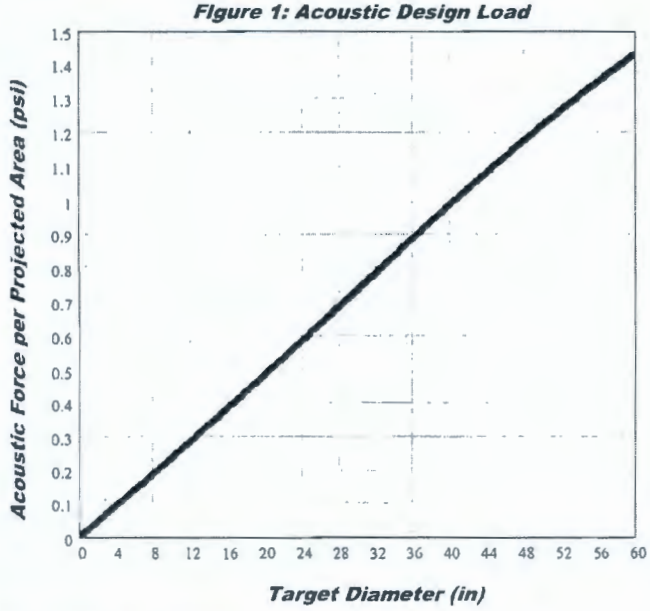

Figure 2: Load Application

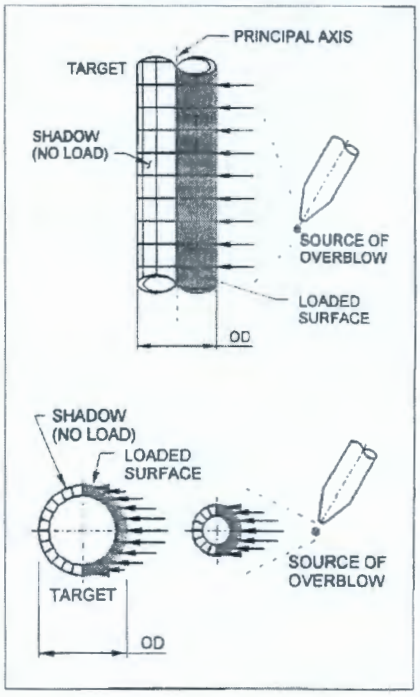

The following data is required to determine the load:

- ***Target Diameter***
- ***Target Principal Axis***
- ***Overblow Source Coordinates***

Number of Acoustic Cycles	***1000 events X 40 cycles/event for a total of 40,000 acoustic cycles.***
Bubble Rise Load	***A vertical force per projected area of 1.7 psi is applied to the surfaces in the 36-inch diameter cylindrical zone centered at the overblowing PJM(s). The bubble can be at any elevation above the overblowing PJM and only affects one zone (36-inch diameter region) at a time. When there are multiple PJMs in a vessel (MOB), each PJM has it's own bubble. To simplify analysis the bubble can be applied in a continuous cylindrical zone above each PJM top head.***
Number Bubble Rise Cycles	***1000 events X 1 cycle/event***

Nozzle Loads

Nozzle	Design Pressure (psig) (Note E)	Design Temp (°F) (Note E)	Size	Load Type	Loads - lbs			Moments - ft-lbs		
					Fx	Fy	Fz	Mx	My	Mz
N05	15	138	2"OD	Weight	50	60	50	75	75	75
				Seismic	106	70	106	158	237	237
				Thermal	30	20	30	40	70	70
N06	15 △11	230 △11	6"	Weight	N06 is parent nozzle, nozzle loads are applied via N06A, N06B, N06C					
				Seismic						
				Thermal						
N06A (Note C)	150	140	1"	Weight	15	20	15	20	20	20
				Seismic	30	20	30	37	55	55
				Thermal	10	10	10	10	20	20
N06B (Note C)	150	140	1"	Weight	15	20	15	20	20	20
				Seismic	30	20	30	37	55	55
				Thermal	10	10	10	10	20	20
N06C (Note C)	150	140	1"	Weight	15	20	15	20	20	20
				Seismic	30	20	30	37	55	55
				Thermal	10	10	10	10	20	20
N07	170	150	2"	Weight	50	71	50	75	75	75
				Seismic	106	70	106	264	237	257
				Thermal	45	33	30	41	70	130
N09	30	212	2"	Weight	50	60	50	75	75	75
				Seismic	106	70	106	158	237	237
				Thermal	67	86	45	245	70	249
N10	30	111	2"	Weight	50	75	50	75	75	75
				Seismic	106	70	106	158	237	237
				Thermal	30	60	30	43	70	85
N11	15	160	2"	Weight	50	98	50	75	75	75
				Seismic	106	71	106	158	237	237
				Thermal	30	20	30	40	70	70
N12	124	140	2"OD	Weight	50	60	50	75	75	75
				Seismic	106	70	106	158	237	237
				Thermal	30	20	30	40	70	70
N13	80	111	2"OD	Weight	50	60	50	75	75	75
				Seismic	106	70	106	158	237	237
				Thermal	30	20	30	40	70	70
N14	80	111	2"	Weight	50	60	50	75	75	75
				Seismic	106	70	106	158	237	237
				Thermal	30	20	30	40	70	70
N16	124	140	2"	Weight	50	104	50	75	75	75
				Seismic	106	77	106	158	237	237
				Thermal	30	20	30	94	70	70
N17	150	185	2"	Weight	50	60	50	75	75	90
				Seismic	106	70	177	158	453	237
				Thermal	30	20	30	40	70	70
N18	124	140	2"	Weight	50	102	50	75	75	75
				Seismic	106	93	106	197	237	237
				Thermal	30	20	30	99	70	70

Nozzle	Design Pressure (psig) (Note E)	Design Temp (°F) (Note E)	Size	Load Type	Loads - lbs			Moments - ft-lbs		
					Fx	Fy	Fz	Mx	My	Mz
N19	124	140	2"	Weight	50	72	50	75	75	75
				Seismic	106	70	106	158	237	237
				Thermal	30	25	30	60	70	82
N20	124	140	2"	Weight	50	72	50	75	75	75
				Seismic	106	70	106	158	237	237
				Thermal	30	28	30	112	70	85
N21	124	140	2"	Weight	50	81	50	75	75	75
				Seismic	106	70	106	158	237	237
				Thermal	30	21	30	84	70	70
N22	15	185	6"	Weight	210	335	210	598	374	374
				Seismic	663	443	663	2920	3638	3638
				Thermal	180	160	240	640	1280	1280
N23	124	140	3"	Weight	52	227	52	119	75	81
				Seismic	162	166	162	468	701	701
				Thermal	50	40	60	341	240	240
N24	124	140	3"	Weight	52	186	52	119	75	75
				Seismic	162	133	162	468	701	701
				Thermal	50	50	60	227	240	240
N25	124	140	3"	Weight	52	190	52	119	75	75
				Seismic	162	136	162	468	701	701
				Thermal	50	78	60	354	240	240
N26	124	140	3"	Weight	52	225	52	119	75	150
				Seismic	168	236	162	468	701	736
				Thermal	50	40	60	283	240	240
N28	75	185	4"	Weight	87	212	87	216	135	135
				Seismic	274	194	498	2734	1320	1365
				Thermal	80	70	100	230	450	450
N29	75	185	4"	Weight	87	205	87	216	135	135
				Seismic	466	183	274	1091	1320	1443
				Thermal	134	70	100	266	450	450
N30	75	185	4"	Weight	87	253	87	216	135	135
				Seismic	274	192	318	1468	1320	1320
				Thermal	86	143	100	230	450	450
N32	75	111	4"	Weight	87	271	87	216	135	135
				Seismic	359	227	385	2703	1320	1976
				Thermal	163	173	100	541	450	739
N34	134	175	2"	Weight	50	125	50	75	75	75
				Seismic	106	90	106	158	237	237
				Thermal	30	20	30	40	70	70
N35	134	175	2"	Weight	50	114	50	75	75	75
				Seismic	106	82	106	194	237	311
				Thermal	30	37	30	110	70	73
N36	134	175	2"	Weight	50	88	50	75	75	75
				Seismic	106	70	106	158	237	237
				Thermal	30	38	30	86	70	86
N37	15	120	6"	Weight	210	485	210	1092	374	1285
				Seismic	663	637	767	2423	4153	3638
				Thermal	180	160	240	640	1280	1280

Nozzle	Design Pressure (psig) (Note E)	Design Temp (°F) (Note E)	Size	Load Type	Loads - lbs			Moments - ft-lbs		
					Fx	Fy	Fz	Mx	My	Mz
N38 △11	169	120	2"	Weight	5	155	15	45	15	20
				Seismic	100	135	85	385	165	450
				Thermal	10	30	10	10	5	5
N39	15 △11	230 △11	24"	Weight	Manway - No Loads Applied					
				Seismic						
				Thermal						
N40	125	120	3"	Weight	52	84	52	119	75	75
				Seismic	162	108	162	506	701	701
				Thermal	50	59	60	162	240	240
N41	124	140	2"	Weight	50	93	50	75	75	75
				Seismic	106	73	106	158	237	237
				Thermal	30	20	30	91	70	70
N44	75	111	4"	Weight	87	214	87	216	135	135
				Seismic	327	215	364	2330	1320	1672
				Thermal	233	210	100	328	450	1021
N45	124	140	3"	Weight	52	180	52	119	75	75
				Seismic	162	129	162	468	701	701
				Thermal	50	49	60	238	240	240
N46	15	160	2"	Weight	50	60	50	75	75	75
				Seismic	106	70	106	158	237	237
				Thermal	30	36	30	40	70	70

Notes for Nozzle Loads

A. Direction of load application is per diagrams in 24590-WTP-3PS-MV00-T0001 Appendix A.

B. For nozzles in head: x = North/South, y = Vertical, and z = East/West - Vessel 0° defined as north.

C. Values provided at plate on top of parent nozzle.

D. Nozzle loads shown are to be used in place of those specified in 24590-WTP-3PS-MV00-T0001 - do not apply thermal reduction factors.

E. Nozzle Pressures and Temperatures to be used to qualify the nozzles only.

F. All Pretreatment RGM Seismic Piping Nozzles loads from Plant Design shall have a 1.75 load factor applied to address coupling effects between the flexible vessels and piping in accordance with the Seismic Classification and Evaluation for the Pretreatment Facility Piping and Vessels, 24590-WTP-RPT-ENG-09-040. △11

EQUIPMENT QUALIFICATION DATASHEET (EQD)

Equipment Identification		
Full Component Tag Number or BNI Stock Code Number	24590-PTF-MV-UFP-VSL-00062A	Safety Classification ☒ SC ☐ SS ☐ APC-PAM
Equipment Datasheet Number	24590-PTF-MVD-UFP-00005	
Description	Ultrafilter Permeate Collection Vessel	Seismic Category ☒ SC-I ☐ SC-II ☐ SC-III ☐ SC-IV ☐ SC-III Seismic Interaction only
Location (Facility / Building and Room No.)	Pretreatment Building; located in Room P-0106, Elev. 0'-00", column lines K.5/10.5	
Safety Function(s)	UFP-VSL-00062A (parent vessel) is considered a high active process vessel credited to prevent spills of large quantities of high activity process liquid and provide primary confinement for radioactive releases. Reference: 24590-WTP-PSAR-ESH-01-002-02, Table 4A-1, Preliminary Documented Safety Analysis to Support Construction Authorization; PT Facility Specific Information.	
Equipment Safety Function Type	☒ Passive Mechanical ☐ Active Mechanical	☐ Electrical
Seismic Safety Function ☒ Yes ☐ No	Seismic Operability Requirements ☒ During Seismic Event ☒ After Seismic Event	☐ None

Equipment Environmental Qualification (EEQ)

(Parameter values stated in this section do not include process conditions or operation induced conditions)

Classification of Environment ☒ Mild ☐ Harsh

Qualified Life (years) ☒ 40 ☐ Other

Parameter Type/Units	Parameter Value	Parameter Duration (number)	Duration Units	WTP Source Document Number
Normal Ambients				
High Temperature (°F)	113	Note a	Years	24590-PTF-U0D-W16T-00001, E-Note 1
Low Temperature (°F)	59	Note b	N/A	24590-PTF-U0D-W16T-00001, E-Note 1
High Relative Humidity (%RH)	90	Note c	N/A	24590-PTF-U0D-W16T-00001, E-Note 1
Low Relative Humidity (%RH)	5	Note c	N/A	24590-PTF-U0D-W16T-00001, E-Note 1
High Pressure (in.-w.g.)	0 (E-Note 2)	Note d	N/A	24590-PTF-U0D-W16T-00001, E-Note 1
Low Pressure (in.-w.g.)	(-) 1.4 (E-Note 2)	Note d	N/A	24590-PTF-U0D-W16T-00001, E-Note 1
Radiation Dose Rate (mRad/hr)	255000 (E-Note 4)	40 (E-Note 7)	Years (Note e-1)	24590-PTF-U0D-W16T-00001, E-Note 1
Plant/Process Induced Vibration	☐ Yes ☒ No			
Additional Normal Ambient Information:	N/A			

Equipment Environmental Qualification (EEQ) *(continued)*

Parameter Type/Units	Parameter Value	Parameter Duration (number)	Duration Units	WTP Source Document Number
Abnormal Ambients				
High Temperature (°F)	128	8	hours / year	24590-PTF-U0D-W16T-00001, E-Note 1
Low Temperature (°F)	40	Note b	N/A	24590-PTF-U0D-W16T-00001, E-Note 1
High Relative Humidity (%RH)	100c	Note c	N/A	24590-PTF-U0D-W16T-00001, E-Note 1
Low Relative Humidity (%RH)	6	Note c	N/A	24590-PTF-U0D-W16T-00001, E-Note 1
High Pressure (in.-w.g)	4 (E-Note 2)	Note d	N/A	24590-PTF-U0D-W16T-00001, E-Note 1
Low Pressure (in.-w.g)	(-) 7.3 (E-Note 2)	Note d	N/A	24590-PTF-U0D-W16T-00001, E-Note 1
Radiation Dose Rate (mR/hr)	255000 (E-Note 4)	0 (E-Note 7)	Years (Note e-1)	24590-PTF-U0D-W16T-00001, E-Note 1
Exposure to Wet Sprinkler System	☐ Yes ☒ No	N/A	hours	24590-PTF-U0D-W16T-00001, E-Note 1
Additional Abnormal Ambient Information	N/A			
Design Basis Events (DBE) Ambients				
High Temperature (°F)	138	1000	hours	24590-PTF-U0D-W16T-00001, E-Note 1
Low Temperature (°F)	40	Note b	N/A	24590-PTF-U0D-W16T-00001, E-Note 1
High Relative Humidity (%RH)	100c	40	hours	24590-PTF-U0D-W16T-00001, E-Note 1
Low Relative Humidity (%RH)	4	1000	hours	24590-PTF-U0D-W16T-00001, E-Note 1
High Pressure (in.-w.g)	4 (E-Note 2)	8	hours	24590-PTF-U0D-W16T-00001, E-Note 1
Low Pressure (in.-w.g)	(-) 7.3 (E-Note 2)	1000	hours	24590-PTF-U0D-W16T-00001, E-Note 1
Radiation Dose Rate (mR/hr)	255000 (E-Note 4)	0 (E-Note 7)	hours	24590-PTF-U0D-W16T-00001, E-Note 1
Submergence	☐ Yes ☒ No	N/A	hours	24590-PTF-U0D-W16T-00001, E-Note 5
Chemical/Spray Exposure	☒ Yes ☐ No	12.5	hours	24590-PTF-U0D-W16T-00001, E-Note 1
Additional DBE Information	N/A			

DBE Chemical Exposure Details

DBE Chemical Exposure Details	
DBE Chemical Types / Concentrations	Nitric Acid (RDP09), 87 °F, 2.5 pH Process Rad Condensate Sodium Hydroxide (FEP01), 103 °F, 14.5 pH Sodium Hydroxide (FEP08a), 104 °F, 11.5 pH Sodium Hydroxide (FEP12a), 104 °F, 11.5 pH Sodium Hydroxide (FEP19), 121 °F, 15.5 pH Sodium Hydroxide (FRP01), 121 °F, 14.5 pH Sodium Hydroxide (FRP02), 110 °F, 14.5 pH Sodium Hydroxide (FRP13), 110 °F, 14.5 pH Sodium Hydroxide (FRP14), 191 °F, 15.5 pH Sodium Hydroxide (HLP11), 113 °F, 14.5 pH Sodium Hydroxide (HLP12), 113 °F, 15.5 pH Sodium Hydroxide (HLP13), 113 °F, 15.5 pH Sodium Hydroxide (PWD01), 106 °F, 14 pH Sodium Hydroxide (TCP05), 120 °F, 15.5 pH Sodium Hydroxide (UFP04), 77 °F, 15.5 pH Sodium Hydroxide (UFP33), 84 °F, 14.5 pH Sodium Hydroxide (2M) Sodium Permanganate (1M) Strontium Nitrate (1M) Water

Electrical Interfaces Supporting the Safety Function	
Power Supply Voltage (VAC, VDC)	N/A
Power Supply Frequency (Hz)	N/A
Power Connection Method	N/A
I/O Signals to/from Equipment	N/A
I/O Connection Method	N/A

Mechanical Interfaces	
Mounting Configuration (orientation)	Vertically Mounted, Skirt
Mounting Method (bolts, welds, etc.)	Welded skirt to ring beam welded to embedment plates. Embedment plate details per 24590-PTF-DD-S13T-00039, 24590-PTF-DD-S13T-00036, 24590-PTF-DD-S13T-00043, and 24590-PTF-DD-S13T-00045
Auxiliary Devices	UFP-PJM-00018, UFP-PJM-00019, UFP-PJM-00020, UFP-PJM-00021, UFP-PJM-00022, UFP-PJM-00052,UFP-VSL-00032, UFP-VSL-00033, UFP-VSL-00034, UFP-VSL-00072, UFP-VSL-00073, UFP-VSL-00082, UFP-RFD-00027, UFP-RFD-00028, UFP-RFD-00030, UFP-RFD-00037, UFP-RFD-00038, UFP-RFD-00049 - all auxiliary devices are located internal to the vessel

EQUIPMENT QUALIFICATION DATASHEET (EQD)

Equipment Seismic Qualification (ESQ)				
Parameter	**Title**	**Reference/Document Number**	**Version / Revision**	**Remarks**
WTP Seismic Design Specification	Engineering Specification for Seismic Qualification of Seismic Category I/II Equipment and Tanks Engineering Specification for Seismic Qualification Criteria for Pressure Vessels	24590-WTP-3PS-SS90-T0001 24590-WTP-3PS-MV00-T0002	2 3	N/A
Specified Seismic Load Parameters	Seismic Analysis of Pretreatment Building - WSGM In-Structure Response Spectra (ISRS)	24590-PTF-S0C-S15T-00057	A	CCN: 203392; WSGM ISRS Curves: Figures 66, 67 and 68

Equipment Qualification Notes and Additional Information

Note a) For thermal aging, the high normal temperature shall be assumed to subsist for 40 years less the duration of the high abnormal temperature. For any lesser qualified life, the normal and abnormal condition durations shall be assigned proportionally. The abnormal temperature is stated to subsist for a certain number of hours per year. It shall be taken to subsist for this number of hours for each year of the qualified life.

Note b) The ability to provide the safety function at the low normal temperature, the low abnormal temperature or the low DBE temperature (whichever be the lowest) shall be established by test, analysis, or operating experience. The thermal aging at these respective low temperatures will be conservatively covered by the thermal aging per item a) above. Therefore, no duration is assigned for the low temperatures.

Note c) The ability to provide the safety function at the extremes of the normal and abnormal humidity conditions, taking into consideration the high and the low normal and high and low abnormal, shall be established by test, analysis, or operating experience. No duration is assigned for the normal and abnormal humidity conditions.

Note d) If the performance of the safety function of the equipment is affected by ambient pressure, the ability to provide the safety function at the extremes of the normal and abnormal pressure conditions, taking into consideration the high and the low normal and the high and low abnormal pressures, shall be established by test, analysis, or operating experience. No duration is assigned to the normal and abnormal pressure conditions.

Note e) (1) If the abnormal radiation dose rate is the same as the normal radiation dose rate, the normal radiation dose rate shall be assumed to subsist for 40 years, or any lesser qualified life, and the duration of the abnormal radiation dose rate is "0."

(2) If the abnormal radiation dose rate is higher than the normal radiation dose rate, the abnormal radiation dose rate shall be assumed to subsist for 40 years, or any lesser qualified life, and the duration of the normal radiation dose rate is "0."

Note f) The DBE conditions shall be taken to subsist for the stated number of hours following the qualified life of the equipment.

Note g) Spray due to fire sprinkler actuation shall be taken to occur once over the entire qualified life duration for a period of 2 hours, even if the qualified life is a period less than 40 years. If spray qualification is provided for DBE conditions (whether for water or chemical spray), then separate qualification for the fire sprinkler spray need not be provided.

Note h) The values stated in this EQD are the ambients and do not include the thermodynamic and radiation conditions imposed by the process fluids, self-heating, etc. The data pertaining to process fluid and service induced parameters are to be taken into account where significant, such as in thermal aging analyses. These data can be obtained from the equipment data sheets or the Equipment Specification.

Note i) Equipment that is to be installed in inaccessible locations must be qualified to a 40-year life without the need for maintenance or replacement.

E-Note 1: BNI (BUYER) shall perform Equipment Environmental Qualification in accordance with 24590-WTP-DC-ENG-06-001, Design Criteria for Equipment Seismic and Environmental Qualification.

E-Note 2: Where pressure is given in inches of water column (in-w.c.) in the source document, it is generally assumed that this is in reference to atmospheric pressure and is therefore equivalent to inches of water gage (in-w.g.)

E-Note 3: BNI (BUYER) shall perform Equipment Seismic Qualification in accordance with the listed parameters and the applicable specification requirements.

E-Note 4: Radiation Dose Rates are for determining shielding requirements only for the black cell and are not at the source (vessel). Since the vessel is all metallic and the source has no neutron components for material embrittlement, the dose rates are of no concern on the vessel or its subcomponents.

E-Note 5: Flood height is 2.08 ft above the floor, bottom of vessel is above this level therefore, no submergence evaluation is required.

E-Note 6: Environmental data shown are for the room only.

EQUIPMENT QUALIFICATION DATASHEET (EQD)

Equipment Qualification Notes and Additional Information
E-Note 7: Normal, Abnormal, and DBE dose rates are the same, therefore, abnormal & DBE doses do not add to total integrated dose based on normal dose rates over 40 years.

DOE Radioactive Materials Disclaimer:
Please note that source, special nuclear and byproduct materials, as defined in the Atomic Energy Act of 1954 (AEA), are regulated at the US Department of Energy (DOE) facilities exclusively by DOE acting pursuant to its AEA authority. DOE asserts, that pursuant to the AEA, it has sole and exclusive responsibility and authority to regulate source, special nuclear, and byproduct materials at DOE-owned nuclear facilities. Information contained herein on radionuclides is provided for process description purposes only.

Screening / Evaluation Required? If yes per 24590-WTP-GPP-SREG-002, E&NS signature required below	X	Yes		No

Approval

Rev	Description	Vessel Engineer	Checked	System Engineer	Reviewed/ MET	E&NS	Approved	Date
0	Issued For Purchase	HK	US/CS	PA	N/A	N/A	SK	10/10/02
1	Revised as Noted	HK	PA/CS	MA	JJ	N/A	MWH	08/18/03
2	Revised as Noted	HK	PA/CS	MA	JJ	N/A	MWH	09/11/03
3	Revised as Noted	HK	PA/CS	MA	JJ	N/A	MWH	12/10/03
4	Revised as Noted	H Khurana	P. Aviguetero C. Slater	M. Askar	J. Julyk	N/A	C. Morley for M. Hoffmann	02/05/04
5	Added hydrodynamic loads and other revisions as noted.	H Khurana	P. Aviguetero R. Tiwari	M. Askar	J. Julyk	N/A	M. Hoffmann	09/08/04
6	Added note 9, deleted note 8. and changes as noted.	H Khurana	P. Aviguetero	M. Askar	J. Julyk	N/A	M. Hoffmann	12/17/05
7	Over-blow cycles revised from 100 to 1000, on page 3. Deleted note 9 on page 2 and revised as noted.	H Khurana	J. Olson R. P. Voria	A.Moretta	CS	N/A	J. Julyk	09/04/05
8	Revised per note 10 on page 2 and as noted	H Khurana	J. Polani P Aviguetero	M. Askar	C. Slater D. Adler	N/A	J. Julyk	10/28/05
9	Revised per Note 15. Supersedes 24590-PTF-MVD-UFP-P0005, Rev 2.	M. Seed	S Jain	D. Vo	D Adler	J Hinckley	J Julyk	05/11/09
10	Revised per Note 16 and as noted by revision triangles.	M Seed	D Harris	D. Vo	D Adler	J Hinckley	J Julyk	06/17/10
11	Incorporated 24590-PTF-MVN-UFP-00047. Revised Equipment Qualification data to new form, Hydrodynamic Loads Due to PJM Operations, and as noted by revision triangles.	M Seed M A Seed	L Rodgers	R Zielinski for B Lindberg R Zielinski	D Adler	J Hinckley	J Julyk	12/22/10

ATTACHMENT 1: Page 1 of 2
REFERENCES for Data Sheets: 24590-PTF-MVD-UFP-00005, 00006, 00007, Rev 11 *(For BNI Use only)*
Vessel Tags: UFP-VSL-00062A/B/C

Data	Document #	Rev	Document Title/ Comments
Quality Level	24590-PTF-M6-UFP-00004001	0	*P&ID Ultrafiltration Permeate Collection System Vessels*
Seismic Category	24590-PTF-M6-UFP-00004001	0	*P&ID Ultrafiltration Permeate Collection System Vessels*
Design Specific Gravity	24590-WTP-RPT-ENG-07-007	0A 11	*Process Stream Properties* / Section 4.18
Max Operating Volume	24590-PTF-M6C-UFP-00005	D	*Vessel Sizing Calc for Ultrafiltration Permeate Vessels UFP-62A, 62B, 62C* / Section 8
Total Volume	24590-PTF-M6C-UFP-00005	D	*Vessel Sizing Calc for Ultrafiltration Permeate Vessels UFP-62A, 62B, 62C* / Section 7.1.20
Inside Diameter	24590-PTF-M6C-UFP-00005	D	*Vessel Sizing Calc for Ultrafiltration Permeate Vessels UFP-62A, 62B, 62C* / Section 8
Length TL-TL	24590-PTF-M6C-UFP-00005	D	*Vessel Sizing Calc for Ultrafiltration Permeate Vessels UFP-62A, 62B, 62C* / Ssection 8
Operating Pressure (external)	24590-PTF-M6C-PVP-00017	A	*HADCRT Analysis of PTF PVP System at various Operating Scenarios* / *(see sheet 14 - the PVP scrubber inlet is controlled to 35 in-wg)* External pressure of 1.5 psig is based on a normal operating pressure of -35 in WG (1.26 psig) with an additional margin. (24590-PTF-M5-V17T-00021001 & 00021004 indicate the process flow diagrams)
Design Pressure (internal)	24590-WTP-DB-ENG-01-001	1P 11	*Basis of Design*
Design Pressure (external)	24590-PTF-M6C-PVP-00017	A	*HADCRT Analysis of PTF PVP System at various Operating Scenarios* / External design pressure of 2.0 psig is based on a normal operating pressure of -35 in WG (1.26 psig) with an additional margin
Operating Temp	24590-WTP-RPT-ENG-07-007	0A 11	*Process Stream Properties, Section 4.18*
Design Temp	24590-WTP-RPT-ENG-07-007	0A 11	*Process Stream Properties* / Section 4.18
Corrosion Allowance, Erosion allowance	24590-PTF-N1D-UFP-00008	5	*Corrosion Evaluation, UFP-VSL-00062A/B/C*
Materials of Construction	24590-PTF-N1D-UFP-00008	5	*Corrosion Evaluation, UFP-VSL-00062A/B/C* / identifies use of 316 SST with max carbon content of 0.03% - this is for material in contact with process fluids, the vessel support material is 304 SST
Cyclic Data (Vessel)	24590-PTF-MVC-10-00003	C	*PTF Vessel Cyclic Datasheet Inputs (24590-PTF-MVE-10-00008)* 11
Cyclic Data (PJM)	24590-PTF-MVC-10-00003	C	*PTF Vessel Cyclic Datasheet Inputs (24590-PTF-MVE-10-00012)* 11
Design Pressure (PJM)	24590-PTF-MVC-10-00003	C	*PTF Vessel Cyclic Datasheet Inputs (24590-PTF-MVE-10-00012)* 11
11 Operating Pressure (PJM)	24590-PTF-MVC-10-00003	C	*PTF Vessel Cyclic Datasheet Inputs*
Operating Temperature (PJM)			*Same as parent vessel*
11 PJM Thrust	24590-WTP-M6C-50-00011	A	*Pulse Jet Mixer Internal Pressures and Thrust*
11 Operating Pressure (Charge Vessels)	24590-PTF-MVC-10-00003	C	*PTF Vessel Cyclic Datasheet Inputs (24590-PTF-MVE-10-00011)*
11 Operating Temperature (Charge Vessels)			*Same as parent vessel*

ATTACHMENT 1: Page 2 of 2
REFERENCES for Data Sheets: 24590-PTF-MVD-UFP-00005, 00006, 00007, Rev 11 *(For BNI Use only)*
Vessel Tags: UFP-VSL-00062A/B/C

Data	Document #	Rev	Document Title/ Comments
Cyclic Data (Charge Vessels)	24590-PTF-MVC-10-00003	C	*PTF Vessel Cyclic Datasheet Inputs (24590-PTF-MVE-10-00011)* 11
Design Pressure (Charge Vessels)	24590-PTF-MVC-10-00003	C	*PTF Vessel Cyclic Datasheet Inputs (24590-PTF-MVE-10-00011)*
Hydrodynamic Loads 11	24590-WTP-MVC-50-00001	A	*Hydrodynamic Loads for Normal PJM Operation in Vessels with Newtonian Fluids* / Section 8 for 6 PJM
Single PJM Overblow Loads	24590-WTP-MVC-50-00008	C	*Hydrodynamic Loads for PJM Overblow in Vessels* / Figure 5, sheet 27
PJM Overblow Loads	24590-WTP-MVC-50-00011	B	*Pulse Jet Mixer Overblow Vessel Loads*
Single Overblow Cycles	24590-PTF-MVC-10-00003	C	*PTF Vessel Cyclic Datasheet Inputs* (24590-PTF-MVE-10-00004) 11
Multiple Overblow Cycles	24590-PTF-MVC-10-00003	C	*PTF Vessel Cyclic Datasheet Inputs* (24590-PTF-MVC-10-00004) 11
Nozzle Loads 11	CCN 126197 (UFP-62A) CCN 126198 (UFP-62B) CCN 125817 (UFP-62C) CCN 224448 (UFP-62A) CCN 224449 (UFP-62B) CCN 224450 (UFP-62C)	N/A N/A N/A N/A N/A N/A	*Nozzle Loads for UFP-VSL-00062A* *Nozzle Loads for UFP-VSL-00062B* *Nozzle Loads for UFP-VSL-00062C* *Supplemental Nozzle Design Loads for UFP-VSL-00062A (Supplements CCN 126197)* *Supplemental Nozzle Design Loads for UFP-VSL-00062B (Supplements CCN 126198)* *Supplemental Nozzle Design Loads for UFP-VSL-00062C (Supplements CCN 125817)*
Nozzle Design Pressures and Temperatures (UFP-62A)	24590-PTF-M6X-UFP-00317 24590-PTF-M6X-UFP-00094 24590-PTF-M6X-UFP-00122 24590-PTF-M6X-UFP-00428	0 0 0 0	*MS Line List for 24590-PTF-M6-UFP-00004001* *MS Line List for 24590-PTF-M6-UFP-00005007* *MS Line List for 24590-PTF-M6-UFP-00006007* *MS Line List for 24590-PTF-M6-UFP-00015001*
Nozzle Design Pressures and Temperatures (UFP-62B)	24590-PTF-M6X-UFP-00320 24590-PTF-M6X-UFP-00094 24590-PTF-M6X-UFP-00122 24590-PTF-M6X-UFP-00428	0 0 0 0	*MS Line List for 24590-PTF-M6-UFP-00004002* *MS Line List for 24590-PTF-M6-UFP-00005007* *MS Line List for 24590-PTF-M6-UFP-00006007* *MS Line List for 24590-PTF-M6-UFP-00015001*
Nozzle Design Pressures and Temperatures (UFP-62C)	24590-PTF-M6X-UFP-00323 24590-PTF-M6X-UFP-00199 24590-PTF-M6X-UFP-00362 24590-PTF-M6X-PWD-00113	0 0 0 2	*MS Line List for 24590-PTF-M6-UFP-00004003* *MS Line List for 24590-PTF-M6-UFP-00009006* *MS Line List for 24590-PTF-M6-UFP-00011005* *MS Line List for 24590-PTF-M6-PWD-00046*

R11249139

MECHANICAL SYSTEMS DATA SHEET: VESSEL

PLANT ITEM No.
24590-PTF-MV-UFP-VSL-00062B

Project:	***RPP-WTP***	P&ID:	***24590-PTF-M6-UFP-00004002, 24590-PTF-M6-UFP-00005007, 24590-PTF-M6-UFP-00006007, 24590-PTF-M6-UFP-00015001***
Project No:	***24590***	Calculations:	***Attachment 1 (Page 1 of 2)***
Project Site:	***Hanford***	Vessel Drawing	***24590-PTF-MV-UFP-00006***
Description:	***Ultrafilter Permeate Collection Vessel***	Reports/Other Documents	***Attachment 1 (Page 1 of 2)***

ISSUED BY RPP-WTP PDC

Reference Data

Charge Vessels (Tag Numbers)	***UFP-VSL-00035, UFP-VSL-00036, UFP-VSL-00075, UFP-VSL-00037, UFP-VSL-00051, UFP-VSL-00083***
Pulsejet Mixers / Agitators (Tag Numbers)	***UFP-PJM-00039, UFP-PJM-00040, UFP-PJM-00041, UFP-PJM-00042, UFP-PJM-00043, UFP-PJM-00051***
RFDs/Pumps (Tag Numbers)	***UFP-RFD-00031, UFP-RFD-00032, UFP-RFD-00033, UFP-RFD-00034, UFP-RFD-00039, UFP-RFD-00047***

Design Data

Quality Level	***Q (Note 11)***	Fabrication Specs	***24590-WTP-3PS-MV00-T0001***		
Seismic Category	***SC-I***	Design Code	***ASME Section VIII, Div 1***		
Service/Contents	***Radioactive Liquid***	Code Stamp	***Yes***		
Design Specific Gravity	***1.5***	NB Registration	***Yes***		
Maximum Operating Volume gal	***30,058***	Weights (lbs)	Empty	Operating	Test
Total Volume gal	***34,700***	Estimated	***103,000***	***512,285***	***401,100***
Environmental Qualification	***See EQ sections***	11			

Inside Diameter	inch	***180***			Wind Design	***Not Required***	
Length/Height (TL-TL)	inch	***255***			Snow Design	***Not Required***	
		Vessel Operating	Vessel Design	Coil/Jacket Design	Seismic Design	***24590-WTP-3PS-MV00-T0002 24590-WTP-3PS-SS90-T0001***	
Internal Pressure	psig	***ATM***	***15***	***N/A***			
External Pressure	psig	***1.5***	***2.0 (Note 14)***	***N/A***	Postweld Heat Treat	***Not Required***	
Temperature	°F	***133***	***230***	***N/A***	Corrosion Allowance	Inch	***0.04***
Min. Design Metal Temp.	°F	***40***					

Materials of Construction

Component	Material	Minimum Thickness / Size	Containment
Top Head	***SA 240 316 (Note 1)***	***See Drawing***	***Auxiliary (Note 6)***
Shell	***SA 240 316 (Note 1)***	***See Drawing***	***Primary (Note 6)***
Bottom Head	***SA 240 316 (Note 1)***	***See Drawing***	***Primary (Note 6)***
Support	***SA 240 304 (Note 1)***	***See Drawing***	***N/A***
Jacket/Coils/Half-Pipe Jacket	***N/A***	***N/A***	***N/A***
Internals	***SA 240 316 (Note 1)***	***See Drawing***	***Thermowells Primary***
Pipe Nozzles	***SA 312 TP316 (Note 1)***	***See Drawing***	***Primary (Note 6)***
Forgings/ Bar stock	***SA 182 F316 (Note 1)***	***See Drawing***	***N/A***
Wash Ring Pipe	***SA 312 TP316 (Note 1)***	***See Drawing***	***N/A***
Bolting/ Gaskets	***N/A***	***N/A***	***N/A***

Miscellaneous Data

Orientation	***Vertical***	Support Type	***Skirt***
Insulation Function	***Not Applicable***	Insulation Material	***Not Applicable***
Insulation Thickness (inch)	***Not Applicable***	Internal Finish	***Note 3***
		External Finish	***Note 3***

Notes/Remarks

11

Note 1: ***Maximum 0.030% carbon.***

Note 2: ***Deleted.***

Note 3: ***Welds de-scaled as laid.***

Note 4: ***Vessel volumes are approximate and do not account for the manufacturing tolerances, nozzles, and displacement of internals.***

Note 5: ***This vessel is in a Black Cell.***

Note 6: ***All welds forming part of the primary and auxiliary containment including nozzle attachment welds shall be subjected to 100% volumetric examination.***

Note 7: ***Contents of this document are Dangerous Waste Permit affecting.***

Note 8: ***Deleted as per Report No. 24590-WTP-RPT-M-04-0007 Rev. 0 dated Nov. 01, 2004.***

Note 9: ***Deleted***

Note 10: ***Deleted***

Note 11: ***Vessel to be designed, fabricated, tested to Q, L-1 requirements defined in 24590-WTP-3PS-MV00-T0001.***

Note 12: ***Deleted***

Note 13: ***If any Sections contains a revision triangle next to the Section heading, this means the entire section has been revised or is new - the entire section must be reviewed for changes/additions.***

Note 14: ***External design pressure of 2.0 psig is based on a normal operating pressure of -35 in WG (1.26 psig) with an additional margin (see 24590-PTF-M6C-PVP-00017).***

Note 15: ***Revised Design Data, revised P&IDs, revised Calculation, added Reports/Other Documents change to parent vessel cyclic data, change to hydrodynamic loads for normal operations, revised single overblow loads, added MOB loads, change to parent vessel cyclic data, change to PJM cyclic data, change to CV cyclic data, added nozzle loads, added Equipment Qualification Data Sheet and Notes, added DOE Radioactive Material Disclaimer, added E&NS table and signature, revised Note 9,added Notes 11 through 15, added Attachment 1 for BNI use only.***

Note 16: ***Revised as follows: operating and design temperatures and the Hydrodynamic Loading section including overblow.***

Equipment Cyclic Data Sheet - Parent Vessel

Component Plant Item Number:	*PTF-MV-UFP-VSL-00062B*
Component Description	*Ultrafilter Permeate Collection Vessel (Parent Vessel)*

The information below is provisional and envelopes operational duty for fatigue assessment. It is not to be used as operational data.

Materials of Construction	*ASME SA 240 316 with max. Carbon of 0.030%*
Design Life	*40 Years*
Component Function and Life Cycle Description 11	*This vessel collects permeate from the Ultrafiltration tube units. The permeate is transferred from this vessel to the Cesium Ion Exchange Process System, vessel CXP-VSL-00004, for further processing. The permeate is also sampled to check for solids in this vessel. The operating cycle for this vessel, filled then emptied, is approximately 24 hours.*

Load Type		Min	Max	Number of Cycles	Comment
Design Pressure	psig	*-2.0*	*15*	*10*	*Nominal assumption for testing*
Operating Pressure	psig	*-1.5* *0* 11	*0* *2.8*	*7.0E6* *40*	*Normal Operations* *Loss of Power*
Operating Temp	°F	*59*	*133*	*13300*	
Contents Specific Gravity		*1.0*	*1.5*	*13300*	*Assume vessel empty for min value*
Contents Level	inch	*27*	*288*	*13300*	
Localized Features					
Nozzles		*Within 9 °F of operating temperature range.*		*As above*	

Notes

- ***Cycle increase:** Increase the numbers of operational cycles given above by 10% to account for commissioning duty unless otherwise noted.*
- ***DELETED***

Equipment Cyclic Data Sheet - PJMs

Component Plant Item Number:	*UFP-PJM-00039, UFP-PJM-00040, UFP-PJM-00041, UFP-PJM-00042, UFP-PJM-00043, UFP-PJM-00051*
Component Description	***Pulse Jet Mixers***

The information below is provisional and envelopes operational duty for fatigue assessment. It is not to be used as operational data.

Materials of Construction	***ASME SA 240 316 with max. Carbon of 0.030%***
Design Life	***40 Years***
Component Function and Life Cycle Description	***These pulse jet mixers (PJMs) are cyclically loaded using vacuum to fully fill the PJM with process liquid and compressed air to fully empty the PJM. The PJMs are contained within a parent vessel with varying liquid level. They shall be designed to cycle between the maximum design pressure and the minimum design pressure plus the external static head imposed by the parent vessel. The PJM supports shall be designed to cycle between fully buoyant (PJM empty and parent vessel full) and fully loaded (PJM full and parent vessel empty) states. Thrust load shall be applied only to the fully buoyant state. Assume the parent vessel is full for 50% of the number of PJM cycles.***

Load Type		Min	Max	Number of Cycles	Comment
Design Pressure	psig	*FV*	*80* 11	*100*	***Nominal assumption for testing, not combined with other load cases***
Operating Pressure	psig	*FV*	*25* 11	*1.9E7* 11	
Operating Temperature	°F	*59*	*133*	*13300*	***Same as Parent Vessel***
Contents Specific Gravity		*1.00*	*1.5*	*13300* 11	***Assume for buoyancy PJM is empty***
Contents Level	inch	*Empty*	*Flooded*	*1.9E7* 11	
Thrust 11	lbf	*-394*	*394*	*1.9E7*	
Localized Features					
Nozzles		***Within 9°F of operating temperature range.***		***As above***	
Supports		***Buoyant***	***Loaded***	*1.9E7* 11	

Notes

- ***Cycle increase: Increase the numbers of operational cycles given above by 10% to account for commissioning duty unless otherwise noted.***
- ***DELETED***

Equipment Cyclic Data Sheet - Charge Vessels

Component Plant Item Number:	*PTF-MV-UFP-VSL-00035, PTF-MV-UFP-VSL-00036, PTF-MV-UFP-VSL-00075, PTF-MV-UFP-VSL-00037, PTF-MV-UFP-VSL-00051, PTF-MV-UFP-00083*
Component Description	*Charge Vessels for the following RFDs UFP-RFD-00031, UFP-RFD-00032, UFP-RFD-00033, UFP-RFD-00034, UFP-RFD-00039 , UFP-RFD-00047*

The information below is provisional and envelopes operational duty for fatigue assessment. It is not to be used as operational data.

Materials of Construction	*ASME SA 240 316 with max. Carbon of 0.030%*
Design Life	*40 Years*
Component Function and Life Cycle Description	*These charge vessels are cyclically loaded using vacuum to fully fill the charge vessel with process liquid and compressed air to fully empty the charge vessel. The charge vessels are contained within a parent vessel with varying liquid level. They shall be designed to cycle between the maximum design pressure and the minimum design pressure plus the external static head imposed by the parent vessel. The charge vessel supports shall be designed to cycle between fully buoyant (charge vessel empty and parent vessel full) and fully loaded (charge vessel full and parent vessel empty).*

Load Type		Min	Max	Number of Cycles	Comment
Design Pressure	psig	*FV*	*135* 11	*100*	*Max value based on operating plus a margin - not to be used concurrent with any other occasional load case.*
Operating Pressure	psig	*FV*	*80*	*4.1E6* 11	*Maximum value for all charge vessels 24590-PTF-MVC-10-00003*
Operating Temperature	°F	*59*	*133*	*13300*	*Same as parent Vessel*
Contents Specific Gravity		*1.00*	*1.5*	*13300* 11	*For Buoyancy assume CV is empty*
Contents Level	inch	*Empty*	*Flooded*	*4.1E6* 11	*Maximum value for all charge vessels 24590-PTF-MVC-10-00003*
Localized Features					
Nozzles		*Within 9°F of operating temperature range.*		*As above*	
Supports		*Buoyant*	*Loaded*	*4.1E6* 11	*Maximum value for all charge vessels 24590-PTF-MVC-10-00003*

Notes

- ***Cycle increase: Increase the numbers of operational cycles given above by 10% to account for commissioning duty unless otherwise noted.***
- ***DELETED***

Hydrodynamic Loads Due to PJM Operations 11

Normal operation imposes a cyclical load as described in the following table:

6 PJM Class	Radial Direction		Axial Direction		Number of Cycles
	Peak Positive (psi)	Peak Negative (psi)	Peak Positive (psi)	Peak Negative (psi)	
Targets above 12" from vessel bottom	0.22	-0.02	0.4	-0.01	1.9E7
Targets 6" to 12" from vessel bottom	0.29	-0.09	0.48	-0.74	

The hydrodynamic pressure applies across the projected area of the component. Positive hydrodynamic forces act in the radial, outward direction and the vertical, upward direction. Seller shall apply the radial load simultaneously in the radial direction and normal to the radial direction in the horizontal plane.

Design Considerations for Loads Induced by Pulse Jet Mixers (PJMs)

Pulse Jet Mixers (PJMs) are designed to mix the vessel contents using a liquid jet discharge. PJMs are driven by compressed air. The mixing is required to enhance heat transfer, to break up hydrogen-containing particles, and to homogenize the solution. Normally, the PJMs are operated simultaneously within the parent vessel.

The PJMs operate in the following three cycles: Suction, Drive and Vent. During the suction cycle a vacuum is created in the PJM headspace and the level within the PJM rises to fill the PJM. During the drive cycle the PJM is pressurized and liquid is discharged. During the vent cycle, the pressure in the headspace approaches atmospheric and the level within the PJM is allowed to reach equilibrium.

Vessel components shall be designed to withstand loading induced by PJM operations as described herein.

Normal Operations: Liquid flows around internal structures within the parent vessel producing hydrodynamic loads such as drag and vortex shedding.

To mitigate the dynamic effects, the following pipe sizes dipped internal to the vessel are required to have a minimum first natural frequency that is double the vortex shedding frequency:

Nominal Pipe Size	Minimum First Natural Frequency
1 inch (<12" from bottom head)	14 Hz*
1 inch (>12" from bottom head)	12 Hz*
2 inch	8.0 Hz*
3 inch	5.0 Hz**

* See 24590-WTP-MVC-50-00001
** By extrapolation from 1 inch and 2 inch

Overblow Condition: Occasionally the drive cycle lasts too long and compressed air is discharged from the PJM. Overblows can also occur during system calibration. One or multiple PJMs may overblow at any time. These conditions induce acoustic and bubble rise loads on structures.

All internal components shall be designed for the combination of normal operational hydrodynamic loads and overblow loads. Single overblows (SOB) are assumed to act concurrently with the seismic event, however multiple overblows (MOB) are not assumed to act concurrently with the seismic event. Figure 1 (below) provides the acoustic load intensity that encompasses both SOB and MOB.

PJM Overblow Loads

Discussion: *During normal operation, pulse jet mixers (PJMs) mix the fluid by pulling in (suction) and pushing out (drive) fluid. During an upset condition, designated as an 'overblow', air is discharged following the drive cycle of one or more PJMs. The load consists of acoustic pressure (2Hz to 200Hz) developed in the first 200ms of the event and a load due to the bubble rising through the fluid.*

The acoustic load and the bubble load are design loads as defined by ASME B&PVC, Section 8, Division 1, UG-22, applied statically. The acoustic load is not added to the bubble rise load because they occur at different times during the overblow event.

Acoustic Load

- ***The acoustic design load in Figure 1 is applied to the visible (as viewed from the overblow origin) surface of cylindrical targets such as pipes, charge vessels, and PJMs. The load is applied in the direction normal to the principal axis of the target as illustrated in Figure 2. Note: The intended net effective load on the target is equal to the projected (i.e. cross-sectional) area of the object times the acoustic design load (psi) indicated in Figure 1.***
- ***Each target is considered independent of the surrounding targets: e.g. the surrounding targets do not impede the acoustic wave by casting a shadow, as illustrated in Figure 2.***
- ***The load is not applied to small supports such as gussets, brackets, tabs, clamps, and bolts because they are rigid and the pressure drop across the target is negligible.***
- ***When the vessel contains multiple PJMs, the load from one PJM is independent of the load from other PJMs. The loads are not additive for multiple overblows.***
- ***No internal components shall be placed within 5 PJM nozzle diameters (5 * 4 in = 20 in) of a spherical zone centered at any overblowing PJM nozzle.***

Figure 1: Acoustic Design Load

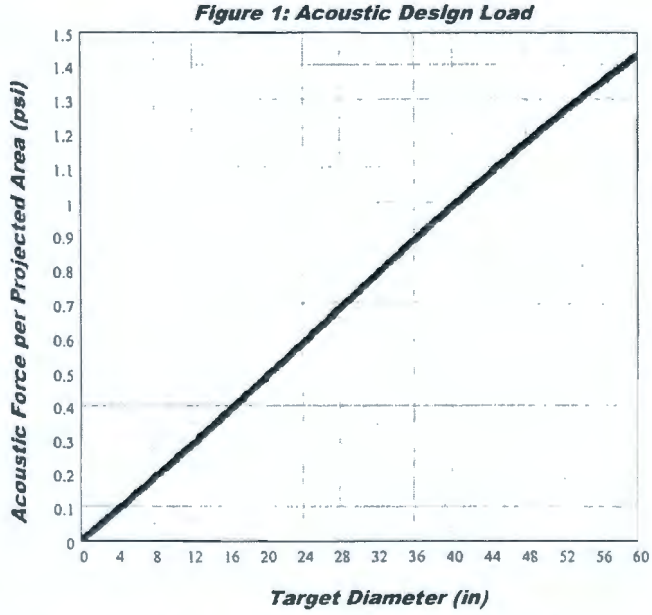

Figure 2: Load Application

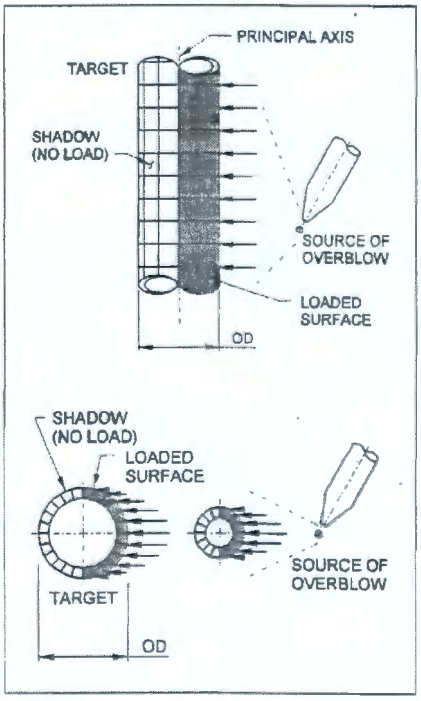

The following data is required to determine the load:

- ***Target Diameter***
- ***Target Principal Axis***
- ***Overblow Source Coordinates***

Number of Acoustic Cycles

1000 events X 40 cycles/event for a total of 40,000 acoustic cycles.

Bubble Rise Load

A vertical force per projected area of 1.7 psi is applied to the surfaces in the 36-inch diameter cylindrical zone centered at the overblowing PJM(s). The bubble can be at any elevation above the overblowing PJM and only affects one zone (36-inch diameter region) at a time. When there are multiple PJMs in a vessel (MOB), each PJM has it's own bubble. To simplify analysis the bubble can be applied in a continuous cylindrical zone above each PJM top head.

Number Bubble Rise Cycles

1000 events X 1 cycle/event

Nozzle Loads

Nozzle	Design Pressure (PSIG) (Note E)	Design Temp (°F) (Note E)	Size	Load Type	Loads - lbs			Moments - ft-lbs		
					Fx	Fy	Fz	Mx	My	Mz
N05	15	138	2"OD	Weight	50	60	50	75	75	75
				Seismic	106	70	106	158	237	237
				Thermal	30	20	30	40	70	70
N06	15 △11	230 △11	6"	Weight	N06 is parent nozzle, nozzle loads are applied via N06A, N06B, N06C					
				Seismic						
				Thermal						
N06A (Note C)	150	140	1"	Weight	15	20	15	20	20	20
				Seismic	30	20	30	47	55	55
				Thermal	10	10	10	10	20	20
N06B (Note C)	150	140	1"	Weight	15	20	15	20	20	20
				Seismic	30	20	30	47	55	55
				Thermal	10	10	10	10	20	20
N06C (Note C)	150	140	1"	Weight	15	20	15	20	20	20
				Seismic	30	20	30	47	55	55
				Thermal	10	10	10	10	20	20
N07	170	150	2"	Weight	50	97	50	75	75	75
				Seismic	106	70	106	390	237	237
				Thermal	30	20	30	40	70	78
N09	30	212	2"	Weight	50	77	50	75	75	75
				Seismic	106	70	106	247	237	237
				Thermal	30	62	30	60	70	99
N10	30	111	2"	Weight	50	94	50	75	75	75
				Seismic	106	70	106	363	237	237
				Thermal	30	58	30	40	70	75
N11	15	160	2"	Weight	50	90	50	75	75	75
				Seismic	106	70	106	199	237	237
				Thermal	30	20	30	40	70	70
N12	124	140	2"OD	Weight	50	60	50	75	75	75
				Seismic	106	70	106	158	237	237
				Thermal	30	20	30	40	70	70
N13	80	111	2"OD	Weight	50	60	50	75	75	75
				Seismic	106	70	106	158	237	237
				Thermal	30	20	30	40	70	70
N14	80	111	2"	Weight	50	60	50	75	75	75
				Seismic	106	70	106	158	237	237
				Thermal	30	20	30	40	70	70
N16	124	140	2"	Weight	50	90	50	75	75	75
				Seismic	106	72	106	215	237	358
				Thermal	30	20	30	50	70	70
N17	150	185	2"	Weight	50	60	50	75	75	145
				Seismic	106	70	106	158	237	237
				Thermal	30	24	30	40	70	70
N18	124	140	2"	Weight	50	71	50	75	75	75
				Seismic	106	70	106	158	237	237
				Thermal	30	20	30	49	70	70

Nozzle	Design Pressure (PSIG) (Note E)	Design Temp (°F) (Note E)	Size	Load Type	Loads - lbs			Moments - ft-lbs		
					Fx	Fy	Fz	Mx	My	Mz
N19	124	140	2"	Weight	50	106	50	75	75	75
				Seismic	106	104	106	158	237	647
				Thermal	30	20	30	46	70	70
N20	124	140	2"	Weight	50	86	50	75	75	75
				Seismic	106	70	106	158	237	237
				Thermal	30	20	30	68	70	70
N21	124	140	2"	Weight	50	81	50	75	75	75
				Seismic	106	70	106	158	237	237
				Thermal	30	47	30	65	70	70
N22	15	185	6"	Weight	210	335	210	598	374	374
				Seismic	663	443	663	2423	3638	3638
				Thermal	180	160	240	640	1280	1622
N23	124	140	3"	Weight	52	189	52	119	75	75
				Seismic	162	136	162	792	701	701
				Thermal	50	42	60	120	240	267
N24	124	140	3"	Weight	52	198	52	119	75	75
				Seismic	162	147	162	468	701	701
				Thermal	50	54	60	185	240	240
N25	124	140	3"	Weight	52	146	52	119	75	75
				Seismic	162	108	162	468	701	701
				Thermal	97	333	60	120	240	368
N26	124	140	3"	Weight	52	182	52	119	75	75
				Seismic	162	130	162	468	701	701
				Thermal	50	58	60	189	240	240
N28	75	185	4"	Weight	87	234	87	312	135	135
				Seismic	483	190	342	1263	1320	1527
				Thermal	82	70	100	264	450	450
N29	75	111	4"	Weight	87	238	87	283	135	294
				Seismic	364	183	362	1501	1384	1320
				Thermal	80	70	100	230	450	450
N30	75	185	4"	Weight	87	228	87	216	135	135
				Seismic	338	183	406	1835	1320	1320
				Thermal	134	70	100	230	450	450
N32	75	185	4"	Weight	87	270	87	216	135	387
				Seismic	312	194	416	1789	1467	1508
				Thermal	80	70	100	230	450	450
N34	134	175	2"	Weight	50	76	50	75	75	75
				Seismic	106	70	106	158	237	237
				Thermal	30	51	30	46	70	90
N35	134	175	2"	Weight	50	95	50	75	75	75
				Seismic	106	70	106	172	237	237
				Thermal	30	39	30	40	70	97
N36	134	175	2"	Weight	50	114	50	75	75	75
				Seismic	106	82	106	255	237	275
				Thermal	30	38	30	75	70	94

BECHTEL	**MECHANICAL SYSTEMS DATA SHEET: VESSEL**	**PLANT ITEM No.** ***24590-PTF-MV-UFP-VSL-00062B***

Nozzle	Design Pressure (PSIG) (Note E)	Design Temp (°F) (Note E)	Size	Load Type	Loads - lbs			Moments - ft-lbs		
					Fx	Fy	Fz	Mx	My	Mz
N37	15	120	6"	Weight	210	335	210	598	374	1018
				Seismic	663	443	1025	2423	6464	3638
				Thermal	180	160	281	640	1280	1280
N38 △11	169	120	2"	Weight	20	315	10	30	5	50
				Seismic	65	120	65	205	205	260
				Thermal	10	10	5	5	5	20
N39	15 △11	230 △11	24"	Weight	Manway - No Loads Applied					
				Seismic						
				Thermal						
N40	125	120	3"	Weight	52	154	52	119	75	238
				Seismic	162	125	162	468	701	731
				Thermal	50	47	86	271	240	240
N41	124	140	2"	Weight	50	85	50	75	75	75
				Seismic	106	70	106	158	237	237
				Thermal	30	21	30	43	70	70
N44	75	111	4"	Weight	87	220	87	533	135	135
				Seismic	592	359	328	1514	1320	1511
				Thermal	80	70	100	230	450	450
N45	124	140	3"	Weight	52	159	52	119	75	75
				Seismic	162	116	162	468	701	701
				Thermal	68	270	60	225	240	341
N46	15	160	2"	Weight	50	60	50	75	75	75
				Seismic	106	70	106	158	237	237
				Thermal	30	52	30	40	70	70

Notes for Nozzle Loads

A. Direction of load application is per diagrams in 24590-WTP-3PS-MV00-T0001 Appendix A.

B. For nozzles in head: x = North/South, y = Vertical, and z = East/West - Vessel 0° defined as north.

C. Values provided at plate on top of parent nozzle.

D. Nozzle loads shown are to be used in place of those specified in 24590-WTP-3PS-MV00-T0001 - do not apply thermal reduction factors.

E. Nozzle Pressures and Temperatures to be used to qualify the nozzles only.

F. All Pretreatment RGM Seismic Piping Nozzles loads from Plant Design shall have a 1.75 load factor applied to address coupling effects between the flexible vessels and piping in accordance with the Seismic Classification and Evaluation for the Pretreatment Facility Piping and Vessels, 24590-WTP-RPT-ENG-09-040. △11

EQUIPMENT QUALIFICATION DATASHEET (EQD)

Equipment Identification		
Full Component Tag Number or BNI Stock Code Number	24590-PTF-MV-UFP-VSL-00062B	Safety Classification ☒ SC ☐ SS ☐ APC-PAM
Equipment Datasheet Number	24590-PTF-MVD-UFP-00006	
Description	Ultrafilter Permeate Collection Vessel	Seismic Category ☒ SC-I ☐ SC-II ☐ SC-III ☐ SC-IV ☐ SC-III Seismic Interaction only
Location (Facility / Building and Room No.)	Pretreatment Building; located in Room P-0106, Elev. 0'-00", column lines K.5/11.5	
Safety Function(s)	UFP-VSL-00062B (parent vessel) is considered a high active process vessel credited to prevent spills of large quantities of high activity process liquid and provide primary confinement for radioactive releases. Reference: 24590-WTP-PSAR-ESH-01-002-02, Table 4A-1, Preliminary Documented Safety Analysis to Support Construction Authorization; PT Facility Specific Information.	
Equipment Safety Function Type	☒ Passive Mechanical ☐ Active Mechanical	☐ Electrical
Seismic Safety Function ☒ Yes ☐ No	Seismic Operability Requirements ☒ During Seismic Event ☒ After Seismic Event	☐ None

Equipment Environmental Qualification (EEQ)

(Parameter values stated in this section do not include process conditions or operation induced conditions)

Classification of Environment ☒ Mild ☐ Harsh

Qualified Life (years) ☒ 40 ☐ Other

Parameter Type/Units	Parameter Value	Parameter Duration (number)	Duration Units	WTP Source Document Number
Normal Ambients				
High Temperature (°F)	113	Note a	Years	24590-PTF-U0D-W16T-00001, E-Note 1
Low Temperature (°F)	59	Note b	N/A	24590-PTF-U0D-W16T-00001, E-Note 1
High Relative Humidity (%RH)	90	Note c	N/A	24590-PTF-U0D-W16T-00001, E-Note 1
Low Relative Humidity (%RH)	5	Note c	N/A	24590-PTF-U0D-W16T-00001, E-Note 1
High Pressure (in.-w.g.)	0 (E-Note 2)	Note d	N/A	24590-PTF-U0D-W16T-00001, E-Note 1
Low Pressure (in.-w.g.)	(-) 1.4 (E-Note 2)	Note d	N/A	24590-PTF-U0D-W16T-00001, E-Note 1
Radiation Dose Rate (mRad/hr)	255000 (E-Note 4)	40 (E-Note 7)	Years (Note e-1)	24590-PTF-U0D-W16T-00001, E-Note 1
Plant/Process Induced Vibration	☐ Yes ☒ No			

Equipment Environmental Qualification (EEQ) *(continued)*

Parameter Type/Units	Parameter Value	Parameter Duration (number)	Duration Units	WTP Source Document Number
Normal Ambients				
Additional Normal Ambient Information:	N/A			
Abnormal Ambients				
High Temperature (°F)	128	8	hours / year	24590-PTF-U0D-W16T-00001, E-Note 1
Low Temperature (°F)	40	Note b	N/A	24590-PTF-U0D-W16T-00001, E-Note 1
High Relative Humidity (%RH)	100c	Note c	N/A	24590-PTF-U0D-W16T-00001, E-Note 1
Low Relative Humidity (%RH)	6	Note c	N/A	24590-PTF-U0D-W16T-00001, E-Note 1
High Pressure (in.-w.g)	4 (E-Note 2)	Note d	N/A	24590-PTF-U0D-W16T-00001, E-Note 1
Low Pressure (in.-w.g)	(-) 7.3 (E-Note 2)	Note d	N/A	24590-PTF-U0D-W16T-00001, E-Note 1
Radiation Dose Rate (mR/hr)	255000 (E-Note 4)	0 (E-Note 7)	Years (Note e-1)	24590-PTF-U0D-W16T-00001, E-Note 1
Exposure to Wet Sprinkler System	☐ Yes ☒ No	N/A	hours	24590-PTF-U0D-W16T-00001, E-Note 1
Additional Abnormal Ambient Information	N/A			
Design Basis Events (DBE) Ambients				
High Temperature (°F)	138	1000	hours	24590-PTF-U0D-W16T-00001, E-Note 1
Low Temperature (°F)	40	Note b	N/A	24590-PTF-U0D-W16T-00001, E-Note 1
High Relative Humidity (%RH)	100c	40	hours	24590-PTF-U0D-W16T-00001, E-Note 1
Low Relative Humidity (%RH)	4	1000	hours	24590-PTF-U0D-W16T-00001, E-Note 1
High Pressure (in.-w.g)	4 (E-Note 2)	8	hours	24590-PTF-U0D-W16T-00001, E-Note 1
Low Pressure (in.-w.g)	(-) 7.3 (E-Note 2)	1000	hours	24590-PTF-U0D-W16T-00001, E-Note 1
Radiation Dose Rate (mR/hr)	255000 (E-Note 4)	0 (E-Note 7)	hours	24590-PTF-U0D-W16T-00001, E-Note 1
Submergence	☐ Yes ☒ No	N/A	hours	24590-PTF-U0D-W16T-00001, E-Note 5
Chemical/Spray Exposure	☒ Yes ☐ No	12.5	hours	24590-PTF-U0D-W16T-00001, E-Note 1
Additional DBE Information	N/A			

DBE Chemical Exposure Details

DBE Chemical Exposure Details	
DBE Chemical Types / Concentrations	Nitric Acid (RDP09), 87 °F, 2.5 pH Process Rad Condensate Sodium Hydroxide (FEP01), 103 °F, 14.5 pH Sodium Hydroxide (FEP08a), 104 °F, 11.5 pH Sodium Hydroxide (FEP12a), 104 °F, 11.5 pH Sodium Hydroxide (FEP19), 121 °F, 15.5 pH Sodium Hydroxide (FRP01), 121 °F, 14.5 pH Sodium Hydroxide (FRP02), 110 °F, 14.5 pH Sodium Hydroxide (FRP13), 110 °F, 14.5 pH Sodium Hydroxide (FRP14), 191 °F, 15.5 pH Sodium Hydroxide (HLP11), 113 °F, 14.5 pH Sodium Hydroxide (HLP12), 113 °F, 15.5 pH Sodium Hydroxide (HLP13), 113 °F, 15.5 pH Sodium Hydroxide (PWD01), 106 °F, 14 pH Sodium Hydroxide (TCP05), 120 °F, 15.5 pH Sodium Hydroxide (UFP04), 77 °F, 15.5 pH Sodium Hydroxide (UFP33), 84 °F, 14.5 pH Sodium Hydroxide (2M) Sodium Permanganate (1M) Strontium Nitrate (1M) Water

Electrical Interfaces Supporting the Safety Function	
Power Supply Voltage (VAC, VDC)	N/A
Power Supply Frequency (Hz)	N/A
Power Connection Method	N/A
I/O Signals to/from Equipment	N/A
I/O Connection Method	N/A

Mechanical Interfaces	
Mounting Configuration (orientation)	Vertically Mounted, Skirt
Mounting Method (bolts, welds, etc.)	Welded skirt to ring beam welded to embedment plates. Embedment plate details per 24590-PTF-DD-S13T-00039, 24590-PTF-DD-S13T-00036, 24590-PTF-DD-S13T-00043, and 24590-PTF-DD-S13T-00045
Auxiliary Devices	UFP-VSL-00035, UFP-VSL-00036, UFP-VSL-00075, UFP-VSL-00037, UFP-VSL-00051, UFP-VSL-00083, UFP-PJM-00039, UFP-PJM-00040, UFP-PJM-00041, UFP-PJM-00042, UFP-PJM-00043, UFP-PJM-00051,UFP-RFD-00031, UFP-RFD-00032, UFP-RFD-00033, UFP-RFD-00034, UFP-RFD-00039, UFP-RFD-00047. All auxiliary devices are located internal to the parent vessel

EQUIPMENT QUALIFICATION DATASHEET (EQD)

Equipment Seismic Qualification (ESQ)				
Parameter	**Title**	**Reference/Document Number**	**Version / Revision**	**Remarks**
WTP Seismic Design Specification	Engineering Specification for Seismic Qualification of Seismic Category I/II Equipment and Tanks Engineering Specification for Seismic Qualification Criteria for Pressure Vessels	24590-WTP-3PS-SS90-T0001 24590-WTP-3PS-MV00-T0002	2 3	N/A
Specified Seismic Load Parameters	Seismic Analysis of Pretreatment Building - WSGM In-Structure Response Spectra (ISRS)	24590-PTF-S0C-S15T-00057	A	CCN: 203392; WSGM ISRS Curves: Figures 66, 67 and 68

Equipment Qualification Notes and Additional Information

Note a) For thermal aging, the high normal temperature shall be assumed to subsist for 40 years less the duration of the high abnormal temperature. For any lesser qualified life, the normal and abnormal condition durations shall be assigned proportionally. The abnormal temperature is stated to subsist for a certain number of hours per year. It shall be taken to subsist for this number of hours for each year of the qualified life.

Note b) The ability to provide the safety function at the low normal temperature, the low abnormal temperature or the low DBE temperature (whichever be the lowest) shall be established by test, analysis, or operating experience. The thermal aging at these respective low temperatures will be conservatively covered by the thermal aging per item a) above. Therefore, no duration is assigned for the low temperatures.

Note c) The ability to provide the safety function at the extremes of the normal and abnormal humidity conditions, taking into consideration the high and the low normal and high and low abnormal, shall be established by test, analysis, or operating experience. No duration is assigned for the normal and abnormal humidity conditions.

Note d) If the performance of the safety function of the equipment is affected by ambient pressure, the ability to provide the safety function at the extremes of the normal and abnormal pressure conditions, taking into consideration the high and the low normal and the high and low abnormal pressures, shall be established by test, analysis, or operating experience. No duration is assigned to the normal and abnormal pressure conditions.

Note e) (1) If the abnormal radiation dose rate is the same as the normal radiation dose rate, the normal radiation dose rate shall be assumed to subsist for 40 years, or any lesser qualified life, and the duration of the abnormal radiation dose rate is "0."

(2) If the abnormal radiation dose rate is higher than the normal radiation dose rate, the abnormal radiation dose rate shall be assumed to subsist for 40 years, or any lesser qualified life, and the duration of the normal radiation dose rate is "0."

Note f) The DBE conditions shall be taken to subsist for the stated number of hours following the qualified life of the equipment.

Note g) Spray due to fire sprinkler actuation shall be taken to occur once over the entire qualified life duration for a period of 2 hours, even if the qualified life is a period less than 40 years. If spray qualification is provided for DBE conditions (whether for water or chemical spray), then separate qualification for the fire sprinkler spray need not be provided.

Note h) The values stated in this EQD are the ambients and do not include the thermodynamic and radiation conditions imposed by the process fluids, self-heating, etc. The data pertaining to process fluid and service induced parameters are to be taken into account where significant, such as in thermal aging analyses. These data can be obtained from the equipment data sheets or the Equipment Specification.

Note i) Equipment that is to be installed in inaccessible locations must be qualified to a 40-year life without the need for maintenance or replacement.

E-Note 1: BNI (BUYER) shall perform Equipment Environmental Qualification in accordance with 24590-WTP-DC-ENG-06-001, Design Criteria for Equipment Seismic and Environmental Qualification.

E-Note 2: Where pressure is given in inches of water column (in-w.c.) in the source document, it is generally assumed that this is in reference to atmospheric pressure and is therefore equivalent to inches of water gage (in-w.g.)

E-Note 3: BNI (BUYER) shall perform Equipment Seismic Qualification in accordance with the listed parameters and the applicable specification requirements.

E-Note 4: Radiation Dose Rates are for determining shielding requirements only for the black cell and are not at the source (vessel). Since the vessel is all metallic and the source has no neutron components for material embrittlement, the dose rates are of no concern on the vessel or its subcomponents.

E-Note 5: Flood height is 2.08 ft above the floor, bottom of vessel is above this level therefore, no submergence evaluation is required.

E-Note 6: Environmental data shown are for the room only.

EQUIPMENT QUALIFICATION DATASHEET (EQD)

Equipment Qualification Notes and Additional Information
E-Note 7: Normal, Abnormal, and DBE dose rates are the same, therefore, abnormal & DBE doses do not add to total integrated dose based on normal dose rates over 40 years.

DOE Radioactive Materials Disclaimer:
Please note that source, special nuclear and byproduct materials, as defined in the Atomic Energy Act of 1954 (AEA), are regulated at the US Department of Energy (DOE) facilities exclusively by DOE acting pursuant to its AEA authority. DOE asserts, that pursuant to the AEA, it has sole and exclusive responsibility and authority to regulate source, special nuclear, and byproduct materials at DOE-owned nuclear facilities. Information contained herein on radionuclides is provided for process description purposes only.

Screening / Evaluation Required? If yes per 24590-WTP-GPP-SREG-002, E&NS signature required below	X	Yes		No

Approval

Rev	Description	Vessel Engineer	Checked	System Engineer	Reviewed/ MET	E&NS	Approved	Date
0	Issued For Purchase	HK	US/CS	PA	N/A	N/A	SK	10/10/02
1	Revised as Noted	HK	PA/CS	MA	JJ	N/A	MWH	08/18/03
2	Revised as Noted	HK	PA/CS	MA	JJ	N/A	MWH	09/11/03
3	Revised as Noted	HK	PA/CS	MA	JJ	N/A	MWH	12/10/03
4	Revised as Noted	H Khurana	P. Aviguetero C. Slater	M. Askar	J. Julyk	N/A	C. Morley for M. Hoffmann	02/05/04
5	Added hydrodynamic loads and other revisions as noted.	H Khurana	P. Aviguetero R. Tiwari	M. Askar	J. Julyk	N/A	M Hoffmann	09/08/04
6	Added note 9, deleted note 8. and changes as noted.	H Khurana	P. Avigue	M. Askar	J. Julyk	N/A	M Hoffmann	12/17/05
7	Over-blow cycles revised from 100 to 1000 , on page 3. Deleted note 9 on page 2 and revised as noted.	H Khurana	J. Olson R. P. Voria	A.Moretta	CS	N/A	J. Julyk	09/04/05
8	Revised per note 10 on page 2 and as noted	H Khurana	J. Polani P Aviguetero	M. Askar	C. Slater D. Adler	N/A	J. Julyk	10/28/05
9	Revised per Note 15. Supersedes 24590-PTF-MVD-UFP-P0006, Rev 2.	M Seed	S Jain	D Vo	D Adler	J Hinckley	J Julyk	05/11/09
10	Revised per Note 16 and as noted by revision triangles.	M Seed	D Harris	D Vo	D Adler	J Hinckley	J Julyk	06/17/10
11	Incorporated 24590-PTF-MVN-UFP-00047. Revised Equipment Qualification data to new form, Hydrodynamic Loads Due to PJM Operations, and as noted by revision triangles.	M Seed MA Seed	L Rodgers L Rodgers	R Zielinski for B Lindberg R Zielinski	D Adler	J Hinckley	J Julyk	12/22/10

ATTACHMENT 1: Page 1 of 2
REFERENCES for Data Sheets: 24590-PTF-MVD-UFP-00005, 00006, 00007, Rev 11 *(For BNI Use only)*
Vessel Tags: UFP-VSL-00062A/B/C

Data	Document #	Rev	Document Title/ Comments
Quality Level	24590-PTF-M6-UFP-00004001	0	*P&ID Ultrafiltration Permeate Collection System Vessels*
Seismic Category	24590-PTF-M6-UFP-00004001	0	*P&ID Ultrafiltration Permeate Collection System Vessels*
Design Specific Gravity	24590-WTP-RPT-ENG-07-007	0A 11	*Process Stream Properties* / Section 4.18
Max Operating Volume	24590-PTF-M6C-UFP-00005	D	*Vessel Sizing Calc for Ultrafiltration Permeate Vessels UFP-62A, 62B, 62C* / Section 8
Total Volume	24590-PTF-M6C-UFP-00005	D	*Vessel Sizing Calc for Ultrafiltration Permeate Vessels UFP-62A, 62B, 62C* / Section 7.1.20
Inside Diameter	24590-PTF-M6C-UFP-00005	D	*Vessel Sizing Calc for Ultrafiltration Permeate Vessels UFP-62A, 62B, 62C* / Section 8
Length TL-TL	24590-PTF-M6C-UFP-00005	D	*Vessel Sizing Calc for Ultrafiltration Permeate Vessels UFP-62A, 62B, 62C* / Ssection 8
Operating Pressure (external)	24590-PTF-M6C-PVP-00017	A	*HADCRT Analysis of PTF PVP System at various Operating Scenarios / (see sheet 14 - the PVP scrubber inlet is controlled to 35 in-wg)* External pressure of 1.5 psig is based on a normal operating pressure of -35 in WG (1.26 psig) with an additional margin. (24590-PTF-M5-V17T-00021001 & 00021004 indicate the process flow diagrams)
Design Pressure (internal)	24590-WTP-DB-ENG-01-001	1P 11	*Basis of Design*
Design Pressure (external)	24590-PTF-M6C-PVP-00017	A	*HADCRT Analysis of PTF PVP System at various Operating Scenarios /* External design pressure of 2.0 psig is based on a normal operating pressure of -35 in WG (1.26 psig) with an additional margin
Operating Temp	24590-WTP-RPT-ENG-07-007	0A 11	*Process Stream Properties, Section 4.18*
Design Temp	24590-WTP-RPT-ENG-07-007	0A 11	*Process Stream Properties* / Section 4.18
Corrosion Allowance, Erosion allowance	24590-PTF-N1D-UFP-00008	5	*Corrosion Evaluation, UFP-VSL-00062A/B/C*
Materials of Construction	24590-PTF-N1D-UFP-00008	5	*Corrosion Evaluation, UFP-VSL-00062A/B/C* / identifies use of 316 SST with max carbon content of 0.03% - this is for material in contact with process fluids, the vessel support material is 304 SST
Cyclic Data (Vessel)	24590-PTF-MVC-10-00003	C	*PTF Vessel Cyclic Datasheet Inputs (24590-PTF-MVE-10-00008)* 11
Cyclic Data (PJM)	24590-PTF-MVC-10-00003	C	*PTF Vessel Cyclic Datasheet Inputs (24590-PTF-MVE-10-00012)* 11
Design Pressure (PJM)	24590-PTF-MVC-10-00003	C	*PTF Vessel Cyclic Datasheet Inputs (24590-PTF-MVE-10-00012)* 11
11 Operating Pressure (PJM)	24590-PTF-MVC-10-00003	C	*PTF Vessel Cyclic Datasheet Inputs*
Operating Temperature (PJM)			*Same as parent vessel*
11 PJM Thrust	24590-WTP-M6C-50-00011	A	*Pulse Jet Mixer Internal Pressures and Thrust*
11 Operating Pressure (Charge Vessels)	24590-PTF-MVC-10-00003	C	*PTF Vessel Cyclic Datasheet Inputs (24590-PTF-MVE-10-00011)*
11 Operating Temperature (Charge Vessels)			*Same as parent vessel*

ATTACHMENT 1: Page 2 of 2
REFERENCES for Data Sheets: 24590-PTF-MVD-UFP-00005, 00006, 00007, Rev 11 *(For BNI Use only)*
Vessel Tags: UFP-VSL-00062A/B/C

Data	Document #	Rev	Document Title/ Comments
Cyclic Data (Charge Vessels)	24590-PTF-MVC-10-00003	C	*PTF Vessel Cyclic Datasheet Inputs (24590-PTF-MVE-10-00011)* 11
Design Pressure (Charge Vessels)	24590-PTF-MVC-10-00003	C	*PTF Vessel Cyclic Datasheet Inputs (24590-PTF-MVE-10-00011)*
Hydrodynamic Loads 11	24590-WTP-MVC-50-00001	A	*Hydrodynamic Loads for Normal PJM Operation in Vessels with Newtonian Fluids* / Section 8 for 6 PJM
Single PJM Overblow Loads	24590-WTP-MVC-50-00008	C	*Hydrodynamic Loads for PJM Overblow in Vessels* / Figure 5, sheet 27
PJM Overblow Loads	24590-WTP-MVC-50-00011	B	*Pulse Jet Mixer Overblow Vessel Loads*
Single Overblow Cycles	24590-PTF-MVC-10-00003	C	*PTF Vessel Cyclic Datasheet Inputs* (24590-PTF-MVE-10-00004) 11
Multiple Overblow Cycles	24590-PTF-MVC-10-00003	C	*PTF Vessel Cyclic Datasheet Inputs* (24590-PTF-MVC-10-00004) 11
Nozzle Loads 11	CCN 126197 (UFP-62A) CCN 126198 (UFP-62B) CCN 125817 (UFP-62C) CCN 224448 (UFP-62A) CCN 224449 (UFP-62B) CCN 224450 (UFP-62C)	N/A N/A N/A N/A N/A N/A	*Nozzle Loads for UFP-VSL-00062A* *Nozzle Loads for UFP-VSL-00062B* *Nozzle Loads for UFP-VSL-00062C* *Supplemental Nozzle Design Loads for UFP-VSL-00062A (Supplements CCN 126197)* *Supplemental Nozzle Design Loads for UFP-VSL-00062B (Supplements CCN 126198)* *Supplemental Nozzle Design Loads for UFP-VSL-00062C (Supplements CCN 125817)*
Nozzle Design Pressures and Temperatures (UFP-62A)	24590-PTF-M6X-UFP-00317 24590-PTF-M6X-UFP-00094 24590-PTF-M6X-UFP-00122 24590-PTF-M6X-UFP-00428	0 0 0 0	*MS Line List for 24590-PTF-M6-UFP-00004001* *MS Line List for 24590-PTF-M6-UFP-00005007* *MS Line List for 24590-PTF-M6-UFP-00006007* *MS Line List for 24590-PTF-M6-UFP-00015001*
Nozzle Design Pressures and Temperatures (UFP-62B)	24590-PTF-M6X-UFP-00320 24590-PTF-M6X-UFP-00094 24590-PTF-M6X-UFP-00122 24590-PTF-M6X-UFP-00428	0 0 0 0	*MS Line List for 24590-PTF-M6-UFP-00004002* *MS Line List for 24590-PTF-M6-UFP-00005007* *MS Line List for 24590-PTF-M6-UFP-00006007* *MS Line List for 24590-PTF-M6-UFP-00015001*
Nozzle Design Pressures and Temperatures (UFP-62C)	24590-PTF-M6X-UFP-00323 24590-PTF-M6X-UFP-00199 24590-PTF-M6X-UFP-00362 24590-PTF-M6X-PWD-00113	0 0 0 2	*MS Line List for 24590-PTF-M6-UFP-00004003* *MS Line List for 24590-PTF-M6-UFP-00009006* *MS Line List for 24590-PTF-M6-UFP-00011005* *MS Line List for 24590-PTF-M6-PWD-00046*

R11249140

MECHANICAL SYSTEMS DATA SHEET: VESSEL

PLANT ITEM No.

24590-PTF-MV-UFP-VSL-00062C

Project:	***RPP-WTP***	P&ID:	***24590-PTF-M6-UFP-00004003, 24590-PTF-M6-UFP-00009006, 24590-PTF-M6-UFP-00011005, 24590-PTF-M6-PWD-00046***
Project No:	***24590***	Calculations:	***Attachment 1 (Page 1 of 2)***
Project Site:	***Hanford***	Vessel Drawing	***24590-PTF-MV-UFP-00007*** ISSUED BY
Description:	***Ultrafilter Permeate Collection Vessel***	Reports/Other Documents	***Attachment 1 (Page 1 of 2)*** RPP-WTP PDC

Reference Data

Charge Vessels (Tag Numbers)	***UFP-VSL-00023, UFP-VSL-00024, UFP-VSL-00025, UFP-VSL-00069, UFP-VSL-00070, UFP-VSL-00084***
Pulsejet Mixers / Agitators (Tag Numbers)	***UFP-PJM-00070, UFP-PJM-00073, UFP-PJM-00076, UFP-PJM-00077, UFP-PJM-00078, UFP-PJM-00107***
RFDs/Pumps (Tag Numbers)	***UFP-RFD-00042, UFP-RFD-00043, UFP-RFD-00044, UFP-RFD-00045, UFP-RFD-00046, UFP-RFD-00048***

Design Data

Quality Level	***Q (Note 11)***	Fabrication Specs	***24590-WTP-3PS-MV00-T0001***		
Seismic Category	***SC-I***	Design Code	***ASME Section VIII, Div 1***		
Service/Contents	***Radioactive Liquid***	Code Stamp	***Yes***		
Design Specific Gravity	***1.5***	NB Registration	***Yes***		
Maximum Operating Volume gal	***30,058***	Weights (lbs)	Empty	Operating	Test
Total Volume gal	***34,700***	Estimated	***103,000***	***512,285***	***401,100***
Environmental Qualification	***See EQ sections***	11			

Inside Diameter	inch	***180***			Wind Design	***Not Required***	
Length/Height (TL-TL)	inch	***255***			Snow Design	***Not Required***	
		Vessel Operating	Vessel Design	Coil/Jacket Design	Seismic Design	***24590-WTP-3PS-MV00-T0002 24590-WTP-3PS-SS90-T0001***	
Internal Pressure	psig	***ATM***	***15***	***N/A***			
External Pressure	psig	***1.5***	***2.0 (Note 14)***	***N/A***	Postweld Heat Treat	***Not Required***	
Temperature	°F	***133***	***230***	***N/A***	Corrosion Allowance	Inch	***0.04***
Min. Design Metal Temp.	°F	***40***					

Materials of Construction

Component	Material	Minimum Thickness / Size	Containment
Top Head	***SA 240 316 (Note 1)***	***See Drawing***	***Auxiliary (Note 6)***
Shell	***SA 240 316 (Note 1)***	***See Drawing***	***Primary (Note 6)***
Bottom Head	***SA 240 316 (Note 1)***	***See Drawing***	***Primary (Note 6)***
Support	***SA 240 304 (Note 1)***	***See Drawing***	***N/A***
Jacket/Coils/Half-Pipe Jacket	***N/A***	***N/A***	***N/A***
Internals	***SA 240 316 (Note 1)***	***See Drawing***	***Thermowells Primary***
Pipe Nozzles	***SA 312 TP316 (Note 1)***	***See Drawing***	***Primary (Note 6)***
Forgings/ Bar stock	***SA 182 F316 (Note 1)***	***See Drawing***	***N/A***
Wash Ring Pipe	***SA 312 TP316 (Note 1)***	***See Drawing***	***N/A***
Bolting/ Gaskets	***N/A***	***N/A***	***N/A***

Miscellaneous Data

Orientation	***Vertical***	Support Type	***Skirt***
Insulation Function	***Not Applicable***	Insulation Material	***Not Applicable***
Insulation Thickness (inch)	***Not Applicable***	Internal Finish	***Note 3***
		External Finish	***Note 3***

Notes/Remarks

11

Note 1: *Maximum 0.030% carbon.*

Note 2: *Deleted*

Note 3: *Welds de-scaled as laid.*

Note 4: *Vessel volumes are approximate and do not account for the manufacturing tolerances, nozzles, and displacement of internals.*

Note 5: *This vessel is in a Black Cell.*

Note 6: *All welds forming part of the primary and auxiliary containment including nozzle attachment welds shall be subjected to 100% volumetric examination.*

Note 7: *Contents of this document are Dangerous Waste Permit affecting.*

Note 8: *Deleted as per Report No. 24590-WTP-RPT-M-04-0007 Rev. 0 dated Nov. 01, 2004.*

Note 9: *Deleted*

Note 10: *Deleted*

Note 11: *Vessel to be designed, fabricated, tested to Q, L-1 requirements defined in 24590-WTP-3PS-MV00-T0001.*

Note 12: *Deleted*

Note 13: *If any Sections contains a revision triangle next to the Section heading, this means the entire section has been revised or is new - the entire section must be reviewed for changes/additions.*

Note 14: *External design pressure of 2.0 psig is based on a normal operating pressure of -35 in WG (1.26 psig) with an additional margin (see 24590-PTF-M6C-PVP-00017).*

Note 15: *Revised Design Data, revised P&IDs, revised Calculation, added Reports/Other Documents change to parent vessel cyclic data, change to hydrodynamic loads for normal operations, revised single overblow loads, added MOB loads, change to parent vessel cyclic data, change to PJM cyclic data, change to CV cyclic data, added nozzle loads, added Equipment Qualification Data Sheet and Notes, added DOE Radioactive Material Disclaimer, added E&NS table and signature, revised Note 9, added Notes 11 through 15, added Attachment 1 for BNI use only.*

Note 16: *Revised as follows: operating and design temperatures and the Hydrodynamic Loading section including overblow.*

Equipment Cyclic Data Sheet - Parent Vessel

Component Plant Item Number:	*PTF-MV-UFP-VSL-00062C*
Component Description	*Ultrafilter Permeate Collection Vessel (Parent Vessel)*

The information below is provisional and envelopes operational duty for fatigue assessment. It is not to be used as operational data.

Materials of Construction	*ASME SA 240 316 with max. Carbon of 0.030%*
Design Life	*40 Years*
Component Function and Life Cycle Description 11	*This vessel collects permeate from the Ultrafiltration tube units. The permeate is transferred from this vessel to the Cesium Ion Exchange Process System, vessel CXP-VSL-00004, for further processing. The permeate is also sampled to check for solids in this vessel. The operating cycle for this vessel, filled then emptied, is approximately 24 hours.*

Load Type		Min	Max	Number of Cycles	Comment
Design Pressure	psig	*-2.0*	*15*	*10*	*Nominal assumption for testing*
Operating Pressure	psig	*-1.5* *0* 11	*0* *2.8*	*7.0E6* *40*	*Normal Operations* *Loss of Power*
Operating Temp	°F	*59*	*133*	*13300*	
Contents Specific Gravity		*1.00*	*1.5*	*13300*	*assume vessel empty for min value*
Contents Level	inch	*27*	*288*	*13300*	
Localized Features					
Nozzles		*Within 9 °F of operating temperature range.*		*As above*	

Notes

- ***Cycle increase: Increase the numbers of operational cycles given above by 10% to account for commissioning duty unless otherwise noted.***
- ***DELETED***

Equipment Cyclic Data Sheet - PJMs

Component Plant Item Number:	*UFP-PJM-00070, UFP-PJM-00073, UFP-PJM-00076, UFP-PJM-00077, UFP-PJM-00078, UFP-PJM-00107*
Component Description	*Pulse Jet Mixers*

The information below is provisional and envelopes operational duty for fatigue assessment. It is not to be used as operational data.

Materials of Construction	*ASME SA 240 316 with max. Carbon of 0.030%*
Design Life	*40 Years*
Component Function and Life Cycle Description	*These pulse jet mixers (PJMs) are cyclically loaded using vacuum to fully fill the PJM with process liquid and compressed air to fully empty the PJM. The PJMs are contained within a parent vessel with varying liquid level. They shall be designed to cycle between the maximum design pressure and the minimum design pressure plus the external static head imposed by the parent vessel. The PJM supports shall be designed to cycle between fully buoyant (PJM empty and parent vessel full) and fully loaded (PJM full and parent vessel empty) states. Thrust load shall be applied only to the fully buoyant state. Assume the parent vessel is full for 50% of the number of PJM cycles.*

Load Type		Min	Max	Number of Cycles	Comment
Design Pressure	psig	*FV*	*80* 11	*100*	*Nominal assumption for testing, not combined with other load cases*
Operating Pressure	psig	*FV*	*25* 11	*1.9E7* 11	
Operating Temperature	°F	*59*	*133*	*13300*	*Same as Parent Vessel*
Contents Specific Gravity		*1.0*	*1.5*	*13300* 11	*Assume for buoyancy PJM is empty*
Contents Level	inch	*Empty*	*Flooded*	*1.9E7* 11	
Thrust 11	lbf	*-394*	*394*	*1.9E7*	
Localized Features					
Nozzles		*Within 9°F of operating temperature range.*		*As above*	
Supports		*Buoyant*	*Loaded*	*1.9E7* 11	

Notes

- *Cycle increase: Increase the numbers of operational cycles given above by 10% to account for commissioning duty unless otherwise noted.*
- *DELETED*

Equipment Cyclic Data Sheet - Charge Vessels

Component Plant Item Number:	*PTF-MV-UFP-VSL-00023, PTF-MV-UFP-VSL-00024, PTF-MV-UFP-VSL-00025, PTF-MV-UFP-VSL-00069, PTF-MV-UFP-VSL-00070, PTF-MV-UFP-00084* 11
Component Description	*Charge Vessels for the following RFDs UFP-RFD-00042, UFP-RFD-00043, UFP-RFD-00044, UFP-RFD-00045, UFP-RFD-00046 , UFP-RFD-00048*

The information below is provisional and envelopes operational duty for fatigue assessment. It is not to be used as operational data.

Materials of Construction	*ASME SA 240 316 with max. Carbon of 0.030%*
Design Life	*40 Years*
Component Function and Life Cycle Description	*These charge vessels are cyclically loaded using vacuum to fully fill the charge vessel with process liquid and compressed air to fully empty the charge vessel. The charge vessels are contained within a parent vessel with varying liquid level. They shall be designed to cycle between the maximum design pressure and the minimum design pressure plus the external static head imposed by the parent vessel. The charge vessel supports shall be designed to cycle between fully buoyant (charge vessel empty and parent vessel full) and fully loaded (charge vessel full and parent vessel empty).*

Load Type		Min	Max	Number of Cycles	Comment
Design Pressure	psig	*FV*	*135* 11	*100*	*Max value based on operating plus a margin - not to be used concurrent with any other occasional load case.*
Operating Pressure	psig	*FV*	*80*	*4.2E6* 11	*Maximum value for all charge vessels 24590-PTF-MVC-10-00003*
Operating Temperature	°F	*59*	*133*	*13300*	*Same as parent Vessel*
Contents Specific Gravity		*1.00*	*1.5*	*13300* 11	*For Buoyancy assume CV is empty*
Contents Level	inch	*Empty*	*Flooded*	*4.2E6* 11	*Maximum value for all charge vessels 24590-PTF-MVC-10-00003*
Localized Features					
Nozzles		*Within 9°F of operating temperature range.*		*As above*	
Supports		*Buoyant*	*Loaded*	*4.2E6* 11	*Maximum value for all charge vessels 24590-PTF-MVC-10-00003*

Notes

- ***Cycle increase: Increase the numbers of operational cycles given above by 10% to account for commissioning duty unless otherwise noted.***
- ***DELETED***

Hydrodynamic Loads Due to PJM Operations 11

Normal operation imposes a cyclical load as described in the following table:

6 PJM Class	Radial Direction		Axial Direction		Number of Cycles
	Peak Positive (psi)	Peak Negative (psi)	Peak Positive (psi)	Peak Negative (psi)	
Targets above 12" from vessel bottom	0.22	-0.02	0.4	-0.01	1.9E7
Targets 6" to 12" from vessel bottom	0.29	-0.09	0.48	-0.74	

The hydrodynamic pressure applies across the projected area of the component. Positive hydrodynamic forces act in the radial, outward direction and the vertical, upward direction. Seller shall apply the radial load simultaneously in the radial direction and normal to the radial direction in the horizontal plane.

Design Considerations for Loads Induced by Pulse Jet Mixers (PJMs)

Pulse Jet Mixers (PJMs) are designed to mix the vessel contents using a liquid jet discharge. PJMs are driven by compressed air. The mixing is required to enhance heat transfer, to break up hydrogen-containing particles, and to homogenize the solution. Normally, the PJMs are operated simultaneously within the parent vessel.

The PJMs operate in the following three cycles: Suction, Drive and Vent. During the suction cycle a vacuum is created in the PJM headspace and the level within the PJM rises to fill the PJM. During the drive cycle the PJM is pressurized and liquid is discharged. During the vent cycle, the pressure in the headspace approaches atmospheric and the level within the PJM is allowed to reach equilibrium.

Vessel components shall be designed to withstand loading induced by PJM operations as described herein.

Normal Operations: Liquid flows around internal structures within the parent vessel producing hydrodynamic loads such as drag and vortex shedding.

To mitigate the dynamic effects, the following pipe sizes dipped internal to the vessel are required to have a minimum first natural frequency that is double the vortex shedding frequency:

Nominal Pipe Size	Minimum First Natural Frequency
1 inch (<12" from bottom head)	14 Hz*
1 inch (>12" from bottom head)	12 Hz*
2 inch	8.0 Hz*
3 inch	5.0 Hz**

* See 24590-WTP-MVC-50-00001

** By extrapolation from 1 inch and 2 inch

Overblow Condition: Occasionally the drive cycle lasts too long and compressed air is discharged from the PJM. Overblows can also occur during system calibration. One or multiple PJMs may overblow at any time. These conditions induce acoustic and bubble rise loads on structures.

All internal components shall be designed for the combination of normal operational hydrodynamic loads and overblow loads. Single overblows (SOB) are assumed to act concurrently with the seismic event, however multiple overblows (MOB) are not assumed to act concurrently with the seismic event. Figure 1 (below) provides the acoustic load intensity that encompasses both SOB and MOB.

PJM Overblow Loads

Discussion: *During normal operation, pulse jet mixers (PJMs) mix the fluid by pulling in (suction) and pushing out (drive) fluid. During an upset condition, designated as an 'overblow', air is discharged following the drive cycle of one or more PJMs. The load consists of acoustic pressure (2Hz to 200Hz) developed in the first 200ms of the event and a load due to the bubble rising through the fluid.*

The acoustic load and the bubble load are design loads as defined by ASME B&PVC, Section 8, Division 1, UG-22, applied statically. The acoustic load is not added to the bubble rise load because they occur at different times during the overblow event.

Acoustic Load

- ***The acoustic design load in Figure 1 is applied to the visible (as viewed from the overblow origin) surface of cylindrical targets such as pipes, charge vessels, and PJMs. The load is applied in the direction normal to the principal axis of the target as illustrated in Figure 2. Note: The intended net effective load on the target is equal to the projected (i.e. cross-sectional) area of the object times the acoustic design load (psi) indicated in Figure 1.***
- ***Each target is considered independent of the surrounding targets: e.g. the surrounding targets do not impede the acoustic wave by casting a shadow, as illustrated in Figure 2.***
- ***The load is not applied to small supports such as gussets, brackets, tabs, clamps, and bolts because they are rigid and the pressure drop across the target is negligible.***
- ***When the vessel contains multiple PJMs, the load from one PJM is independent of the load from other PJMs. The loads are not additive for multiple overblows.***
- ***No internal components shall be placed within 5 PJM nozzle diameters (5 * 4 in = 20 in) of a spherical zone centered at any overblowing PJM nozzle.***

Figure 1: Acoustic Design Load

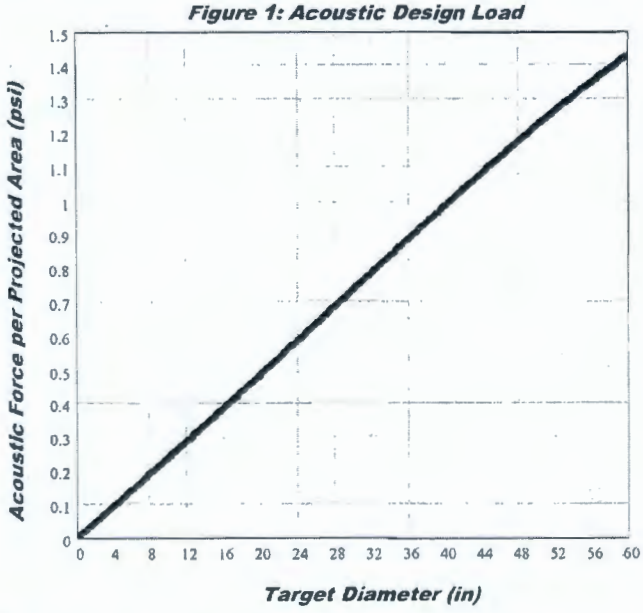

Figure 2: Load Application

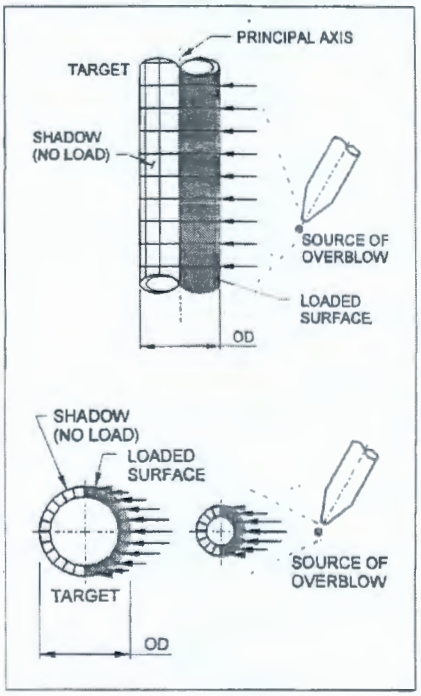

The following data is required to determine the load:

- ***Target Diameter***
- ***Target Principal Axis***
- ***Overblow Source Coordinates***

Number of Acoustic Cycles

1000 events X 40 cycles/event for a total of 40,000 acoustic cycles.

Bubble Rise Load

A vertical force per projected area of 1.7 psi is applied to the surfaces in the 36-inch diameter cylindrical zone centered at the overblowing PJM(s). The bubble can be at any elevation above the overblowing PJM and only affects one zone (36-inch diameter region) at a time. When there are multiple PJMs in a vessel (MOB), each PJM has it's own bubble. To simplify analysis the bubble can be applied in a continuous cylindrical zone above each PJM top head.

Number Bubble Rise Cycles

1000 events X 1 cycle/event

Nozzle Loads

Nozzle	Design Pressure (PSIG) (Note E)	Design Temp (°F) (Note E)	Size	Load Type	Loads - lbs			Moments - ft-lbs		
					Fx	Fy	Fz	Mx	My	Mz
N05	15	138	2"OD	Weight	50	60	50	75	75	75
				Seismic	106	70	106	158	237	237
				Thermal	40	30	50	50	100	100
N06	15 △11	230 △11	6"	Weight	N06 is parent nozzle, nozzle loads are applied via N06A, N06B, N06C					
				Seismic						
				Thermal						
N06A (Note C)	150	140	1"	Weight	15	27	15	20	20	20
				Seismic	30	39	30	44	55	55
				Thermal	10	10	20	20	30	30
N06B (Note C)	150	140	1"	Weight	15	24	15	20	20	20
				Seismic	30	21	30	40	55	55
				Thermal	10	10	20	20	30	30
N06C (Note C)	150	140	1"	Weight	15	26	15	20	20	20
				Seismic	30	33	30	40	55	55
				Thermal	10	10	20	20	30	30
N07	170	150	2"	Weight	50	60	50	75	75	75
				Seismic	177	70	129	275	521	423
				Thermal	40	30	50	50	100	100
N09	30	212	2"	Weight	50	60	50	75	75	75
				Seismic	106	70	106	158	299	237
				Thermal	40	30	50	50	100	100
N10	30	111	2"	Weight	50	60	50	75	75	75
				Seismic	106	70	106	174	437	237
				Thermal	40	30	50	50	100	100
N11	15	160	2"	Weight	50	60	50	75	75	75
				Seismic	106	70	106	158	237	237
				Thermal	40	52	50	50	100	114
N12	124	140	2"OD	Weight	50	60	50	75	75	75
				Seismic	106	70	106	158	237	237
				Thermal	40	30	50	50	100	100
N13	80	111	2"OD	Weight	50	60	50	75	75	75
				Seismic	106	70	106	158	237	237
				Thermal	40	30	50	50	100	100
N14	80	111	2"	Weight	50	60	50	75	75	75
				Seismic	106	70	106	158	237	237
				Thermal	40	30	50	50	100	100
N16	124	140	2"	Weight	50	60	50	75	75	75
				Seismic	106	70	106	158	237	237
				Thermal	40	44	50	50	100	100
N17	150	185	2"	Weight	50	60	50	75	75	75
				Seismic	106	70	106	158	237	237
				Thermal	40	30	105	50	242	100
N18	124	140	2"	Weight	50	60	50	75	75	75
				Seismic	106	70	106	158	278	237
				Thermal	40	75	50	50	100	100

Nozzle	Design Pressure (PSIG) (Note E)	Design Temp (°F) (Note E)	Size	Load Type	Loads - lbs			Moments - ft-lbs		
					Fx	Fy	Fz	Mx	My	Mz
N19	124	140	2"	Weight	50	100	50	75	75	75
				Seismic	106	84	106	188	237	237
				Thermal	40	30	50	50	100	100
N20	124	140	2"	Weight	50	60	50	75	75	75
				Seismic	106	70	106	158	237	237
				Thermal	40	36	50	57	100	100
N21	124	140	2"	Weight	50	60	50	75	75	75
				Seismic	106	70	106	158	237	237
				Thermal	40	30	50	50	100	100
N22	15	185	6"	Weight	210	335	210	598	374	374
				Seismic	663	443	663	2423	3638	3638
				Thermal	280	250	380	1030	2050	2050
N23	124	140	3"	Weight	52	132	52	119	75	75
				Seismic	162	147	162	840	701	701
				Thermal	70	62	90	190	380	380
N24	124	140	3"	Weight	52	84	52	119	75	75
				Seismic	162	108	162	468	701	701
				Thermal	70	82	90	190	380	380
N25	124	140	3"	Weight	52	134	52	119	75	75
				Seismic	162	222	162	580	701	701
				Thermal	70	87	90	190	380	380
N26	124	140	3"	Weight	52	140	52	119	75	150
				Seismic	162	164	162	468	701	701
				Thermal	70	60	90	190	380	380
N28	75	185	4"	Weight	87	140	87	216	135	135
				Seismic	274	183	274	878	1320	1320
				Thermal	120	100	150	360	720	720
N29	75	111	4"	Weight	87	147	87	216	135	135
				Seismic	274	183	274	878	1320	1320
				Thermal	120	100	150	360	720	720
N30	75	185	4"	Weight	87	191	87	216	135	135
				Seismic	274	183	274	878	1320	1320
				Thermal	120	100	150	360	720	720
N32	75	185	4"	Weight	87	291	130	246	135	135
				Seismic	274	183	274	878	1320	1320
				Thermal	120	100	556	2097	720	720
N34	170	175	2"	Weight	50	60	50	75	75	75
				Seismic	106	70	106	158	362	237
				Thermal	40	30	50	50	100	100
N35	170	175	2"	Weight	50	69	50	75	75	75
				Seismic	106	70	106	158	237	237
				Thermal	40	30	50	50	100	100
N36	170	175	2"	Weight	50	65	50	75	75	75
				Seismic	106	70	106	218	237	237
				Thermal	40	40	50	50	100	100

Nozzle	Design Pressure (PSIG) (Note E)	Design Temp (°F) (Note E)	Size	Load Type	Loads - lbs			Moments - ft-lbs		
					Fx	Fy	Fz	Mx	My	Mz
N37	15	120	6"	Weight	210	470	210	972	543	1263
				Seismic	723	730	663	2577	3638	3638
				Thermal	280	250	417	1030	2050	2050
N38 △11	169	120	2"	Weight	5	145	5	5	5	20
				Seismic	35	60	25	95	5	140
				Thermal	5	30	5	20	5	15
N39	N/A	N/A	24"	Weight	Manway - No Loads Applied					
				Seismic						
				Thermal						
N40	125	120	3"	Weight	52	108	52	119	75	75
				Seismic	162	108	162	468	701	701
				Thermal	106	60	102	190	380	380
N41	124	140	2"	Weight	50	60	50	75	75	75
				Seismic	106	70	106	158	237	237
				Thermal	40	30	50	50	100	100
N44	75	111	4"	Weight	87	177	87	216	135	135
				Seismic	274	183	274	878	1320	1320
				Thermal	120	100	150	360	720	720
N45	124	140	3"	Weight	52	84	52	119	86	75
				Seismic	162	108	162	468	794	701
				Thermal	70	66	90	246	380	380
N46	15	160	2"	Weight	50	63	50	75	75	75
				Seismic	106	70	106	158	237	237
				Thermal	40	30	50	50	100	100

Notes for Nozzle Loads

A. Direction of load application is per diagrams in 24590-WTP-3PS-MV00-T0001, Appendix A.
B. For nozzles in head: x = North/South, y = Vertical, and z = East/West - Vessel 0° defined as north.
C. Values provided at plate on top of parent nozzle.
D. Nozzle loads shown are to be used in place of those specified in 24590-WTP-3PS-MV00-T0001 - do not apply thermal reduction factors.
E. Nozzle Pressures and Temperatures to be used to qualify the nozzles only.
F. All Pretreatment RGM Seismic Piping Nozzles loads from Plant Design shall have a 1.75 load factor applied to address coupling effects between the flexible vessels and piping in accordance with the Seismic Classification and Evaluation for the Pretreatment Facility Piping and Vessels, 24590-WTP-RPT-ENG-09-040. △11

EQUIPMENT QUALIFICATION DATASHEET (EQD)

Equipment Identification		
Full Component Tag Number or BNI Stock Code Number	24590-PTF-MV-UFP-VSL-00062C	Safety Classification ☒ SC ☐ SS ☐ APC-PAM
Equipment Datasheet Number	24590-PTF-MVD-UFP-00007	
Description	Ultrafilter Permeate Collection Vessel	Seismic Category ☒ SC-I ☐ SC-II ☐ SC-III ☐ SC-IV ☐ SC-III Seismic Interaction only
Location (Facility / Building and Room No.)	Pretreatment Building; located in Room P-0104, Elev. 0'-00", column lines K.5/13.5	
Safety Function(s)	UFP-VSL-00062C (parent vessel) is considered a high active process vessel credited to prevent spills of large quantities of high activity process liquid and provide primary confinement for radioactive releases. Reference: 24590-WTP-PSAR-ESH-01-002-02, Table 4A-1, Preliminary Documented Safety Analysis to Support Construction Authorization; PT Facility Specific Information.	
Equipment Safety Function Type	☒ Passive Mechanical ☐ Active Mechanical	☐ Electrical
Seismic Safety Function ☒ Yes ☐ No	Seismic Operability Requirements ☒ During Seismic Event ☒ After Seismic Event	☐ None

Equipment Environmental Qualification (EEQ)

(Parameter values stated in this section do not include process conditions or operation induced conditions)

Classification of Environment ☒ Mild ☐ Harsh

Qualified Life (years) ☒ 40 ☐ Other

Parameter Type/Units	Parameter Value	Parameter Duration (number)	Duration Units	WTP Source Document Number
Normal Ambients				
High Temperature (°F)	113	Note a	Years	24590-PTF-U0D-W16T-00001, E-Note 1
Low Temperature (°F)	59	Note b	N/A	24590-PTF-U0D-W16T-00001, E-Note 1
High Relative Humidity (%RH)	90	Note c	N/A	24590-PTF-U0D-W16T-00001, E-Note 1
Low Relative Humidity (%RH)	5	Note c	N/A	24590-PTF-U0D-W16T-00001, E-Note 1
High Pressure (in.-w.g.)	0 (E-Note 2)	Note d	N/A	24590-PTF-U0D-W16T-00001, E-Note 1
Low Pressure (in.-w.g.)	(-) 1.4 (E-Note 2)	Note d	N/A	24590-PTF-U0D-W16T-00001, E-Note 1
Radiation Dose Rate (mRad/hr)	533000 (E-Note 4)	40 (E-Note 7)	Years (Note e-1)	24590-PTF-U0D-W16T-00001, E-Note 1
Plant/Process Induced Vibration	☐ Yes ☒ No			
Additional Normal Ambient Information:	N/A			

Equipment Environmental Qualification (EEQ) *(continued)*

Parameter Type/Units	Parameter Value	Parameter Duration (number)	Duration Units	WTP Source Document Number
Abnormal Ambients				
High Temperature (°F)	127	8	hours / year	24590-PTF-U0D-W16T-00001, E-Note 1
Low Temperature (°F)	40	Note b	N/A	24590-PTF-U0D-W16T-00001, E-Note 1
High Relative Humidity (%RH)	100c	Note c	N/A	24590-PTF-U0D-W16T-00001, E-Note 1
Low Relative Humidity (%RH)	6	Note c	N/A	24590-PTF-U0D-W16T-00001, E-Note 1
High Pressure (in.-w.g)	4 (E-Note 2)	Note d	N/A	24590-PTF-U0D-W16T-00001, E-Note 1
Low Pressure (in.-w.g)	(-) 7.3 (E-Note 2)	Note d	N/A	24590-PTF-U0D-W16T-00001, E-Note 1
Radiation Dose Rate (mR/hr)	533000 (E-Note 4)	0 (E-Note 7)	Years (Note e-1)	24590-PTF-U0D-W16T-00001, E-Note 1
Exposure to Wet Sprinkler System	☐ Yes ☒ No	N/A	hours	24590-PTF-U0D-W16T-00001, E-Note 1
Additional Abnormal Ambient Information	N/A			
Design Basis Events (DBE) Ambients				
High Temperature (°F)	135	1000	hours	24590-PTF-U0D-W16T-00001, E-Note 1
Low Temperature (°F)	40	Note b	N/A	24590-PTF-U0D-W16T-00001, E-Note 1
High Relative Humidity (%RH)	100c	40	hours	24590-PTF-U0D-W16T-00001, E-Note 1
Low Relative Humidity (%RH)	6	1000	hours	24590-PTF-U0D-W16T-00001, E-Note 1
High Pressure (in.-w.g)	4 (E-Note 2)	8	hours	24590-PTF-U0D-W16T-00001, E-Note 1
Low Pressure (in.-w.g)	(-) 7.3 (E-Note 2)	1000	hours	24590-PTF-U0D-W16T-00001, E-Note 1
Radiation Dose Rate (mR/hr)	533000 (E-Note 4)	0 (E-Note 7)	hours	24590-PTF-U0D-W16T-00001, E-Note 1
Submergence	☐ Yes ☒ No	N/A	hours	24590-PTF-U0D-W16T-00001, E-Note 5
Chemical/Spray Exposure	☒ Yes ☐ No	12.5	hours	24590-PTF-U0D-W16T-00001, E-Note 1
Additional DBE Information	N/A			

DBE Chemical Exposure Details

DBE Chemical Exposure Details	
DBE Chemical Types / Concentrations	Neutral Solution (RLD45), 77 °F, 7 pH Nitric Acid (2M) Process Rad Condensate Sodium Hydroxide (FEP08a), 104 °F, 11.5 pH Sodium Hydroxide (FEP12), 104 °F, 11.5 pH Sodium Hydroxide (FEP19), 121 °F, 15.5 pH Sodium Hydroxide (FRP13), 110 °F, 14.5 pH Sodium Hydroxide (FRP14), 191 °F, 15.5 pH Sodium Hydroxide (HLP09), 113 °F, 13.5 pH Sodium Hydroxide (HLP11), 113 °F, 14.5 pH Sodium Hydroxide (HLP12), 113 °F, 15.5 pH Sodium Hydroxide (HLP13), 113 °F, 15.5 pH Sodium Hydroxide (PVP02), 77 °F, 15.5 pH Sodium Hydroxide (PVP04), 77 °F, 12 pH Sodium Hydroxide (PVP06), 79 °F, 12.5 pH Sodium Hydroxide (TCP05), 120 °F, 15.5 pH Sodium Hydroxide (UFP01), 77 °F, 15.5 pH Sodium Hydroxide (UFP04), 77 °F, 15.5 pH Sodium Hydroxide (UFP26), 77 °F, 14.5 pH Sodium Hydroxide (UFP33), 84 °F, 14.5 pH Sodium Hydroxide (2M) Sodium Permanganate (1M) Strontium Nitrate (1M) Water

Electrical Interfaces Supporting the Safety Function	
Power Supply Voltage (VAC, VDC)	N/A
Power Supply Frequency (Hz)	N/A
Power Connection Method	N/A
I/O Signals to/from Equipment	N/A
I/O Connection Method	N/A

Mechanical Interfaces	
Mounting Configuration (orientation)	Vertically Mounted, Skirt
Mounting Method (bolts, welds, etc.)	Welded skirt to ring beam welded to embedment plates. Embedment plate details per 24590-PTF-DD-S13T-00039, 24590-PTF-DD-S13T-00036, 24590-PTF-DD-S13T-00043, and 24590-PTF-DD-S13T-00045 provided to the vendor in the material requisition
Auxiliary Devices	UFP-VSL-00023, UFP-VSL-00024, UFP-VSL-00025, UFP-VSL-00069, UFP-VSL-00070, UFP-VSL-00084 , UFP-PJM-00070, UFP-PJM-00073, UFP-PJM-00076, UFP-PJM-00077, UFP-PJM-00078, UFP-PJM-00107, UFP-RFD-00042, UFP-RFD-00043, UFP-RFD-00044, UFP-RFD-00045,

EQUIPMENT QUALIFICATION DATASHEET (EQD)

Mechanical Interfaces	
	UFP-RFD-00046, UFP-RFD-00048. All auxiliary devices are located internal to the parent vessel

Equipment Seismic Qualification (ESQ)

Parameter	Title	Reference/Document Number	Version / Revision	Remarks
WTP Seismic Design Specification	Engineering Specification for Seismic Qualification of Seismic Category I/II Equipment and Tanks Engineering Specification for Seismic Qualification Criteria for Pressure Vessels	24590-WTP-3PS-SS90-T0001 24590-WTP-3PS-MV00-T0002	2 3	N/A
Specified Seismic Load Parameters	Seismic Analysis of Pretreatment Building - WSGM In-Structure Response Spectra (ISRS)	24590-PTF-S0C-S15T-00057	A	CCN: 203392; WSGM ISRS Curves: Figures 66, 67 and 68

Equipment Qualification Notes and Additional Information

Note a) For thermal aging, the high normal temperature shall be assumed to subsist for 40 years less the duration of the high abnormal temperature. For any lesser qualified life, the normal and abnormal condition durations shall be assigned proportionally. The abnormal temperature is stated to subsist for a certain number of hours per year. It shall be taken to subsist for this number of hours for each year of the qualified life.

Note b) The ability to provide the safety function at the low normal temperature, the low abnormal temperature or the low DBE temperature (whichever be the lowest) shall be established by test, analysis, or operating experience. The thermal aging at these respective low temperatures will be conservatively covered by the thermal aging per item a) above. Therefore, no duration is assigned for the low temperatures.

Note c) The ability to provide the safety function at the extremes of the normal and abnormal humidity conditions, taking into consideration the high and the low normal and high and low abnormal, shall be established by test, analysis, or operating experience. No duration is assigned for the normal and abnormal humidity conditions.

Note d) If the performance of the safety function of the equipment is affected by ambient pressure, the ability to provide the safety function at the extremes of the normal and abnormal pressure conditions, taking into consideration the high and the low normal and the high and low abnormal pressures, shall be established by test, analysis, or operating experience. No duration is assigned to the normal and abnormal pressure conditions.

Note e) (1) If the abnormal radiation dose rate is the same as the normal radiation dose rate, the normal radiation dose rate shall be assumed to subsist for 40 years, or any lesser qualified life, and the duration of the abnormal radiation dose rate is "0."

(2) If the abnormal radiation dose rate is higher than the normal radiation dose rate, the abnormal radiation dose rate shall be assumed to subsist for 40 years, or any lesser qualified life, and the duration of the normal radiation dose rate is "0."

Note f) The DBE conditions shall be taken to subsist for the stated number of hours following the qualified life of the equipment.

Note g) Spray due to fire sprinkler actuation shall be taken to occur once over the entire qualified life duration for a period of 2 hours, even if the qualified life is a period less than 40 years. If spray qualification is provided for DBE conditions (whether for water or chemical spray), then separate qualification for the fire sprinkler spray need not be provided.

Note h) The values stated in this EQD are the ambients and do not include the thermodynamic and radiation conditions imposed by the process fluids, self-heating, etc. The data pertaining to process fluid and service induced parameters are to be taken into account where significant, such as in thermal aging analyses. These data can be obtained from the equipment data sheets or the Equipment Specification.

Note i) Equipment that is to be installed in inaccessible locations must be qualified to a 40-year life without the need for maintenance or replacement.

E-Note 1: BNI (BUYER) shall perform Equipment Environmental Qualification in accordance with 24590-WTP-DC-ENG-06-001, Design Criteria for Equipment Seismic and Environmental Qualification.

E-Note 2: Where pressure is given in inches of water column (in-w.c.) in the source document, it is generally assumed that this is in reference to atmospheric pressure and is therefore equivalent to inches of water gage (in-w.g.)

E-Note 3: BNI (BUYER) shall perform Equipment Seismic Qualification in accordance with the listed parameters and the applicable specification requirements.

E-Note 4: Radiation Dose Rates are for determining shielding requirements only for the black cell and are not at the source (vessel). Since the vessel is all metallic and the source has no neutron components for material embrittlement, the dose rates are of no concern on the vessel or its subcomponents.

EQUIPMENT QUALIFICATION DATASHEET (EQD)

Equipment Qualification Notes and Additional Information

E-Note 5: Flood height is 2.08 ft above the floor, bottom of vessel is above this level therefore, no submergence evaluation is required.

E-Note 6: Environmental data shown are for the room only.

E-Note 7: Normal, Abnormal, and DBE dose rates are the same, therefore, abnormal & DBE doses do not add to total integrated dose based on normal dose rates over 40 years.

DOE Radioactive Materials Disclaimer:
Please note that source, special nuclear and byproduct materials, as defined in the Atomic Energy Act of 1954 (AEA), are regulated at the US Department of Energy (DOE) facilities exclusively by DOE acting pursuant to its AEA authority. DOE asserts, that pursuant to the AEA, it has sole and exclusive responsibility and authority to regulate source, special nuclear, and byproduct materials at DOE-owned nuclear facilities. Information contained herein on radionuclides is provided for process description purposes only.

Screening / Evaluation Required? If yes per 24590-WTP-GPP-SREG-002, E&NS signature required below	X	Yes		No

Approval

Rev	Description	System Engineer	Vessel Engineer	Checked	Reviewed/ MET	E&NS	Approved	Date
0	Issued For Purchase	PA	HK	US/CS	N/A	N/A	SK	10/10/02
1	Revised as Noted	MA	HK	PA/CS	JJ	N/A	MWH	08/18/03
2	Revised as Noted	MA	HK	PA/CS	JJ	N/A	MWH	09/11/03
3	Revised as Noted	MA	HK	PA/CS	JJ	N/A	MWH	12/10/03
4	Revised as Noted	M. Askar	H Khurana	P. Aviguetero C. Slater	J. Julyk	N/A	C. Morley for M. Hoffmann	02/05/04
5	Added hydrodynamic loads and other revisions as noted.	M. Askar	H Khurana	P. Aviguetero R. Tiwari	J. Julyk	N/A	M Hoffmann	09/08/04
6	Added note 9, deleted note 8. revised P&ID references and changes as noted.	M. Askar	H Khurana	P. Avigue	J. Julyk	N/A	M Hoffmann	12/17/05
7	Over-blow cycles revised from 100 to 1000, on page 3. Deleted note 9 on page 2 and revised as noted.	A.Moretta	H Khurana	J. Olson R. P. Voria	CS	N/A	J. Julyk	09/04/05
8	Revised per note 10 on page 2 and as noted	M. Askar	H Khurana	J. Polani P Aviguetero	C. Slater D. Adler	N/A	J. Julyk	10/28/05
9	Revised per Note 15. Supersedes 24590-PTF-MVD-UFP-P0007, Rev 2.	D Vo	M Seed	S Jain	D Adler	J Hinckley	J Julyk	05/11/09
10	Revised per Note 16 and as noted by revision triangles.	D Vo	M Seed	D Harris	D Adler	J Hinckley	J Julyk	06/17/10
11	Incorporated 24590-PTF-MVN-UFP-00047. Revised Equipment Qualification data to new form, Hydrodynamic Loads Due to PJM Operations, and as noted by revision triangles. Revised a charge vessel CTN (typo).	M Seed MASeed	L Rodgers	R Zielinski for B Lindberg R Zielinski	D Adler	J Hinckley	J Julyk	12/22/10

ATTACHMENT 1: Page 1 of 2
REFERENCES for Data Sheets: 24590-PTF-MVD-UFP-00005, 00006, 00007, Rev 11 *(For BNI Use only)*
Vessel Tags: UFP-VSL-00062A/B/C

Data	Document #	Rev	Document Title/ Comments
Quality Level	24590-PTF-M6-UFP-00004001	0	*P&ID Ultrafiltration Permeate Collection System Vessels*
Seismic Category	24590-PTF-M6-UFP-00004001	0	*P&ID Ultrafiltration Permeate Collection System Vessels*
Design Specific Gravity	24590-WTP-RPT-ENG-07-007	0A 11	*Process Stream Properties* / Section 4.18
Max Operating Volume	24590-PTF-M6C-UFP-00005	D	*Vessel Sizing Calc for Ultrafiltration Permeate Vessels UFP-62A, 62B, 62C* / Section 8
Total Volume	24590-PTF-M6C-UFP-00005	D	*Vessel Sizing Calc for Ultrafiltration Permeate Vessels UFP-62A, 62B, 62C* / Section 7.1.20
Inside Diameter	24590-PTF-M6C-UFP-00005	D	*Vessel Sizing Calc for Ultrafiltration Permeate Vessels UFP-62A, 62B, 62C* / Section 8
Length TL-TL	24590-PTF-M6C-UFP-00005	D	*Vessel Sizing Calc for Ultrafiltration Permeate Vessels UFP-62A, 62B, 62C* / Ssection 8
Operating Pressure (external)	24590-PTF-M6C-PVP-00017	A	*HADCRT Analysis of PTF PVP System at various Operating Scenarios / (see sheet 14 - the PVP scrubber inlet is controlled to 35 in-wg)* External pressure of 1.5 psig is based on a normal operating pressure of -35 in WG (1.26 psig) with an additional margin. (24590-PTF-M5-V17T-00021001 & 00021004 indicate the process flow diagrams)
Design Pressure (internal)	24590-WTP-DB-ENG-01-001	1P 11	*Basis of Design*
Design Pressure (external)	24590-PTF-M6C-PVP-00017	A	*HADCRT Analysis of PTF PVP System at various Operating Scenarios /* External design pressure of 2.0 psig is based on a normal operating pressure of -35 in WG (1.26 psig) with an additional margin
Operating Temp	24590-WTP-RPT-ENG-07-007	0A 11	*Process Stream Properties, Section 4.18*
Design Temp	24590-WTP-RPT-ENG-07-007	0A 11	*Process Stream Properties* / Section 4.18
Corrosion Allowance, Erosion allowance	24590-PTF-N1D-UFP-00008	5	*Corrosion Evaluation, UFP-VSL-00062A/B/C*
Materials of Construction	24590-PTF-N1D-UFP-00008	5	*Corrosion Evaluation, UFP-VSL-00062A/B/C* / identifies use of 316 SST with max carbon content of 0.03% - this is for material in contact with process fluids, the vessel support material is 304 SST
Cyclic Data (Vessel)	24590-PTF-MVC-10-00003	C	*PTF Vessel Cyclic Datasheet Inputs (24590-PTF-MVE-10-00008)* 11
Cyclic Data (PJM)	24590-PTF-MVC-10-00003	C	*PTF Vessel Cyclic Datasheet Inputs (24590-PTF-MVE-10-00012)* 11
Design Pressure (PJM)	24590-PTF-MVC-10-00003	C	*PTF Vessel Cyclic Datasheet Inputs (24590-PTF-MVE-10-00012)* 11
11 Operating Pressure (PJM)	24590-PTF-MVC-10-00003	C	*PTF Vessel Cyclic Datasheet Inputs*
Operating Temperature (PJM)			*Same as parent vessel*
11 PJM Thrust	24590-WTP-M6C-50-00011	A	*Pulse Jet Mixer Internal Pressures and Thrust*
11 Operating Pressure (Charge Vessels)	24590-PTF-MVC-10-00003	C	*PTF Vessel Cyclic Datasheet Inputs (24590-PTF-MVE-10-00011)*
11 Operating Temperature (Charge Vessels)			*Same as parent vessel*

REFERENCES for Data Sheets: 24590-PTF-MVD-UFP-00005, 00006, 00007, Rev 11 *(For BNI Use only)*
Vessel Tags: UFP-VSL-00062A/B/C

Data	Document #	Rev	Document Title/ Comments
Cyclic Data (Charge Vessels)	24590-PTF-MVC-10-00003	C	*PTF Vessel Cyclic Datasheet Inputs (24590-PTF-MVE-10-00011)* 11
Design Pressure (Charge Vessels)	24590-PTF-MVC-10-00003	C	*PTF Vessel Cyclic Datasheet Inputs (24590-PTF-MVE-10-00011)*
Hydrodynamic Loads 11	24590-WTP-MVC-50-00001	A	*Hydrodynamic Loads for Normal PJM Operation in Vessels with Newtonian Fluids* / Section 8 for 6 PJM
Single PJM Overblow Loads	24590-WTP-MVC-50-00008	C	*Hydrodynamic Loads for PJM Overblow in Vessels* / Figure 5, sheet 27
PJM Overblow Loads	24590-WTP-MVC-50-00011	B	*Pulse Jet Mixer Overblow Vessel Loads*
Single Overblow Cycles	24590-PTF-MVC-10-00003	C	*PTF Vessel Cyclic Datasheet Inputs* (24590-PTF-MVE-10-00004) 11
Multiple Overblow Cycles	24590-PTF-MVC-10-00003	C	*PTF Vessel Cyclic Datasheet Inputs* (24590-PTF-MVC-10-00004) 11
Nozzle Loads 11	CCN 126197 (UFP-62A)	N/A	*Nozzle Loads for UFP-VSL-00062A*
	CCN 126198 (UFP-62B)	N/A	*Nozzle Loads for UFP-VSL-00062B*
	CCN 125817 (UFP-62C)	N/A	*Nozzle Loads for UFP-VSL-00062C*
	CCN 224448 (UFP-62A)	N/A	*Supplemental Nozzle Design Loads for UFP-VSL-00062A (Supplements CCN 126197)*
	CCN 224449 (UFP-62B)	N/A	*Supplemental Nozzle Design Loads for UFP-VSL-00062B (Supplements CCN 126198)*
	CCN 224450 (UFP-62C)	N/A	*Supplemental Nozzle Design Loads for UFP-VSL-00062C (Supplements CCN 125817)*
Nozzle Design Pressures and Temperatures (UFP-62A)	24590-PTF-M6X-UFP-00317	0	*MS Line List for 24590-PTF-M6-UFP-00004001*
	24590-PTF-M6X-UFP-00094	0	*MS Line List for 24590-PTF-M6-UFP-00005007*
	24590-PTF-M6X-UFP-00122	0	*MS Line List for 24590-PTF-M6-UFP-00006007*
	24590-PTF-M6X-UFP-00428	0	*MS Line List for 24590-PTF-M6-UFP-00015001*
Nozzle Design Pressures and Temperatures (UFP-62B)	24590-PTF-M6X-UFP-00320	0	*MS Line List for 24590-PTF-M6-UFP-00004002*
	24590-PTF-M6X-UFP-00094	0	*MS Line List for 24590-PTF-M6-UFP-00005007*
	24590-PTF-M6X-UFP-00122	0	*MS Line List for 24590-PTF-M6-UFP-00006007*
	24590-PTF-M6X-UFP-00428	0	*MS Line List for 24590-PTF-M6-UFP-00015001*
Nozzle Design Pressures and Temperatures (UFP-62C)	24590-PTF-M6X-UFP-00323	0	*MS Line List for 24590-PTF-M6-UFP-00004003*
	24590-PTF-M6X-UFP-00199	0	*MS Line List for 24590-PTF-M6-UFP-00009006*
	24590-PTF-M6X-UFP-00362	0	*MS Line List for 24590-PTF-M6-UFP-00011005*
	24590-PTF-M6X-PWD-00113	2	*MS Line List for 24590-PTF-M6-PWD-00046*

 R11249346

Drawing Change Notice

CHANGE DOCUMENT NO.
24590-PTF-VDCN-MS-10-00007

JOB NO.	TITLE FOR CHANGE NOTICE
24590	UFP-VSL-00062A Redesign

DESIGN DOCUMENT NUMBER	REV	DESIGN DOCUMENT NUMBER	REV
24590-QL-POD-MVA0-00001-03-01	F	24590-QL-POD-MVA0-00001-03-02	F
24590-QL-POD-MVA0-00001-03-03	F	24590-QL-POD-MVA0-00001-03-20	G
24590-QL-POD-MVA0-00001-03-22	E	24590-QL-POD-MVA0-00001-03-23	E
24590-QL-POD-MVA0-00001-03-24	E	24590-QL-POD-MVA0-00001-03-40	B
24590-QL-POD-MVA0-00001-03-41	B		

PART OF DESIGN CHANGE PACKAGE (DCP)? ☐ Yes ☒ No DCP No.: N/A Rev:

JUSTIFICATION FOR CHANGE	CAUSE CODE
Based on the re-analysis of UFP-VSL-00062A, per calculation 24590-PTF-MVC-UFP-00023, for revised seismic conditions and design evolution, required a redesign of the vessel.	01 and 23

Supersedes Change Document ☐ Yes ☒ No

ECN Needed ☐ Yes ☒ No

REQUIREMENTS REVIEW

Client Approval Required ☐ Yes ☒ No | Interface Resolution Required * ☐ Yes ☒ No

Address any "yes" answers in the description

DESCRIPTION OF CHANGE

NOTE: Components removed or deleted per this VDCN are to be removed from the actual vessel unless otherwise noted.

1. **Affected Document: 24590-QL-POD-MVA0-00001-03-01 (see Attachment 1, page 1 of this VDCN).**
   a.) Design Conditions block: Change 'Design Pressure' to 15 / -2.0
   b.) Design Conditions block: Change 'Design Temperature' to 230°F.
   c.) Bill of Materials block: Delete the following Line Items:
   Line item 46
   Line item 49
   Line item 54
   Line item 55
   Line item 58

   Please note that source, special nuclear, and byproduct materials, as defined in the Atomic Energy Act of 1954 (AEA) are regulated at the U. S. Department of Energy (DOE) facilities exclusively by DOE acting pursuant to its AEA authority. DOE asserts that pursuant to AEA, it has sole and exclusive responsibility and authority to regulate source, special nuclear, and byproduct materials at DOE-owned nuclear facilities. Information contained herein on radionuclides is provided for process description purposes only.

   d.) Bill of Materials block, line item 47, change as follows:
   (1.) Thick/Size: SCH 160
   (2.) Material: SA403 TP316/316L W 0.030% MAX C
   (3.) Description: 2" SCH 160 CAP.
   e.) Bill of Materials block: Add item 59 and 60 shown on Attachment 1, page 16 of this VDCN.
   f.) Estimated Weight (in LBS) block, change as follows:
   OPERATING - 512,285 lbs
   FULL WATER - 401,100 lbs
   EMPTY - 103,000 lbs
   g.) General Notes and Special Requirements: Delete Note 8 and replace with the following text:
   Fabrication tolerances for field modifications shall be per 24590-WTP-MV-M59T-00001 (Pressure Vessel Tolerances Standard Details) and PFI Standard ES-24 (Pipe Bending Methods, Tolerances, Process and Material Requirement). For tolerances not specified by these standards, the following shall apply, unless otherwise noted:

Dimension	Tolerance
Linear < 12 inch	± 1/8 inch
Linear ≥ 12 inch	± 1/4 inch
Angular	± 2 degrees

Drawing Change Notice

CHANGE DOCUMENT NO.
24590-PTF-VDCN-MS-10-00007

JOB NO.	TITLE FOR CHANGE NOTICE
24590	UFP-VSL-00062A Redesign

DESCRIPTION OF CHANGE

h.) RT per ASME Section VIII Div. 1 Appendix 4: Item 3, delete second sentence "This does not include internal pipe supports and braces".

i.) Connection Schedule block: Change the 'NECK THK' to SCH 160 for the following nozzles:

N09
N28
N32
N38
N44

j.) Connection Schedule block: Change the 'NECK MATERIAL' to SA312 TP316/316L 0.030% MAX C for the following nozzles:

N09
N28
N32
N38
N44

k.) RT per ASME Section VIII Div.1 Appendix 4 block: Change Appendix 4 to read "UW-51".

l.) Under title block, delete BNI reference drawing entitled, "REF DWG 24590-PTF MV-UFP-00005 REV 0".

2. **Affected Document: 24590-QL-POD-MVA0-00001-03-02 (see Attachment 1, page 2 of this VDCN).**

a.) Vessel Elevation View:

(1.) Delete supports and associated part bubbles depicted on drawing.

(2.) Delete support dimensions depicted on drawing.

(3.) Under title block, delete BNI reference entitled, "REF DWG 24590-PTF MV-UFP-00005 REV 0".

3. **Affected Document: 24590-QL-POD-MVA0-00001-03-03 (see Attachment 1, page 3 of this VDCN).**

a.) Vessel Orientation: Delete supports as shown.

b.) Internal Pipe Brace Details: Remove items 54 and 55. NOTE: Pipe Lugs are to remain in place.

c.) Internal Pipe Brace Details: Delete detail and remove components.

d.) Under title block, delete BNI reference drawing entitled, "REF DWG 24590-PTF MV-UFP-00005 REV 0".

4. **Affected Document: 24590-QL-POD-MVA0-00001-03-40 (see Attachment 1, page 4 of this VDCN).**

a.) Elevation View: Delete Elevation View and replace with NORTH ELEVATION VIEW shown on Attachment 1, page 5 of this VDCN.

b.) Internal Vessel Support Orientation: Remove view as this will be covered in Sections B-B, C-C, D-D, E-E, F-F, and G-G shown on Attachment 1, page 5 of this VDCN.

c.) Add BILL OF MATERIALS items 12 through 55 shown on Attachment 1, page 5 of this VDCN.

d.) Add SECTION B-B shown on Attachment 1, page 6 of this VDCN.

e.) Add SECTION J-J and item 12 THERMAL EXPANSION S-BEND shown on Attachment 1, page 6 of this VDCN.

f.) Add SECTION K-K and item 14 THERMAL EXPANSION S-BEND shown on Attachment 1, page 6 of this VDCN.

g.) Add SECTION L-L and item 13 THERMAL EXPANSION S-BEND shown on Attachment 1, page 6 of this VDCN.

h.) Shown on Attachment 1, page 7 of this VDCN, add the following:

(1.) SECTION C-C

(2.) DETAIL-A

(3.) Item 21 - GUIDE RING

(4.) Item 22 - GUIDE RING

(5.) Item 29 - GUIDE RING

(6.) Construction, NOTE 1

Drawing Change Notice

CHANGE DOCUMENT NO.
24590-PTF-VDCN-MS-10-00007

JOB NO.	TITLE FOR CHANGE NOTICE
24590	UFP-VSL-00062A Redesign

DESCRIPTION OF CHANGE

i.) Construction Notes block add the following numbered notes:

NOTE 2: WHERE PLATE MATERIAL IS SPECIFIED AS ASME SA240, ASME SA479 MATERIAL MAY BE SUBSTITUTED.

j.) Add SECTION D-D shown on Attachment 1, page 8 of this VDCN.

k.) Add SECTION E-E shown on Attachment 1, page 8 of this VDCN.

l.) Add Detail C shown on Attachment 1, page 9 of this VDCN.

m.) Add SECTION F-F shown on Attachment 1, page 12 of this VDCN.

n.) Add SECTION G-G shown on Attachment 1, page 12 of this VDCN.

5. **Affected Document: 24590-QL-POD-MVA0-00001-03-22 (see Attachment 1, page 10 of this VDCN).**

a.) Instrument Assy Detail: Remove support item 49 and replace with SECTION H-H and DETAIL-E shown on Attachment 1, page 12 of this VDCN.

b.) Thermowell Assembly: Remove support item 49 and replace with SECTION M-M and DETAIL-D shown on Attachment 1, page 12 of this VDCN.

c.) Under title block, delete BNI reference drawing entitled, "REF DWG 24590-PTF MV-UFP-00005 REV 0".

6. **Affected Document: 24590-QL-POD-MVA0-00001-03-24 (see Attachment 1, page 11 of this VDCN).**

a.) 2" SCH 80 Nozzle W/ int. Projection: Delete N09.

b.) Nozzle Stub Splice: Delete and replace with 'Typical SCH 160 Nozzle Detail.

c.) Typ Lower Support For Dip Tubes: Remove support item 49.

NOTE: This support detail is covered on Vendor drawing 24590-QL-POD-MVA0-00001-03-22 as reflected in item 5 of this VDCN.

d.) Under title block, delete BNI reference drawing entitled, "REF DWG 24590-PTF MV-UFP-00005 REV 0".

7. **Affected Document: 24590-QL-POD-MVA0-00001-03-41 (see Attachment 1, page 13 of this VDCN).**

a.) Typical Outer PJM Pipe Support: Delete Typical Outer PJM Pipe Support view and replace with TYPICAL OUTER PJM SUPPORT, SECTION M-M and associated views shown on Attachment 1, page 16 of this VDCN.

b.) 30" Charge Vessel & Inner PJM: Delete 30" Charge Vessel & Inner PJM view and replace with VIEW A, 30" CHARGE VESSEL & INNER PJM SUPPORT, SECTION P-P, item 54 DETAIL G and associated views shown on Attachment 1, page 14 of this VDCN.

c.) 36" Charge Vessel & Inner PJM Support: Delete 36" Charge Vessel & Inner PJM Support and replace with 36" CHARGE VESSEL & INNER PJM SUPPORT, SECTION N-N, item 35 DETAIL F, and associated views shown on Attachment 1, page 14 of this VDCN.

8. **Affected Document: 24590-QL-POD-MVA0-00001-03-20 (see Attachment 1, page 15 of this VDCN).**

a.) 36" CV Delivery RFD Pump Detail: Remove support item 46 from TYP SUPPORT DETAIL and reference to SEE TYP SUPPORT DETAIL including dimension.

b.) 30" CV Delivery RFD Pump Detail: Remove support item 46 from TYP SUPPORT DETAIL and reference to SEE TYP SUPPORT DETAIL including dimension.

c.) Sampler RFD Pump Detail:

(1.) Remove support item 58 from TYP SUPPORT DETAIL.

(2.) Add DETAIL J, SECTION R-R, and SAMPLER PUMP RFD DETAIL shown on Attachment 1, page 16 of this VDCN.

(3.) Delete Sampler detail and replace with SAMPLER PUMP RFD ASSEMBLY and DETAIL H shown on Attachment 1, page 16 of this VDCN.

d.) Under title block, delete BNI reference drawing entitled, "REF DWG 24590-PTF MV-UFP-00005 REV 0".

Drawing Change Notice

CHANGE DOCUMENT NO.
24590-PTF-VDCN-MS-10-00007

JOB NO.	TITLE FOR CHANGE NOTICE
24590	UFP-VSL-00062A Redesign

DESCRIPTION OF CHANGE

9. **Affected Document: 24590-QL-POD-MVA0-00001-03-23 (see Attachment 1, page 17 of this VDCN).**

   a.) 2" SCH 80 CAPPED NOZZLE W/ INT. PROJECTION (detail for N38): Remove item 47 and replace with 2" SCH 160 CAPPED NOZZLE.

   b.) 2" SCH 80 CAPPED NOZZLE W/ INT. PROJECTION (detail for N38), change to read as follows: 2" SCH 160 CAPPED NOZZLE W/ INT. PROJECTION.

   c.) 2" SCH 80 CAPPED NOZZLE W/ INT. PROJECTION (detail for N38): Change dimension of .218" to read .343".

   d.) 4" SCH 80 OUTLET FROM INTERNALS (detail for N28, N29, N30, N32, N44): Delete N28, N32, and N44.

   e.) Add SECTION Q-Q, 4" SCH 160 INLET TO INTERNALS shown on Attachment 1, page 6 of this VDCN.

   f.) Under title block, delete BNI reference drawing entitled, "REF DWG 24590-PTF MV-UFP-00005 REV 0".

ORIGINATOR	CHECKER
M. Mudry	L. Rodgers

Reviews

CON - K. Keck R ZIELINSKI for K Keck per CCN 227733 Ramona Zielinski	E&NS - J. Rathbun	CS&A - S. Germain	MET - J. Disney
MS&PE - D. Vo	PD - J. McGrath	~~PE&T - B. Stiver~~ BAK 12/22/10 PE&T - J. Olson	

Approval(s)

PEQ - J. Julyk			

Date *(inserted by final approver)*: 12/23/10

CHANGE N09, N28, N32, N38, AND N44 TO SCH 160 - (BY RPP-WTP), AND CHANGE MATERIAL TO: SA312 TP316/316L 0.030% max C (BY RPP-WTP)

DESIGN CONDITIONS

SPECIFICATIONS	PARENT VESSEL
DESIGN PRESSURE	[struck through] *15/-2.0 BY RPP-WTP*
HYDRO-TEST PRESSURE	[struck through]
DESIGN TEMPERATURE	[struck through] *230°F BY RPP-WTP*
MDMT	40° F
CODE	ASME SECTION VIII, DIVISION I, 2001 EDITION, 2001 ADDENDUM
CODE STAMP (National Board No.)	REQUIRED
NON-DESTRUCTIVE TESTING	VT, UT, PT, RT, HELIUM TESTING, AND HYDROSTATIC TESTING PER ASME SECT. VIII, DIV. I
RADIOGRAPH (5)	PER PARA. 6.3.3 OF SPECIFICATION 24590-WTP-3PS-MVD0-00006
JOINT EFFICIENCY	PER UW-12
CORROSION ALLOWANCE	0.04"
INSPECTION OPENINGS	REQUIRED PER UG-46(a)
IMPACT TESTING	NOT REQUIRED PER UHA-51(d)
POSTWELD HEAT TREATING	NOT REQUIRED PER UHA-32
MATERIAL, BOLTS/STUDS/NUTS	NOT APPLICABLE
MATERIAL, GASKETS	NOT APPLICABLE
INSULATION	NOT REQUIRED
WIND DESIGN	NOT REQUIRED
SNOW DESIGN	NOT REQUIRED
SEISMIC DESIGN	SC-I PER 24590-WTP-3PS-MVD0-T0002 & 24590-WTP-3PS-SS90-T0001
BECHTEL QUALITY LEVEL	QL-I

(1A) (2) (3) BILL OF MATERIALS

MK	THICK/SIZE	MATERIAL	HEAT NO.	DESCRIPTION	QTY
1	¾"	SA-240-316 w/ 0.030% max. C		SHELL	1
2	¾" NOM.	SA-240-316 w/ 0.030% max. C		TOP HEAD - 180" I.D. 2:1 SE w/ 2" S.F. (¾" MIN. AFTER FORMING)	1
3	¾" NOM.	SA-240-316 w/ 0.030% max. C		BOTTOM HEAD - 180" I.D. 2:1 SE w/ 2" S.F. (¾" MIN. AFTER FORMING)	1
4					
5	¾"	SA-240-304 w/ 0.030% max. C		SUPPORT SKIRT	1
6	1½"	SA-240-304 w/ 0.030% max. C		SUPPORT RING BEAM TOP	1
7	1"	SA-240-304 w/ 0.030% max. C		SUPPORT RING BEAM SHELL	1
8	1½"	A-572-Gr50		SUPPORT RING BEAM BOTTOM	1
9					
10	1"	SA-240-316 w/ 0.030% max. C		TAILING LUG BACKING PLATE - 20" x 20"	1
11	3"	SA-240-304 w/ 0.030% max. C		TAILING LUG	1
12	1"	SA-240-304 w/ 0.030% max. C		TAILING LUG GUSSET	1
13	—	———		DELETED	-
14					
15					
16					
17	½"	SA-240-316 w/ 0.030% max. C		LIFTING TRUNNION REPAD - 22" O.D.	2
18	½"	SA-240-304 w/ 0.030% max. C		LIFTING TRUNNION BARREL - 16" O.D. x 4" LONG	2
19	½"	SA-240-304 w/ 0.030% max. C		LIFTING TRUNNION KEEPER PLATE - 24" O.D.	2
20					
21	½"	SA-240-316 w/ 0.030% max. C		INSTRUMENT ASSEMBLY COVER PLATE	1
22	¼" x 1"	SA-240-316 w/ 0.030% max. C		INSTRUMENT ASSEMBLY SPACERS	28
23	2" SCH 160	SMLS. SA-312-TP316 w/ 0.030% max. C		BUBBLER SHELL	2
24	2" x 1"	SMLS. SA-312-TP316 w/ 0.030% max. C		BUBBLER REDUCER - 2 x 1, SCH 160	2
25	⅝" NOM.	SA-182-F316 w/ 0.030% max. C		MANWAY HEAD, 24" O.D. ASME F&D w/ 1½" S.F.	1
26					
27					
28					
29					
30	1½"Ø	SA-182-F316 w/ 0.030% max. C		THERMOWELL POCKET (MACHINE PER DETAIL)	1
31	1" SCH 160	SMLS. SA-312-TP316 w/ 0.030% max. C		THERMOWELL DIP TUBE	2
32	2" SCH 40	SMLS. SA-312-TP316 w/ 0.030% max. C		WASH RING PIPE	1
33	⅜"	SA-240-316 w/ 0.030% max. C		WASH RING END CAP PLATE	6
34	⅜" x 2"	SA-240-316 w/ 0.030% max. C		WASH RING SUPPORTS	6
35	2" SCH 40	SMLS. SA-403-WP316S w/ 0.030% max. C		WASH RING TEE - 2" SCH 40 STRAIGHT TEE	3
36					
37	⅜"	SA-240-316 w/ 0.030% max. C		NAMEPLATE BRACKET (14" x 14" L w/ 2" LEGS) (4)	1
38					
39	MISC.	SA-240-316 w/ 0.030% max. C		PULSE JET MIXER (8) - SEE DWG. 3005A FOR DETAILS	6
40	MISC.	SA-240-316 w/ 0.030% max. C		CHARGE VESSEL (36") - SEE DWG. 3005B FOR DETAILS	3
41	—	———		DELETED	-
42	MISC.	SA-240-316 w/ 0.030% max. C		CHARGE VESSEL (30") - SEE DWG. 3005D FOR DETAILS	2
43	½"	SA-240-304 w/ 0.030% max. C		SKIRT ACCESS (24" Ø)	2
44	~~MISC.~~	~~SA-240-316 w/ 0.030% max. C~~		~~CHARGE VESSEL (18") - SEE DWG. 3005E FOR DETAILS~~	1
45	4" SCH 40	SA-312-TP316 w/ 0.030% max. C		SKIRT VENT (4½")	4
46	~~[illegible]~~	~~SA-312-TP316 w/ 0.030% max. C~~		~~INTERNAL PIPING SUPPORT~~	
47	~~STD.~~	~~SA-403-316 w/ 0.030% max. C~~		~~[illegible]~~ *2" SCH 160 CAP*	1
48	—	———		DELETED	-
49	~~[illegible]~~	~~SA-240-316 w/ 0.030% max. C~~		~~INTERNAL PIPING LOWER SUPPORT~~	
50	6" SCH 80	SA-312-TP316 w/ 0.030% max. C		CONNECTING PIPE, LENGTH A/R	3
51	1¼"	SA-240-316 w/ 0.030% max. C		INSERT PLATE (15" OD)	1
52	Sch 160	SA-403WP3-316 w/ 0.030% max. C		4" x 3" ECC. REDUCER - ENDS MACHINED TO SCH 80	5
53	4" SCH 80	SA-312-TP316 w/ 0.030% max. C		CONNECTING PIPE, LENGTH A/R	5
54	~~[illegible]~~	~~SA-479-316 w/ 0.030% max. C~~		~~INTERNAL PIPING SUPPORT ANGLE~~	
55	~~[illegible]~~	~~SA-479-316 w/ 0.030% max. C~~		~~INTERNAL PIPING SUPPORT FORMED U-BOLT FOR 1" PIPE~~	
56	1" SCH 160	SA-312-TP316 w/ 0.030% max. C		CONNECTING PIPE, LENGTH A/R	1
57	1" SCH 160	SA-312-TP316 w/ 0.030% max. C		CONNECTING PIPE, LENGTH A/R	1
58	~~[illegible]~~	~~SA-312-TP316 w/ 0.030% max. C~~		~~INTERNAL PIPING SUPPORT~~	

CHANGE ITEM 47 AS FOLLOWS: THICK/SIZE = SCH 160; MATERIAL = SA403 TP316/316L w 0.03% max C BY RPP-WTP

DELETE LINE ITEMS: 46, 49, 54, 55, 58 BY RPP-WTP

CHANGE ITEM 47 TO 2" SCH 160 CAP BY RPP-WTP

ADD ITEM 59 - BY RPP-WTP

ADD ITEM 60 - BY RPP-WTP

(2) (1A) (1) CONNECTION SCHEDULE

MK	SIZE	NECK MATERIAL	NECK THK	HEAT NO.	DESCRIPTION	ELEV. "Z"	ELEV. "X"	RADIUS FROM CENTER	TYPE	CONN. THK
N05	2" OD	MACHINED SA-182-F316 w/ 0.030% max. C	SPCL		TEMPERATURE (4)	306"	51"	30"	STUB	¾" SCH 10
N06	6" NPS	SEAMLESS SA-312-TP316 w/ 0.030% max. C	SCH 80		INSTRUMENTATION (4)	308½"	35½"	30"	STUB	NA
N06A	1" NPS	SEAMLESS SA-312-TP316 w/ 0.030% max. C	SCH 160		BALANCE	314"	54"	30"	STUB	1" SCH 40
N06B	1" NPS	SEAMLESS SA-312-TP316 w/ 0.030% max. C	SCH 160		DENSITY	315"	60"	30"	STUB	1" SCH 40
N06C	1" NPS	SEAMLESS SA-312-TP316 w/ 0.030% max. C	SCH 160		LEVEL	316"	61"	30"	STUB	1" SCH 40
N07	2" NPS	SEAMLESS SA-312-TP316 w/ 0.030% max. C	SCH 80		INLET	248"	45"	60"	STUB	2" SCH 40
N09	2" NPS	~~SEAMLESS SA-312-TP316 w/ 0.030% max. C~~	~~SCH 80~~	*SCH 160*	INLET	307"	52"	30"	STUB	2" SCH 40
N10	2" NPS	SEAMLESS SA-312-TP316 w/ 0.030% max. C	SCH 80		INLET	303"	50"	34"	STUB	2" SCH 40
N11	2" NPS	SEAMLESS SA-312-TP316 w/ 0.030% max. C	SCH 80		INLET/AIR PURGE	303"	48"	45"	STUB	2" SCH 40
N12	2" OD	MACHINED SA-182-F316 w/ 0.030% max. C	SPCL		AIR/VAC TO UFP-VSL-00094 (4)	291½"	56½"	72"	STUB	1" SCH 40
N13	2" OD	MACHINED SA-182-F316 w/ 0.030% max. C	SPCL		OUTLET/SAMPLE (UFP-RFD-00030) (4)	306½"	31½"	30"	STUB	1" SCH 40
N14	2" NPS	SEAMLESS SA-312-TP316 w/ 0.030% max. C	SCH 80		SAMPLE RETURN (4)	304"	44"	34"	STUB	2" SCH 40
N16	2" NPS	SEAMLESS SA-312-TP316 w/ 0.030% max. C	SCH 160		AIR/VAC TO UFP-PJM-00016	248"	45"	60"	STUB	2" SCH 40
N17	2" NPS	SEAMLESS SA-312-TP316 w/ 0.030% max. C	SCH 160		OUTLET TO EJECTOR	NA	NA	NA	STUB	2" SCH 40
N18	2" NPS	SEAMLESS SA-312-TP316 w/ 0.030% max. C	SCH 160		AIR/VAC TO UFP-PJM-00019	303"	48"	45"	STUB	2" SCH 40
N19	2" NPS	SEAMLESS SA-312-TP316 w/ 0.030% max. C	SCH 160		AIR/VAC TO UFP-PJM-00020 (4)	297½"	42½"	60"	STUB	2" SCH 40
N20	2" NPS	SEAMLESS SA-312-TP316 w/ 0.030% max. C	SCH 160		AIR/VAC TO UFP-PJM-00021	303"	48"	45"	STUB	2" SCH 40
N21	2" NPS	SEAMLESS SA-312-TP316 w/ 0.030% max. C	SCH 160		AIR/VAC TO PWD-PJM-00022	248"	45"	60"	STUB	2" SCH 40
N22	6" NPS	SEAMLESS SA-312-TP316 w/ 0.030% max. C	SCH 80		OUTLET/VESSEL VENT (4)	310¼"	55¼"	CENTER	STUB	6" SCH 10
N23	3" NPS	SEAMLESS SA-312-TP316 w/ 0.030% max. C	SCH 80		AIR/VAC TO UFP-VSL-00052	245"	38"	64"	STUB	3" SCH 40
N24	3" NPS	SEAMLESS SA-312-TP316 w/ 0.030% max. C	SCH 80		AIR/VAC TO UFP-VSL-00053 (4)	240⅞"	55⅞"	72"	STUB	3" SCH 40
N25	3" NPS	SEAMLESS SA-312-TP316 w/ 0.030% max. C	SCH 80		AIR/VAC TO UFP-VSL-00072 (4)	240⅞"	55⅞"	72"	STUB	3" SCH 40
N26	3" NPS	SEAMLESS SA-312-TP316 w/ 0.030% max. C	SCH 80		AIR/VAC TO UFP-VSL-00073 (4)	242⅞"	57⅞"	64"	STUB	3" SCH 40
N28	4" NPS	~~SEAMLESS SA-312-TP316 w/ 0.030% max. C~~	~~SCH 80~~	*SCH 160*	OUTLET FROM UFP-RFD-00037 (4)	307⅞"	52⅞"	18"	STUB	4" SCH 40
N29	4" NPS	SEAMLESS SA-312-TP316 w/ 0.030% max. C	SCH 80		OUTLET FROM UFP-RFD-00038 (4)	307⅞"	52⅞"	12"	STUB	4" SCH 40
N30	4" NPS	SEAMLESS SA-312-TP316 w/ 0.030% max. C	SCH 80		OUTLET FROM UFP-RFD-00028 (4)	307⅞"	52⅞"	16"	STUB	4" SCH 40
N32	4" NPS	~~SEAMLESS SA-312-TP316 w/ 0.030% max. C~~	~~SCH 80~~	*SCH 160*	OUTLET FROM UFP-RFD-00027 (4)	307⅞"	52⅞"	18"	STUB	4" SCH 40
N34	2" NPS	SEAMLESS SA-312-TP316 w/ 0.030% max. C	SCH 80		INLET TO WASH RING	245"	38"	70"	STUB	2" SCH 40
N35	2" NPS	SEAMLESS SA-312-TP316 w/ 0.030% max. C	SCH 80		INLET TO WASH RING (4)	292½"	37½"	70"	STUB	2" SCH 40
N36	2" NPS	SEAMLESS SA-312-TP316 w/ 0.030% max. C	SCH 80		INLET TO WASH RING (4)	292½"	37½"	70"	STUB	2" SCH 40
N37	6" NPS	SEAMLESS SA-312-TP316 w/ 0.030% max. C	SCH 80		OUTLET/OVERFLOW	NA	NA	NA	STUB	6" SCH 10
N38	2" NPS	~~SEAMLESS SA-312-TP316 w/ 0.030% max. C~~	~~SCH 80~~	*SCH 160*	SPARE (4)	307½"	52½"	16"	STUB	CAPPED
N39	24" OD	WELDED SA-240-316 w/ 0.030% max. C	⅜"		MANWAY (TACKED CAP)	300"	45"	60"	STUB	CAPPED
N40	3" NPS	SEAMLESS SA-312-TP316 w/ 0.030% max. C	SCH 80		SPARE (4)	306⅝"	51⅝"	30"	STUB	3" SCH 40
N41	2" NPS	SEAMLESS SA-312-TP316 w/ 0.030% max. C	SCH 160		AIR/VAC TO UFP-PJM-00052 (4)	302½"	47½"	45"	STUB	2" SCH 40
N44	4" NPS	~~SEAMLESS SA-312-TP316 w/ 0.030% max. C~~	~~SCH 80~~	*SCH 160*	OUTLET FROM UFP-RFD-00044	309"	54"	12"	STUB	4" SCH 40
N43	3" NPS	SEAMLESS SA-312-TP316 w/ 0.030% max. C	SCH 80		AIR/VAC TO UFP-VSL-00082 (4)	293½"	38½"	64"	STUB	3" SCH 40
N46	2" NPS	SEAMLESS SA-312-TP316 w/ 0.030% max. C	SCH 80		FORCED AIR PURGE (4)	304⅞"	44⅞"	54"	STUB	2" SCH 40

(2) GENERAL NOTES and SPECIAL REQUIREMENTS

1. NWC Quality Assurance Manual ASME NQA-1 applies in its entirety for this project.
2. All material, including weld wire, for this project shall be purchased from approved Level 3 & 4 suppliers.
3. All 316SS material, including weld wire, shall be PMI tested and approved prior to use.
4. No deviation from this drawing is allowed without Bechtel approval.
5. The base of the vessel support skirt shall be marked, using a line of welding bead, at the 0° orientation as shown on the drawing. Trial fit assembly required for markup. Skirt base to be suitably reinforced prior to shipment.
6. A datum line shall be marked on the heads with low stress stamping 2" away from the head/shell seam.
7. Contact materials shall be approved prior to use. This is to include marking material, lubricants, tape, anti-spatter spray, harmful metals or salts such as zinc, lead, or copper, etc. Total halogens in the contact materials shall be less than 200 ppm.
8. Fabrication tolerance shall be in accordance with Bechtel drawing Pressure Vessel Tolerances Standard Details DWG. # 24590-WTP-MV-M59T-00001. *DELETE AND REPLACE, BY RPP-WTP*
9. Plate 3/8" and over in thickness shall not be sheared to size. All lubricants, burrs, and debris shall be removed after cutting.
10. Internal piping bends shall have a center line radius of four times the pipe nominal diameter. A pipe shall not be terminated or butt-welded within 4" of the bend.
11. Longitudinal seams shall be completed and have successfully passed any NDE prior to welding any adjoining circumferential seams.
12. Manway cover head shall be prepared for field welding, tacked into place with 4 @ ½" long tacks 90° apart, sealed to prevent dirt and water entry, and marked with the item number.
13. Nozzles shall be prepared for field welding, shall be covered with a hard rubber or plastic cap, and shall be sealed to prevent dirt or water entry.
14. All attachments e.g. lugs, brackets, nozzles and other members shall follow the contour of the surface to which they will be attached. The gap at the exposed edges shall not exceed 1/16" prior to welding.
15. All attachments that use only fillet welds shall have a maximum gap of 1/8" between the components being joined.
16. All temporary attachments shall be 316 stainless steel.
17. All temporary attachments shall be removed prior to hydrostatic test.
18. PMI to be performed on all pressure retaining items including welds after fabrication.

UT per ASME Section VIII Div. I Appendix 12 (4)

1. The shell and head sections under the lifting lugs, tailing lugs, and internal vessel supports shall be ultrasonically examined over 100% of the area that extends 5" beyond each side of the perimeter of the proposed fillet weld attachment to the shell or head.
2. All welds attaching internal or external components to the shell or heads shall be ultrasonically examined. This examination does not include nozzle to vessel wall welds.
3. All shell and head sections for 3" around nozzle penetrations shall be ultrasonically examined prior to welding.
4. All nozzle welds to the shell or head with internal projection shall be ultrasonically examined.

PT per ASME Section VIII Div. I Appendix 8 (1A) (3) (4)

1. All welds over 3/4" in 304 & 316 series Stainless Steel shall be dye penetrant examined.

CHANGE TO UW-51 BY RPP-WTP

RT per ASME Section VIII Div. I ~~Appendix 4~~ (1A) (3) (4)

1. All butt welds in the shell shall be 100% radiographically examined.
2. All nozzle welds to the shell or head without internal projection shall be radiographically examined.
3. Butt welds in internal piping shall be radiographically examined. ~~This does not include internal pipe supports and braces.~~ *DELETED BY RPP-WTP*
4. All butt welds in the nozzle necks shall be radiographically examined.
5. All thermowell socket welds shall be radiographically examined.

OPERATING: 512,285 lbs
FULL WATER: 401,100 lbs
EMPTY: 103,000 lbs
BY RPP-WTP

Helium Leak Test

1. All thermowell socket welds shall be helium leak tested.

PLANT ITEM NO.: UFP-VSL-00062A

REVISIONS

NO	DESCRIPTION	REV BY	APD BY	DATE
5	UPDATED RADIOGRAPH SPEC. REFERENCE	SMT	MJV	12/06/04
4	REVISED PER CUSTOMER COMMENTS & ENGINEERING CHANGES	SMT	MJV	11/05/04
3	REVISED PER CUSTOMER COMMENTS & ENGINEERING CHANGES	SMT	MJV	06/07/04
2	REVISED PER CUSTOMER COMMENTS & ENGINEERING CHANGES	MDH	MJV	04/08/03
1A	REVISED PER CUSTOMER COMMENTS & ENGINEERING CHANGES	MDH	MJV	07/06/03
1	REVISED PER CUSTOMER COMMENTS & ENGINEERING CHANGES	MJV	MDH	04/28/03

24590-PTF-MV-UFP-VSL-00062 A
Bechtel National, Inc. SUPPLIER DOCUMENT STATUS
1. [X] Work may proceed.
2. [ ] Revise and resubmit. Work may proceed subject to resolution of indicated comments.
3. [ ] Revise and resubmit. Work may not proceed.
4. [ ] Review not required. Work may proceed.
REVIEWED: M MJL
Q-321 Document Category: 1.1
Accepted by: H. KHURANA 01/13/05

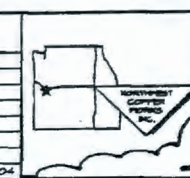

ESTIMATED WEIGHT, (IN LBS): OPERATING - ~~[illegible]~~ FULL WATER - ~~[illegible]~~ EMPTY - ~~[illegible]~~

NORTHWEST COPPER WORKS, INC.
1303 N. RIVER STREET * PORTLAND, OREGON * 97227

180" I.D. ULTRAFILTER PERMEATE COLLECTION VESSEL

BECHTEL NATIONAL INC. 3000 George Washington Way Richland, Washington 99352		EQUIP. NO. UFP-VSL-00062A
		P.O. NO. 24590-QL-POD-MVA0-00003 REV 0
SCALE: AS NOTED	JOB NO. 3005	DWG. NO. D- 3005 REV 5
DATE: 01/17/03	CHKD. BY: KRT	
DWN. BY: MDH	APPD. BY: MDH	SHT. NO. 1 OF 8

BECHTEL NATIONAL INC. FOR D.O.E. RIVER PROTECTION PROJECT IN RICHLAND, WA ~~[illegible]~~ BECHTEL DOC. 24590-QL-POD-MVA0-00001-05-01 REV 00F *DELETED BY RPP-WTP*

\Swap\ACAD\03\D3005-5 PRELIM Mon Dec 06 09:41:55 2004

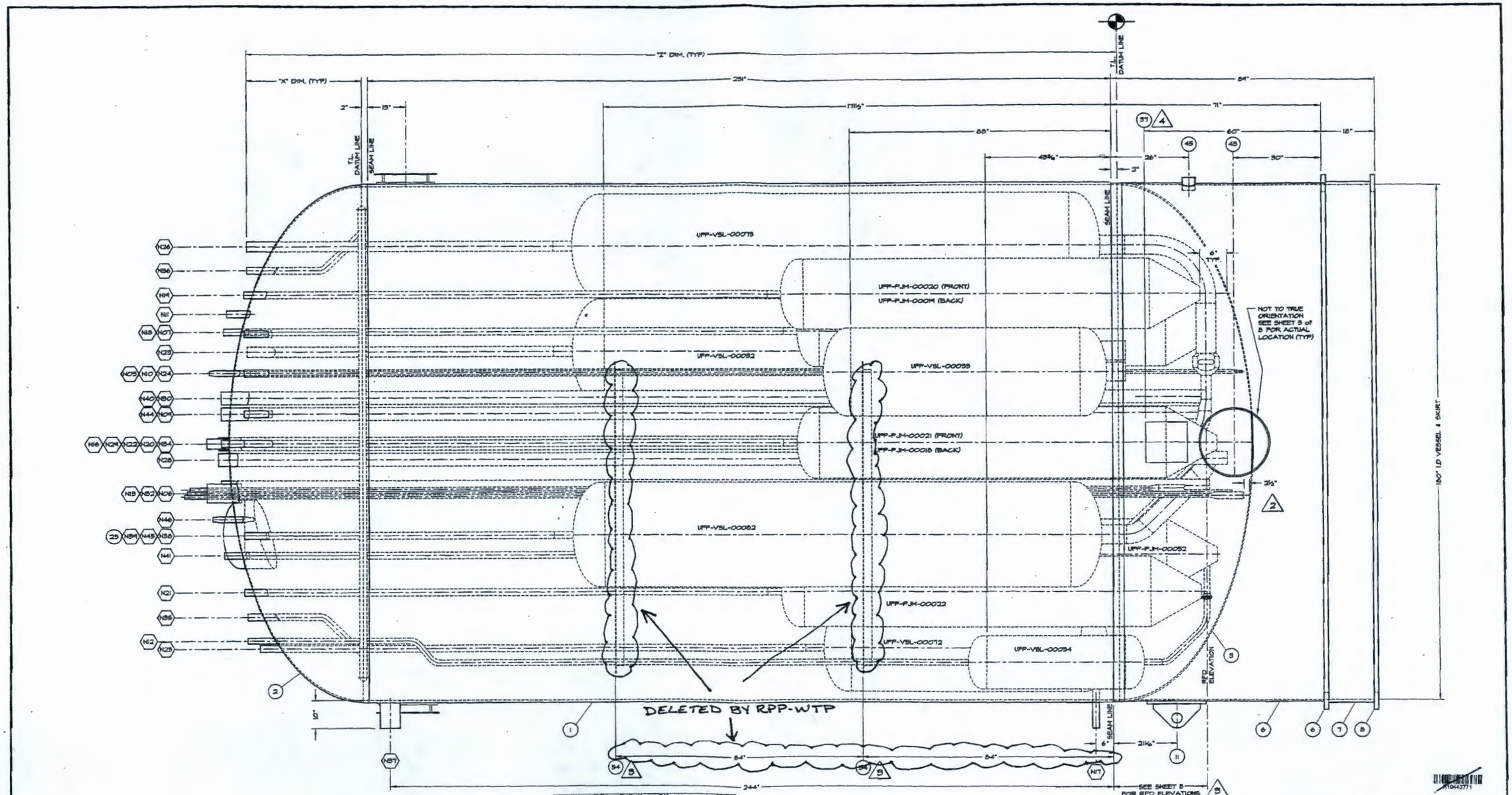

24590-PTF-MV-UFP-VSL-00062A

Bechtel National, Inc. Job No. 24590

SUPPLIER DOCUMENT STATUS

1. [X] Work may proceed.
2. [ ] Review and resubmit. Work may proceed subject to resolution of indicated comments.
3. [ ] Review and resubmit. Work may not proceed.
4. [ ] Review not required. Work may proceed.

Permission to proceed does not constitute acceptance or approval of design details, calculations, analyses, test methods, or materials developed or selected by the supplier and does not relieve supplier from full compliance with contractual obligations.

REVIEWED: M. M.K.

G-321 Document Category: 1.1 (From Supplement A to G-321-S, (S) or G-321-V (V), as applicable, or "N/A" if SSRS is used)

Supplier DAE Document No. (When applicable) Rev.

Accepted by: H. KHURANA Date: 01/13/05

Reviewed by: (When applicable) Interface Signature Date

REVISIONS				
5	NO CHANGES	SMT	MJV	12/06/04
4	ADDED NAMEPLATE ELEVATION	SMT	MJV	11/05/04
3	REVISED PER CUSTOMER COMMENTS AND ENGINEERING CHANGES	SMT	MJV	06/07/04
2	REVISED PER CUSTOMER COMMENTS AND ENGINEERING CHANGES	MDH	MJV	04/08/03
1A	REVISED PER CUSTOMER COMMENTS AND ENGINEERING CHANGES	MDH	MJV	07/18/03
1	REVISED PER CUSTOMER COMMENTS & ENGINEERING CHANGES	MJV	MDH	04/28/03
NO	DESCRIPTION	REV BY	APD BY	DATE

NORTHWEST COPPER WORKS, INC.
1503 N. RIVER STREET • PORTLAND, OREGON • 97227

180" I.D. ULTRAFILTER
PERMEATE COLLECTION VESSEL ELEVATION

BECHTEL NATIONAL INC.
3000 George Washington Way
Richland, Washington 99352

SCALE 3/8" = 1'-0"	JOB NO. 3005	DWG. NO. D- 3005	REV 5
DATE 01/7/03	CHKD. BY KRT		
DWN. BY MDH	APPD. BY MDH	SHT. NO. 2 OF 8	

BCI/IP. NO. UFP-VSL-00062A
P.D. NO. 24590-2-POD-MVAO-00001 REV 0

~~REF. DWG 24590-PTF-MV-UFP-00065 REV 0~~
BECHTEL DOC. 24590-QL-POD-MVAO-00001-03-02 REV. 0

DELETED BY RPP-WTP

10/06/2004 PRELIM Mon Dec 06 09:41:45 2004

REMOVE ITEMS 54 AND 55. NOTE: PIPE LUGS ARE TO REMAIN IN PLACE. BY RPP-WTP

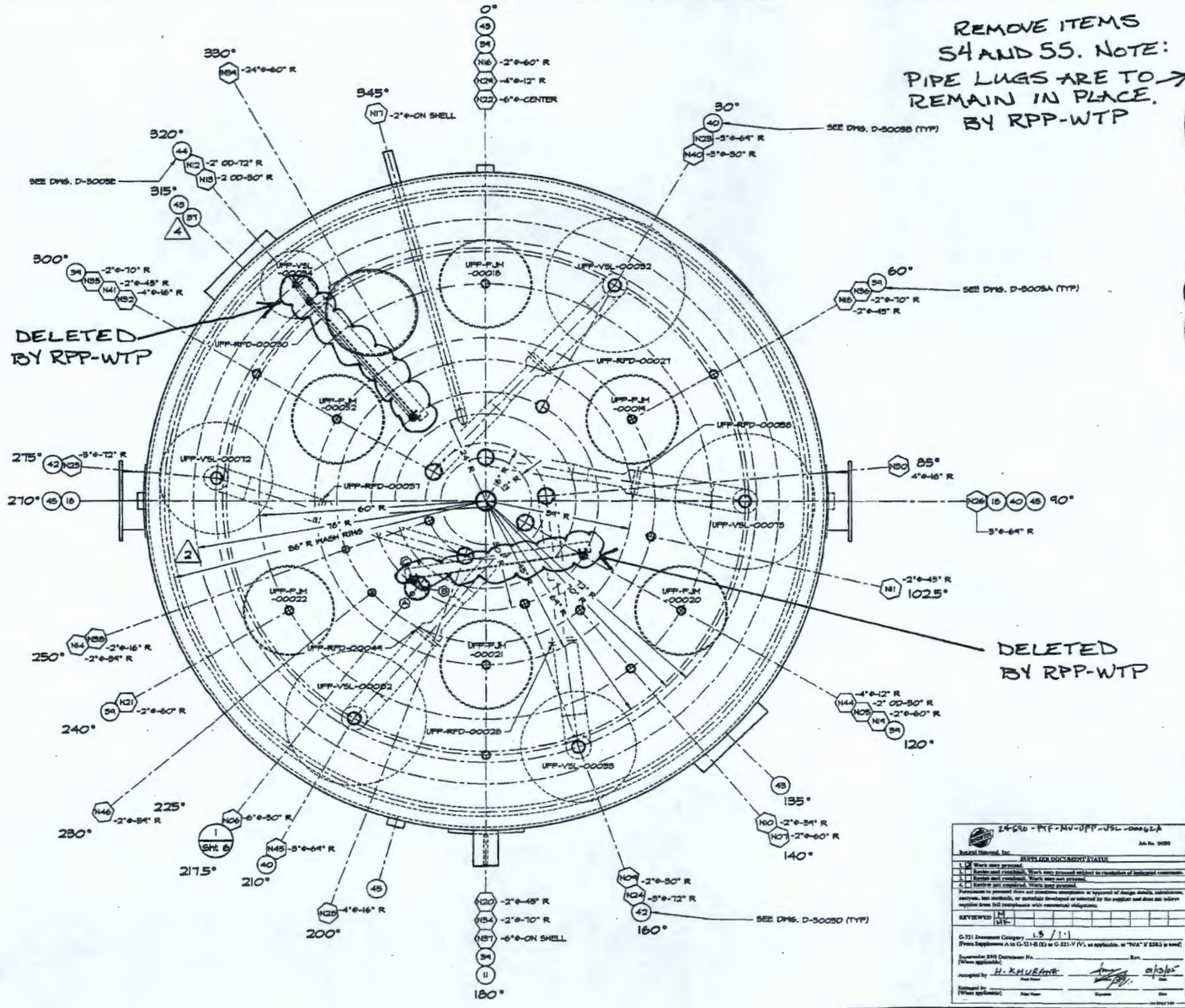

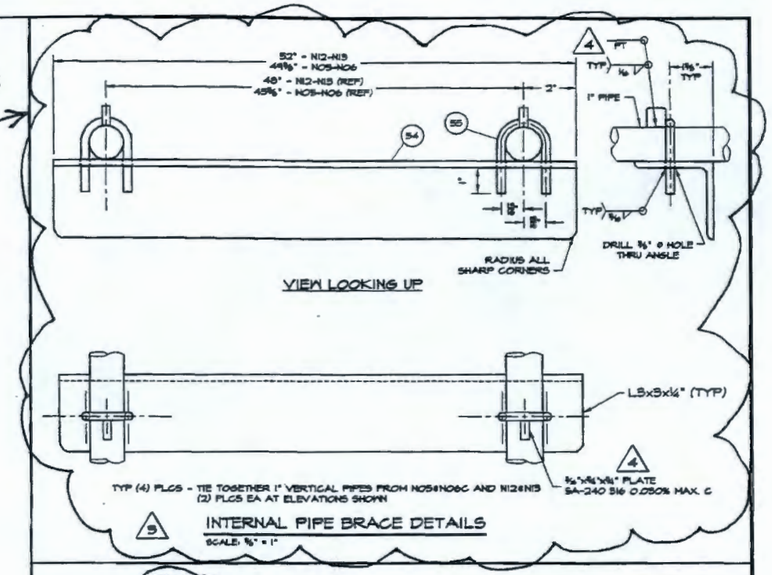

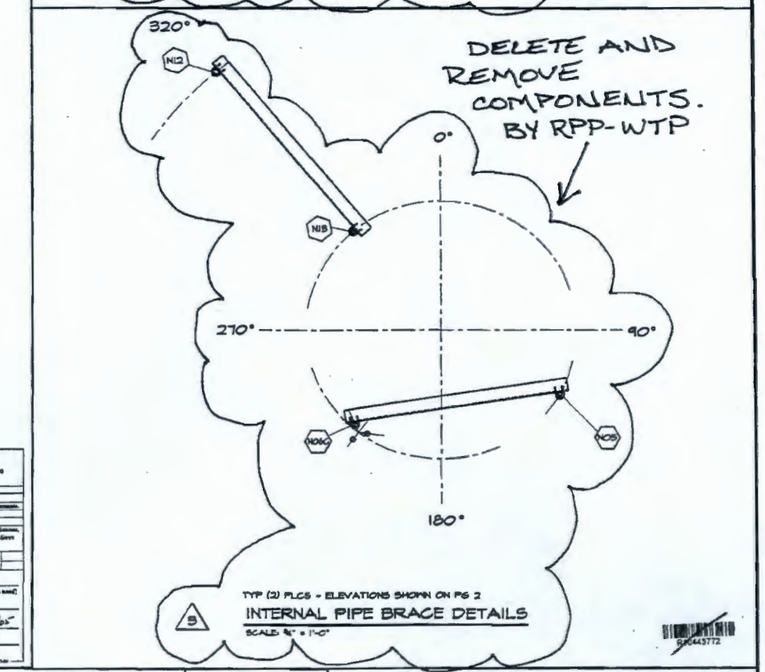

24590-PTF-MV-UFP-VSL-00062A

Job No. 24590

Bechtel National, Inc.

SUPPLIER DOCUMENT STATUS

1. [X] Work may proceed.
2. [ ] Revise and resubmit. Work may proceed subject to resolution of indicated comments.
3. [ ] Revise and resubmit. Work may not proceed.
4. [ ] Review not required. Work may proceed.

Permission to proceed does not constitute acceptance or approval of design details, calculations, analyses, test methods, or materials developed or selected by the supplier and does not relieve supplier from full compliance with contractual obligations.

REVIEWED BY: M MYC

G-321 Document Category 1.5 / 1-1
(From Supplement A to G-321-I-E (E) or G-321-V (V), as applicable, or "N/A" if ESRLS is used)

Supervisor BNI Document No. _____ Rev. _____
(When applicable)

Accepted by H. KHURANA 01/31/05
Print Name Signature Date

Submitted by _____
(When applicable) Print Name Signature Date

VESSEL ORIENTATION
SCALE: 3/8" = 1'-0"

REVISIONS

NO	DESCRIPTION	REV BY	APD BY	DATE
9	NO CHANGES	SHT	HJV	12/06/04
4	REVISED PER CUSTOMER COMMENTS & ENGINEERING CHANGES	SHT	HJV	11/05/04
3	REVISED PER CUSTOMER COMMENTS & ENGINEERING CHANGES	SHT	HJV	08/07/04
2	REVISED PER CUSTOMER COMMENTS & ENGINEERING CHANGES	MDH	HJV	04/05/03
1A	REVISED PER CUSTOMER COMMENTS & ENGINEERING CHANGES	MDH	HJV	07/15/03
1	REVISED PER CUSTOMER COMMENTS & ENGINEERING CHANGES	HJV	MDH	04/28/03

NORTHWEST COPPER WORKS, INC.
1505 N. RIVER STREET • PORTLAND, OREGON • 97227

180" I.D. ULTRAFILTER PERMEATE COLLECTION VESSEL PLAN

BECHTEL NATIONAL INC.
3000 George Washington Way
Richland, Washington 99352

EQUIP. NO.	UFP-VSL-00062A		
P.O. NO.	24590-QL-POD-MVAD-00001-03-05 REV 0		
SCALE 3/8" = 1'-0"	JOB NO. 3005	DWG. NO. D- 3005	REV 5
DATE 01/11/05	CHKD. BY KRT		
DWN. BY MDH	APPD. BY MDH	SHT. NO. 3 OF 8	

REF. DWG 24590-PTF-MV-UFP-VSL-00062B REV 0 pdc 12/09/04
BECHTEL DOC. 24590-QL-POD-MVAD-00001-03-05 REV. 00E F
DELETED BY RPP-WTP

P:\Seep\ACAD\03\D3005-5 PRELIM Mon Dec 06 09:41:35 2004

F:\Swap\ACAD\03\D3005F-2.dwg, 6/7/2004 1:08:01 PM

DELETED BY RPP-WTP

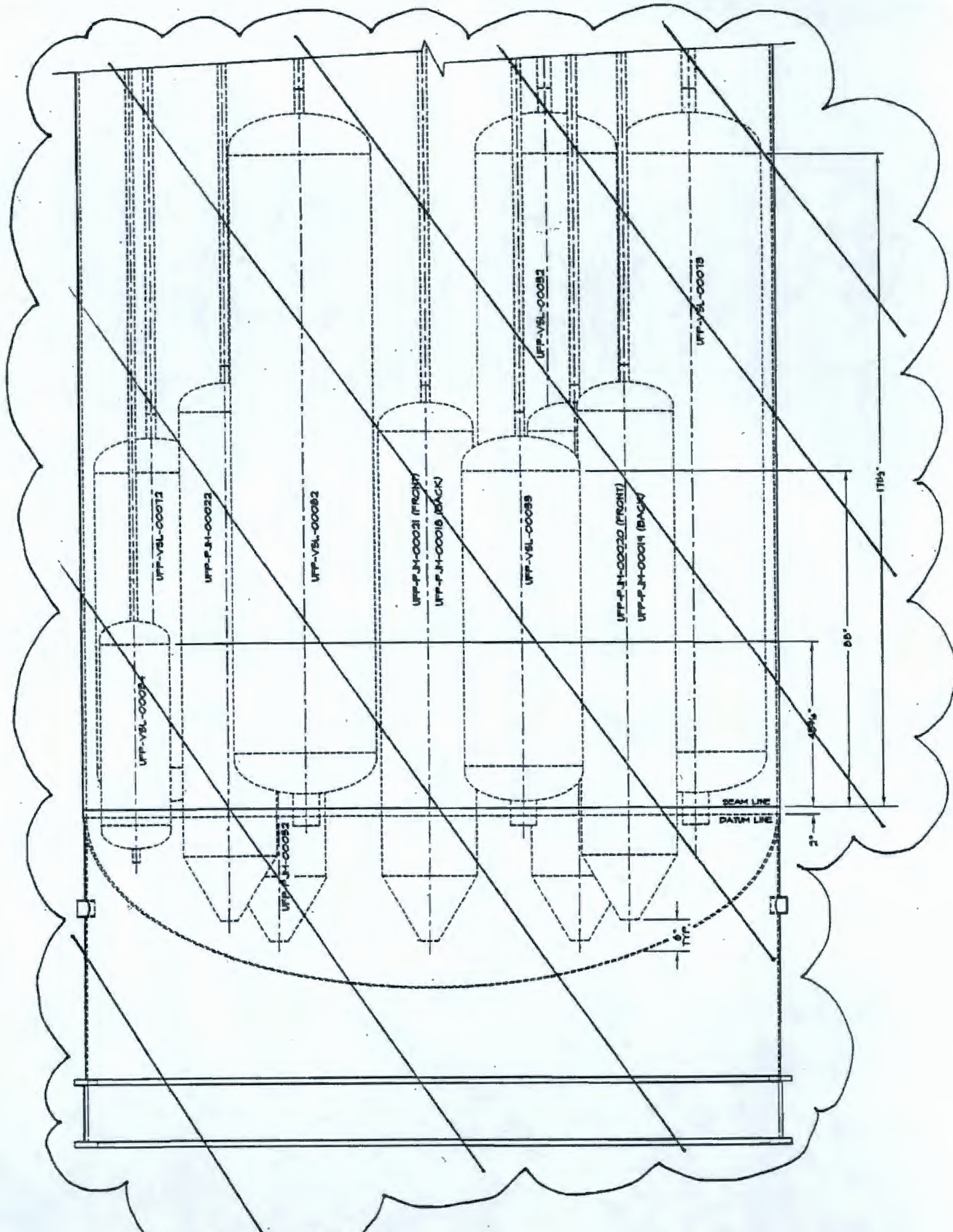

ELEVATION

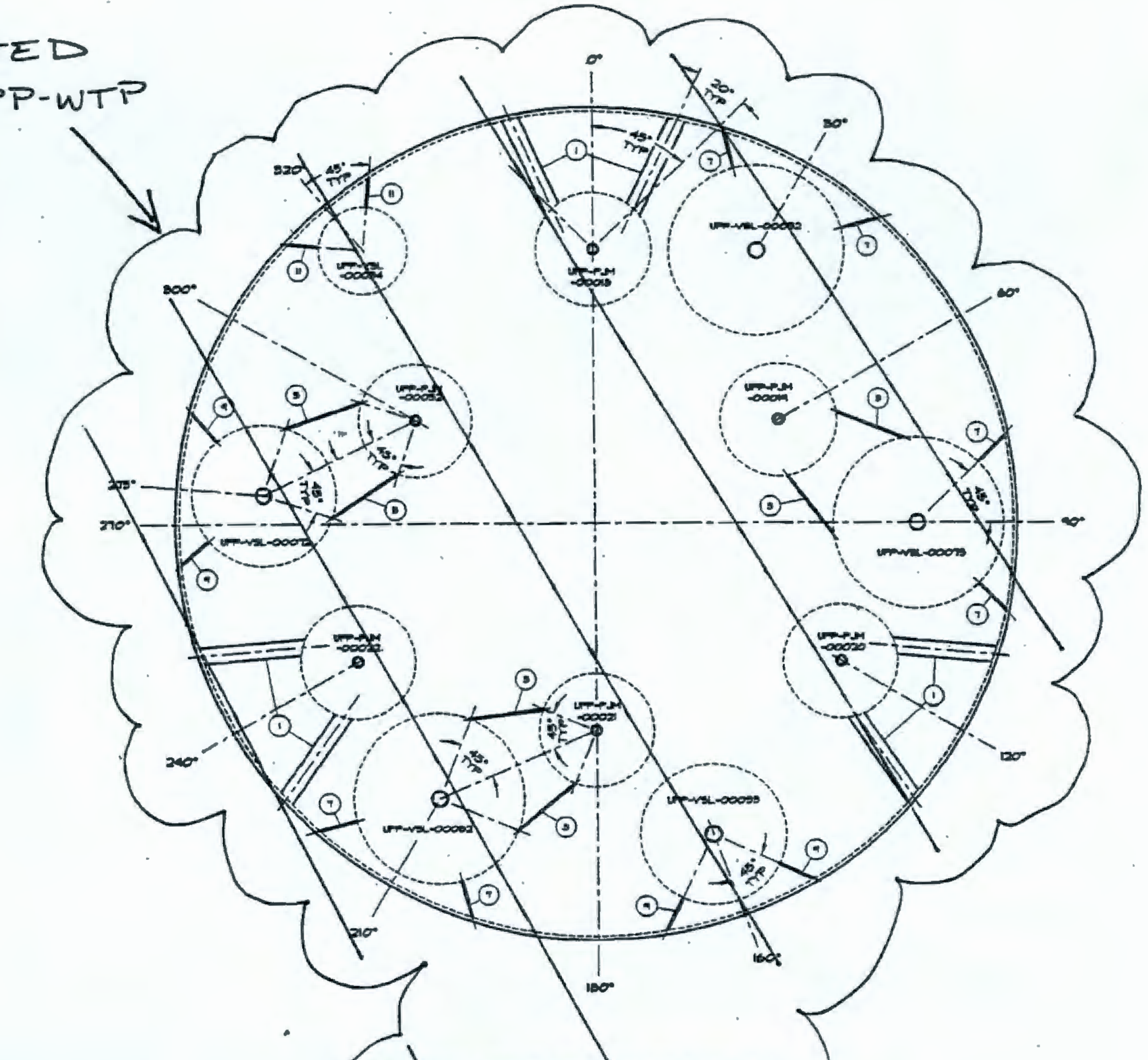

INTERNAL VESSEL SUPPORT ORIENTATION

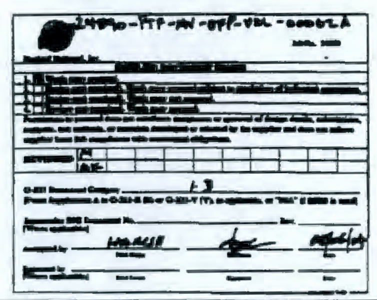

Some information on page this may appear to be illegible, however, the information necessary is legible.

BILL OF MATERIALS

MK	THICK/SIZE	MATERIAL	HEAT NO.	DESCRIPTION	QTY
1	4" SCH 40	WELDED SA-312-TP316 w/ 0.030% max. C		OUTER PULSE JET MIXER SUPPORT PIPE	12
2					
3	½"	SA-240-316 w/ 0.030% max. C		INNER PULSE JET MIXER SUPPORT PLATE (@ 36" CV)	8
4					
5	½"	SA-240-316 w/ 0.030% max. C		INNER PULSE JET MIXER SUPPORT PLATE (@ 30" CV)	4
6					
7	½"	SA-240-316 w/ 0.030% max. C		36" CHARGE VESSEL SUPPORT PLATE	12
8					
9	½"	SA-240-316 w/ 0.030% max. C		30" CHARGE VESSEL SUPPORT PLATE	4
10					
11	½"	SA-240-316 w/ 0.030% max. C		18" CHARGE VESSEL SUPPORT PLATE	2

CONSTRUCTION NOTES

NOTE 2: WHERE PLATE MATERIAL IS SPECIFIED AS ASME SA240, ASME SA479 MATERIAL MAY BE SUBSTITUTED.

→ ADD NOTE, BY RPP-WTP

REVISIONS

NO	DESCRIPTION	REV BY	APD BY	DATE
2	REVISED PER ENGINEERING CHANGES	SHT	MDH	06/07/04
1	REVISED PER CUSTOMER COMMENTS	MJV	MDH	04/05/03

NORTHWEST COPPER WORKS, INC.
1505 N. RIVER STREET * PORTLAND, OREGON * 97227

180" I.D. ULTRAFILTER PERMEATE VESSEL INTERNAL SUPPORT

BECHTEL NATIONAL INC.
3000 George Washington Way
Richland, Washington 99352

EQUIP. NO. UFP-VSL-00062A	P.O. NO. 24590-QL-POD-MVAO-00001 REV 0	
SCALE AS NOTED	JOB NO. 3005F	DWG. NO. D-3005F
DATE 08/06/03	CHKD. BY MDH	REV 2
DWN. BY MJV	APPD. BY MJV	SHT. NO. 1 OF 2

BECHTEL DOC. No. 24590-QL-POD-MVAO-00001-03-40 REV. 00B

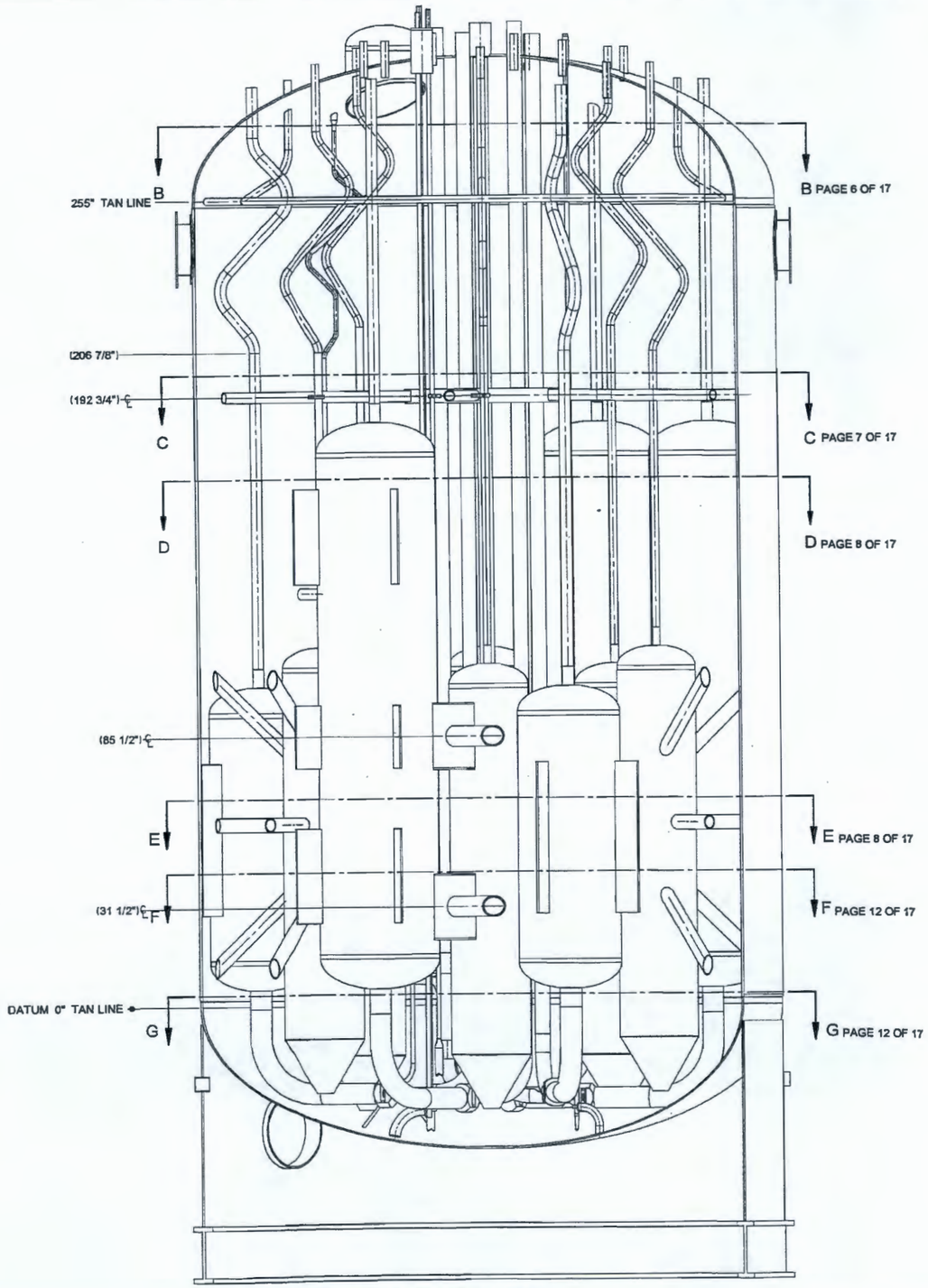

NORTH ELEVATION

BILL OF MATERIALS

MK	THICK/SIZE	MATERIAL	HEAT NO.	DESCRIPTION	QTY
12	3" SCHED 80S	SA 312 TP 316/316L 0.030% MAX C		SMLS PIPE, THERMAL EXPANSION S-BEND	2
13	2" SCHED 80S	SA 312 TP 316/316L 0.030% MAX C		SMLS PIPE, THERMAL EXPANSION S-BEND	6
14	1" SCHED 80S	SA 312 TP 316/316L 0.030% MAX C		SMLS PIPE, THERMAL EXPANSION S-BEND	1
15	4" SCHED 80S	SA 312 TP 316/316L 0.030% MAX C		SMLS PIPE, CENTER SUPPORT	1
16	3" SCHED 80S	SA 312 TP 316/316L 0.030% MAX C		SMLS PIPE, RADIAL SUPPORT	6
		NOT USED			
		NOT USED			
19	3/4"X 6 1/4"	SA 240 TP 316/316L 0.030% MAX C		PLATE, 4" GUIDE RING SUPPORT	2
20	3/4"X 6 1/4"	SA 240 TP 316/316L 0.030% MAX C		PLATE, 4" GUIDE RING SUPPORT	3
21	3/4"X 1"	SA 240 TP 316/316L 0.030% MAX C		PLATE, 4" GUIDE RING	15
22	1/2"X 1"	SA 240 TP 316/316L 0.030% MAX C		PLATE, 2" GUIDE RING	7
23	1"X 3 5/8"	SA 240 TP 316/316L 0.030% MAX C		PLATE, 2" GUIDE RING SUPPORT	3
24	1"X 3 5/8"	SA 240 TP 316/316L 0.030% MAX C		PLATE, 2" GUIDE RING SUPPORT	2
		NOT USED			
26	1"X 3 5/8"	SA 240 TP 316/316L 0.030% MAX C		PLATE, 2" GUIDE RING SUPPORT	1
		NOT USED			
28	1/2"X 2 1/2"	SA 240 TP 316/316L 0.030% MAX C		PLATE, 1" GUIDE RING SUPPORT	1
29	1/2"X 1"	SA 240 TP 316/316L 0.030% MAX C		PLATE, 1" GUIDE RING	13
30	1/2"X 2 1/2"	SA 240 TP 316/316L 0.030% MAX C		PLATE, 1" GUIDE RING SUPPORT	2
31	3" SCHED 80S	SA 240 TP 316/316L 0.030% MAX C		SMLS PIPE	3
32	1/2"	SA 240 TP 316/316L 0.030% MAX C		PLATE, Ø 3 1/2"	3
33	1"X 1"X 2 1/2"	SA 240 TP 316/316L 0.030% MAX C		PLATE	3
34	6" SCHED 80S	SA 312 TP 316/316L 0.030% MAX C		SMLS PIPE, KICKER SUPPORT	4
35	1/2" MIN	SA 240 TP 316/316L 0.030% MAX C		KICKER SUPPORT PLATE	8
36	4" SCHED 80S	SA 312 TP 316/316L 0.030% MAX C		SMLS PIPE, OUTER PJM SUPPORT	6
37	1/2" MIN	SA 240 TP 316/316L 0.030% MAX C		36" CHARGE VESSEL SUPPORT PLATE	4
38	2" SCHED 160S	SA 312 TP 316/316L 0.030% MAX C		SMLS PIPE	1
39	1/2"X 2 3/4"X 2 3/4"	SA 240 TP 316/316L 0.030% MAX C		PLATE	1
40	3" SCHED 160S	SA 312 TP 316/316L 0.030% MAX C		SMLS PIPE	1
41	1/2"X 3 7/8"X 3 7/8"	SA 240 TP 316/316L 0.030% MAX C		PLATE	1
42	6" SCHED 80S	SA 312 TP 316/316L 0.030% MAX C		SMLS PIPE, CENTER PJM SUPPORT	2
43	6" SCHED 80S	SA 312 TP 316/316L 0.030% MAX C		SMLS PIPE, CENTER PJM SUPPORT	4
44	4" SCHED 80S	SA 312 TP 316/316L 0.030% MAX C		SMLS PIPE, CENTER PJM SUPPORT	2
45	4" SCHED 80S	SA 312 TP 316/316L 0.030% MAX C		SMLS PIPE, CENTER PJM SUPPORT	2
46	4" SCHED 80S	SA 312 TP 316/316L 0.030% MAX C		SMLS PIPE, CENTER PJM SUPPORT	4
47	1"X 6 1/4"	SA 240 TP 316/316L 0.030% MAX C		PLATE, 4" GUIDE RING SUPPORT	2
48	1"X 6 1/4"	SA 240 TP 316/316L 0.030% MAX C		PLATE, 4" GUIDE RING SUPPORT	2
49	1"X 6 1/4"	SA 240 TP 316/316L 0.030% MAX C		PLATE, 4" GUIDE RING SUPPORT	4
50	1"X 6 1/4"	SA 240 TP 316/316L 0.030% MAX C		PLATE, 4" GUIDE RING SUPPORT	2
51	1"X 2 1/2"	SA 240 TP 316/316L 0.030% MAX C		PLATE, 1" GUIDE RING SUPPORT	1
52	1"X 2 1/2"	SA 240 TP 316/316L 0.030% MAX C		PLATE, 1" GUIDE RING SUPPORT	2
53	1"X 2 1/2"	SA 240 TP 316/316L 0.030% MAX C		PLATE, 1" GUIDE RING SUPPORT	2
54	1/2" MIN	SA 240 TP 316/316L 0.030% MAX C		KICKER SUPPORT PLATE	4
55	6" SCHED 80S	SA 312 TP 316/316L 0.030% MAX C		SMLS PIPE, KICKER SUPPORT PIPE	2

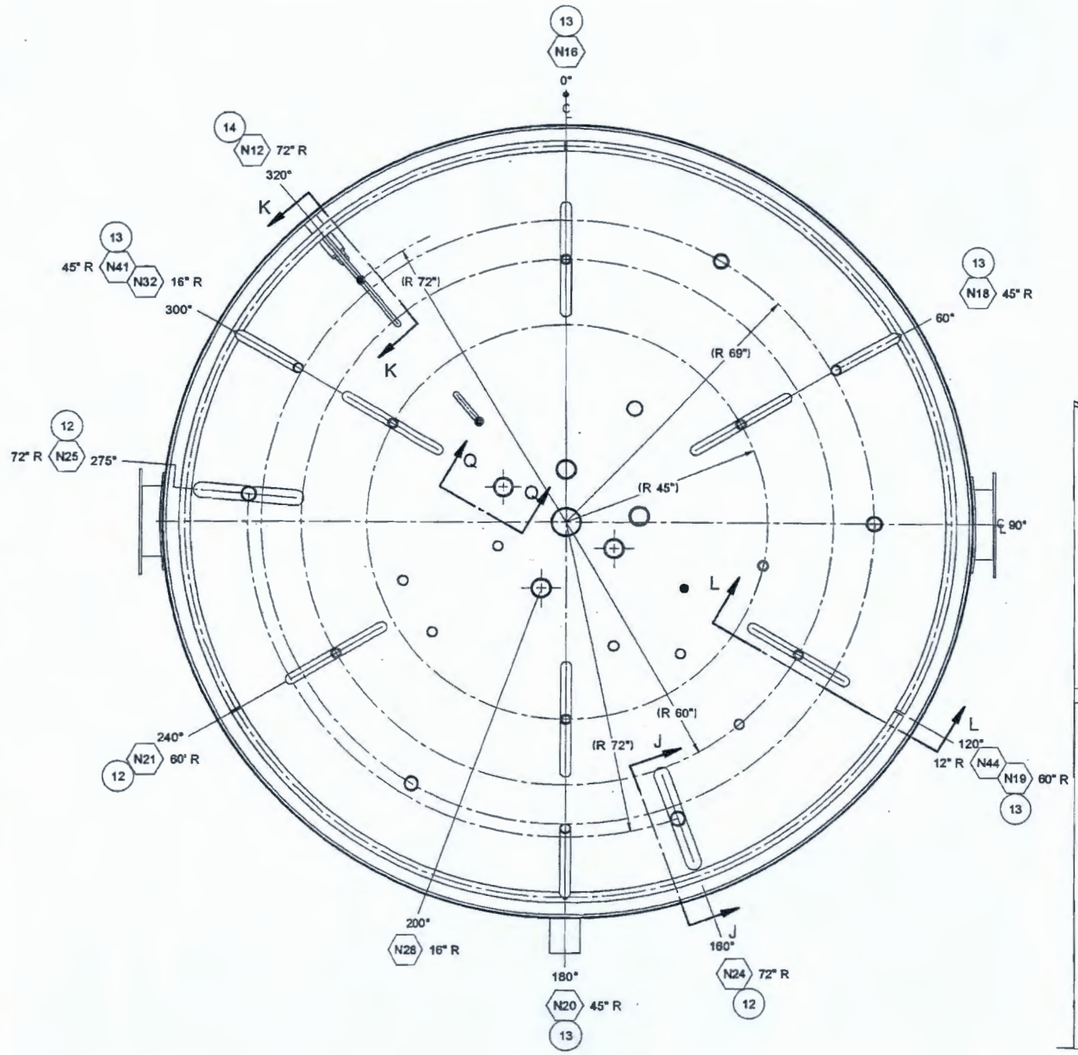

SECTION B-B
SCALE: 1/16

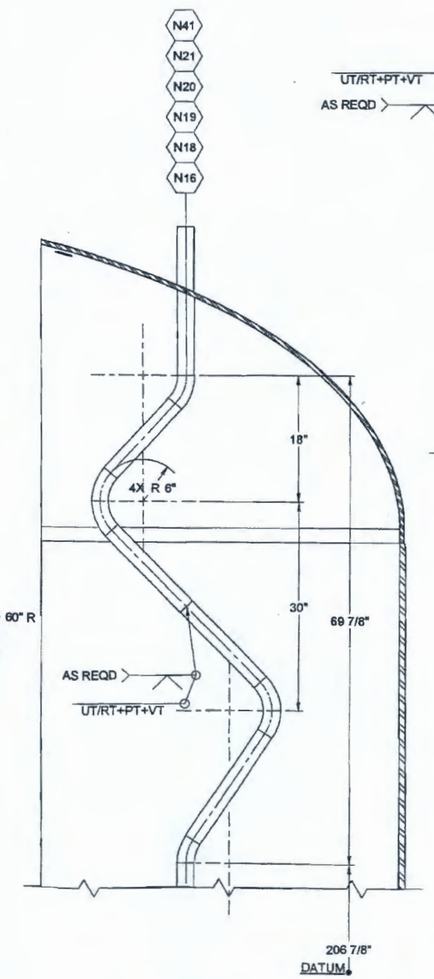

13 SECTION L-L
THERMAL EXPANSION S-BEND
SCALE: 1/10

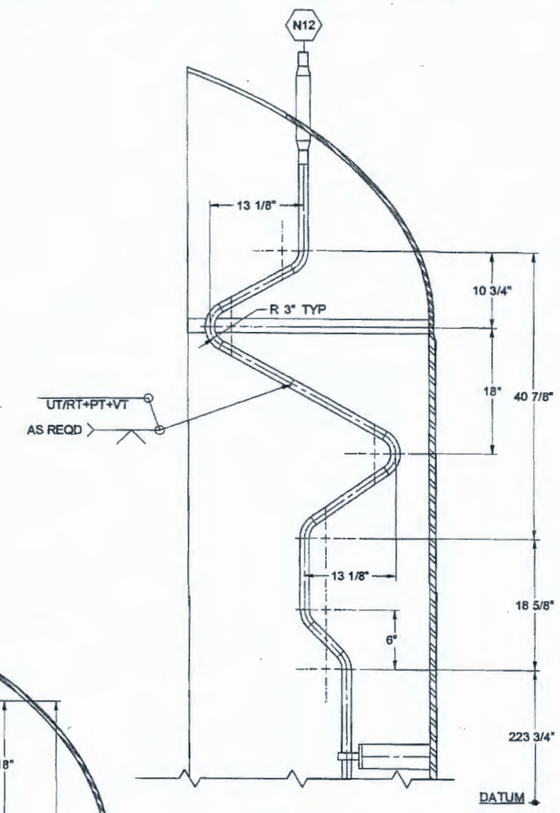

14 SECTION K-K
THERMAL EXPANSION S-BEND
SCALE: 1/10

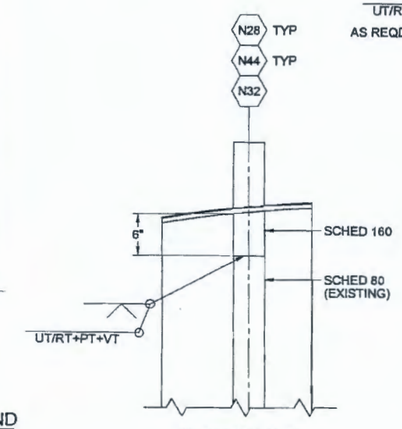

SECTION Q-Q
SCALE: 1/10

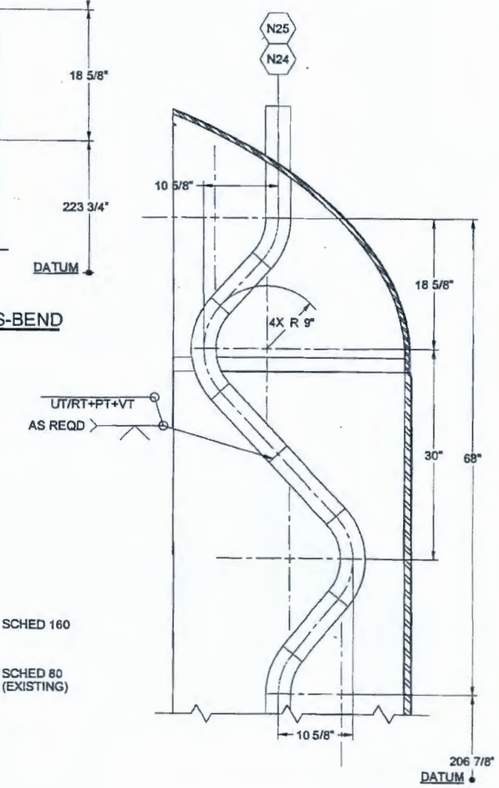

12 SECTION J-J
THERMAL EXPANSION S-BEND
SCALE: 1/10

NOTES:

1. GUIDE RINGS ARE WELDED AFTER CORRECTLY POSITIONING THE GUIDE RING SUPPORTS. GUIDE RINGS SHALL MAINTAIN .125 DIAMETRAL CLEARANCE WITH PIPE.

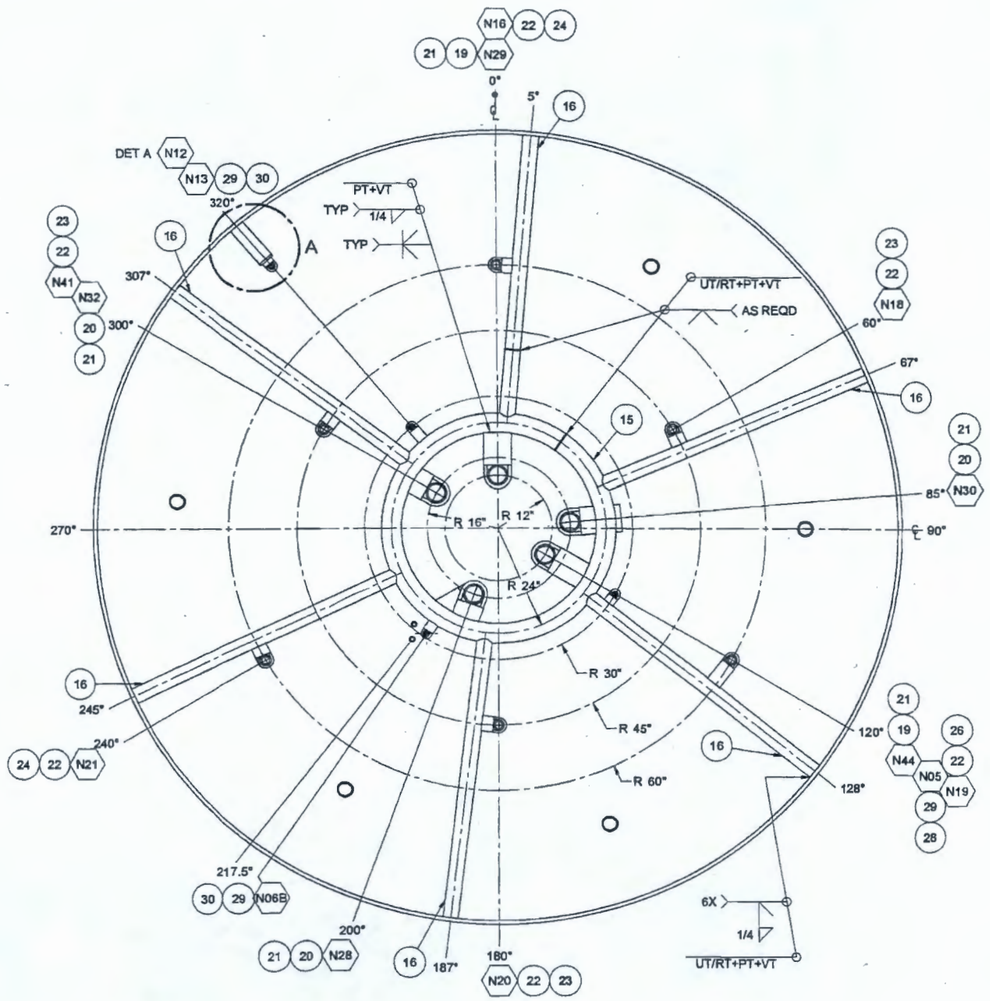

SECTION C-C
SCALE: 1/16

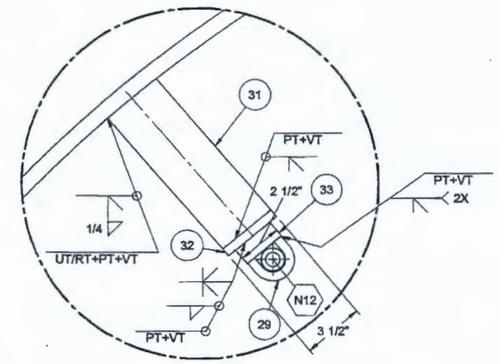

DETAIL-A
SCALE: 1/4

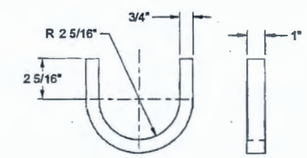

21 GUIDE RING
SCALE: 1/4

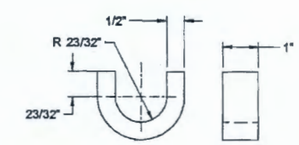

29 GUIDE RING
SCALE: 1/2

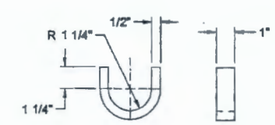

22 GUIDE RING
SCALE: 1/4

24590-PTF-VDCN-MS-10-00007

Attachment 1: Page 7 of 17

FORM D_MASTER 03/2003

SCREENING IS REQUIRED FOR DRAWING TYPES IDENTIFIED IN 24590-WTP-GPP-SPEG-002

'D' SIZE - 34x22
COMPUTER GENERATED - MANUAL DESIGN CHANGES NOT PERMITTED

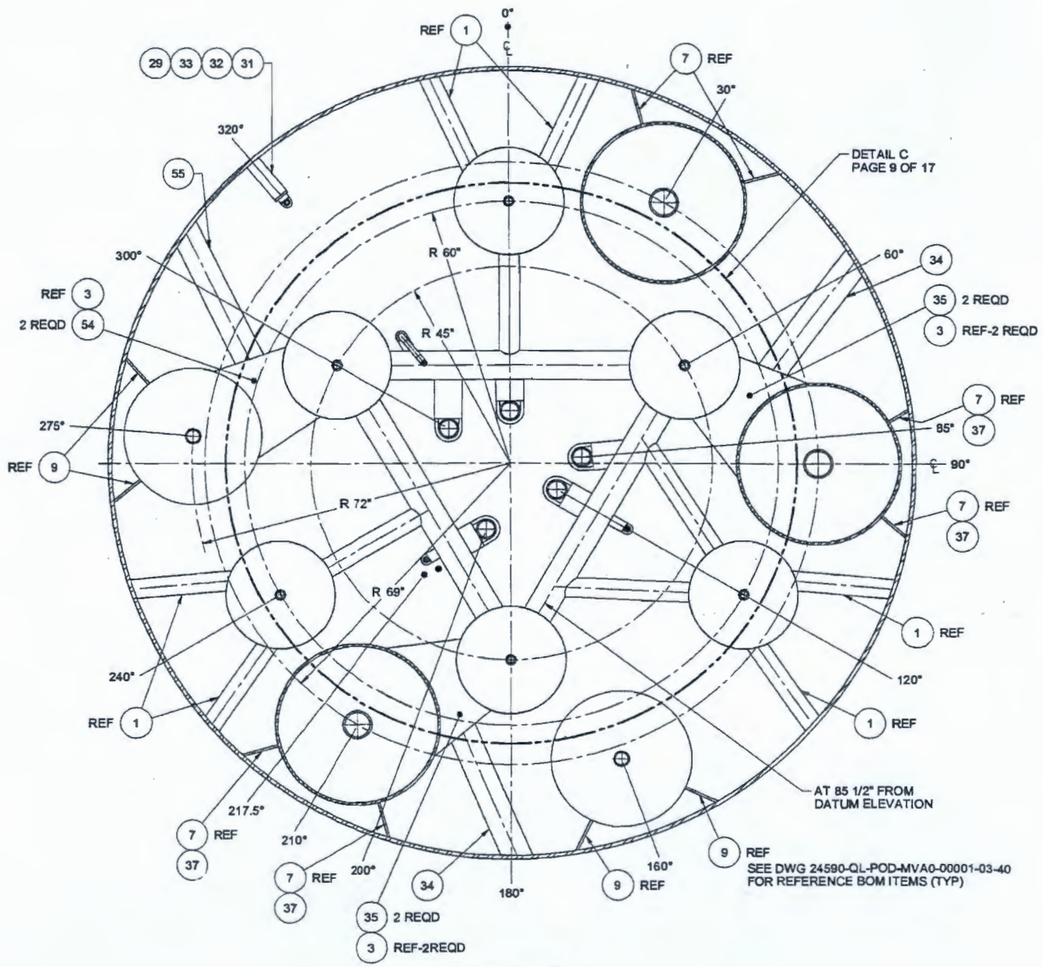

SECTION D-D
SCALE: 1/16

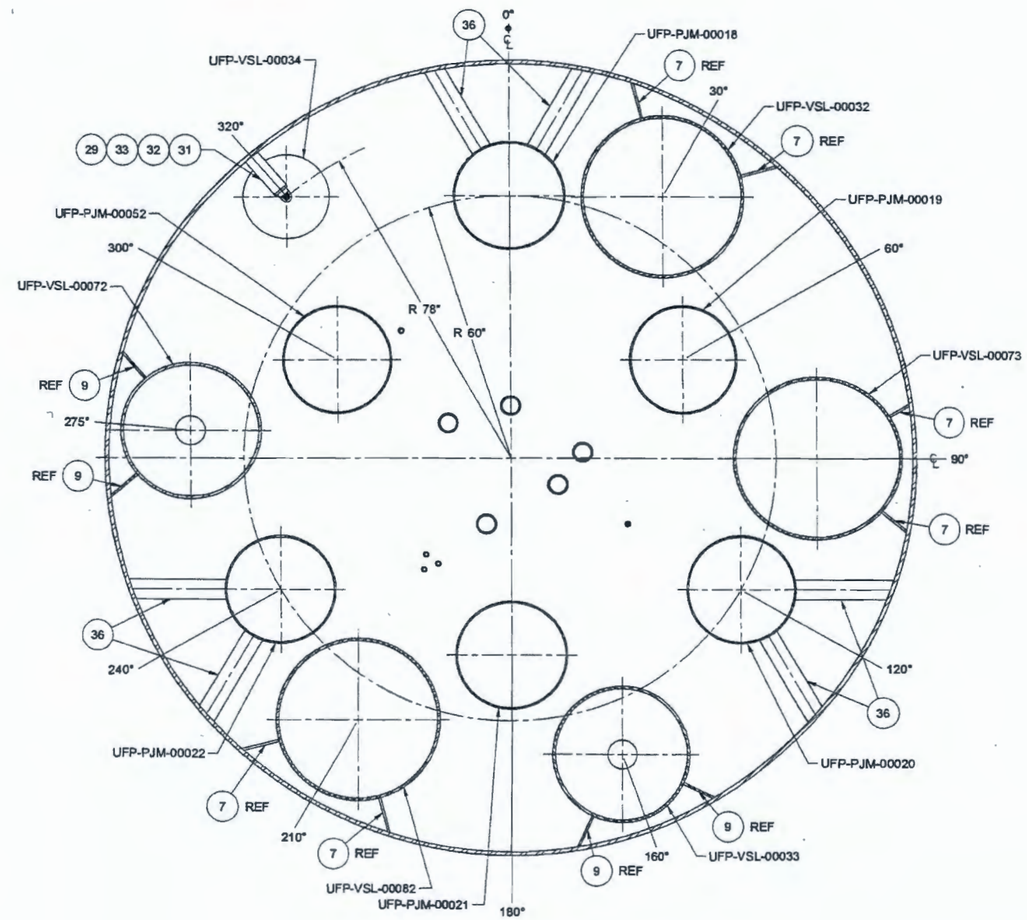

SECTION E-E
SCALE: 1/16

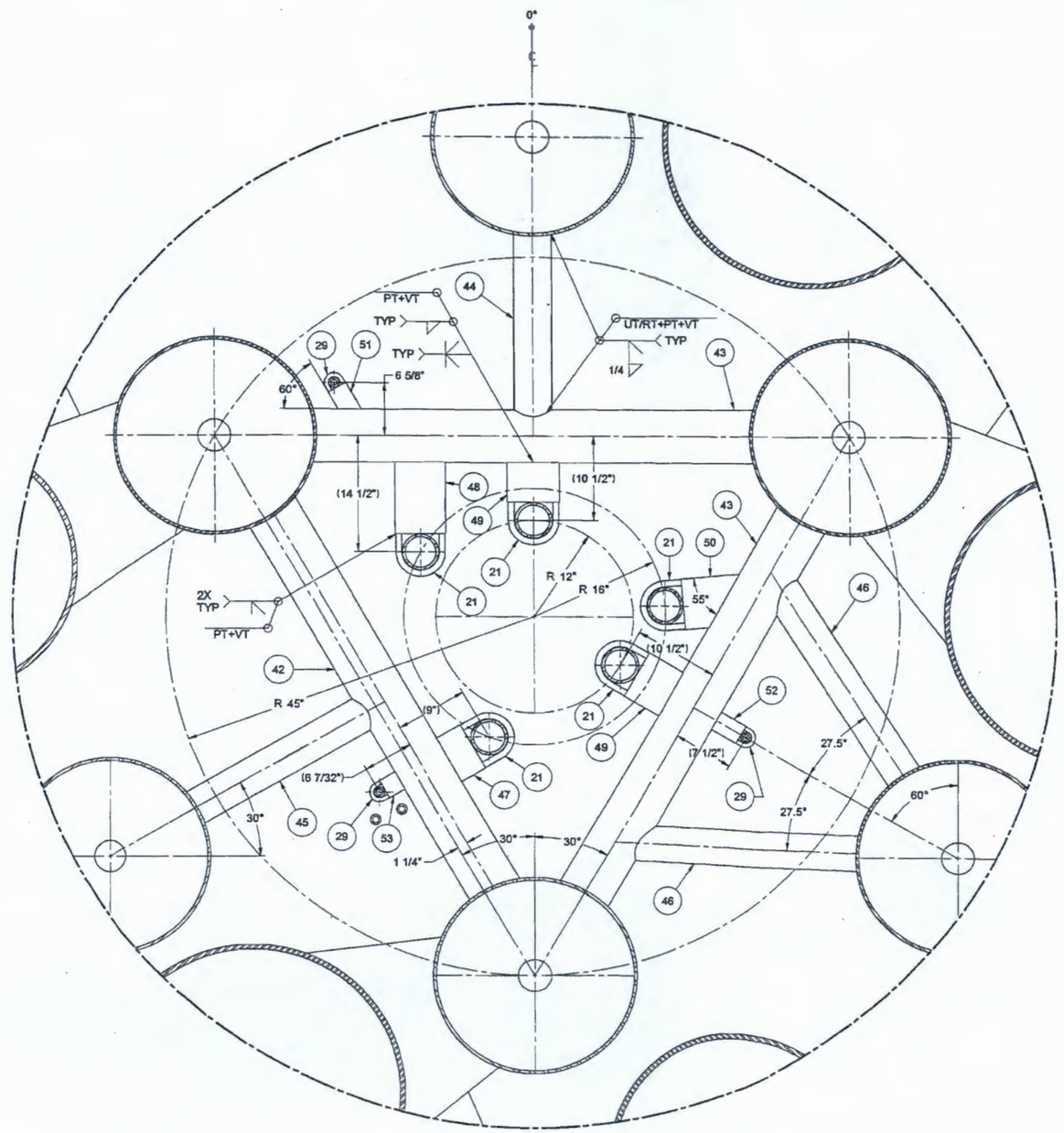

DETAIL C
SCALE: 1/8

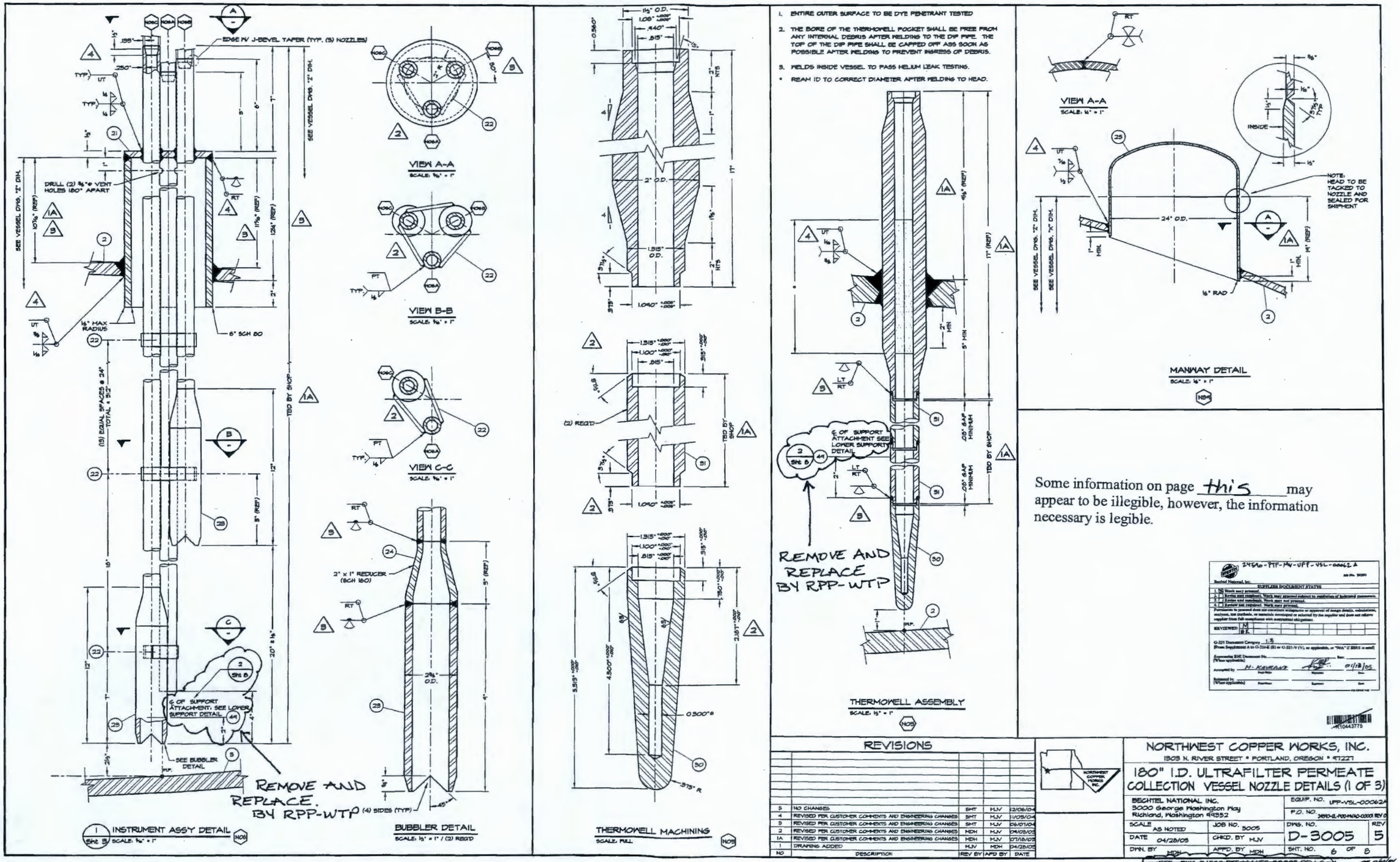

Some information on page this may appear to be illegible, however, the information necessary is legible.

P:\Seep\ACAD\03\D3005-5 PRELIM Mon Dec 06 09:41:05 2004

Some information on page this may appear to be illegible, however, the information necessary is legible.

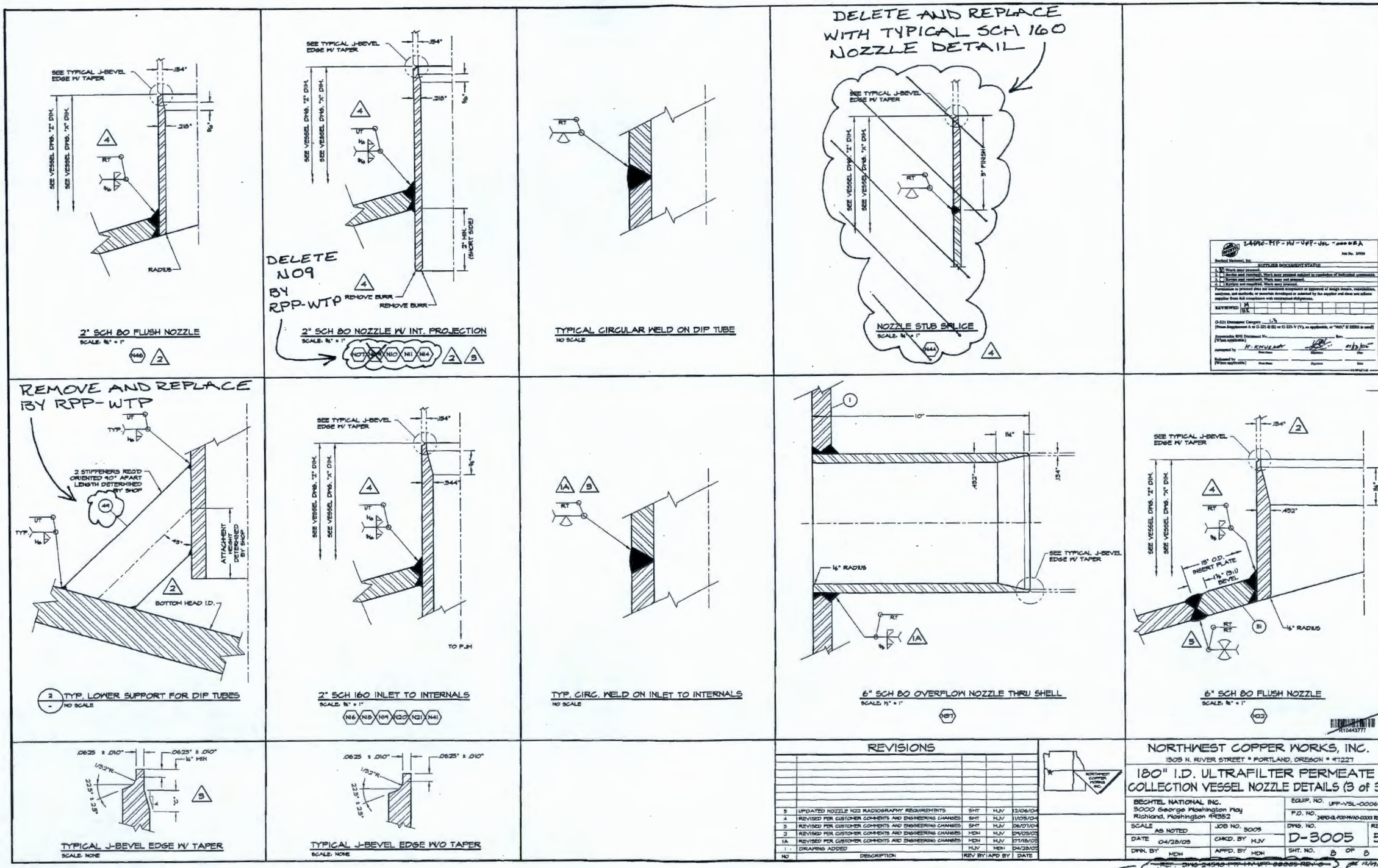

\\Swap\ACAD\03\03005-5 PRELIM Mon Dec 06 09:40:42 2004

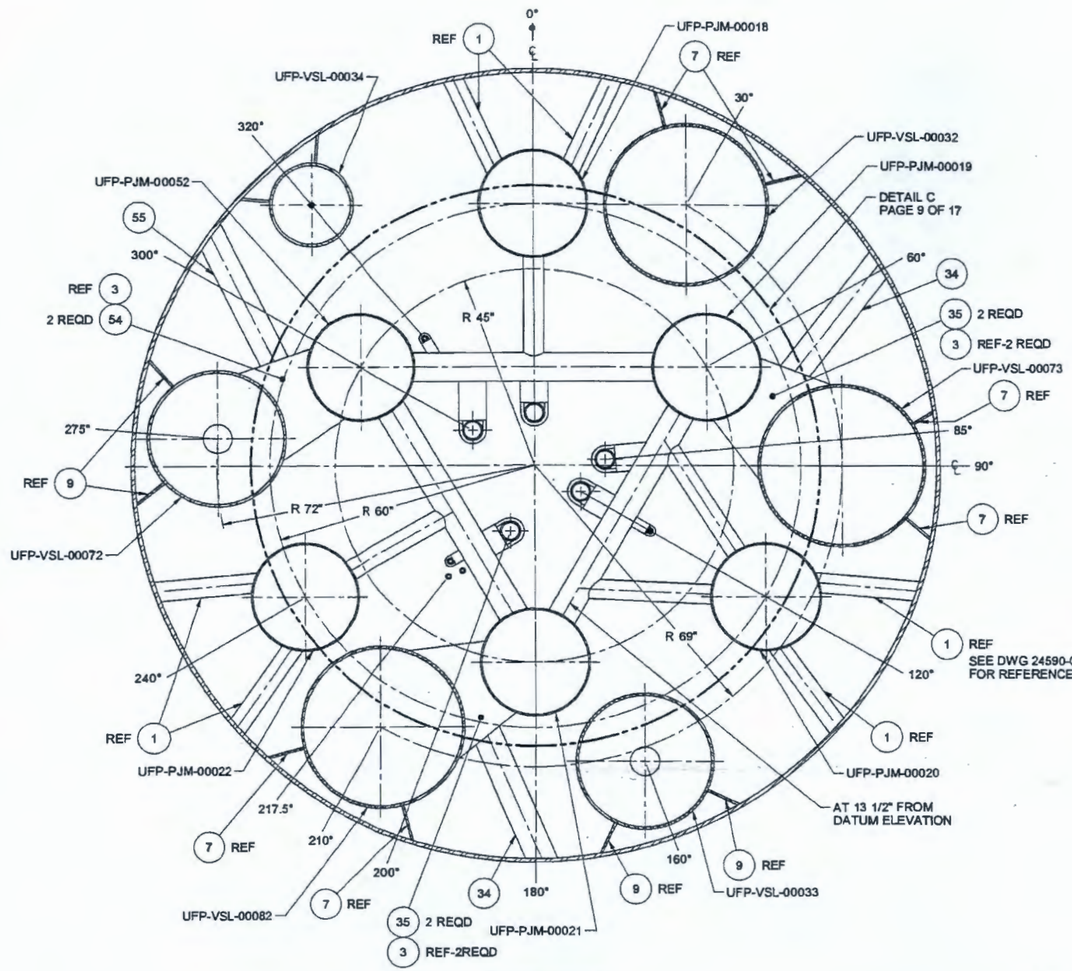

SECTION F-F
SCALE: 1/16

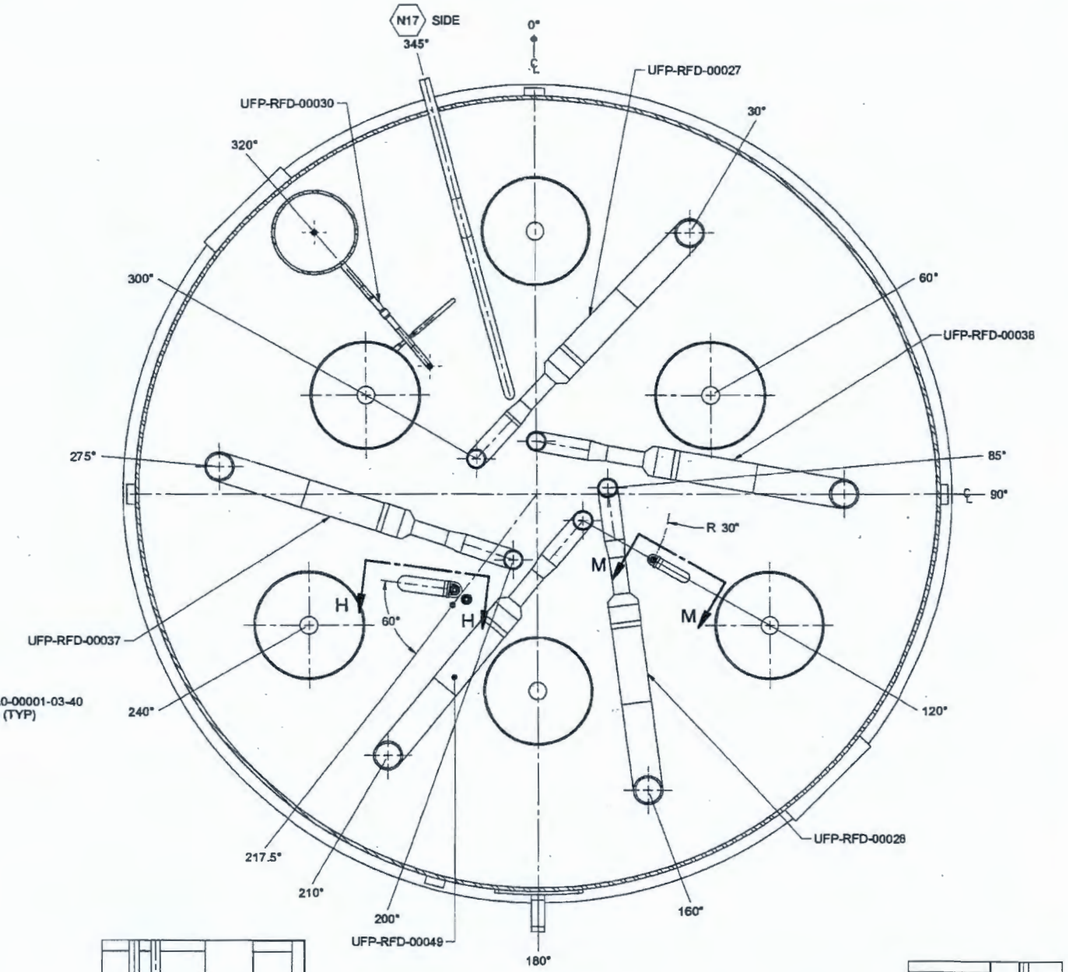

SECTION G-G
SCALE: 1/16

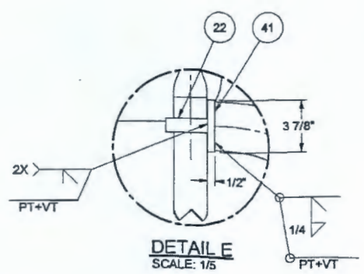

DETAIL E
SCALE: 1/5

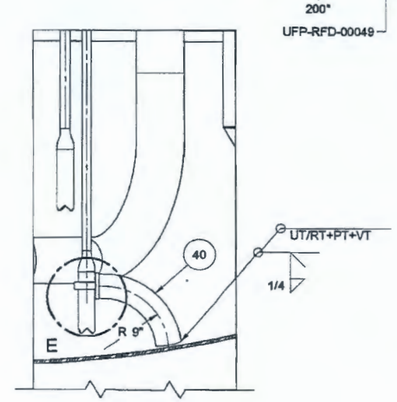

SECTION H-H
SCALE: 1/10

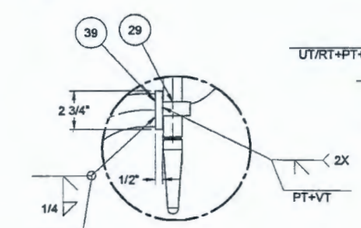

DETAIL D
SCALE: 1/5

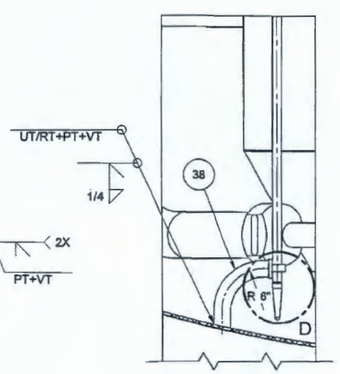

SECTION M-M
SCALE: 1/10

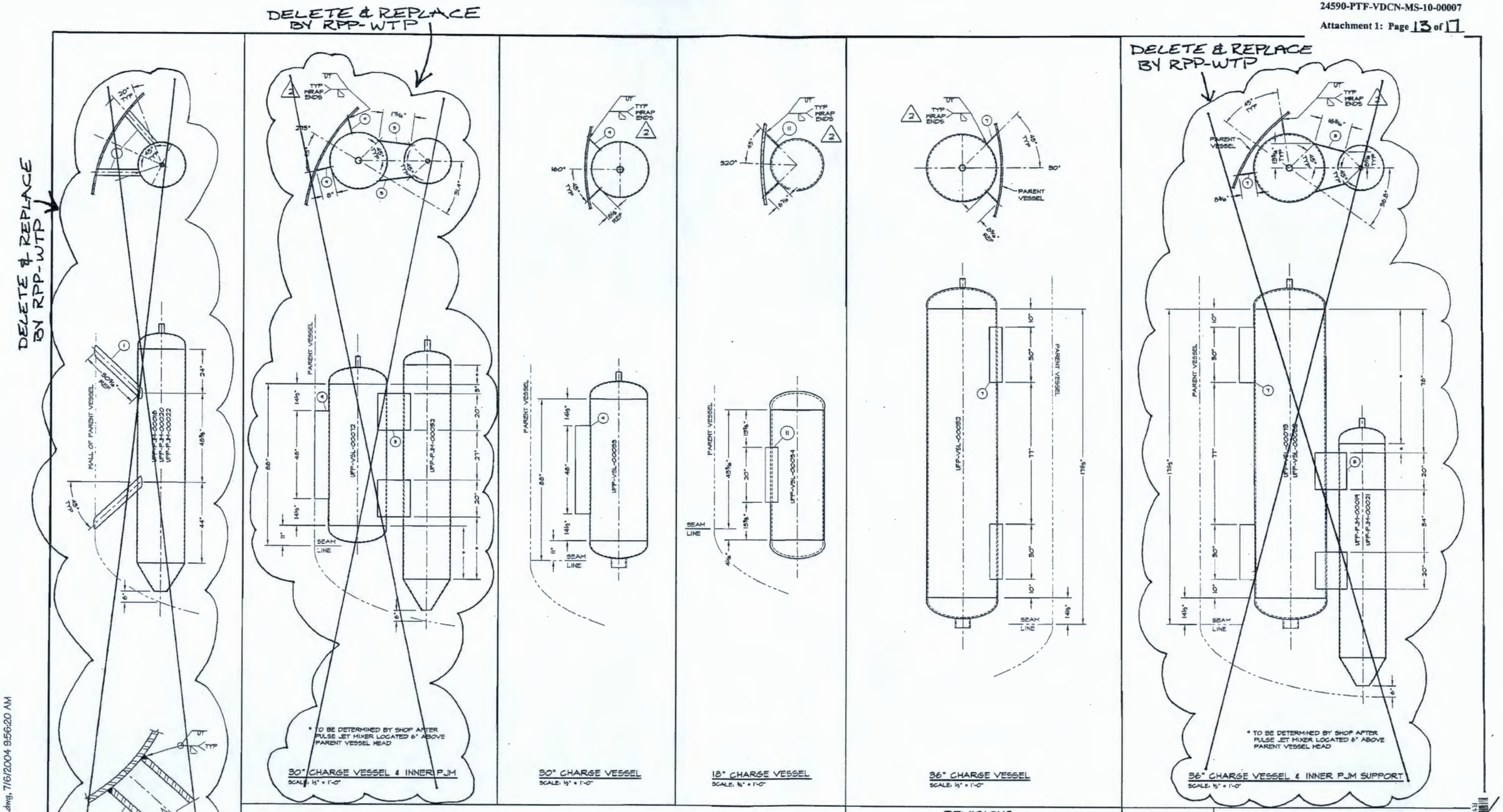

REVISIONS

NO	DESCRIPTION	REV BY	APD BY	DATE
2	REVISED PER ENGINEERING CHANGES	SKT	MDH	08/07/04
1	REVISED PER CUSTOMER COMMENTS	MJV	MDH	04/08/03

NORTHWEST COPPER WORKS, INC.
1303 N. RIVER STREET • PORTLAND, OREGON • 97227

180" I.D. ULTRAFILTER PERMEATE VESSEL INTERNAL SUPPORT

BECHTEL NATIONAL INC.
5000 George Washington Way
Richland, Washington 99352

SCALE AS NOTED	JOB NO. 3005F	EQUIP. NO. UFP-VSL-00062A	
DATE 08/06/03	CHKD. BY MDH	P.O. NO. 24590-QL-POD-MVAO-00001 REV 0	
DWN. BY MDH	APPD. BY MJV	DWG. NO. D-3005F	REV 2
		SHT. NO. 2 OF 2	

BECHTEL DOC. No. 24590-QL-POD-MVAO-00001-03-41 REV. 00B

P:\Swap\ACAD\03\D3005F-2.dwg, 7/6/2004 9:56:20 AM

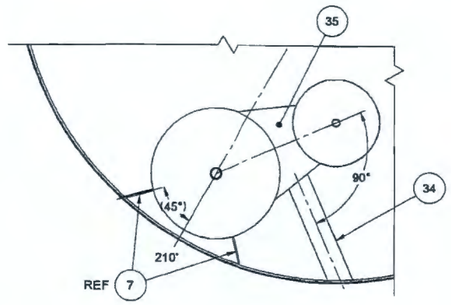

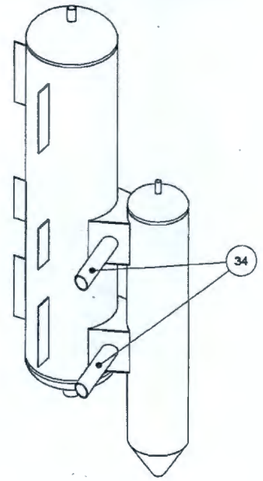

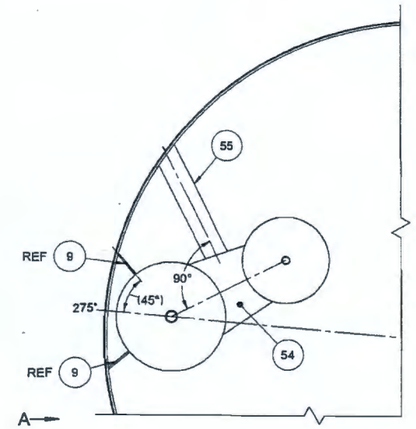

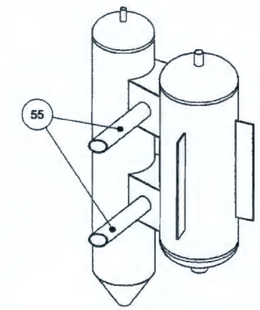

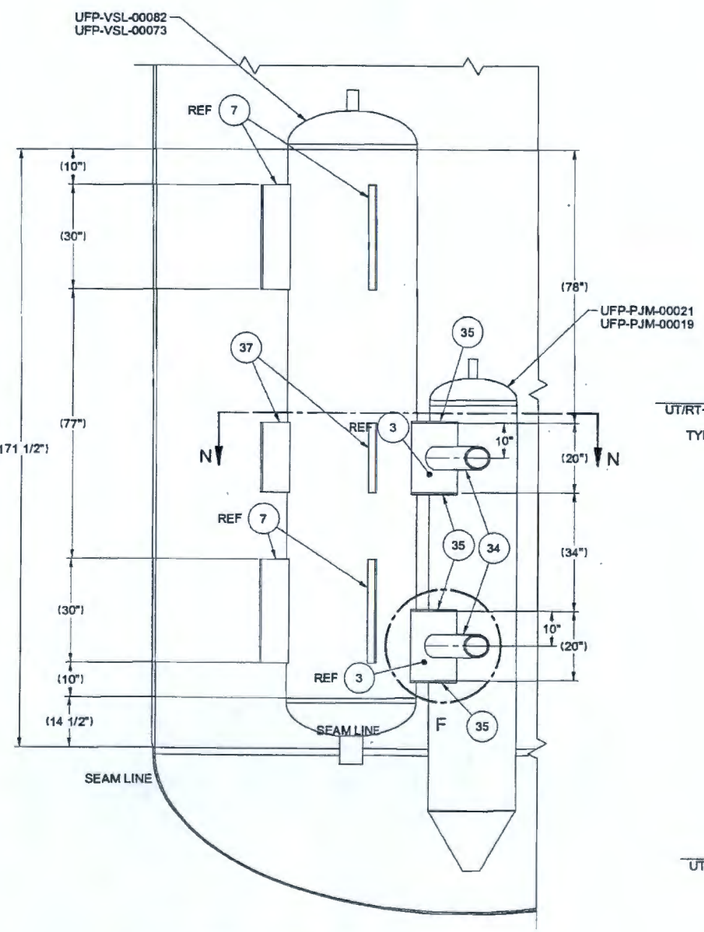

36" CHARGE VESSEL & INNER PJM SUPPORT
SCALE: 1/20
SEE DWG 24590-QL-POD-MVAO-00001-03-40
FOR REFERENCE BOM ITEMS

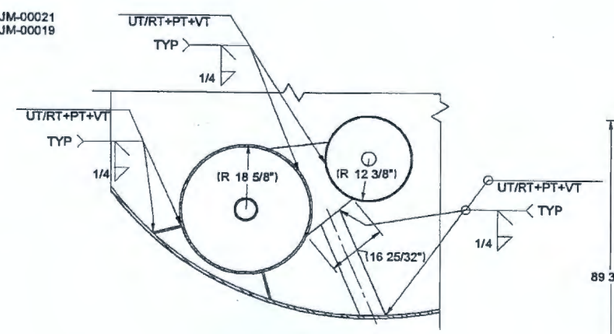

SECTION N-N
SCALE: 1/20

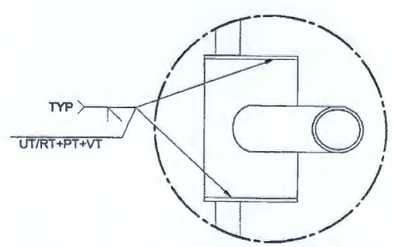

35 DETAIL F
SCALE: 1/10

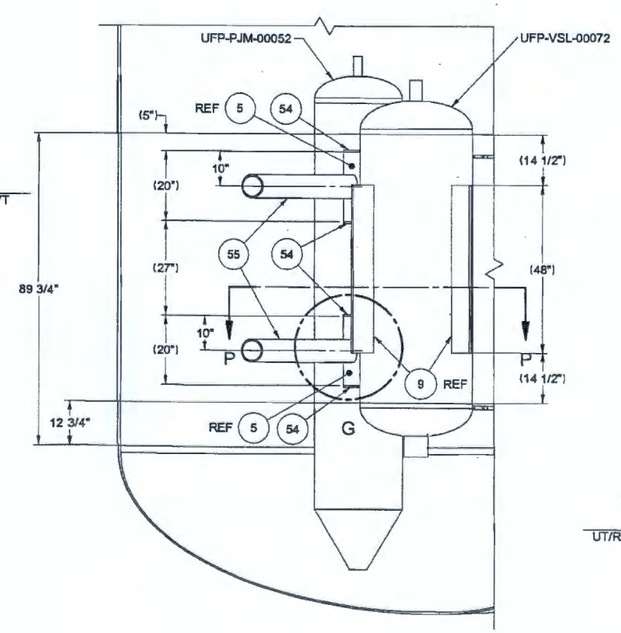

VIEW-A
30" CHARGE VESSEL & INNER PJM SUPPORT
SCALE: 1/20
SEE DWG 24590-QL-POD-MVAO-00001-03-40
FOR REFERENCE BOM ITEMS

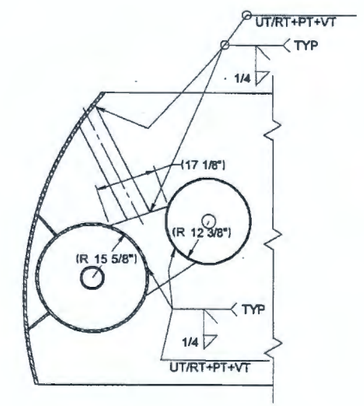

SECTION P-P
SCALE: 1/20

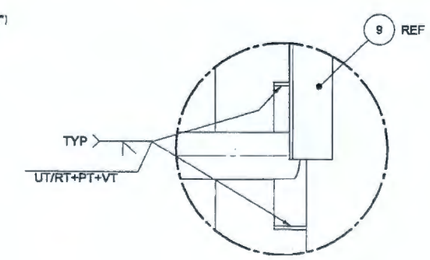

54 DETAIL G
SCALE: 1/10

Some information on page this may appear to be illegible, however, the information necessary is legible.

P:\Swap\ACAD\03\D3005-7 PRELIM.dwg, 6/20/2005 4:11:47 PM

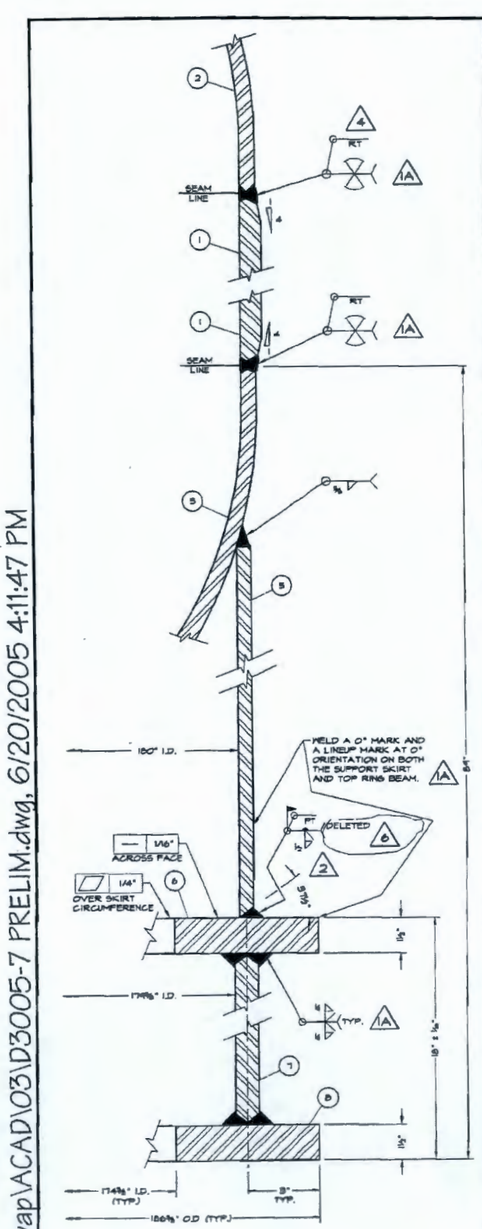

VESSEL SKIRT AND CROSS-SECTION
SCALE: ¼" = 1"

ULTRASONICALLY EXAMINE 100% OF AREA UNDERNEATH AND 5" BEYOND PERIMITER OF TAILING LUG GUSSET TO HEAD FILLET WELD.
EXAMINE 100% OF TAILING LUG GUSSET TO HEAD FILLET WELD
LIFTING LUG AND DOUBLER TO MATCH CONTOUR OF TANK

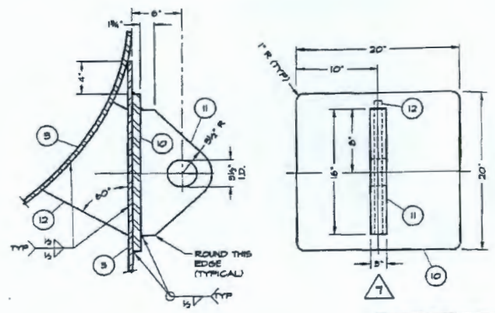

TAILING LUG DETAIL
SCALE: ¼" = 1"

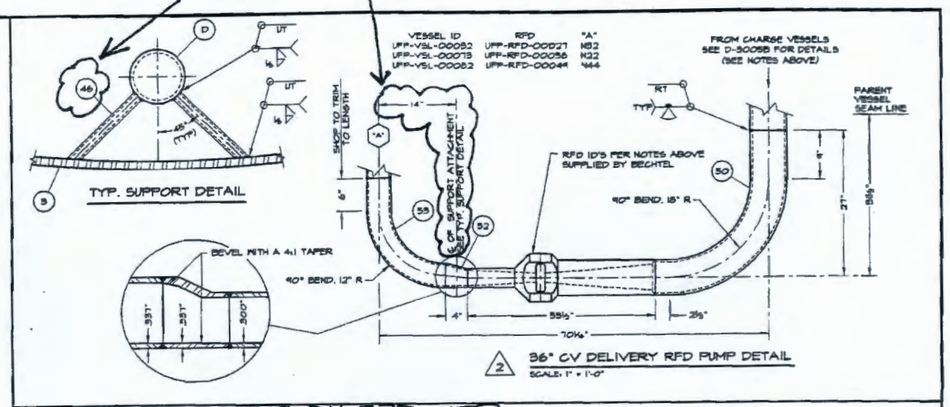

36" CV DELIVERY RFD PUMP DETAIL
SCALE: 1" = 1'-0"

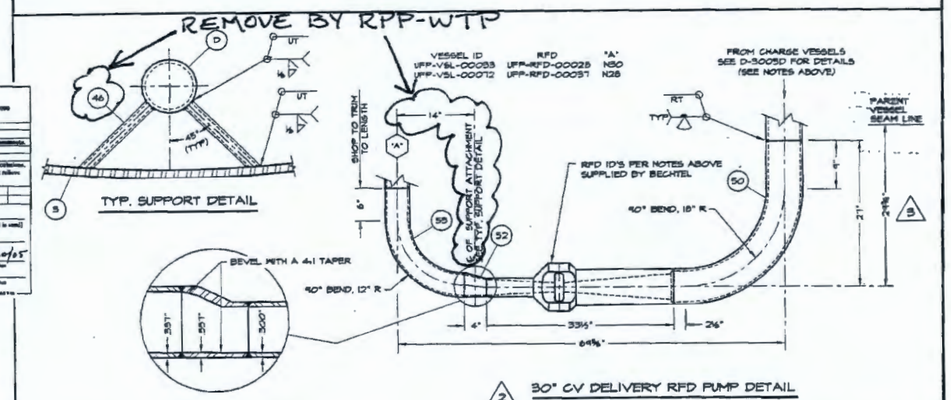

30" CV DELIVERY RFD PUMP DETAIL
SCALE: 1" = 1'-0"

ULTRASONICALLY EXAMINE 100% OF AREA UNDERNEATH AND 5" BEYOND PERIMITER OF REINFORCEMENT FILLET WELD.
EXAMINE 100% OF REINFORCEMENT FILLET WELD.

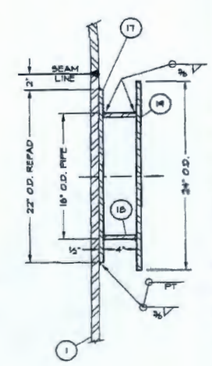

LIFTING TRUNNION DETAIL
SCALE: ½" = 1"

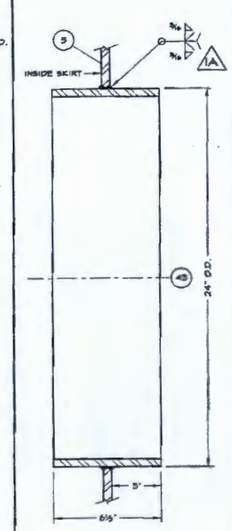

24" SKIRT ACCESS DETAIL
SCALE: ¼" = 1" / (2) REQ'D
(4S)

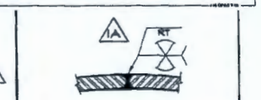

TYP. SHELL LONG. WELD
SCALE: ¼" = 1"

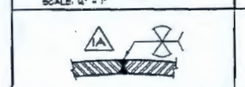

TYP. SKIRT/RING BEAM LONG. WELD
NO SCALE

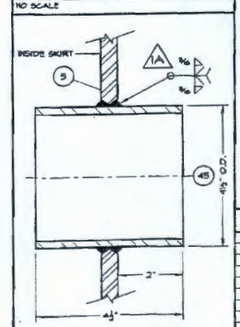

4" SKIRT VENT DETAIL
SCALE: ½" = 1" / (4) REQ'D
(4S)

24590-PTF-MV-UFP-VSL-00062A
Bechtel National, Inc.
SUPPLIER DOCUMENT STATUS
1. ☒ Work may proceed.
2. ☐ Review and resubmit. Work may proceed subject to resolution of indicated comments.
3. ☐ Review and resubmit. Work may not proceed.
4. ☐ Review not required. Work may proceed.
Permission to proceed does not constitute acceptance or approval of design details, calculations, analyses, test methods, or materials developed or selected by the supplier and does not relieve supplier from full compliance with contractual obligations.
REVIEWED 1-3
06/20/05

REVISIONS

NO	DESCRIPTION	REV BY	APD BY	DATE
7	UPDATED TAILING LUG DETAIL	RHS	MJV	06/20/05
6	DELETED FIELD WELD PROCEDURE DESIGNATION	RHS	MJV	03/30/05
5	NO CHANGES THIS DRAWING	SHT	MJV	12/06/04
4	REVISED PER CUSTOMER COMMENTS AND ENGINEERING CHANGES	SHT	MJV	11/05/04
3	REVISED PER CUSTOMER COMMENTS AND ENGINEERING CHANGES	SHT	MJV	08/07/04
2	REVISED PER CUSTOMER COMMENTS AND ENGINEERING CHANGES	MDH	MJV	04/05/03
1A	REVISED PER CUSTOMER COMMENTS AND ENGINEERING CHANGES	MDH	MJV	07/18/02
1	DRAWING ADDED	MJV	MDH	04/28/02

NORTHWEST COPPER WORKS, INC.
1503 N. RIVER STREET • PORTLAND, OREGON • 97227

180" I.D. ULTRAFILTER PERMEATE COLLECTION VESSEL DETAILS

BECHTEL NATIONAL INC.
3000 George Washington Way
Richland, Washington 99352

EQUIP NO UFP-VSL-00062A
P.O. NO. 24590-QL-POM-MVA0-00003 REV 0

SCALE AS NOTED | JOB NO. 3003 | DWG. NO D-3005 | REV 7
DATE 04/28/03 | CHKD. BY MJV
DWN. BY MDH | APPD. BY MDH | SHT NO. 4 OF 8

~~BEC DWG 24590-PTF-MV-UFP-00005-REV 0~~
BECHTEL DOC. 24590-QL-POD-MVA0-00001-03-20 REV. 00B
DELETED BY RPP-WTP

BILL OF MATERIALS					
MK	THICK/SIZE	MATERIAL	HEAT NO.	DESCRIPTION	QTY
59	1" Ø	SA 479 TYPE 316		BAR	2
60	1" SCHED 160S	SA 312 TP 316/316L 0.030% MAX C		SMLS PIPE, OFFSET	1

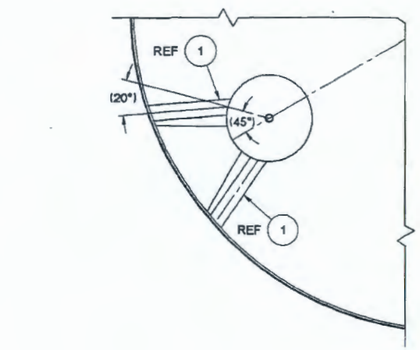

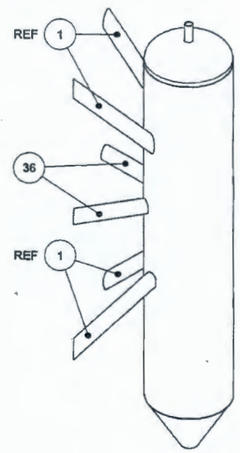

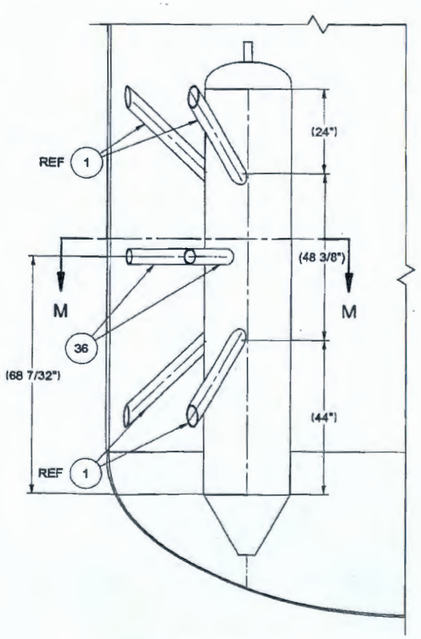

TYPICAL OUTER PJM SUPPORT
SCALE: 1/20
SEE DWG 24590-QL-POD-MVA0-00001-03-40
FOR REFERENCE BOM ITEMS (TYP)

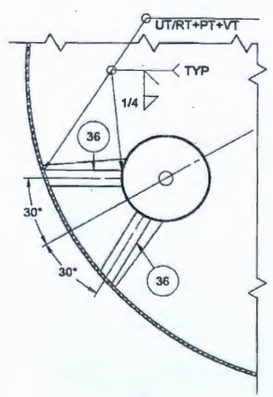

SECTION M-M
SCALE: 1/20

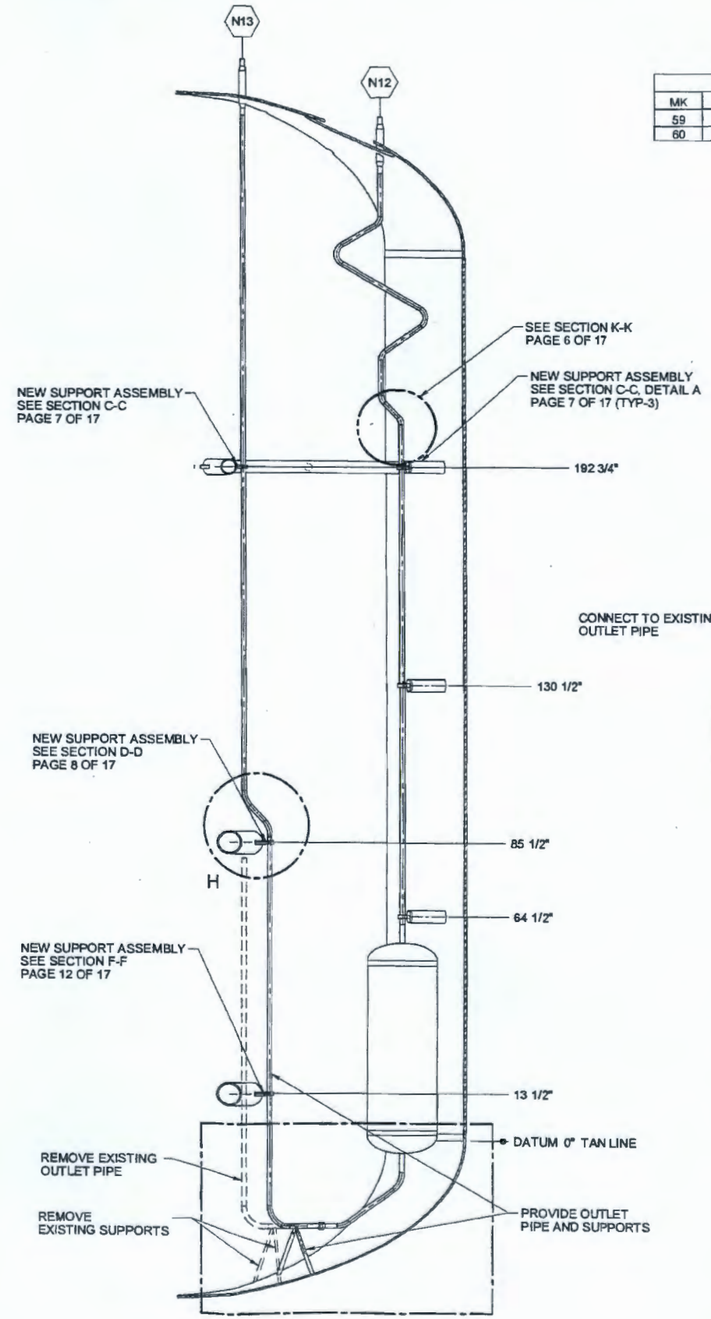

SAMPLER PUMP RFD ASSEMBLY
SCALE: 1/20
SEE DWG 24590-QL-POD-MVA0-00001-03-01
FOR REFERENCE BOM ITEMS

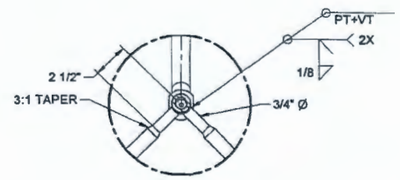

DETAIL J
SCALE: 1/5

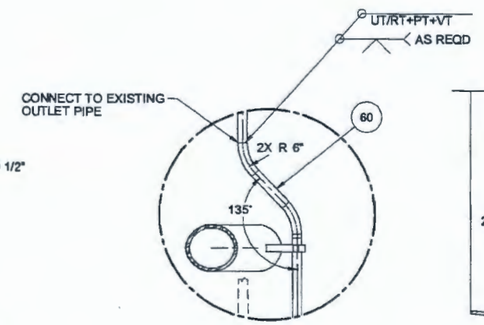

DETAIL H
SCALE: 1/10

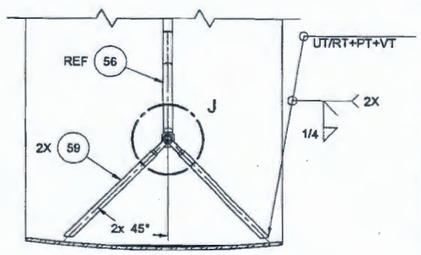

SECTION R-R
SCALE: 1/10

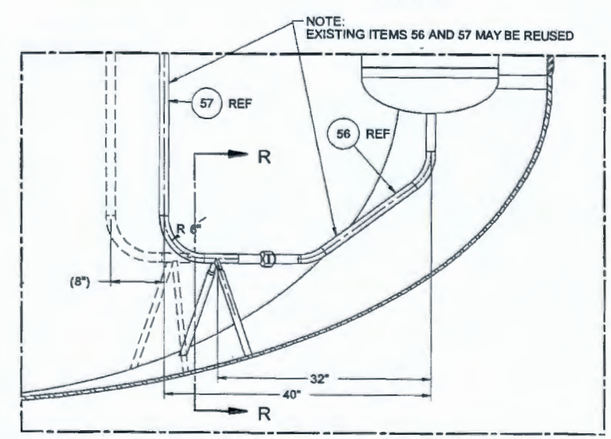

SAMPLER PUMP RFD DETAIL
SCALE: 1/10

Some information on page this may appear to be illegible, however, the information necessary is legible.

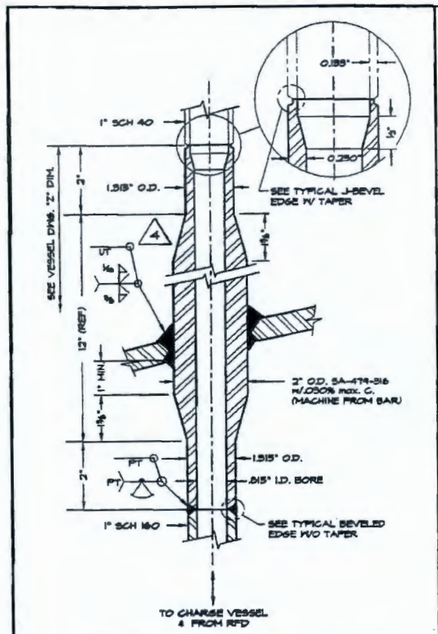

2" MACHINED BAR NOZZLE TO INTERNALS
SCALE: ½" = 1"
N12 N15 2

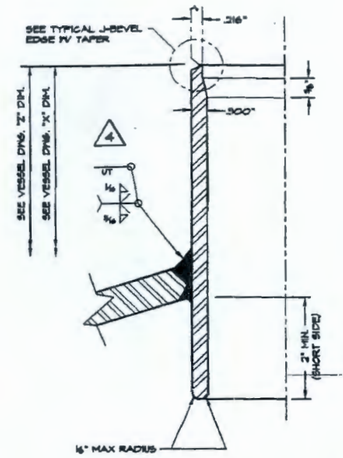

3" SCH 80 NOZZLE W/ INT. PROJECTION
SCALE: ¾" = 1"
N40 2

24590-PTF-MV-UFF-VSL-00062A
Bechtel National, Inc.
SUPPLIER DOCUMENT STATUS
1. [X] Work may proceed.
2. [ ] Revise and resubmit. Work may proceed subject to resolution of indicated comments.
3. [ ] Revise and resubmit. Work may not proceed.
4. [ ] Review not required. Work may proceed.
Permission to proceed does not constitute acceptance or approval of design details, calculations, analyses, test methods, or materials developed or selected by the supplier and does not relieve supplier from full compliance with contractual obligations.
REVIEWED
G-321 Document Category 1-3
(From Supplement A or G-321-E (S) or G-321-V (V), as applicable, or "N/A" if ISMS is used)
Approvals BNI Discrepancy No. Rev.
(When applicable)
Assigned by
Reviewed by
(When applicable)

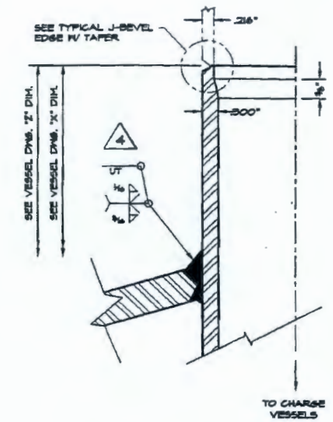

3" SCH 80 INLET TO INTERNALS
SCALE: ¾" = 1"
N23 N24 N25 N26 N45

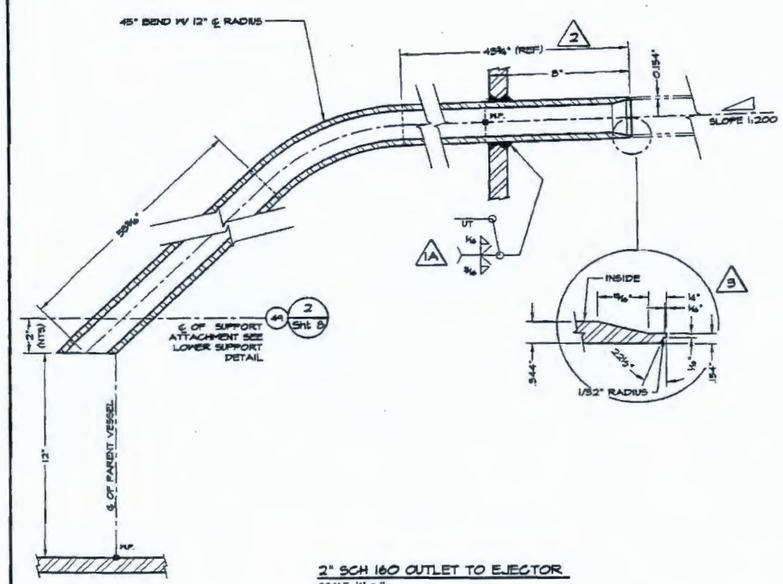

2" SCH 160 OUTLET TO EJECTOR
SCALE: ½" = 1"
N17

REMOVE AND REPLACE WITH 2" SCH 160, BY RPP-WTP

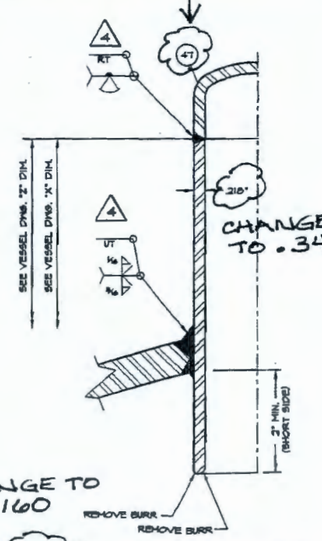

CHANGE DIMENSION TO .343, BY RPP-WTP

CHANGE TO SCH 160

160

2" SCH 80 CAPPED NOZZLE W/ INT. PROJECTION
SCALE: ¾" = 1"
N38 2

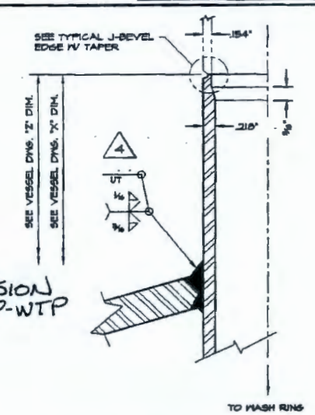

2" SCH 80 INLET TO INTERNALS
SCALE: ¾" = 1"
N34 N35 N36

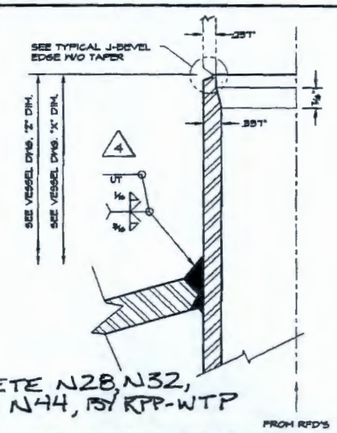

DELETE N28, N32, AND N44, BY RPP-WTP

4" SCH 80 OUTLET FROM INTERNALS
SCALE: ¾" = 1"
N28 N29 N30 N32 N44

R10443776

REVISIONS

NO	DESCRIPTION	REV BY	APD BY	DATE
5	NO CHANGES	SHT	HJV	12/06/04
4	REVISED PER CUSTOMER COMMENTS AND ENGINEERING CHANGES	SHT	HJV	11/05/04
3	REVISED PER CUSTOMER COMMENTS AND ENGINEERING CHANGES	SHT	HJV	06/07/04
2	REVISED PER CUSTOMER COMMENTS AND ENGINEERING CHANGES	MDH	HJV	04/08/03
1A	REVISED PER CUSTOMER COMMENTS AND ENGINEERING CHANGES	MDH	HJV	07/18/02
1	DRAWING ADDED	HJV	MDH	04/28/02

NORTHWEST COPPER WORKS, INC.
1503 N. RIVER STREET • PORTLAND, OREGON • 97227

180" I.D. ULTRAFILTER PERMEATE COLLECTION VESSEL NOZZLE DETAILS (2 OF 3)

BECHTEL NATIONAL INC.
3000 George Washington Way
Richland, Washington 99352

SCALE AS NOTED	JOB NO. 3005	EQUIP. NO. UFF-VSL-00062A	
DATE 04/28/03	CHKD. BY HJV	P.O. NO. 24590-QL-POD-MVAO-00003 REV 0	
DWN. BY MDH	APPD. BY MDH	DWG. NO. D-3005	REV 5
		SHT. NO. 7 OF 8	

~~REF: DWG 24590-PTF-MV-UFF-00005 REV 0~~
BECHTEL DOC. 24590-QL-POD-MVAO-00001-05-23 REV. 00 SE
DELETED BY RPP-WTP

P:\SwpVACAD\03\D3005-5 PRELIM Mon Dec 06 09:40:54 2004

Drawing Change Notice

CHANGE DOCUMENT NO.
24590-PTF-VDCN-MS-10-00008

ISSUED BY
RPPWTP PDC

R11307066

JOB NO.	TITLE FOR CHANGE NOTICE
24590	UFP-VSL-00062B Redesign

DESIGN DOCUMENT NUMBER	REV	DESIGN DOCUMENT NUMBER	REV
24590-QL-POD-MVA0-00001-03-04	F	24590-QL-POD-MVA0-00001-03-05	F
24590-QL-POD-MVA0-00001-03-06	F	24590-QL-POD-MVA0-00001-03-30	G
24590-QL-POD-MVA0-00001-03-31	E	24590-QL-POD-MVA0-00001-03-32	E
24590-QL-POD-MVA0-00001-03-33	E	24590-QL-POD-MVA0-00001-03-34	E
24590-QL-POD-MVA0-00001-03-42	B	24590-QL-POD-MVA0-00001-03-43	B

PART OF DESIGN CHANGE PACKAGE (DCP)? ☐ Yes ☒ No DCP No.: N/A Rev:

JUSTIFICATION FOR CHANGE	CAUSE CODE
Based on the re-analysis of UFP-VSL-00062B, per calculation 24590-PTF-MVC-UFP-00023, for revised seismic conditions and design evolution, required a redesign of the vessel.	01 and 23

Supersedes Change Document ☐ Yes ☒ No

ECN Needed ☐ Yes ☒ No

REQUIREMENTS REVIEW

Client Approval Required ☐ Yes ☐ No | Interface Resolution Required * ☐ Yes ☒ No

Address any "yes" answers in the description

DESCRIPTION OF CHANGE

NOTE: Components removed or deleted per this VDCN are to be removed from the actual vessel unless otherwise noted.

1. **Affected Document: 24590-QL-POD-MVA0-00001-03-04 (see Attachment 1, page 1 of this VDCN).**

   a.) Design Conditions block: Change 'Design Pressure' to 15 / -2.0

   b.) Design Conditions block: Change temperature to 230°F.

   c.) Bill of Materials block: Delete the following Line Items:

   Line item 46

   Line item 49

   Line item 54

   Line item 55

   Line item 58

   Please note that source, special nuclear, and byproduct materials, as defined in the Atomic Energy Act of 1954 (AEA) are regulated at the U. S. Department of Energy (DOE) facilities exclusively by DOE acting pursuant to its AEA authority. DOE asserts that pursuant to AEA, it has sole and exclusive responsibility and authority to regulate source, special nuclear, and byproduct materials at DOE-owned nuclear facilities. Information contained herein on radionuclides is provided for process description purposes only.

   d.) Bill of Materials block: Add item 59 and 60 shown on Attachment 1, page 16 of this VDCN.

   e.) Estimated Weight (in LBS) block, change as follows:

   OPERATING - 512,285 lbs

   FULL WATER - 401,100 lbs

   EMPTY - 103,000 lbs

   f.) General Notes and Special Requirements: Delete Note 8 and replace with the following text:

   Fabrication tolerances for field modifications shall be per 24590-WTP-MV-M59T-00001 (Pressure Vessel Tolerances Standard Details) and PFI Standard ES-24 (Pipe Bending Methods, Tolerances, Process and Material Requirement). For tolerances not specified by these standards, the following shall apply, unless otherwise noted:

Dimension	Tolerance
Linear < 12 inch	± 1/8 inch
Linear ≥ 12 inch	± 1/4 inch
Angular	± 2 degrees

   g.) RT per ASME Section VIII Div. 1 Appendix 4: Item 3, delete second sentence "This does not include internal pipe supports and braces".

Drawing Change Notice

CHANGE DOCUMENT NO.
24590-PTF-VDCN-MS-10-00008

JOB NO.	TITLE FOR CHANGE NOTICE
24590	UFP-VSL-00062B Redesign

DESCRIPTION OF CHANGE

h.) Connection Schedule block: Change the 'NECK THK' to SCH 160 for the following nozzles:

N07

N10

N36

i.) Connection Schedule block: Change the 'NECK MATERIAL' to SA312 TP316/316L 0.030% MAX C for the following nozzles:

N07

N10

N36

j.) RT per ASME Section VIII Div.1 Appendix 4 block: Change Appendix 4 to read "UW-51".

k.) Under title block, delete BNI reference drawing entitled, "REF DWG 24590-PTF MV-UFP-00006 REV 0".

2. **Affected Document: 24590-QL-POD-MVA0-00001-03-05 (see Attachment 1, page 2 of this VDCN).**

a.) Vessel Elevation View:

(1.) Delete supports and associated part bubbles depicted on drawing.

(2.) Delete support dimensions depicted on drawing.

(3.) Under title block, delete BNI reference entitled, "REF DWG 24590-PTF MV-UFP-00006 REV 0".

3. **Affected Document: 24590-QL-POD-MVA0-00001-03-06 (see Attachment 1, page 3 of this VDCN).**

a.) Vessel Orientation: Delete supports as shown.

b.) Internal Pipe Brace Details: Remove Items 48 and 55. NOTE: Pipe Lugs are to remain in place.

c.) Internal Pipe Brace Details: Delete detail and remove components.

d.) Under title block, delete BNI reference drawing entitled, "REF DWG 24590-PTF MV-UFP-00006 REV 0".

4. **Affected Document: 24590-QL-POD-MVA0-00001-03-42 (see Attachment 1, page 4 of this VDCN).**

a.) Elevation View: Delete Elevation View and replace with NORTH ELEVATION VIEW shown on Attachment 1, page 5 of this VDCN.

b.) Internal Vessel Support Orientation: Remove view as this will be covered in Sections B-B, C-C, D-D, E-E, F-F, and G-G shown on Attachment 1, page 5 of this VDCN.

c.) Add BILL OF MATERIALS items 12 through 55 shown on Attachment 1, page 5 of this VDCN.

d.) Add SECTION B-B shown on Attachment 1, page 6 of this VDCN.

e.) Add SECTION J-J and item 12 THERMAL EXPANSION S-BEND shown on Attachment 1, page 6 of this VDCN.

f.) Add SECTION K-K and item 14 THERMAL EXPANSION S-BEND shown on Attachment 1, page 6 of this VDCN.

g.) Add SECTION L-L and item 13 THERMAL EXPANSION S-BEND shown on Attachment 1, page 6 of this VDCN.

h.) Shown on Attachment 1, page 7 of this VDCN, add the following:

(1.) SECTION C-C

(2.) DETAIL-A

(3.) Item 21 - GUIDE RING

(4.) Item 22 - GUIDE RING

(5.) Item 29 - GUIDE RING

(6.) Construction, NOTE 1

Drawing Change Notice

CHANGE DOCUMENT NO.
24590-PTF-VDCN-MS-10-00008

JOB NO.	TITLE FOR CHANGE NOTICE
24590	UFP-VSL-00062B Redesign

DESCRIPTION OF CHANGE

i.) Construction Notes block add the following numbered notes:

NOTE 2: WHERE PLATE MATERIAL IS SPECIFIED AS ASME SA240, ASME SA479 MATERIAL MAY BE SUBSTITUTED.

j.) Add SECTION D-D shown on Attachment 1, page 8 of this VDCN.

k.) Add SECTION E-E shown on Attachment 1, page 8 of this VDCN.

l.) Add Detail C shown on Attachment 1, page 9 of this VDCN.

m.) Add SECTION F-F shown on Attachment 1, page 12 of this VDCN.

n.) Add SECTION G-G shown on Attachment 1, page 12 of this VDCN.

o.) Typo in BECHTEL DOC. No.: Change 24590-QL-POB-MVA0-00001-03-42 to read as 24590-QL-**POD**-MVA0-00001-03-42.

5. **Affected Document: 24590-QL-POD-MVA0-00001-03-32 (see Attachment 1, page 10 of this VDCN).**

a.) Instrument Assy Detail: Remove support item 49 and replace with SECTION H-H and DETAIL-E shown on Attachment 1, page 12 of this VDCN.

b.) Thermowell Assembly: Remove support item 49 and replace with SECTION M-M and DETAIL-D shown on Attachment 1, page 12 of this VDCN.

c.) Under title block, delete BNI reference drawing entitled, "REF DWG 24590-PTF MV-UFP-00006 REV 0".

6. **Affected Document: 24590-QL-POD-MVA0-00001-03-34 (see Attachment 1, page 11 of this VDCN).**

a.) Typ Lower Support For Dip Tubes: Remove support item 49 for N05 and N06 only.
NOTE: This support detail is covered on Vendor drawing 24590-QL-POD-MVA0-00001-03-32 as reflected in item 5 of this VDCN.

b.) 2" SCH 80 NOZZLE W / INT PROJECTION: Delete N07 and N10 and replace with Typical 160 SCH Detail.

c.) Under title block, delete BNI reference drawing entitled, "REF DWG 24590-PTF MV-UFP-00006 REV 0".

7. **Affected Document: 24590-QL-POD-MVA0-00001-03-43 (see Attachment 1, page 13 of this VDCN).**

a.) Typical Outer PJM Pipe Support: Delete Typical Outer PJM Pipe Support view and replace with TYPICAL OUTER PJM SUPPORT, SECTION S-S and associated views shown on Attachment 1, page 16 of this VDCN.

b.) 30" Charge Vessel & Inner PJM: Delete 30" Charge Vessel & Inner PJM view and replace with 30" CHARGE VESSEL & INNER PJM SUPPORT, SECTION P-P, item 54 DETAIL G and associated views shown on Attachment 1, page 14 of this VDCN.

c.) 36" Charge Vessel & Inner PJM Support: Delete 36" Charge Vessel & Inner PJM Support and replace with VIEW A 36" CHARGE VESSEL & INNER PJM SUPPORT, SECTION N-N, item 35 DETAIL F, and associated views shown on Attachment 1, page 14 of this VDCN.

d.) Typo in BECHTEL DOC. No.: Change 24590-QL-POB-MVA0-00001-03-43 to read as 24590-QL-**POD**-MVA0-00001-03-43.

8. **Affected Document: 24590-QL-POD-MVA0-00001-03-30 (see Attachment 1, page 15 of this VDCN).**

a.) 36" CV Delivery RFD Pump Detail: Remove support item 46 from TYP SUPPORT DETAIL and reference to SEE TYP SUPPORT DETAIL including dimension.

b.) 30" CV Delivery RFD Pump Detail: Remove support item 46 from TYP SUPPORT DETAIL and reference to SEE TYP SUPPORT DETAIL including dimension.

c.) Sampler RFD Pump Detail:

(1.) Remove support item 58 from TYP SUPPORT DETAIL.

(2.) Add DETAIL J, SECTION R-R, and SAMPLER PUMP RFD DETAIL shown on Attachment 1, page 16 of this VDCN.

(3.) Delete Sampler detail and replace with SAMPLER PUMP RFD ASSEMBLY and DETAIL H shown on Attachment 1, page 16 of this VDCN.

d.) Under title block, delete BNI reference drawing entitled, "REF DWG 24590-PTF MV-UFP-00006 REV 0".

Drawing Change Notice

CHANGE DOCUMENT NO.
24590-PTF-VDCN-MS-10-00008

JOB NO.	TITLE FOR CHANGE NOTICE
24590	UFP-VSL-00062B Redesign

DESCRIPTION OF CHANGE

9. **Affected Document: 24590-QL-POD-MVA0-00001-03-33 (see Attachment 1, page 17 of this VDCN).**
   a.) 2"SCH 80 INLET TO INTERNALS: Delete N36 and replace with Typical SCH 160 Nozzle Detail (REF Section Q-Q).
   b.) Under title block, delete BNI reference drawing entitled, "REF DWG 24590-PTF MV-UFP-00006 REV 0".

10. **Affected Document: 24590-QL-POD-MVA0-00001-03-31 (see Attachment 1, page 18 of this VDCN).**
   a.) WASH RING TEE: Delete N36 and add Section Q-Q which depicts N36 details show on Attachment 1, page 6 of this VDCN.
   b.) Under title block, delete BNI reference drawing entitled, "REF DWG 24590-PTF MV-UFP-00006 REV 0".

ORIGINATOR	CHECKER
M. Mudry	L. Rodgers

Reviews

CON - K. Keck R ZIELINSKI for K Keck per CCN 227735 R Zielinski	E&NS - J. Hinckley	CS&A - ~~S. Germain~~ 1/5/11	MET - J. Disney
MS&PE - D. Vo	PD - J. McGrath	PE&T - J. Olson	

Approval(s)

PEQ - J. Julyk			

Date *(inserted by final approver)*: 1/5/11

Some information on page this may appear to be illegible, however, the information necessary is legible.

CHANGE N07, N10 AND N36 MATERIAL TO SA312 TP316/316L 0.030% MAX C, BY RPP-WTP

CHANGE N07, N10, AND N36 TO SCH 160, BY RPP-WTP

DELETE AND REPLACE BY RPP-WTP

DESIGN CONDITIONS

SPECIFICATIONS	PARENT VESSEL
DESIGN PRESSURE	~~[illegible] psig~~ 15/-2.0 BY RPP-WTP
HYDRO-TEST PRESSURE	14.5 psig + 15.5 psig S.H.
DESIGN TEMPERATURE	~~[illegible]~~ 230°F BY RPP-WTP
MDMT	40° F.
CODE	ASME SECTION VIII, DIVISION I, 2001 EDITION, 2001 ADDENDUM
CODE STAMP (National Board No.)	REQUIRED
NON-DESTRUCTIVE TESTING	VT, UT, PT, RT, HELIUM TESTING, AND HYDROSTATIC TESTING PER ASME SECT. VIII, DIV. I
RADIOGRAPH (5)	PER PARA. 6.5.5 OF SPECIFICATION 24590-WTP-3PN-MV00-00006
JOINT EFFICIENCY	PER UW-12
CORROSION ALLOWANCE	0.04"
INSPECTION OPENINGS	REQUIRED PER UG-46(a)
IMPACT TESTING	NOT REQUIRED PER UHA-51(d)
POSTWELD HEAT TREATING	NOT REQUIRED PER UHA-32
MATERIAL: BOLTS/STUDS/NUTS	NOT APPLICABLE
MATERIAL: GASKETS	NOT APPLICABLE
INSULATION	NOT REQUIRED
WIND DESIGN	NOT REQUIRED
SNOW DESIGN	NOT REQUIRED
SEISMIC DESIGN	SC-I PER 24590-WTP-3PS-MV00-T0002 & 24590-WTP-3PS-SS90-T0001
BECHTEL QUALITY LEVEL	QL-I

(1) (1A) (2) (3) BILL OF MATERIALS

MK	THICK/SIZE	MATERIAL	HEAT NO.	DESCRIPTION	QTY
1	⅜"	SA-240-316 w/ 0.030% max. C		SHELL	1
2	⅝" NOM.	SA-240-316 w/ 0.030% max. C		TOP HEAD - 180" I.D., 2:1 SE w/ 2" S.F. (⅜" MIN. AFTER FORMING)	1
3	⅝" NOM.	SA-240-316 w/ 0.030% max. C		BOTTOM HEAD - 180" I.D., 2:1 SE w/ 2" S.F. (⅜" MIN. AFTER FORMING)	1
4					
5	⅜"	SA-240-304 w/ 0.030% max. C		SUPPORT SKIRT	1
6	1½"	SA-240-304 w/ 0.030% max. C		SUPPORT RING BEAM TOP	1
7	1"	SA-240-304 w/ 0.030% max. C		SUPPORT RING BEAM SHELL	1
8	1½"	A-572-GR50		SUPPORT RING BEAM BOTTOM	1
9					
10	1"	SA-240-304 w/ 0.030% max. C		TAILING LUG BACKING PLATE - 20" x 20"	1
11	2"	SA-240-304 w/ 0.030% max. C		TAILING LUG	1
12	1"	SA-240-304 w/ 0.030% max. C		TAILING LUG GUSSET	1
13	—	——		DELETED	-
14					
15					
16					
17	½"	SA-240-316 w/ 0.030% max. C		LIFTING TRUNNION REPAD - 22" O.D.	2
18	½"	SA-240-304 w/ 0.030% max. C		LIFTING TRUNNION BARREL - 16" O.D. x 4" LONG	2
19	½"	SA-240-304 w/ 0.030% max. C		LIFTING TRUNNION KEEPER PLATE - 24" O.D.	2
20					
21	1½"	SA-240-316 w/ 0.030% max. C		INSTRUMENT ASSEMBLY COVER PLATE	1
22	¼" x 1"	SA-240-316 w/ 0.030% max. C		INSTRUMENT ASSEMBLY SPACERS	23
23	2" SCH 160	SMLS. SA-312-TP316 w/ 0.030% max. C		BUBBLER SHELL	2
24	2" x 1"	SMLS. SA-312-TP316 w/ 0.030% max. C		BUBBLER REDUCER - 2 x 1, SCH 160	2
25	⅝" NOM.	SA-182-F316 w/ 0.030% max. C		MANWAY HEAD, 24" O.D., ASME F&D w/ 1½" S.F.	1
26					
27					
28					
29					
30	1½"⌀	SA-182-F316 w/ 0.030% max. C		THERMOWELL POCKET (MACHINE PER DETAIL)	1
31	1" SCH 160	SMLS. SA-312-TP316 w/ 0.030% max. C		THERMOWELL DIP TUBE	2
32	2" SCH 40	SMLS. SA-312-TP316 w/ 0.030% max. C		WASH RING PIPE	1
33	⅜"	SA-240-316 w/ 0.030% max. C		WASH RING END CAP PLATE	6
34	⅜" x 2"	SA-240-316 w/ 0.030% max. C		WASH RING SUPPORTS	6
35	2" SCH 40	SMLS. SA-403-WP316S w/ 0.030% max. C		WASH RING TEE - 2" SCH 40 STRAIGHT TEE	3
36					
37	⅜"	SA-240-316 w/ 0.030% max. C		NAMEPLATE BRACKET (14" x 14" V w/ 2" LEGS) (4)	1
38					
39	MISC.	SA-240-316 w/ 0.030% max. C		PULSE JET MIXER (6) - SEE DWG. 3006A FOR DETAILS	6
40	MISC.	SA-240-316 w/ 0.030% max. C		CHARGE VESSEL (36") - SEE DWG. 3006B FOR DETAILS	3
41	—	——		DELETED	-
42	MISC.	SA-240-316 w/ 0.030% max. C		CHARGE VESSEL (30") - SEE DWG. 3006D FOR DETAILS	2
43	½"	SA-240-304 w/ 0.030% max. C		SKIRT ACCESS (24" ⌀)	2
44	MISC.	SA-240-316 w/ 0.030% max. C		CHARGE VESSEL (18") - SEE DWG. 3006E FOR DETAILS	1
45	4" SCH 40	SA-312-TP316 w/ 0.030% max. C		SKIRT VENT (4½")	4
46	~~[illegible] SCH 160~~	~~SA-312-TP316 w/ 0.030% max. C~~		~~INTERNAL PIPING SUPPORT~~	~~[illegible]~~
47	STD.	SA-403-316 w/ 0.030% max. C		2" SCH 80 CAP	1
48 (3)	¼" x 3" x 3"	SA-479-316 w/ 0.030% max. C		INTERNAL PIPING SUPPORT ANGLE	4
49	~~[illegible]~~	~~SA-240-316 w/ 0.030% max. C~~		~~INTERNAL PIPING LOWER SUPPORT~~	~~A/R~~
50	6" SCH 80	SA-312-TP316 w/ 0.030% max. C		CONNECTING PIPE, LENGTH A/R	3
51	1"	SA-240-316 w/ 0.030% max. C		INSERT PLATE (15" OD)	1
52	Sch 160	SA-403WP-316 w/ 0.030% max. C		4" x 3" ECC. REDUCER - ENDS MACHINED TO SCH 80	2
53	4" SCH 80	SA-312-TP316 w/ 0.030% max. C		CONNECTING PIPE, LENGTH A/R	3
54	~~[illegible]~~	~~SA-403WP-316 w/ 0.030% max. C~~		~~4" x 3" ECCENTRIC REDUCER~~	~~[illegible]~~
55 (3)	~~[illegible]~~	~~SA-479-316 w/ 0.030% max. C~~		~~INTERNAL PIPING SUPPORT FORMED U-BOLT FOR [illegible] PIPE~~	~~[illegible]~~
56	1" SCH 160	SA-312-TP316 w/ 0.030% max. C		CONNECTING PIPE, LENGTH A/R	1
57	1" SCH 160	SA-312-TP316 w/ 0.030% max. C		CONNECTING PIPE, LENGTH A/R	1
58	~~[illegible] SCH 160~~	~~SA-312-TP316 w/ 0.030% max. C~~		~~INTERNAL PIPING SUPPORT~~	~~[illegible]~~

DELETE LINE ITEMS 46, 49, 54, 55, 58 BY RPP-WTP

NOTE ITEM 49 IS DELETED AS REQUIRED.

ADD ITEM 59, BY RPP-WTP

ADD ITEM 60, BY RPP-WTP

(2) (1) (1A) CONNECTION SCHEDULE

MK	SIZE	NECK MATERIAL	NECK THK	HEAT NO.	DESCRIPTION	ELEV. "Z"	ELEV. "X"	RADIUS FROM CENTER	TYPE	CONN. THK
N05	2" OD	MACHINED SA-182-F316 w/ 0.030% max. C	SPCL		TEMPERATURE (1A)	301⅞"	32⅝"	30"	STUB	¾" SCH 10
N06	6" NPS	SEAMLESS SA-312-TP316 w/ 0.030% max. C	SCH 80		INSTRUMENTATION	304"	54"	30"	STUB	NA
N06A	1" NPS	SEAMLESS SA-312-TP316 w/ 0.030% max. C	SCH 160		BALANCE	314"	59"	30"	STUB	1" SCH 40
N06B	1" NPS	SEAMLESS SA-312-TP316 w/ 0.030% max. C	SCH 160		DENSITY	315"	60"	30"	STUB	1" SCH 40
N06C	1" NPS	SEAMLESS SA-312-TP316 w/ 0.030% max. C	SCH 160		LEVEL	316"	61"	30"	STUB	1" SCH 40
N07	2" NPS	~~SEAMLESS [illegible] w/ 0.030% max. C~~	~~[illegible]~~	SCH 160	INLET	295"	45"	60"	STUB	2" SCH 40
N09	2" NPS	SEAMLESS SA-312-TP316 w/ 0.030% max. C	SCH 80		INLET	307"	52"	30"	STUB	2" SCH 40
N10	2" NPS	~~SEAMLESS [illegible] w/ 0.030% max. C~~	~~[illegible]~~	SCH 160	INLET	305"	50"	34"	STUB	2" SCH 40
N11	2" NPS	SEAMLESS SA-312-TP316 w/ 0.030% max. C	SCH 80		INLET/AIR PURGE	305"	48"	45"	STUB	2" SCH 40
N12	2" OD	MACHINED SA-182-F316 w/ 0.030% max. C	SPCL		AIR/VAC TO UFP-VSL-00057	291"	56"	72"	STUB	1" SCH 40
N13	2" OD	MACHINED SA-182-F316 w/ 0.030% max. C	SPCL		OUTLET/SAMPLE (UFP-RFD-00034)	307"	52"	30"	STUB	1" SCH 40
N14	2" NPS	SEAMLESS SA-312-TP316 w/ 0.030% max. C	SCH 80		SAMPLE RETURN	305"	50"	34"	STUB	2" SCH 40
N16	2" NPS	SEAMLESS SA-312-TP316 w/ 0.030% max. C	SCH 160		AIR/VAC TO UFP-FJM-00039	298"	48"	60"	STUB	2" SCH 40
N17	2" NPS	SEAMLESS SA-312-TP316 w/ 0.030% max. C	SCH 160		OUTLET TO EJECTOR	NA	NA	NA	STUB	2" SCH 40
N18	2" NPS	SEAMLESS SA-312-TP316 w/ 0.030% max. C	SCH 160		AIR/VAC TO UFP-FJM-00040	303"	48"	45"	STUB	2" SCH 40
N19	2" NPS	SEAMLESS SA-312-TP316 w/ 0.030% max. C	SCH 160		AIR/VAC TO UFP-FJM-00041	298"	45"	60"	STUB	2" SCH 40
N20	2" NPS	SEAMLESS SA-312-TP316 w/ 0.030% max. C	SCH 160		AIR/VAC TO UFP-FJM-00042	303"	48"	45"	STUB	2" SCH 40
N21	2" NPS	SEAMLESS SA-312-TP316 w/ 0.030% max. C	SCH 160		AIR/VAC TO PHD-FJM-00043 (1A)	297¼"	42⅝"	60"	STUB	2" SCH 40
N22	6" NPS	SEAMLESS SA-312-TP316 w/ 0.030% max. C	SCH 80		OUTLET/VESSEL VENT (1A)	304⅝"	54⅝"	CENTER	STUB	6" SCH 10
N23	3" NPS	SEAMLESS SA-312-TP316 w/ 0.030% max. C	SCH 80		AIR/VAC TO UFP-VSL-00028	291"	56"	72"	STUB	3" SCH 40
N24	3" NPS	SEAMLESS SA-312-TP316 w/ 0.030% max. C	SCH 80		AIR/VAC TO UFP-VSL-00086 (1A)	290⅝"	55⅝"	72"	STUB	3" SCH 40
N25	3" NPS	SEAMLESS SA-312-TP316 w/ 0.030% max. C	SCH 80		AIR/VAC TO UFP-VSL-00075 (1A)	292⅝"	57⅝"	84"	STUB	3" SCH 40
N26	3" NPS	SEAMLESS SA-312-TP316 w/ 0.030% max. C	SCH 80		AIR/VAC TO UFP-VSL-00051	293"	58"	84"	STUB	3" SCH 40
N28	4" NPS	SEAMLESS SA-312-TP316 w/ 0.030% max. C	SCH 80		OUTLET FROM UFP-RFD-00033	304"	54"	12"	STUB	4" SCH 40
N29	4" NPS	SEAMLESS SA-312-TP316 w/ 0.030% max. C	SCH 80		OUTLET FROM UFP-RFD-00034 (1A)	308⅝"	58⅝"	12"	STUB	4" SCH 40
N30	4" NPS	SEAMLESS SA-312-TP316 w/ 0.030% max. C	SCH 80		OUTLET FROM UFP-RFD-00032	308"	58"	16"	STUB	4" SCH 40
N32	4" NPS	SEAMLESS SA-312-TP316 w/ 0.030% max. C	SCH 80		OUTLET FROM UFP-RFD-00031	308"	58"	16"	STUB	4" SCH 40
N34	2" NPS	SEAMLESS SA-312-TP316 w/ 0.030% max. C	SCH 80		INLET TO WASH RING (1A)	292⅞"	57⅞"	70"	STUB	2" SCH 40
N35	2" NPS	SEAMLESS SA-312-TP316 w/ 0.030% max. C	SCH 80		INLET TO WASH RING	293"	58"	70"	STUB	2" SCH 40
N36	2" NPS	~~SEAMLESS [illegible] w/ 0.030% max. C~~	~~[illegible]~~	SCH 160	INLET TO WASH RING	293"	58"	70"	STUB	2" SCH 40
N37	6" NPS	SEAMLESS SA-312-TP316 w/ 0.030% max. C	SCH 80		OUTLET/OVERFLOW	NA	NA	NA	STUB	6" SCH 10
N38	2" NPS	SEAMLESS SA-312-TP316 w/ 0.030% max. C	SCH 80		SPARE (1A)	307½"	52½"	16"	STUB	CAPPED
N39	24" OD	WELDED SA-240-316 w/ 0.030% max C	½"		MANWAY (TACKED CAP)	300"	45"	60"	STUB	CAPPED
N40	3" NPS	SEAMLESS SA-312-TP316 w/ 0.030% max. C	SCH 80		INLET	307"	52"	30"	STUB	3" SCH 40
N41	2" NPS	SEAMLESS SA-312-TP316 w/ 0.030% max. C	SCH 160		AIR/VAC TO UFP-FJM-00051	303"	48"	45"	STUB	2" SCH 40
N44	4" NPS	SEAMLESS SA-312-TP316 w/ 0.030% max. C	SCH 80		OUTLET FROM UFP-RFD-00047	304"	54"	12"	STUB	4" SCH 40
N45	3" NPS	SEAMLESS SA-312-TP316 w/ 0.030% max. C	SCH 80		AIR/VAC TO UFP-VSL-00088	293"	58"	84"	STUB	3" SCH 40
N46	2" NPS	SEAMLESS SA-312-TP316 w/ 0.030% max. C	SCH 80		FORCED AIR PURGE	303"	50"	34"	STUB	2" SCH 40

GENERAL NOTES and SPECIAL REQUIREMENTS

1. NWC Quality Assurance Manual ASME NQA-1 applies in its entirety for this project.
2. All material, including weld wire, for this project shall be purchased from approved Level 3 & 4 suppliers.
3. All 316SS material, including weld wire, shall be PMI tested and approved prior to use.
4. No deviations from this drawing is allowed without Bechtel approval.
5. The base of the vessel support skirt and ring beam shall be marked after shop assembly, using a line of welding bead, at the 0° Orientation as shown on the drawing. Skirt base to be suitably reinforced prior to shipment.
6. A datum line shall be marked on the heads with low stress stamping 2" away from the head/shell seam.
7. Contact materials shall be approved prior to use. This is to include marking material, lubricants, tape, anti-spatter spray, harmful metals or salts such as zinc, lead, or copper, etc. Total halogens in the contact materials shall be less than 200 ppm.
8. Fabrication tolerance shall be in accordance with Bechtel drawing Pressure Vessel Tolerances Standard Details DWG. # 24590-WTP-MV-M59T-00001.
9. Plate 3/8" and over in thickness shall not be sheared to size. All lubricants, burrs, and debris shall be removed after cutting.
10. Internal piping bends shall have a center line radius of four times the pipe nominal diameter. A pipe shall not be terminated or butt-welded within 4" of the bend.
11. Longitudinal seams shall be completed and have successfully passed any NDE prior to welding any adjoining circumferential seams.
12. Manway cover head shall be prepared for field welding, tacked into place with 4 @ ½" long tacks 90° apart, sealed to prevent dirt and water entry, and marked with the item number.
13. Nozzles shall be prepared for field welding, shall be covered with a hard rubber or plastic cap, and shall be sealed to prevent dirt or water entry.
14. All attachments e.g. lugs, brackets, nozzles and other members shall follow the contour of the surface to which they will be attached. The gap at the exposed edges shall not exceed 1/16" prior to welding.
15. All attachments that use only fillet welds shall have a maximum gap of 1/8" between the components being joined.
16. All temporary attachments shall be 316 stainless steel.
17. All temporary attachments shall be removed prior to hydrostatic test.
18. PMI to be performed on all pressure retaining items including welds after fabrication.

UT per ASME Section VIII Div. I Appendix 12 (4)

1. The shell and head sections under the lifting lugs, tailing lugs, and internal vessel supports shall be ultrasonically examined over 100% of the area that extends 5" beyond each side of the perimeter of the proposed fillet weld attachment to the shell or head.
2. All welds attaching internal or external components to the shell or heads shall be ultrasonically examined. This examination does not include nozzle to vessel wall welds.
3. All shell and head sections for 3" around nozzle penetrations shall be ultrasonically examined prior to welding.
4. All nozzle welds to the shell or head with internal projection shall be ultrasonically examined.

PT per ASME Section VIII Div. I Appendix 8 (1A) (3) (4)

1. All welds over 3/4" in 304 & 316 series Stainless Steel shall be dye penetrant examined.

CHANGE TO UW-51 BY RPP-WTP

RT per ASME Section VIII Div. I ~~Appendix 4~~ (1A) (3) (4)

1. All butt welds in the shell shall be 100% radiographically examined.
2. All nozzle welds to the shell or head without internal projection shall be radiographically examined.
3. Butt welds in internal piping shall be radiographically examined. This does not include internal pipe supports and braces.
4. All butt welds in the nozzle necks shall be radiographically examined.
5. All thermowell socket welds shall be radiographically examined.

OPERATING: 512,285 lbs
FULL WATER: 401,100 lbs
EMPTY: 103,000 lbs
BY RPP-WTP

Helium Leak Test

1. All thermowell socket welds shall be helium leak tested.

(4) PLANT ITEM NO.: UFP-VSL-00062B (3) (1A)

24590-PTF-MV-UFP-VSL-00062B

SUPPLIER DOCUMENT STATUS

1. [X] Work may proceed.
2. [ ] Revise and resubmit. Work may proceed subject to resolution of indicated comments.
3. [ ] Revise and resubmit. Work may not proceed.
4. [ ] Review not required. Work may proceed.

REVIEWED

G-321 Document Category 1.1

Accepted by: H. KHURANA [signature] 11/13/05

REVISIONS

NO	DESCRIPTION	REV BY	APPD BY	DATE
5	UPDATED RADIOGRAPH SPEC REFERENCE	SMT	MJV	11/05/04
4	REVISED PER CUSTOMER COMMENTS AND ENGINEERING CHANGES	SMT	MJV	11/05/04
3	REVISED PER CUSTOMER COMMENTS AND ENGINEERING CHANGES	SMT	MJV	08/07/04
2	REVISED PER CUSTOMER COMMENTS AND ENGINEERING CHANGES	MDH	MJV	04/03/03
1A	REVISED PER CUSTOMER COMMENTS AND ENGINEERING CHANGES	MDH	MJV	07/18/03
1	REVISED PER CUSTOMER COMMENTS & ENGINEERING CHANGES	MJV	MDH	04/28/03

ESTIMATED WEIGHT: (IN LBS)
OPERATING - ~~[illegible]~~
FULL WATER - ~~[illegible]~~
EMPTY - ~~[illegible]~~

NORTHWEST COPPER WORKS, INC.
1505 N. RIVER STREET * PORTLAND, OREGON * 97227

180" I.D. ULTRAFILTER PERMEATE COLLECTION VESSEL

BECHTEL NATIONAL INC.
3000 George Washington Way
Richland, Washington 99352

EQUIP. NO. UFP-VSL-00062B	P.O. NO. 24590-QL-POD-MVA0-00001 REV 0	
SCALE AS NOTED	JOB NO. 3006	DWG. NO. D- 3006 / REV 5
DATE 01/17/03	CHKD. BY KRT	
DWN. BY MDH	APPD. BY MDH	SHT. NO. 1 OF 8

BECHTEL NATIONAL INC. FOR D.O.E.
RIVER PROTECTION PROJECT IN RICHLAND, WA ~~REF. DWG 24590-PTF-MV-UFP-00008 REV 0~~ BECHTEL DOC. 24590-QL-POD-MVA0-00001-03-04 REV. 00EF

DELETED BY RPP-WTP

P:\Swap\ACAD\03\D3006-5 Mon Dec 06 09:43:59 2004

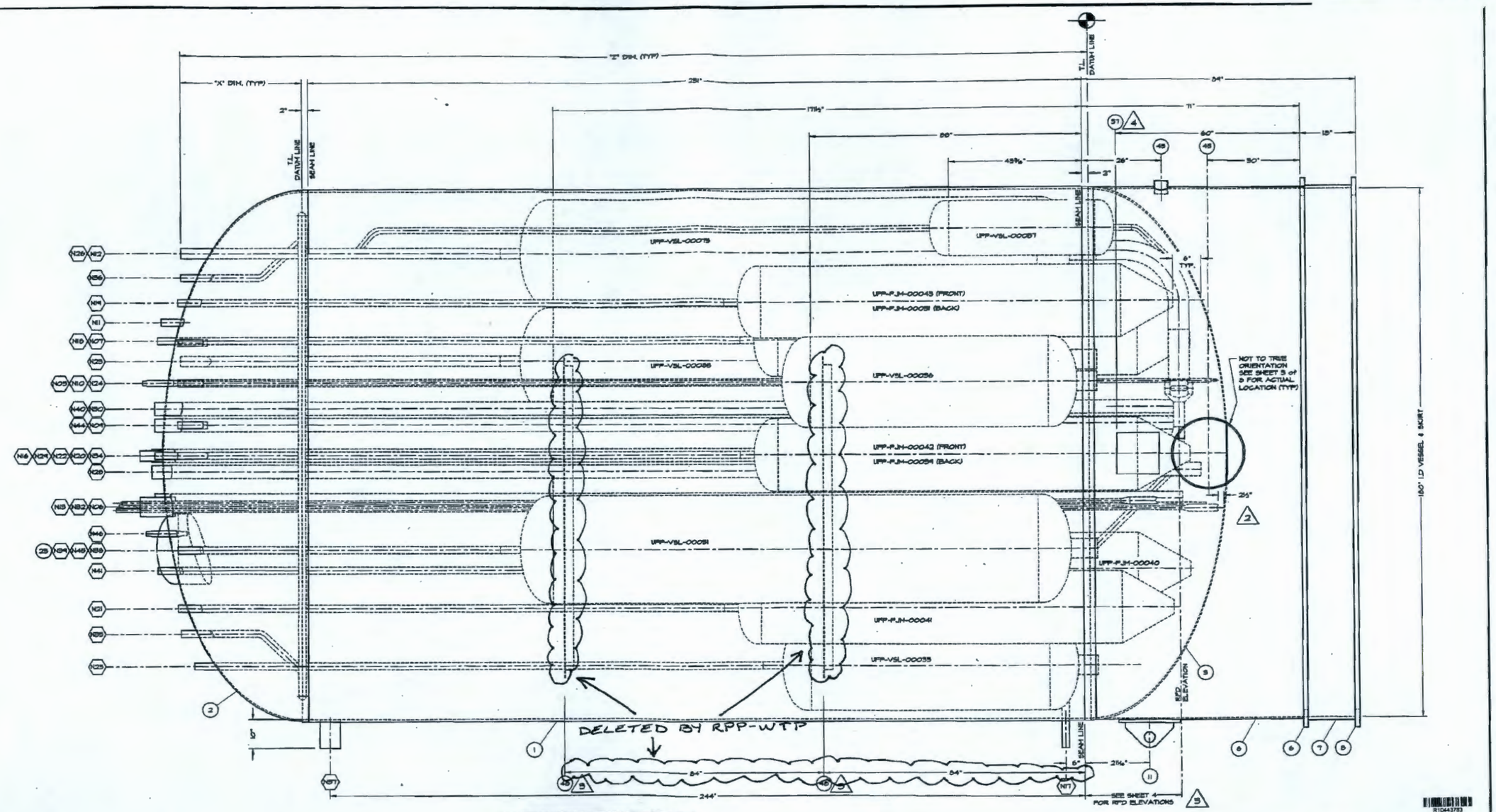

VESSEL ELEVATION
SCALE: ⅛" = 1'-0"

Some information on page this may appear to be illegible, however, the information necessary is legible.

24590-PTF-MV-UFP-VSL-00026

Bechtel National, Inc. — Job No. 24590
SUPPLIER DOCUMENT STATUS
1. "Work may proceed."
2. "Revise and resubmit. Work may proceed subject to resolution of indicated comments."
3. "Revise and resubmit. Work may not proceed."
4. "Review not required. Work may proceed."
Permission to proceed does not constitute acceptance or approval of design details, calculations, analyses, test methods, or materials developed or selected by the supplier and does not relieve supplier from full compliance with contractual obligations.

REVIEWED: JA / PE

O-321 Document Category: I-1
(Place Acceptance A in O-321.5 (E) or O-321.9 (T), as applicable, or "N/A" if 321.3 is used)

Responsible BNI Engineer No.:
(When applicable)

Accepted by: H. KHURANA — 01/13/05

Released by: (When applicable)

REVISIONS

NO	DESCRIPTION	REV BY	APD BY	DATE
5	NO CHANGES	SHT	HJV	12/06/04
4	ADDED NAMEPLATE ELEVATION	SHT	HJV	11/05/04
3	REVISED PER CUSTOMER COMMENTS AND ENGINEERING CHANGES	SHT	HJV	06/07/04
2	REVISED PER CUSTOMER COMMENTS AND ENGINEERING CHANGES	HDH	HJV	04/05/03
1A	REVISED PER CUSTOMER COMMENTS AND ENGINEERING CHANGES	HDH	HJV	01/15/03
1	REVISED PER CUSTOMER COMMENTS & ENGINEERING CHANGES	HJV	HDH	04/25/02

NORTHWEST COPPER WORKS, INC.
1503 N. RIVER STREET * PORTLAND, OREGON * 97227

180" I.D. ULTRAFILTER
PERMEATE COLLECTION VESSEL ELEVATION

BECHTEL NATIONAL, INC.
3000 George Washington Way
Richland, Washington 99352

EQUIP. NO. UFP-VSL-00062B
P.O. NO. 24590-ELPOD-MVAO-00003 REV 0
SCALE ⅛" = 1'-0"
JOB NO. 3006
DWG. NO. D-3006
REV 5
DATE 01/7/03
CHKD. BY KRT
DWN. BY HDH
APPD. BY HDH
SHT. NO. 2 OF 8

~~REF. DWG 24590-PTF-MV-UFP-00000-REV 0~~
BECHTEL DOC. 24590-QL-POD-MVAO-00001-03-03 REV. 00&F
DELETED, BY RPP-WTP

P:\Swep\ACAD\03\03006-5 Mon Dec 06 09:43:47 2004

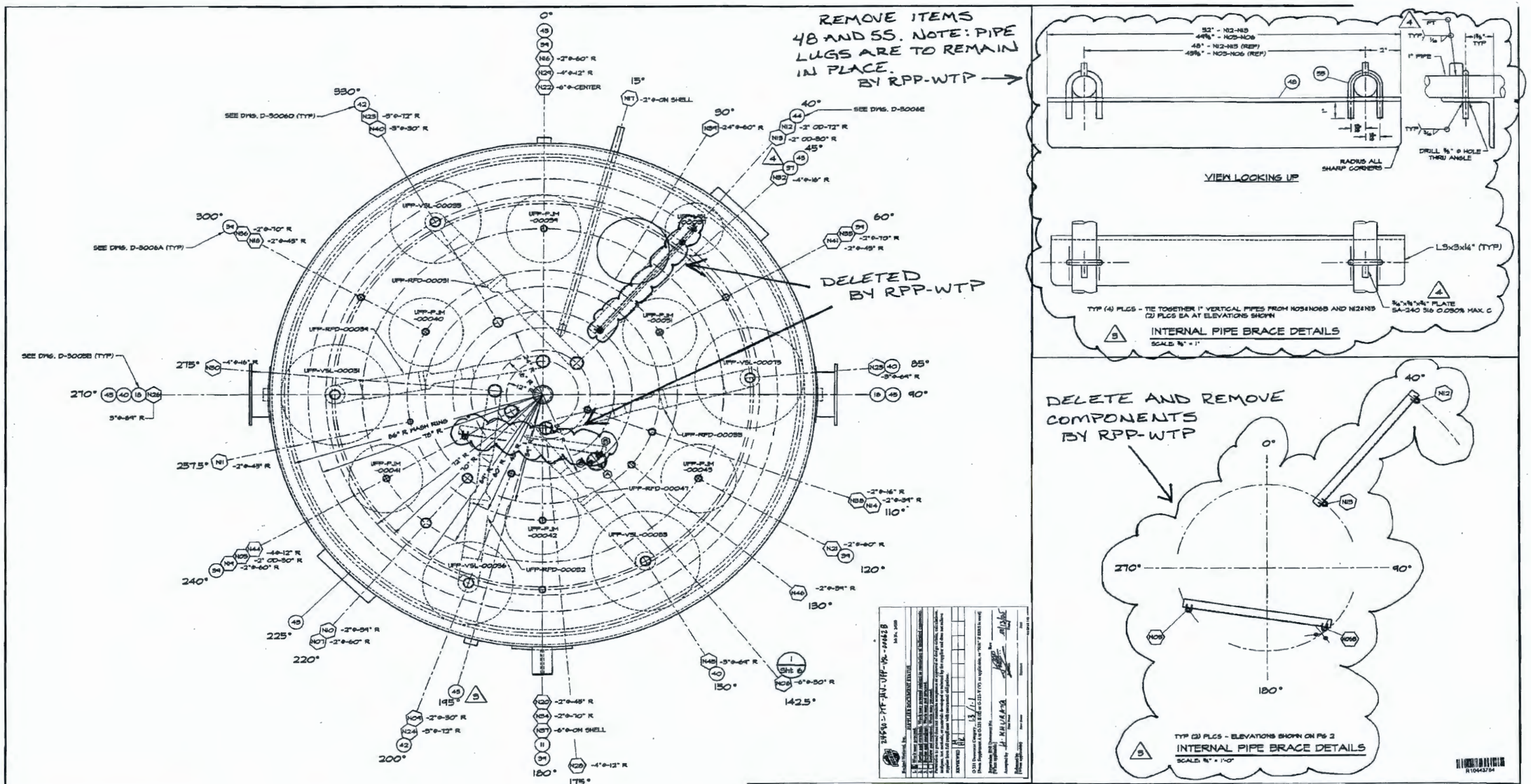

Some information on page this may appear to be illegible, however, the information necessary is legible.

REVISIONS				
5	NO CHANGES	SHT	HJV	12/08/04
4	REVISED PER CUSTOMER COMMENTS AND ENGINEERING CHANGES	SHT	HJV	11/05/04
3	REVISED PER CUSTOMER COMMENTS AND ENGINEERING CHANGES	SHT	HJV	08/07/04
2	REVISED PER CUSTOMER COMMENTS AND ENGINEERING CHANGES	MDH	HJV	04/28/03
1A	REVISED PER CUSTOMER COMMENTS AND ENGINEERING CHANGES	MDH	HJV	07/18/03
1	REVISED PER CUSTOMER COMMENTS & ENGINEERING CHANGES	HJV	MDH	04/22/03
NO	DESCRIPTION	REV BY	APP BY	DATE

NORTHWEST COPPER WORKS, INC.
1303 N. RIVER STREET • PORTLAND, OREGON • 97227

180" I.D. ULTRAFILTER
PERMEATE COLLECTION VESSEL PLAN

BECHTEL NATIONAL INC.
3000 George Washington Way
Richland, Washington 99352

EQUIP. NO. UFP-VSL-00062B			
P.O. NO. 24590-QL-POD-HVAO-00003 REV 0			
SCALE ⅜" = 1'-0"	JOB NO. 3006	DWG. NO. D- 3006	REV 5
DATE 01/7/03	CHKD. BY KRT		
DWN. BY MDH	APPD. BY MDH	SHT. NO. 3 OF 8	

DELETED BY RPP-WTP

REF: DWG 24590-PTF-HV-UFP-00006 REV 00
BECHTEL DOC. 24590-QL-POD-HVAO-00001-03-06 REV. 00 & F

P:\Snap\ACAD\03\D3006-5 Mon Dec 06 09:43:38 2004

DELETED BY RPP-WTP

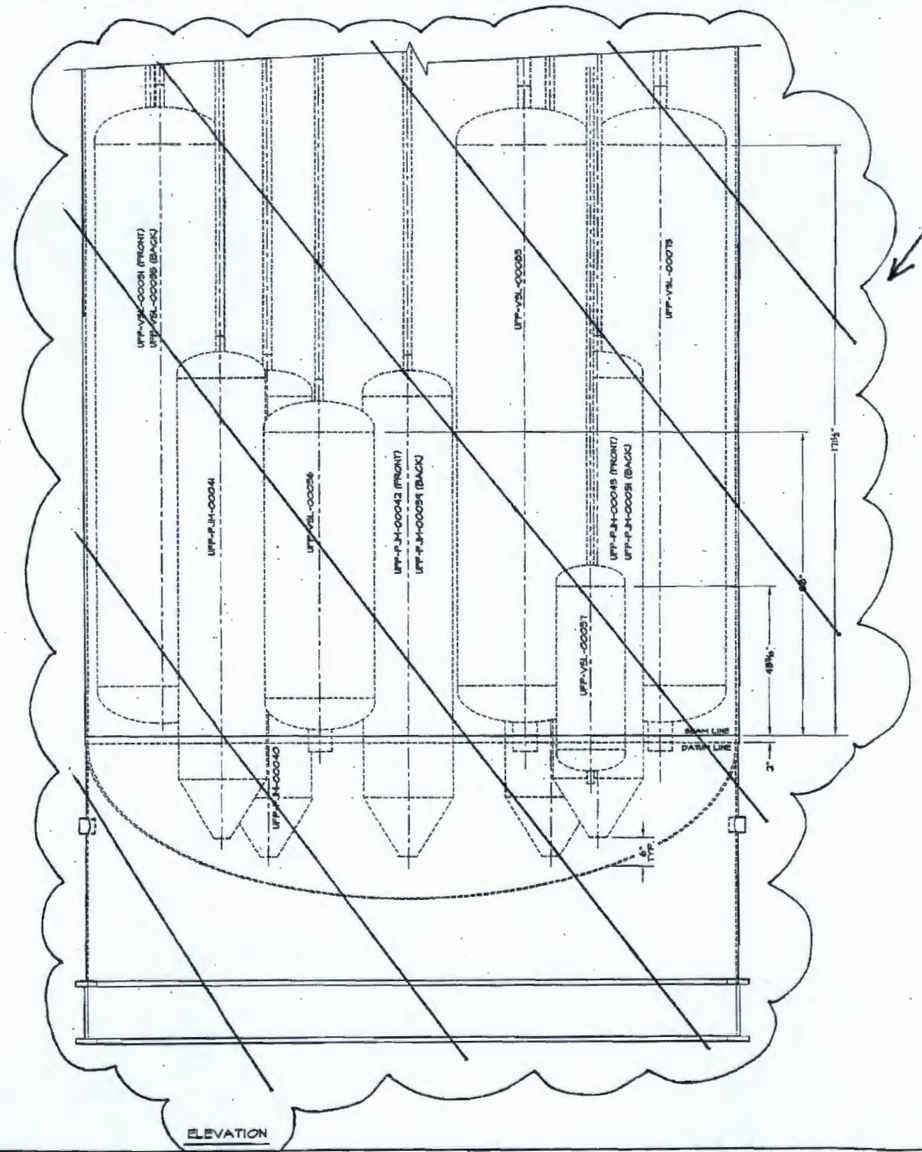

ELEVATION

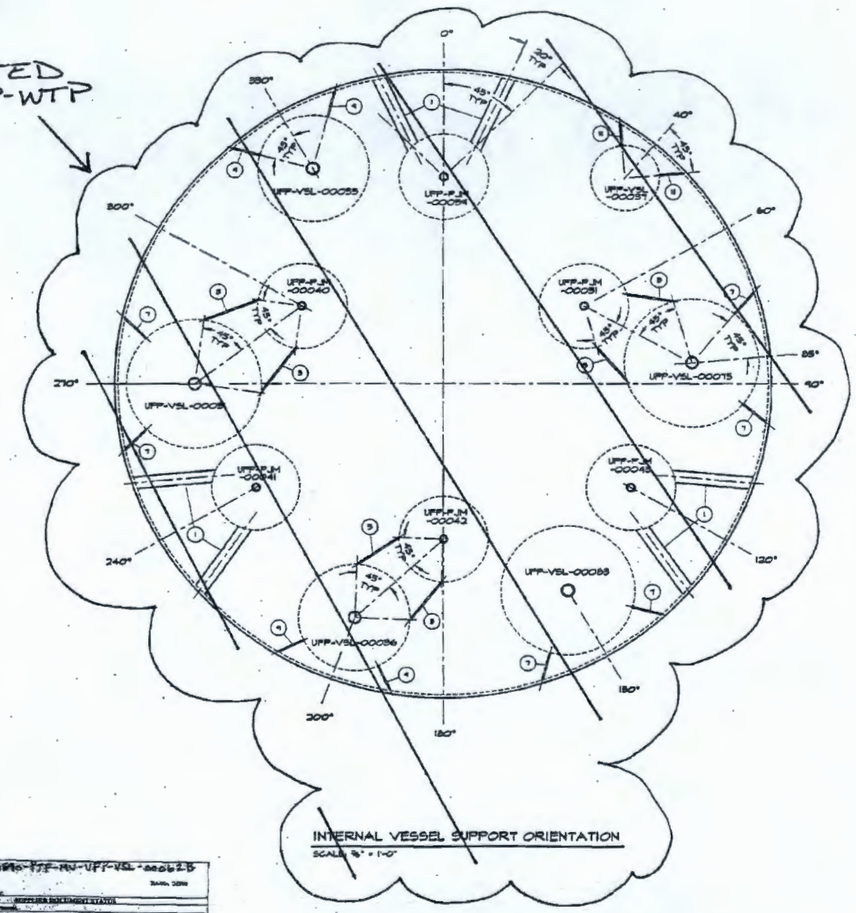

INTERNAL VESSEL SUPPORT ORIENTATION
SCALE: ¾" = 1'-0"

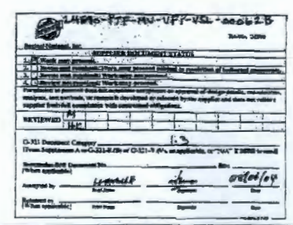

Some information on page this may appear to be illegible, however, the information necessary is legible.

BILL OF MATERIALS

MK	THICK/SIZE	MATERIAL	HEAT NO.	DESCRIPTION	QTY
1	4" SCH 40	WELDED SA-312-TP316 W/ 0.030% max. C		OUTER PULSE JET MIXER SUPPORT PIPE	12
2					
3	½"	SA-240-316 W/ 0.030% max. C		INNER PULSE JET MIXER SUPPORT PLATE (@ 36" CV)	8
4					
5	½"	SA-240-316 W/ 0.030% max. C		INNER PULSE JET MIXER SUPPORT PLATE (@ 30" CV)	4
6					
7	½"	SA-240-316 W/ 0.030% max. C		36" CHARGE VESSEL SUPPORT PLATE	12
8					
9	½"	SA-240-316 W/ 0.030% max. C		30" CHARGE VESSEL SUPPORT PLATE	4
10					
11	½"	SA-240-316 W/ 0.030% max. C		18" CHARGE VESSEL SUPPORT PLATE	2

CONSTRUCTION NOTES

NOTE 2: WHERE PLATE MATERIAL IS SPECIFIED AS ASME SA240, ASME SA479 MATERIAL MAY BE SUBSTITUTED.

ADD NOTE, BY RPP-WTP

REVISIONS

NO	DESCRIPTION	REV BY	APD BY	DATE
2	REVISED PER ENGINEERING CHANGES	SMT	MDH	06/07/04
1	REVISED PER CUSTOMER COMMENTS	MJV	MDH	04/03/03

TYPO, CHANGE TO POD BY RPP-WTP

NORTHWEST COPPER WORKS, INC.
1903 N. RIVER STREET • PORTLAND, OREGON • 97227

180" I.D. ULTRAFILTER PERMEATE VESSEL INTERNAL SUPPORT

BECHTEL NATIONAL INC.
3000 George Washington Way
Richland, Washington 99352

EQUIP. NO. UFP-VSL-00062B
P.O. NO. 3850-2-POP-MAO-0003 REV 0

SCALE AS NOTED	JOB NO. 3006F	DWG. NO. D-3006F	REV 2
DATE 05/06/03	CHKD. BY MDH		
DWN. BY MJV	APPD. BY MJV	SHT. NO. 1 OF 2	

BECHTEL DOC. No. 24590-PTF-MVAO-0000-02-42 REV. 002 → POD

P:\Swap\ACAD\03\D3006F-2.dwg, 6/7/2004 4:12:27 PM

R10335613

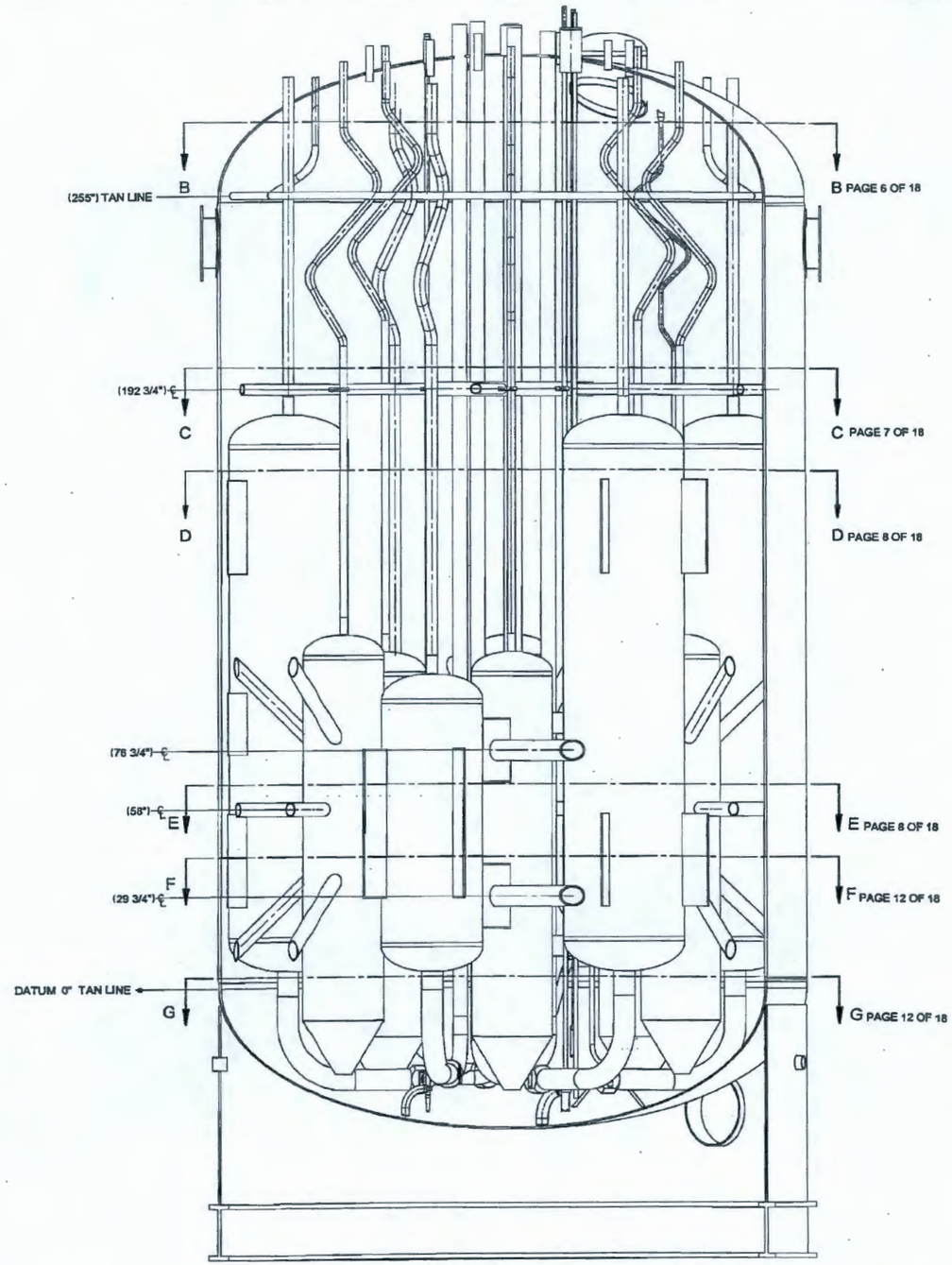

NORTH ELEVATION

BILL OF MATERIALS

MK	THICK/SIZE	MATERIAL	HEAT NO.	DESCRIPTION	QTY
12	3" SCHED 80S	SA 312 TP 316/316L 0.030% MAX C		SMLS PIPE, THERMAL EXPANSION S-BEND	2
13	2" SCHED 80S	SA 312 TP 316/316L 0.030% MAX C		SMLS PIPE, THERMAL EXPANSION S-BEND	6
14	1" SCHED 80S	SA 312 TP 316/316L 0.030% MAX C		SMLS PIPE, THERMAL EXPANSION S-BEND	1
15	4" SCHED 80S	SA 312 TP 316/316L 0.030% MAX C		SMLS PIPE, CENTER SUPPORT	1
16	3" SCHED 80S	SA 312 TP 316/316L 0.030% MAX C		SMLS PIPE, RADIAL SUPPORT	6
		NOT USED			
		NOT USED			
19	3/4"X 6 1/4"	SA 240 TP 316/316L 0.030% MAX C		PLATE, 4" GUIDE RING SUPPORT	2
20	3/4"X 6 1/4"	SA 240 TP 316/316L 0.030% MAX C		PLATE, 4" GUIDE RING SUPPORT	3
21	3/4"X 1"	SA 240 TP 316/316L 0.030% MAX C		PLATE, 4" GUIDE RING	15
22	1/2"X 1"	SA 240 TP 316/316L 0.030% MAX C		PLATE, 2" GUIDE RING	7
23	1"X 3 5/8"	SA 240 TP 316/316L 0.030% MAX C		PLATE, 2" GUIDE RING SUPPORT	3
24	1"X 3 5/8"	SA 240 TP 316/316L 0.030% MAX C		PLATE, 2" GUIDE RING SUPPORT	2
		NOT USED			
26	1"X 3 5/8"	SA 240 TP 316/316L 0.030% MAX C		PLATE, 2" GUIDE RING SUPPORT	1
		NOT USED			
28	1/2"X 2 1/2"	SA 240 TP 316/316L 0.030% MAX C		PLATE, 1" GUIDE RING SUPPORT	1
29	1/2"X 1"	SA 240 TP 316/316L 0.030% MAX C		PLATE, 1" GUIDE RING	13
30	1/2"X 2 1/2"	SA 240 TP 316/316L 0.030% MAX C		PLATE, 1" GUIDE RING SUPPORT	2
31	3" SCHED 80S	SA 312 TP 316/316L 0.030% MAX C		SMLS PIPE	3
32	1/2"	SA 240 TP 316/316L 0.030% MAX C		PLATE, Ø 3 1/2"	3
33	1"X 1"X 2 1/2"	SA 240 TP 316/316L 0.030% MAX C		PLATE	3
34	6" SCHED 80S	SA 312 TP 316/316L 0.030% MAX C		SMLS PIPE, KICKER SUPPORT	4
35	1/2" MIN	SA 240 TP 316/316L 0.030% MAX C		KICKER SUPPORT PLATE	8
36	4" SCHED 80S	SA 312 TP 316/316L 0.030% MAX C		SMLS PIPE, OUTER PJM SUPPORT	6
37	1/2" MIN	SA 240 TP 316/316L 0.030% MAX C		36" CHARGE VESSEL SUPPORT PLATE	4
38	2" SCHED 160S	SA 312 TP 316/316L 0.030% MAX C		SMLS PIPE	1
39	1/2"X 2 3/4"X 2 3/4"	SA 240 TP 316/316L 0.030% MAX C		PLATE	1
40	3" SCHED 160S	SA 312 TP 316/316L 0.030% MAX C		SMLS PIPE	1
41	1/2"X 3 7/8"X 3 7/8"	SA 240 TP 316/316L 0.030% MAX C		PLATE	1
42	6" SCHED 80S	SA 312 TP 316/316L 0.030% MAX C		SMLS PIPE, CENTER PJM SUPPORT	2
43	6" SCHED 80S	SA 312 TP 316/316L 0.030% MAX C		SMLS PIPE, CENTER PJM SUPPORT	4
44	4" SCHED 80S	SA 312 TP 316/316L 0.030% MAX C		SMLS PIPE, CENTER PJM SUPPORT	2
45	4" SCHED 80S	SA 312 TP 316/316L 0.030% MAX C		SMLS PIPE, CENTER PJM SUPPORT	2
46	4" SCHED 80S	SA 312 TP 316/316L 0.030% MAX C		SMLS PIPE, CENTER PJM SUPPORT	4
47	1"X 6 1/4"	SA 240 TP 316/316L 0.030% MAX C		PLATE, 4" GUIDE RING SUPPORT	2
48	1"X 6 1/4"	SA 240 TP 316/316L 0.030% MAX C		PLATE, 4" GUIDE RING SUPPORT	2
49	1"X 6 1/4"	SA 240 TP 316/316L 0.030% MAX C		PLATE, 4" GUIDE RING SUPPORT	4
50	1"X 6 1/4"	SA 240 TP 316/316L 0.030% MAX C		PLATE, 4" GUIDE RING SUPPORT	2
51	1"X 2 1/2"	SA 240 TP 316/316L 0.030% MAX C		PLATE, 1" GUIDE RING SUPPORT	1
52	1"X 2 1/2"	SA 240 TP 316/316L 0.030% MAX C		PLATE, 1" GUIDE RING SUPPORT	2
53	1"X 2 1/2"	SA 240 TP 316/316L 0.030% MAX C		PLATE, 1" GUIDE RING SUPPORT	2
54	1/2" MIN	SA 240 TP 316/316L 0.030% MAX C		KICKER SUPPORT PLATE	4
55	6" SCHED 80S	SA 312 TP 316/316L 0.030% MAX C		SMLS PIPE, KICKER SUPPORT PIPE	2

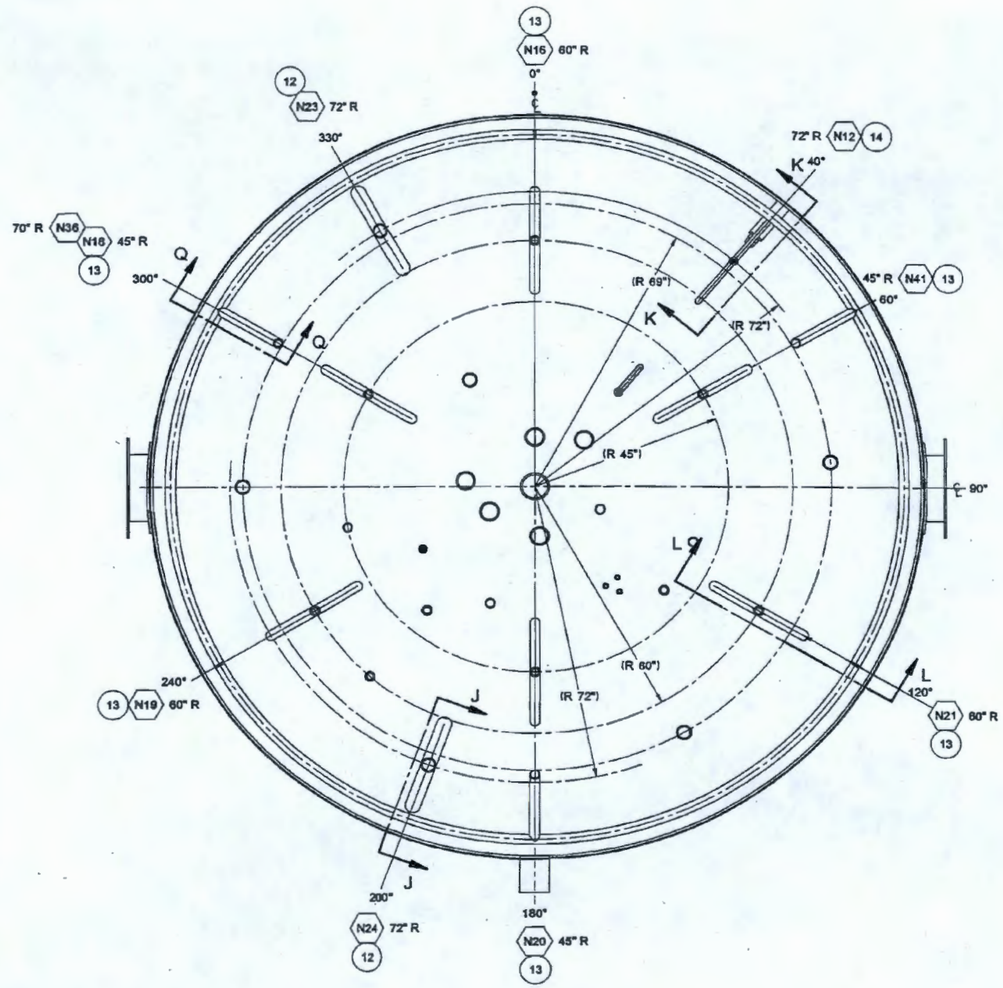

SECTION B-B
SCALE: 1/16

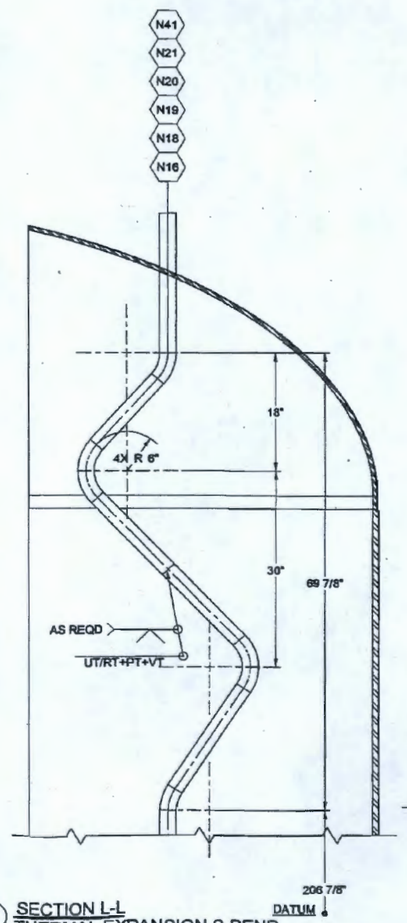

13 SECTION L-L
THERMAL EXPANSION S-BEND
SCALE: 1/10

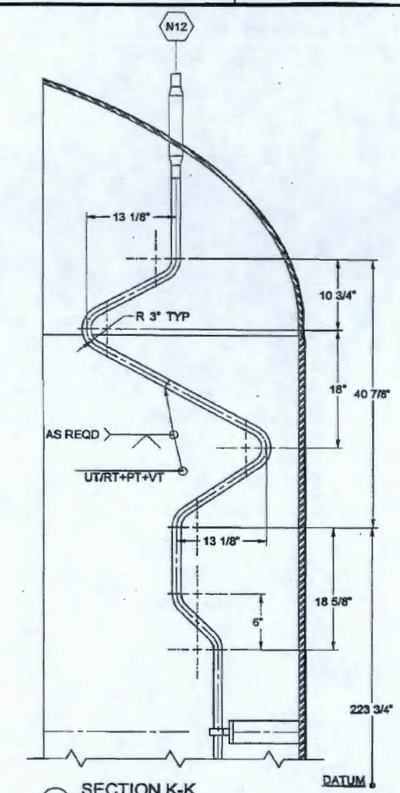

14 SECTION K-K
THERMAL EXPANSION S-BEND
SCALE: 1/10

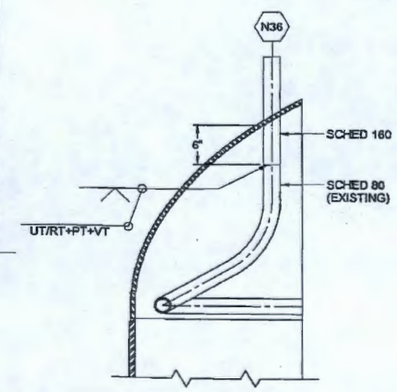

SECTION Q-Q
SCALE: 1/10

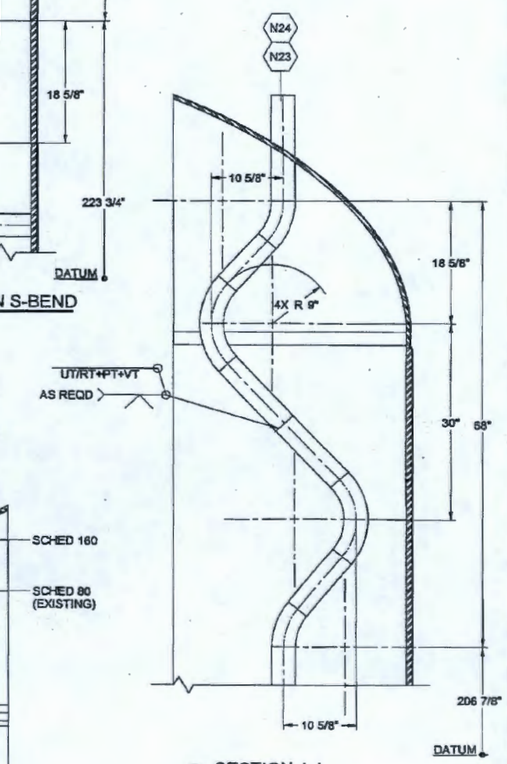

12 SECTION J-J
THERMAL EXPANSION S-BEND
SCALE: 1/10

NOTES:

1. GUIDE RINGS ARE WELDED AFTER CORRECTLY POSITIONING THE GUIDE RING SUPPORTS. GUIDE RINGS SHALL MAINTAIN .125 DIAMETRAL CLEARANCE WITH PIPE.

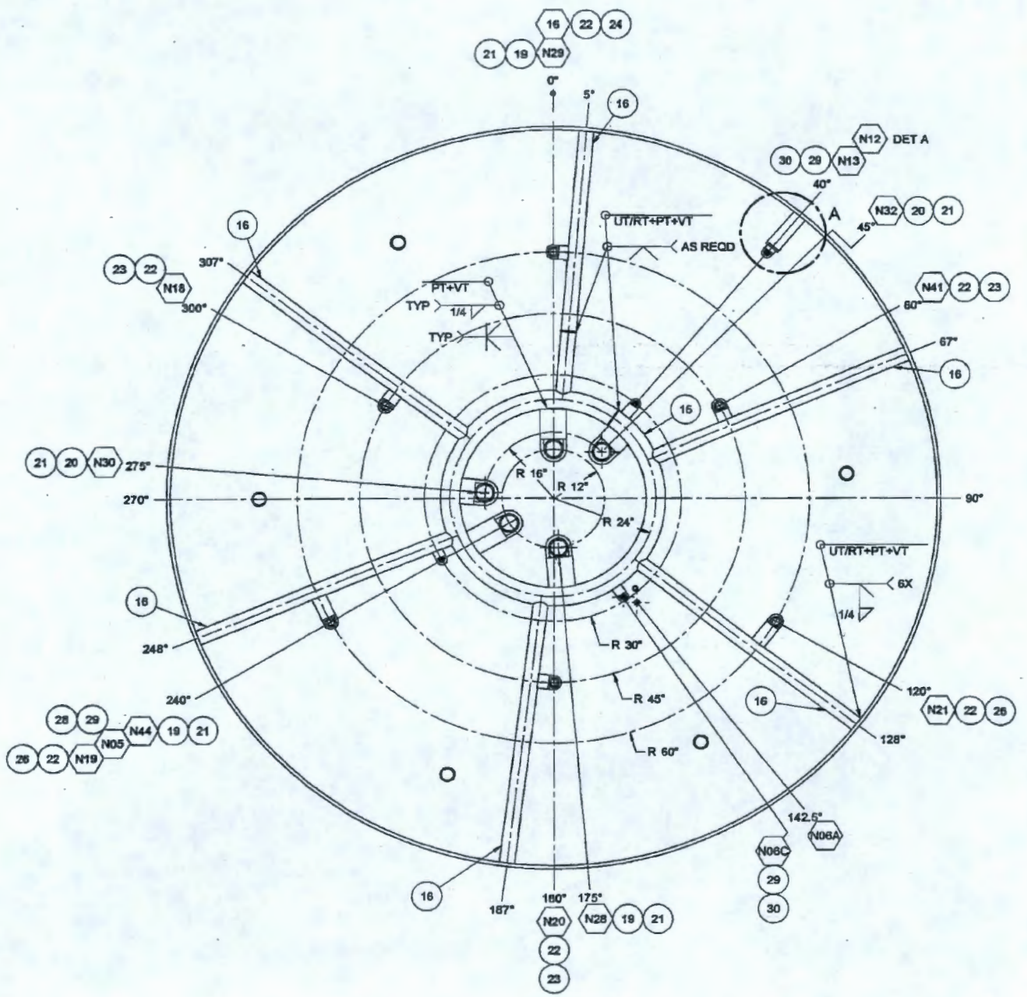

SECTION C-C
SCALE: 1/16

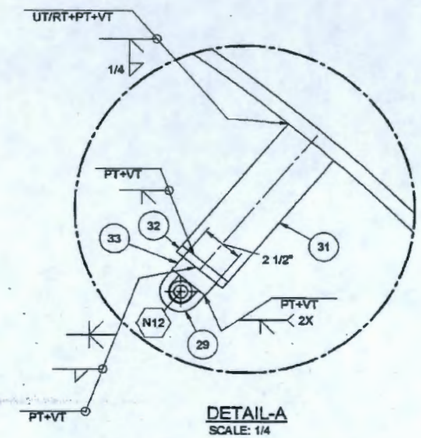

DETAIL-A
SCALE: 1/4

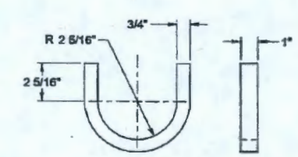

21 GUIDE RING
SCALE: 1/4

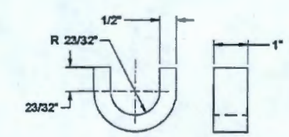

29 GUIDE RING
SCALE: 1/2

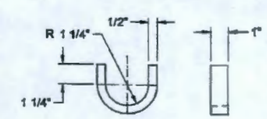

22 GUIDE RING
SCALE: 1/4

24590-PTF-VDCN-MS-10-00008

Attachment 1: Page 7 of 18

FORM D_MASTER 03/2003

3 SCREENING IS REQUIRED FOR DRAWING TYPES IDENTIFIED IN 24590-WTP-GPP-SREC-002

'D' SIZE - 34x22
COMPUTER GENERATED - MANUAL DESIGN CHANGES NOT PERMITTED

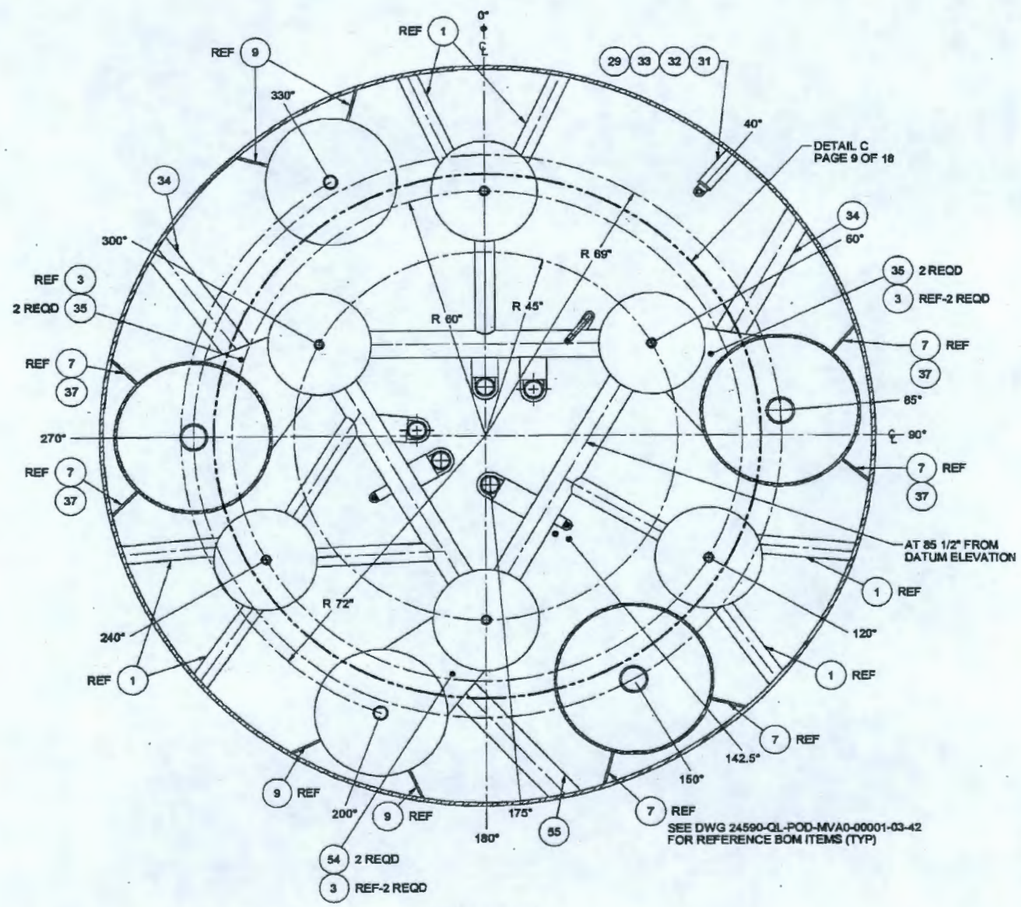

SECTION D-D
SCALE: 1/16

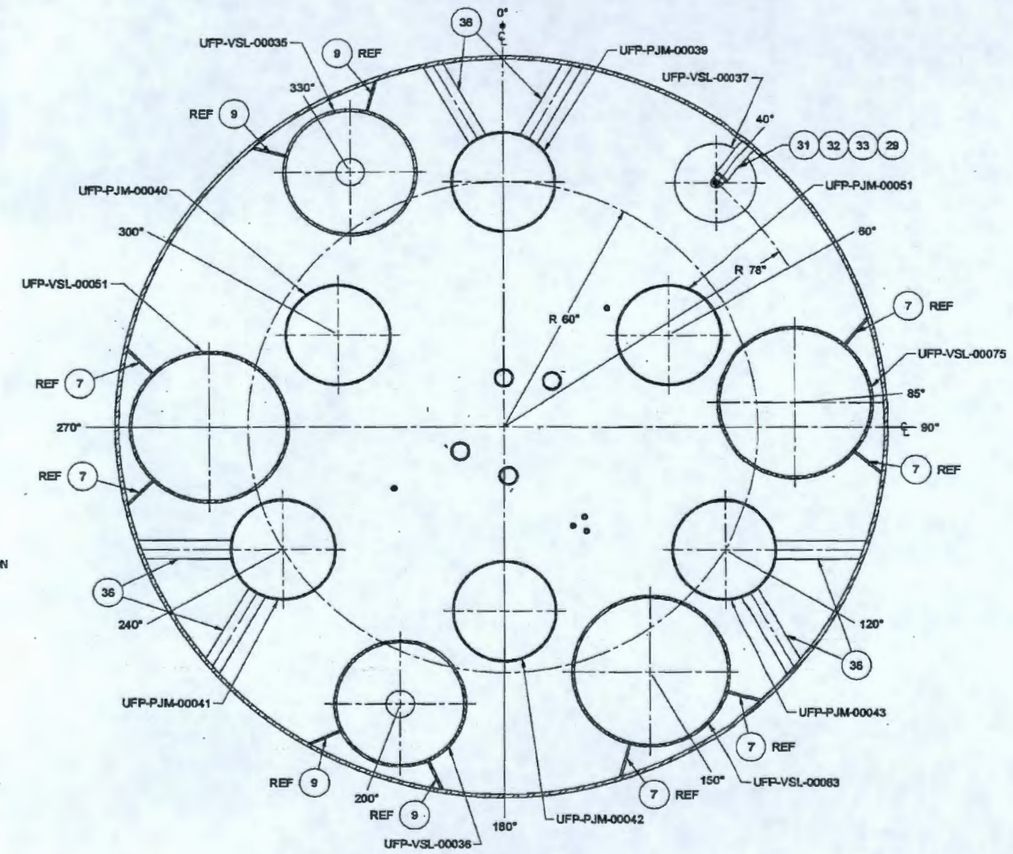

SECTION E-E
SCALE: 1/16

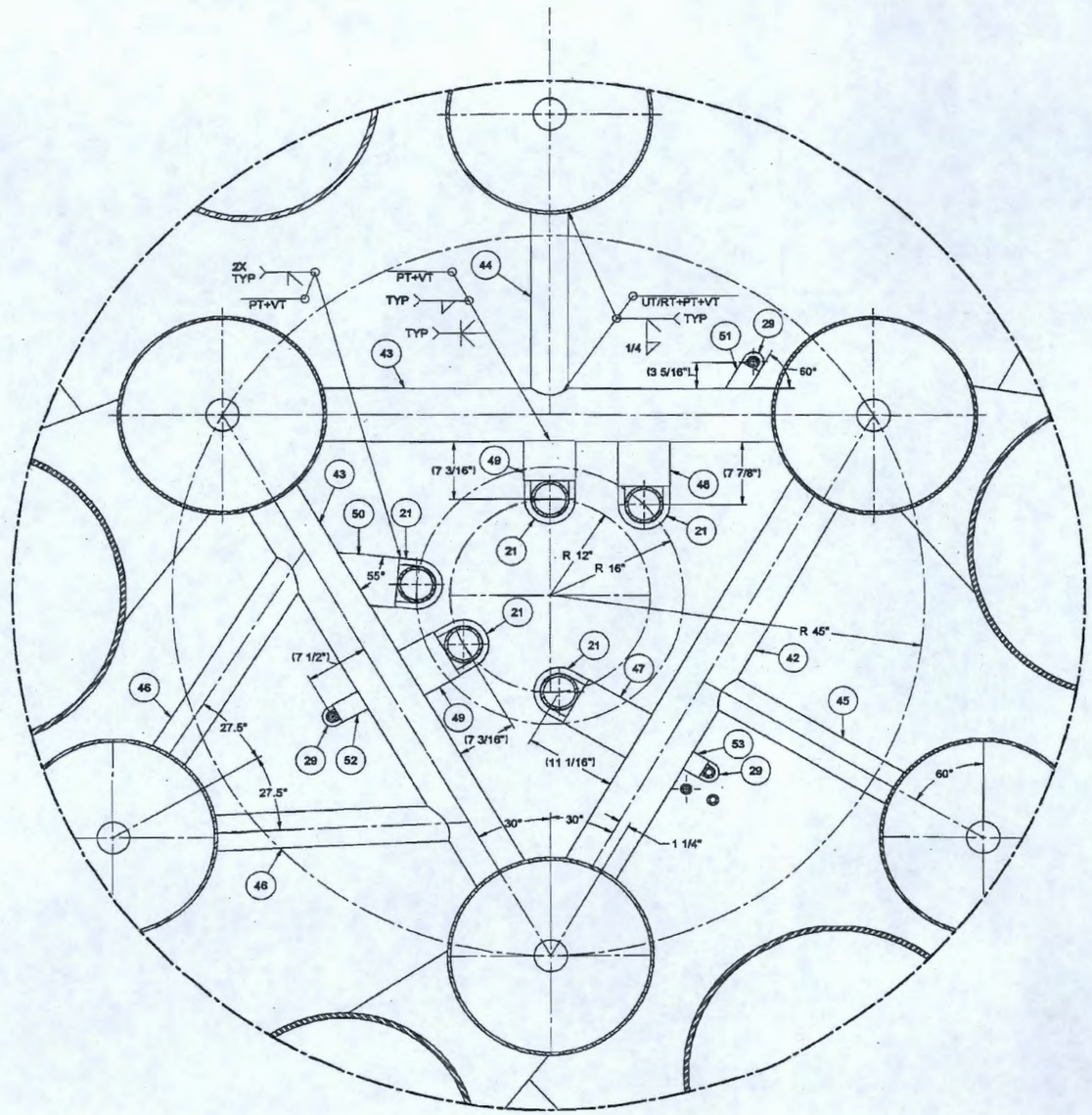

DETAIL C
SCALE: 1/8

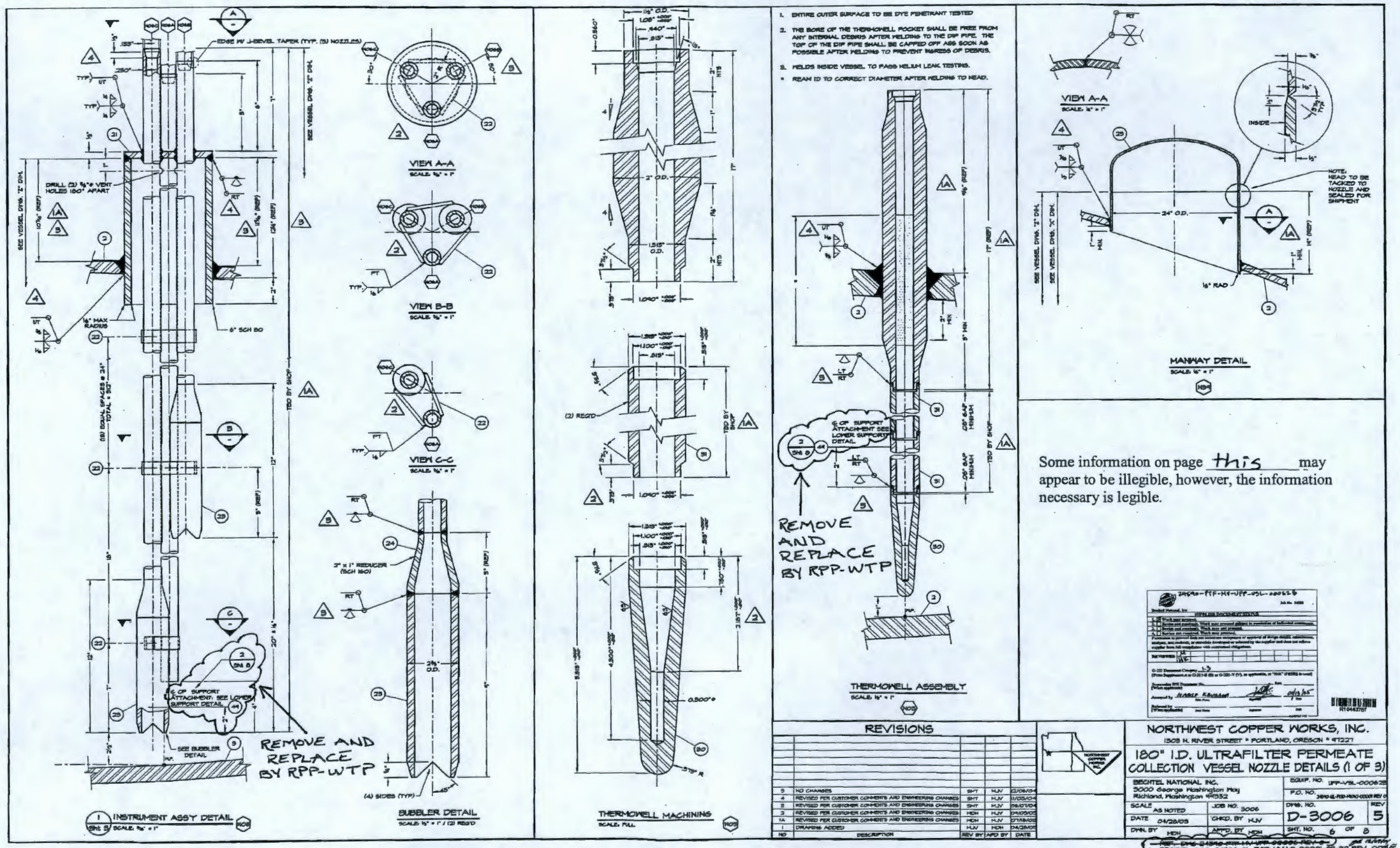

Some information on page this may appear to be illegible, however, the information necessary is legible.

REVISIONS				
5	NO CHANGES	SHT	HJV	02/06/04
4	REVISED PER CUSTOMER COMMENTS AND ENGINEERING CHANGES	SHT	HJV	11/05/04
3	REVISED PER CUSTOMER COMMENTS AND ENGINEERING CHANGES	SHT	HJV	06/07/04
2	REVISED PER CUSTOMER COMMENTS AND ENGINEERING CHANGES	MDH	HJV	04/07/03
1A	REVISED PER CUSTOMER COMMENTS AND ENGINEERING CHANGES	MDH	HJV	07/18/03
1	DRAWING ADDED	HJV	MDH	04/28/03
NO	DESCRIPTION	REV BY	APD BY	DATE

NORTHWEST COPPER WORKS, INC.
1305 N. RIVER STREET • PORTLAND, OREGON • 97227

180" I.D. ULTRAFILTER PERMEATE COLLECTION VESSEL NOZZLE DETAILS (1 OF 3)

BECHTEL NATIONAL INC.
3000 George Washington Way
Richland, Washington 99352

SCALE AS NOTED	JOB NO. 3006	EQUIP. NO. UFP-VSL-000628	
DATE 04/28/03	CHKD. BY HJV	P.O. NO. 24590-GL-POD-HVAC-00001 REV 0	
DWN. BY MDH	APPD. BY MDH	DWG. NO. D-3006	REV 5
		SHT. NO. 6 OF 8	

~~REF. DWG. 24590-PTF-M4-UFP-00006 REV. 0~~
BECHTEL DOC. 24590-GL-POD-HVAC-00001-03-32 REV. 0 DELETED BY RPP-WTP

P:\S##\ACAD\03\D3006-5 Mon Dec 06 09:43:08 2004

Some information on all page(s) may appear to be illegible, however, the information necessary for assuring adequate design is legible.

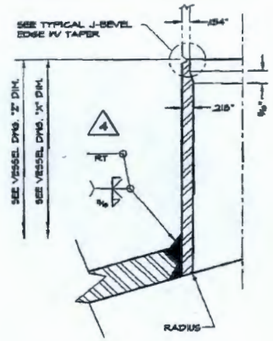

2" SCH 80 FLUSH NOZZLE
SCALE: 3/4" = 1"
N46 2

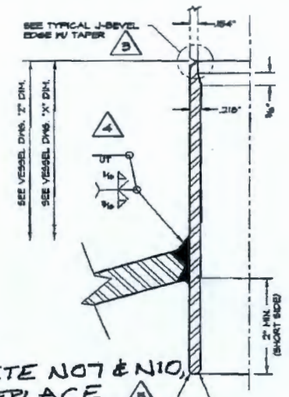

DELETE N07 & N10, AND REPLACE WITH TYPICAL SCH 160 DETAIL BY RPP-WTP

2" SCH 80 NOZZLE W/ INT. PROJECTION
SCALE: 3/4" = 1"
N07 N09 N10 N11 N14 2 3

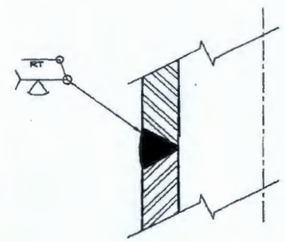

TYPICAL CIRCULAR WELD ON DIP TUBE
NO SCALE

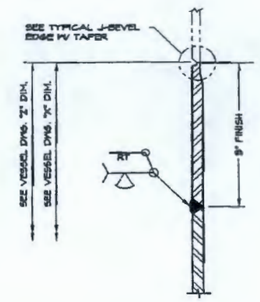

NOZZLE STUB SPLICE
SCALE: 3/4" = 1"
N15 N26 N28 N30 N32 N41 N45 4

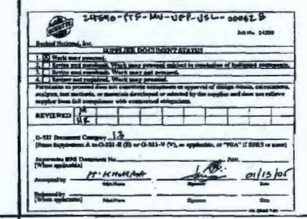

REMOVE ITEM 49 FOR N05 & N06 ONLY - BY RPP-WTP

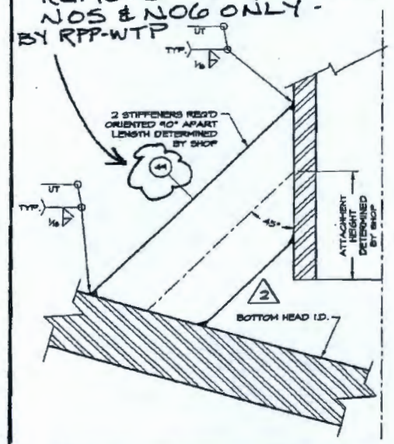

2 TYP. LOWER SUPPORT FOR DIP TUBES
NO SCALE

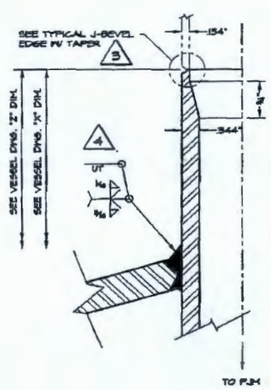

2" SCH 160 INLET TO INTERNALS
SCALE: 3/4" = 1"
N06 N18 N14 N20 N21 N41

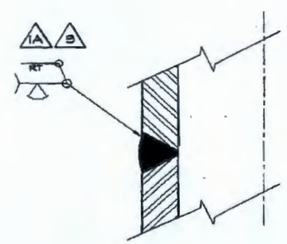

TYP. CIRC. WELD ON INLET TO INTERNALS
NO SCALE

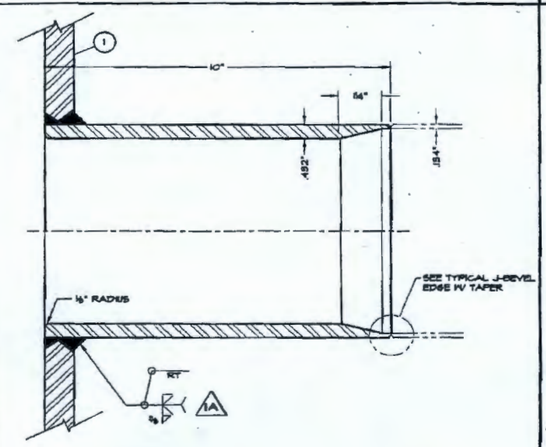

6" SCH 80 OVERFLOW NOZZLE THRU SHELL
SCALE: 1/2" = 1"
N37

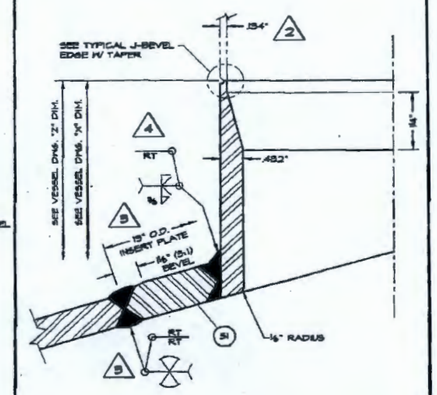

6" SCH 80 FLUSH NOZZLE
SCALE: 3/4" = 1"
N22

R10443789

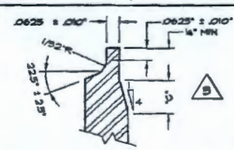

TYPICAL J-BEVEL EDGE W/ TAPER
SCALE: NONE

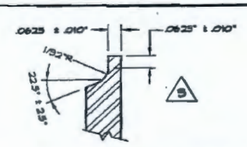

TYPICAL J-BEVEL EDGE W/O TAPER
SCALE: NONE

REVISIONS

NO	DESCRIPTION	REV BY	APD BY	DATE
5	UPDATED NOZZLE N22 RADIOGRAPHY REQUIREMENTS	SHT	MJV	12/06/04
4	UPDATED FOR SLACK CELL REQUIREMENTS	SHT	MJV	11/05/04
3	REVISED PER CUSTOMER COMMENTS AND ENGINEERING CHANGES	SHT	MJV	06/07/04
2	REVISED PER CUSTOMER COMMENTS AND ENGINEERING CHANGES	MDH	MJV	04/05/03
1A	REVISED PER CUSTOMER COMMENTS AND ENGINEERING CHANGES	MDH	MJV	07/16/03
1	DRAWING ADDED	MJV	MDH	04/29/03

NORTHWEST COPPER WORKS, INC.
1505 N. RIVER STREET • PORTLAND, OREGON • 97227

180" I.D. ULTRAFILTER PERMEATE COLLECTION VESSEL NOZZLE DETAILS (3 of 3)

BECHTEL NATIONAL INC.
3000 George Washington Way
Richland, Washington 99352

SCALE: AS NOTED	JOB NO. 3006	EQUIP. NO. UPP-VSL-000625	
DATE: 04/29/03	CHKD. BY: MJV	P.O. NO. 24590-QL-POD-MVAO-00001-03-34 REV 0	
DWN. BY: MDH	APPD. BY: MDH	DWG. NO. D-3006	REV 5
		SHT. NO. 8 OF 8	

~~REF: 24590-QL-POD-MVAO-00001 REV 00~~
BECHTEL DOC. 24590-QL-POD-MVAO-00001-03-34 REV. 00 & 01
DELETED BY RPP-WTP

P:\Sasp\ACAD\03\D3006-5 Mon Dec 06 09:42:44 2004

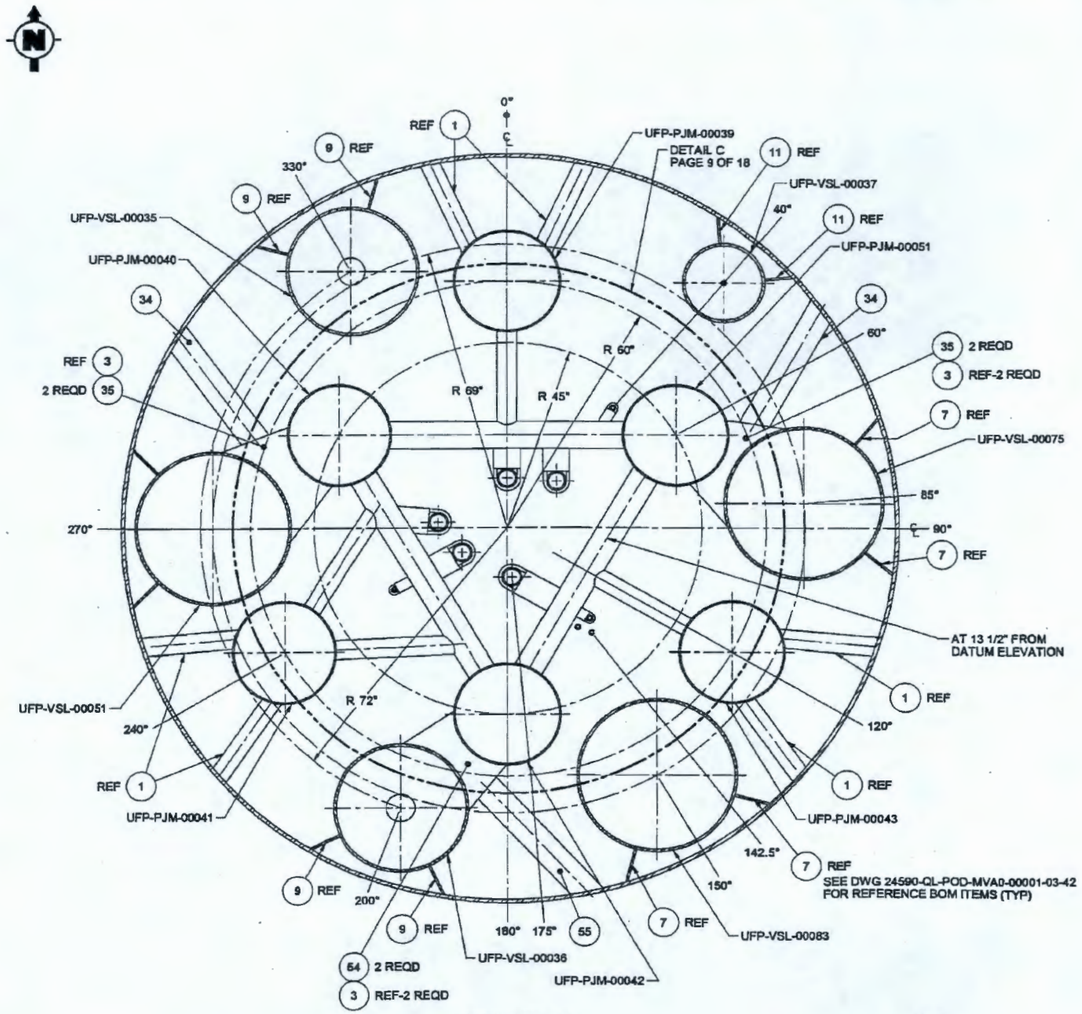

SECTION F-F
SCALE: 1/16

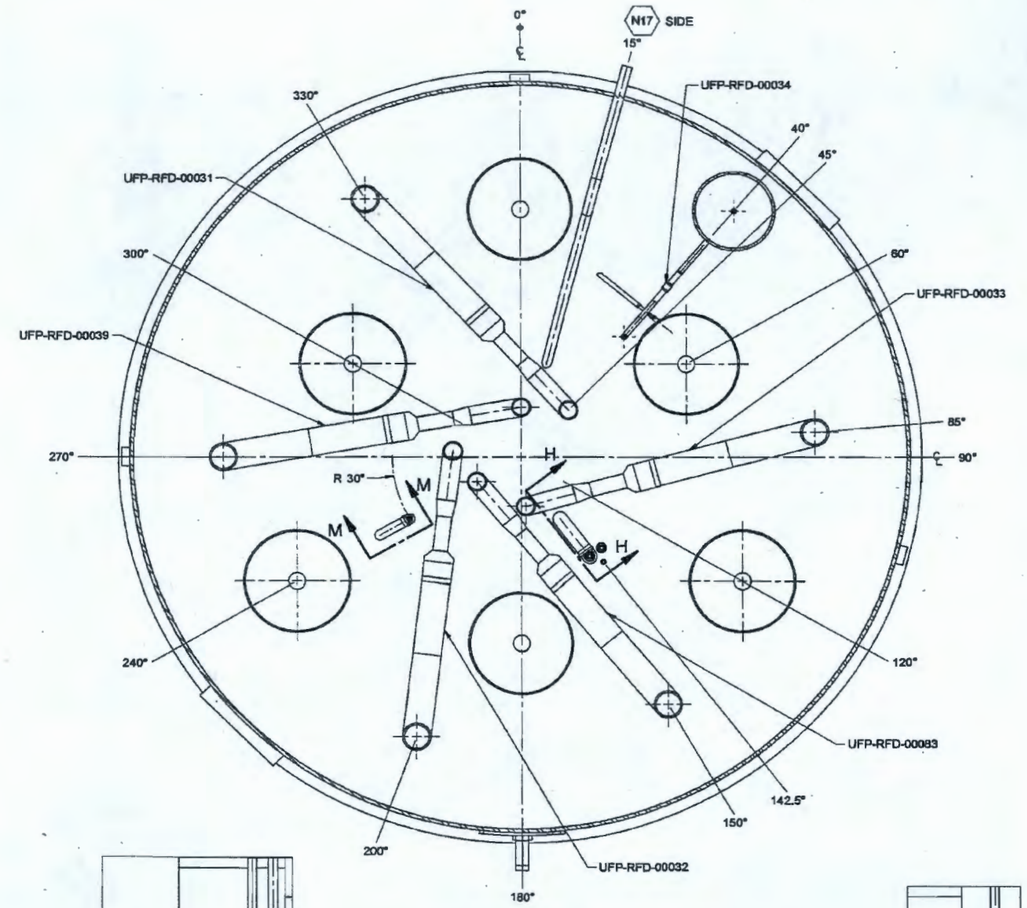

SECTION G-G
SCALE: 1/16

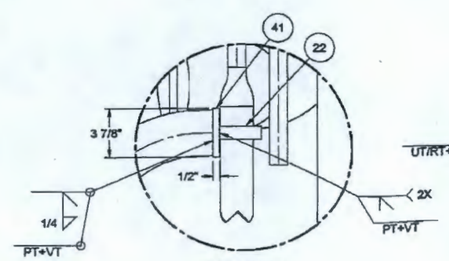

DETAIL E
SCALE: 1/5

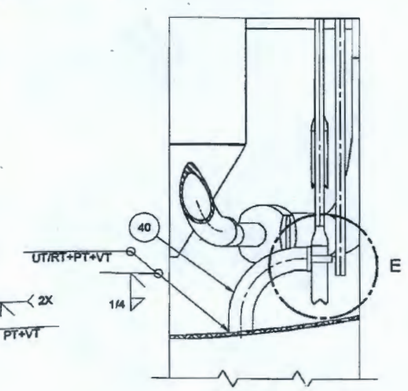

SECTION H-H
SCALE: 1/10

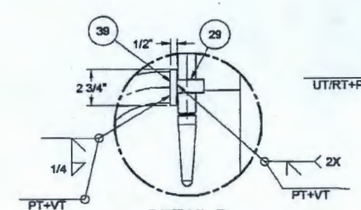

DETAIL D
SCALE: 1/5

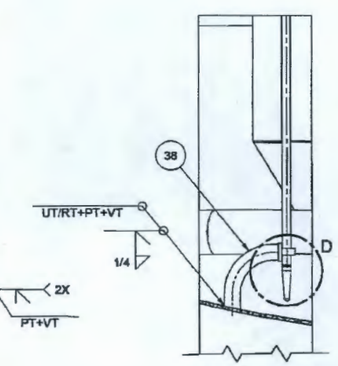

SECTION M-M
SCALE: 1/10

DELETE AND REPLACE, BY RPP-WTP

DELETE AND REPLACE, BY RPP-WTP

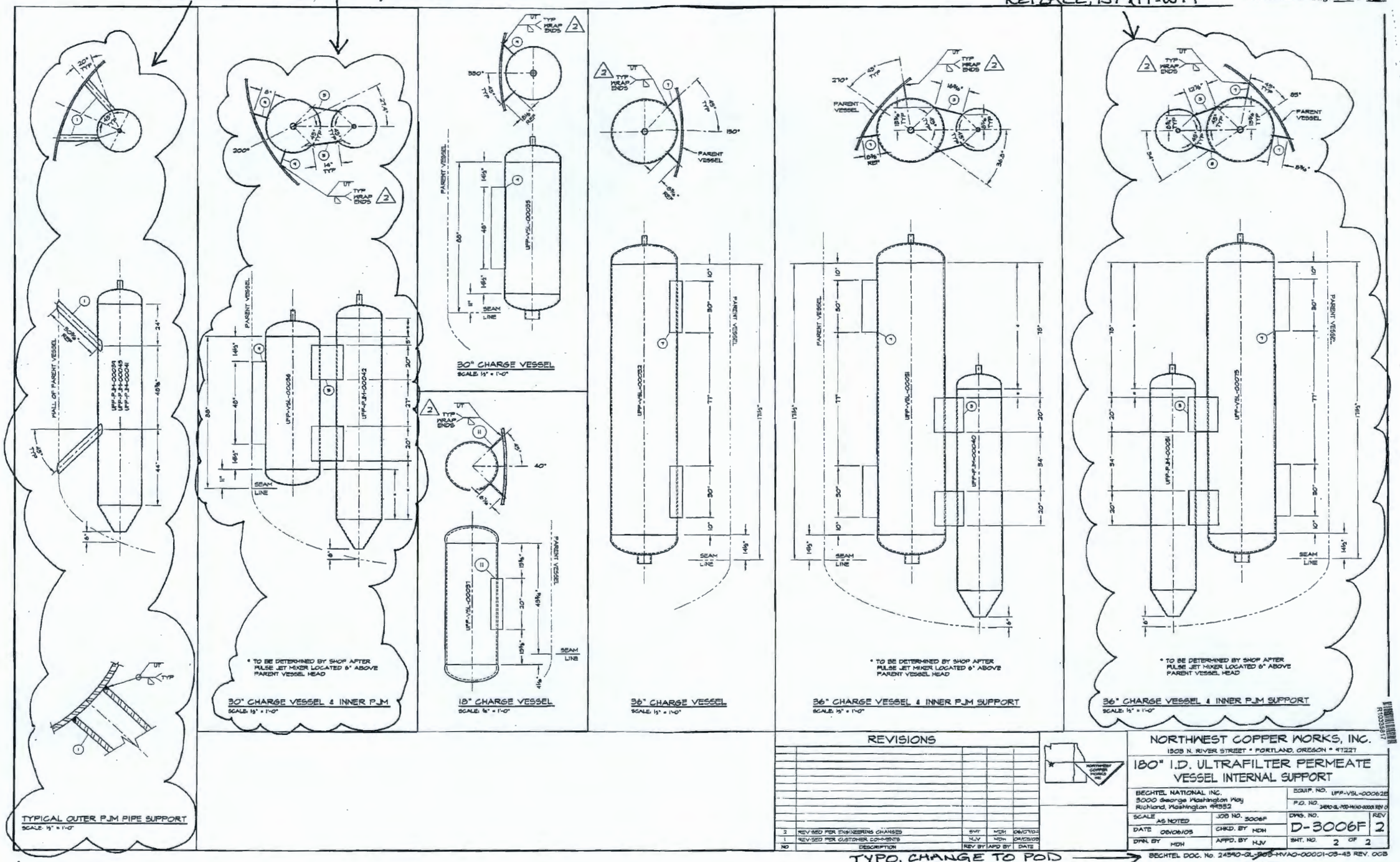

NO	DESCRIPTION	REV BY	APP'D BY	DATE
2	REVISED PER ENGINEERING CHANGES	BMT	MDH	06/07/05
1	REVISED PER CUSTOMER COMMENTS	HJV	MDH	04/25/05

REVISIONS

NORTHWEST COPPER WORKS, INC.
1303 N. RIVER STREET • PORTLAND, OREGON • 97227

180" I.D. ULTRAFILTER PERMEATE VESSEL INTERNAL SUPPORT

BECHTEL NATIONAL INC.
3000 George Washington Way
Richland, Washington 99352

EQUIP. NO. UFP-VSL-00062B
P.O. NO. 24590-QL-POD-HVAO-00001 REV 0

SCALE AS NOTED	JOB NO. 3006F	DWG. NO. D-3006F	REV 2
DATE 06/06/05	CHKD. BY MDH		
DWN. BY MDH	APPD. BY HJV	SHT. NO. 2 OF 2	

BECHTEL DOC. No. 24590-QL-POD-HVAO-00001-03-45 REV. 003

TYPO, CHANGE TO POD BY RPP-WTP

POD

F:\Swap\ACAD\D3\D3006F-2.dwg, 7/6/2004 9:43:57 AM

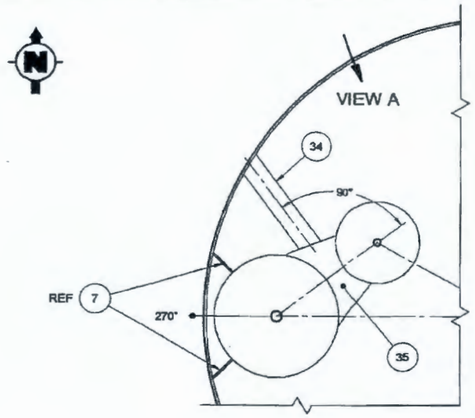

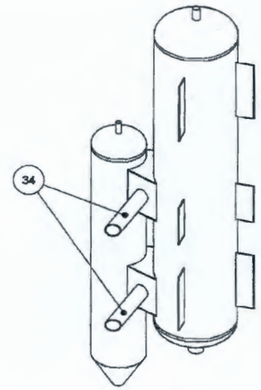

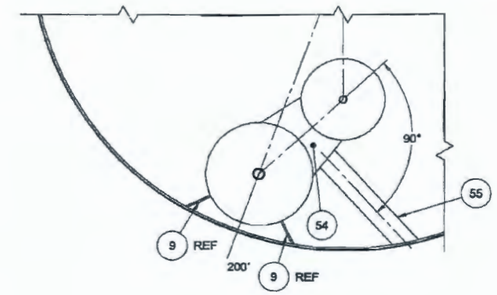

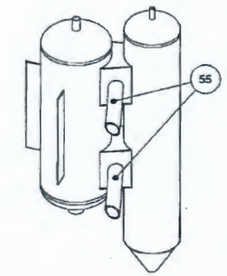

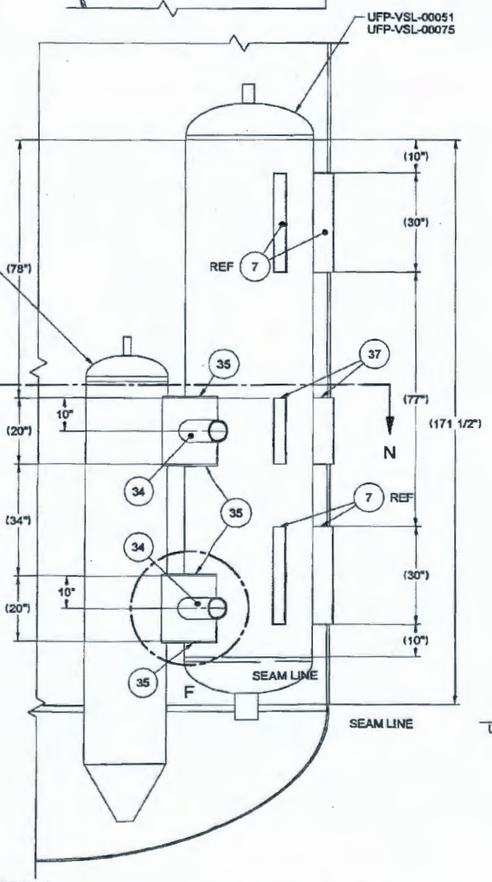

VIEW A
36" CHARGE VESSEL & INNER PJM SUPPORT
SCALE: 1/20
SEE DWG 24590-QL-POD-MVA0-00001-03-42
FOR REFERENCE BOM ITEMS

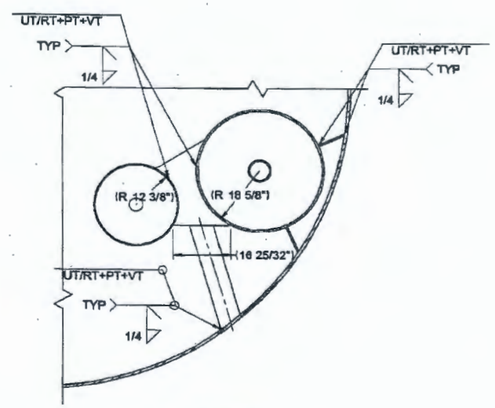

SECTION N-N
SCALE: 1/20

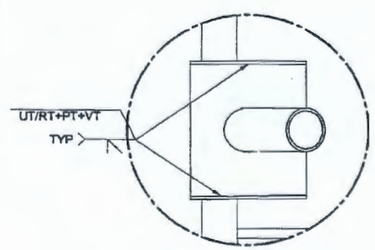

35 DETAIL F
SCALE: 1/10

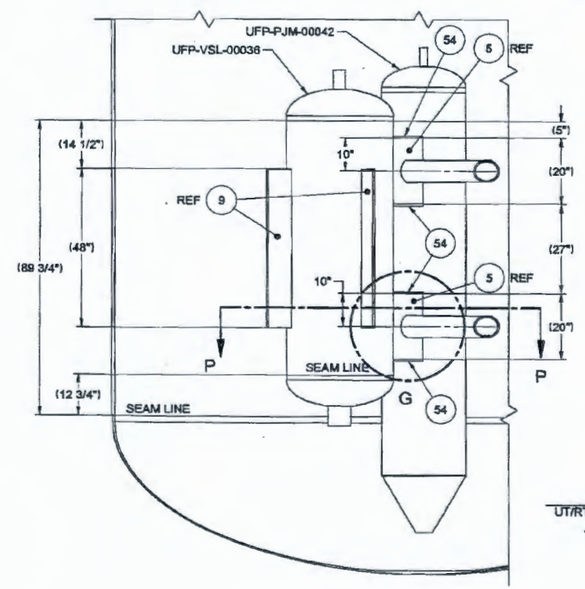

30" CHARGE VESSEL & INNER PJM SUPPORT
SCALE: 1/20
SEE DWG 24590-QL-POD-MVA0-00001-03-42
FOR REFERENCE BOM ITEMS

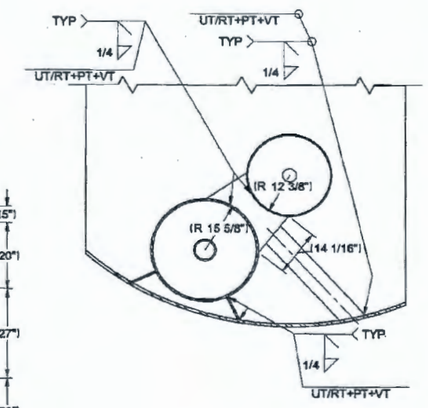

SECTION P-P
SCALE: 1/20

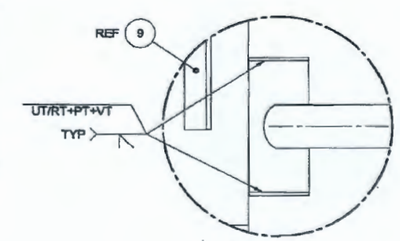

54 DETAIL G
SCALE: 1/10

Some information on all page(s) may appear to be illegible, however, the information necessary for assuring adequate design is legible.

P:\Swap\ACAD\03\D3006-7 prelim.dwg, 6/20/2005 4:12:55 PM

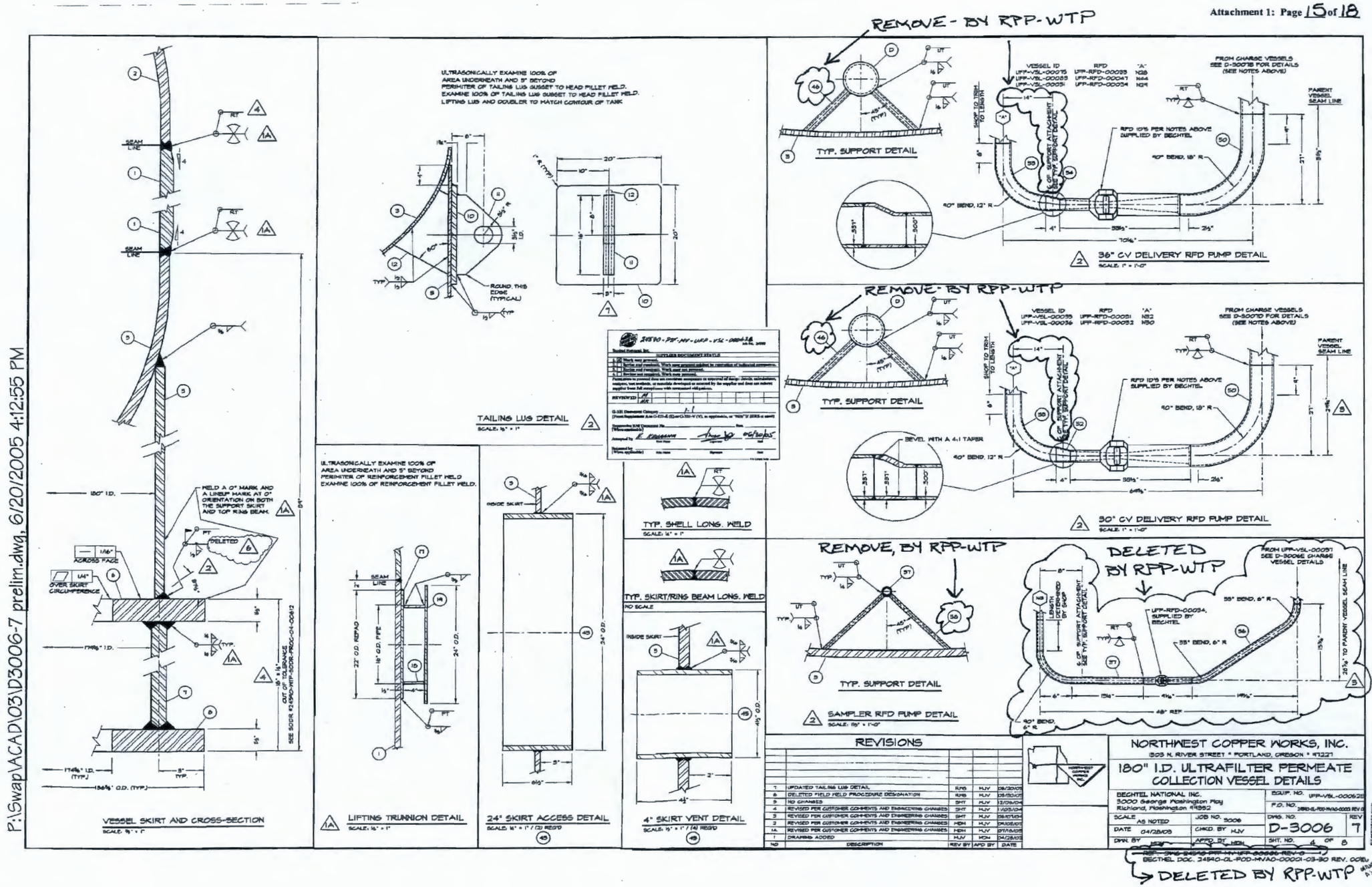

BILL OF MATERIALS					
MK	THICK/SIZE	MATERIAL	HEAT NO.	DESCRIPTION	QTY
59	1" Ø	SA 479 TYPE 316		BAR	2
60	1" SCHED 160S	SA 312 TP 316/316L 0.030% MAX C		SMLS PIPE, OFFSET	1

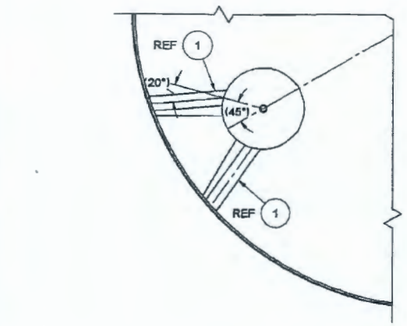

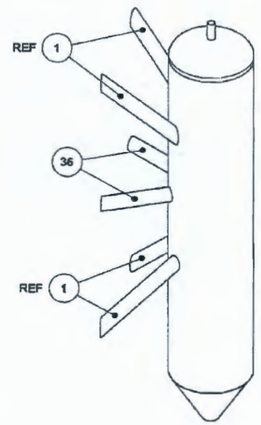

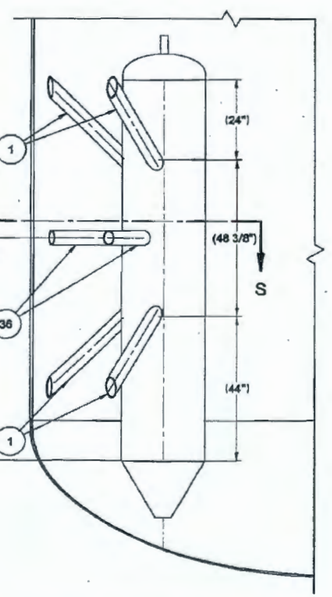

TYPICAL OUTER PJM SUPPORT
SCALE: 1/20
SEE DWG 24590-QL-POD-MVA0-00001-03-42
FOR REFERENCE BOM ITEMS

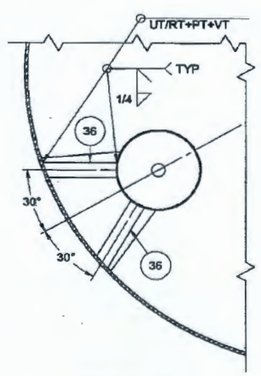

SECTION S-S
SCALE: 1/20

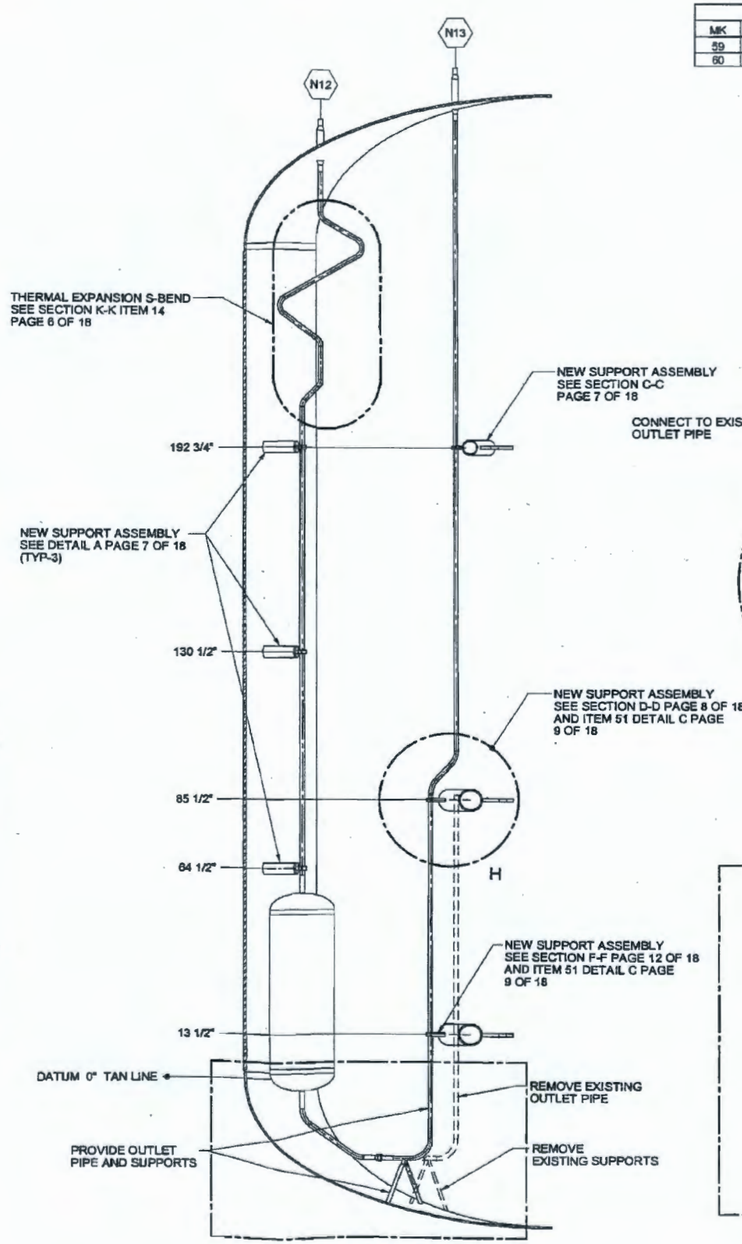

SAMPLER PUMP RFD ASSEMBLY
SCALE: 1/20
SEE DWG 24590-QL-POD-MVA0-00001-03-04
FOR REFERENCE BOM ITEMS

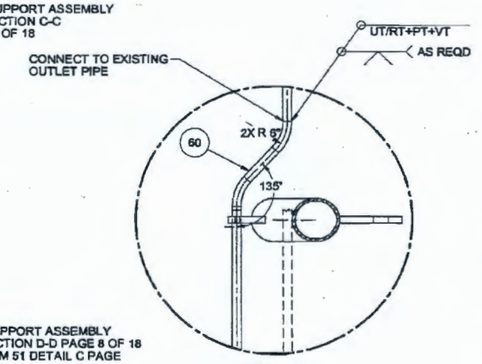

DETAIL H
SCALE: 1/10

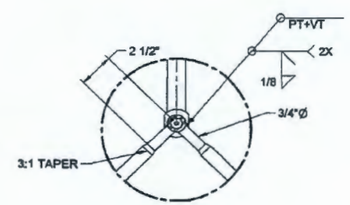

DETAIL J
SCALE: 1/5

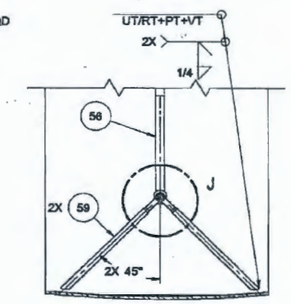

SECTION R-R
SCALE: 1/10

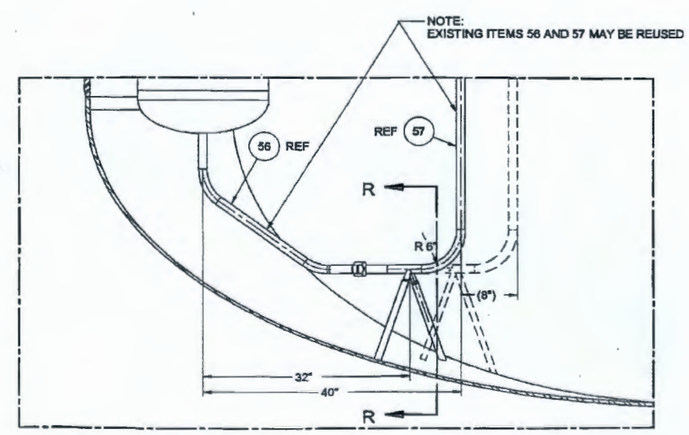

SAMPLER PUMP RFD DETAIL
SCALE: 1/10

24590-PTF-VDCN-MS-10-00008

Attachment 1: Page 16 of 18

FORM D_MASTER 03/2003

SCREENING IS REQUIRED FOR DRAWING TYPES IDENTIFIED IN 24590-WTP-CPP-SREC-002

"D" SIZE - 34x22
COMPUTER GENERATED - MANUAL DESIGN CHANGES NOT PERMITTED

Some information on all page(s) may appear to be illegible, however, the information necessary for assuring adequate design is legible.

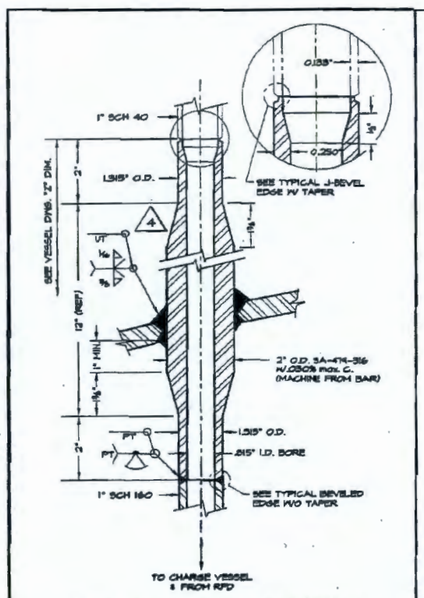

2" MACHINED BAR NOZZLE TO INTERNALS
SCALE: ½" = 1"

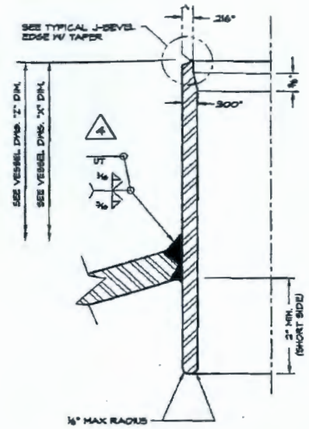

3" SCH 80 NOZZLE W/ INT. PROJECTION
SCALE: ¾" = 1"

24590-PTF-MV-UPT-VSL-000628
Bechtel National, Inc.
SCOPE OF DOCUMENT STATES
1. ☒ What's now approved.
2. ☐ Review and comment. What's now proposed subject to resolution of technical comments.
3. ☐ Review and comment. What's now not accepted.
4. ☐ Review not required. What's now informed.
Permission to proceed does not constitute acceptance or approval of design details, calculations, analyses, test methods, or materials developed or selected by the supplier and does not relieve supplier from full compliance with contractual obligations.
REVIEWED M VL
Q-233 Statement Category 1-2
(Press Supplement A to Q-233-E (B) or Q-233-V (V), or equivalent, or "NOA" if NQA-1 is used)
Contractor MS Discipline No. Rev.
(Where applicable)
Accepted by H. Schumacher 01/13/06
Reviewed by (Where applicable)

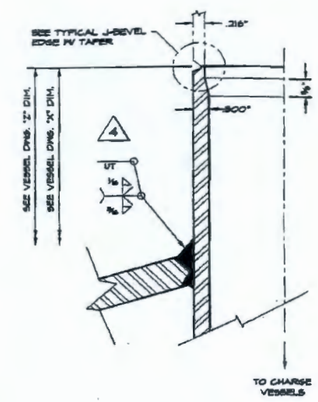

3" SCH 80 INLET TO INTERNALS
SCALE: ¾" = 1"

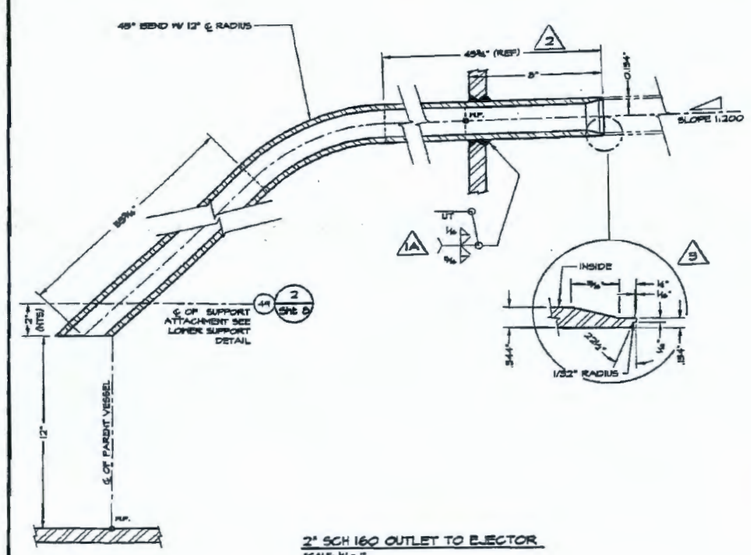

2" SCH 160 OUTLET TO EJECTOR
SCALE: ¾" = 1"

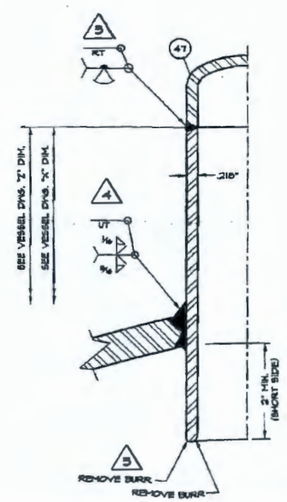

2" SCH 80 CAPPED NOZZLE W/ INT. PROJECTION
SCALE: ¾" = 1"

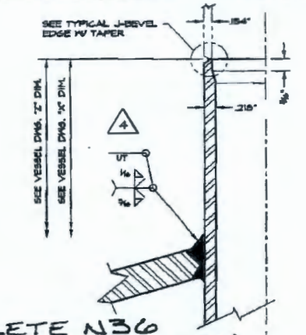

DELETE N36 AND REPLACE WITH TYPICAL SCH 160 NOZZLE DETAIL (REF SECTION Q-Q) BY RPP-WTP →

2" SCH 80 INLET TO INTERNALS
SCALE: ¾" = 1"

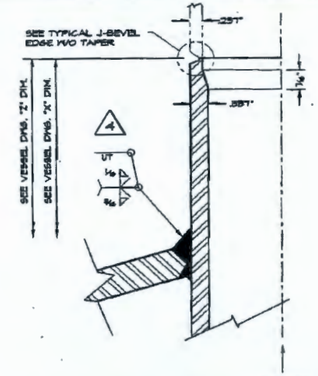

4" SCH 80 OUTLET FROM INTERNALS
SCALE: ¾" = 1"

R10443708

REVISIONS

NO	DESCRIPTION	REV BY	APD BY	DATE
5	NO CHANGES	SMT	MJV	12/06/04
4	REVISED PER CUSTOMER COMMENTS AND ENGINEERING CHANGES	SMT	MJV	11/08/04
3	REVISED PER CUSTOMER COMMENTS AND ENGINEERING CHANGES	SMT	MJV	06/07/04
2	REVISED PER CUSTOMER COMMENTS AND ENGINEERING CHANGES	MDH	MJV	04/09/03
1A	REVISED PER CUSTOMER COMMENTS AND ENGINEERING CHANGES	MDH	MJV	07/18/03
1	DRAWING ADDED	MJV	MDH	04/28/03

NORTHWEST COPPER WORKS, INC.
1503 N. RIVER STREET • PORTLAND, OREGON • 97227

180" I.D. ULTRAFILTER PERMEATE COLLECTION VESSEL NOZZLE DETAILS (2 OF 3)

BECHTEL NATIONAL INC.
3000 George Washington Way
Richland, Washington 99352

EQUIP. NO. UPP-VSL-000628
P.O. NO. 26904-QL-POD-MVAO-00001 REV 0
SCALE AS NOTED
JOB NO. 3006
DWG. NO. D-3006
REV 5
DATE 04/28/03
CHKD. BY MJV
DWN. BY MDH
APPD. BY MDH
SHT. NO. 7 OF 8

REF: DWG 24590-PTF-MV-UPP-00006 REV 0 2
BECHTEL DOC. 24590-QL-POD-MVAO-00001-05-55 REV. 0 0

DELETED BY RPP-WTP

P:\Seep\ACAD\03\D3006-5 Mon Dec 06 09:42:54 2004

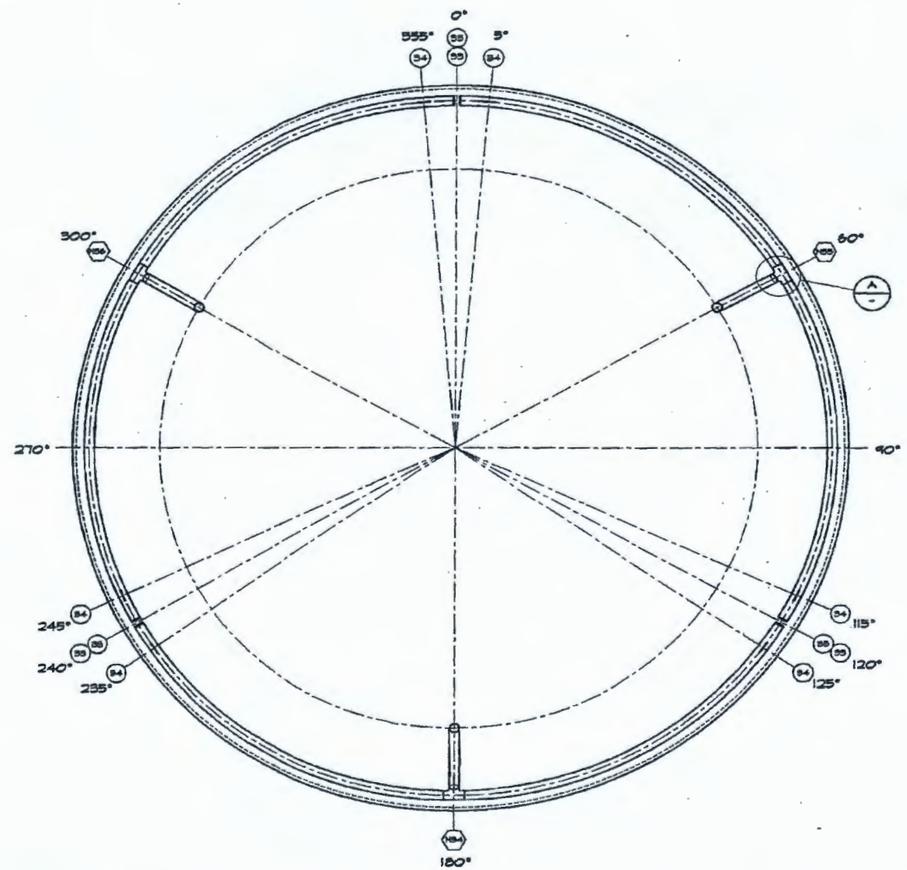

WASH RING ORIENTATION
SCALE: 1/8" = 1'-0"

Some information on all page(s) may appear to be illegible, however, the information necessary for assuring adequate design is legible.

DELETE N36 AND ADD SECTION Q-Q BY RPP-WTP

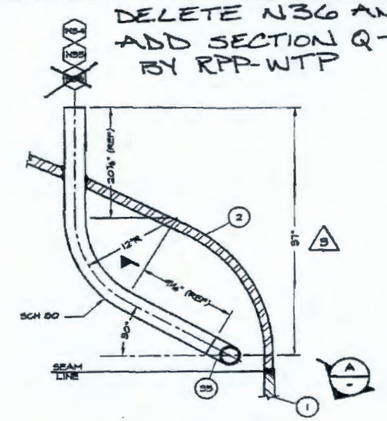

WASH RING TEE
SCALE: 1/4" = 1'

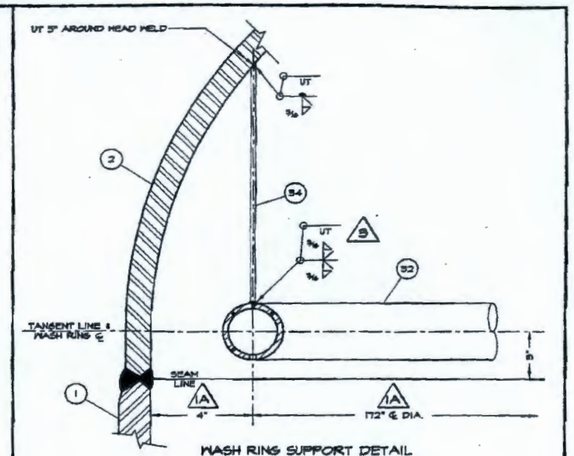

WASH RING SUPPORT DETAIL
SCALE: 3/8" = 1'

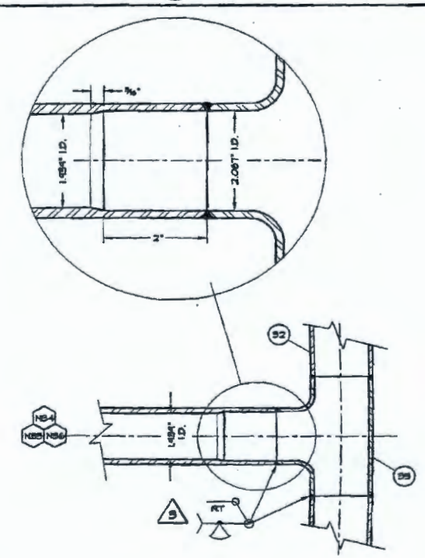

WASH RING TEE SECTION A-A
SCALE: 1/8" = 1'

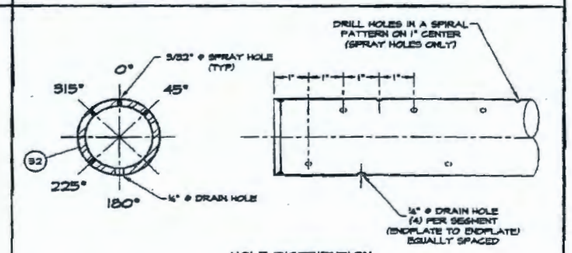

HOLE DISTRIBUTION
SCALE: 1/2" = 1'

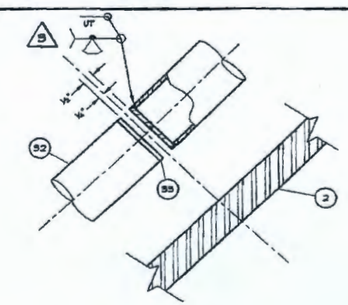

END PLATE DETAIL
SCALE: 3/8" = 1'

24590-PTF-MV-UFP-VSL-000625 B

SUPPLIER DOCUMENT STATUS

REVIEWED

Assigned by 04/29/05

REVISIONS

NO	DESCRIPTION	REV BY	APD BY	DATE
5	NO CHANGES	SMT	MJV	12/08/04
4	NO CHANGES	SMT	MJV	11/09/04
3	REVISED PER CUSTOMER COMMENTS AND ENGINEERING CHANGES	SMT	MJV	08/07/04
2	REVISED PER CUSTOMER COMMENTS AND ENGINEERING CHANGES	MDH	MJV	04/25/03
1A	REVISED PER CUSTOMER COMMENTS AND ENGINEERING CHANGES	MDH	MJV	07/18/03
1	DRAWING ADDED	MJV	MDH	04/28/03

NORTHWEST COPPER WORKS, INC.
1908 N. RIVER STREET • PORTLAND, OREGON • 97227

180" I.D. ULTRAFILTER PERMEATE COLLECTION VESSEL WASH RING DETAILS

BECHTEL NATIONAL INC.
3000 George Washington Way
Richland, Washington 99352

EQUIP. NO. UFP-VSL-000625
P.O. NO. 24590-GLPOD-MS10-0003 REV 0
SCALE AS NOTED
JOB NO. 3006
DWG. NO. D-3006
REV 5
DATE 04/28/03
CHKD. BY MJV
DWN. BY MDH
APPD. BY MDH
SHT. NO. 5 OF 8

REF. DWG 24590 PTF MV UFP 00006 REV 0
BECHTEL DOC. 24590-GL-POD-MVAC-00001-03-31 REV. 00

P:\Sasp\ACAD\03\D3006-5 Mon Dec 06 09:43:19 2004

R11307228

Drawing Change Notice

CHANGE DOCUMENT NO.
24590-PTF-VDCN-MS-10-00009

JOB NO.	TITLE FOR CHANGE NOTICE
24590	UFP-VSL-00062C Redesign

ISSUED BY
RPPWTP PDC

DESIGN DOCUMENT NUMBER	REV	DESIGN DOCUMENT NUMBER	REV
24590-QL-POD-MVA0-00001-03-07	F	24590-QL-POD-MVA0-00001-03-08	F
24590-QL-POD-MVA0-00001-03-09	F	24590-QL-POD-MVA0-00001-03-10	G
24590-QL-POD-MVA0-00001-03-11	E	24590-QL-POD-MVA0-00001-03-12	E
24590-QL-POD-MVA0-00001-03-13	E	24590-QL-POD-MVA0-00001-03-14	E
24590-QL-POD-MVA0-00001-03-44	B	24590-QL-POD-MVA0-00001-03-45	B

PART OF DESIGN CHANGE PACKAGE (DCP)? ☐ Yes ☒ No DCP No.: N/A Rev:

JUSTIFICATION FOR CHANGE	CAUSE CODE
Based on the re-analysis of UFP-VSL-00062C, per calculation 24590-PTF-MVC-UFP-00023, for revised seismic conditions and design evolution, required a redesign of the vessel.	01 and 23

Supersedes Change Document ☒ Yes ☐ No Document # 24590-PTF-VDCN-MS-10-00002
24590-PTF-VDCN-MS-10-00004

ECN Needed ☐ Yes ☒ No

REQUIREMENTS REVIEW

Client Approval Required ☐ Yes ☒ No Interface Resolution Required * ☐ Yes ☒ No

Address any "yes" answers in the description

DESCRIPTION OF CHANGE

NOTE: Components removed or deleted per this VDCN are to be removed from the actual vessel unless otherwise noted.

1. **Affected Document: 24590-QL-POD-MVA0-00001-03-07 (see Attachment 1, page 1 of this VDCN).**

   a.) Design Conditions block: Change 'Design Pressure' to 15 / -2.0

   b.) Design Conditions block: Change temperature to 230°F.

   c.) Bill of Materials block, change/delete as follows:

   Line item 38: Delete

   Line item 46: Delete

   Line item 48: Delete

   Line item 49: Delete (As required)

   Line item 55: Delete

   Line item 58: Delete

   d.) Bill of Materials block, add item 59 and 60 shown on Attachment 1, page 16 of this VDCN.

   e.) Estimated Weight, (in LBS) block, change as follows:

   OPERATING - 512,285 lbs

   FULL WATER - 401,100 lbs

   EMPTY - 103,000 lbs

   f.) General Notes and Special Requirements: Delete Note 8 and replace with the following text:

   Fabrication tolerances for field modifications shall be per 24590-WTP-MV-M59T-00001 (Pressure Vessel Tolerances Standard Details) and PFI Standard ES-24 (Pipe Bending Methods, Tolerances, Process and Material Requirement). For tolerances not specified by these standards, the following shall apply, unless otherwise noted:

Dimension	Tolerance
Linear < 12 inch	± 1/8 inch
Linear ≥ 12 inch	± 1/4 inch
Angular	± 2 degrees

Please note that source, special nuclear, and byproduct materials, as defined in the Atomic Energy Act of 1954 (AEA) are regulated at the U. S. Department of Energy (DOE) facilities exclusively by DOE acting pursuant to its AEA authority. DOE asserts that pursuant to AEA, it has sole and exclusive responsibility and authority to regulate source, special nuclear, and byproduct materials at DOE-owned nuclear facilities. Information contained herein on radionuclides is provided for process description purposes only.

Drawing Change Notice

CHANGE DOCUMENT NO.
24590-PTF-VDCN-MS-10-00009

JOB NO.	TITLE FOR CHANGE NOTICE
24590	UFP-VSL-00062C Redesign

DESCRIPTION OF CHANGE

g.) RT per ASME Section VIII Div. 1 Appendix 4: Item 3, delete second sentence "This does not include internal pipe supports and braces".

h.) Connection Schedule block: Change the 'NECK THK' to SCH 160 for the following nozzles:

N07

N10

N34

i.) Connection Schedule block: Change the 'NECK MATERIAL' to SA312 TP316/316L 0.030% MAX C for the following nozzles:

N07

N10

N34

j.) RT per ASME Section VIII Div.1 Appendix 4 block: Change Appendix 4 to read "UW-51".

k.) Under title block, delete BNI reference drawing entitled, "REF DWG 24590-PTF MV-UFP-00005 REV 0".

2. **Affected Document: 24590-QL-POD-MVA0-00001-03-08 (see Attachment 1, page 2 of this VDCN).**

a.) Vessel Elevation View:

(1.) Delete supports and associated part bubbles depicted on drawing.

(2.) Delete support dimensions depicted on drawing.

(3.) Under title block, delete BNI reference entitled, "REF DWG 24590-PTF MV-UFP-00005 REV 0".

3. **Affected Document: 24590-QL-POD-MVA0-00001-03-09 (see Attachment 1, page 3 of this VDCN).**

a.) Vessel Orientation: Delete supports as shown.

b.) Internal Pipe Brace Details: Remove items 38, 48 and 55. NOTE: Pipe Lugs are to remain in place.

c.) Internal Pipe Brace Details: Delete detail and remove components.

d.) Under title block, delete BNI reference drawing entitled, "REF DWG 24590-PTF MV-UFP-00005 REV 0".

4. **Affected Document: 24590-QL-POD-MVA0-00001-03-44 (see Attachment 1, page 4 of this VDCN).**

a.) Elevation View: Delete Elevation View and replace with NORTH ELEVATION VIEW shown on Attachment 1, page 5 of this VDCN.

b.) Internal Vessel Support Orientation: Remove view as this will be covered in Sections B-B, C-C, D-D, E-E, F-F, and G-G shown on Attachment 1, page 5 of this VDCN.

c.) Add BILL OF MATERIALS items 12 through 53 shown on Attachment 1, page 5 of this VDCN.

d.) Add SECTION B-B shown on Attachment 1, page 6 of this VDCN.

e.) Add SECTION J-J and item 12 THERMAL EXPANSION S-BEND shown on Attachment 1, page 6 of this VDCN.

f.) Add SECTION L-L and item 13 THERMAL EXPANSION S-BEND shown on Attachment 1, page 6 of this VDCN.

g.) Add SECTION K-K and item 14 THERMAL EXPANSION S-BEND shown on Attachment 1, page 6 of this VDCN.

h.) Shown on Attachment 1, page 7 of this VDCN, add the following:

(1.) SECTION C-C

(2.) DETAIL-B

(3.) Item 21 - GUIDE RING

(4.) Item 22 - GUIDE RING

(5.) Item 29 - GUIDE RING

(6.) Construction, NOTE 1

Drawing Change Notice

CHANGE DOCUMENT NO.
24590-PTF-VDCN-MS-10-00009

JOB NO.	TITLE FOR CHANGE NOTICE
24590	UFP-VSL-00062C Redesign

DESCRIPTION OF CHANGE

i.) Construction Notes block add the following numbered notes:

NOTE 2: WHERE PLATE MATERIAL IS SPECIFIED AS ASME SA240, ASME SA479 MATERIAL MAY BE SUBSTITUTED.

j.) Add SECTION D-D shown on Attachment 1, page 8 of this VDCN.

k.) Add SECTION E-E shown on Attachment 1, page 8 of this VDCN.

l.) Add Detail C shown on Attachment 1, page 9 of this VDCN.

m.) Add SECTION F-F shown on Attachment 1, page 12 of this VDCN.

n.) Add SECTION G-G shown on Attachment 1, page 12 of this VDCN.

5. **Affected Document: 24590-QL-POD-MVA0-00001-03-12 (see Attachment 1, page 10 of this VDCN).**

a.) Instrument Assy Detail: Remove support item 49 and replace with items 22, 40, and 41, shown by SECTION H-H and DETAIL-E, Attachment 1, page 12 of this VDCN.

b.) Thermowell Assembly: Remove support item 49 and replace with Items 29, 38, and 39, shown by SECTION M-M and DETAIL-D, Attachment 1, page 12 of this VDCN.

c.) Under title block, delete BNI reference drawing entitled, "REF DWG 24590-PTF MV-UFP-00005 REV 0".

6. **Affected Document: 24590-QL-POD-MVA0-00001-03-14 (see Attachment 1, page 11 of this VDCN).**

a.) Typ Lower Support For Dip Tubes: Remove support item 49 for N05 and N06 only.
NOTE: This support detail is covered on Vendor drawing 24590-QL-POD-MVA0-00001-03-12 as reflected in item 5 of this VDCN.

b.) 2" SCH 80 NOZZLE W / INT PROJECTION: Delete N07 and N10 and replace with Typical 160 SCH Detail.

c.) Under title block, delete BNI reference drawing entitled, "REF DWG 24590-PTF MV-UFP-00005 REV 0".

7. **Affected Document: 24590-QL-POD-MVA0-00001-03-45 (see Attachment 1, page 13 of this VDCN).**

a.) Typical Outer PJM Pipe Support: Delete Typical Outer PJM Pipe Support view and replace with TYPICAL OUTER PJM SUPPORT, SECTION S-S and associated views shown on Attachment 1, page 14 of this VDCN.

b.) 36" Charge Vessel & Inner PJM Support: Delete 36" Charge Vessel & Inner PJM Support and replace with 36" CHARGE VESSEL & INNER PJM SUPPORT, SECTION N-N, and associated views shown on Attachment 1, page 14 of this VDCN.

8. **Affected Document: 24590-QL-POD-MVA0-00001-03-10 (see Attachment 1, page 15 of this VDCN).**

a.) 36" CV Delivery RFD Pump Detail: Remove support item 46 from TYP SUPPORT DETAIL and reference to SEE TYP SUPPORT DETAIL including dimension.

b.) 30" CV Delivery RFD Pump Detail: Remove support item 46 from TYP SUPPORT DETAIL and reference to SEE TYP SUPPORT DETAIL including dimension.

c.) Sampler RFD Pump Detail:

(1.) Remove support item 58 from TYP SUPPORT DETAIL.

(2.) Add DETAIL J, SECTION R-R, and SAMPLER PUMP RFD DETAIL shown on Attachment 1, page 16 of this VDCN.

(3.) Delete other detail shown and replace with SAMPLER PUMP RFD DETAIL and DETAIL H shown on Attachment 1, page 16 of this VDCN.

d.) Under title block, delete BNI reference drawing entitled, "REF DWG 24590-PTF MV-UFP-00005 REV 0".

Drawing Change Notice

CHANGE DOCUMENT NO.
24590-PTF-VDCN-MS-10-00009

JOB NO.	TITLE FOR CHANGE NOTICE
24590	UFP-VSL-00062C Redesign

DESCRIPTION OF CHANGE

9. **Affected Document: 24590-QL-POD-MVA0-00001-03-13 (see Attachment 1, page 17 of this VDCN).**

   a.) 2"SCH 80 INLET TO INTERNALS: Delete N34 and replace with Typical SCH 160 Nozzle Detail (REF Section Q-Q, Attachment 1, page 6 of 18).

   b.) Under title block, delete BNI reference drawing entitled, "REF DWG 24590-PTF MV-UFP-00005 REV 0".

10. **Affected Document: 24590-QL-POD-MVA0-00001-03-11 (see Attachment 1, page 18 of this VDCN).**

   a.) WASH RING TEE: Delete N34 and add Section Q-Q which depicts N34 details show on Attachment 1, page 6 of this VDCN.

   b.) Under title block, delete BNI reference drawing entitled, "REF DWG 24590-PTF MV-UFP-00005 REV 0".

ORIGINATOR	CHECKER
M. Mudry	L. Rodgers

Reviews

CON - S. Ristow 1/6/11	E&NS - J. Rathbun	CS&A - M. Axup	MET - J. Disney
MS&PE ~~- B. Evans~~ DVV 1/6/11	PD - J. Mc Grath	PE&T - J. Olson	

Approval(s)

PEQ - J. Julyk			

Date *(inserted by final approver)*: 1/6/11

CHANGE N07, N10, AND N34 AS FOLLOWS:
MATERIAL = SA312 TP316/316L 0.030% MAX C & THK = SCH160
BY RPP-WTP

DESIGN CONDITIONS

SPECIFICATIONS	PARENT VESSEL
DESIGN PRESSURE	~~[illegible]~~ 15/-2.0 BY RPP-WTP
HYDRO-TEST PRESSURE	~~[illegible]~~ + 13.3 psig S.H.
DESIGN TEMPERATURE	~~[illegible]~~ 230°F BY RPP-WTP
MDMT	~~[illegible]~~
CODE	ASME SECTION VIII, DIVISION 1, 2001 EDITION, 2001 ADDENDUM
CODE STAMP (National Board No.)	REQUIRED
NON-DESTRUCTIVE TESTING	VT, UT, PT, RT, HELIUM TESTING, AND HYDROSTATIC TESTING PER ASME SECT. VIII, DIV. 1
RADIOGRAPH (5)	PER PARA. 6.5.3 OF SPECIFICATION 24590-WTP-3PS-MV00-00006
JOINT EFFICIENCY	PER UW-12
CORROSION ALLOWANCE	0.04"
INSPECTION OPENING	REQUIRED PER UG-46(a)
IMPACT TESTING	NOT REQUIRED PER UHA-51(d)
POSTWELD HEAT TREATING	NOT REQUIRED PER UHA-32
MATERIAL, BOLTS/STUDS/NUTS	NOT APPLICABLE
MATERIAL, GASKETS	NOT APPLICABLE
INSULATION	NOT REQUIRED
WIND DESIGN	NOT REQUIRED
SNOW DESIGN	NOT REQUIRED
SEISMIC DESIGN	SC-I PER 24590-WTP-3PS-MV00-T0002 & 24590-WTP-3PS-SS90-T0001
BECHTEL QUALITY LEVEL	QL-1

(1) (1A) (2) CONNECTION SCHEDULE

MK	SIZE	NECK MATERIAL	NECK THK	HEAT NO.	DESCRIPTION	ELEV. "Z"	"X"	RADIUS FROM CENTER	TYPE	CONN. THK
N05	2" OD	MACHINED SA-182-F316 w/ 0.030% max. C	SPCL		TEMPERATURE	307"	52"	50"	STUB	¾" SCH 10
N06	6" NPS	SEAMLESS SA-312-TP316 w/ 0.030% max. C	SCH 80		INSTRUMENTATION	309"	54"	50"	STUB	NA
N06A	1" NPS	SEAMLESS SA-312-TP316 w/ 0.030% max. C	SCH 160		BALANCE	314"	54"	50"	STUB	1" SCH 40
N06B	1" NPS	SEAMLESS SA-312-TP316 w/ 0.030% max. C	SCH 160		DENSITY	315"	60"	50"	STUB	1" SCH 40
N06C	1" NPS	SEAMLESS SA-312-TP316 w/ 0.030% max. C	SCH 160		LEVEL	316"	61"	50"	STUB	1" SCH 40
N07	2" NPS	~~SEAMLESS SA-312-TP316 w/ 0.030% max. C~~	~~SCH 80~~		INLET	248"	48"	(4) 60"	STUB	2" SCH 40
N09	2" NPS	SEAMLESS SA-312-TP316 w/ 0.030% max. C	SCH 80		INLET	303"	48"	45"	STUB	2" SCH 40
N10	2" NPS	~~SEAMLESS SA-312-TP316 w/ 0.030% max. C~~	~~SCH 80~~		INLET	303"	48"	45"	STUB	2" SCH 40
N11	2" NPS	SEAMLESS SA-312-TP316 w/ 0.030% max. C	SCH 80		INLET/AIR PURGE	(4) 242¾"	37⅝"	70"	STUB	2" SCH 40
N12	2" OD	MACHINED SA-182-F316 w/ 0.030% max. C	SPCL		AIR/VAC TO UFP-VSL-00025	(4) 249⅝"	36⅝"	72"	STUB	1" SCH 40
N13	2" OD	MACHINED SA-182-F316 w/ 0.030% max. C	SPCL		OUTLET/SAMPLE (UFP-RFD-00046) (4)	306½"	31½"	30"	STUB	1" SCH 40
N14	2" NPS	SEAMLESS SA-312-TP316 w/ 0.030% max. C	SCH 80		SAMPLE RETURN	303"	48"	46"	STUB	2" SCH 40
N16	2" NPS	SEAMLESS SA-312-TP316 w/ 0.030% max. C	SCH 160		AIR/VAC TO UFP-PJM-00075	248"	48"	60"	STUB	2" SCH 40
N17	2" NPS	SEAMLESS SA-312-TP316 w/ 0.030% max. C	SCH 160		OUTLET TO EJECTOR	NA	NA	NA	STUB	2" SCH 40
N18	2" NPS	SEAMLESS SA-312-TP316 w/ 0.030% max. C	SCH 160		AIR/VAC TO UFP-PJM-00076	303"	48"	45"	STUB	2" SCH 40
N19	2" NPS	SEAMLESS SA-312-TP316 w/ 0.030% max. C	SCH 160		AIR/VAC TO UFP-PJM-00077	248"	48"	60"	STUB	2" SCH 40
N20	2" NPS	SEAMLESS SA-312-TP316 w/ 0.030% max. C	SCH 160		AIR/VAC TO UFP-PJM-00078	303"	48"	46"	STUB	2" SCH 40
N21	2" NPS	SEAMLESS SA-312-TP316 w/ 0.030% max. C	SCH 160		AIR/VAC TO FRD-PJM-00010	248"	48"	60"	STUB	2" SCH 40
N22	6" NPS	SEAMLESS SA-312-TP316 w/ 0.030% max. C	SCH 80		OUTLET/VESSEL VENT	311"	56"	CENTER	STUB	6" SCH 10
N23	3" NPS	SEAMLESS SA-312-TP316 w/ 0.030% max. C	SCH 80		AIR/VAC TO UFP-VSL-00023	241"	56"	72"	STUB	3" SCH 40
N24	3" NPS	SEAMLESS SA-312-TP316 w/ 0.030% max. C	SCH 80		AIR/VAC TO UFP-VSL-00024	241"	56"	72"	STUB	3" SCH 40
N25	3" NPS	SEAMLESS SA-312-TP316 w/ 0.030% max. C	SCH 80		AIR/VAC TO UFP-VSL-00064	243"	38"	64"	STUB	3" SCH 40
N26	3" NPS	SEAMLESS SA-312-TP316 w/ 0.030% max. C	SCH 80		AIR/VAC TO UFP-VSL-00010	243"	38"	64"	STUB	3" SCH 40
N28	4" NPS	SEAMLESS SA-312-TP316 w/ 0.030% max. C	SCH 80		OUTLET FROM UFP-RFD-00044	311"	56"	12"	STUB	4" SCH 40
N29	4" NPS	SEAMLESS SA-312-TP316 w/ 0.030% max. C	SCH 80		OUTLET FROM UFP-RFD-00045 (4)	310¾"	55⅝"	12"	STUB	4" SCH 40
N30	4" NPS	SEAMLESS SA-312-TP316 w/ 0.030% max. C	SCH 80		OUTLET FROM UFP-RFD-00043	310"	55"	16"	STUB	4" SCH 40
N32	4" NPS	SEAMLESS SA-312-TP316 w/ 0.030% max. C	SCH 80		OUTLET FROM UFP-RFD-00042 (4)	309⅞"	54⅞"	16"	STUB	4" SCH 40
N34	2" NPS	~~SEAMLESS SA-312-TP316 w/ 0.030% max. C~~	~~SCH 80~~		INLET TO WASH RING	248"	38"	70"	STUB	2" SCH 40
N35	2" NPS	SEAMLESS SA-312-TP316 w/ 0.030% max. C	SCH 80		INLET TO WASH RING	245"	38"	70"	STUB	2" SCH 40
N36	2" NPS	SEAMLESS SA-312-TP316 w/ 0.030% max. C	SCH 80		INLET TO WASH RING	249"	38"	70"	STUB	2" SCH 40
N37	6" NPS	SEAMLESS SA-312-TP316 w/ 0.030% max. C	SCH 80		OUTLET/OVERFLOW	NA	NA	NA	STUB	6" SCH 10
N38	2" NPS	SEAMLESS SA-312-TP316 w/ 0.030% max. C	SCH 80		SPARE	(4) 240⅞"	33⅛"	72"	STUB	CAPPED
N39	24" OD	WELDED SA-240-316 w/ 0.030% max C	½"		MANWAY (TACKED CAP)	305"	50"	34"	STUB	CAPPED
N40	3" NPS	SEAMLESS SA-312-TP316 w/ 0.030% max. C	SCH 80		SPARE	245"	38"	70"	STUB	3" SCH 40
N41	2" NPS	SEAMLESS SA-312-TP316 w/ 0.030% max. C	SCH 160		AIR/VAC TO UFP-PJM-00101	303"	48"	45"	STUB	2" SCH 40
N44	4" NPS	SEAMLESS SA-312-TP316 w/ 0.030% max. C	SCH 80		OUTLET FROM UFP-RFD-00048 (4)	310½"	55½"	12"	STUB	4" SCH 40
N45	3" NPS	SEAMLESS SA-312-TP316 w/ 0.030% max. C	SCH 80		AIR/VAC TO UFP-VSL-00064	243"	38"	64"	STUB	3" SCH 40
N46	2" NPS	SEAMLESS SA-312-TP316 w/ 0.030% max. C	SCH 80		FORCED AIR PURGE	303"	48"	45"	STUB	2" SCH 40

(1) (1A) (3) BILL OF MATERIALS

MK	THICK/SIZE	MATERIAL	HEAT NO.	DESCRIPTION	QTY
1	⅜"	SA-240-316 w/ 0.030% max. C		SHELL	1
2	⅜" NOM.	SA-240-316 w/ 0.030% max. C		TOP HEAD - 180" I.D. 2:1 SE w/ 2" S.F. (⅜" MIN. AFTER FORMING)	1
3	⅜" NOM.	SA-240-316 w/ 0.030% max. C		BOTTOM HEAD - 180" I.D. 2:1 SE w/ 2" S.F. (⅜" MIN. AFTER FORMING)	1
4					
5	¾"	SA-240-304 w/ 0.030% max. C		SUPPORT SKIRT	1
6	½"	SA-240-304 w/ 0.030% max. C		SUPPORT RING BEAM TOP	1
7	1"	SA-240-304 w/ 0.030% max. C		SUPPORT RING BEAM SHELL	1
8	1½"	A-572-GR50		SUPPORT RING BEAM BOTTOM	1
9					
10	1"	SA-240-304 w/ 0.030% max. C		TAILING LUG BACKING PLATE - 20" x 20"	1
11	2"	SA-240-304 w/ 0.030% max. C		TAILING LUG	1
12	1"	SA-240-304 w/ 0.030% max. C		TAILING LUG GUSSET	1
13	—	———		DELETED	-
14					
15					
16					
17	1"	SA-240-316 w/ 0.030% max. C		LIFTING TRUNNION REPAD - 22" O.D.	2
18	½"	SA-240-304 w/ 0.030% max. C		LIFTING TRUNNION BARREL - 18" O.D. x 4" LONG	2
19	½"	SA-240-304 w/ 0.030% max. C		LIFTING TRUNNION KEEPER PLATE - 24" O.D.	2
20					
21	½"	SA-240-316 w/ 0.030% max. C		INSTRUMENT ASSEMBLY COVER PLATE	1
22	¼" x 1"	SA-240-316 w/ 0.030% max. C		INSTRUMENT ASSEMBLY SPACERS	25
23	2" SCH 160	SMLS. SA-312-TP316 w/ 0.030% max. C		BUBBLER SHELL	2
24	2" x 1"	SMLS. SA-312-TP316 w/ 0.030% max. C		BUBBLER REDUCER - 2 x 1, SCH 160	2
25	⅜" NOM.	SA-182-F316 w/ 0.030% max. C		MANWAY HEAD, 24" O.D. ASME F&D w/ 1½" S.F.	1
26					
27					
28					
29					
30	1½"Ø	SA-182-F316 w/ 0.030% max. C		THERMOWELL POCKET (MACHINE PER DETAIL)	1
31	1" SCH 160	SMLS. SA-312-TP316 w/ 0.030% max. C		THERMOWELL DIP TUBE	2
32	2" SCH 40	SMLS. SA-312-TP316 w/ 0.030% max. C		WASH RING PIPE	1
33	⅜"	SA-240-316 w/ 0.030% max. C		WASH RING END CAP PLATE	6
34	⅜" x 2"	SA-240-316 w/ 0.030% max. C		WASH RING SUPPORTS	6
35	2" SCH 40	SMLS. SA-403-WP316S w/ 0.030% max. C		WASH RING TEE - 2" SCH 40 STRAIGHT TEE	3
36					
37	5/16"	SA-240-316 w/ 0.030% max. C		NAMEPLATE BRACKET 14" x 14" (7" x 2" LEGS) (4)	1
38	~~[illegible]~~	~~[illegible]~~		~~INTERNAL PIPING SUPPORTS [illegible]~~	~~[illegible]~~
39	MISC.	SA-240-316 w/ 0.030% max. C		PULSE JET MIXER (8) - SEE DWG. 3005A FOR DETAILS	8
40	MISC.	SA-240-316 w/ 0.030% max. C		CHARGE VESSEL (36") - SEE DWG. 3005B FOR DETAILS	3
41	—	———		DELETED	-
42	MISC.	SA-240-316 w/ 0.030% max. C		CHARGE VESSEL (50") - SEE DWG. 3005D FOR DETAILS	2
43	½"	SA-240-304 w/ 0.030% max. C		SKIRT ACCESS (24" Ø)	2
44	MISC.	SA-240-316 w/ 0.030% max. C		CHARGE VESSEL (18") - SEE DWG. 3005E FOR DETAILS	1
45	4" SCH 40	SA-312-TP316 w/ 0.030% max. C		SKIRT VENT (4⅝")	4
46	~~1" SCH 160~~	~~SA-312-TP316 w/ 0.030% max. C~~		~~INTERNAL PIPING SUPPORT~~	~~[illegible]~~
47	STD.	SA-403-316 w/ 0.030% max. C		2" SCH 80 CAP	1
48	~~[illegible]~~	~~SA-240-316 w/ 0.030% max. C~~		~~INTERNAL PIPING SUPPORT [illegible]~~	~~[illegible]~~
49	~~[illegible] x 2"~~	~~SA-240-316 w/ 0.030% max. C~~		~~INTERNAL PIPING LOWER SUPPORT~~	~~[illegible]~~
50	6" SCH 80	SA-312-TP316 w/ 0.030% max. C		CONNECTING PIPE, LENGTH A/R	5
51	1"	SA-240-316 w/ 0.030% max. C		INSERT PLATE (15" OD)	1
52	Sch 160	SA-403WP-316 w/ 0.030% max. C		4" x 3" ECC. REDUCER - ENDS MACHINED TO SCH 80	5
53	4" SCH 80	SA-312-TP316 w/ 0.030% max. C		CONNECTING PIPE, LENGTH A/R	3
54	4" SCH 80	SA-312-TP316 w/ 0.030% max. C		CONNECTING PIPE, LENGTH A/R	2
55	~~[illegible]~~	~~SA-240-316 w/ 0.030% max. C~~		~~INTERNAL PIPING SUPPORT [illegible] U-BOLT FOR 1" PIPE~~	~~[illegible]~~
56	1" SCH 160	SA-312-TP316 w/ 0.030% max. C		CONNECTING PIPE, LENGTH A/R	1
57	1" SCH 160	SA-312-TP316 w/ 0.030% max. C		CONNECTING PIPE, LENGTH A/R	1
58	~~1½" SCH 160~~	~~SA-312-TP316 w/ 0.030% max. C~~		~~INTERNAL PIPING SUPPORT~~	~~[illegible]~~

DELETE LINE ITEMS 38, 46, 48, 49, 55, 58
NOTE ITEM 49 IS DELETED AS REQUIRED. BY RPP-WTP

ADD ITEMS 59 & 60, BY RPP-WTP

(4)

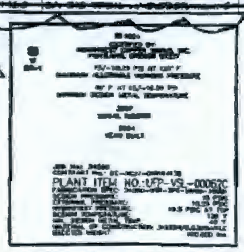

(4) (3) (1A)

DELETE AND REPLACE BY RPP-WTP

GENERAL NOTES and SPECIAL REQUIREMENTS

1. NWC Quality Assurance Manual ASME NQA-1 applies in its entirety for this project.
2. All material, including weld wire, for this project shall be purchased from approved Level 3 & 4 suppliers.
3. All 316SS material, including weld wire, shall be PMI tested and approved prior to use.
4. No deviations from this drawing is allowed without Bechtel approval.
5. The base of the vessel support skirt and ring beam shall be marked after shop assembly, using a line of welding bead, at the 0° Orientation as shown on the drawing. Skirt base to be suitably reinforced prior to shipment.
6. A datum line shall be marked on the heads with low stress stamping 2" away from the head/shell seam.
7. Contact materials shall be approved prior to use. This is to include marking material, lubricants, tape, anti-spatter spray, harmful metals or salts such as zinc, lead, or copper, etc. Total halogens in the contact materials shall be less than 200 ppm.
8. Fabrication tolerance shall be in accordance with Bechtel drawing Pressure Vessel Tolerances Standard Details DWG. # 24590-WTP-MV-M59T-00001.
9. Plate 3/8" and over in thickness shall not be sheared to size. All lubricants, burrs, and debris shall be removed after cutting.
10. Internal piping bends shall have a center line radius of four times the pipe nominal diameter. A pipe shall not be terminated or butt-welded within 4" of the bend.
11. Longitudinal seams shall be completed and have successfully passed any NDE prior to welding any adjoining circumferential seams.
12. Manway cover head shall be prepared for field welding, tacked into place with 4 @ ½" long tacks 90° apart, sealed to prevent dirt and water entry, and marked with the item number.
13. Nozzles shall be prepared for field welding, shall be covered with a hard rubber or plastic cap, and shall be sealed to prevent dirt or water entry.
14. All attachments e.g. lugs, brackets, nozzles and other members shall follow the contour of the surface to which they will be attached. The gap at the exposed edges shall not exceed 1/16" prior to welding.
15. All attachments that use only fillet welds shall have a maximum gap of 1/8" between the components being joined.
16. All temporary attachments shall be 316 stainless steel.
17. All temporary attachments shall be removed prior to hydrostatic test.
18. PMI to be performed on all pressure retaining items including welds after fabrication.

UT per ASME Section VIII Div. 1 Appendix 12 (4)

1. The shell and head sections under the lifting lugs, tailing lugs, and internal vessel supports shall be ultrasonically examined over 100% of the area that extends 3" beyond each side of the perimeter of the proposed fillet weld-attachment to the shell or head.
2. All welds attaching internal or external components to the shell or heads shall be ultrasonically examined. This examination does not include nozzle to vessel wall welds.
3. All shell and head sections for 3" around nozzle penetrations shall be ultrasonically examined prior to welding.
4. All nozzle welds to the shell or head with internal projection shall be ultrasonically examined.

PT per ASME Section VIII Div. 1 Appendix 8 (1A) (3) (4)

1. All welds over 3/4" in 304 & 316 series Stainless Steel shall be dye penetrant examined.

CHANGE TO UW-51 BY RPP-WTP

RT per ASME Section VIII Div. 1 ~~Appendix 4~~ (1A) (3) (4)

1. All butt welds in the shell shall be 100% radiographically examined.
2. All nozzle welds to the shell or head without internal projection shall be radiographically examined.
3. Butt welds in internal piping shall be radiographically examined. This does not include internal pipe supports and braces.
4. All butt welds in the nozzle necks shall be radiographically examined.
5. All thermowell socket welds shall be radiographically examined.

OPERATING: 512,285 lbs
FULL WATER: 401,100 lbs
EMPTY: 103,000 lbs
BY RPP-WTP

Helium Leak Test

1. All thermowell socket welds shall be helium leak tested.

24590-PTF-MV-UFP-VSL-00062C

Bechtel National, Inc.
SUPPLIER DOCUMENT STATUS
1. [X] Work may proceed.
2. [ ] Revise and resubmit. Work may proceed subject to resolution of indicated comments.
3. [ ] Revise and resubmit. Work may not proceed.
4. [ ] Review not required. Work may proceed.
Permission to proceed does not constitute acceptance or approval of design details, calculations, analyses, test methods, or materials developed or selected by the supplier and does not relieve supplier from full compliance with contractual obligations.
REVIEWED M HK
G-321 Document Category 1-1
Accepted by H. K. [illegible] 01/12/05

REVISIONS

NO	DESCRIPTION	REV BY	APD BY	DATE
5	UPDATED RADIOGRAPH SPEC REFERENCE	SMT	MJV	12/06/04
4	REVISED PER CUSTOMER COMMENTS & ENGINEERING CHANGES	SMT	MJV	11/05/04
3	REVISED PER CUSTOMER COMMENTS & ENGINEERING CHANGES	SMT	MJV	08/08/04
2	REVISED PER CUSTOMER COMMENTS & ENGINEERING CHANGES	MDH	MJV	09/03/03
1A	REVISED PER CUSTOMER COMMENTS & ENGINEERING CHANGES	MDH	MJV	07/18/03
1	REVISED PER CUSTOMER COMMENTS & ENGINEERING CHANGES	MJV	MDH	04/28/03

ESTIMATED WEIGHT (IN LBS)
OPERATING - ~~[illegible]~~
FULL WATER - ~~[illegible]~~
EMPTY - ~~[illegible]~~

NORTHWEST COPPER WORKS, INC.
1305 N. RIVER STREET • PORTLAND, OREGON • 97227

180" I.D. ULTRAFILTER PERMEATE COLLECTION VESSEL

BECHTEL NATIONAL INC. 3000 George Washington Way Richland, Washington 99352		EQUIP. NO. UFP-VSL-00062C
		P.O. NO. 24590-QL-POD-MVA0-00001 REV [illegible]
SCALE AS NOTED	JOB NO. 3007	DWG. NO. D- 3007 / REV 5
DATE 01/17/03	CHKD. BY KRT	
DWN. BY MDH	APPD. BY MDH	SHT. NO. 1 OF 8

BECHTEL NATIONAL INC. FOR D.O.E. RIVER PROTECTION PROJECT IN RICHLAND, WA

~~REF. DWG 24590-PTF-MV-UFP-00003 REV 0~~ → DELETED BY RPP-WTP

BECHTEL DOC. 24590-QL-POD-MVA0-00001-03-07 REV. 00E F

Some information on all page(s) may appear to be illegible, however, the information necessary for assuring adequate design is legible.

P:\Swap\ACAD\03\D3007-5 Mon Dec 06 10:03:47 2004

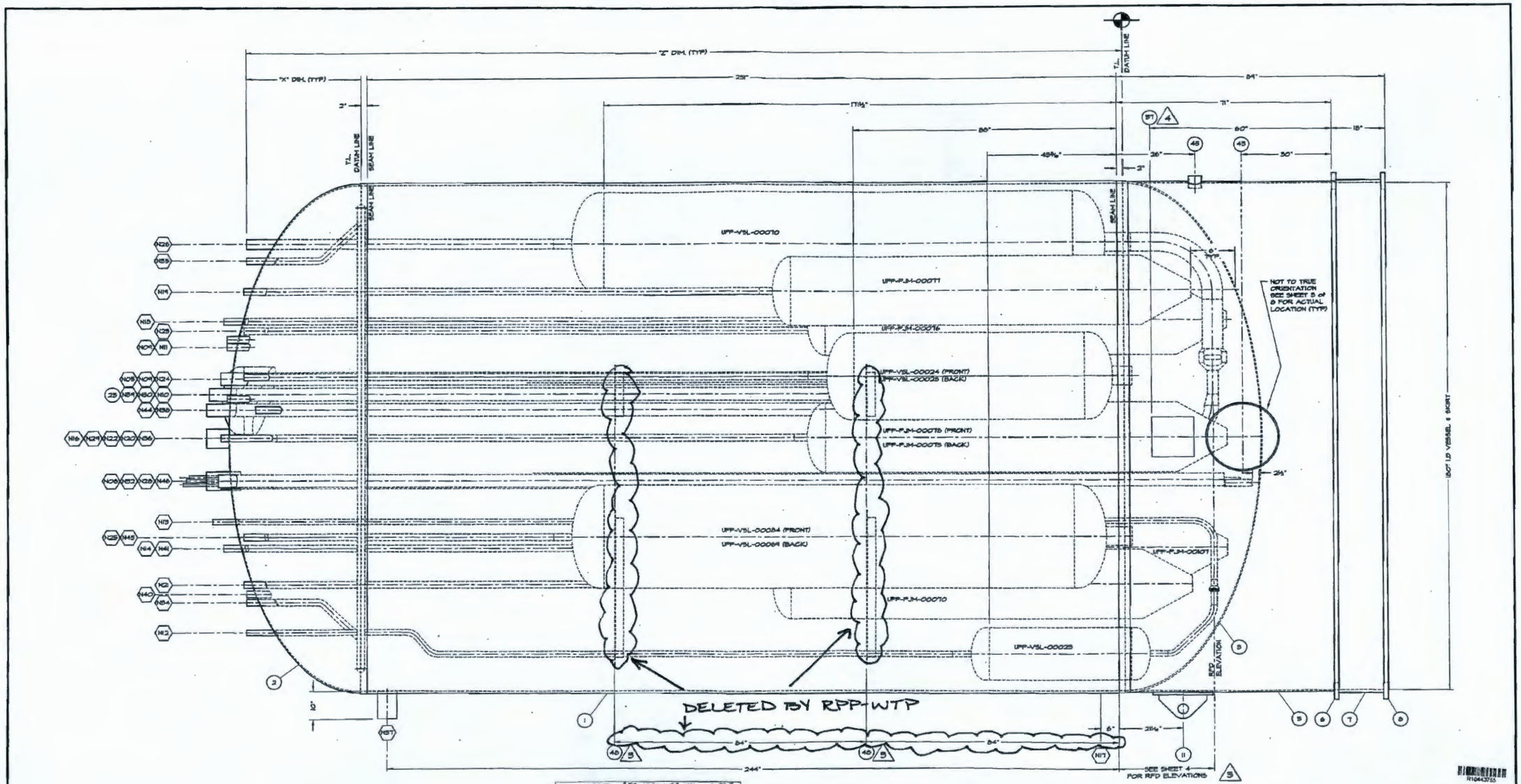

VESSEL ELEVATION
SCALE: ¼" = 1'-0"

Some information on all page(s) may appear to be illegible, however, the information necessary for assuring adequate design is legible.

24590-PTF-MV-VFE-VSL-00062C

REVISIONS

No	DESCRIPTION	REV BY	APD BY	DATE
5	NO CHANGES	SHT	MJV	12/06/04
4	ADDED NAMEPLATE ELEVATION	SHT	MJV	11/05/04
3	REVISED PER CUSTOMER COMMENTS & ENGINEERING CHANGES	SHT	MJV	08/06/04
2	REVISED PER CUSTOMER COMMENTS & ENGINEERING CHANGES	MDH	MJV	04/23/03
1A	REVISED PER CUSTOMER COMMENTS & ENGINEERING CHANGES	MDH	MJV	01/16/03
1	REVISED PER CUSTOMER COMMENTS & ENGINEERING CHANGES	MJV	MDH	04/26/02

NORTHWEST COPPER WORKS, INC.
1305 N. RIVER STREET • PORTLAND, OREGON • 97227

180" I.D. ULTRAFILTER
PERMEATE COLLECTION VESSEL ELEVATION

BECHTEL NATIONAL INC.
3000 George Washington Way
Richland, Washington 99352

EQUIP. NO. UFP-VSL-00062C
P.O. NO. 24590-QL-POD-MVAO-00001 REV 0
SCALE ¼" = 1'-0"
JOB NO. 3007
DWG. NO. D-3007
REV 5
DATE 01/11/05
CHKD. BY KRT
DWN. BY MDH
APPD. BY MDH
SHT. NO. 2 OF 8

~~REF. DWG. D-3045 FOR MAT'L SPEC. 00005-MS-01~~
BECHTEL DOC. 24590-QL-POD-MVAO-00001-03-05 REV. 00E.F
DELETED BY RPP-WTP

P:\Seap\ACAD\03\03007-5 Mon Dec 06 10:03:37 2004

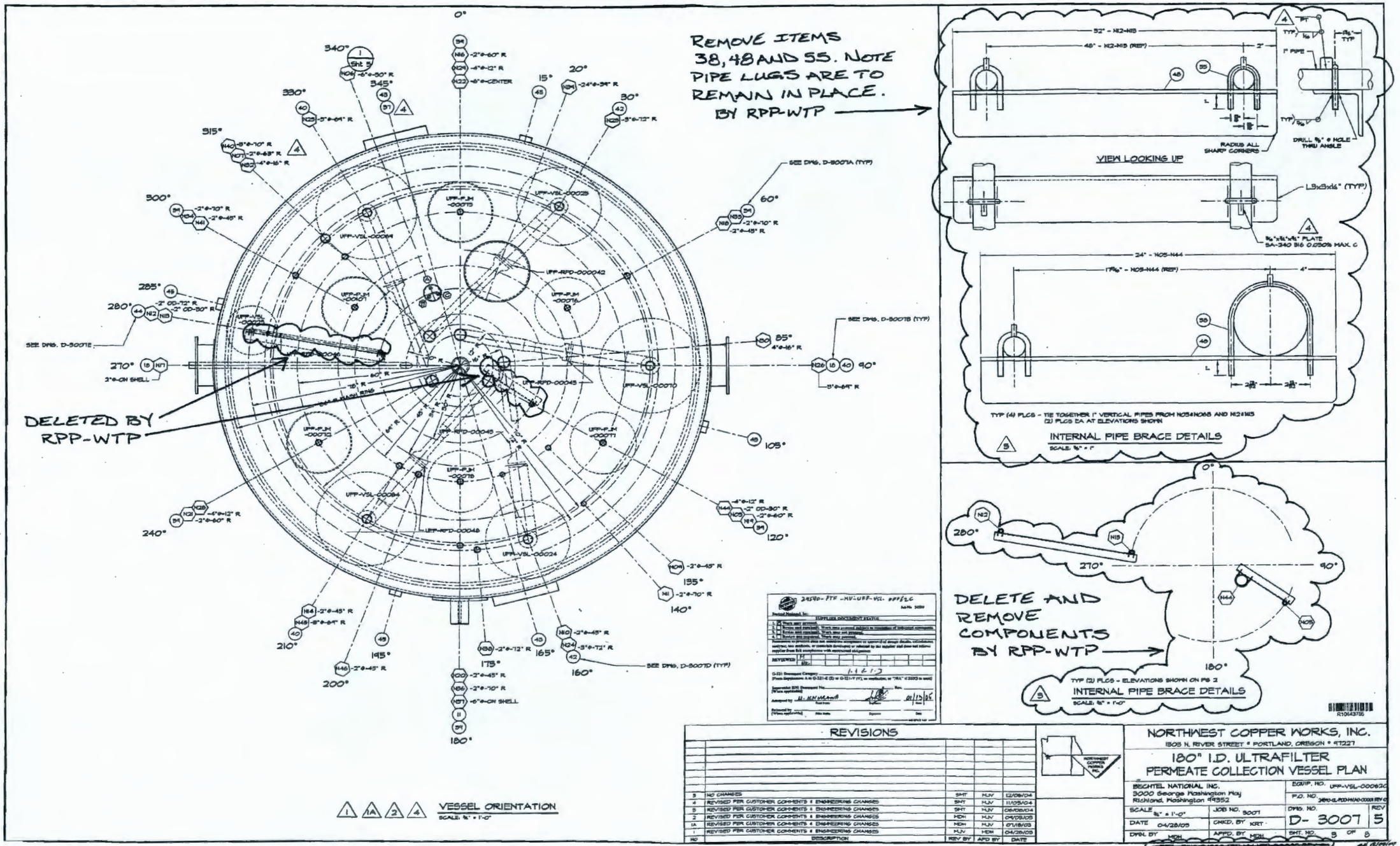

REVISIONS				
5	NO CHANGES	SHT	HJV	12/08/04
4	REVISED PER CUSTOMER COMMENTS & ENGINEERING CHANGES	SHT	HJV	11/05/04
3	REVISED PER CUSTOMER COMMENTS & ENGINEERING CHANGES	SHT	HJV	06/08/04
2	REVISED PER CUSTOMER COMMENTS & ENGINEERING CHANGES	HDH	HJV	04/05/03
1A	REVISED PER CUSTOMER COMMENTS & ENGINEERING CHANGES	HDH	HJV	07/18/03
1	REVISED PER CUSTOMER COMMENTS & ENGINEERING CHANGES	HJV	HDH	04/28/03
NO	DESCRIPTION	REV BY	APD BY	DATE

NORTHWEST COPPER WORKS, INC.
1808 N. RIVER STREET • PORTLAND, OREGON • 97227

180" I.D. ULTRAFILTER
PERMEATE COLLECTION VESSEL PLAN

BECHTEL NATIONAL, INC. 3000 George Washington Way Richland, Washington 99352		EQUIP. NO. UFP-VSL-00062C	
		P.O. NO. 24590-QL-POD-HVAC-00001 REV 0	
SCALE 3/8" = 1'-0"	JOB NO. 3007	DWG. NO. D- 3007	REV 5
DATE 04/28/03	CHKD. BY KRT		
DWN. BY HDH	APPD. BY HDH	SHT. NO. 3 OF 8	

~~BECHTEL DWG. 24590-PTF-HV-UFP-00002 REV 0~~ AS REVISED
BECHTEL DOC. 24590-QL-POD-HVAC-00001-03-01 REV. 00K P
DELETED BY RPP-WTP

Swep\ACAD\03\D3007-5 Mon Dec 06 10:03:27 2004

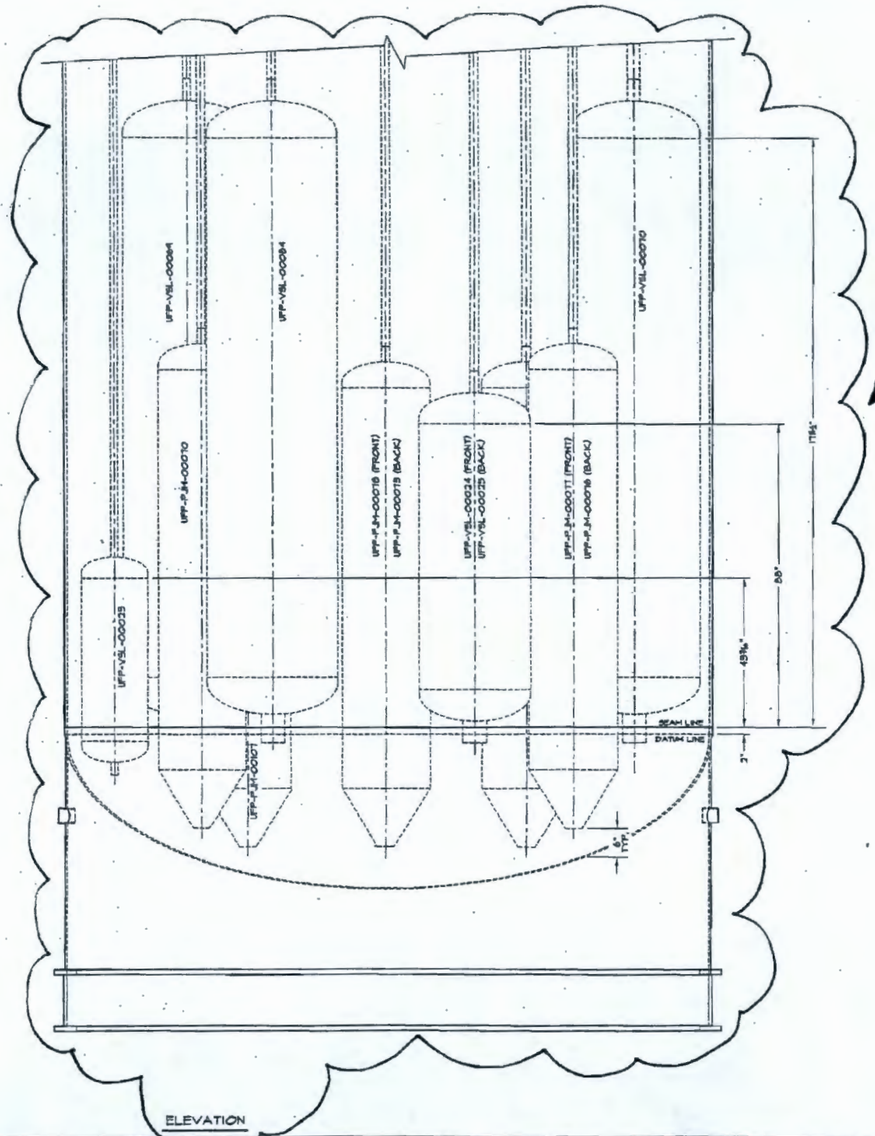

ELEVATION

DELETED BY RPP-WTP

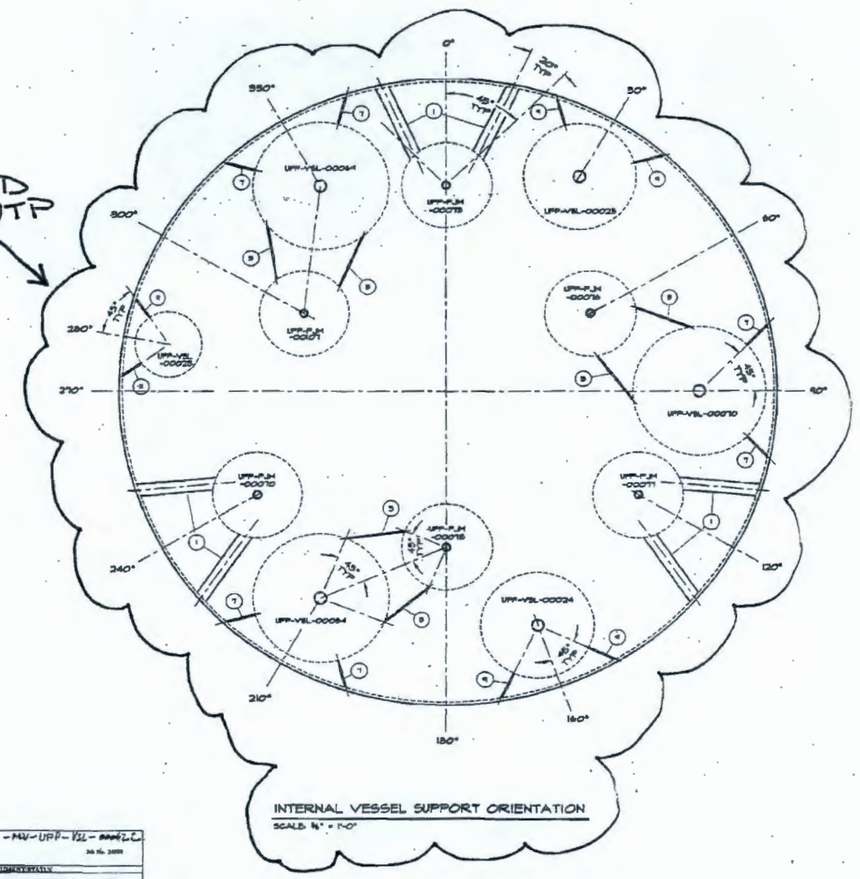

INTERNAL VESSEL SUPPORT ORIENTATION
SCALE ⅛" = 1'-0"

24590-PTF-MV-UFP-VSL-00062.C
Job No. 24590
Bechtel National, Inc.
REVIEWER'S DOCUMENT STATUS
A - Work may proceed.
B - Proceed as noted. Work may proceed.
C - Revise and resubmit. Work may not proceed.
Notwithstanding review and approval of drawings, details, calculations, analyses, test methods, or materials developed or selected by the supplier and does not relieve supplier from full compliance with contractual obligations.
REVIEWED BY: MK
G-321 Concrete Category ____ Seismic Requirements As in G-021-H-00 or G-321-A (1) as applicable, or "NOA" if ASME or none.
Supplied KKF Document No. ____ Rev ____
If less applicable:
Submitted by: MARK LEE — Date: 05/05/04
Reviewed by (if not applicable): Name ____ Signature ____ Date ____

Some information on all page(s) may appear to be illegible, however, the information necessary for assuring adequate design is legible.

BILL OF MATERIALS

MK	THICK/SIZE	MATERIAL	HEAT NO.	DESCRIPTION	QTY
1	4" SCH 40	WELDED SA-50-TP316 w/ 0.050% max. C		OUTER PULSE JET MIXER SUPPORT PIPE	12
2					
3	½"	SA-240-316 w/ 0.050% max. C		INNER PULSE JET MIXER SUPPORT PLATE	12
4					
5					
6					
7	½"	SA-240-316 w/ 0.050% max. C		36" CHARGE VESSEL SUPPORT PLATE	12
8					
9	½"	SA-240-316 w/ 0.050% max. C		50" CHARGE VESSEL SUPPORT PLATE	4
10					
11	½"	SA-240-316 w/ 0.050% max. C		18" CHARGE VESSEL SUPPORT PLATE	2

CONSTRUCTION NOTES

NOTE 2: Where plate material is specified as ASME SA240, ASME SA479 material may be substituted.

→ ADD NOTE, BY RPP-WTP

REVISIONS

NO	DESCRIPTION	REV BY	APD BY	DATE
2	REVISED PER ENGINEERING CHANGES	SHT	VDH	06/23/04
1	REVISED PER CUSTOMER COMMENTS	MJV	VDH	04/08/03

NORTHWEST COPPER WORKS INC.

NORTHWEST COPPER WORKS, INC.
1503 N. RIVER STREET • PORTLAND, OREGON • 97227

180" I.D. ULTRAFILTER PERMEATE VESSEL INTERNAL SUPPORT

BECHTEL NATIONAL INC.
3000 George Washington Way
Richland, Washington 99352

EQUIP. NO. UFP-VSL-00062C
P.O. NO. 24590-QL-POS-MVAO-00001 REV 0

SCALE AS NOTED	JOB NO. 3007F	DWG. NO. D-3007F	REV 2
DATE 06/06/03	CHKD. BY MDH		
DWN. BY MJV	APPD. BY MJV	SHT. NO. 1 OF 2	

BECHTEL DOC. No. 24590-QL-POS-MVAO-00001-05-00 REV 00

R1035785

P:\Swap\ACAD\03\D3007F-2.dwg, 6/8/2004 10:27:20 AM

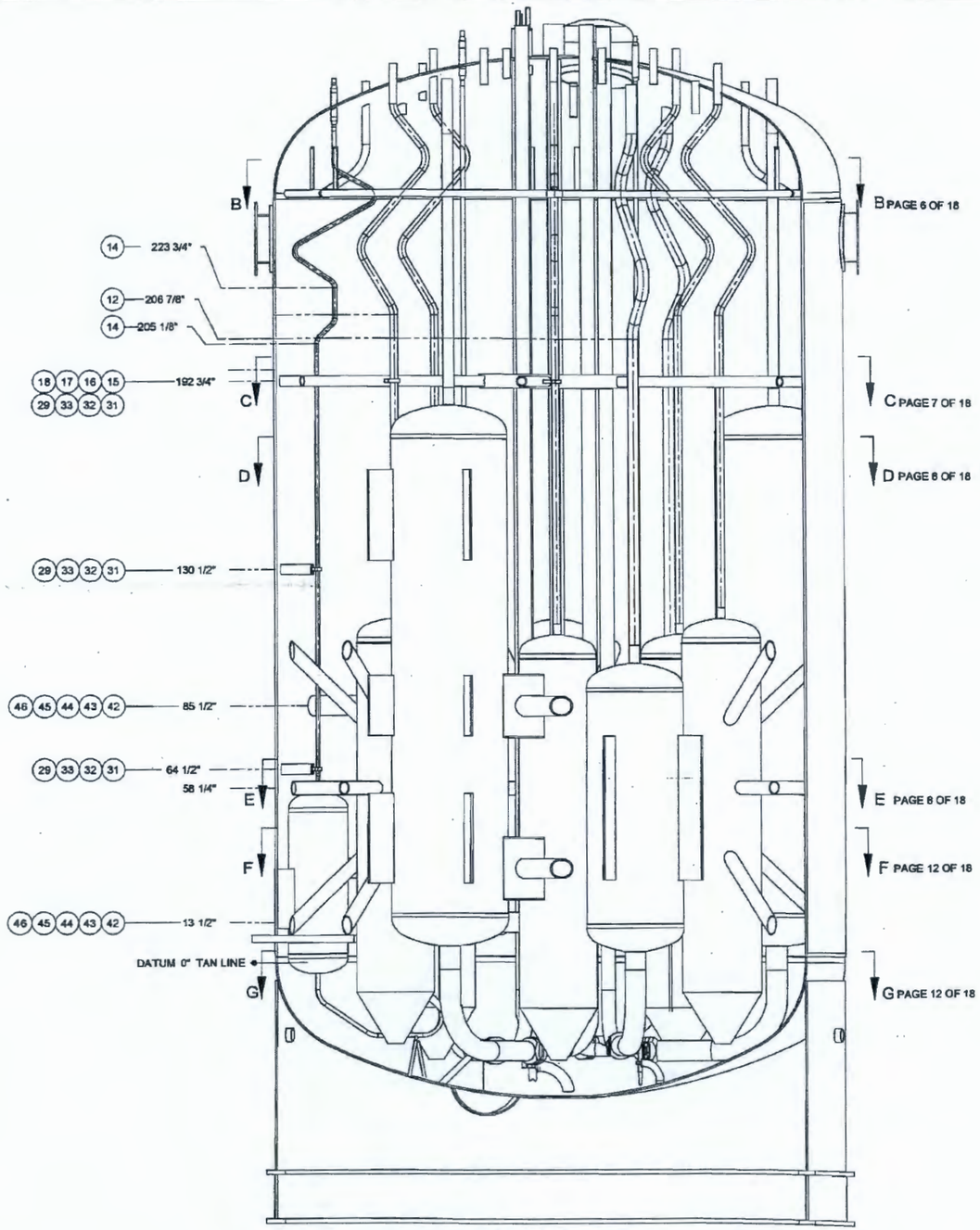

NORTH ELEVATION

BILL OF MATERIALS

MK	THICK/SIZE	MATERIAL	HEAT NO.	DESCRIPTION	QTY
12	3" SCHED 80S	SA 312 TP 316/316L 0.030% MAX C		SMLS PIPE, THERMAL EXPANSION S-BEND	2
13	2" SCHED 80S	SA 312 TP 316/316L 0.030% MAX C		SMLS PIPE, THERMAL EXPANSION S-BEND	6
14	1" SCHED 80S	SA 312 TP 316/316L 0.030% MAX C		SMLS PIPE, THERMAL EXPANSION S-BEND	1
15	4" SCHED 80S	SA 312 TP 316/316L 0.030% MAX C		SMLS PIPE, CENTER SUPPORT	1
16	3" SCHED 80S	SA 312 TP 316/316L 0.030% MAX C		SMLS PIPE, RADIAL SUPPORT	6
		NOT USED			
		NOT USED			
19	3/4"X 6 1/4"	SA 240 TP 316/316L 0.030% MAX C		PLATE, 4" GUIDE RING SUPPORT	2
20	3/4"X 6 1/4"	SA 240 TP 316/316L 0.030% MAX C		PLATE, 4" GUIDE RING SUPPORT	3
21	3/4"X 1"	SA 240 TP 316/316L 0.030% MAX C		PLATE, 4" GUIDE RING	15
22	1/2"X 1"	SA 240 TP 316/316L 0.030% MAX C		PLATE, 2" GUIDE RING	7
23	1"X 3 5/8"	SA 240 TP 316/316L 0.030% MAX C		PLATE, 2" GUIDE RING SUPPORT	3
24	1"X 3 5/8"	SA 240 TP 316/316L 0.030% MAX C		PLATE, 2" GUIDE RING SUPPORT	2
		NOT USED			
26	1"X 3 5/8"	SA 240 TP 316/316L 0.030% MAX C		PLATE, 2" GUIDE RING SUPPORT	1
		NOT USED			
28	1/2"X 2 1/2"	SA 240 TP 316/316L 0.030% MAX C		PLATE, 1" GUIDE RING SUPPORT	1
29	1/2"X 1"	SA 240 TP 316/316L 0.030% MAX C		PLATE, 1" GUIDE RING	13
30	1/2"X 2 1/2"	SA 240 TP 316/316L 0.030% MAX C		PLATE, 1" GUIDE RING SUPPORT	2
31	3" SCHED 80S	SA 312 TP 316/316L 0.030% MAX C		SMLS PIPE	3
32	1/2"	SA 240 TP 316/316L 0.030% MAX C		PLATE, Ø 3 1/2"	3
33	1"X 1"X 2 1/2"	SA 240 TP 316/316L 0.030% MAX C		PLATE	3
34	6" SCHED 80S	SA 312 TP 316/316L 0.030% MAX C		SMLS PIPE, KICKER SUPPORT	6
35	1/2" MIN	SA 240 TP 316/316L 0.030% MAX C		KICKER SUPPORT PLATE	12
36	4" SCHED 80S	SA 312 TP 316/316L 0.030% MAX C		SMLS PIPE, OUTER PJM SUPPORT	6
37	1/2" MIN	SA 240 TP 316/316L 0.030% MAX C		36" CHARGE VESSEL SUPPORT PLATE	4
38	2" SCHED 160S	SA 312 TP 316/316L 0.030% MAX C		SMLS PIPE	1
39	1/2"X 2 3/4"X 2 3/4"	SA 240 TP 316/316L 0.030% MAX C		PLATE	1
40	3" SCHED 160S	SA 312 TP 316/316L 0.030% MAX C		SMLS PIPE	1
41	1/2"X 3 7/8"X 3 7/8"	SA 240 TP 316/316L 0.030% MAX C		PLATE	1
42	6" SCHED 80S	SA 312 TP 316/316L 0.030% MAX C		SMLS PIPE, CENTER PJM SUPPORT	2
43	6" SCHED 80S	SA 312 TP 316/316L 0.030% MAX C		SMLS PIPE, CENTER PJM SUPPORT	4
44	4" SCHED 80S	SA 312 TP 316/316L 0.030% MAX C		SMLS PIPE, CENTER PJM SUPPORT	2
45	4" SCHED 80S	SA 312 TP 316/316L 0.030% MAX C		SMLS PIPE, CENTER PJM SUPPORT	2
46	4" SCHED 80S	SA 312 TP 316/316L 0.030% MAX C		SMLS PIPE, CENTER PJM SUPPORT	4
47	1"X 6 1/4"	SA 240 TP 316/316L 0.030% MAX C		PLATE, 4" GUIDE RING SUPPORT	4
48	1"X 6 1/4"	SA 240 TP 316/316L 0.030% MAX C		PLATE, 4" GUIDE RING SUPPORT	2
49	1"X 6 1/4"	SA 240 TP 316/316L 0.030% MAX C		PLATE, 4" GUIDE RING SUPPORT	2
50	1"X 6 1/4"	SA 240 TP 316/316L 0.030% MAX C		PLATE, 4" GUIDE RING SUPPORT	2
51	1"X 2 1/2"	SA 240 TP 316/316L 0.030% MAX C		PLATE, 1" GUIDE RING SUPPORT	2
52	1"X 2 1/2"	SA 240 TP 316/316L 0.030% MAX C		PLATE, 1" GUIDE RING SUPPORT	2
53	1"X 2 1/2"	SA 240 TP 316/316L 0.030% MAX C		PLATE, 1" GUIDE RING SUPPORT	2

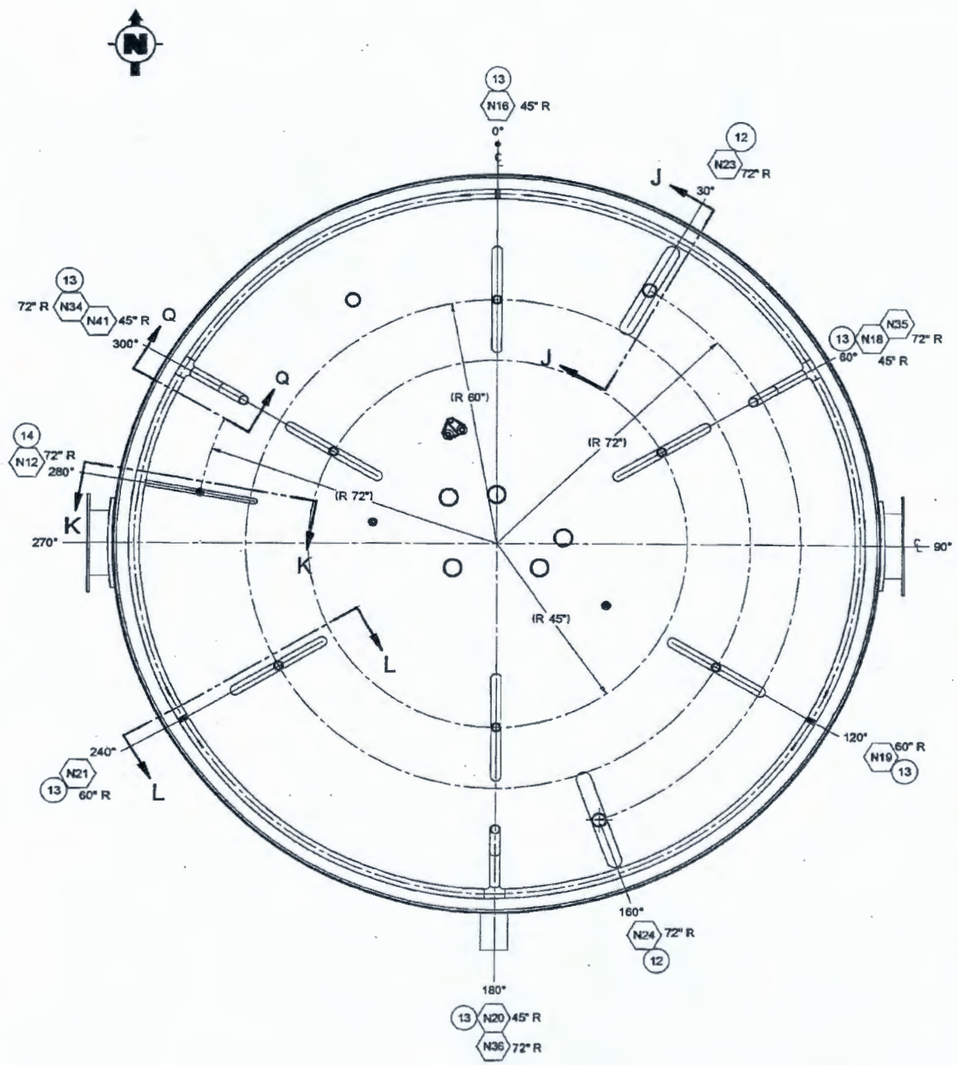

SECTION B-B
SCALE: 1/16

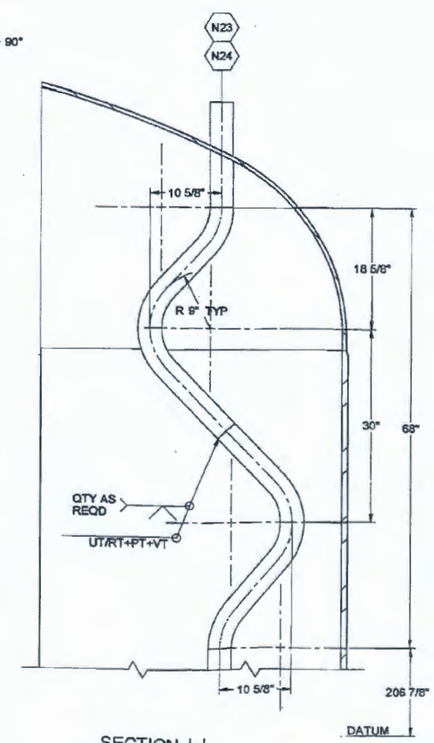

12 SECTION J-J
THERMAL EXPANSION S-BEND
SCALE: 1/10

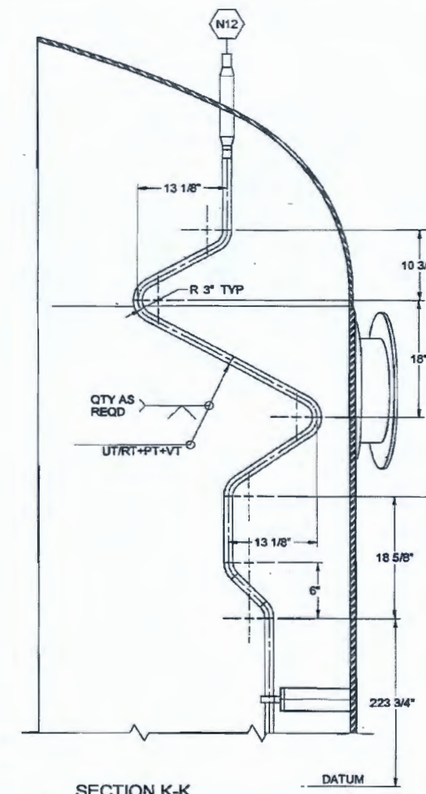

14 SECTION K-K
THERMAL EXPANSION S-BEND
SCALE: 1/10

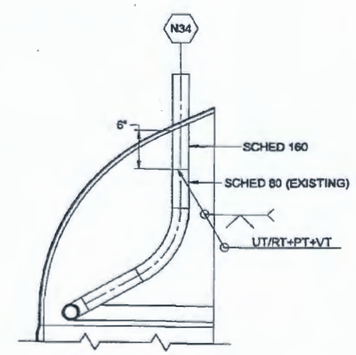

SECTION Q-Q
SCALE: 1/10

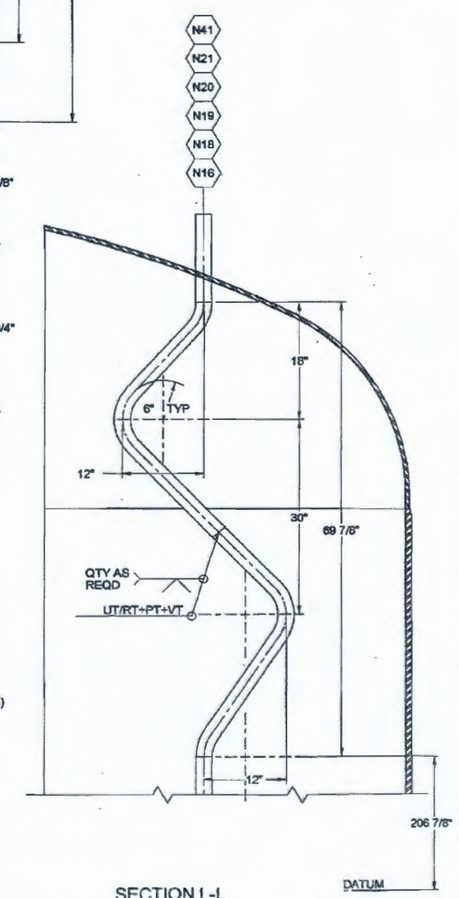

13 SECTION L-L
THERMAL EXPANSION S-BEND
SCALE: 1/10

NOTES:

1. GUIDE RINGS ARE WELDED AFTER CORRECTLY POSITIONING THE GUIDE RING SUPPORTS. GUIDE RINGS SHALL MAINTAIN .125 DIAMETRAL CLEARANCE WITH PIPE.

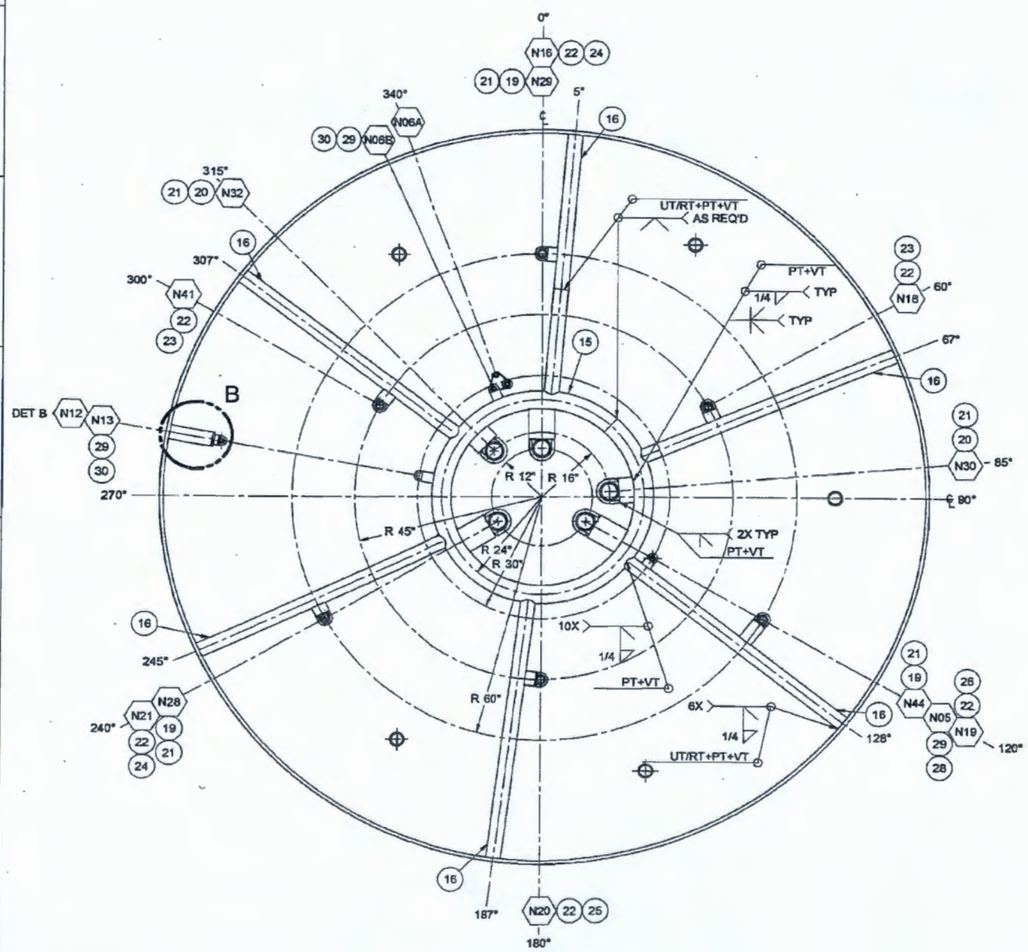

SECTION C-C
SCALE: 1/16

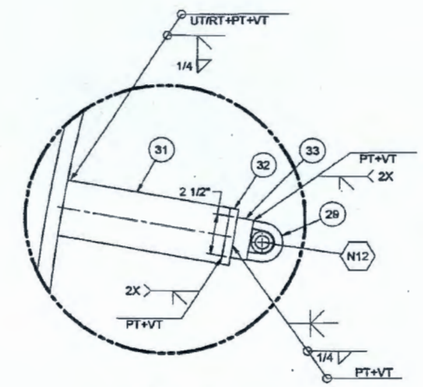

DETAIL-B
SCALE: 1/4

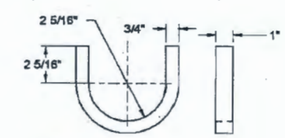

21 GUIDE RING
SCALE: 1/4

29 GUIDE RING
SCALE: 1/2

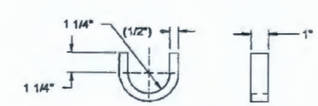

22 GUIDE RING
SCALE: 1/4

24590-PTF-VDCN-MS-10-00009

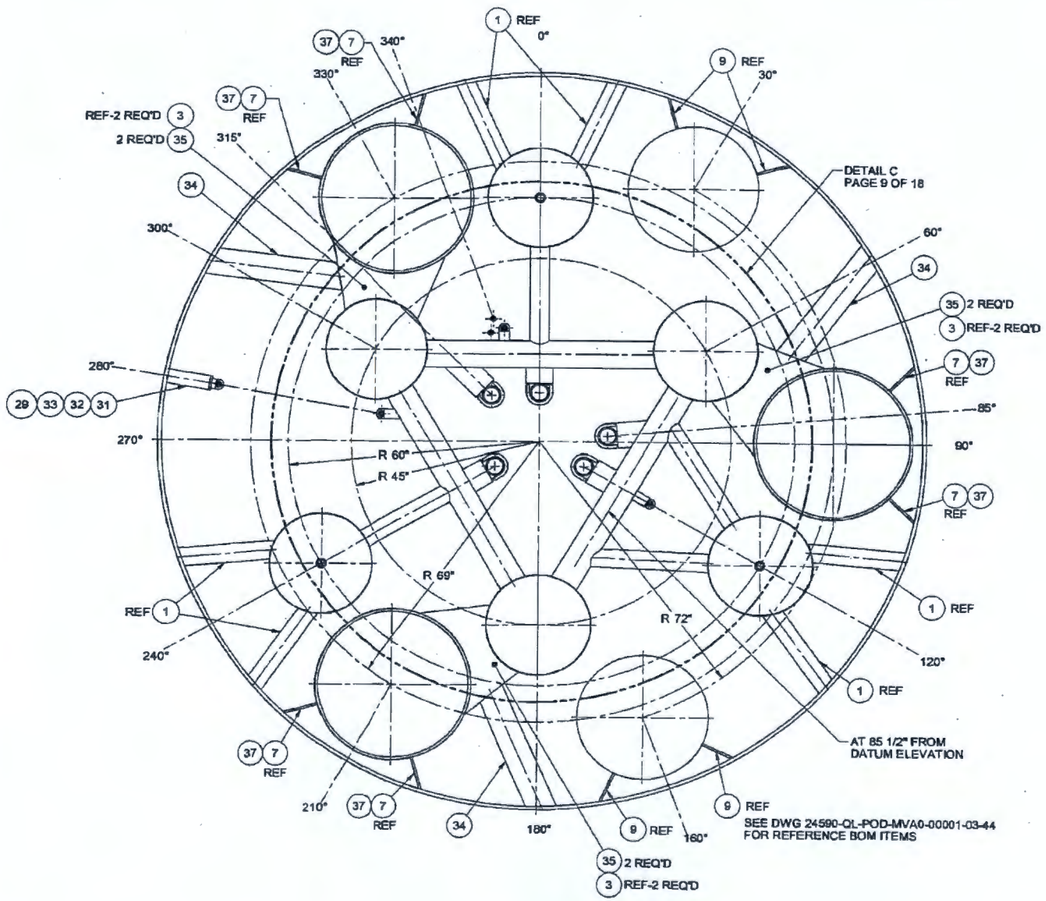

SECTION D-D
SCALE: 1/16

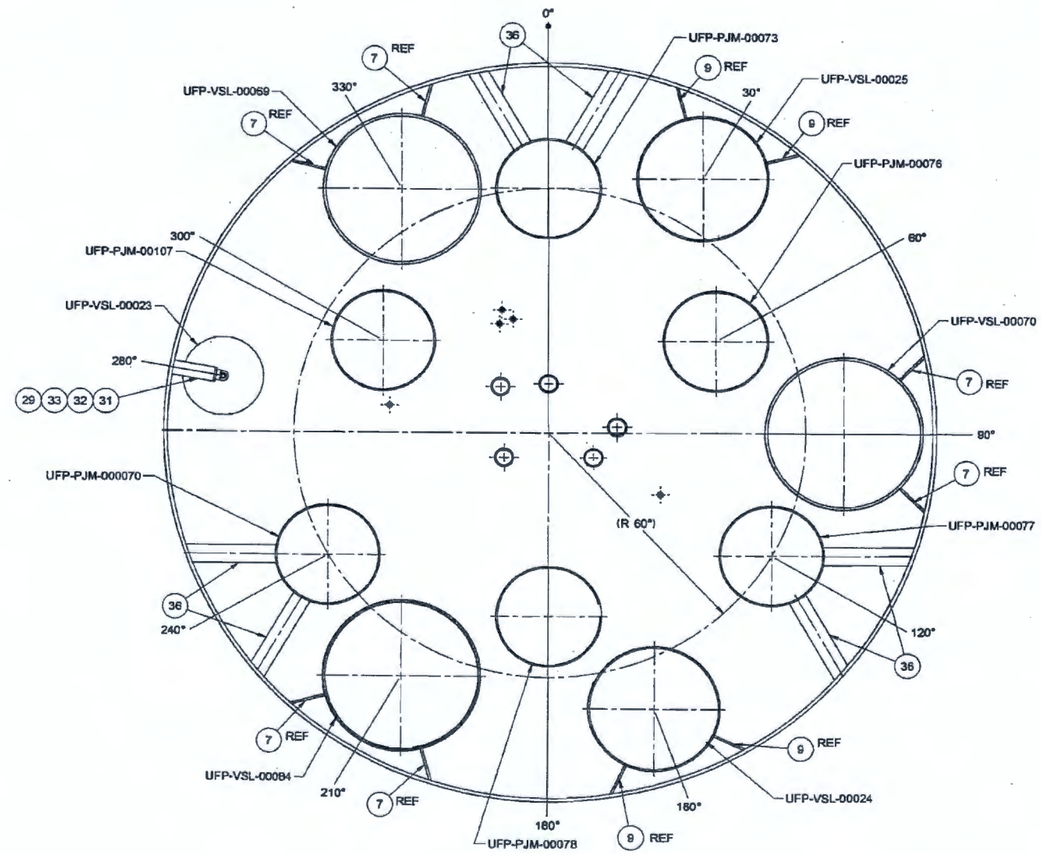

SECTION E-E
SCALE: 1/16

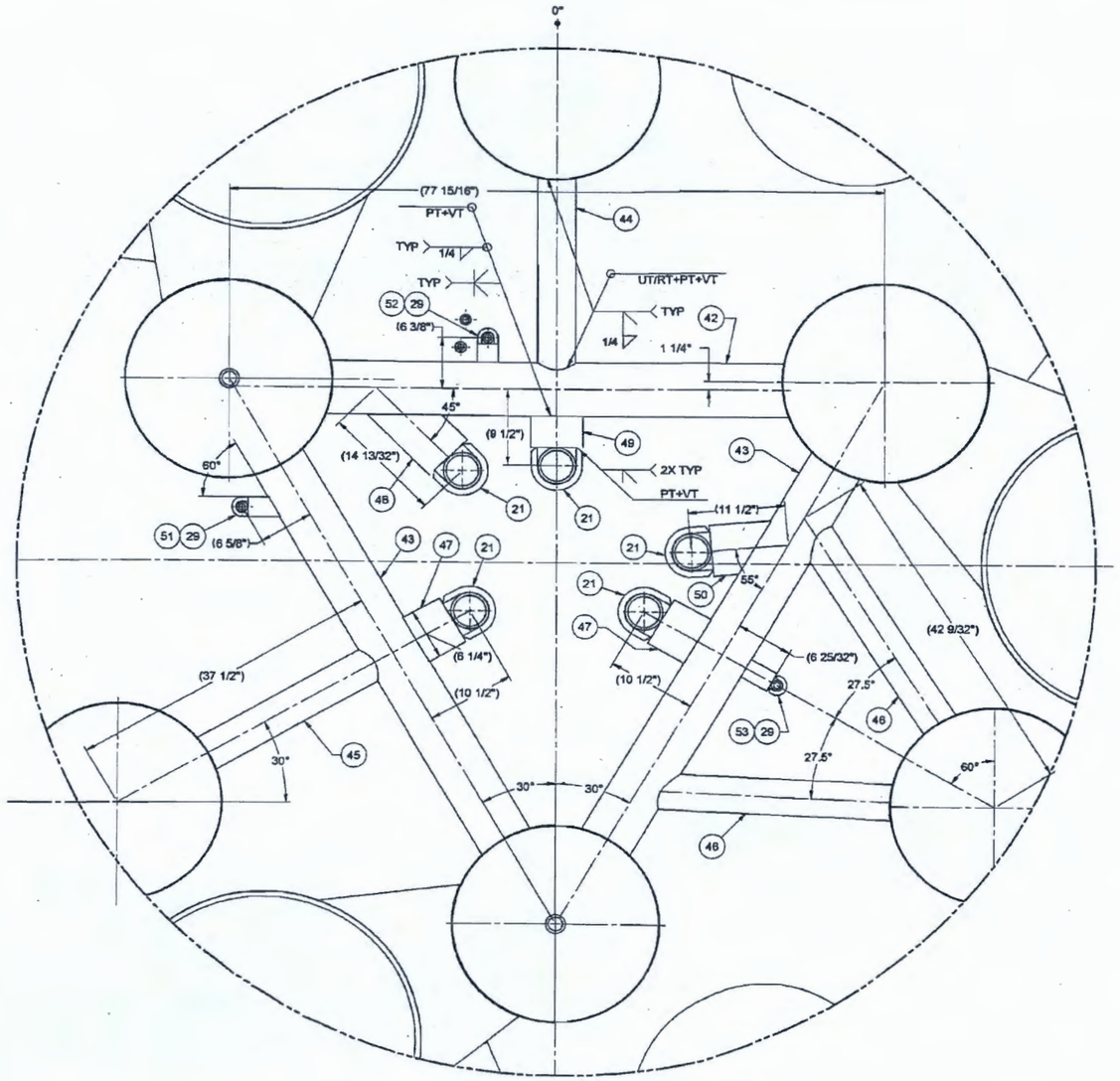

DETAIL-C
SCALE: 1/8

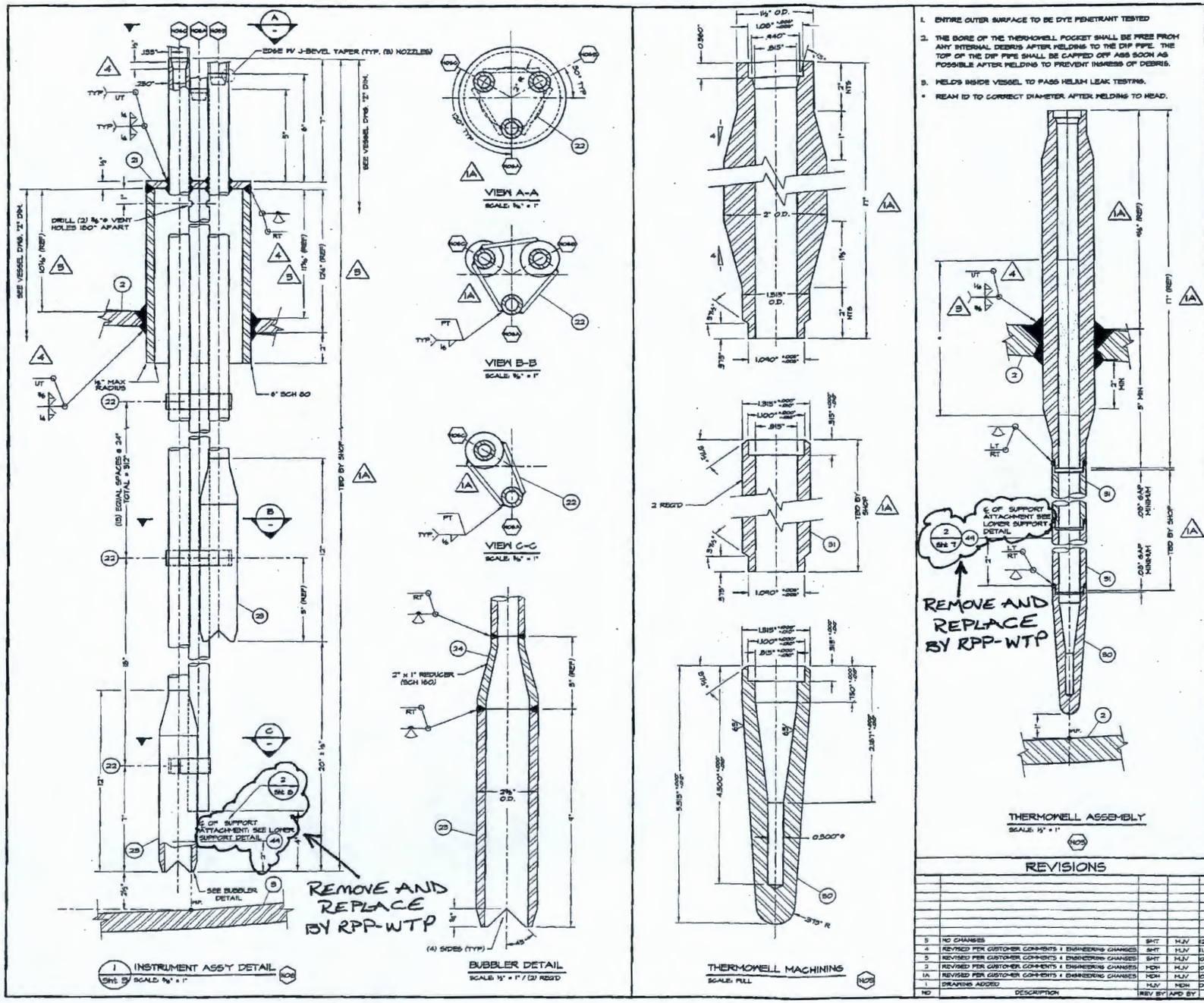

1. ENTIRE OUTER SURFACE TO BE DYE PENETRANT TESTED
2. THE BORE OF THE THERMOWELL POCKET SHALL BE FREE FROM ANY INTERNAL DEBRIS AFTER WELDING TO THE DIP PIPE. THE TOP OF THE DIP PIPE SHALL BE CAPPED OFF ASS SOON AS POSSIBLE AFTER WELDING TO PREVENT INGRESS OF DEBRIS.
3. WELDS INSIDE VESSEL TO PASS HELIUM LEAK TESTING.
4. REAM ID TO CORRECT DIAMETER AFTER WELDING TO HEAD.

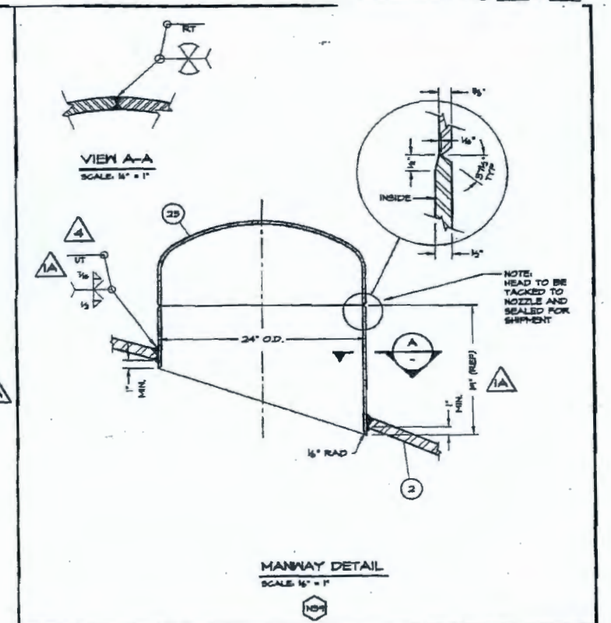

Some information on all page(s) may appear to be illegible, however, the information necessary for assuring adequate design is legible.

24590-PTF-MV-DF1-VSL-000620

REPLACE DOCUMENT STATUS

REVIEWED

1-3

REVISIONS

NO	DESCRIPTION	REV BY	APD BY	DATE
5	NO CHANGES	SHT	HJV	12/08/04
4	REVISED PER CUSTOMER COMMENTS + ENGINEERING CHANGES	SHT	HJV	11/05/04
3	REVISED PER CUSTOMER COMMENTS + ENGINEERING CHANGES	SHT	HJV	08/03/04
2	REVISED PER CUSTOMER COMMENTS + ENGINEERING CHANGES	HDH	HJV	09/03/03
1A	REVISED PER CUSTOMER COMMENTS + ENGINEERING CHANGES	HDH	HJV	07/18/03
1	DRAWING ADDED	HJV	HDH	04/28/03

NORTHWEST COPPER WORKS, INC.
1503 N. RIVER STREET • PORTLAND, OREGON • 97227

180" I.D. ULTRAFILTER PERMEATE COLLECTION VESSEL NOZZLE DETAILS (1 OF 3)

BECHTEL NATIONAL INC.
3000 George Washington Way
Richland, Washington 99352

EQUIP. NO. UFP-VSL-000620
P.O. NO. 24590-QL-POD-MVAO-00001 REV 0
SCALE AS NOTED
JOB NO. 3007
DWG. NO. D-3007
REV 5
DATE 04/28/03
CHKD. BY HJV
DWN. BY HDH
APPD. BY HDH
SHT. NO. 6 OF 8

~~REF. 24590-PTF-MV-DF1-VSL-000605 REV 0~~
BECHTEL DOC. 24590-QL-POD-MVAO-00001-03-12 REV. 00/E
DELETED BY RPP-WTP

P:\Swep\ACAD\03\D3007-5 Mon Dec 06 10:02:58 2004

Some information on all page(s) may appear to be illegible, however, the information necessary for assuring adequate design is legible.

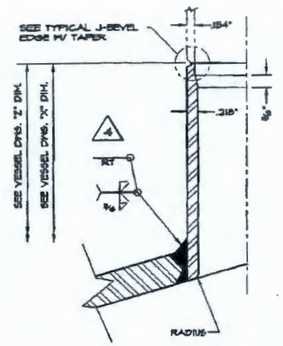

2" SCH 80 FLUSH NOZZLE
SCALE: 3/4" = 1"
N46 2

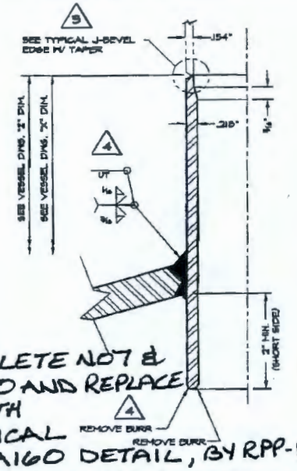

DELETE N07 & N10 AND REPLACE WITH TYPICAL SCH160 DETAIL, BY RPP-WTP

2" SCH 80 NOZZLE W/ INT. PROJECTION
SCALE: 3/4" = 1"
~~N7~~ ~~N09~~ ~~N10~~ N11 N14 2 3

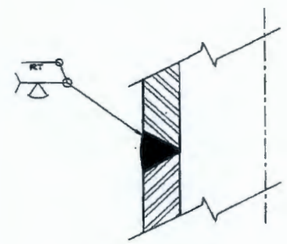

TYPICAL CIRCULAR WELD ON DIP TUBE
NO SCALE

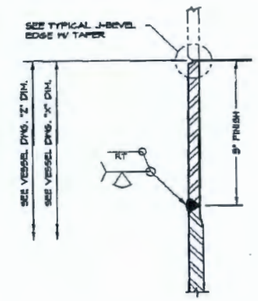

NOZZLE STUB SPLICE
SCALE: 3/4" = 1"
N48 4

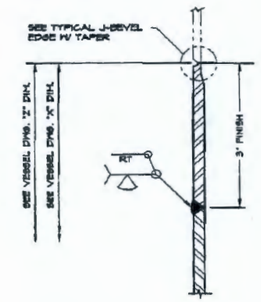

NOZZLE STUB SPLICE
SCALE: 3/4" = 1"
N50 4

REMOVE ITEM 49 FOR N05 & N06 ONLY. BY RPP-WTP

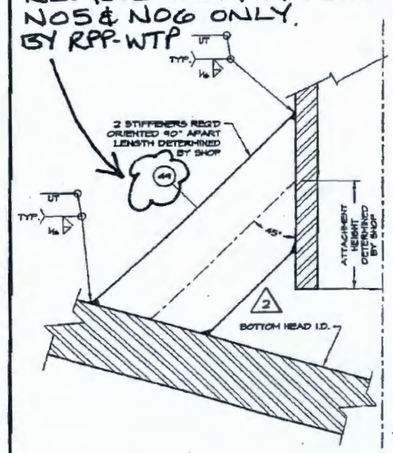

2 TYP. LOWER SUPPORT FOR DIP TUBES
NO SCALE

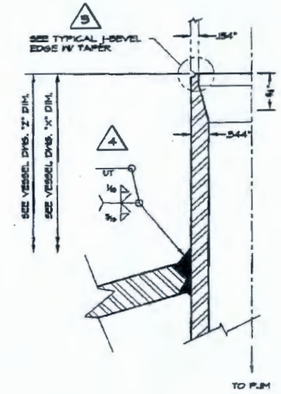

2" SCH 160 INLET TO INTERNALS
SCALE: 3/4" = 1"
N46 N15 N14 N20 N21 N41

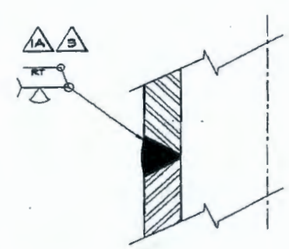

TYP. CIRC. WELD ON INLET TO INTERNALS
NO SCALE

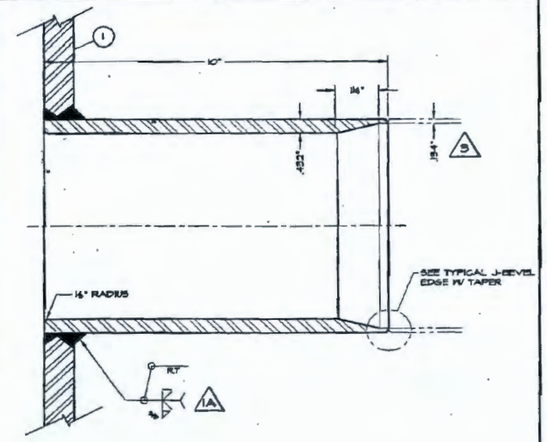

6" SCH 80 OVERFLOW NOZZLE THRU SHELL
SCALE: 1/2" = 1"
N57

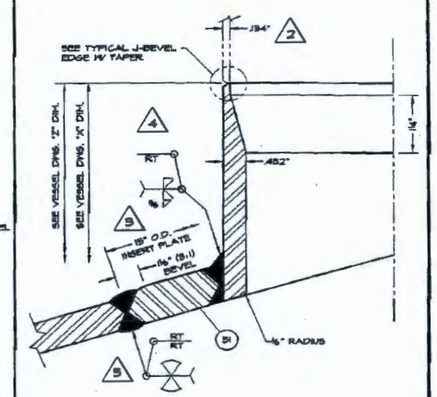

6" SCH 80 FLUSH NOZZLE
SCALE: 3/4" = 1"
N22

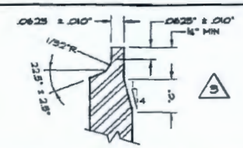

TYPICAL J-BEVEL EDGE W/ TAPER
SCALE: NONE

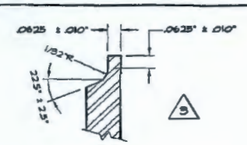

TYPICAL J-BEVEL EDGE W/O TAPER
SCALE: NONE

24590-PTF-MV-UFP-VSL-000620
Bechtel National, Inc.
SUPPLIER DOCUMENT STATUS
1. ☒ Work may proceed.
2. ☐ Revise and resubmit. Work may proceed subject to correction of indicated comments.
3. ☐ Revise and resubmit. Work may not proceed.
4. ☐ Revise not required. Work may proceed.
Permission to proceed does not constitute acceptance or approval of design details, calculations, analyses, test methods, or materials developed or selected by the supplier and does not relieve supplier from full compliance with contractual obligations.
REVIEWED By: FI / HC
G-321 Document Category 1-3
(Form Supplement A to G-321-E (G) or G-321-V (V), as applicable, or "NA" if G321 is used)
Supplemental BHI Document No. Rev.
(When applicable)
Accepted by H. KHURANA 01/13/06
Print/Type Signature Date
Released by
(When applicable) Print/Type Signature Date

REVISIONS

NO	DESCRIPTION	REV BY	APD BY	DATE
5	UPDATED NOZZLE N22 RADIOGRAPHY REQUIREMENTS	SHT	MJV	12/06/04
4	REVISED PER CUSTOMER COMMENTS & ENGINEERING CHANGES	SHT	MJV	11/09/04
3	REVISED PER CUSTOMER COMMENTS & ENGINEERING CHANGES	SHT	MJV	08/02/04
2	REVISED PER CUSTOMER COMMENTS & ENGINEERING CHANGES	MDH	MJV	09/05/03
1A	REVISED PER CUSTOMER COMMENTS & ENGINEERING CHANGES	MDH	MJV	07/16/03
1	DRAWING ADDED	MJV	MDH	04/28/03

NORTHWEST COPPER WORKS, INC.
1503 N. RIVER STREET • PORTLAND, OREGON • 97227

180" I.D. ULTRAFILTER PERMEATE COLLECTION VESSEL NOZZLE DETAILS (3 of 3)

BECHTEL NATIONAL INC.
3000 George Washington Way
Richland, Washington 99352

EQUIP. NO. UFP-VSL-000620
P.O. NO. 24590-QL-POD-MVAO-00001 REV 0

SCALE	AS NOTED	JOB NO. 3007	DWG. NO. D-3007	REV 5
DATE 04/28/03	CHKD. BY MJV			
DWN. BY MDH	APPD. BY MDH		SHT. NO. 3 OF 3	

~~REF. DWG. D-3007-FP-14-UFP-00005 REV 0~~
BECHTEL DOC. 24590-QL-POD-MVAO-00001-03-14 REV. 00 & E
DELETED BY RPP-WTP

P:\Swap\ACAD\03\D3007-5 Mon Dec 06 10:02:38 2004

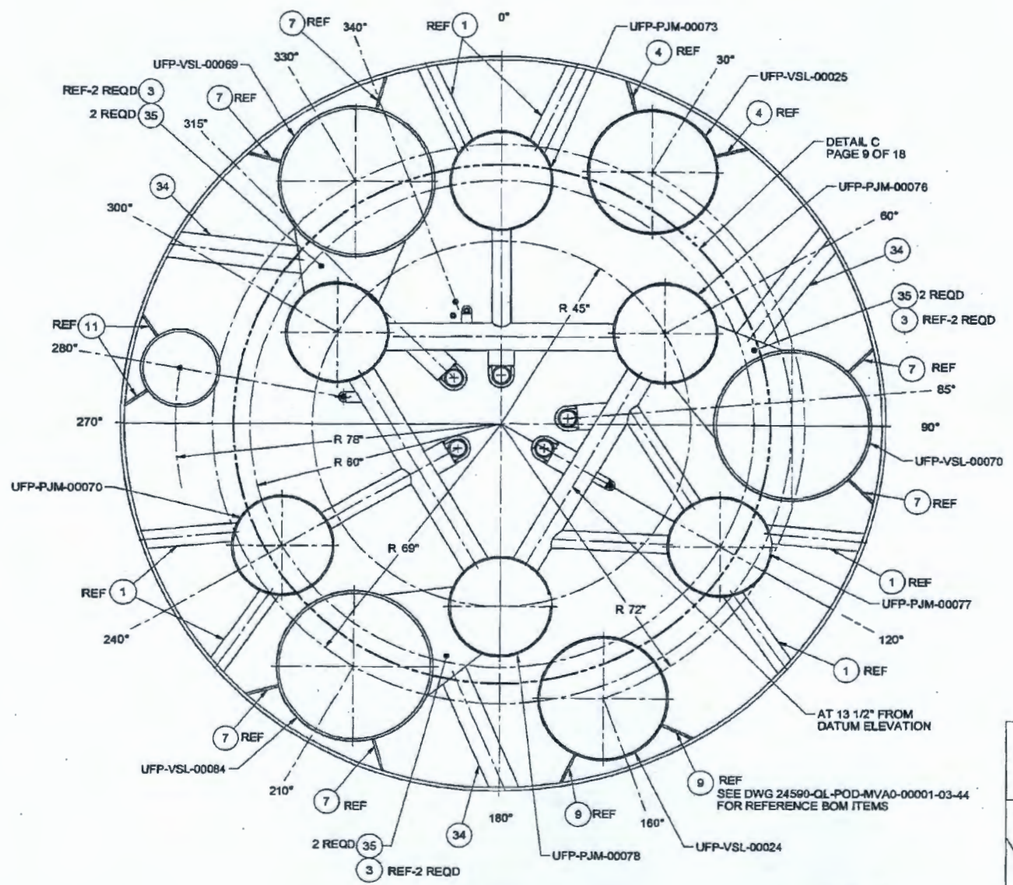

SECTION F-F
SCALE: 1/16

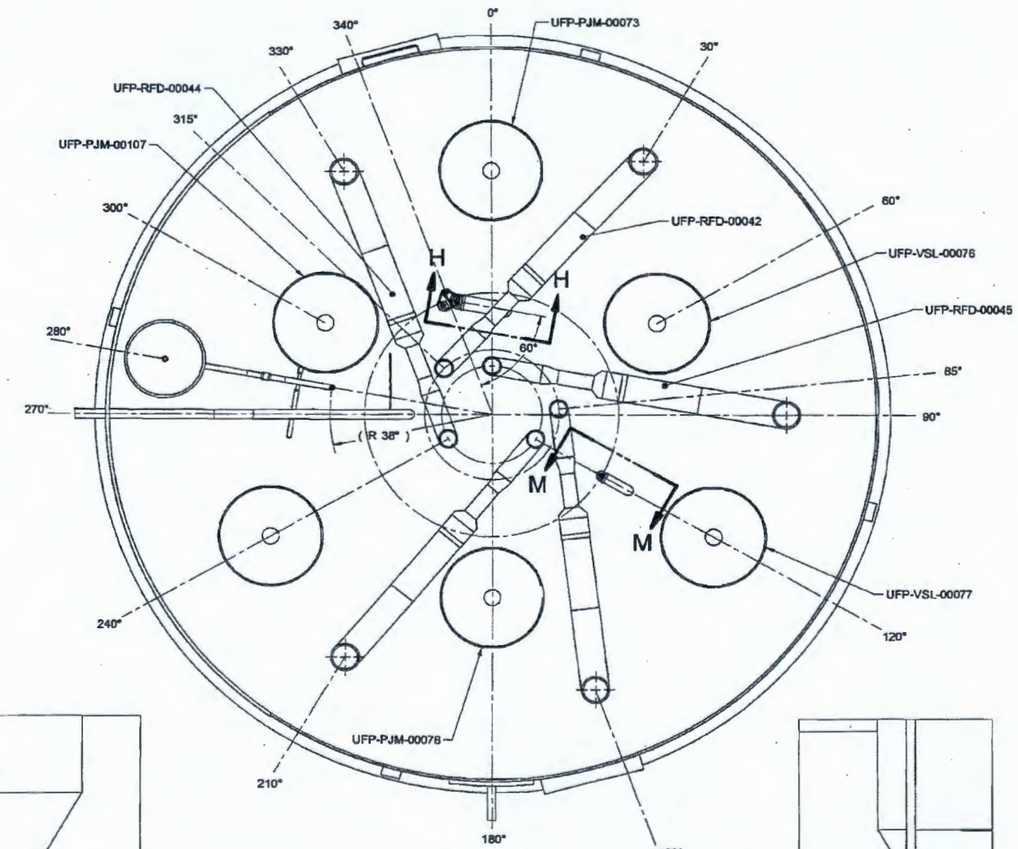

SECTION G-G
SCALE: 1/16

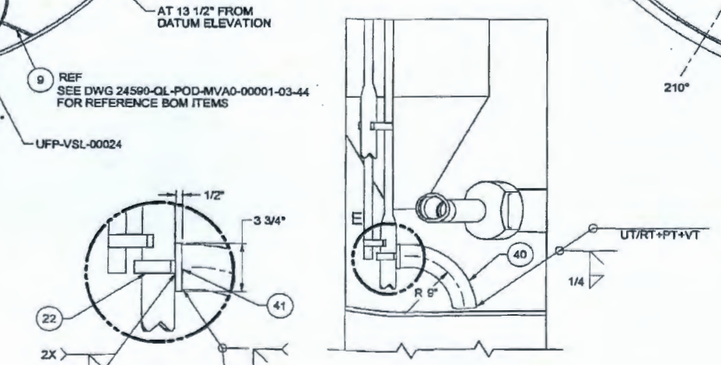

SECTION H-H
SCALE: 1/10

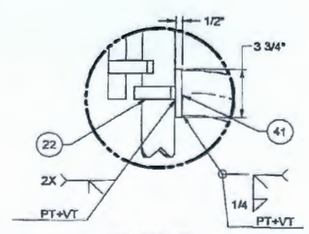

DETAIL-E
SCALE: 1/5

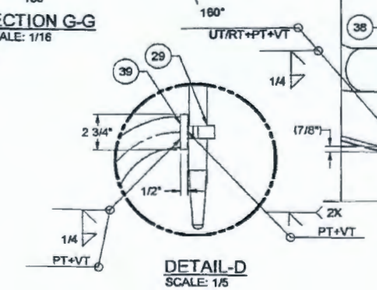

DETAIL-D
SCALE: 1/5

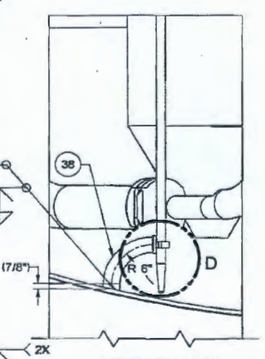

SECTION M-M
SCALE: 1/10

DELETE AND REPLACE BY RPP-WTP

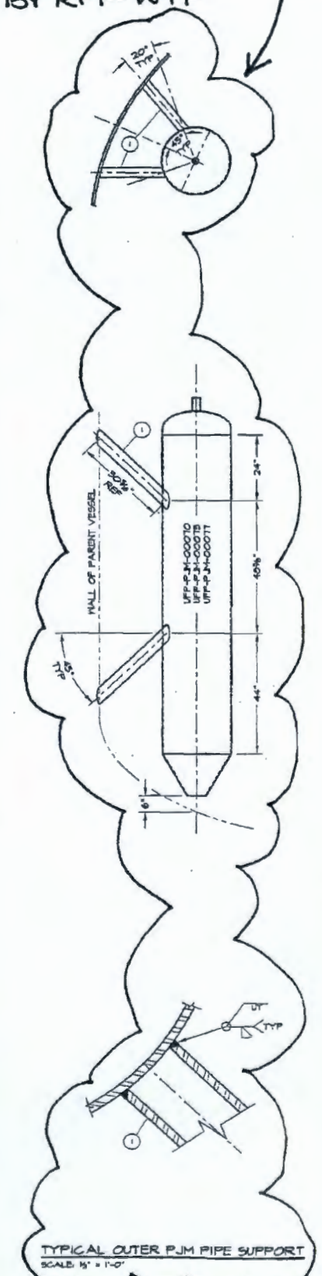

TYPICAL OUTER PJM PIPE SUPPORT
SCALE: ½" = 1'-0"

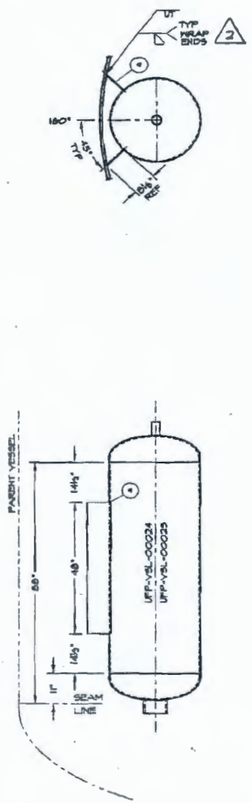

30" CHARGE VESSEL
SCALE: ½" = 1'-0"

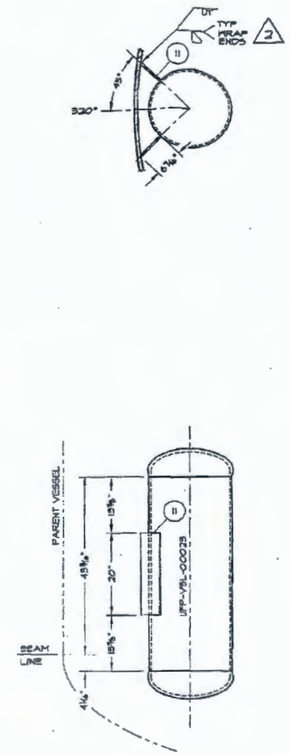

18" CHARGE VESSEL
SCALE: ⅜" = 1'-0"

DELETE AND REPLACE BY RPP-WTP

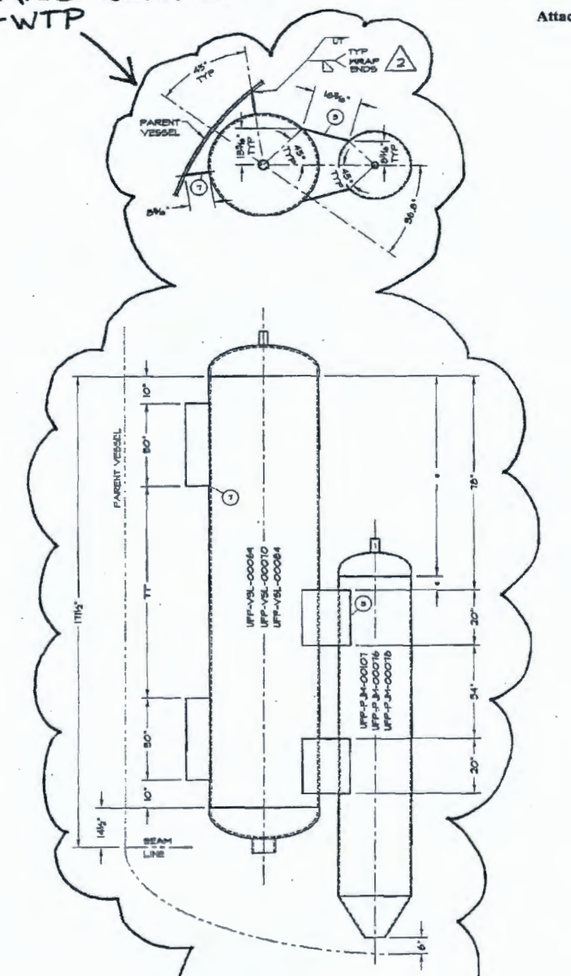

* TO BE DETERMINED BY SHOP AFTER PULSE JET MIXER LOCATED 6" ABOVE PARENT VESSEL HEAD

36" CHARGE VESSEL & INNER PJM SUPPORT
SCALE: ½" = 1'-0"

Some information on all page(s) may appear to be illegible, however, the information necessary for assuring adequate design is legible.

UFP10-PTF-M4-UFP-V5L

Bechtel National, Inc.

SUPPLIER DOCUMENT STATUS

1) No Work was approved
2) 1) Revise and resubmit. Work may proceed subject to resolution of indicated comments.
2) 2) Review was complete. Work may not proceed.
4) 1) Review was required. Work was not reviewed.

Permission to proceed does not relieve responsible organization or signatory of document of responsibility for accuracy, completeness, and/or compliance with standards, or materials developed or collected by the supplier and does not relieve supplier from full acceptance of its contractual obligations.

REVIEWED BY: MDH

G-321 Document Category: 1-3

Applicable ES&H Document No. (Where applicable): N/A

Assigned by: Hayes M 08/06/04

Reviewed by (Where applicable): Print Name / Signature / Date

REVISIONS

NO	DESCRIPTION	REV BY	APD BY	DATE
2	REVISED PER ENGINEERING CHANGES	SMT	MDH	08/06/04
1	REVISED PER CUSTOMER COMMENTS	MJV	MDH	01/13/03

NORTHWEST COPPER WORKS, INC.
1305 N. RIVER STREET • PORTLAND, OREGON • 97227

180" I.D. ULTRAFILTER PERMEATE VESSEL INTERNAL SUPPORT

BECHTEL NATIONAL INC.
3000 George Washington Way
Richland, Washington 99352

EQUIP. NO. UFP-VSL-00062C
P.O. NO. 3590-QL-POD-MV00-00001 REV 0

SCALE AS NOTED	JOB NO. 3007F	DWG. NO. D-3007F	REV 2
DATE 08/06/03	CHKD. BY MDH		
DRN. BY MDH	APPD. BY MJV	SHT. NO. 2 OF 2	

BECHTEL DOC. NO. 24590-QL-POS-MV00-00001-03-45 REV. 008

P:\Swap\ACAD\03\D3007F-2.dwg, 7/6/2004 9:05:49 AM

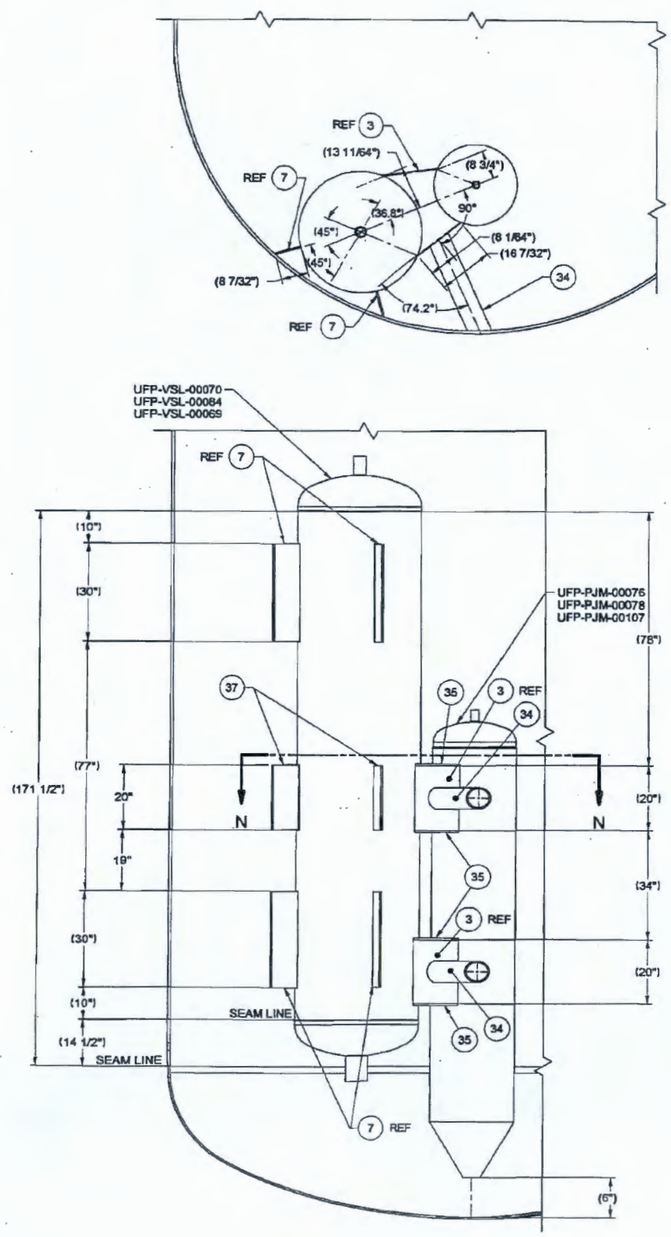

36" CHARGE VESSEL & INNER PJM SUPPORT
SCALE: 1/20
SEE DWG 24590-QL-POD-MVA0-00001-03-45
FOR REFERENCE BOM ITEMS

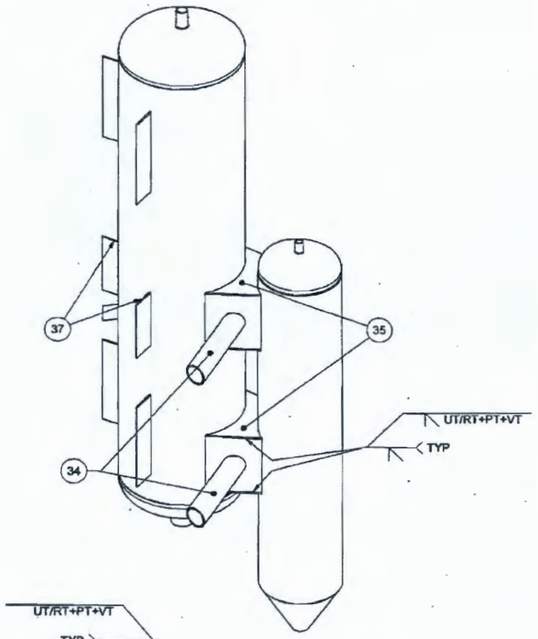

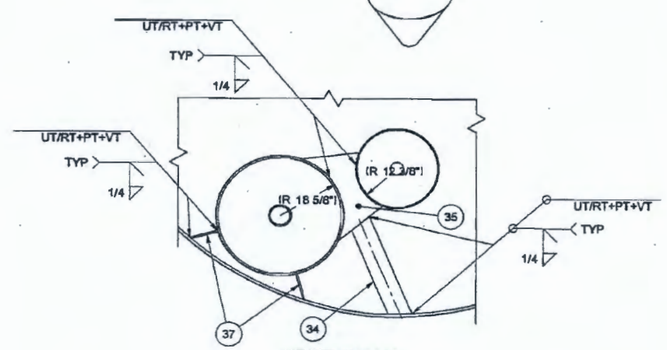

SECTION N-N
SCALE: 1/20

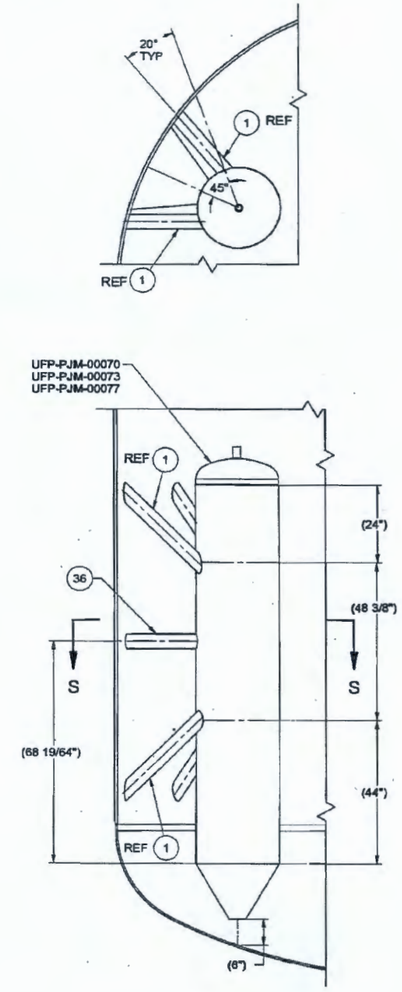

TYPICAL OUTER PJM SUPPORT
SCALE: 1/20
SEE DWG 24590-QL-POD-MVA0-00001-03-45
FOR REFERENCE BOM ITEMS

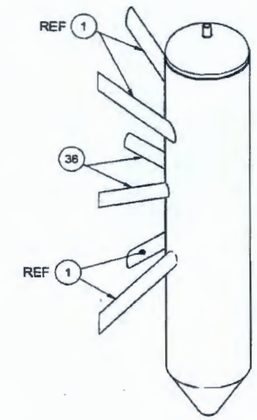

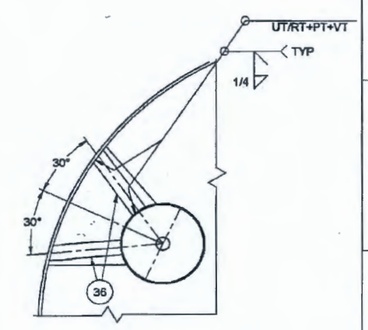

SECTION S-S
SCALE: 1/20

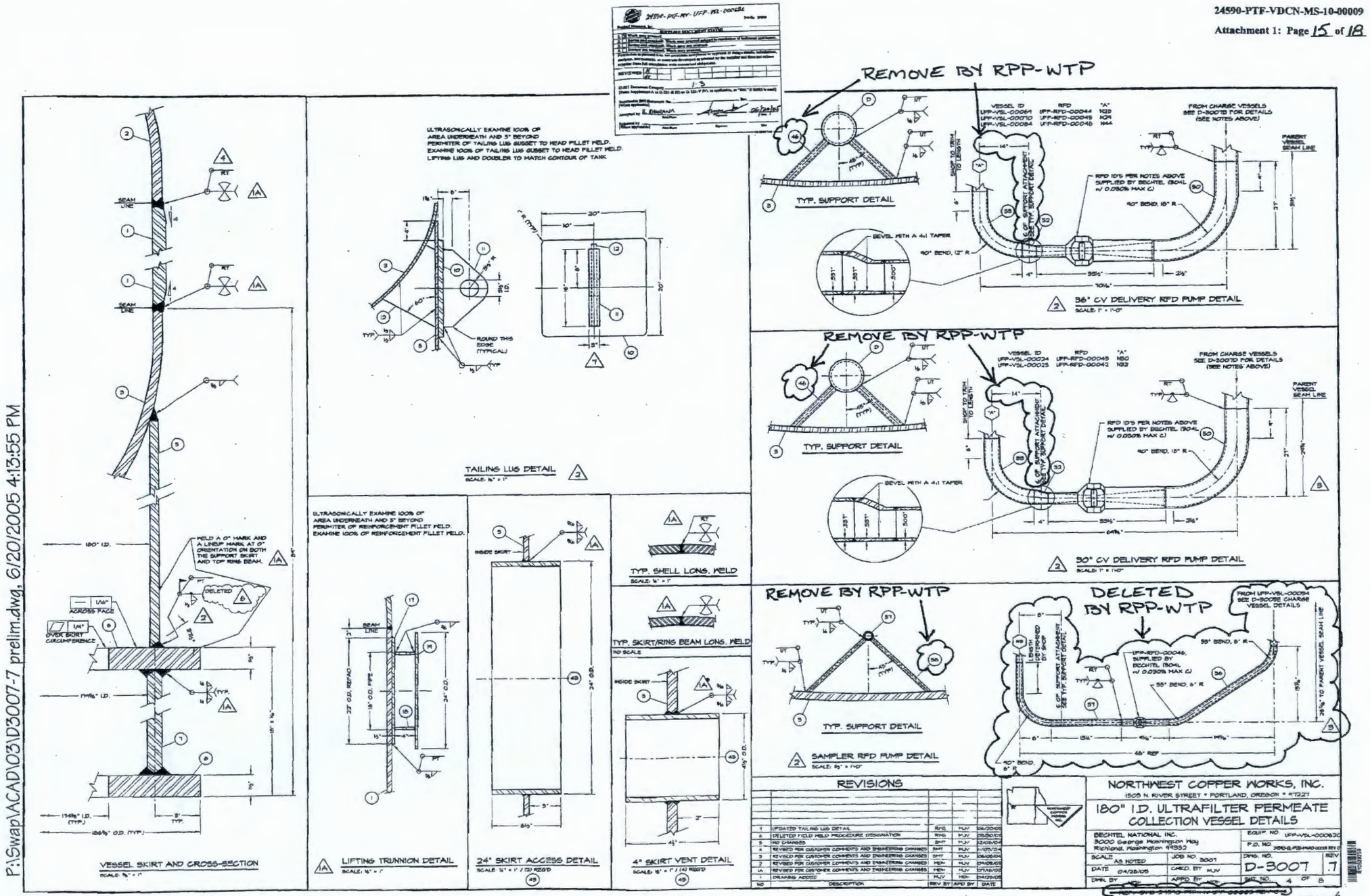

P:\Swap\ACAD\03\D3007-7 prelim.dwg, 6/20/2005 4:13:55 PM

BILL OF MATERIALS					
MK	THICK/SIZE	MATERIAL	HEAT NO.	DESCRIPTION	QTY
59	1" Ø	SA 479 TYPE 316		BAR	2
60	1" SCHED 160S	SA 312 TP 316/316L 0.030% MAX C		SMLS PIPE, OFFSET	1

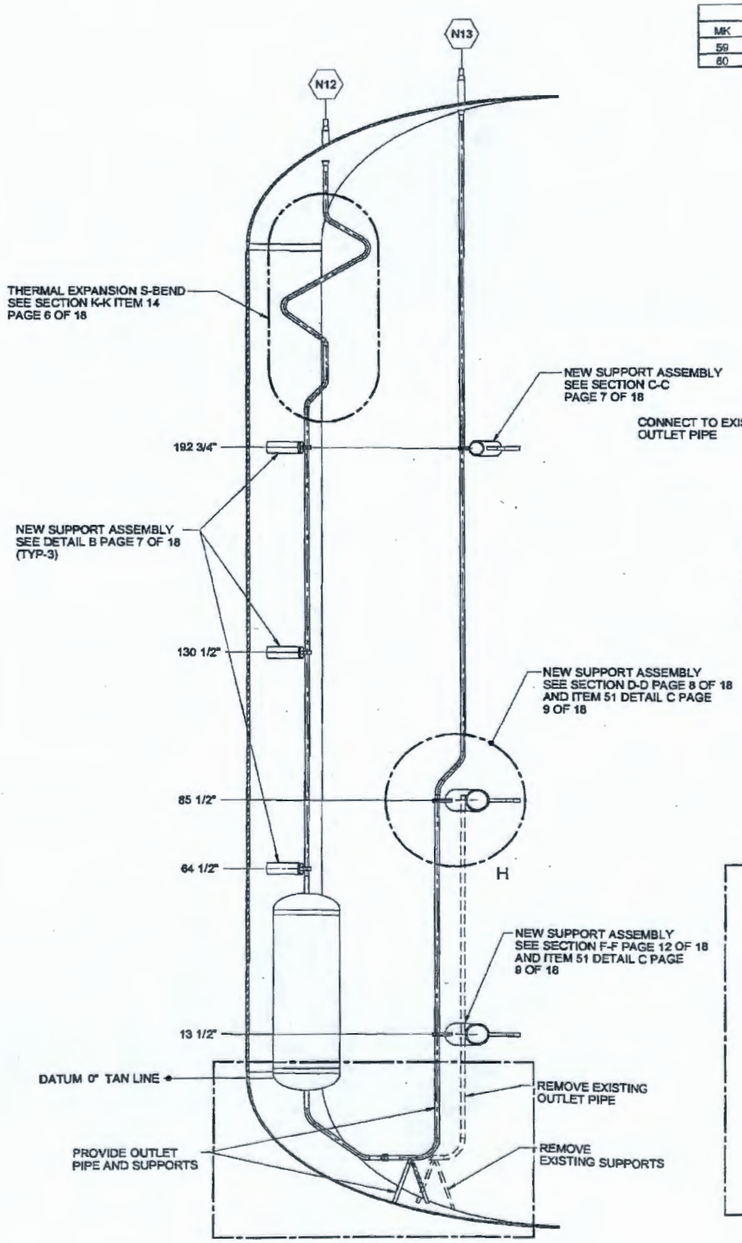

SAMPLER PUMP RFD ASSEMBLY
SCALE: 1/20
SEE DWG 24590-QL-POD-MVA0-00001-03-10
FOR REFERENCE BOM ITEMS

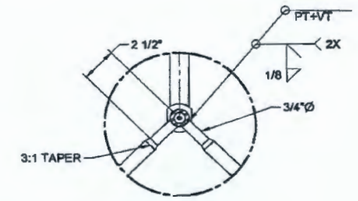

DETAIL J
SCALE: 1/5

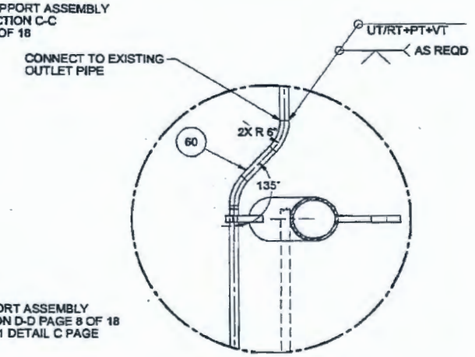

DETAIL H
SCALE: 1/10

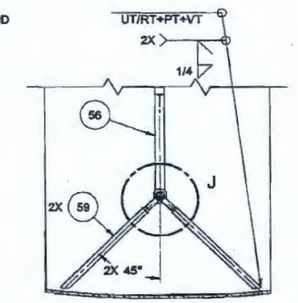

SECTION R-R
SCALE: 1/10

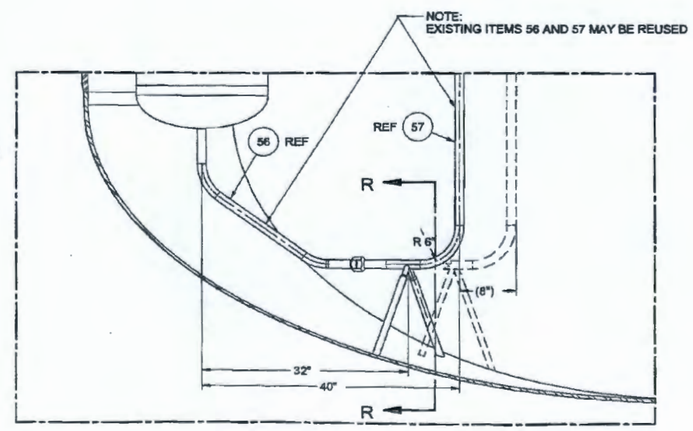

SAMPLER PUMP RFD DETAIL
SCALE: 1/10

Some information on all page(s) may appear to be illegible, however, the information necessary for assuring adequate design is legible.

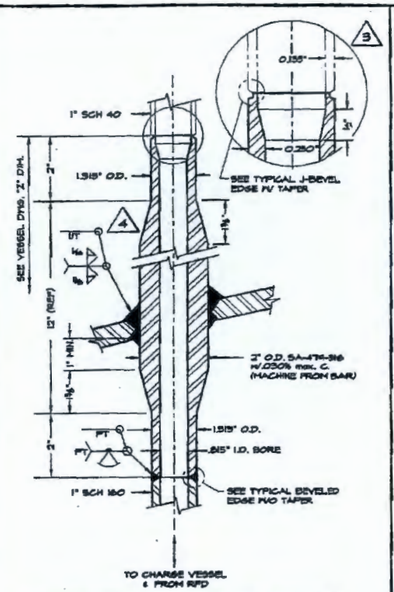

2" MACHINED BAR NOZZLE TO INTERNALS
SCALE: ½" = 1"
N12 N13 2

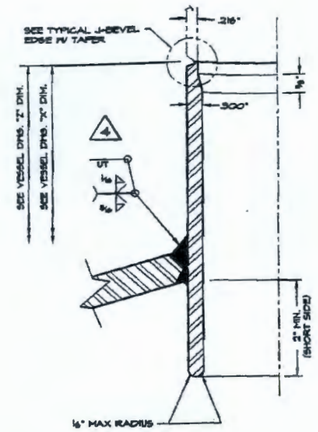

3" SCH 80 NOZZLE W/ INT. PROJECTION
SCALE: ½" = 1"
N40 2

3	NO CHANGES	SHT	HJV	12/06/04	
4	REVISED PER CUSTOMER COMMENTS & ENGINEERING CHANGES	SHT	HJV	11/05/04	
3	REVISED PER CUSTOMER COMMENTS & ENGINEERING CHANGES	SHT	HJV	08/05/04	
2	REVISED PER CUSTOMER COMMENTS & ENGINEERING CHANGES	MDH	HJV	04/05/03	
1A	REVISED PER CUSTOMER COMMENTS & ENGINEERING CHANGES	MDH	HJV	07/18/03	
1	DRAWING ADDED	HJV	MDH	04/28/03	
NO	DESCRIPTION	REV BY	APD BY	DATE	

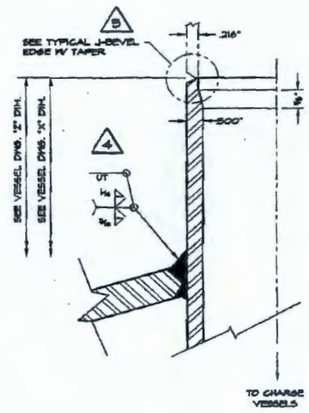

3" SCH 80 INLET TO INTERNALS
SCALE: ½" = 1"
N23 N24 N25 N26 N43

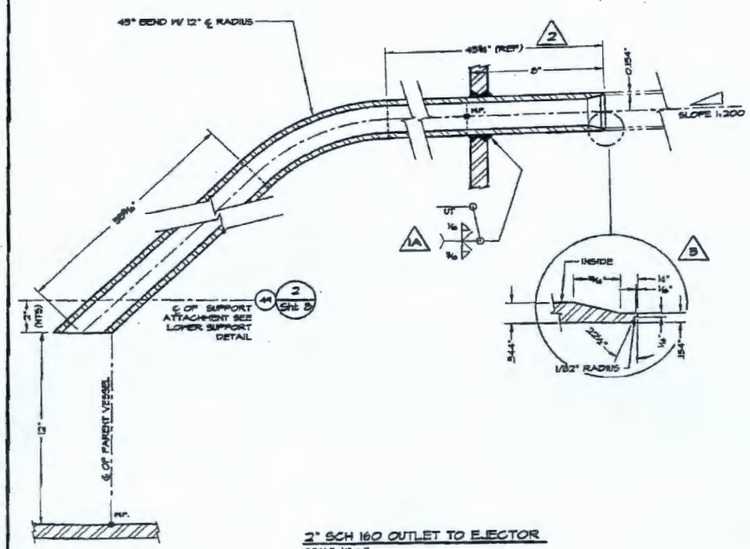

2" SCH 160 OUTLET TO EJECTOR
SCALE: ½" = 1"
N17

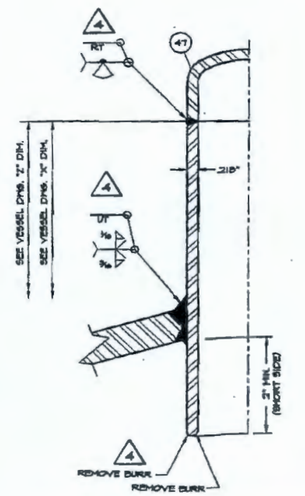

2" SCH 80 CAPPED NOZZLE W/ INT. PROJECTION
SCALE: ½" = 1"
N36 2

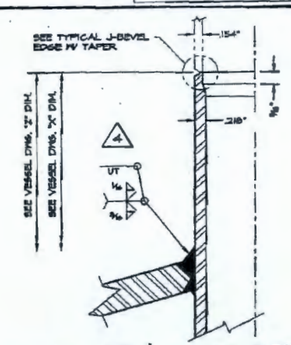

DELETE N34 AND REPLACE WITH TYPICAL SCH 160 NOZZLE DETAIL (REF SECTION Q-Q) BY RPP-WTP

2" SCH 80 INLET TO INTERNALS
SCALE: ½" = 1"
~~N34~~ N35 N36

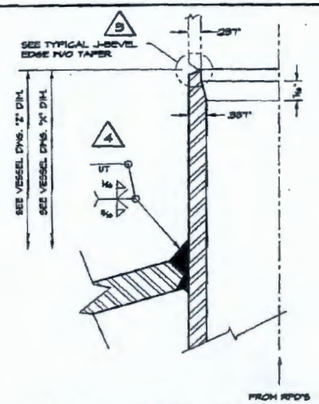

4" SCH 80 OUTLET FROM INTERNALS
SCALE: ½" = 1"
N28 N29 N30 N32 N44

R10443780

REVISIONS

NORTHWEST COPPER WORKS, INC.
1503 N. RIVER STREET • PORTLAND, OREGON • 97227

180" I.D. ULTRAFILTER PERMEATE COLLECTION VESSEL NOZZLE DETAILS (2 OF 3)

BECHTEL NATIONAL INC.
3000 George Washington Way
Richland, Washington 99352

SCALE AS NOTED	JOB NO. 3007	EQUIP. NO. UFP-VSL-000920	
DATE 04/28/03	CHKD. BY HJV	P.O. NO. 3850-QL-RDH-MAC-0008 REV 0	
DWN. BY MDH	APPD. BY MDH	DWG. NO. D-3007	REV 5
		SHT. NO. 7 OF 8	

~~REF. DWG. 24590-PTF-MV-UFP-00005-REV. C~~ and REV. 5
BECHTEL DOC. 24590-QL-POD-MVAC-00001-25-15 REV. 0015
DELETED BY RPP-WTP

P:\Swep\ACAD\03\D3007-5 Mon Dec 06 10:02:47 2004

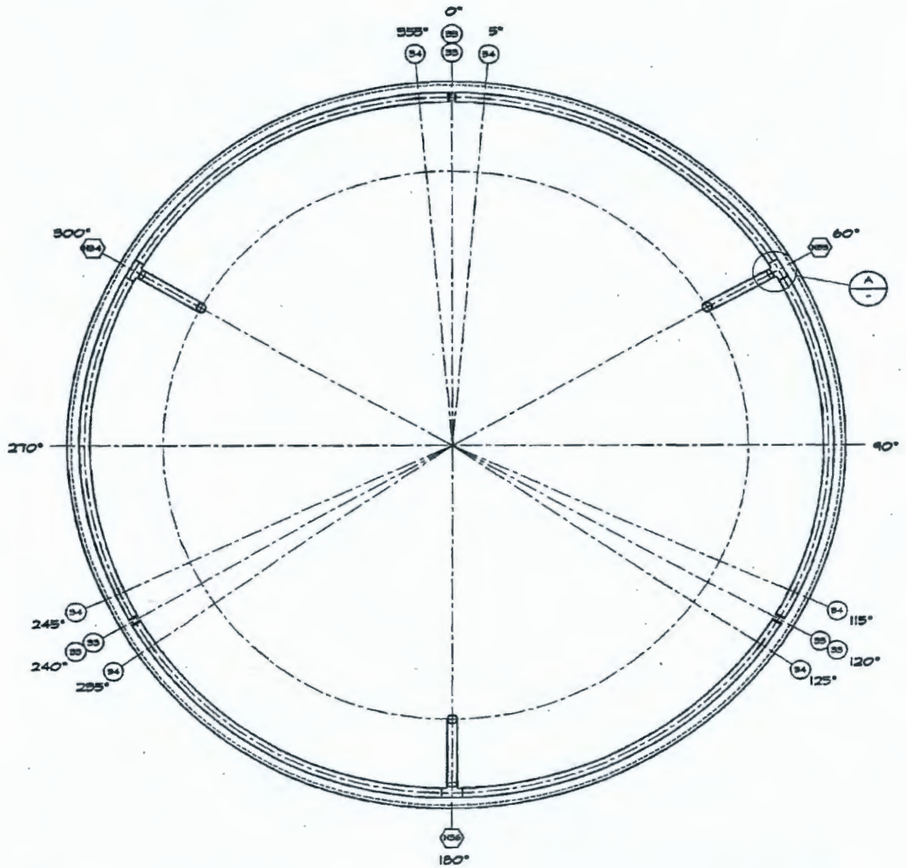

WASH RING ORIENTATION
SCALE: 3/8" = 1'-0"

Some information on all page(s) may appear to be illegible, however, the information necessary for assuring adequate design is legible.

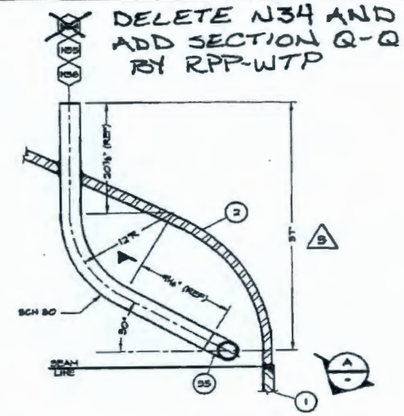

WASH RING TEE
SCALE: 1/2" = 1'

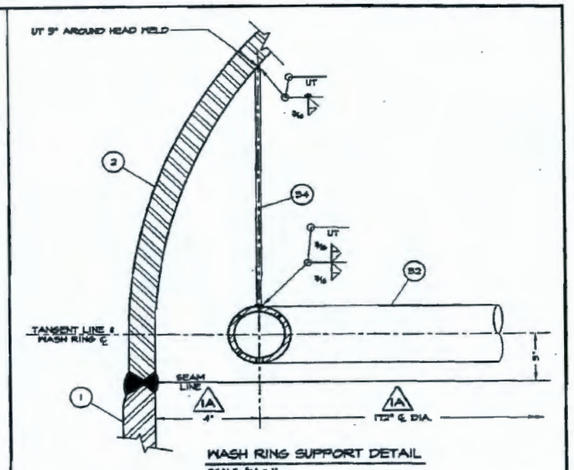

WASH RING SUPPORT DETAIL
SCALE: 3/8" = 1'

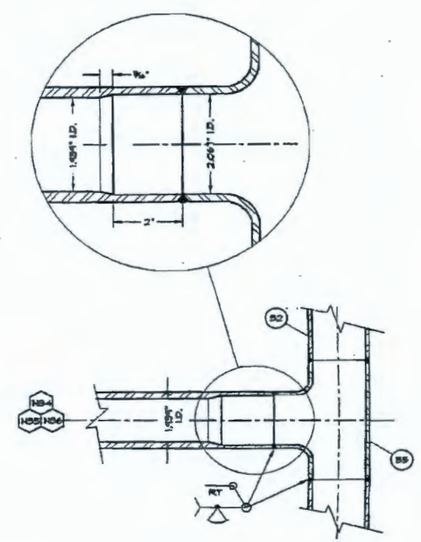

WASH RING TEE SECTION A-A
SCALE: 3/8" = 1'

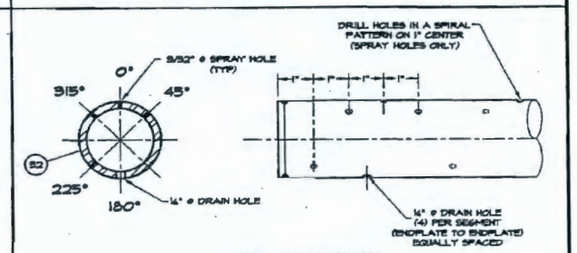

HOLE DISTRIBUTION
SCALE: 1/2" = 1'

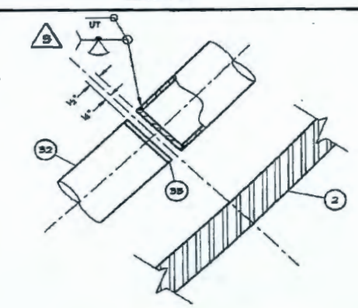

END PLATE DETAIL
SCALE: 3/8" = 1'

R10443758

REVISIONS

NO	DESCRIPTION	REV BY	APD BY	DATE
5	NO CHANGES	SHT	MJV	12/08/04
4	NO CHANGES	SHT	MJV	11/05/04
3	REVISED PER CUSTOMER COMMENTS & ENGINEERING CHANGES	SHT	MJV	06/08/04
2	REVISED PER CUSTOMER COMMENTS & ENGINEERING CHANGES	MDH	MJV	04/05/03
1A	REVISED PER CUSTOMER COMMENTS & ENGINEERING CHANGES	MDH	MJV	07/18/03
1	DRAWING ADDED	MJV	MDH	04/28/03

NORTHWEST COPPER WORKS, INC.
1303 N. RIVER STREET • PORTLAND, OREGON • 97227

180" I.D. ULTRAFILTER PERMEATE COLLECTION VESSEL WASH RING DETAILS

BECHTEL NATIONAL INC.
3000 George Washington Way
Richland, Washington 99352

SCALE AS NOTED	JOB NO. 3007	EQUIP. NO. UFP-VSL-000620	
DATE 04/28/03	CHKD. BY MJV	P.O. NO. 24590-QL-POD-HVAO-00003 REV 0	
DWN. BY MDH	APPD. BY MDH	DWG. NO. D-3007	REV 5
		SHT. NO. 5 OF 8	

~~REF. 9110-24590-PTF-MJ-UFP-00005 REV 0~~
BECHTEL DOC. 24590-QL-POD-HVAO-00001-05-11 REV. 00 IE
DELETED BY RPP-WTP

24590-PTF-MJ-UFP-VSL-000620
Bechtel National, Inc.
SUPPLIER DOCUMENT DATA
1:7
Assigned by
Released by

P:\Seep\ACAD\03\D3007-5 Mon Dec 06 10:03:08 2004

ISSUED BY
RPP-WTP PDC

R11228366

RIVER PROTECTION PROJECT – WASTE TREATMENT PLANT

ENGINEERING SPECIFICATION

FOR

ALTERATION AND REPAIR OF ON SITE STAMPED ASME CODE VESSELS AND BOILERS FOR SUBCONTRACT

Please note that source, special nuclear, and byproduct materials, as defined in the Atomic Energy Act of 1954 (AEA) are regulated at the U. S. Department of Energy (DOE) facilities exclusively by DOE acting pursuant to its AEA authority. DOE asserts that pursuant to AEA, it has sole and exclusive responsibility and authority to regulate source, special nuclear, and byproduct materials at DOE-owned nuclear facilities. Information contained herein on radionuclides is provided for process description purposes only.

Content applicable to ALARA? ☐ Yes ☒ No

ADR No. **Rev**

Specification changes retroactive? ☐ Yes ☐ No
☒ N/A (alpha revision or revision 0)

Quality Level
Q
DOE Contract No. DE-AC27-01RV14136

REV	DATE	BY	CHECK	REVIEW	E&NS	DPEM/EM
0	7/1/10	Mohan A	Steven Vail	Sean Sweeney	Merl Rosenthal	John Julyk

SPECIFICATION No.	Rev
24590-WTP-3PS-MVB2-T0002	0

Revision History

Revision	Reason for Revision
0	Issued for Use

Contents

1 Scope 1
1.1 Description and Location 1
1.2 Definitions 1
1.3 Acronyms and Abbreviations 3
1.4 Work Included 4
1.5 Conflicts 5
1.6 Responsibilities 5
1.7 Codes and Industry Standards 5
1.8 Project Documents 6
2 Materials 7
2.1 General 7
3 Rework and Alteration 8
3.1 General 8
3.2 Layout 9
3.3 Welding Requirement 9
3.4 All Design Levels 11
3.5 Additional Requirements for Design Level 1 and Q Repaired or Altered Vessels 12
3.6 Additional Requirements for Repaired or Altered Vessels Located in a Black Cell or Hard-to Reach Area 12
4 Tests and Inspections 13
4.1 Nondestructive Examinations 13
4.2 Leak Test 13
4.3 Obstruction Test 14
4.4 Final Inspection of Completed Vessel 14
5 Preparation for Service 14
5.1 Cleaning 14
6 Documentation and Submittals 14
7 Quality Assurance 15
7.1 General Requirements 15
7.2 Additional Requirements for Quality Level Q Vessels 15

Appendices

Appendix A : ..... A-i

SAMPLE-Master Inspection Checklist for Repairs and Alterations ..... A-i

1 Scope

1.1 Description and Location

The purpose of this specification is to provide criteria to implement repairs or alterations to ASME code-stamped pressure vessels and boilers that have been received and/or installed at the Hanford Tank Waste Treatment and Immobilization Plant (WTP) jobsite, but never placed in operation. This specification is intended to define technical and quality requirements for subcontractor.

In order to restore the vessel or boiler to its intended safe operating condition for the design life of the WTP Project, all repairs or alterations are required to be performed strictly as defined in this specification.

1.2 Definitions

Alterations: Any changes (physical or not) of the items described on the original manufacturer's data report (MDR) that affects the pressure containing capability of the pressure retaining item. Non-physical changes such as an increase in the maximum allowable working pressure (internal or external), increase in design temperature, or a reduction in minimum temperature of a pressure retaining item shall be considered an alteration.

Authorization: Approval/agreement to perform a specific activity (e.g., repairs, alteration). Approval or authorization shall be obtained from the Buyer prior to any work or related activity being performed.

Authorized Inspection Agency (AIA): A jurisdictional authority as defined in the National Board Constitution, or an insurance company which has been licensed or registered by the appropriate authority of state of the United States to write boiler and pressure vessel insurance in a state.

Black Cell: Shielded cells for which no maintenance or entry are planned for the 40-year design life of the plant.

Code: The term used in this specification to refer to the American Society of Mechanical Engineers Boiler and Pressure Vessel Code (ASME code) and the National Board Inspection Code (NBIC), unless otherwise referenced.

Containment: Components that contain active process fluids inside the plant process system. Refer to the mechanical data sheet (MDS) for the containment classification of components.

Design Authority: The origination having the responsibility and authority for approving the design bases, the configuration, and changes thereto.

Primary Confinement: The boundary within which the process fluids, gases, and vapors are contained and confined during the plant process operation. In this document, the entire process vessel and nozzle walls are generally referred to as the primary confinement.

Primary Containment: The part of the primary confinement that is in contact with the process fluid. This is typically the wetted portion of the vessel wall below the top of the overflow.

Auxiliary Containment: This term is used in this document to identify the portion of a primary confinement not subject to a static pressure head of liquid and that may come in contact with splashing liquid, vapor, or gases. This is typically the vessel components above the prescribed high operating liquid level.

Secondary Containment: The boundary that contains process liquid if the primary containment is breached. This boundary will not normally be in contact with the process liquid. Typically, this is the cell liner, berm, or wall structure of the facility.

Drawings: The subcontractor's drawings (subcontractor code stamps the vessel or boiler) include the vessel general outline drawing and any associated fabrication detail drawings. The Buyer's drawings are prepared to show all information necessary for repairs or alterations.

Fabrication: A general term used to describe those actions required to join parts and material to form items.

Hard-to-Reach Areas: Facility areas where piping and equipment is not designed for manual or remote access, replacement, or repair.

Installation: Those alterations and or repair actions required to set equipment into place and attach components to their supports, and to join items to form completed systems.

Inspector: Chief Inspector, State Inspector, or Special Inspector.

Chief Inspector: Washington State Chief Boiler and Pressure Vessel Inspector.

State Inspector: Washington State Boiler and Pressure Vessel Inspector.

Special Inspector: Inspector holding a valid commission issued by the National Board and employed by an accredited in-service Authorized Inspection Agency (AIA) - an insurance company authorized to write boiler and pressure vessel insurance in Washington State.

Items: A broad term for components, parts, and piping subassemblies which provide a pressure retaining barrier or act as a pressure retaining member. Items are normally manufactured or fabricated, are inspected by an authorized inspector, and require an MDR.

Jurisdiction: State of Washington has adopted the ASME code and maintains a duly constituted division for the purpose of enforcement of such code.

Material: Metallic materials that are manufactured to ASME Section II requirements or to specification permitted by ASME Section I and VIII, Division 1.

Mechanical Data Sheet: The Buyer's mechanical data sheet.

Monitor: To watch over, observe, or examine a work operation. Results of the observations and examinations may be recorded; however, sign-off responsibility is not included.

Nonconformance: For code items, a deficiency in characteristic, documentation, or procedure that renders the quality of an item or activity unacceptable or indeterminate, or does not meet the requirements of the code.

Owner or User: DOE, Hanford, or the assigned agent legally responsible for the safe operation of any pressure retaining item (e.g., Stamped ASME Vessel) within the WTP jobsite.

Part: An item subject to internal or external pressure, that is fabricated by welding, and which requires inspection by authorized inspector. A part shall be fabricated by a manufacturer having an ASME Certificate of Authorization and the appropriate code symbol stamp. A completed manufacturer's partial data report shall be supplied by the manufacturer.

Pressure Retaining Item (PRI): Any boiler, pressure vessel, piping, or material used for the containment of pressure, either internal or external. The pressure may be obtained from an external source, or by the application of heat from a direct source, or any combination thereof.

Quality Level: Establishes the quality assurance program requirements. Formerly, quality level also determined allowable nozzle reinforcement methods and nondestructive examination (NDE) requirements. Refer to the design level for these requirements. Buyer assigns quality levels on the MDS or drawings.

Repair: The work necessary to restore a pressure retaining item to a safe and satisfactory operating condition provided there is no deviation from the original design.

"R" Symbol Stamp: Symbol stamp for the National Board Inspection Code (NBIC) authorization program for the repair and/or alteration of boilers, pressure vessels, and other pressure-retaining items.

1.3 Acronyms and Abbreviations

AI	Authorized Inspector
AIA	Authorized Inspection Agency
ASME	American Society of Mechanical Engineers
Buyer (BNI)	Bechtel National Inc.
HPAV	hydrogen in piping and ancillary vessels
MDR	manufacturer's data report
MDS	mechanical data sheet
MOB	multiple overblow
MT	magnetic particle examination
NBIC	National Board Inspection Code
NDE	nondestructive examination
PRI	pressure retaining item
PQR	procedure qualification record

PT	dye-penetrant
PWHT	post weld heat treatment
RGM	revised ground motion
RT	radiographic examination
UT	ultrasonic examination
WAC	Washington Administrative Code
WPS	welding procedure specification
WSGM	WTP site-specific ground motion

1.4 Work Included

The NBIC "R" certificate holder (subcontractor) is responsible for furnishing all materials and labor needed to repair or alter, test, and prepare the pressure vessels or boiler for the intended service in accordance with this specification and the repair package.

Alterations/repairs are made to ASME Section VIII, Division 1 stamped pressure vessels (or Section I stamped boilers) which are currently installed, but never placed in operation at the jobsite.

Typical repairs include adding internal attachments and reinforcement (i.e., integral or non-integral) to the vessel pressure boundary and to internal components (e.g., pulse jet mixers, charge vessel, internal pipes). Other possible repairs include adding stiffeners on the vessel shell between cooling jackets, weld build-up, or replacement of wear plates, cutting and re-welding the vessel access door, and removal of previously installed internal supports.

Typical alterations include vessel re-rating (i.e., increase in maximum allowable working temperature or temperature of a pressure retaining item), adding new attachments to the vessel heads or shell, and/or adding new nozzles that are larger than what was on the original code calculation; in such cases, reinforcement and nozzle strength calculations are required.

All alterations or repairs of pressure retaining items shall comply with the NBIC Part 3, *Repair and Alterations of Pressure-Retaining Items*.

The subcontractor shall obtain appropriate approvals for vessel repairs or alterations from the Washington State Department of Ecology (jurisdictional authority) for the location where the equipment to be repaired resides.

Prior to performing any alterations or repairs, the subcontractor shall prepare a field traveler in accordance with appendix A to present Buyer's review. The subcontractor shall prepare a submittal package for registering the completed modification/repair with the NBIC, and for obtaining a vessel "R" stamp.

The subcontractor shall define the scope of required rework and must give a detailed description of the required repairs/alterations for each reworked vessel. A procedure shall be developed to fully define in accordance with exhibit F in subcontract for all rework and authorized inspector (AI) and the Buyer must review and concur prior to initiating any repair/alteration work. The procedure must include all welding

specification procedures (WPSs), supporting procedure qualifications records (PQRs), and nondestructive examination procedures, and leak test procedures.

For all alterations or repairs, a meeting shall be held, unless specifically excluded by the Buyer, to include the Buyer, the authorized inspector, and other necessary parties to resolve all issues and to gain a clear understanding of the rework as directed on the Buyer's drawings and documents.

Subcontractors, and Bechtel construction personnel, including field engineers, do not have authority to change or waive any of the technical or quality requirements established by Bechtel engineering organization with design authority, without the proper documented approval of that engineering organization.

1.5 Conflicts

In cases where a conflict exists between this specification and other drawings or specifications, the subcontractor shall call attention to the conflict and request an interpretation in writing from the Buyer.

1.6 Responsibilities

The Buyer (BNI) will provide code manufacturer's data report(s), as-built shop drawings for stamped vessel, vessel internal drawings, and new support drawings with the bill of materials and applicable documents. The subcontractor is responsible for ensuring that the correct design documents are used for the performance and integrity of the work.

The subcontractor is responsible for making the detail fabrication drawings and performing all code calculations, but BNI reserves the right to perform the design work, including drawing and calculations, needed for the repair or alteration of each vessel.

1.7 Codes and Industry Standards

1.7.1 The subcontractor shall apply the year, and addenda, on the ASME Code data report for alteration and repair, as applicable for the following codes and industry standards. Use of any other edition, revision, or issue requires Buyer approval.

1.7.2 ASME Section VIII, Division 1, *Rules for Construction of Pressure Vessels,* American Society of Mechanical Engineers.

1.7.3 ASME Section II, *Materials,* American Society of Mechanical Engineers.

1.7.4 ASME Section V, *Nondestructive Examination,* American Society of Mechanical Engineers.

1.7.5 ASME Section VIII, Division 1, *Appendix 12,* Ultrasonic Examination of Welds (UT).

1.7.6 NBIC, Part 3 with latest addenda, *National Board Inspection Code*, National Board of Boiler and Pressure Vessel Inspectors Repair and Alterations.

1.7.7 PFI Standard ES-24. *Pipe Bending Methods, Tolerances, Process and Mechanical Requirements*, Pipe Fabrication Institute, Engineering and Fabrication Standard.

1.7.8 ASNT SNT-TC-1A, *Recommended Practice No. SNT-TC-1A, American Society for Nondestructive Testing, Inc. June 1980 Edition through 2001 Edition and its applicable supplements.*

1.7.9 ASME. NQA-1 2000. *Quality Assurance Program Requirements for Nuclear Facilities.*

1.7.10 ASME, SA-240/SA-240M. *Specification for Chromium and Chromium- Nickel Stainless Steel Plate, Sheet, and Strip for Pressure Vessels and for General Applications.*

1.7.11 State of Washington Boiler & Unfired Pressure Vessel RCW laws & Washington Administrative Code (WAC) rules: *Chapter 70.79 RCW & 296-104 WAC*

1.7.12 OSHA, Occupational Safety, and Health Administration (OSHA) Permit-required confined spaces, *per 29 CFR 1910.146.*

1.7.13 ASTM Hardness Standard Testing, *E18 Standard Test Method for Rockwell Hardness of Metallic Materials.*

1.7.14 ASTM A578/A578M. *Standard Specification for Straight-Beam Ultrasonic Examination of Rolled Steel Plates for Special Applications*

1.8 Project Documents

1.8.1 24590-WTP-3PS-G000-T0010, *Engineering Specification for Positive Material Identification (PMI) for Construction.*

1.8.2 24590-WTP-MV-M59T-00001, *Pressure Vessel Tolerances Standard Details.*

1.8.3 24590-WTP-3PS-MVB2-T0001, *Engineering Specification for Welding of Pressure Vessels, Heat Exchangers, and Boilers.*

1.8.4 24590-WTP-3PS-G000-T0001, *Engineering Specification for Supplier Quality Assurance Program Requirements.*

1.8.5 24590-WTP-3PS-G000-T0003, *Engineering Specification for Packing, Handling and Storage Requirements.*

1.8.6 24590-WTP-3PS-G000-T0005, *Engineering Specification for Cleanness Requirements for WTP Fluid Systems.*

1.8.7 24590-WTP-3PS-NW00-T0002, *Engineering Specification for Chemical Requirements for Materials Used in Contact With Austenitic Stainless Steel and Nickel Based Alloys.*

1.8.8 24590-WTP-LIST-CON-08-0001, *Restricted Materials List WTP Safety Assurance.*

1.8.9 24590-WTP-3PS-PS02-T0002, *Engineering Specification for Cold Bending of Pipe.*

2 Materials

2.1 General

2.1.1 Materials shall be new and free from defects. All materials shall be in accordance with ASME Section VIII, Division 1. The Seller shall furnish legible copies of the mill test reports from the manufacturer for base and filler materials comprising the primary confinement, supports, and welded attachments. Other materials shall be provided with certified statements that the material meets the requirements of the applicable material specification in ASME Section II.

2.1.2 Material shall be furnished to the specification and grade shown on the BNI drawings and the Mechanical Data Sheet (MDS). The subcontractor shall not substitute materials without written approval from the Buyer.

2.1.3 Certain materials are restricted on the WTP project due to their health risks and regulatory requirements. These materials are listed in 24590-WTP-LIST-CON-08-0001, *Restricted Materials List WTP Safety Assurance*. No substance on this list is allowed on the WTP Project without specific authorization from the Buyer (Safety Assurance).

2.1.4 Contact materials, including marking materials, temperature indicating crayons, adhesive backed and pressure sensitive tape, and barrier and wrap materials may be used only under the following limits as defined on 24590-WTP-3PS-NW00-T0002, *Engineering Specification for Chemical Requirements for Materials Used in Contact With Austenitic Stainless Steel and Nickel Based Alloys*.

2.1.5 Anti-spatter compounds used in welding, shall not be compounded of or have as intentional additions the following elements: chlorine, fluorine, sulfur, mercury, lead, tin, bismuth, antimony, zinc and cadmium.

2.1.6 Materials and residue shall be completely removed when no longer required. Cleaning materials may be non-halogenated solvents or potable water that meet the requirements in 24590-WTP-3PS-NW00-T0002, *Engineering Specification for Chemical Requirements for Materials Used in Contact With Austenitic Stainless Steel and Nickel Based Alloys.*

2.1.7 Subcontractor shall submit a material traceability procedure for BNI review and acceptance. In addition, all new materials used in the rework of each vessel shall have positive material identification performed per 24590-WTP-3PS-G000-T0010, *Engineering Specification for Positive Material Identification (PMI) for Construction.*

2.1.8 All pipes and any fittings shall be seamless.

2.1.9 Internal support and piping systems shall comply with the ASME Section VIII, Division 1 parent vessel requirements for material, fabrication, examination, and testing. Pipe fittings also comply with the appropriate ASME standards for materials and dimensions unless otherwise stated in the purchase order.

3 Rework and Alteration

3.1 General

3.1.1 All repairs and alterations of existing vessels or boilers shall be performed in accordance with the rules of NBIC as adopted in WAC 296-104-502(1) by a valid R-certificate holder (subcontractor).

3.1.2 Prior to starting any repairs or alterations, the acceptance by the AIA of the work plan and procedures for alterations shall be obtained. The subcontractor is responsible for coordinating with the AIA and the BNI field engineering manager for all activities related to the vessel repairs and alterations.

3.1.3 All documentation required in Section 6 of the specification for repairs and alterations shall be submitted to BNI, AIA, and Washington State Department of Ecology. A final single documentation book containing all required submittals, with and index shall be submitted for record copy.

3.1.4 The subcontractor shall be responsible to provide temporary stiffening and jigging to prevent shell distortion during rework, welding, heat treatment, or NDE examination. The parts of temporary stiffening and rigging that contacts or is welded to austenitic stainless steels or higher alloys shall be made from the same grade of vessel material as at the attachment point. Subcontractor shall take precautions to ensure that any temporary work shall not result in permanent damage to any vessel.

3.1.5 Fabrication tolerances shall be in accordance with ASME Section VIII, Division 1, and BNI standard drawing 24590-WTP-MV-M59T-00001, *Pressure Vessel Tolerances Standard Details.*

3.1.6 The sequence of repair and modification shall be planned to permit maximum access to the internal surfaces to enable examination of all welds.

3.1.7 Plates and pipes shall be cut to size and shape by machining, grinding, shearing, plasma, laser, or water jet cutting. Plates, 3/8 in. thick and above, cut by shearing, shall have 1/8 in. allowance left on the edges which shall be removed by machining or grinding. All thicknesses of plate or pipe cut by air plasma cutting shall have the edges dressed to a smooth, bright finish. Material cut by the inert gas shielded plasma, laser, or water jet process will not require further dressing other than deburring. All lubricants, burrs, and debris shall be removed after cutting.

3.1.8 If a butt welded seam is required between materials of different thickness, the thicker material shall normally be machined on the side away from the process liquid. Machining shall ensure a smooth finished profile with no sharp corners and shall be in accordance with ASME Section VIII, Division 1.

3.1.9 For stainless steel and higher alloys, the work area shall be free of carbon steel grindings and general cleanliness shall be maintained to preclude iron contamination.

3.1.10 Caution shall be exercised to avoid to any arc strike or grinding on the pressure boundary of the vessel. Removal of any structural component that is attached to the pressure boundary shall be cut off 1/2-inch minimum (1.0-inch maximum) away from the vessel wall of attached component and its edges shall be ground smooth. Sub-contractor shall take every precaution to protect the vessel from dropping any parts/objects in order to protect the vessel inside surfaces from any damage.

3.1.11 Only stainless steel brushes, clean iron-free sand, ceramic, or stainless steel grit shall be used for cleaning stainless steel or nonferrous alloy surfaces. Cleaning tools or materials shall not have been previously used on carbon steel.

3.1.12 Internal piping bends shall have a center-line radius of a minimum of three times the pipe nominal diameter. The pipe shall not be terminated or butt welded within the bend. Minimum tangent lengths shall be in accordance with PFI ES-24.

3.1.13 Pipe bending methods, tolerances, processes, and material requirements shall comply with project specification of 24590-WTP-3PS-PS02-T0002, *Engineering Specification for Cold Bending of Pipe,* and require Buyer's approval. These requirements shall apply equally to tube bending processes. Measurement and verification of the bend shape and radius shall be provided to the buyer.

3.1.14 Cold forming Austenite Stainless Steel shall be controlled to prevent over working materials and susceptibility to stress corrosion cracking. Process may be qualified by hardness testing on areas subject to the greatest deformation after cold working or any rework or alteration. The maximum permitted hardness as per ASME SA-240 is HRB 92 for Type 304L and HRB 95 for Type 316L.

3.1.15 Registration of R-stamped repairs/alterations with the NBIC is the responsibility of the subcontractor.

3.1.16 The subcontractor may be required to cut a temporary access opening in the parent vessel to perform repairs or alterations. Arc or gas cutting shall not be used to cut the access opening. Other cutting methods shall be submitted to Buyer for approval. The access opening shall be located outside of the major seams and it should be cut with a 2-inch corner radius at minimum. The cut-out of the access opening shall be prepared and re-welded to the vessel in its original position.

3.2 Layout

3.2.1 Structural attachment welds, such as internal support rings or clips, external stiffening rings, insulation support rings, and ladder, platform or pipe support clips shall clear existing weld seams by a minimum of 2 in. from the closest edge of the welds. If the overlap of a pad-type structural attachment and a new weld seam(s) is unavoidable, the portion of the seam to be covered shall be ground flush and radio graphically examined before the attachment is welded. The new weld seam shall be radiographed per ASME Section VIII, Division 1, and Paragraph UW-51 for a minimum distance of 2 in. beyond each edge of the overlapping attachment.

3.3 Welding Requirement

3.3.1 Seller shall comply with 24590-WTP-3PS-MVB2-T0001, *Engineering Specification for Welding of Pressure Vessels, Heat Exchanges, and Boilers.*

3.3.2 Welds made by a welder employed by the R-stamp holder shall be identified by the welder's unique symbol or number applied using low stress stamps. For identifying welds on vessels in which the wall thickness is less than 1/4 in. for steel material and less than 1/2 in. for nonferrous material, vibro-etching or other suitable engraving methods shall be used in accordance with paragraph UW-37(f) of ASME Section VIII, Division 1. Any alternative method of marking shall be submitted for Buyer's review and approval.

3.3.3 The subcontractor shall be responsible for the control of the weld filler material. Procedures for the storage and control of weld filler material shall describe in detail the following as a minimum:

- Marking of containers (filler metal manufacturer's marking, Suppliers additional marking, CMTR marking or control marking)
- Heat and Lot Number Identification on the containers
- Marking of bare electrodes
- Receiving Inspection and disposition of damaged containers
- Description of storage area; Description of how unopened and opened containers are stored by weld filler material type (e.g., bare wire straight lengths, wire spools, covered electrodes, flux)
- Identification, storage and segregation of low hydrogen electrodes
- Electrode Oven marking to identify weld filler material classifications
- How weld filler material issuance is controlled and traceability to the fabricated items
- Moisture control of low hydrogen electrodes and SAW flux
- Disposition of unused and returned material
- Protection of spooled wire left on the wire drive unit between and after shifts

3.3.4 All welds shall be continuous. Stitch welding is prohibited, unless specified otherwise on the drawing.

3.3.5 All attachments such as lugs, brackets, nozzles, pads and reinforcements around openings and other members (when permitted) shall follow the contour and shape of the surface to which they will be attached.

3.3.6 Where fillet welds only are used, the maximum gap between the components being joined shall be 3/16 in. The components shall be clamped or otherwise supported during welding.

3.3.7 All internal structural component and piping welds shall be full penetration. Partial penetration and fillet welded attachments are subject to approval by the Buyer if not shown on the Buyer's drawings.

3.3.8 Weld maps for welding shall be submitted to Buyer for review prior to starting any repairs or alteration work. The weld maps shall be submitted with the Welding Procedure Specifications and type of NDE intended to use as shown on the Buyer's document. The weld map shall contain or specify, as a minimum, all of the following items:

(a) Sketch of the vessel.

(b) Material type(s) and grade(s) for each component/part (i.e., head, shell, nozzle, attachments).

(c) The Welding Procedure Specification (WPS) to be used for each weld joint (joints of the same design and similar thickness need only be shown once, including typical large and small nozzles and attachments) and whether back gouging & back welding will be performed.

(d) Actual base metal thickness (es) where each WPS will be used (this is NOT the qualified thickness range of the WPS).

(e) Type of joint (e.g, full penetration, partial penetration, fillet) and weld size.

(f) Preheat temperature to be used for each joint.

(g) The Post Weld Heat Treatment (PWHT), if required, and if an intermediate stress relief will be used.

3.3.9 NDE Plan shall be submitted for review and shall contain, specify, or address, as a minimum, all of the following items in addition to the contract requirements:

(a) An NDE map shall be included and contain a sketch of the vessel and each NDE procedure utilized for each weld joint.

(b) The field fabrication stage is stated (before PWHT, after PWHT) indicating which NDE is to be performed (this can be detailed in the NDE Map).

3.3.10 NDE procedure shall be submitted for review and shall contain, specify, or address, as a minimum, all of the following items in addition to the contract requirements:

(a) For radiographic examination, composite film viewing is not allowed.

(b) The actual weld acceptance criteria to be applied shall be specified in the Procedure. References to "See applicable code" or "See ASME Section VIII" are unacceptable.

(c) Surface preparation prior to the examination shall be described in detail (e.g. brushing, grinding, chipping, blasting, machining, solvent clean etc.).

(d) Post examination cleaning for magnetic particle examination (MT), liquid penetrant examination (PT), and ultrasonic examination (UT) shall be described (e.g., demagnetization for MT).

(e) The minimum information to be recorded on a form documenting the examination shall be specified. A copy of the report form shall be attached to the procedure. This form is referenced in 24590-WTP-3PS-MVB2-T0001, *Engineering Specification for Welding of Pressure Vessels, Heat Exchangers, and Boilers.*

3.4 All Design Levels

3.4.1 The altered shell and head sections, which are subjected to loads through welded attachments (such as lifting and tailing lugs), shall, prior to welding, be ultrasonically examined over 100 % of the areas to check for possible laminations in accordance with ASTM 578 Acceptance level C.

- For connections or attachments directly welded to the shell or head, the area examined shall extend a minimum of 3 in. beyond the extremity of the proposed weldment.
- For connections or attachments welded via a reinforcement or doubler plate, the shell area examined shall extend a minimum of 5 in. beyond each side of the perimeter of the proposed fillet weld attaching the reinforcing or doubler plate to the shell or head.

3.4.2 All full penetration welds attaching internal or external structural components to the heads or shell shall be volumetrically tested. If they are not readily ultrasonically or radiographically tested, they may be dye-penetrant tested (PT) with prior approval from the Buyer.

3.4.3 All full penetration butt welds forming part of the jacket shall be ultrasonically examined or radiographically examined. All other jacket welds require MT or PT examined.

3.5 Additional Requirements for Design Level 1 and Q Repaired or Altered Vessels

3.5.1 All nozzle reinforcement on design level 1 (L-1) and Q vessels shall be integral. Using additional reinforcing elements such as reinforcing rings or pads is prohibited. Reinforcing material shall be taken as excess thickness on the shell or head and nozzle neck. Additional reinforcing material may be provided, when required, by increasing the shell, head, or nozzle thickness, or by providing a thicker insert plate of a suitable diameter, butt welded into the shell or the head.

3.5.2 The following weldments shall be subject to volumetric examination:

- All full penetration butt welds forming part of the primary containment shall be radiographically examined.
- All nozzle-to-shell welds and other full penetration welds forming part of the primary containment not radiographically examined shall be ultrasonically examined.
- Where a main seam butt weld is located such that only part of its length lies within the primary containment, the complete length of that particular seam.
- All butt welds in internal piping

Radiography is the preferred method of volumetric examination. Where it is considered impractical to perform radiographic examination due to joint configuration, the Seller may propose ultrasonic examination.

3.6 Additional Requirements for Repaired or Altered Vessels Located in a Black Cell or Hard-to Reach Area

3.6.1 If a vessel is located in a black cell or hard-to-reach area, it shall be noted on the MDS.

3.6.2 All nozzle reinforcement shall be integral, regardless of design level. Using additional reinforcing elements, such as reinforcing rings or pads, is prohibited. Reinforcing material shall be taken as excess thickness on the shell, head, and nozzle neck. Additional reinforcing material may be provided, when required, by increasing the shell, head, or nozzle thickness, or by providing a thicker insert plate of a suitable diameter, butt welded into the shell or the head.

3.6.3 All butt welds forming part of the primary confinement shall be radiographically examined. All nozzle-to-shell welds and other full penetration welds forming part of the primary confinement not radiographically examined shall be ultrasonically examined.

3.6.4 All welds to internal components and supports such as pulse jet mixers and charge vessel supports, dip pipe supports, sparger supports, instrumentation piping supports, and pump discharge and return line supports shall, as a minimum, require 100% visual examination and

when specified on the drawing be 100% dye penetrant tested as per ASME Section VIII, Division 1.

3.6.5 Non-integral reinforcing pads are acceptable to accommodate occasional loads due to revised ground motion accelerations (RGM) or WTP site-specific ground motion (WSGM), hydrogen detonation (HPAV) loads or multiple overblow (MOB) loads as defined on the MDS.

4 Tests and Inspections

4.1 Nondestructive Examinations

4.1.1 Radiographic examination, ultrasonic examination, magnetic particle examination, dye penetrant examination, and visual examination, where specified or required, shall be performed in accordance with ASME Section VIII, Division 1 and ASME Section V.

4.1.2 Where subcontractor carries out additional nondestructive examination, such examinations shall be included in the Quality Plan or Inspection Schedule. The Buyer's representative need not witness this additional nondestructive examination but shall be notified of the NDE to be performed prior to the exam and the records of such inspections shall be made available to the Buyer's representative.

4.1.3 Nondestructive examination, including visual, must be performed by an inspector certified to the requirements of ASNT SNT-TC-1A. The interpretation of the results shall be by either Level II or Level III inspectors certified to ASNT SNT-TC-1A.

4.1.4 Ultrasonic examination shall be in accordance with Appendix 12 of ASME Section VIII, Division 1, paragraph UW-53 and Appendix 12.

4.1.5 Radiographic acceptance criteria shall be in accordance with ASME Section VIII, Division 1, Paragraph UW-51, where full radiography is required, or UW-52 where spot radiography is required.

4.1.6 Penetrant examination shall be in accordance with Appendix 8 of ASME Section VIII, Division 1.

4.1.7 Magnetic particle examination shall be in accordance with Appendix 6 of ASME Section VIII Division 1.

4.1.8 Visual examination shall be in accordance with Article 9 of ASME Section V

4.1.9 All metallic parts used shall be positively identified in accordance with 24590-WTP-3PS-G000-T0010, *Engineering Specification for Positive Material Identification (PMI) for Construction.*

4.2 Leak Test

4.2.1 Based on the nature and scope of the alterations activity, NDE may be conducted when pressure testing is not practicable. Concurrence of the buyer shall be obtained in addition to the inspector and Jurisdiction where required

4.2.2 Reinforcing pad attachment welds shall be tested for leaks with 15 psig dry air, or nitrogen and bubble forming solution.

4.3 Obstruction Test

Seller shall ensure and document that all internals, internal piping, and jacketing are free from obstructions.

4.4 Final Inspection of Completed Vessel

Final inspection of the repaired or altered vessel by the AIA to R-stamp the vessel shall be the sole responsibility of the subcontractor. The finished dimensions and cleanliness of the vessels shall comply with the relevant drawings and specifications after completion of all tests.

5 Preparation for Service

5.1 Cleaning

5.1.1 Subcontractor shall comply with 24590-WTP-3PS-G000-T0003, *Engineering Specification for Packaging, Handling, and Storage Requirements*.

6 Documentation and Submittals

6.1 Subcontractor shall comply with the requirements of forms G321-E and G321-V of the material requisition, or Attachment D1 and D2 of the subcontract, as applicable. Furnish all applicable drawings, design calculations, reports of special analyses, Welding Procedure Specifications with Procedure Qualification Records, test procedures, and all other required documents.

6.2 Design calculations shall include relevant ASME Section VIII, Division 1 formulas, and source paragraphs, values used in the formulas, the calculated results, and comparison with acceptable values. Where calculations are based on other than the ASME Section VIII, Division 1 formulas, and the source of the formulas shall be referenced. Where a computer program is used for calculations, a brief program description shall be given, including name and version of the program. If the program is not commercially available to industry, Seller shall maintain and provide, upon request, program documentation. Calculations shall include, but not be limited to:

- Code calculations

6.3 All records pertaining to the nondestructive examination, base materials, and weld filler metals shall be provided as required on the G-327-V form. Documents shall maintain identification traceable to the items or activities performed Items of production (batch, lot, component, part) shall be identified from the initial receipt and fabrication of items up to and including installation and use. Records shall be traceable to associated items and activities and accurately reflect the work accomplished or information required.

7 Quality Assurance

7.1 General Requirements

7.1.1 The subcontractor's quality assurance program requirements are included in 24590-WTP-3PS-G000-T0001, *Engineering Specification for Supplier Quality Assurance Program Requirements*.

7.1.2 The R-certificate holder (subcontractor) shall submit their Quality Control manual for review to the Buyer and AIA in accordance with 24590-WTP-3PS-G000-T0001.

7.1.3 Subcontractor's QA program, as a minimum, shall contain the requirements detailed in the supplier quality assurance program requirements data sheets listed in contract documents.

7.2 Additional Requirements for Quality Level Q Vessels

7.2.1 Subcontractor shall have in place a QA program meeting the requirements of ASME NQA-1, marked as applicable in the *Supplier Quality Assurance Program Requirements Data Sheet* attached to the material requisition, and 24590-WTP-3PS-G000-T0001.

7.2.2 All items procured or manufactured by the subcontractor in accordance with the subcontractor's QA program that meets the requirements of ASME NQA-1, and has been previously evaluated and accepted by the RPP-WTP Quality Organization.

7.2.3 Subcontractor shall submit their QA program and work plan to Buyer for review prior to commencement of work. The plan shall include documents and procedures to implement the work, and include a matrix of essential quality assurance elements cross-referenced with the documents and procedures.

Appendix A:

SAMPLE-Master Inspection Checklist for Repairs and Alterations

Appendix A: SAMPLE-Master Inspection Checklist for Repairs and Alterations

MASTER INSPECTION CHECKLIST FOR REPAIRS AND ALTERATIONS

Project: _____ Job No.: _____ ☐ Repair ☐ Alteration

Original Code: _____ _____ _____
(Section/Div.) (Edition Year) (Addenda)

Code for Repair or Alteration: _____ _____ _____
(Section/Div.) (Edition Year) (Addenda)

Boiler Identification: _____

Pressure Vessel Identification: _____

Reference Drawings: _____

No.	Activity / Task Description	Required		AI Hold Point		Field Engr. Accept		AI Accept	
		Yes	No	Yes	No	Init	Date	Init	Date
1	Valid certificate of authorization available	☐	☐	☐	☐				
2	Drawings available for repairs; Drawings available for alterations	☐	☐	☐	☐				
3	Manufacturer's Partial Data Reports for purchased parts reviewed and accepted	☐	☐	☐	☐				
4	Receiving inspection reports for Materials Completed, MTR's & C of C's Available	☐	☐	☐	☐				
5	WE-4 Records for Welding, NDE and Heat Treatment Completed	☐	☐	☐	☐				
6	Final Visual Examination for Material ID, Dimensions, Configuration, Location and Surface Defects	☐	☐	☐	☐				
7	Pressure Test Complete	☐	☐	☐	☐				
8	Records Retained	☐	☐	☐	☐				
9	Reports of welded repair or alteration complete	☐	☐	☐	☐				
10	Nameplate attached or stamping performed ("R" symbol stamp)	☐	☐	☐	☐				

Master Inspection Checklist for Repairs & Alterations

Appendix A: SAMPLE-Field Welding Checklist - Form WR-4

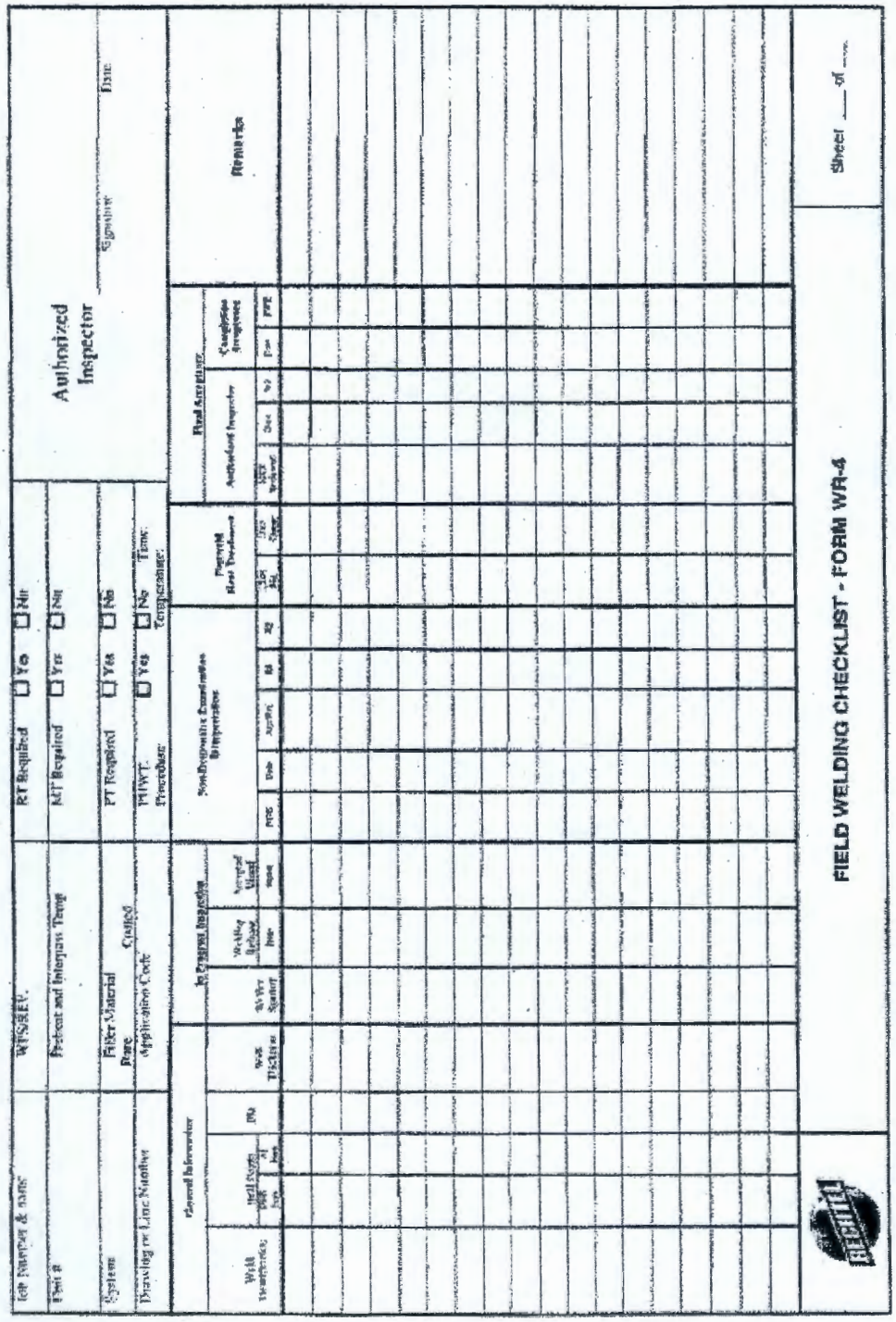

Field Welding Checklist - Form WR-4

ISSUED BY
RPP-WTP PDC

R11274033

Specification Change Notice

CHANGE DOCUMENT NO.
24590-WTP-3PN-MVB2-00010

JOB NO.	TITLE FOR CHANGE NOTICE
24590	Stiffening and stabilizing the openings of Access Opening repair vessels

DESIGN DOCUMENT NUMBER	REV	DESIGN DOCUMENT NUMBER	REV
24590-WTP-3PS-MVB2-T0002	000		

PART OF DESIGN CHANGE PACKAGE (DCP)? ☐ Yes ☒ No DCP No.: Rev:

JUSTIFICATION FOR CHANGE
Include the stiffining of access opening for repair and alteration as part of the Sub-contractor's scope.

CAUSE CODE

Supersedes Change Document ☐ Yes ☒ No

REQUIREMENTS REVIEW

Client Approval Required ☐ Yes ☒ No | Interface Resolution Required * ☐ Yes ☒ No

Address any "yes" answers in the description

DESCRIPTION OF CHANGE

Specification Changes Retroactive ☐ Yes ☒ No

Added new paragraph 3.1.4 as follows:

For access openings required for vessel alteration, the opening sizes shall be kept to the minimum size to allow efficient work and avoid existing weld seams in the vessel where practicable and shall be designed to ensure that the vessel will not *collapse, rupture, or fail* during alteration and to reduce vessel distortion during replacement. Sub-contractor is responsible for stiffening and stabilizing the openings and removed plate as required. Sub-contractor shall use approved welding procedure designed to minimize vessel distortion during re-welding of these access openings. The maximum cut-out access opening shall not exceed 8.0 ft. by 8.0 ft.

Please note that source, special nuclear, and byproduct materials, as defined in the Atomic Energy Act of 1954 (AEA) are regulated at the U. S. Department of Energy (DOE) facilities exclusively by DOE acting pursuant to its AEA authority. DOE asserts that pursuant to AEA, it has sole and exclusive responsibility and authority to regulate source, special nuclear, and byproduct materials at DOE-owned nuclear facilities. Information contained herein on radionuclides is provided for process description purposes only.

ORIGINATOR	CHECKER
Mohan Arulampalam	Bart Makadia

Reviews

E&NS - Dick Carlstrom	PEQ - Sean Sweeney		

Approval(s)

PEQ - John Julyk			

Date *(inserted by final approver)*: 9/22/10

ISSUED BY
RPP-WTP PDC

R11294834

Specification Change Notice

CHANGE DOCUMENT NO.
24590-WTP-3PN-MVB2-00011

JOB NO.	TITLE FOR CHANGE NOTICE
24590	Cutting Method for Access Opening

DESIGN DOCUMENT NUMBER	REV	DESIGN DOCUMENT NUMBER	REV
24590-WTP-3PS-MVB2-T0002	0		

PART OF DESIGN CHANGE PACKAGE (DCP)? ☐ Yes ☒ No DCP No.: N/A Rev:

JUSTIFICATION FOR CHANGE	CAUSE CODE
Define requirements for Cutting method and weld preparation.	42

Supersedes Change Document ☐ Yes ☒ No

REQUIREMENTS REVIEW

Client Approval Required ☐ Yes ☒ No | Interface Resolution Required * ☐ Yes ☒ No

Address any "yes" answers in the description

DESCRIPTION OF CHANGE

Specification Changes Retroactive ☐ Yes ☒ No

Revise paragraph 3.1.16 to read as follows:

3.1.16
A temporary access opening in the vessel shell will need to be made in order to perform repairs or alterations. Subcontractor shall submit drawings showing access opening location relative to existing weld seams to avoid cutting across an existing weld seam. Subcontractor shall include proposed cutting method on drawing. The access opening shall be cut with a 2-inch minimum corner radius.

Subcontractor is responsible to clean up and remove any debris from the cutting or machining operation. The internal and external of the vessel and any nearby internal or external components shall be protected from molten metal, slag, dross, splatter, water or abrasives utilized in the cutting operation. Prior to performing the procedure, the subcontractor shall install protective measures which capture or direct the particulates in a controlled manner to the extent that minimal clean up is necessary.

Add the following new paragraphs 3.1.17 & 3.1.18 as follows:

3.1.17
The original cut-out of the access opening shall be prepared and re-welded to the vessel using a full penetration butt weld. The root gap opening for re-welding shall be consistent with the Welding Procedure Specification(s) (WPS) utilized for the weld. Prior to performing welding the root gap shall be visually examined for compliance to the WPS(s). Cut-out shall be tacked into place and prepared for welding prior to the examination. All tack welds shall be made in the grove using an approved WPS and consumed in the weld out of the joint.

3.1.18
100% of the new weld seam shall be examined using either radiographic or ultrasonic examination in accordance with the applicable submitted procedure and Project Specifications.

Please note that source, special nuclear, and byproduct materials, as defined in the Atomic Energy Act of 1954 (AEA) are regulated at the U. S. Department of Energy (DOE) facilities exclusively by DOE acting pursuant to its AEA authority. DOE asserts that pursuant to AEA, it has sole and exclusive responsibility and authority to regulate source, special nuclear, and byproduct materials at DOE-owned nuclear facilities. Information contained herein on radionuclides is provided for process description purposes only.

Specification Change Notice

CHANGE DOCUMENT NO.
24590-WTP-3PN-MVB2-00011

JOB NO.	TITLE FOR CHANGE NOTICE
24590	Cutting Method for Access Opening

DESCRIPTION OF CHANGE

Add the following new paragraph 5.1.2 for cleaning requirements as follows:

Contact materials including marking materials, temperature indicating crayons, adhesive backed and pressure sensitive tape, and barrier and wrap materials may be used only under the following limits ***(not applicable to blankets, sheeting etc. to be used for temporary protective measures during cutting and welding operations):***

- The total halogen content shall not exceed 200 parts per million (PPM)
- The total sulfur content shall not exceed 400 PPM
- No intentionally added low melting point metals such as lead, zinc, copper, tin, antimony, and mercury.

Anti spatter compounds shall not contain chlorine, fluorine, sulfur, mercury or other low melting point metals.

Materials and residue shall be completely removed when no longer required. Cleaning materials may be non-halogenated solvents or potable water containing no more than 50 PPM chloride. Contact materials shall be controlled and documented in accordance with the subcontractor's inspection and test plan as approved by the Buyer.

ORIGINATOR	CHECKER
Mohan Arulampalam	Steve Vail

Reviews			
E&NS - M. Rosenthal	MET - R. Davis 10/19/10		

Approval(s)			
PEQ - John Julyk			

Date *(inserted by final approver)*: 10/18/10

Attachment 2
11-ESQ-141
(32 Pages Double-Sided)

Permit Package PTF-079b, Revision 0
Miscellaneous Treatment Unit for PT PJV Demisters
(PJV-DMST-00002A/B/C) at Elevation 56 FT

Permit Package Description

PTF-079b, Miscellaneous Treatment Unit for PT PJV Demisters (PJV-DMST-00002A/B/C) at Elevation 56 ft

The permit package PTF-079b covers the pulse jet ventilation (PJV) system demisters that will be located on the 56 ft elevation of the Pretreatment Facility. The demisters provide particulate and aerosol control for the PJV off-gas system. The demisters function to reduce loading to extend life of the downstream HEPA filters.

Package PTF-079b includes an assessment report signed by an Independent Qualified Registered Professional Engineer (IQRPE) certifying certain portions of the permit package. The package also contains equipment assembly drawings, a mechanical data sheet, and corrosion evaluation. Accompanying these documents are also outstanding change documents that have not been incorporated into the documents.

Permit Package No. PTF-079b, DRAFT
Miscellaneous Unit for PT Facility PJV System at El. 56 ft
(Demisters PJV-DMST-00002A/B/C)

Table of Contents

For Incorporation into the Permit

Engineering Document Title	Document Number	Rev.	Permit Condition	Included	Remarks
IQRPE Independent Assessment Report	CCN 208820	00A	III.10.G.10.c.i	Y	
Permit Drawings					
General Arrangement Plan Pretreatment Facility General Arrangement Plan at El. 56'-0"	24590-PTF-P1-P01T-00003	4	III.10.G.10.c.ii	N	Included in Operating Group 10, Appendix 8.4
Process Flow Diagram Pretreatment RFD/PJM Exhaust (PJV) Systems PVP/PVV/PJV	24590-PTF-M5-V17T-00021002	2	III.10.G.10.c.ii	N	Included in Operating Group 10, Appendix 8.1
Piping & Instrumentation Diagram P&ID - PTF Pulse Jet Ventilation System Inlet Header to Demister Outlet	24590-PTF-M6-PJV-00002	3	III.10.G.10.c.ii	N	Included in Operating Group 10, Appendix 8.2
Equipment Assembly Drawings					
Equipment Assembly PTF Demister Vessel PJV-DMST-00002A/B/C Sheet 1 of 2	24590-PTF-MV-PJV-00002001 • 24590-PTF-MVN-PJV-00005 • 24590-PTF-MVN-PJV-00006 • 24590-PTF-MVN-PJV-00008 • 24590-WTP-SDDR-MS-09-00001 • 24590-WTP-SDDR-MS-10-00047	0	III.10.G.10.c.ii	Y	
Equipment Assembly PTF Demister Vessel PJV-DMST-00002A/B/C Sheet 2 of 2	24590-PTF-MV-PJV-00002002 • 24590-PTF-MVN-PJV-00007 • 24590-WTP-SDDR-MS-09-00001	0		Y	
Specifications					
Engineering Specification for Pressure Vessel Design and Fabrication	24590-WTP-3PS-MV00-T0001	4	III.10.G.10.c.ii III.10.G.10.c.iii	N	Included in Operating Group 10, Appendix 7.7
Engineering Specification for Seismic Qualification Criteria for Pressure Vessels	24590-WTP-3PS-MV00-T0002	3	III.10.G.10.c.ii III.10.G.10.c.iii	N	Included in Operating Group 10, Appendix 7.7
Engineering Specification for Pressure Vessel Fatigue Analysis	24590-WTP-3PS-MV00-T0003	3	III.10.G.10.c.ii III.10.G.10.c.iii	N	Included in Operating Group 10, Appendix 7.7

Permit Package No. PTF-079b, DRAFT
Miscellaneous Unit for PT Facility PJV System at El. 56 ft
(Demisters PJV-DMST-00002A/B/C)

Table of Contents

Engineering Document Title	Document Number	Rev.	Permit Condition	Included	Remarks
Engineering Specification for Positive Material Identification (PMI)	24590-WTP-3PS-G000-T0002	8	III.10.G.10.c.ii III.10.G.10.c.iii	N	Included in Operating Group 10, Appendix 7.7
Mechanical Data Sheet: Demister	24590-PTF-MVD-PJV-00004	0	III.10.G.10.c.ii	Y	
Secondary Containment Design	24590-WTP-PER-CSA-02-001	9	III.10.G.10.c.ii III.10.G.10.c.iii	N	Included in Operating Group 10, Appendix 7.5
Corrosion Protection for Buried Components	N/A	-	III.10.G.10.c.iv	N	Not applicable to the PTF PJV System
Corrosion Evaluation PJV-DMST-00002A/B/C (PTF) PJV Demister	24590-PTF-N1D-PJV-00003	0	III.10.G.10.c.v	Y	
Installation of Tank Systems and Miscellaneous Treatment Systems	24590-WTP-PER-CON-02-001	6	III.10.G.10.c.ix	N	Included in Operating Group 10, Appendix 7.12

Permit Package No. PTF-079b, DRAFT
Miscellaneous Unit for PT Facility PJV System at El. 56 ft
(Demisters PJV-DMST-00002A/B/C)

Table of Contents

For Incorporation into the Administrative Record

Engineering Document Title	Document Number	Revision	Permit Condition	Included	Remarks
Structural Support Calculations for Off Specification, Non-Standard or Field Fabricated Tanks	N/A	-	III.10.G.10.c.iii	N	Not applicable to the PTF PJV Miscellaneous Unit Systems.
System Description Documents					
System Description for the PTF Pulse Jet Ventilation System (PJV)	• 24590-PTF-3YD-PJV-00001	0	III.10.G.10.c.vii	N	Document will be submitted once Part II of System Description is completed.
Prevention of Hydrogen Accumulation in WTP Tank Systems and Miscellaneous Treatment Unit Systems	24590-WTP-PER-PR-03-001	1	III.10.G.10.c.x	N	ORP Letter 03-ED-130 dated 8/26/2003 Transmitting LAW-29, Rev.0 to Ecology
Control of Toxic Vapors and Emissions from WTP Tank Systems and Miscellaneous Unit Systems	24590-WTP-PER-PR-03-002	3	III.10.G.10.c.xi	N	Incorporated into Administrative Record, CCN 178564, dated May 2, 2008
Material and Energy Balance					
Flowsheet Bases, Assumptions, and Requirements	24590-WTP-RPT-PT-02-005	5	III.10.G.10.c.viii	N	CCN 229439 "Submittal of Mass and Energy Balance Information".
SP3 Feed Vector and Organics for Steady State Flowsheet	24590-WTP-MRQ-PET-10-0025	0			
Steady -State Flowsheet (AES) SP3 Feed Vector and Organics Run Results	24590-WTP-MRR-PET-10-002	2			

ISSUED BY
RPP-WTP PDC

R11362778

208820

AREVA

AFS-11-0232

April 27, 2011

RPP-WTP
RECEIVED
MAY 03 2011
BY PDC

Ms. Trina Howard
Subcontract Administrator
Bechtel National, Inc.
2435 Stevens Center Place
Richland, Washington 99354

Dear Ms. Howard:

BECHTEL NATIONAL, INC. CONTRACT NO. 24590-CM-HC4-HXYG-00211 IQRPE STRUCTURAL INTEGRITY ASSESSMENT REPORT FOR PTF PJV MISCELLANEOUS UNITS (DEMISTERS) PJV-DMST-00002A/B/C (IA-3005077-000)

The integrity assessment of the subject units has been completed per the contract requirements and is enclosed for your use. The assessment found that the design is sufficient to ensure that the units are adequately designed and have sufficient structural strength, compatibility with the waste(s) to be processed/stored/treated, and corrosion protection to ensure that they will not collapse, rupture, or fail.

If you have any questions, please contact Tarlok Hundal at (509) 371-1975, or via email at tarlok.hundal@areva.com.

Sincerely,

Fred R. Renz
Contracts Administration
AREVA Federal Services LLC
Richland Office

Enclosure (1)

llm

cc: D. C. Pfluger, MS 5-L w/enclosure (2)

AREVA Federal Services LLC

2101 Horn Rapids Road, RC-19, Richland, WA 99354, P.O. Box 840, Richland, WA 99352
Tel.: 509-375-8096 - Fax: 509-375-8495 - www.areva.com

IA-3005077-000

IQRPE STRUCTURAL INTEGRITY ASSESSMENT REPORT FOR PTF PJV MISCELLANEOUS UNITS (DEMISTERS) PJV-DMST-00002A/B/C

Please note that source, special nuclear and byproduct materials, as defined in the Atomic Energy Act of 1954 (AEA), are regulated at the U.S. Department of Energy (DOE) facilities exclusively by DOE acting pursuant to its AEA authority. DOE asserts, that pursuant to the AEA, it has sole and exclusive responsibility and authority to regulate source, special nuclear, and byproduct materials at DOE-owned nuclear facilities. Information contained herein on radionuclides is provided for process description purposes only.

IA-3005077-000

IQRPE STRUCTURAL INTEGRITY ASSESSMENT REPORT FOR PTF PJV MISCELLANEOUS UNITS (DEMISTERS) PJV-DMST-00002A/B/C

"I, Tarlok Singh Hundal have reviewed and certified a portion of the design of a new tank system or component located at the Hanford Waste Treatment Plant, owned/operated by Department of Energy, Office of River Protection, Richland, Washington. My duties were independent review of the current design for the PTF PJV Miscellaneous Units (Demisters) PJV-DMST-00002A/B/C, as required by the Washington Administrative Code, *Dangerous Waste Regulations*, Section WAC-173-303-640(3) (a) through (g) applicable components."

"I certify under penalty of law that I have personally examined and am familiar with the information submitted in this document and all attachments and that, based on my inquiry of those individuals immediately responsible for obtaining the information, I believe that the information is true, accurate, and complete. I am aware that there are significant penalties for submitting false information, including the possibility of fine and imprisonment."

The documentation reviewed indicates that the design fully satisfies the requirements of the WAC.

The attached review is ten (10) pages numbered one (1) through ten (10).

TS Hundal

Signature

4/27/11

Date

Scope	Scope of this Integrity Assessment	This Integrity Assessment addresses three Miscellaneous Units (MUs), the Demisters (PJV-DMST-00002A/B/C) considered as vessels are components of the PTF Pulse Jet Ventilation System (PJV). These MUs are located in PT Filter Cave (Room P- 0335) at Elevation 56'-0" of the Pretreatment Facility Building as shown on the General Arrangement Plan drawing 24590-PTF-P1-P01T-00003.
Summary of Assessment		For each item of "Information Assessed" (i.e., Criteria) on the following pages, the items listed under "Source of Information" were reviewed and found to furnish adequate design requirements and controls to ensure that the design fully satisfies the requirements of Washington Administrative Code (WAC), Chapter 173-303 WAC, *Dangerous Waste Regulations,* WAC-173-303-640, *Tank Systems.*

References	Material Requisition, Specifications, and Plant Drawings	Material Requisition (MR): 24590-QL-MRA-MVA0-00013, Rev. 2, PJV Demisters (N215), including Supplement # S0001 thru # S0004 and TCN # T0001 thru T0004 to Rev. 2. Specifications: Following Specifications including their revision and specification change notices (SCNs) are listed in the MR document listed above: 24590-WTP-3PS-MV00-T0001, Engineering Specification for Pressure Vessel Design and Fabrication; 24590-WTP-3PS-MV00-T0002, Engineering Specification for Seismic Qualification of Criteria of Pressure Vessels; 24590-WTP-3PS-MV00-T0003, Engineering Specification for Pressure Vessel Fatigue Analysis; 24590-WTP-3PS-MVB2-T0001, Engineering Specification for Welding of Pressure Vessels, Heat Exchangers, Heat Exchangers, and Boilers; 24590-WTP-3PS-G000-T0001, General Specification for Supplier Quality Assurance Program Requirements; 24590-WTP-3PS-G000-T0002, Engineering Specification for Positive Material Identification (PMI); 24590-WTP-3PS-G000-T0003, General Specification for Packaging, Handling, and Storage Requirements; 24590-WTP-3PS-SS90-T0001, Engineering Specification for Seismic Qualification of Seismic Category I/II Equipment and Tanks. Plant Drawings: 24590-PTF-P1-P01T-00003, Rev. 4, Pretreatment Facility General Arrangement Plan at Elev. 56'-0"; 24590-PTF-M6-PJV-00002, Rev. 3, P&ID-PTF Pulse Jet Ventilation System Inlet Header to Demister Outlet; 24590-PTF-M5-V17T-00021002, Rev. 2, Process Flow Diagram Pretreatment RFD/PJM Exhaust (PJV) Systems PVP/PVV/PJV; 24590-PTF-DB-S13T-00059, Rev. 1, Pretreatment Facility Structural, Concrete Forming, Embed Layout Details El. 56'-0" Sh 6; 24590-PTF-DB-S13T-00252, Rev. 2, Pretreatment Facility Structural Concrete Forming Partial Plan El. 56'-0" Sh 7; 24590-PTF-DB-S13T-00070, Rev. 0, Pretreatment Facility Structural, El.56'-0" Liners Filter Cave Area; 24590-PTF-DD-S13T-00072, Rev. 0, Pretreatment Facility Structural, El.56'-0" Liners Sections and Details; 24590-PTF-DD-S13T-00221, Rev. 0, Pretreatment Facility Structural Concrete Embedments El. 56'-0" Vessels Sh 1.

References (cont'd)	Vendor Drawings, Mechanical Data Sheet, and System Description	Vendor Fabrication Drawings (Bechtel Code 1 and 2 Drawings*): 24590-QL-POB-MVA0-00013-04-00001, Rev. 00G, PTF Demister Vessel General Notes; 24590-QL-POB-MVA0-00013-04-00002, Rev. 00D, PTF Demister Vessel Nozzle Details; 24590-QL-POB-MVA0-00013-04-00003, Rev. 00F, PTF Demister Vessel Partial Sections & Skirt Details; 24590-QL-POB-MVA0-00013-04-00004, Rev. 00F, PTF Demister Vessel Outline/Assembly Drawing; 24590-QL-POB-MVA0-00013-04-00006, Rev. 00F, PTF Demister Vessel, 3-PC Sitting Mist Eliminator Element. * Code 1 Drawing: BNI reviewed and approved the drawing for fabrication. Code 2 Drawing: BNI reviewed the drawing with comments and approved it with conditional acceptance for fabrication (Final acceptance and approval of fabrication is subject to resolution of the comments). Mechanical Data Sheet: 24590-PTF-MVD-PJV-00004, Rev. 0, PJV Demisters (PJV-DMST-00002A/B/C), including SDDR # 24590-WTP-SDDR-MS-09-00113). System Description: 24590-PTF-3YD-PJV-00001, Rev. 0, Systems Description for PTF Pulse Jet Ventilation System (PJV), including SDCN # 24590-PTF-3YN-PJV-00004.

	Information Assessed	Source of Information	Assessment
Design	Vessel design standards are appropriate and adequate for the vessel's intended use.	Drawings, Specifications, and Mechanical Data Sheet listed above under References; ASME Boiler & Pressure Vessel (B&PV) Code, Section VIII, Div. 1, Rules for Construction of Pressure Vessels.	The PTF Demisters (PJV-DMST-00002A/B/C) are components in the PTF PJV system. These Demisters or MUs are located in Room P-0355, at Elevation 56'-0" as shown on the PTF General Arrangement Plan drawing. They are accessible for maintenance by remote control. The Mechanical Data Sheet (MDS) requires that these vessels be designed, fabricated, and tested in accordance with the requirements of ASME B&PV Code, Section VIII, Div. 1. The MDS also requires that the Demisters shall be code stamped and registered with the National Board of Registration. Supplementary requirements are specified in the referenced engineering specifications. The supplementary requirements include structural design, positive material identification, fabrication tolerances, acceptable welding procedures, welder qualifications and testing records, NDE inspections and records, and packaging, handling, and storage requirements for the Demister assemblies. The Demister vessels are identified as Quality Level (Q) and Seismic Category (SC-I) in the Mechanical Data Sheet and drawings. The requirements listed in the aforementioned codes, data sheet, and documents and standards identified in specifications, are adequate and acceptable design codes and standards for the intended use of the Demisters.

	Information Assessed	Source of Information	Assessment
Design (cont'd)	If a non-standard vessel is to be used, the design calculations demonstrate sound engineering principles of construction.	Drawings and Mechanical Data Sheet listed above under References; ASME Boiler & Pressure Vessel (B&PV) Code, Section VIII, Div. 1, Rules for Construction of Pressure Vessels; 24590-QL-POB-MVA0-00013-01-00001, Rev. 00B, ASME Code Calculations for PJV Demister Vessels (Vendor Calculation); 24590-QL-POB-MVA0-00013-01-00002, Rev. 00B, Nozzle Load Calculations for PJV Demister Vessels (Vendor Calculation); 24590-QL-POB-MVA0-00013-10-00001, Rev. 00D, Seismic Qualification of PJV Demister Vessels (Vendor Calculation).	The PTF Demisters (PJV-DMST-00002A/B/C) are standard ASME B&PV Code Section VIII, Div.1 assemblies to be delivered after design, fabrication, inspection, and testing to specific design parameters listed in the Mechanical Data Sheet. Review of the vendor drawings and Vendor Calculations demonstrates that sound engineering principles of design/construction have been used.

	Information Assessed	Source of Information	Assessment
Design (cont'd)	Vessel has adequate strength, after consideration of the corrosion allowance, to withstand the operating pressure, operating temperature, and seismic loads.	Mechanical Systems Data Sheet, Specifications, and Drawings listed above under References; ASME Boiler & Pressure Vessel (B&PV) Code, Section VIII, Div. 1, Rules for Construction of Pressure Vessels; 24590-QL-POB-MVA0-00013-01-00001, Rev. 00B, ASME Code Calculations for PJV Demister Vessels (Vendor Calculation); 24590-QL-POB-MVA0-00013-01-00002, Rev. 00B, Nozzle Load Calculations for PJV Demister Vessels (Vendor Calculation); 24590-QL-POB-MVA0-00013-10-00001, Rev. 00D, Seismic Qualification of PJV Demister Vessels (Vendor Calculation); 24590-PTF-DDC-S13T-00029, Rev. B, Embed Design for PVP-HEME-00001A/B/C, PJV-DMST-00002/A/B/C and DIW-VSL-00002/3 at El. 56' in the PTF Building (Design Calculation); 24590-PTF-N1D-PJV-00003, Rev. 0, Corrosion Evaluation (PJV-DMST-00002A/B/C) PTF PJV Demister.	The Mechanical Data Sheet identifies the Demisters operating pressure and temperature ranges, the materials selected for the vessel and its internals, the corrosion allowance, the quality level, and the seismic design requirements. The ASME B&PV Code, Section VIII, Div. 1, requires that corrosion allowance material be considered when evaluating the adequacy of vessel components for these loads at the end of its life. Detailed requirements for seismic design of the columns are furnished in the Engineering Specification for Seismic Qualification of Seismic Category I/II Equipment and Tanks. The vendor drawings show that each Demister vessel is 96" ID x 150" height, between tangent lines with top and bottom ASME F&D Heads. Each vessel is built with 3/4" thick shell and 1/2" thick heads, all using 304L stainless steel plates (max. 0.03% C dual certified) hereinafter known as 304L material. The Corrosion Evaluation document recommended the 304L material with adequate corrosion allowance. The Vendor and Design Calculations reviewed show that the Demisters will withstand operating pressure, temperature, corrosion allowance, and seismic loads for the specified design life of 40 years.

Information Assessed		Source of Information	Assessment
Foundation	Vessel foundation will maintain the load of a full vessel.	Mechanical Data Sheet and Specifications listed above under References; 24590-WTP-DC-ST-04-001, Rev. 3A, Seismic Analysis and Design Criteria; 24590-WTP-DC-ST-01-001, Rev. 12D, Structural Design Criteria; 24590-QL-POB-MVA0-00013-01-00001, Rev. 00B, ASME Code Calculations for PJV Demister Vessels (Vendor Calculation); 24590-QL-POB-MVA0-00013-10-00001, Rev. 00D, Seismic Qualification of PJV Demister Vessels (Vendor Calculation); 24590-PTF-DDC-S13T-00029, Rev. B, Embed Design for PVP-HEME-00001A/B/C, PJV-DMST-00002/A/B/C and DIW-VSL-00002/3 at El. 56' in the PTF Building (Design Calculation).	The Mechanical Data Sheet for Demisters requires that these vessels' support frames are to be designed in accordance with the applicable provisions specified in Seismic Analysis and Design Criteria and Engineering Specification for Seismic Qualification of Seismic Category I/II Equipment and Tanks. The requirements of the above listed two documents require the use of Structural Design Criteria. The Vendor and Design Calculations reviewed show that each Demister support skirt resting on a base plate is adequately designed to sustain the applicable loads. The base plate doughnut disc in turn is anchored to the floor with anchor bolts welded to the steel plates embedded in concrete slab. The slab is supposed to sustain the full load of the Demisters, however, its assessment is not in the scope of this integrity assessment. It will be covered under a separate report.
	If in an area subject to flooding, the vessel is anchored.	Mechanical Data Sheet, Specifications, and Drawings listed above under References; 24590-PTF-PER-M-04-001, Rev. 0, Flooding Volume for the PTF Facility; 24590-QL-POB-MVA0-00013-10-00001, Rev. 00D, Seismic Qualification of PJV Demister Vessels (Vendor Calculation); 24590-PTF-DDC-S13T-00029, Rev. B, Embed Design for PVP-HEME-00001A/B/C, PJV-DMST-00002/A/B/C and DIW-VSL-00002/3 at El. 56' in the PTF Building (Design Calculation).	The PTF Demisters are part of the PJV system. This PJV system is a combined system. It is comprised of the process treatment for removal of condensate and mist from the RFD/PJM exhausts followed by the HVAC exhaust equipment consisting of filters and fans. Demisters are commonly used to remove fine aerosols and mist. Design for flooding is not a required load case in the Flooding Volume document or in Mechanical Data Sheet. However, the Vendor Calculation, Design Calculation, and drawings reviewed show that the Demisters are anchored to the floor concrete slab providing adequate seismic resistance.

	Information Assessed	Source of Information	Assessment
Foundation (cont'd)	Vessel system will withstand the effects of frost heave.	Drawings listed above under References; 24590-WTP-DC-ST-01-001, Rev. 12D, Structural Design Criteria.	The Structural Design Criteria document requires that all structural foundations extend a distance below grade that exceeds the depth of the frost line in order to preclude frost heave. The frost line is 30 in. below grade. The plant drawings show that the Demisters are located at above grade floor Elevation 56'-0" inside the PTF Building, therefore, they are not subject to the frost heave effects.
Waste Characteristics	Characteristics of the waste to be stored or treated have been identified (ignitable, reactive, toxic, specific gravity, vapor pressure, flash point, storage temperature)	Mechanical Data Sheet and System Description listed above under References; 24590-PTF-N1D-PJV-00003, Rev. 0. Corrosion Evaluation, PTF PJV Demisters (PJV-DMST-00002A/B/C); 24590-WTP-PER-PR-03-002, Rev. 3, Control of Toxic Vapors and Emissions from WTP Tank and Miscellaneous Unit Systems; 24590-WTP-PER-PR-03-001, Rev. 1, Prevention of Hydrogen Accumulation in WTP Tank Systems and Miscellaneous Treatment Unit Systems.	The Mechanical Data Sheet presents the PJV system's specific gravity, operating temperatures and pressures. The Corrosion Evaluation report addresses the chemical composition of the exhaust gases and the routine and non-routine operations and potential temperatures range to select appropriate Demister materials and specify the corrosion allowance. The main safety function of the Demisters is to provide mechanism to mitigate radioactive release to environment. The mitigation and control of the waste's hazards are appropriately addressed in the Prevention of Hydrogen Accumulation document and Control of Toxic Vapors and Emissions document. These two documents do not specifically list the PTF Demisters to exhibit any dangerous waste characteristics such as reactive or ignitable. The System Description document and Control of Toxic Vapors and Emissions document describe that the Demisters are designed to remove fine aerosols and mist from the exhaust gases to ensure reduced loading of HEPA filters downstream from them. The Demister design is required to provide an intact housing pressure boundary during normal operations and during and after earthquake loads.

	Information Assessed	Source of Information	Assessment
Waste Characteristics (cont'd)	Vessel is designed to store or treat the wastes with the characteristics defined above and any treatment reagents.	System Description listed above under References; 24590-PTF-N1D-PJV-00003, Rev. 0. Corrosion Evaluation, PTF PJV Demisters (PJV-DMST-00002A/B/C).	The Corrosion Evaluation document demonstrates that the Demisters are designed to process the exhaust gases as discussed above. The System Description document discusses normal and abnormal operations for the Demisters (PJV-DMST-00002A/B/C). Reagents will not normally be added to the Demisters during normal operations.
	The waste types are compatible with each other.	System Description listed above under References.	The System Description document for the PTF PJV System does not describe any operations where incompatible wastes are mixed in these Demisters.
Corrosion	Vessel material and protective coatings ensure the vessel structure is adequately protected form the corrosive effects of the waste stream and external environments (expected to not leak or fail for the design life of the system)	24590-PTF-N1D-PJV-00003, Rev. 0. Corrosion Evaluation, PTF PJV Demisters (PJV-DMST-00002A/B/C); 24590-QL-POB-MVA0-00013-01-00001, Rev. 00B, ASME Code Calculations for PJV Demister Vessels (Vendor Calculation); 24590-QL-POB-MVA0-00013-10-00001, Rev. 00D, Seismic Qualification of PJV Demister Vessels (Vendor Calculation).	The Corrosion Evaluation report selection of 304L material provides adequate resistance to pitting corrosion, stress corrosion cracking, and crevice corrosion. This report identifies 0.04 in. corrosion allowance for the Demisters. The Vendor Calculations reviewed show that the corrosion allowance has been appropriately accounted for in the design process and the corrosion allowance provided is adequate for the 40-year life of the Demisters.

	Information Assessed	Source of Information	Assessment
Corrosion (cont'd)	Corrosion allowance is adequate for the intended service life of the vessel.	Mechanical Data Sheet and Drawings listed above under references; 24590-PTF-N1D-PJV-00003, Rev. 0. Corrosion Evaluation, PTF PJV Demisters (PJV-DMST-00002A/B/C); 24590-QL-POB-MVA0-00013-01-00001, Rev. 00B, ASME Code Calculations for PJV Demister Vessels (Vendor Calculation); 24590-QL-POB-MVA0-00013-01-00002, Rev. 00B, Nozzle Load Calculations for PJV Demister Vessels (Vendor Calculation); 24590-QL-POB-MVA0-00013-10-00001, Rev. 00D, Seismic Qualification of PJV Demister Vessels (Vendor Calculation).	The basis for the Demisters material selection is provided in the Corrosion Evaluation report. Minimum corrosion allowance is appropriately listed in the Mechanical Data Sheet. The Vendor Calculations and drawings reviewed show that the plate thickness of each vessel is adequate for its intended service life of 40 years.
Pressure Relief	Pressure controls (vents and relief valves) are adequately designed to ensure pressure relief if normal operating pressures in the vessel are exceeded.	System Description and Mechanical Data Sheet listed above under References; 24590-PTF-N1D-PJV-00003, Rev. 0. Corrosion Evaluation, PTF PJV Demisters (PJV-DMST-00002A/B/C).	The System Description provides a discussion of the normal operating conditions for the PTF Pulse Jet Ventilation (PJV) system. The Mechanical Data Sheet for the Demisters lists the maximum operating internal and external pressure of 0 psi and 1.3 psi, respectively, however, the Demisters are designed for 15 psi internal pressure and full vacuum external pressure conditions. The Demisters are designed for pressures which are much higher than the normal operation conditions, therefore, they will handle any significant pressure fluctuation in the exhaust gas system. Each Demister is also provided with a vent which will prevent pressure buildup in the vessel.

Drawing Change Notice

CHANGE DOCUMENT NO.
24590-PTF-MVN-PJV-00005

JOB NO.	TITLE FOR CHANGE NOTICE	ISSUED BY
24590	Addition of 3" diameter Purex Connector as Vacuum Breaker	RPP-WTP PDC

R11003709

DESIGN DOCUMENT NUMBER	REV NO	TITLE OF DESIGN DOCUMENT
24590-PTF-MV-PJV-00002001	0	EQUIPMENT ASSEMBLY, PTF DEMISTER VESSEL, PJV-DMST-00002A/B/C, SHEET 1 OF 2

PART OF DESIGN CHANGE PACKAGE (DCP)? ☐ Yes ☒ No DCP No.: Rev:

JUSTIFICATION FOR CHANGE	TREND CODE-NUMBER
Vacuum breaker increased in size to 3" diameter from 3/4" diameter as a result of revisions to P&ID, 24590-PTF-M6-PJV-00002 Rev. 3	TBD

Supersedes Change Document ☐ Yes ☒ No

ECN Needed ☐ Yes ☒ No

REQUIREMENTS REVIEW

Client Approval Required ☐ Yes ☒ No | Interface Resolution Required * ☐ Yes ☒ No

Address any "yes" answers in the description

DESCRIPTION OF CHANGE:

1. Delete General Notes 14, 15, & 16 in Zone E-2, delete reference to Note 14 in Zone G-7, and delete references to Notes 14 & 15 and delete pipe stubs located 2' - 0" and 3' - 0" from vessel centerline in Zone D-7.

2. Add 3" diameter Sched 80S nozzle, 3" dia. Purex connector, and kickplate at top dead center of vessel head in Zones D - 7 and G - 7. Deadweights of the 3" Vertical Blank Assembly (see BNI Dwg 24590-WTP-P61-P27T-00010 Rev. 0) and 3" Connector Block (see BNI Dwg 24590-WTP-M61-P23T-00016 Rev. 2, Piece 1) shall be used to analyze nozzle stress.

3. Delete current data for N03 in nozzle table in Zones H-3, H-2, & H-1 and replace with: 3", Sched 40S, Vacuum Breaker, "Z" DIM = N/A, REF DWG/DET = 24590-WTP-MV-M59T-00016001 REV. 3 DETAIL 2, CONN SIZE = N/A.

4. Add Note 21: 3" DIAMETER MALE PUREX CONNECTORS PER BNI DWG 24590-WTP-M61-P23T-00005 REV. 3 SHALL BE PROVIDED TO SELLER FOR N03. THE INSTALLATION OF THE PUREX CONNECTORS TO THE PIPE NOZZLES AND SUPPLY AND INSTALLATION OF THE KICK PLATES IS INCLUDED IN SELLER'S SCOPE OF WORK. NOZZLE N03 SHALL BE USED WITH ITEM 1 ON BNI DWG 24590-WTP-M61-P23T-00016 REV. 2 & THE 3" VERTICAL BLANK JUMPER ASSEMBLY ON BNI DWG 24590-WTP-P61-P27T-00010 REV. 0 WHICH ARE SHOWN FOR DIMENSIONAL GUIDANCE ONLY (THESE ITEMS WILL NOT BE SENT TO SELLER) WITH OVERALL DIMENSIONS SHOWN ON BNI DWG 24590-WTP-P61-P27T-00094 REV. 0. THE PROJECTED END OF THE PUREX CONNECTOR SHALL EXTEND 11" ABOVE THE CROWN OF THE TOP HEAD. SEE BNI SPEC #24590-WTP-3PS-MV00-T0001 FOR N03 NOZZLE LOADS.

5. Add the following Purex nozzle detail:

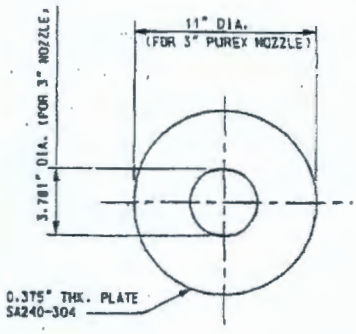

DETAIL
KICK PLATE

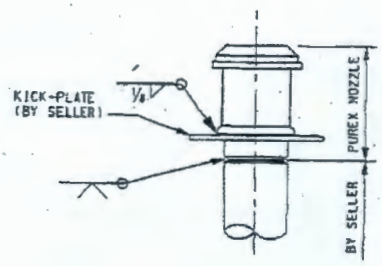

DETAIL
TYP. PUREX
NOZZLE DETAIL

Drawing Change Notice

CHANGE DOCUMENT NO. 24590-PTF-MVN-PJV-00005

JOB NO.	TITLE FOR CHANGE NOTICE
24590	Addition of 3" diameter Purex Connector as Vacuum Breaker

DESCRIPTION OF CHANGE:

Add the following to the table of reference Drawings in Zone B-1:

24590-WTP-M61-P23T-00005	3	WTP DETAILS - NOZZLES, PUREX MALE CONNECTOR 1", 2", 3", 4" (ECI)
24590-WTP-M61-P23T-00016	2	WTP DETAILS - CONECTOR BLOCKS, PUREX CONNECTOR 3" (ECI)
24590-WTP-P61-P27T-00010	0	WTP 3" VERTICAL BLANK JUMPER ASSEMBLY (ECI)
24590-WTP-P61-P27T-00094	0	WTP ASSEMBLY, VERTICAL BLANK PUREX CONNECTOR 3" (ECI)

ORIGINATOR	CHECKER
Ray Peters Ray Peters	Mike Seed MASeed

Reviews

E&NS GDH Gerry Hendrickx	MH JS Jarold Strickler	PD TAV Travis Vincent	MSCIE E. Stringer		

Approval(s) and Date

John Jolyfe 12/5/08			

Please note that source, special nuclear, and byproduct materials, as defined in the Atomic Energy Act of 1954 (AEA) are regulated at the U. S. Department of Energy (DOE) facilities exclusively by DOE acting pursuant to its AEA authority. DOE asserts that pursuant to AEA, it has sole and exclusive responsibility and authority to regulate source, special nuclear, and byproduct materials at DOE-owned nuclear facilities. Information contained herein on radionuclides is provided for process description purposes only.

Drawing Change Notice

CHANGE DOCUMENT NO.
24590-PTF-MVN-PJV-00006

R11013122

JOB NO.	TITLE FOR CHANGE NOTICE
24590	Vendor to confirm the required number of Acme studs for PJV Demister body flange & revision of ACME stud thread length

DESIGN DOCUMENT NUMBER	REV NO	TITLE OF DESIGN DOCUMENT
24590-PTF-MV-PJV-00002001	0	EQUIPMENT ASSEMBLY, PTF DEMISTER VESSEL, PJV-DMST-00002A/B/C, SHEET 1 OF 2

PART OF DESIGN CHANGE PACKAGE (DCP)? ☐ Yes ☒ No DCP No.: Rev:

JUSTIFICATION FOR CHANGE

The vendor shall confirm the number of Acme studs that are required for the vessel head flanges after analyzing the clamping requirements as good engineering design practice. The Acme thread length needs to be revised to 4-3/8" from 4" to account for head flange variance during fabrication.

TREND CODE-NUMBER

TBD

ISSUED BY
RPP-WTP PDC

Supersedes Change Document ☐ Yes ☒ No

ECN Needed ☐ Yes ☒ No

REQUIREMENTS REVIEW

Client Approval Required ☐ Yes ☒ No | Interface Resolution Required * ☐ Yes ☒ No

Address any "yes" answers in the description

DESCRIPTION OF CHANGE:

1. Delete Acme stud description in Zone F-8 and replace with, "Number of 1-1/4" Acme studs with remote nuts & nut cups to be confirmed by vendor."

ORIGINATOR	CHECKER
Ray Peters Ray Peters	Mike Seed MA Seed

Reviews

E+NS GOH Gerry Hendricks					

Approval(s) and Date

JLHoth 1/9/09			

Please note that source, special nuclear, and byproduct materials, as defined in the Atomic Energy Act of 1954 (AEA) are regulated at the U. S. Department of Energy (DOE) facilities exclusively by DOE acting pursuant to its AEA authority. DOE asserts that pursuant to AEA, it has sole and exclusive responsibility and authority to regulate source, special nuclear, and byproduct materials at DOE-owned nuclear facilities. Information contained herein on redionuclides is provided for process description purposes only.

R11105731

Drawing Change Notice

CHANGE DOCUMENT NO.
24590-PTF-MVN-PJV-00008

JOB NO.	TITLE FOR CHANGE NOTICE
24590	Change of Guide Pin Material

DESIGN DOCUMENT NUMBER	REV	DESIGN DOCUMENT NUMBER	REV
24590-PTF-MV-PJV-00002001	0		

PART OF DESIGN CHANGE PACKAGE (DCP)? ☐ Yes ☒ No DCP No.: Rev:

JUSTIFICATION FOR CHANGE	CAUSE CODE
The material called out on the drawing is a sulfur bearing stainless steel designed for machining. This material is not suited for welding & not listed in Section IX of the BPV Code.	11

Supersedes Change Document ☐ Yes ☒ No

ECN Needed ☐ Yes ☒ No

REQUIREMENTS REVIEW

Client Approval Required ☐ Yes ☒ No | Interface Resolution Required * ☐ Yes ☒ No

Address any "yes" answers in the description

DESCRIPTION OF CHANGE

1. Change to strain hardened ASME SA479 (UNS S21800) material from ASTM A582 Type 416 material in Zone C-3 for the short and long guide pins.

ISSUED BY
RPP-WTP PDC

ORIGINATOR	CHECKER
Ray Peters RM Peters	Jorge Cabello Jorge Cabello

Reviews

PEQ- Mike Seed MA Seed			

Approval(s)

PEQ- Jim Julyk			

Date *(inserted by final approver)*: 8/24/09

Please note that source, special nuclear, and byproduct materials, as defined in the Atomic Energy Act of 1954 (AEA) are regulated at the U. S. Department of Energy (DOE) facilities exclusively by DOE acting pursuant to its AEA authority. DOE asserts that pursuant to AEA, it has sole and exclusive responsibility and authority to regulate source, special nuclear, and byproduct materials at DOE-owned nuclear facilities. Information contained herein on radionuclides is provided for process description purposes only.

Please note that source, special nuclear, and byproduct materials, as defined in the Atomic Energy Act of 1954 (AEA) are regulated at the U. S. Department of Energy (DOE) facilities exclusively by DOE acting pursuant to its AEA authority. DOE asserts that pursuant to AEA, it has sole and exclusive responsibility and authority to regulate source, special nuclear, and byproduct materials at DOE-owned nuclear facilities. Information contained herein on radionuclides is provided for process description purposes only.

R11040900

Attachment to Section 2.6

ISSUED BY
RPP-WTP PDC

Supplier Deviation Disposition Request

PROJECT: River Protection Project Waste Treatment Plant JOB No.: 24590

FOR RPP-WTP USE		
RPP-WTP SDDR No.	Rev.	DATE RECEIVED
24590-WTP-SDDR-MS-09-00001	N/A	01/12/09

FOR SUPPLIER USE	
SUPPLIER SDDR No.	DATE SUBMITTED
001	1/12/09

1. Supplier Name	Address	City & State	Zip
JOSEPH OAT CORP.	2500 BROADWAY	CAMDEN, NJ	08104

2. Supplier's Order No.	3. RPP-WTP P.O. or SC	Rev
J2662A/B/C	24590-QL-POB-MVAD-00013	1

4. Deviation Description (Attach extra sheets, photographs, sketches, etc. as necessary and identify quantity and serial Numbers as applicable)

SEE ATTACHED SEPARATE SHEET

4a. Was an NCR issued? ☑ No ☐ Yes Number:

5. Supplier's Proposed Disposition: ☑ Use As-Is ☐ Repair ☐ Modify RPP-WTP Requirement

6. Supplier's Estimated Cost Impact: N/A 7. Supplier's Estimated Schedule Impact: N/A

8. Proposed Disposition and Technical Justification (plus Cost/Schedule if applicable): (Attach extra sheets, sketches, etc., as necessary.)

SEE ATTACHED SEPARATE SHEET

9. Supplier's Authorized Representative	Signature
Name: YINGZONG BU	
Title: PROJECT ENGINEER	Date: 12-11-2008

10. RPP-WTP Engineering Action ☒ Approved ☐ Disapproved ☐ See Below

Distribution: Acquisition Services Construction QA

NOTES:
1. Complete instructions provided at end of form.
2. Items 1 through 9 and 17 to be completed by Supplier
3. Items 10 through 16 and 18 to be completed by RPP-WTP. ** QA Signature required if a document that is signed by QA is affected.
4. Non applicable items to be marked "N/A"
5. Attach additional information whenever necessary
6. RPP-WTP must be notified within 5 days after detection of deviation
7. A copy of the completed SDDR form, with signatures in items 17 and 18, shall be included by the Supplier in the quality verification data package for each item to which this SDDR applies.

Supplier Deviation Disposition Request
Engineering Disposition

PROJECT: River Protection Project Waste Treatment Plant JOB NO.: 24590 SDDR: 24590-WTP-SDDR-MS-09-00001 Rev. NA

Title of SDDR: PJV DEMISTER / MISC. DESIGN CHANGES VESSELS

11. (OPTIONAL) RPP-WTP Provisional Disposition Statement (Attach extra sheets, sketches, etc., as necessary).

NA

RPP-WTP Provisional Disposition Justification (Attach extra sheets, sketches, etc., as necessary).

NA

ATS Number: 24590-WTP-ATS-QAIS- - NA

RPP-WTP Provisional Disposition Approval:

	Print/Type Name	Signature	Date
RE/Originator:	NA		
E&NS Review (when required):	NA		
Approver:	NA		

12. RPP-WTP Acquisition Services Action: Commercial Terms Impact:

☐ Yes *This SDDR grants relief from requirements or changes the requirements and; check each (consideration) item that applies:*

- ☐ Modifications to governing terms are required and/or;
- ☐ An increase in price is requested by Seller and/or;
- ☐ A price credit from the supplier is due and/or;
- ☐ An increase/decrease in the Seller promise delivery date is required.
- ☐ Cost impact, if any is subject to a separate approval process as required by the changes clause.

☒ No *This SDDR grants relief from requirements or changes the requirements and all of the following apply:*

- No commercial impact (No modification of governing commercial terms is required) and;
- No increase in price is requested by Seller and;
- No decrease in price is anticipated or required by Buyer and;
- No extension of promised shipment is required

NOTES:
1. Complete instructions provided at end of form.
2. Items 1 through 9 and 17 to be completed by Supplier
3. Items 10 through 16 and 18 to be completed by RPP-WTP.
4. Non applicable items to be marked "N/A"
5. Attach additional information whenever necessary
6. RPP-WTP must be notified within 5 days after detection of deviation
7. A copy of the completed SDDR form, with signatures in items 17 and 18, shall be included by the Supplier in the quality verification data package for each item to which this SDDR applies.

Supplier Deviation Disposition Request
Engineering Disposition

PROJECT: River Protection Project Waste Treatment Plant JOB NO.: 24590 SDDR: 24590-WTP-SDDR-MS-09-00001 Rev. NA

Title of SDDR: PJV DEMISTER VESSELS / MISC. DESIGN CHANGES

13. Part of DCP?	☐ Yes ☒ No	DCP Number:	Rev
14. ACA Needed?	☐ Yes ☒ No	ACA Number:	Rev

15. RPP-WTP Final Disposition Statement (Attach extra sheets, sketches, etc., as necessary).

See provisional disposition above. Is the final disposition the same as the provisional disposition? ☐ Yes ☐ No ☒ N/A

THE PROPOSED DISPOSITION IS ACCEPTABLE. THE FUNCTION OF THE VESSEL IS UNAFFECTED.

RPP-WTP Justification (Attach extra sheets, sketches, etc., as necessary).

THESE MODIFICATIONS PROVIDE MORE ACCURATE FIT-UP, ADDITIONAL STRENGTH, EASIER REMOTE ALIGNMENT, ADDITIONAL LENGTH TO ACCOMODATE COMPONENT THICKNESS, AND PROPER SEALING REQUIREMENTS AS REQUIRED BY THE SMD QUANTITY. CODES & STANDARDS CONTINUE TO BE MET.

REQUIREMENTS REVIEW

Client Approval Required*	☐ Yes ☒ No	E&NS Screening Required	☒ Yes ☐ No
Interface Resolution Required*	☐ Yes ☒ No		

*Address these "yes" answers in the RPP-WTP Disposition Statement (above).

Affected RPP-WTP Documents:

Enter N/A or identify by number and current revision the specifications, drawings (including data sheets and engineering lists), supplier documents provided to another supplier, material requisitions (changes to Technical Notes only), and commercial grade dedication documentation. For specifications and drawings (including supplier documents provided to another supplier), indicate how the change will be incorporated. Changes to MR Technical Notes and commercial grade dedication documents are incorporated by design change.

Document Number	Rev	Remarks	Incorporation by	
			Design Change	Reference
24590-PTF-MV-PJV-00002001	0		☒	☐
24590-PTF-MV-PJV-00002002	0		☒	☐
24590-~~PTF~~ WTP-MV-MS9T-00026	1		☐	☒

RP 2/11/09

NOTES:
1. Complete instructions provided at end of form.
2. Items 1 through 9 and 17 to be completed by Supplier
3. Items 10 through 16 and 18 to be completed by RPP-WTP.
4. Non applicable items to be marked "N/A"
5. Attach additional information whenever necessary
6. RPP-WTP must be notified within 5 days after detection of deviation
7. A copy of the completed SDDR form, with signatures in items 17 and 18, shall be included by the Supplier in the quality verification data package for each item to which this SDDR applies.

Supplier Deviation Disposition Request
Engineering Disposition

PROJECT: River Protection Project Waste Treatment Plant JOB NO.: 24590 SDDR: 24590-WTP-SDDR-MS-09-00001 Rev. NA

Title of SDDR: PJV DEMISTER VESSELS / MISC. DESIGN CHANGES

Affected Supplier Submittals:

Enter N/A or the supplier submittals that require resubmittal to incorporate the SDDR change (identify by RPP-WTP document number and revision).

Document Number	Rev	Document Number	Rev
~~NA~~ 24590-QL-POB-MVAO-00003-04-00003	00A		
RP 2/3/09			

Reference Documents:

Identify by number and revision, calculation, system description, or other documents that are referenced to this SDDR. Enter N/A if no document references are necessary.

Document Number	Rev	Document Number	Rev
NA			

16. RPP-WTP Disposition Approval:

	Print/Type Name	Signature	Date
RE/Originator:	RAY PETERS	RAY PETERS	2/3/09
Checker:	Mike Seed	M. A Seed	2/6/09
Reviewer:	JORGE CABELLO ~~JARROLD STRICKLER~~	Jorge Cabello ~~Jarrold Strickler~~	2/9/09 ~~2/11/09~~
E&NS Review (when required):	RAY PETERS FOR DICK CARLSTROM VIA EDR # 24590-WTP-EDR-MS-09-0004 REV 0		2/11/09
Acquisition Services Representative:	(MJ) 2-11-09 ~~[illegible]~~ Matthew Jackson	Matthew Jackson	2/11/09
Approver:	John Jukyk	John Jukyk	2/11/09

17. Supplier _____ _____ _____
Print/Type Supplier Representative Name and Position *Signature* *Date*

18. RPP-WTP Supplier Quality Representative _____ _____ _____
Print/Type Name *Signature* *Date*

NOTES:
1. Complete instructions provided at end of form.
2. Items 1 through 9 and 17 to be completed by Supplier
3. Items 10 through 16 and 18 to be completed by RPP-WTP.
4. Non applicable items to be marked "N/A"
5. Attach additional information whenever necessary
6. RPP-WTP must be notified within 5 days after detection of deviation
7. A copy of the completed SDDR form, with signatures in items 17 and 18, shall be included by the Supplier in the quality verification data package for each item to which this SDDR applies.

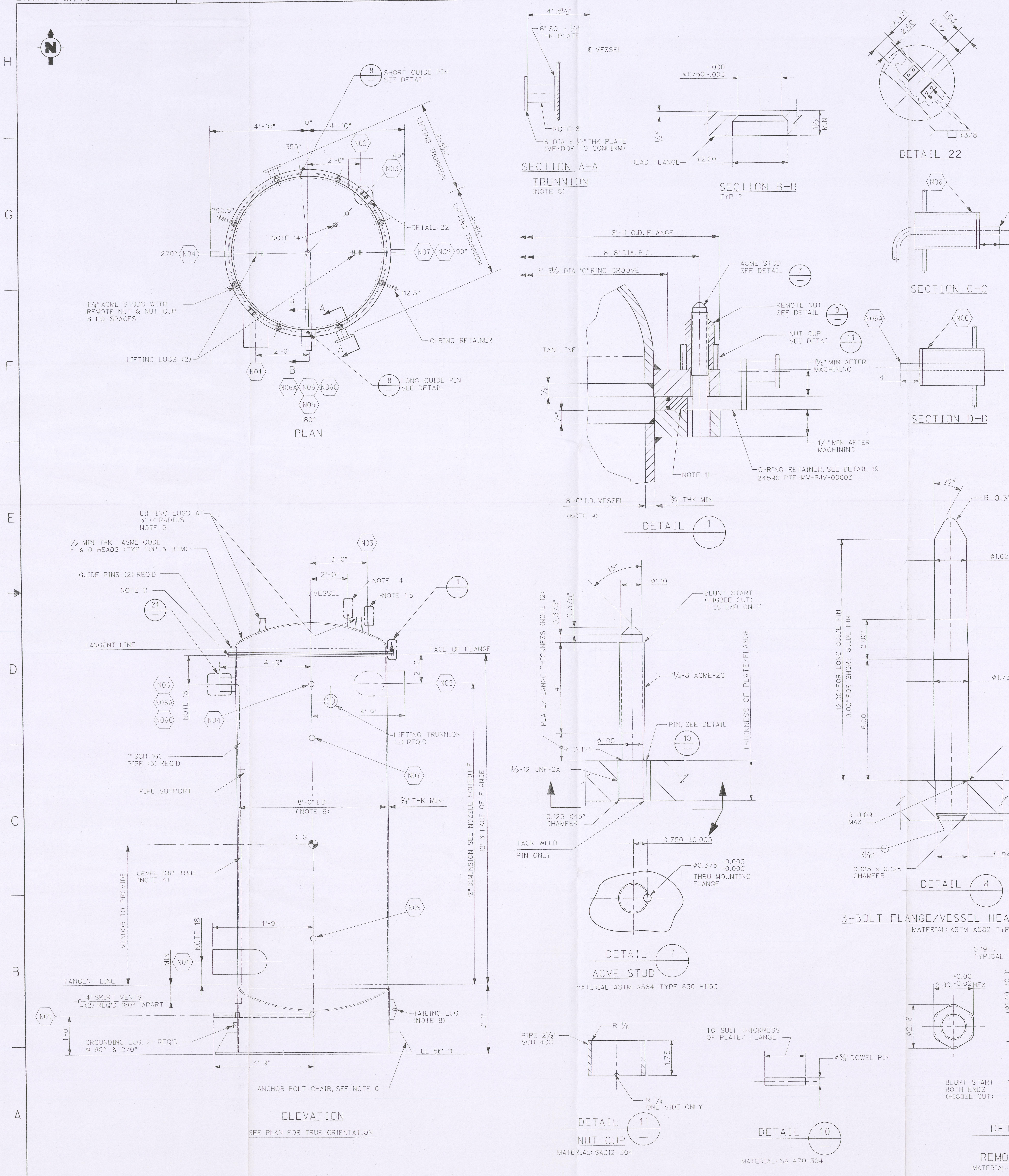

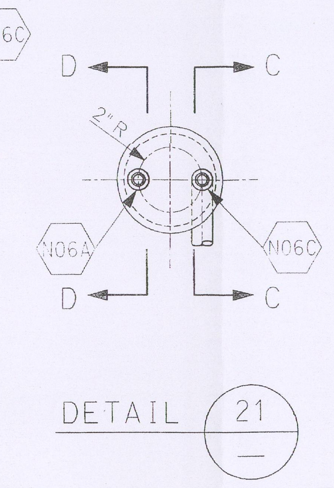

NOZZLE	SIZE	SCHED/WALL	SERVICE/REMARKS	"Z"DIM	REF DWG/DET	CONN PIPE SIZE/SCHED
N01	24"	⅝" PLATE	OFFGAS INLET	1'-6"	24590-WTP-MV-M59T-00016001 DET 1	24"- 0.250 NOM
N02	24"	⅝" PLATE	OFFGAS OUTLET	10'-6"	24590-WTP-MV-M59T-00016001 DET 1	24"- 0.250 NOM
N03	2"X3/4"	——	VENT	——	24590-WTP-MV-M59T-00016001 DET 6	N/A
N04	2"X1"	——	DEMIN WATER IN	10'-4½"	24590-WTP-MV-M59T-00016001 DET 7	1"- SCH 40
N05	3"	80S	DRAIN	-2'-1"	24590-WTP-MV-M59T-00016001 DET 1	3"- SCH 40
N06	6"	80S	INSTRUMENTATION	10'-2"	SEE DETAIL 21	6"- SCH 40
N06A	1"	160S	BALANCE	10'-2"	SEE DETAIL 21	1"- SCH 40
N06C	1"	160S	LEVEL	10'-2"	SEE DETAIL 21	1"- SCH 40
N07	2"X3/4"	80S	PDT	10'-4½"	24590-WTP-MV-M59T-00016001 DET 5	¾"- SCH 40
N09	2"X3/4"	80S	PDT	2'-9"	24590-WTP-MV-M59T-00016001 DET 5	¾"- SCH 40

GENERAL NOTES:

1. DELETED
2. DEMISTER ELEMENT SHALL HAVE OVERALL DIMENSIONS NOT TO EXCEED 9'-0" LONG X 20⅜" O.D.
3. THE DEMISTER ELEMENTS SHALL BE CAPABLE OF BEING REMOTELY DIS-ASSEMBLED. EACH SEGMENT SHALL HAVE DIMENSIONS NOT TO EXCEED 28" LONG X 20⅜" O.D., VENDOR TO DETERMINE THE NUMBER OF ELEMENTS.
4. LENGTH OF DIP TUBES, FOR BALANCE & LEVEL, TO BE DETERMINED DURING SELLER'S DETAILED DESIGN.
5. THE DEMISTER HEAD AND INTERNALS SHALL BE REMOTELY HANDLED. THE HEAD SHALL BE BALANCED FOR LIFTING. THE HEAD SHALL BE FLAT WITHIN ¼" WHEN LIFTED AND MEASURED AT THE OUTER EDGE OF THE FLANGE. WEIGHTS MAY BE REQUIRED TO BE ADDED TO THE HEAD TO MEET THIS REQUIREMENT.
6. SELLER SHALL DETERMINE ANCHOR CHAIR DESIGN, COMPLETE WITH ANCHOR BOLT NUMBER, LOCATION, SIZE AND BOLT CIRCLE DIAMETER, WITH A MINIMUM OF 8-1" ASTM F1554 GRADE 36 BOLTS. BUYER WILL PROVIDE ANCHOR BOLTS.
7. DELETED.
8. VENDOR TO DESIGN TAILING AND LIFTING LUGS. VENDOR HAS RESPONSIBILITY FOR FINAL SIZING.
9. MAXIMUM BOUNDING DIMENSION FOR VESSEL INSIDE DIAMETER IS 8'-0".
10. NOZZLES SHALL BE PREPARED FOR FIELD WELDING AS PER DRAWING 24590-WTP-PW-P30T-00001.
11. FLANGE FACE SURFACE FINISH TO BE IN ACCORDANCE WITH SEAL SUPPLIER RECOMMENDATIONS.
12. STUD THREADS SHALL EXTEND ⅜" BENEATH THE TOP OF THE LID FLANGE WHEN SEATED.
13. TWO SETS OF ALIGNMENT GUIDES WILL BE PROVIDED ON THE VESSEL FLANGE TO ORIENT THE O-RING RETAINER AND PREVENT THE O-RING COMPRESSION TABS FROM COVERING THE VESSEL FLANGE HOLES (SEE DETAIL 22).
14. PROVIDE ¾" φ PIPE STUB WITH MALE NPT THREADS & STAUBLI UNVALVED PLUG RBE 19.6204. THE PIPE STUB DOES NOT PENETRATE INTO THE HEAD. THE OUTLET TO THE UNVALVED PLUG SHALL BE 10" ABOVE THE VESSEL HEAD. THIS WILL BE USED FOR PLACING THE STAUBLI WITH CAP DURING MAINTENANCE.
15. PROVIDE ¾" φ PIPE STUB WITH MALE NPT THREADS & STAUBLI UNVALVED PLUG RBE 19.6204, STAUBLI SOCKET RBE 19.1254/IC/JE/OS/VD AND PIPE CAP, PIPE CAP TO BE TACK WELDED IN 2 PLACES TO SOCKET. A 3'-0" STAINLESS STEEL LANYARD WILL BE ATTACHED TO THE PIPE STUB AND TO THE STAUBLI SOCKET WITH PIPE CAP. THE OUTLET TO THE UNVALVED PLUG SHALL BE 10" ABOVE THE VESSEL HEAD.
16. THE STAUBLI SOCKET WITH CAP WILL BE SUPPLIED WITH STAINLESS STEEL TAGS ATTACHED TO THE LANYARDS WITH THE FOLLOWING VALVE NUMBERS:

DEMISTER No.	IN-LINE COMPONENT No.
PJV-DMST-00002A	PJV-SP-00013
PJV-DMST-00002B	PJV-SP-00014
PJV-DMST-00002C	PJV-SP-00015

17. GEOMETRIC TOLERANCING WILL BE USED TO LOCATE THE GUIDE PINS & STUDS FOR THE VESSEL AND HEAD FLANGES.
18. VENDOR TO PROVIDE.
19. THIS DRAWING SUPERSEDES 24590-PTF-MV-PJV-00002, REV C AND INCLUDES INFORMATION FROM 24590-PTF-MVN-PJV-00003.
20. THIS DRAWING IS DANGEROUS WASTE PERMIT AFFECTING.

Please note that source, special nuclear, and byproduct materials, as defined in the Atomic Energy Act of 1954 (AEA) are regulated at the U. S. Department of Energy (DOE) facilities exclusively by DOE acting pursuant to its AEA authority. DOE asserts that pursuant to AEA, it has sole and exclusive responsibility and authority to regulate source, special nuclear, and byproduct materials at DOE-owned nuclear facilities. Information contained herein on radionuclides is provided for process description purposes only.

THIS DRAWING TO BE READ IN CONJUNCTION WITH THE MECHANICAL DATA SHEET No. 24590-PTF-MVD-PJV-00004

DRAWING INDEX

DRAWING NUMBER	DRAWING TITLE
24590-PTF-MV-PJV-00002001	EQUIPMENT ASSEMBLY PTF DEMISTER VESSEL PJV-DMST-00002A/B/C SHEET 1 OF 2
24590-PTF-MV-PJV-00002002	EQUIPMENT ASSEMBLY PTF DEMISTER VESSEL PJV-DMST-00002A/B/C SHEET 2 OF 2

REFERENCE DRAWINGS

DWG NO	REV	TITLE
24590-WTP-MV-M59T-00001	4	PRESSURE VESSEL TOLERANCES STANDARD DETAILS
24590-WTP-MV-M59T-00016001	3	VESSEL CONNECTIONS STANDARD DETAILS SHT 1 OF 3
24590-WTP-MV-M59T-00018	3	VESSEL NAMEPLATE STANDARD DETAILS
24590-WTP-PW-P30T-00001	1	WTP END PREP DETAIL FOR FIELD BUTT WELDS
24590-WTP-MV-M59T-00026	1	ANCHOR BOLT CHAIR DETAILS FOR VERTICAL VESSELS
24590-WTP-MV-M59T-00012	1	GROUNDING LUG STANDARD DETAILS
24590-PTF-M6-PJV-00002	2	P&ID - PTF PULSE JET VENTILATION SYSTEM INLET HEADER TO DEMISTER OUTLET

REVISION HISTORY

REV	DESCRIPTION	ORG	CHKD	RVWD	APVD	DATE
0	ISSUED FOR PURCHASE, SEE NOTE 19	RPP	OHC	Ctf	JJ	8/6/08

Q

ISSUED BY WTP-RWP PDC

ISSUE STAMP

PROJECT No.	24590
SITE	HANFORD
AREA	200E
BUILDING No.	10

	BY	DATE
ORIGINATOR	RAY PETERS	7/6/08
CHECKER	[signature]	7/14/08
APPROVER	[signature]	8/6/08
REVIEWER	[signature]	15 Jul 08

BECHTEL

RIVER PROTECTION PROJECT
WASTE TREATMENT PLANT
2435 STEVENS CENTER PLACE
RICHLAND, WA 99354

CONTRACT No: DE-AC27-01RV14136

EQUIPMENT ASSEMBLY PTF DEMISTER VESSEL PJV-DMST-00002A/B/C SHEET 1 OF 2

CONTENT APPLICABLE TO ALARA? [XX] YES [ ] NO
ADR NO. 24590-WTP-ADR-M-03-008 REV: 1 RP 8/6/08
SAFETY SCREEN REQUIRED? [ ] YES [X] NO E&NS INITIAL IF YES ____

SCALE: NTS

24590-PTF-MV-PJV-00002001

REV 0

SAFETY SCREEN IS REQUIRED FOR DRAWING TYPES IDENTIFIED IN 24590-WTP-GPP-SREG-002

E SIZE - 44x34
COMPUTER GENERATED - MANUAL CHANGES NOT PERMITTED

R10934084

07/03/2008 04:53:42 PM

PLOTTED BY: jrwilli3

J2662 SDDR-001 Attachment for the Deviation Description and Proposed Disposition and Technical Justification:

1 Body Flange Joint to Shell

1) Deviation Description:
The body flange design called out in BNI drawing 24590-PTF-MV-PJV-00002001 Rev.0 "Detail 1" in zone E-5 and F-5, is changed to full penetration on the I.D side and additional full NDE of this weld compared to the original design. See attached sketch of SDDR001-sk-01 for details.

2) Proposed Disposition and Technical Justification:
Proposed disposition is "Use-as-is". The body flange configuration is in accordance with Appendix Y of ASME section VIII, Div 1. The proposed alternate body flange design improves the ID weld from fillet to full penetration weld with NDE test; the new flange ID line up with the shell ID without changing the original flange outside diameter or the bolt circle and seal ring location.

2 Skirt Base Plate Thickness

1) Deviation Description:
The skirt base plate type 2a, called out in BNI drawing 24590-WTP-MV-M59T-00026 Rev.1 zone C-6, is changed from 5/8" thick to 3/4" thick.

2) Proposed Disposition and Technical Justification:
Proposed disposition is "Use-as-is". The proposed base plate thickness provides additional strength to the vessel support without affecting the vessel overall dimensions.

3 Upper Body Flange Dowel Pin Hole Size

1) Deviation Description:
The upper body flange Dowel pin hole top diameter, in BNI drawing 24590-PTF-MV-PJV-00002001 Rev.0 "Section B-B" in zone G-5 and H-5, is changed from 1.760" to 1.790"±0.005". See attached sketch of SDDR001-sk-03 for details.

2) Proposed Disposition and Technical Justification:
Proposed disposition is "Use-as-is". The proposed new diameter does not affect the alignment of the top head assembly to the lower shell section of the vessel, nor any impact to the internal demister assemblies.

24590-WTP-SDDR-MS-09-00001
REV NA
5/10

4 Body Flange ACME Stud Length

1) Deviation Description:
The ACME stud upper thread section length, called out in BNI drawing 24590-PTF-MV-PJV-00002001 Rev.0 "Detail 7" in zone D-5, is changed from 4" to 4-3/8" compared to the original design.

2) Proposed Disposition and Technical Justification:
Proposed disposition is "Use-as-is". The proposed longer upper thread section is to accommodate the increased Retainer Ring thickness (see item 5 below in this SDDR) and any reasonable extra thickness of the body flange beyond the specified minimum thickness (no maximum thickness specified).

5 Retainer Ring

1) Deviation Description:
The Retainer Ring design in BNI drawing 24590-PTF-MV-PJV-00002002 Rev.0 is changed from 1" thick and 2.5" wide to 1-1/4" thick and 3"wide. The spacer block is changed from quantity of 6 to 14 because of the body flange stud quantity change and the thickness is change from 1" thick to 1-1/4" thick as well. See attached sketch of SDDR001-sk-05 for details.

2) Proposed Disposition and Technical Justification:
Proposed disposition is "Use-as-is". The proposed new thickness and width of the retainer ring will meet the sealing O-ring requirements and line the top head and lower shell ID better. The increased thickness and quantity of the spacer blocks will suit to the ACME stud quantity change and the Retainer Ring thickness change.

Sketches attached on separate sheets.

24590-WTP-SDDR-MS-09-00001
REV NA
6/10

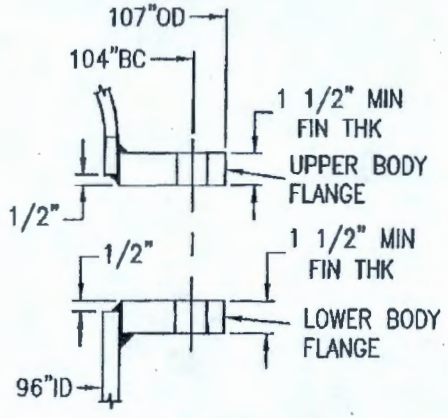

BODY FLANGES

PER BNI DWG 24590-PTF-MV-PJV-00002001 REV. 0
DETAIL 1

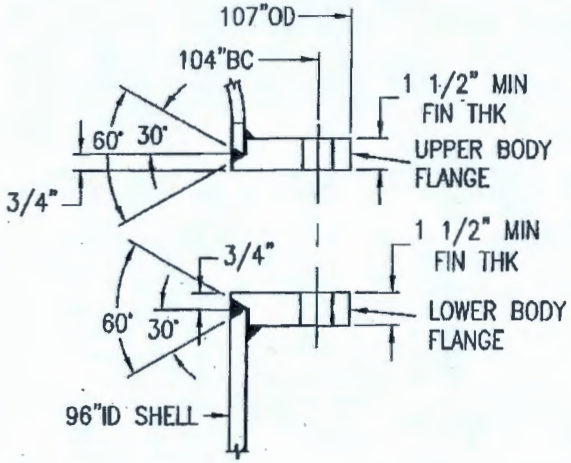

PROPOSED BODY FLANGES

24590-WTP-SDDR-MS-09-00001
REV NA
7/10

JOSEPH OAT CORPORATION 2500 BROADWAY CAMDEN, N.J.	
JOB No: J-2662-A/B/C	SDDR: SDDR001
ENG:	DATE:
DRAWN: PJH	DATE: 12/11/08
SK. No: SDDR001-SK-01	REV: 0

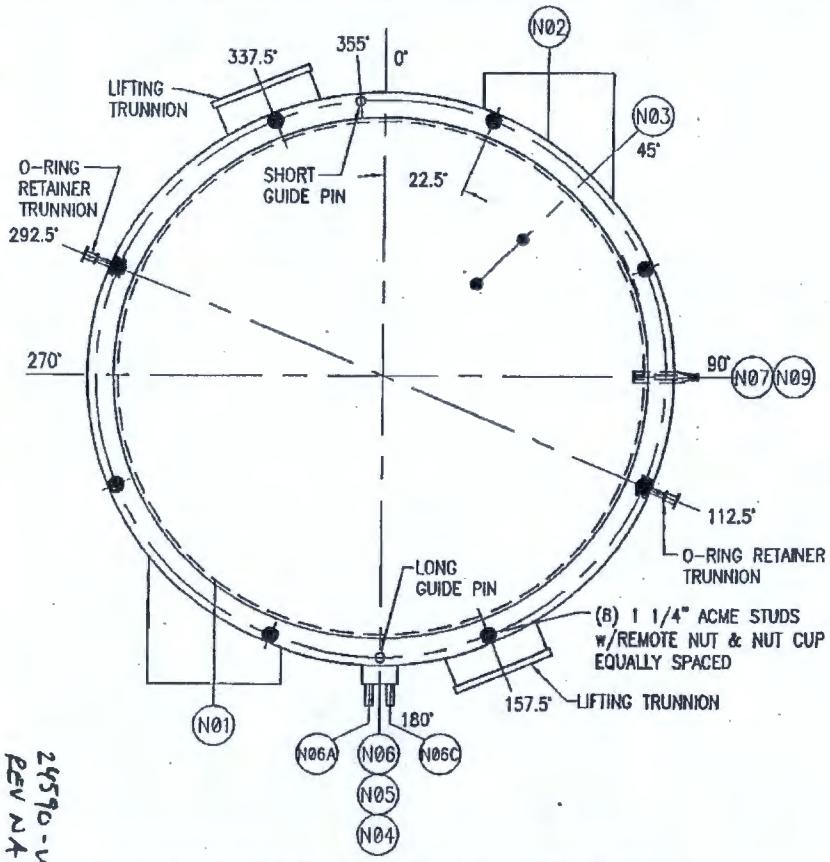

BODY FLANGE STUD ARRANGEMENT

PER BNI DWG. 24590-PTF-MV-PJV-00002001 REV.0

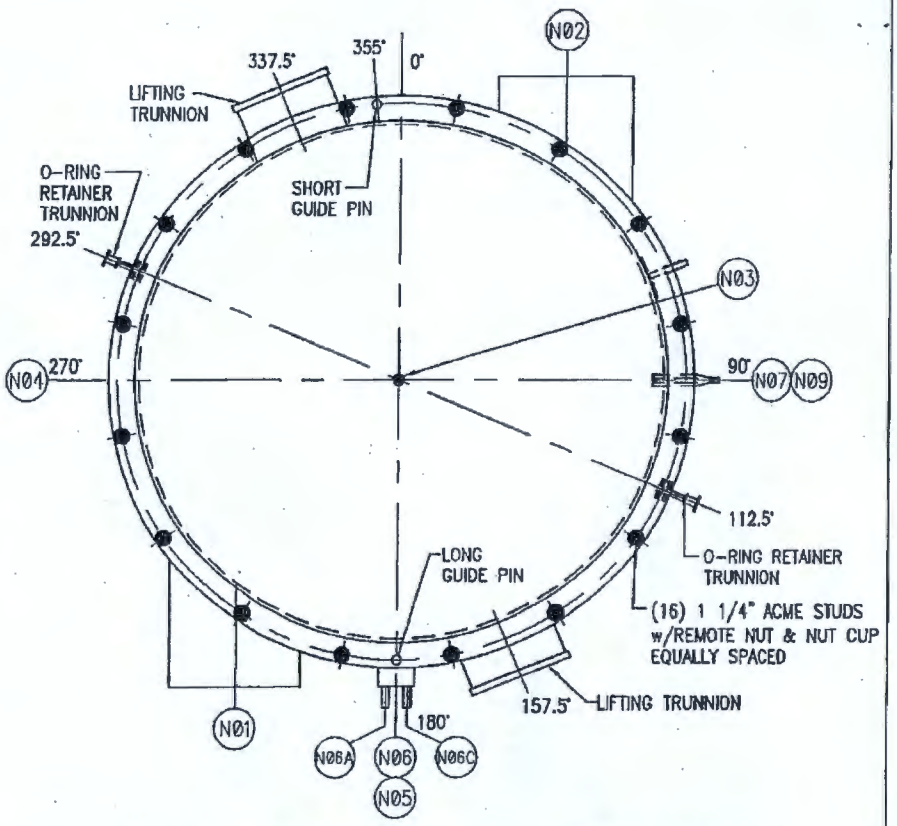

PROPOSED BODY FLANGE STUD ARRANGEMENT

24590-WTP-SDDR-MS-09-00001
REV NA
8/10

JOSEPH OAT CORPORATION 2500 BROADWAY CAMDEN, N.J.	
JOB No: J-2662-A/B/C	SDDR: SDDR001
ENG:	DATE:
DRAWN: PJH	DATE: 12/11/08
SK. No: SDDR001-SK-02	REV: 0

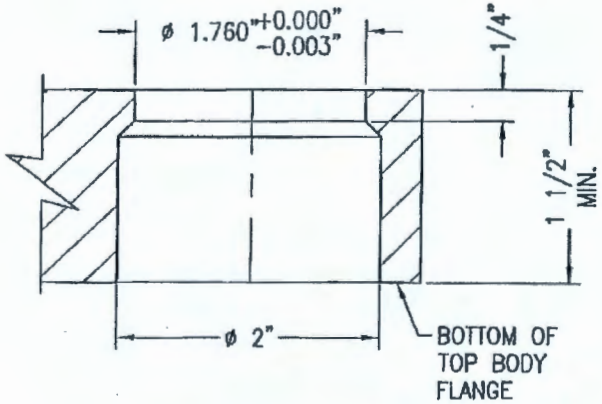

GUIDE PIN HOLE

PER BNI DWG. 24590-PTF-MV-PJV-00002001 REV.0
SECTION B-B

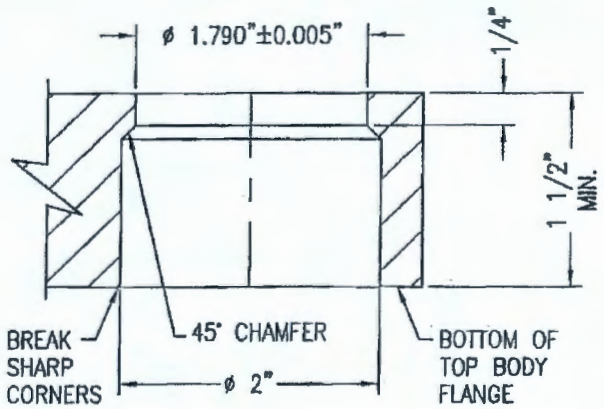

PROPOSED GUIDE PIN HOLE

(IN UPPER BODY FLANGE)

24590-WTP-SDDR-MF-09-00001
Rev 04
9/10

JOSEPH OAT CORPORATION 2500 BROADWAY CAMDEN, N.J.	
JOB No: J-2662-A/B/C	SDDR: SDDR001
ENG:	DATE:
DRAWN: PJH	DATE: 12/11/08
SK. No: SDDR001-SK-03	REV: 0

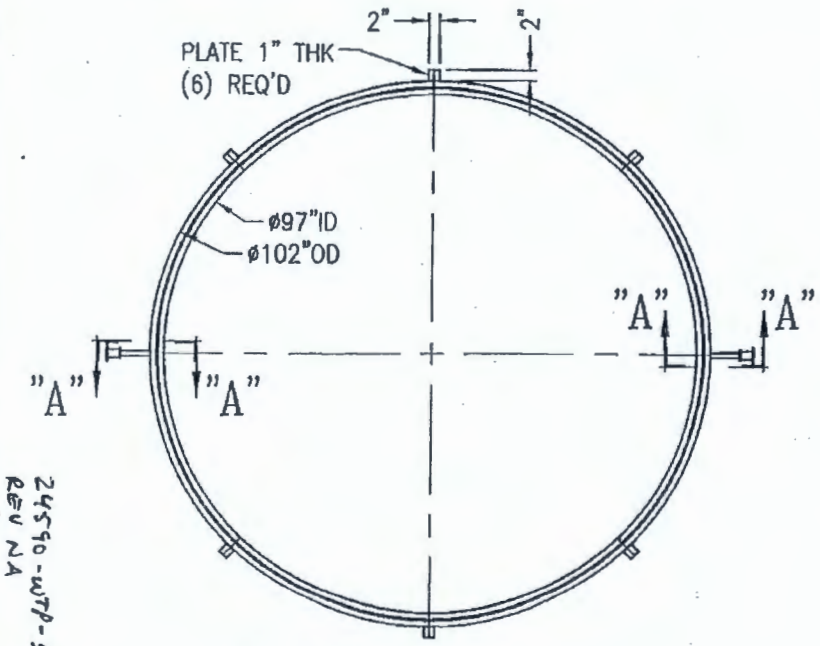

O-RING RETAINER

PER BNI DWG. 24590-PTF-MV-PJV-00002002 REV.0
PLAN & DETAIL 19

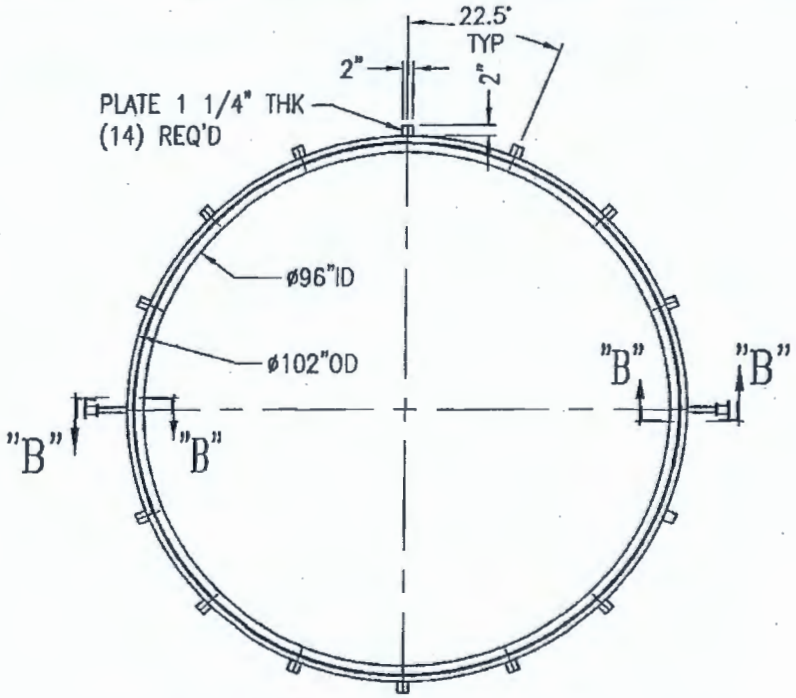

PROPOSED O-RING RETAINER

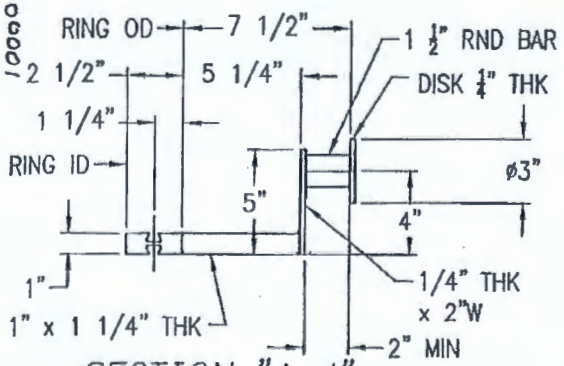

SECTION "A-A"

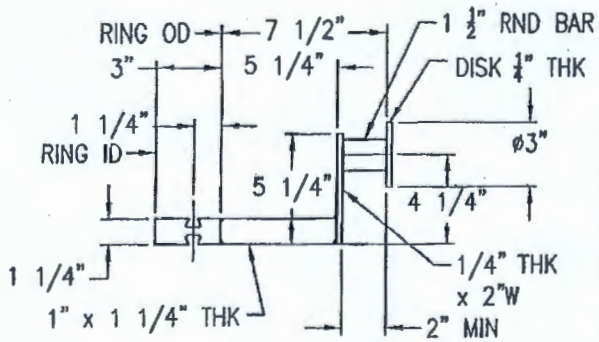

SECTION "B-B"

JOSEPH OAT CORPORATION 2500 BROADWAY CAMDEN, N.J.	
JOB No: J-2662-A/B/C	SDDR: SDDR001
ENG:	DATE:
DRAWN: PJH	DATE: 12/11/08
SK. No: SDDR001-SK-05	REV: 0

24590-WTP-SDDR-MS-09-00001
REV NA
10/10

Please note that source, special nuclear, and byproduct materials, as defined in the Atomic Energy Act of 1954 (AEA) are regulated at the U. S. Department of Energy (DOE) facilities exclusively by DOE acting pursuant to its AEA authority. DOE asserts that pursuant to AEA, it has sole and exclusive responsibility and authority to regulate source, special nuclear, and byproduct materials at DOE-owned nuclear facilities. Information contained herein on radionuclides is provided for process description purposes only.

ISSUED BY
RPP-WTP PDC

R11225872

Attachment to Section 2.6

Supplier Deviation Disposition Request

PROJECT: River Protection Project Waste Treatment Plant JOB No.: 24590

FOR RPP-WTP USE		
RPP-WTP SDDR No.	Rev.	DATE RECEIVED
24590-WTP-SDDR-MS-10-00047	N/A	04/21/10

FOR SUPPLIER USE	
SUPPLIER SDDR No.	DATE SUBMITTED
008	4-16-2010

1. Supplier Name	Address	City & State:	Zip
JOSEPH OAT CORP.	2500 BROADWAY	CAMDEN, NJ	08104

2. Supplier's Order No.	3. RPP-WTP P.O. or SC	Rev
J2662 A/B/C	24590-QL-POB-MVA0-00013	1

4. Deviation Description (Attach extra sheets, photographs, sketches, etc. as necessary and identify quantity and serial Numbers as applicable)

SEE ATTACHED SEPARATE SHEET

4a. Was an NCR issued? ☑ No ☐ Yes Number:

5. Supplier's Proposed Disposition: ☑ Use As-Is ☐ Repair ☐ Modify RPP-WTP Requirement

6. Supplier's Estimated Cost Impact: N/A 7. Supplier's Estimated Schedule Impact: N/A

8. Proposed Disposition and Technical Justification (plus Cost/Schedule if applicable): (Attach extra sheets, sketches, etc., as necessary.)

SEE ATTACHED SEPARATE SHEET

9. Supplier's Authorized Representative	Signature
Name: YINGZONG BU	
Title: PROJECT ENGINEER	Date: 4-16-2010

10. RPP-WTP Engineering Action ☒ Approved ☐ Disapproved ☐ See Below

Distribution: Acquisition Services Construction QA

NOTES:
1. Complete instructions provided at end of form.
2. Items 1 through 9 and 17 to be completed by Supplier
3. Items 10 through 16 and 18 to be completed by RPP-WTP. ** QA Signature required if a document that is signed by QA is affected.
4. Non applicable items to be marked "N/A"
5. Attach additional information whenever necessary
6. RPP-WTP must be notified within 5 days after detection of deviation
7. A copy of the completed SDDR form, with signatures in items 17 and 18, shall be included by the Supplier in the quality verification data package for each item to which this SDDR applies.

J2662 SDDR-008 Attachment for the Deviation Description and Proposed Disposition and Technical Justification:

4. Deviation Description:
   The nozzle N04 orientation called out in BNI drawing 24590-PTF-MV-PJV-00002001 Rev.0 "Plan" view in zone "F-7" is changed from 270° to 246°.

8. Proposed Disposition and Technical Justification:
   Proposed disposition is "Use-as-is". The nozzle N04 piping connection has not been finalized and therefore can be laid out in accordance with the 246° orientation.

Supplier Deviation Disposition Request
Engineering Disposition

PROJECT: River Protection Project Waste Treatment Plant **JOB NO.:** 24590 **SDDR:** 24590-WTP-SDDR-MS-10-00047 **Rev.** NA

Title of SDDR: PJV DEMISTER VESSEL - N04 NOZZLE ORIENTATION

11. (OPTIONAL) RPP-WTP Provisional Disposition Statement (Attach extra sheets, sketches, etc., as necessary).

NA

RPP-WTP Provisional Disposition Justification (Attach extra sheets, sketches, etc., as necessary).

NA

ATS Number: 24590-WTP-ATS-QAIS- -

RPP-WTP Provisional Disposition Approval:

	Print/Type Name	Signature	Date
RE/Originator:	NA		
E&NS Review (when required):	NA		
Approver:	NA		

12. RPP-WTP Procurement and Subcontracts Action: Commercial Terms Impact:

☐ Yes *This SDDR grants relief from requirements or changes the requirements and; check each (consideration) item that applies:*

- ☐ Modifications to governing terms are required and/or;
- ☐ An increase in price is requested by Seller and/or;
- ☐ A price credit from the supplier is due and/or;
- ☐ An increase/decrease in the Seller promise delivery date is required.
- ☐ Cost impact, if any is subject to a separate approval process as required by the changes clause.

☒ No *This SDDR grants relief from requirements or changes the requirements and all of the following apply:*

- No commercial impact (No modification of governing commercial terms is required) and;
- No increase in price is requested by Seller and;
- No decrease in price is anticipated or required by Buyer and;
- No extension of promised shipment is required

NOTES:

1. Complete instructions provided at end of form.
2. Items 1 through 9 and 17 to be completed by Supplier
3. Items 10 through 16 and 18 to be completed by RPP-WTP.
4. Non applicable items to be marked "N/A"
5. Attach additional information whenever necessary
6. RPP-WTP must be notified within 5 days after detection of deviation
7. A copy of the completed SDDR form, with signatures in items 17 and 18, shall be included by the Supplier in the quality verification data package for each item to which this SDDR applies.

Supplier Deviation Disposition Request
Engineering Disposition

PROJECT: River Protection Project Waste Treatment Plant JOB NO.: 24590 SDDR: 24590-WTP-SDDR-MS-10-00047 Rev. NA

Title of SDDR: PJV DEMISTER VESSEL - NO4 NOZZLE ORIENTATION

13. Part of DCP?	☐ Yes ☒ No	DCP Number:	Rev
14. ACA Needed?	☐ Yes ☒ No	ACA Number:	Rev

15. RPP-WTP Final Disposition Statement (Attach extra sheets, sketches, etc., as necessary).

See provisional disposition above. Is the final disposition the same as the provisional disposition? ☐ Yes ☐ No ☒ N/A

ACCEPT NO4 ORIENTATION OF 246°.

RPP-WTP Justification (Attach extra sheets, sketches, etc., as necessary).

ORIENTATION IS ACCEPTABLE TO PLANT DESIGN.

REQUIREMENTS REVIEW

Client Approval Required*	☐ Yes ☒ No	E&NS Screening Required	☐ Yes ☒ No
Interface Resolution Required*	☐ Yes ☒ No		

*Address these "yes" answers in the RPP-WTP Disposition Statement (above).

Affected RPP-WTP Documents:

Enter N/A or identify by number and current revision the specifications, drawings (including data sheets and engineering lists), supplier documents provided to another supplier, material requisitions (changes to Technical Notes only), and commercial grade dedication documentation. For specifications and drawings (including supplier documents provided to another supplier), indicate how the change will be incorporated. Changes to MR Technical Notes and commercial grade dedication documents are incorporated by design change. NOTE: When incorporation by design change is necessary for documents that are referenced by more than one procurement, see the SDDR Instructions for additional considerations.

Document Number	Rev	Remarks	Incorporation by	
			Design Change	Reference
24590-WTP-SDDR-MS-10-00029	NA	THIS SDDR IS SUPERSEDED.	☐	☒
24590-PTF-MV-PJV-~~0002001~~	0		☒	☐
00002001			☐	☐

JM 6/29/10

NOTES:

1. Complete instructions provided at end of form.
2. Items 1 through 9 and 17 to be completed by Supplier
3. Items 10 through 16 and 18 to be completed by RPP-WTP.
4. Non applicable items to be marked "N/A"
5. Attach additional information whenever necessary
6. RPP-WTP must be notified within 5 days after detection of deviation
7. A copy of the completed SDDR form, with signatures in items 17 and 18, shall be included by the Supplier in the quality verification data package for each item to which this SDDR applies.

Supplier Deviation Disposition Request
Engineering Disposition

PROJECT: River Protection Project Waste Treatment Plant JOB NO.: 24590 SDDR: 24590-WTP-SDDR-MS-10-00047 Rev. NA

Title of SDDR: PJV DEMISTER VESSEL - NO4 NOZZLE ORIENTATION

Affected Supplier Submittals:

Enter N/A or the supplier submittals that require resubmittal to incorporate the SDDR change (identify by RPP-WTP document number and revision).

Document Number	Rev	Document Number	Rev
24590-QL-POB-MVA0-00013-04-00004	00D		

Reference Documents:

Identify by number and revision, calculation, system description, or other documents that are referenced to this SDDR. Enter N/A if no document references are necessary.

Document Number	Rev	Document Number	Rev
NA			

16. RPP-WTP Disposition Approval:

	Print/Type Name	Signature	Date
RE/Originator:	RAY PETERS	RAY PETERS MS	6/15/10
Checker:	Jim MARSH	Jim Marsh	6/15/10
Reviewer(s):	Jim McGRATH	[illegible]	6/16/10
E&NS Review (when required):	NA		
Procurement and Subcontracts Representative:	Mack L. Stanley	Mack Stanley	6/21/10
Approver(s):	John Julyk JULYK	John Julyk	6/23/10

17. Supplier _____ _____ _____
Print/Type Supplier Representative Name and Position *Signature* *Date*

18. RPP-WTP Supplier Quality Representative _____ _____ _____
Print/Type Name *Signature* *Date*

NOTES:
1. Complete instructions provided at end of form.
2. Items 1 through 9 and 17 to be completed by Supplier
3. Items 10 through 16 and 18 to be completed by RPP-WTP.
4. Non applicable items to be marked "N/A"
5. Attach additional information whenever necessary
6. RPP-WTP must be notified within 5 days after detection of deviation
7. A copy of the completed SDDR form, with signatures in items 17 and 18, shall be included by the Supplier in the quality verification data package for each item to which this SDDR applies.

Drawing Change Notice

CHANGE DOCUMENT NO.
24590-PTF-MVN-PJV-00007

R11013123

JOB NO.	TITLE FOR CHANGE NOTICE
24590	Clarification of pin length for lifting ear of O-ring retainer, O-ring groove location, & plate size.

DESIGN DOCUMENT NUMBER	REV NO	TITLE OF DESIGN DOCUMENT
24590-PTF-MV-PJV-00002002	0	EQUIPMENT ASSEMBLY, PTF DEMISTER VESSEL, PJV-DMST-00002A/B/C, SHEET 2 OF 2

PART OF DESIGN CHANGE PACKAGE (DCP)? ☐ Yes ☒ No DCP No.: Rev:

JUSTIFICATION FOR CHANGE	TREND CODE-NUMBER	ISSUED BY
These changes clarify conflicting information shown on the BNI assembly drawing.	NA	RPP-WTP PDC

Supersedes Change Document ☐ Yes ☒ No

ECN Needed ☐ Yes ☒ No

REQUIREMENTS REVIEW

Client Approval Required ☐ Yes ☒ No | Interface Resolution Required * ☐ Yes ☒ No

Address any "yes" answers in the description

DESCRIPTION OF CHANGE:

1. Show the pin length as 2" minimum in Zone H-3 to agree with Zone E-6.
2. Redraw the double-ended arrow to correctly show the location of the O-ring groove in Zone F-7.
3. Revise plate to 1/4" THK x 2" x 5-1/4" from 1/4" THK x 2" x 3-1/2" in Zone G-4.

ORIGINATOR	CHECKER
Ray Peters Ray Peters	Mike Seed MA Seed

Reviews

E&NS GDH Gerry Hendricks					

Approval(s) and Date

[illegible] 1/9/09			

Please note that source, special nuclear, and byproduct materials, as defined in the Atomic Energy Act of 1954 (AEA) are regulated at the U. S. Department of Energy (DOE) facilities exclusively by DOE acting pursuant to its AEA authority. DOE asserts that pursuant to AEA, it has sole and exclusive responsibility and authority to regulate source, special nuclear, and byproduct materials at DOE-owned nuclear facilities. Information contained herein on radionuclides is provided for process description purposes only.

24590-PTF-MV-PJV-00002002

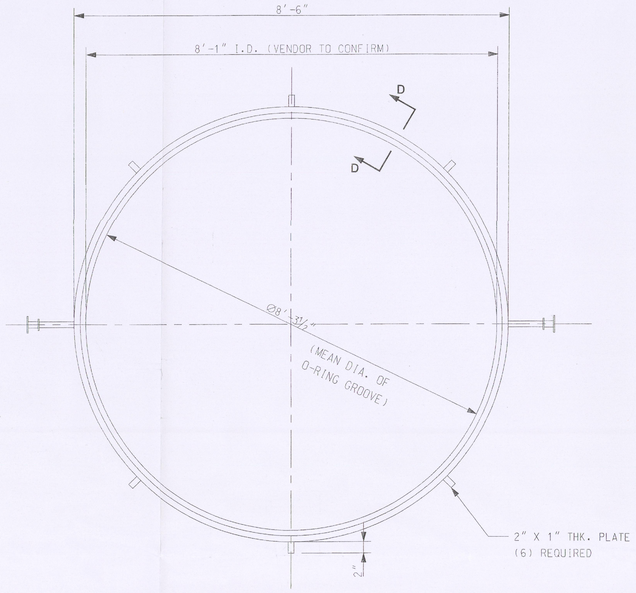

PLAN

ELEVATION

DETAIL 19

O-RING RETAINER

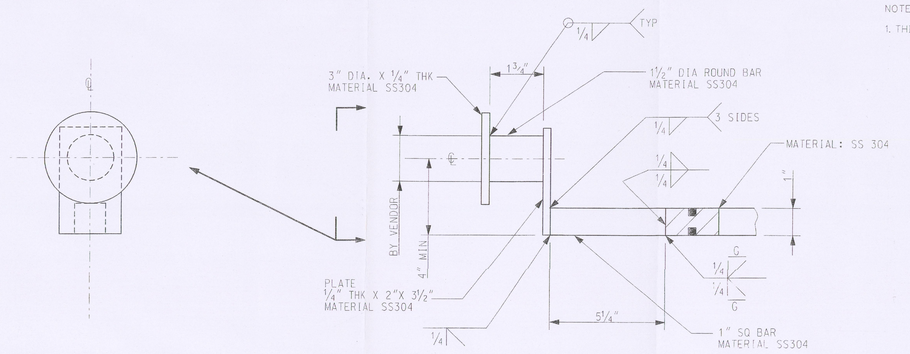

DETAIL 20

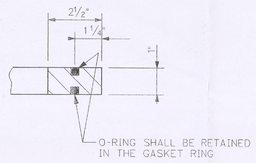

SECTION D-D

NOTE:

1. THIS DRAWING SUPERSEDES 24590-PTF-MV-PJV-00003, REV C.

Please note that source, special nuclear, and byproduct materials, as defined in the Atomic Energy Act of 1954 (AEA) are regulated by the U.S. Department of Energy (DOE) Headquarters exclusively by DOE acting pursuant to its AEA authority. DOE asserts that pursuant to AEA, it has sole and exclusive regulatory authority to regulate source, special nuclear, and byproduct materials at DOE-owned nuclear facilities. Information contained herein regulatory-other is provided for process description purposes only.

REV	DESCRIPTION	ORG	CHKD	RVWD	APVD	DATE
Q						
0	ISSUED FOR PURCHASE, SEE NOTE 1	RAP	DJC	CJS	JH	8/6/08

REVISION HISTORY

ISSUED BY	PROJECT No.	24590
	SITE	HANFORD
	AREA	200E
ISSUE STAMP	BUILDING No.	10

	BY	DATE
ORIGINATOR	RAY PETERS	7/16/08
CHECKER	DJC	7/16/08
APPROVER	JL Stokes	8/6/08
REVIEWER	Cornelius Stokes	15 Jul 08

CONTENT APPLICABLE TO ALARA? [XX] YES [ ] NO
ADR NO. 24590-WTP-ADR-M-03-008 REV. 2 8/5/08
SAFETY SCREEN REQUIRED? [ ] YES [X] NO EMAS INITIAL IF YES

BECHTEL

RIVER PROTECTION PROJECT
WASTE TREATMENT PLANT
2435 STEVENS CENTER PLACE
RICHLAND, WA 99354

CONTRACT No: DE-AC27-01RV14136

EQUIPMENT ASSEMBLY
PTF DEMISTER VESSEL
PJV-DMST-00002A/B/C
SHEET 2 OF 2

SCALE: NONE

24590-PTF-MV-PJV-00002002

REV 0

SAFETY SCREEN IS REQUIRED FOR DRAWING TYPES IDENTIFIED IN 24590-WTP-GPP-SREQ-002

'E' SIZE - 44x34
COMPUTER GENERATED - MANUAL CHANGES NOT PERMITTED

07/03/2008 04:56:09 PM

FORM K_SDNJDCN 02/2003

PLOTTED BY: jmab3

BECHTEL	**MECHANICAL DATA SHEET: DEMISTER**	**PLANT ITEM No.** ***24590-PTF-MV-PJV-DMST-00002A/B/C***

Project:	***RPP-WTP***	P&ID:	***24590-PTF-M6-PJV-00002***
Project No:	***24590***	Mechanical Systems Calculation: ISSUED BY RPP-WTP PDC	***24590-PTF-MKC-PJV-00001,*** ***24590-PTF-MKE-PJV-00003***
Project Site:	***Hanford***	Vessel Drawing	***24590-PTF-MV-PJV-00002/00003***
Description:	***PJV Demister***		

R10925194

Reference Data

Charge Vessels (Tag Numbers)	***None***
Pulsejet Mixers / Agitators (Tag Numbers)	***None***
RFDs/Pumps (Tag Numbers)	***None***

Design Data

Quality Level		***Q For Vessel, Note 4***	Fabrication Specs	***24590-WTP-3PS-MV00-T0001 (Note 9)***		
Design Level		***See Note 4***	Design Code	***ASME VIII Div 1***		
Seismic Category		***SC-I (Note 4)***	Code Stamp	***Yes***		
Service/Contents		***Radioactive Mist and Particulate***	NB Registration	***Yes***		
Design Specific Gravity		***1.00***				
Maximum Operating Volume	gal	***0***	Weights (lbs)	Empty	Operating	Test
Total Volume	gal	*	Estimated	***38000***	***38000***	***58000***
Radiography		***100% (Note 3)***	Actual *			
Environmental Qualifications		***See Attachment 1***				
Dangerous Waste Permit Affecting		***Yes***				

Inside Diameter	inch	***96 Max** *			Wind Design	***Not Required***	
Height (TL-Flange Face)	inch	***150 Max** *			Snow Design	***Not Required***	
		Max. Vessel Operating	Vessel Design	Coil/Jacket Design	Seismic Design	***24590-WTP-3PS-SS90-T0001*** ***24590-WTP-3PS-MV00-T0002***	
Internal Pressure	psig	***0***	***15***	***NA***	Seismic Base Moment *	ft*lb	
External Pressure	psig	***1.3 (Note 10)***	***FV***	***NA***	Postweld Heat Treat	***Not Required***	
Temperature	°F	***115***	***140***	***NA***	Corrosion Allowance	inch	***0.04***
Min. Design Metal Temp.	°F	***40***			Hydrostatic Test Pressure *	psig	
Relative Humidity	%	***100***					

Materials of Construction

Component	Material	Minimum Thickness / Size	Containment
Top Head	***SA 240 304 (Note 1)***	***See Drawing***	***Primary***
Shell	***SA 240 304 (Note 1)***	***See Drawing***	***Primary***
Bottom Head	***SA 240 304 (Note 1)***	***See Drawing***	***Primary***
Support	***SA 240 304 (Note 1)***	**	***NA***
Jacket/Coils/Half-Pipe Jacket	***NA***	***NA***	***NA***
Internals	***SA 240 304 (Note 1)***	***See Drawing***	***NA***
Pipe	***SA 312 304 (Note 1)***	***See Drawing***	***Primary***
Forgings/ Bar stock	***SA 182 304 (Note 1)***	***See Drawing***	***N/A***
Gaskets/O Ring	***EPDM/ See Drawing***	***NA***	***NA***
Bolting	***See Drawing***	***N/A***	***N/A***

BECHTEL	**MECHANICAL DATA SHEET: DEMISTER**	**PLANT ITEM No.** ***24590-PTF-MV-PJV-DMST-00002A/B/C***

Miscellaneous Data

Orientation	***Vertical***	Support Type	***Skirt***
Insulation Function	***NA***	Insulation Material	***NA***
Insulation Thickness (inch)	***NA***	External Finish	***NA***

Remarks

**** To be confirmed by Seller.***

Note 1: ***Material shall have carbon content of 0.030% max. dual certified. Non-welded specialty items are excluded.***

Note 2: ***Vessel volumes are approximate and do not account for manufacturing tolerances, nozzles, and displacement of internals.***

Note 3: ***These vessels are located in the PT filter cave and are not designed to be replaceable during the life of the PT facility.***

Note 4: ***The vendor shall meet NDE requirements for L-1 vessels in Section 6 of 24590-WTP-3PS-MV00-T0001 and SC-I requirements for internals. Internals upgraded to SC-1 from SC-IV because internals are not replaceable or fixable remotely and the additional NDE will confirm the weld integrity of the internals.***

Note 5: ***Separation efficiency for demister is 85% minimum for 1 micron particle size or larger.***

Note 6: ***Deleted.***

Note 7: ***Vendor shall determine life expectancy for all non-metallic components and gaskets and confirm a minimum life expectancy of five years for each of these components.***

Note 8: ***Deleted.***

Note 9: ***SC-1 nozzle loads to be used from 24590-WTP-3PS-MV00-T0001 (CCN 175053).***

Note 10: ***For the seismic condition the design pressure shall be used.***

Equipment Cyclic Data

This information envelopes operational duty for fatigue assessment. It is not to be used as operational data.

Design Life	*40 Years*
Component Function and Life Cycle Description	*The PJV Demister is a semi-passive device designed for removal of radioactive mists and fine particulate from the PJV vent system. Removal is accomplished by flowing the exhaust gas through glass fiber filter elements. The operation is basically steady-state with the exception of maintenance periods as required. Maintenance would be limited to periodic washing of elements when off-line and the change-out of the glass fiber elements.*

Load Type	Min	Max	Number of Cycles	Comments
Design Pressure (psig)	FV	15	10	WTP Calc 24590-PTF-MVC-10-00003
Operating Pressure (psig)	-1.3	-0.29	7.0E6	WTP Calc 24590-PTF-MVC-10-00003
Operating Temperature (°F)	80	115	5,150	WTP Calc 24590-PTF-MVC-10-00003
Contents Specific Gravity	1.0	1.0	N/A	WTP Calc 24590-PTF-MVC-10-00003
Contents Level (inch)	Normally empty	Normally empty	N/A	WTP Calc 24590-PTF-MVC-10-00003
Localized features:	Temperature Range (°F)		Number of Cycles/Comment	
Nozzles	N/A		N/A	
Supports	N/A		N/A	

Notes

1. The Seller shall increase the number of operational cycles given above by 10% to account for commissioning duty unless otherwise noted.

Safety/Screening/Evaluation Required? If yes per 24590-WTP-GPP-SREG-002, E&NS signature required below.		Yes X		No

BECHTEL	**MECHANICAL DATA SHEET: DEMISTER**	**PLANT ITEM No.** ***24590-PTF-MV-PJV-DMST-00002A/B/C***

Approval

Rev	Description	System Engr	Vessel Engr	Checked	Reviewed	E&NS	Approved	Date
A	Issued for Quote	J. Dave	M. Arulampalam	C. Slater/A. Molina	S. Atri	N/A	M. Hoffmann	1/23/04
B	Added or revised environmental qualification, radiation dose rate and notes	J. Dave	M. Arulampalam	C. Slater/A. Molina	D. Adler	N/A	M. Hoffmann	4/13/05
C	Corrected plant item number, assigned Design Level, revised pressure and temperatures, added calc references & cyclic data.	J. Dave	R. Peters	M. Seed/S. Sain	D. Adler	J. Brown	J. Julyk	10/24/06
0	Issued for purchase, deleted old EQ data, added new EQ Datasheet	D. Mildon	R. Peters	C. Chung	Mike Seed	G. Hendricks	J. Julyk	6/10/08

EQUIPMENT QUALIFICATION DATASHEET (EQD)

Equipment Identification

Component Tag Number	24590-PTF-MV-PJV-DMST-00002A, 00002B, 00002C	Safety Classification	☒ SC ☐ SS ☐ APC ☐ SDC ☐ SDS ☐ RRC
Manufacturer / Supplier	TBD		
Requisition Number	24590-QL-MRA-MVA0-00013		
Model	N/A	Seismic Category	☒ SC-I ☐ SC-II ☐ SC-III ☐ SC-IV
Description (Include descriptive text [e.g., location, elevation])	Pulse Jet Ventilation (PJV) System Demister. Located in Room P-0335, Elev. 56'-0", K/23 (24590-PTF-P1-P23T-01001)		
Safety Function(s)	The PJV Demister housing is SC for confinement (SED PTF 24590-WTP-SED-ENS-03-002-02 Rev 2, Section 4.3.19.2). The piping and equipment housings will not bend or fold to block the passage of the PJV exhaust gases. The in-line component internal elements are constructed of materials and supported to prevent blocking the pathway established by the piping (SED PTF 24590-WTP-SED-ENS-03-002-02 Rev 2, Section 4.3.19.5).		

Seismic Safety Function	☒ Yes ☐ No	Room Number(s): P-0335	
Maintenance Accessible	☒ Yes ☐ No	Method of Maintenance Access:	☒ Remote ☐ Hands On ☐ None
Seismic Operability Requirements:	☒ During Seismic Event	☒ After Seismic Event	
ITS Equipment Type:	☒ Passive Mechanical	☐ Active Mechanical	☐ Electrical

Equipment Environmental Qualification (EEQ)

Environment ☐ Mild ☒ Harsh Contamination Class: C5 Radiation Class: R5	Hi Rad Service ☒ Yes ☐ No	Design Life (yrs) ☒ 40 ☐ Other ____

Parameter Type/Units	Parameter Value	Time Duration (number)	Time Units	WTP Document Number (BUYER)	Submittal Number (SELLER)
Normal					
Normal High Temperature (°F)	113	40	yrs	24590-PTF-U0D-W16T-00001	Note 11
Normal Low Temperature (°F)	59	40	yrs	24590-PTF-U0D-W16T-00001	Note 11
Normal High Relative Humidity (%RH)	100	40	yrs	24590-PTF-U0D-W16T-00001	Note 11
Normal Low Relative Humidity (%RH)	5	40	yrs	24590-PTF-U0D-W16T-00001	Note 11
Normal High Pressure (in.-w.g.)	0 (Note 12)	40	yrs	24590-PTF-U0D-W16T-00001	Note 11
Normal Low Pressure (in.-w.g.)	- 1.4 (Note 12)	40	yrs	24590-PTF-U0D-W16T-00001	Note 11
Normal Radiation Dose Rate (mR/hr)	53,050	1	YR	Note 14	Note 11
Vibration Magnitude (g)	N/A	N/A	N/A	N/A	N/A
Vibration Frequency (Hz)	N/A	N/A	N/A	N/A	N/A
Additional Normal Information:	N/A				

Equipment Environmental Qualification (EEQ) *(continued)*

Parameter Type/Units	Parameter Value	Time Duration (number)	Time units	WTP Document Number (BUYER)	Submittal Number (SELLER)
Abnormal					
Abnormal High Temperature (°F)	146	8	hrs/yr	24590-PTF-U0D-W16T-00001	Note 11
Abnormal Low Temperature (°F)	40	8	hrs/yr	24590-PTF-U0D-W16T-00001	Note 11
Abnormal High Relative Humidity (%RH)	100	24	hrs/yr	24590-PTF-U0D-W16T-00001	Note 11
Abnormal Low Relative Humidity (%RH)	4	22	hrs/yr	24590-PTF-U0D-W16T-00001	Note 11
Abnormal High Pressure (in.-w.g.)	4 (Note 12)	8	hrs/yr	24590-PTF-U0D-W16T-00001	Note 11
Abnormal Low Pressure (in.-w.g.)	- 7.3 (Note 12)	8	hrs/yr	24590-PTF-U0D-W16T-00001	Note 11
Abnormal Radiation Dose Rate (mR/hr)	40000	N/A	N/A	24590-PTF-U0D-W16T-00001	Note 11
Wet Sprinkler System Present	No	N/A	N/A	24590-PTF-U0D-W16T-00001	Note 11
Additional Abnormal Information	N/A				
Design Basis Events (DBE)					
DBE High Temperature (°F)	146	1000	hrs	24590-PTF-U0D-W16T-00001	Note 11
DBE Low Temperature (°F)	40	1000	hrs	24590-PTF-U0D-W16T-00001	Note 11
DBE High Relative Humidity (%RH)	100	482	hrs/yr	24590-PTF-U0D-W16T-00001	Note 11
DBE Low Relative Humidity (%RH)	4	1000	hrs	24590-PTF-U0D-W16T-00001	Note 11
DBE High Pressure (in.-w.g.)	4 (Note 12)	1000	hrs	24590-PTF-U0D-W16T-00001	Note 11
DBE Low Pressure (in.-w.g.)	- 7.3 (Note 12)	1000	hrs	24590-PTF-U0D-W16T-00001	Note 11
DBE Radiation Dose Rate (mR/hr)	40000	N/A	N/A	24590-PTF-U0D-W16T-00001	Note 11
Flood Height (ft)	0.96	1000	hrs	24590-PTF-U0D-W16T-00001; flood height per 24590-PTF-M0C-10-00009; flood duration per 24590-WTP-SE-ENS-07-0119	Notes 11
Submergence (ft)	N/A (Note 13)	N/A	N/A	N/A	N/A
Chemical/Spray Exposure	Yes	1000	hrs	24590-PTF-U0D-W16T-00001	Note 11
Additional DBE Information	N/A				

EQUIPMENT QUALIFICATION DATASHEET (EQD)

DBE Chemical Exposure Details	
DBE Chemical Types/Concentrations	Nitric Acid (2M) Sodium Hydroxide (2M)

Interfaces (Electrical)	
Power Supply Voltage (VAC, VDC)	N/A
Power Supply Frequency (Hz)	N/A
Power Connection Method	N/A
I/O Signals to/from Equipment	N/A
I/O Connection Method	N/A

Interfaces (Mechanical)	
Mounting Configuration (orientation)	Vertical vessel with skirt.
Mounting Method (bolts, welds, etc.)	Bolts.
Auxiliary Devices	N/A

Equipment Seismic Qualification (ESQ)

Parameter	Title	Reference/Document Number	Version / Revision	Remarks
WTP Seismic Design Specification (BUYER)	Engineering Specification for Seismic Qualification of Seismic Category I/II Equipment and Tanks	24590-WTP-3PS-SS90-T0001	2	N/A
	Engineering Specification for Seismic Qualification Criteria for Pressure Vessels	24590-WTP-3PS-MV00-T0002	2	
Specified Seismic Load (BUYER)	In-Structure Response Spectra (ISRS), Figures 11E, 12E, and 119	24590-PTF-S0C-S15T-00005; CCN 138085	B	Provided to the vendor via MR 24590-QL-MRA-MVA0-00013
Design Seismic Load (SELLER	N/A	N/A	N/A	To be provided by the Seller via the G-321E submittal process
Qualification Method (SELLER)	N/A	N/A	N/A	Dynamic Analysis utilizing response spectra curves
Qualification Report Number (SELLER)	N/A	N/A	N/A	To be provided by the Seller via the G-321E submittal process
Submittal Number (BUYER)	N/A	N/A	N/A	N/A

Notes and Additional Information

Note 11: BNI (BUYER) shall perform Equipment Environmental Qualification in accordance with 24590-WTP-DC-ENG-06-001, Design Criteria for Equipment Seismic and Environmental Qualification.

Note 12: Where pressure is given in inches of water column (in-w.c.) in the source document, it is generally assumed that this is in reference to atmospheric pressure and is therefore equivalent to inches of water gage (in-w.g.).

Note 13: Submergence is N/A since the vessel is over 16 ft. tall and flood height is 0.96 ft.

Note 14: The radiation dose is the conservatively bounding sum of internal dose (13,050 mR/hr per CCN 172556) and external dose (40,000 mR/hr per CCN 167203) and assumes filter element washdown once per year. Total annual dose is:

53,050 mR/hr * 8,760 hrs/yr * m/1,000 = 464,718 R/yr

The damage threshold for EPDM is 1E06 Rads.

DOE Radioactive Materials Disclaimer:
Please note that source, special nuclear and byproduct materials, as defined in the Atomic Energy Act of 1954 (AEA), are regulated at the US Department of Energy (DOE) facilities exclusively by DOE acting pursuant to its AEA authority. DOE asserts, that pursuant to the AEA it has sole and exclusive responsibility and authority to regulate source, special nuclear, and byproduct materials at DOE-owned nuclear facilities. Information contained herein on radionuclides is provided for process description purposes only.

CORROSION EVALUATION

PJV-DMST-00002A/B/C (PTF)
PJV Demister

- Design Temperature (°F)(max/min): 140/40
- Design Pressure (psig) (internal/external): 15/FV
- Location: PT Filter Cave; Room P-0335

Contents of this document are Dangerous Waste Permit affecting

Operating conditions are as stated on attached Process Corrosion Data Sheet

Options Considered:

- Vessels are not designed to be replaceable during the life of the PT facility.
- Remote change-out of the demister cartridge is provided

Materials Considered:

Material (UNS No.)	Acceptable Material	Unacceptable Material
Type 304L (S30403)	X	
Type 316L (S31603)	X	
6% Mo (N08367/N08926)	X	
Hastelloy® C-22® (N06022)	X	
Inconel 625 (UNS N06625)	X	

Recommended Material: Containment –Type 304 (max 0.030% C; dual certified)

Recommended Corrosion Allowance: 0.040 inch (includes 0.024 inch corrosion allowance and 0.004 inch erosion allowance)

Process & Operations Limitations:

- The demister pad will be rinsed as necessary based on an increased d/p across the pad. Rinsing will limit buildup of solids and thus minimize corrosion.

Concurrence _____
Operations

REV	DATE	REASON FOR REVISION	PREPARER	CHECKER	MET	APPROVER
0	6/3/10	Initial Issue	DLAdler	DMitchell	RBEavis	SWVail

CORROSION EVALUATION

Please note that source, special nuclear and byproduct materials, as defined in the Atomic Energy Act of 1954 (AEA), are regulated at the U.S. Department of Energy (DOE) facilities exclusively by DOE acting pursuant to its AEA authority. DOE asserts, that pursuant to the AEA, it has sole and exclusive responsibility and authority to regulate source, special nuclear, and byproduct materials at DOE-owned nuclear facilities. Information contained herein on radionuclides is provided for process description purposes only.

This bound document contains a total of 7 sheets.

CORROSION EVALUATION

Corrosion Considerations:

The demisters are used to remove fine aerosols and mist.

a General Corrosion
Corrosion rates in dilute caustic and water are less than 1 mpy and likely much less.

Conclusion:
Type 304L and type 316L are both expected to be sufficiently resistant with a probable general corrosion rate of less than 1 mpy at up to 200°F.

b Pitting Corrosion
Pitting should not be a concern for either type 304L or type 316L at the stated low-chloride conditions and stated temperature.

Conclusion:
Under normal conditions, type 304L is expected to be satisfactory.

c End Grain Corrosion
End grain corrosion only occurs in metal with exposed end grains and in highly oxidizing acid conditions.

Conclusion:
Not applicable to this system.

d Stress Corrosion Cracking
The exact amount of chloride required to cause stress corrosion cracking is unknown. In part this is because the amount varies with temperature, metal sensitization, and the environment. But it is also unknown because chloride tends to concentrate under heat transfer conditions, by evaporation, and electrochemically during a corrosion process. Hence, even as little as a few ppm can lead to cracking under some conditions. Generally, as seen in Sedriks (1996) and Davis (1987), chloride stress corrosion cracking does not usually occur below about 140°F. During the normal operations, type 304L and type 316L are both expected to be satisfactory.

Conclusion:
At the normal, stated, operating environment, type 304L is satisfactory.

e Crevice Corrosion
See Pitting.

Conclusion:
See Pitting

f Corrosion at Welds
Corrosion at welds is not considered a problem in the proposed environment.

Conclusion:
Weld corrosion is not considered a problem for this system.

g Microbiologically Induced Corrosion (MIC)
The proposed operating temperatures are acceptable for microbial growth but there appears to be little chance of the introduction of microbes.

Conclusion:
MIC is not expected to be a problem.

h Fatigue/Corrosion Fatigue
Corrosion fatigue is not expected to be a problem in this vessel.

Conclusions
Not considered to be a problem.

CORROSION EVALUATION

i Vapor Phase Corrosion
Not considered to be a concern in this vessel.

Conclusion:
Not a concern.

j Erosion
Velocities within the vessel are expected to be low. Erosion allowance of 0.004 inch for stainless steel components with low solids content (< 2 wt%) at low velocities is based on 24590-WTP-RPT-M-04-0008.

Conclusion:
Not expected to be a concern.

k Galling of Moving Surfaces
Not applicable.

Conclusion:
Not applicable.

l Fretting/Wear
Fretting/wear is not anticipated due to the lack of moving parts.

Conclusion:
Not a concern.

m Galvanic Corrosion
No dissimilar metals are present.

Conclusion:
Not applicable.

n Cavitation
None expected.

Conclusion:
Not believed to be of concern.

o Creep
The temperatures are too low to be a concern.

Conclusion:
Not applicable.

p Inadvertent Nitric Acid Addition
No acid is anticipated but all alloys are sufficiently resistant to nitric acid.

Conclusion:
The recommended materials will be able to withstand a plausible inadvertent addition of 0.5 M nitric acid.

CORROSION EVALUATION

References:

1. 24590-PTF-MVC-10-00003, Rev. 00C, *PTF Vessel Cyclic Datasheet Inputs*
2. 24590-WTP-RPT-M-04-0008, Rev. 2, *Evaluation Of Stainless Steel Wear Rates In WTP Waste Streams At Low Velocities*
3. 24590-WTP-RPT-PR-04-0001, Rev. CB, *WTP Process Corrosion Data*
4. Davis, JR (Ed), 1987, *Corrosion, Vol 13*, In "Metals Handbook", ASM International, Metals Park, OH 44073
5. Sedriks, AJ, 1996, *Corrosion of Stainless Steels*, John Wiley & Sons, Inc., New York, NY 10158

Bibliography:

1. 24590-PTF-MVD-PJV-00004, *Mechanical Data Sheet for 24590-PTF-MV-PJV-DMST-00002A/B/C - Demister*
2. 24590-PTF-M6-PJV-00002, *P&ID - PTF Pulse Jet Ventilation System Inlet Header To Demister Outlet*
3. Agarwal, DC, *Nickel and Nickel Alloys*, In: Revie, WW, 2000. *Uhlig's Corrosion Handbook*, 2nd Edition, Wiley-Interscience, New York, NY 10158
4. Cole, HS, 1974, *Corrosion of Austenitic Stainless Steel Alloys Due to HNO_3 – HF Mixtures*, ICP-1036, Idaho Chemical Programs – Operations Office, Idaho Falls, ID
5. Davis, JR (Ed), 1994, *Stainless Steels*, In ASM Metals Handbook, ASM International, Metals Park, OH 44073
6. Dillon, CP (Nickel Development Institute), Personal Communication to J R Divine (ChemMet, Ltd., PC), 3 Feb 2000.
7. Hamner, NE, 1981, *Corrosion Data Survey*, Metals Section, 5th Ed, NACE International, Houston, TX 77218
8. Jones, RH (Ed.), 1992, *Stress-Corrosion Cracking*, ASM International, Metals Park, OH 44073
9. Koch, GH, 1995, *Localized Corrosion in Halides Other Than Chlorides*, MTI Pub No. 41, Materials Technology Institute of the Chemical Process Industries, Inc, St Louis, MO 63141
10. Ohl, PC to PG Johnson, Internal Memo, Westinghouse Hanford Co, *Technical Bases for Cl- and pH Limits for Liquid Waste Tank Cars*, MA: PCO:90/01, January 16, 1990.
11. Uhlig, HH, 1948, *Corrosion Handbook*, John Wiley & Sons, New York, NY 10158
12. Van Delinder, LS (Ed), 1984, *Corrosion Basics*, NACE International, Houston, TX 77084

CORROSION EVALUATION

24590-WTP-RPT-PR-04-0001, Rev. 0CB
WTP Process Corrosion Data

PROCESS CORROSION DATA SHEETS

Component(s) (Name/ID #) PJV drain collection vessel (PJV-VSL-00002);
PJV demister (PJV-DMST-00002A/B/C)

Facility PTF

In Black Cell? Yes (vessel only)

Chemicals	Unit[1]	Contract Max[2]		Non-Routine		Notes
		Leach	No leach	Leach	No Leach	
Aluminum	g/L	9.77E-04	9.37E-04			
Chloride	g/L	4.31E-04	4.63E-04			
Fluoride	g/L	4.88E-04	5.24E-04			
Iron	g/L					
Nitrate	g/L	7.06E-03	7.49E-03			
Nitrite	g/L	2.23E-03	2.39E-03			
Phosphate	g/L	1.60E-03	1.69E-03			
Sulfate	g/L	8.58E-04	9.20E-04			
Mercury	g/L					
Carbonate	g/L	2.70E-03	2.79E-03			
Undissolved solids	wt%					
Other (NaMnO4, Pb,...)	g/L					
Other	g/L					
pH	N/A					Note 4
Temperature	°F					Note 3

List of Organic Species:

References

System Description: 24590-PTF-3YD-PJV-00001
Mass Balance Document: 24590-WTP-M4C-V11T-00005, Rev A
Normal Input Stream #: PJV04, PJV07, PJV09, demister drains
Off Normal Input Stream # (e.g., overflow from other vessels): N/A
P&ID: N/A
PFD: 24590-PTF-M5-V17T-00021002
Technical Reports: N/A

Notes:

1. Concentrations less than 1×10^{-4} g/L do not need to be reported; list concentration values to three significant digits max.
2. Data developed from a mass balance model which has constituents in the plant feed which are important to corrosion, adjusted to contract maximum values.
* 3. T operation: 59 °F minimum, 77 °F normal, 113 °F maximum (24590-PTF-MVC-PJV-00006, Rev 0, sheet 5)
4. pH will be nominally 9 to 10 but could get as low as 7

Assumptions:

* Referenced calc 24590-PTF-MVC-PJV-00006 has been cancelled. 24590-PTF-MVC-10-00003 assumes operating temperatures 80 °F (normal) and 115 °F (maximum).

CORROSION EVALUATION

4.7.1.1 Demisters

Routine Operations

The demisters are passive devices used to remove fine aerosols and mist. They have medium removal efficiencies for sub-micron aerosols.

Non-Routine Operations that Could Affect Corrosion or Erosion

Remote changeout of the demister cartridges is provided. Demisters may need to be sprayed down with demineralized water to remove collected solids.

Attachment 3
11-ESQ-141
(2 Pages)

Bechtel National, Inc. and U.S. Department of Energy,
Office of River Protection Certification Statements

U.S. Department of Energy, Office of River Protection Certification

The following certification statement is provided for the submittal of permit packages PTF-040, Revision 1, "Supplemental Permit Package for UFP-VSL-00062A, UFP-VSL-00062B, and UFP-VSL-00062C Vessel Alterations" and PTF-079b, Revision 0, "Miscellaneous Treatment Unit for PT PJV Demisters (PJV-DMST-00002A/B/C) at Elevation 56 ft."

I certify under penalty of law that this document and all attachments were prepared under my direction or supervision in accordance with a system designed to assure that qualified personnel properly gather and evaluate the information submitted. Based on my inquiry of the person or persons who manage the system, or those persons directly responsible for gathering the information, the information submitted is, to the best of my knowledge and belief, true, accurate, and complete. I am aware that there are significant penalties for submitting false information, including the possibility of fine and imprisonment for knowing violations.

7/14/11

Scott L. Samuelson, Manager
U.S. Department of Energy
Office of River Protection

Date

Bechtel National, Inc. Certification

The following certification statement is provided consistent with Contract No. DE-AC27-01RV14136, Section H.26, Environmental Permits, paragraph (g) for the submittal of permit packages PTF-040, Revision 1, *Supplemental Permit Package for UFP-VSL-00062A, UFP-VSL-00062B, and UFP-VSL-00062C Vessel Alterations* and PTF-079b, Revision 0, *Miscellaneous Treatment Unit for PT PJV Demisters (PJV-DMST-00002A/B/C) at Elevation 56 ft.*

I certify under penalty of law that this document and all attachments were prepared under my direction or supervision in accordance with a system designed to assure that qualified personnel properly gather and evaluate the information submitted. Based on my inquiry of the person or persons who manage the system, or those persons directly responsible for gathering the information, the information submitted is, to the best of my knowledge and belief, true, accurate, and complete. I am aware that there are significant penalties for submitting false information, including the possibility of fine and imprisonment for knowing violations.

F. M. Russo
Project Director

5/19/11
Date