0045795

DOE/RL-96-75

UC-630

Radioactive Air Emissions Notice of Construction Portable/Temporary Radioactive Air Emission Units

Date Published
August 1996

NOV 1996
RECEIVED
EDMC

United States
Department of Energy
P.O. Box 550
Richland, Washington 99352

Approved for Public Release

CONTENTS

TERMS v

METRIC CONVERSION CHART vi

1.0 INTRODUCTION 1

2.0 FACILITY LOCATION 2

3.0 RESPONSIBLE MANAGER (Requirement 2) 2

4.0 TYPE OF PROPOSED ACTION (Requirement 3) 2

5.0 STATE ENVIRONMENTAL POLICY ACT (Requirement 4) 2

6.0 PROCESS DESCRIPTION (Requirement 5 and 7) 3

7.0 ANNUAL POSSESSION QUANTITY AND PHYSICAL FORM
(Requirements 8, 10, 11, AND 12) 3

8.0 CONTROL SYSTEM (Requirement 6) 5

9.0 MONITORING SYSTEM (Requirement 9) 6

10.0 RELEASE RATES (Requirement 13) 7
10.1 UNABATED EMISSIONS 7
10.2 ABATED EMISSIONS 8

11.0 OFFSITE IMPACT (Requirements 14 and 15) 9
11.1 UNABATED DOSE 9
11.2 ABATED DOSE 10

12.0 FACILITY LIFETIME (Requirement 17) 11

13.0 TECHNOLOGY STANDARDS (Requirement 18) 11

14.0 DISCUSSION OF BEST AVAILABLE RADIONUCLIDE CONTROL TECHNOLOGY . . . 12

15.0 REFERENCES 12

APPENDICES

A SCHEMATICS AND DRAWINGS "TYPICAL SAMPLE PREPARATION" UNIT . . . APP A-i

B RADIOACTIVE HANDLING LIMITS . . . . . APP B-i

C SAMPLE DATA USED FOR TYPE II AND III UNITS . . . . . APP C-i

D PORTABLE/TEMPORARY RADIONUCLIDE AIRBORNE EMISSION UNIT LISTINGS . . . . . APP D-i

E EXAMPLE OF A LOG SHEET AND EXAMPLE CALCULATIONS TO DETERMINE MAXIMUM EXPECTED ANNUAL EMISSIONS . . . . . APP E-i

TABLES

1. Facility Inventory 5
2. Unabated Emissions 8
3. Abated Emissions 9
4. Unabated Dose 10
5. Abated Dose 11
6. Control Technology Standards 12

TERMS

BARCT	best available radionuclide control technology
BTU	British thermal unit
CAM	continuous air monitor
D/P	differential pressure
DOE-RL	U.S. Department of Energy, Richland Operations Office
DOH	Washington State Department of Health
EDE	effective dose equivalent
ERA	expedited response actions
HEPA	high-efficiency particulate air
MEI	maximally exposed individual
NDA	nondestructive assay
NOC	notice of construction
PTRAEUs	portable/temporary radionuclide airborne emission unit
RHL	radioactivity handling limits
TEDE	total effective dose equivalent
WAC	Washington Administrative Code

METRIC CONVERSION CHART

Into metric units			Out of metric units		
If you know	Multiply by	To get	If you know	Multiply by	To get
Length			**Length**		
inches	25.40	millimeters	millimeters	0.0393	inches
inches	2.54	centimeters	centimeters	0.393	inches
feet	0.3048	meters	meters	3.2808	feet
yards	0.914	meters	meters	1.09	yards
miles	1.609	kilometers	kilometers	0.62	miles
Area			**Area**		
square inches	6.4516	square centimeters	square centimeters	0.155	square inches
square feet	0.092	square meters	square meters	10.7639	square feet
square yards	0.836	square meters	square meters	1.20	square yards
square miles	2.59	square kilometers	square kilometers	0.39	square miles
acres	0.404	hectares	hectares	2.471	acres
Mass (weight)			**Mass (weight)**		
ounces	28.35	grams	grams	0.0352	ounces
pounds	0.453	kilograms	kilograms	2.2046	pounds
short ton	0.907	metric ton	metric ton	1.10	short ton
Volume			**Volume**		
fluid ounces	29.57	milliliters	milliliters	0.03	fluid ounces
quarts	0.95	liters	liters	1.057	quarts
gallons	3.79	liters	liters	0.26	gallons
cubic feet	0.03	cubic meters	cubic meters	35.3147	cubic feet
cubic yards	0.76456	cubic meters	cubic meters	1.308	cubic yards
Temperature			**Temperature**		
Fahrenheit	subtract 32 then multiply by 5/9ths	Celsius	Celsius	multiply by 9/5ths, then add 32	Fahrenheit
Force			**Force**		
pounds per square inch	6.895	kilopascals	kilopascals	1.4504×10^{-4}	pounds per square inch

Source: *Engineering Unit Conversions*, M. R. Lindeburg, PE., Second Ed., 1990, Professional Publications, Inc., Belmont, California.

RADIOACTIVE AIR EMISSIONS
NOTICE OF CONSTRUCTION
PORTABLE/TEMPORARY RADIOACTIVE AIR EMISSION UNITS

1.0 INTRODUCTION

This notice of construction (NOC) requests a categorical approval for construction and operation of three types of portable/temporary radionuclide airborne emission units (PTRAEUs). These three types are portable ventilation-filter systems (Type I), mobile sample preparation facilities (Type II), and mobile sample screening and analysis facilities (Type III). Approval of the NOC application is intended to allow construction and operation of the three types of PTRAEUs without prior project-specific approval.

Environmental cleanup efforts on the Hanford Site often require the use of PTRAEUs. The PTRAEUs support site characterization activities, expedited response actions (ERAs), sampling and monitoring activities, and other routine activities. The PTRAEUs operate at various locations around the Hanford Site.

Radiation Air Emissions Program, Washington Administrative Code (WAC) 246-247, requires that the Washington State Department of Health (DOH) be notified before construction of any new emission that would release airborne radioactivity. The DOH also must receive notification before any modification of an existing source. This includes changes in the source term or replacement of emission control equipment, which significantly might contribute to the offsite maximum dose from a licensed facility.

During site characterization activities, ERAs, sampling and monitoring activities, and other routine activities, the PTRAEUs might require startup immediately. The notification period hampers efforts to complete such activities in an effective and timely manner. Additionally, notification is to be submitted to the DOH when the PTRAEUs are turned off. The U.S. Department of Energy, Richland Operations Office (DOE-RL) potentially could generate several notifications monthly. The DOH would be required to review and provide approval on each NOC as well as review the notices of discontinued sources. The DOH regulation also allows facilities the opportunity to request a single categorical license that identifies limits and conditions of operations for similar multipurpose temporary and/or portable emission units.

The DOE-RL will submit annually to the DOH a report summarizing the log books maintained on the individual PTRAEUs. The report will supply information needed to maintain oversight of the operations of PTRAEUs on the Hanford Site.

The NOC includes a general description of the three types of PTRAEUs, tracking mechanisms, emissions control systems, and radioactivity handling limits (RHLs) for the PTRAEUs. The NOC is based on hypothetical data to demonstrate how emission estimates could be calculated. Tracking will be

performed and monitoring will be conducted for compliance with both federal and state regulations. Type I units will use a single isotope based on a calculated RHL (source term) to determine emissions, dose, and monitoring requirements. Type II and III units will use field data and process knowledge to determine emissions, dose, and monitoring requirements.

New PTRAEUs that conform to any of the three types of PTRAEUs described in this application will be added to the next annual report after the units are placed in service. Any unit fitting into a category will be evaluated for its applicability to this application before being placed into service.

New PTRAEUs, which do not conform to any of the three types of PTRAEUs described in this application, will require approval on an individual basis by the DOH before startup.

2.0 FACILITY LOCATION

U.S. Department of Energy, Richland Operations Office
Hanford Site
Richland, Washington 99352

The PTRAEUs could be located at any facility located on the Hanford Site. These units are portable and are used in various locations as needed.

3.0 RESPONSIBLE MANAGER (Requirement 2)

Mr. J. E. Rasmussen, Division Director
Office of Environmental Assurance,
Policy, and Permits
U.S. Department of Energy, Richland Operations Office
P.O. Box 550
Richland, Washington 99352

4.0 TYPE OF PROPOSED ACTION (Requirement 3)

This proposed action serves as a categorical permit for existing and future PTRAEUs and modification of similar sources located and operated on the Hanford Site.

5.0 STATE ENVIRONMENTAL POLICY ACT (Requirement 4)

The use of PTRAEUs is categorically exempt from the *State Environmental Policy Act of 1971* process.

6.0 PROCESS DESCRIPTION (Requirement 5 and 7)

Type I PTRAEUs are portable ventilation-filter units. Type II PTRAEUs are mobile sample preparation units. Type III PTRAEUs are mobile screening and analysis units. Each type of PTRAEU is described in the following paragraphs.

Most of the PTRAEUs are portable ventilation-filter units (Type I) with a capacity from approximately 50 to 2,000+ cubic feet per minute exhaust flow rate. The portable ventilation-filter units control radionuclide emissions by providing filtered ventilation on sites where work activities potentially could disturb areas with radioactive contamination. Type I units that are vacuums are listed to be used as ventilation units. If the vacuum is used in any other manner/process, the DOH must approve its use under separate application before the activity commences.

Mobile sample preparation units (Type II) decrease the chance of unintentional cross-contamination of samples and enhance personnel radiological safety. The sample preparation units enable technicians to remove material from core barrels, homogenize the material, and fill prescribed sample containers for onsite and offsite analysis. In enclosed, self-contained sample preparation units, radiological exposure and interference from environmental conditions (i.e., wind, precipitation, and exhaust fumes) are minimized. Examples of a typical sample preparation unit and other diagrams are presented in Appendix A.

Mobile sample screening and analysis units (Type III) provide preliminary screening of samples to determine potential problem areas at a site. The units also screen samples to identify those samples requiring further in-depth analysis. Screening samples decreases the number of samples transported for analysis. The fast turnaround analysis time can provide results for a field situation requiring expeditious response.

The source of radionuclides handled by the mobile sample preparation facilities and mobile screening and analysis facilities is contaminated soils and/or liquids extracted from cribs, ditches, ponds, burial sites, and other such areas with surficial soil contamination. An additional source of radionuclides is the preparation of radioactive standards to be used for instrument calibration.

7.0 ANNUAL POSSESSION QUANTITY AND PHYSICAL FORM (Requirements 8, 10, 11, AND 12)

The facility inventory that a PTRAEU does or will handle varies from activity to activity. In many cases, the exact inventory is unknown at the beginning of the activity. To assist operators of the PTRAEUs to determine the requirements for compliance with federal and state regulations, RHLs were derived for each of the major areas where PTRAEUs could be operated.

The RHLs were calculated for a daily use because many of the activities are of short duration. The second assumption in calculating the RHLs was that the 0.1 millirem per year criteria is used, as a beginning point and the source term that could be handled each day is back calculated. The RHLs and instructions for their use are found in Appendix B.

Table 1 lists the source term that the different types of units theoretically could handle. The RHLs (source term) were used to determine Type I facility inventory (per activity); sample data and process knowledge were used in determining Type II and III facility inventory (per activity).

The inventories for Type I units were derived by using the RHL for cesium-137 found in the 300 Area and handled 365 days per year by a single unit. The RHL for cesium-137 is 5.70 E-01 curies per day multiplied by 365 days, which equals the inventory listed in Table 1.

The inventories for Type II and III units were based on sample analysis (Appendix C) for cesium-137, strontium-90 and americium-241 and limited by the number of samples handled at each location during a year. Type II units could handle 100 samples and Type III units could handle 1,100 samples.

All inventories in Table 1 are based on hypothetical worst-case source terms that a portable unit could handle during any given activity and remain below 0.1 millirem per year unabated dose.

When a user determines the source term (e.g., facility inventory) for the activity, the user will take into consideration all radionuclides that potentially contribute 10 percent of the total effective dose equivalent (TEDE) to the maximum exposed individual (MEI).

For Type I units, the confinement method or structure is considered contiguous with the ventilation system. All source material at risk within confinement must be included in the emission estimates. This means that actively ventilating a high-level waste tank is different from a previously approved passive system that does not pull a negative pressure on the source term.

Additionally, if a portable unit is used inside or near an existing source whose facility stack is registered with the DOH and the activity emissions are vented through that stack, causing no net increase to the original potential to emit, the unit is not required to comply with this application. Under this condition the process that is performed routinely or a routine maintenance activity that is conducted, the source term for the facility does not increase.

Table 1. Facility Inventory.

Radionuclides	Physical form	Annual possession quantity (curies per year)
TYPE I UNIT		
Cs-137	Particulate/liquids	2.08 E+2
TYPE II UNIT		
Cs-137	Particulate/liquids	3.6 E+00
Sr-90	Particulate/liquids	6.6 E+00
Am-241	Particulate/liquids	2.2 E-03
TYPE III UNIT		
Cs-137	Particulate/liquids	3.96 E+01
Sr-90	Particulate/liquids	7.26 E+01
Am-241	Particulate/liquids	2.42 E-02

8.0 CONTROL SYSTEM (Requirement 6)

All portable ventilation filter units (Type I) are equipped with a high-efficiency particulate air (HEPA) filter. Some of the portable ventilation filter systems have an additional HEPA filter in series, a charcoal adsorber(s) or moisture separator(s).

The mobile sample preparation and mobile screening and analysis units (Type II and Type III) have an exhaust system consisting of a single-stage HEPA filter, followed by an activated charcoal adsorber. The activated charcoal adsorbers would abate any radioactive iodine released during operation of the PTRAEUs.

For new HEPA installations, the systems are field tested, requiring an aerosol test/efficiency test or equivalent pass/fail criteria of 99.95 percent.

The PTRAEU filtration systems are tested whenever the system is modified and/or opened or annually, whichever occurs first. Type II and III units are not affected by a move to another location, unless the glovebox/HEPA control system physically is removed from the trailer or if the control system is opened. If the entire laboratory is relocated, there is no need for testing; however, if the inside equipment is removed from one trailer to another, aerosol testing/efficiency testing would be required. Certification of testing is verified by affixing a label on the unit that indicates who performed the test, the test date, and if the unit passed the test. The label should be placed in a conspicuous location on the unit.

9.0 MONITORING SYSTEM (Requirement 9)

At any given location, the length of operation of portable ventilation-filter systems typically will span 4 weeks to 6 months. Mobile sample preparation and screening and analysis facilities can operate for extended periods on projects relating to site characterization (e.g., 1 to 2 years).

Appendix D contains a table of PTRAEUs used on the Hanford Site that have been identified to date and includes the number of units, property numbers, flow rates, uses, limitations, and characteristics. Also listed are normal storage location and usage; however, the units can be used or stored at any Hanford facility.

Appendix E contains an example of a log sheet used to track PTRAEUs and the calculations to determine maximum expected annual emissions. When implementing a PTRAEU, the responsible personnel (operators) log the following information.

- Purpose of operation
- Location of operation
- Estimated emissions
- Date(s) and time of startup/shutdown of ventilation system
- Total hours of ventilation system operation
- Air emissions source constituents and type (liquid, gas, solid)
- Type of control equipment connected to the unit
- Periodic confirmatory measurement.

In addition to this information, the operator determines the following.

- Emissions estimate--This information should include assumptions and the methodology used to determine the estimate. The data should be maintained by the operator and should indicate project-specific operations.

- Monitoring requirements--Includes measurement results taken during the operation. All monitoring will be in accordance with standard onsite procedures and performed by the appropriate organization(s).

A copy of the logs will be submitted annually to the DOH on February 15. The February 15 submittal will consist of PTRAEU operations from January through December. The estimated emissions from the units will be reviewed as directed by DOE-RL and summarized in the annual radioactive air emissions report for the Hanford Site.

The recordkeeping is not in lieu of required monitoring for health, safety, DOE/RL, or contractor requirements. This recordkeeping is intended to supplement normal methods of periodic confirmatory monitoring for emissions monitoring for reporting annual actual emissions for the unit. This recordkeeping also supports the reduction of NOC applications and notification submittals required by federal and state regulations.

The following methods will be considered appropriate for periodic confirmatory measurement, actual emission reporting:

- Nondestructive assay (NDA)
- Record sampler
- Continuous air monitoring (CAMs)
- Smear samples taken down stream of the HEPA filter.

The most appropriate method will be chosen based on requirements, such as health and safety, contractor regulatory requirements, cost, efficiency, and accessibility to the filtration and ventilation systems. Type II and III units are equipped with sampling ports in the ventilation system after filtration. Samplers will be the preferred method for ensuring compliance and reporting requirements for Type II and III units.

10.0 RELEASE RATES (Requirement 13)

This section provides information regarding the emission release rates from the PTRAEUs without the emission control systems in place. Also included is the effective dose equivalent (EDE) to the MEI offsite resulting from unabated emissions.

10.1 UNABATED EMISSIONS

Table 2 lists the unabated air emissions generated by the different types of units. The release fraction 1 E-03 for particulates was used because most activities involving PTRAEUs will involve the handling of dust, or some form of particulate radionuclide. In the case where a unit might need to handle a gas or a solid, calculations will be performed to ensure compliance with the conditions of the permit. When a solid is involved, 1 E-06 will be used; when a gas is involved, a release fraction of 1 will be used. In addition, if other controls are needed to control the release of a radionuclide in another form, a separate notification will be made to the required regulatory agency to ensure compliance with the applicable regulation.

Table 2. Unabated Emissions.

Radionuclides	Annual possession quantity (curies per year)	Appendix D factor	Annual unabated emissions (curies per year)
TYPE I UNIT			
Cs-137	2.08 E+02	0.001	2.08 E-01
TYPE II UNIT			
Cs-137	3.6 E+00	0.001	3.6 E-03
Sr-90	6.6 E+00	0.001	6.6 E-03
Am-241	2.2 E-03	0.001	2.2 E-06
TYPE III UNIT			
Cs-137	3.96 E+01	0.001	3.96 E-02
Sr-90	7.26 E+01	0.001	7.26 E-02
Am-241	2.42 E-02	0.001	2.42 E-05

10.2 ABATED EMISSIONS

Table 3 lists the abated air emissions generated by the different types of units. The HEPA filtration is the control equipment used on most of the units. Type II and III units are equipped with carbon adsorption; however, no credit was taken for these control units. Because most of the activities involve the handling of particulate solids, the HEPA filtration was considered the only control technology. A treatment factor of 3,000 was used when calculating the control efficiency of the HEPA systems.

If any other form of radionuclide is handled, the activity will be handled on a case-by-case basis. In addition, if other methods are needed to control the release of a radionuclide in another form, a separate notification will be made to the required regulatory agency to ensure compliance with the applicable regulation.

Table 3. Abated Emissions.

Radionuclides	Annual unabated emissions (curies per year)	Control treatment factor HEPA filtration	Annual abated emissions (curies per year)
TYPE I UNIT			
Cs-137	2.08 E-01	0.00033	6.86 E-05
TYPE II UNIT			
Cs-137	3.6 E-03	0.00033	1.19 E-06
Sr-90	6.6 E-03	0.00033	2.18 E-06
Am-241	2.2 E-06	0.00033	7.26 E-10
TYPE III UNIT			
Cs-137	1.58 E-02	0.00033	5.21 E-06
Sr-90	2.90 E-02	0.00033	9.57 E-06
Am-241	9.68 E-05	0.00033	3.19 E-08

11.0 OFFSITE IMPACT (Requirements 14 and 15)

Hanford Site air emissions from point sources resulted in an effective dose equivalent of 2.9 E-3 millirem per year to the MEI in 1995. The effective dose equivalent from all Hanford Site air emissions, including point sources, diffuse and fugitive sources, radon emissions, and thoron emissions, was determined to be 2.4 E-2 millirem per year to the MEI in 1995. The emissions as a result of the PTRAEUs in conjunction with other operations at the Hanford Site will not result in a violation of the National Emission Standard of 10 millirem per year.

11.1 UNABATED DOSE

The unabated dose to the MEI located at the Hanford Site boundary is shown in Table 4. The 300 Area radioactive handling limits were used, along with the dose factors for the 300 Area, to demonstrate the worst-case activity that might occur during an activity using a PTRAEU. The unit dose factors included were submitted previously to the DOH (WHC 1991). The information required to develop the unit dose factors from the Clean Air Assessment Package 1988 (CAP-88) computer code also was included in "Unit Dose Calculation Methods Summary of Facility Effluent Monitoring Plan Determinations" (WHC 1991).

Table 4. Unabated Dose.

Radionuclides	Annual unabated emissions (curies per year)	CAP-88 unit dose factor (millirem/curie)	Annual unabated dose (millirem/year)
TYPE I UNIT			
Cs-137	2.08 E-01	4.77 E-01	9.92 E-02
		TOTAL DOSE:	9.92 E-02
TYPE II UNIT			
Cs-137	3.6 E-03	4.77 E-01	1.72 E-03
Sr-90	6.6 E-03	8.72 E-01	5.76 E-03
Am-241	2.2 E-06	2.62 E+02	5.76 E-04
		TOTAL DOSE:	8.06 E-03
TYPE III UNIT			
Cs-137	3.96 E-02	4.77 E-01	1.89 E-02
Sr-90	7.26 E-02	8.72 E-01	6.33 E-02
Am-241	2.42 E-05	2.62 E+02	6.34 E-03
		TOTAL DOSE:	8.85 E-02

11.2 ABATED DOSE

The abated dose to the MEI located at the Hanford Site boundary is shown in Table 5. The 300 Area factors were used to indicate the worst-case activity that might be encountered. The unit dose factors included in the table are described in Section 11.1.

Table 5. Abated Dose.

Radionuclides	Annual abated emissions (curies per year)	CAP-88 unit dose factor (millirem/curie)	Annual abated dose (millirem/year)
TYPE I UNIT			
Cs-137	6.86 E-05	4.77 E-01	3.27 E-05
		TOTAL DOSE:	3.27 E-05
TYPE II UNIT			
Cs-137	1.19 E-06	4.77 E-01	5.86 E-05
Sr-90	2.18 E-06	8.72 E-01	1.90 E-06
Am-241	7.26 E-10	2.62 E+02	1.90 E-07
		TOTAL DOSE:	5.98 E-05
TYPE III UNIT			
Cs-137	5.21 E-06	4.77 E-01	2.48 E-06
Sr-90	9.57 E-06	8.72 E-01	8.34 E-06
Am-241	3.19 E-08	2.62 E+02	8.35 E-06
		TOTAL DOSE:	1.91 E-05

12.0 FACILITY LIFETIME (Requirement 17)

Environmental cleanup efforts on the Hanford Site are ongoing. The lifetime of the PTRAEUs depends on usage. Estimated lifetime of the PTRAEUs ranges from 5 to 10 years, depending on type.

13.0 TECHNOLOGY STANDARDS (Requirement 18)

The potential TEDE received by the offsite hypothetical highest receptor, resulting from the proposed operations at each of the subject fugitive emission units, is less than 0.1 millirem per year. Therefore, control technology standards listed under WAC 246-247-110(18) must be met, as applicable and to the extent justified by a cost/benefit evaluation. Table 6 summarizes the extent to which the control technology standards are met.

Table 6. Control Technology Standards.

Standard	Does design comply	Comment
ASME/ANSI AG-1	Yes	
ASME/ANSI N509	No	
ASME/ANSI N510	Yes	
Nuclear Air Cleaning Handbook	Yes	
ACGIH 1988	Yes	
ANSI/ASME NQA-1	No	10 CFR 830.120 (quality assurance rule)
ANSI N13.1	No	Required for NESHAPs monitoring, therefore are not applicable
40 CFR 60, Appendix A Test methods: 1, 1A	No	Required for NESHAPs monitoring, therefore are not applicable
40 CFR 60, Appendix A Test methods: 2, 2A, 2C, 2D	No	Required for NESHAPs monitoring, therefore are not applicable
40 CFR 60, Appendix A Test methods: 4	No	Required for NESHAPs monitoring, therefore are not applicable
40 CFR 60, Appendix A Test methods: 5, 17	No	Required for NESHAPs monitoring, therefore are not applicable

14.0 DISCUSSION OF BEST AVAILABLE RADIONUCLIDE CONTROL TECHNOLOGY

It is proposed that the HEPA filtration systems, as described in Section 8.0 of the NOC, be approved as the best available radionuclide control technology (BARCT) for the PTRAEUs. The DOH has stated that HEPA filters generally are accepted as BARCT for particulate radionuclide air emissions. HEPA filter units have been used extensively on the Hanford Site to control particulate radionuclide air emissions.

15.0 REFERENCES

DOE/RL-96-37, *Radionuclide Air Emissions Report for the Hanford Site, Calendar Year 1995*, U.S. Department of Energy, Richland Operations Office, Richland, Washington.

WHC 1991, *Unit Dose Calculation Methods Summary of Facility Effluent Monitoring Plan Determinations*, WHC-EP-0498, Westinghouse Hanford Company, Richland, Washington.

APPENDIX A

SCHEMATICS AND DRAWINGS "TYPICAL SAMPLE PREPARATION" UNIT

This page intentionally left blank.

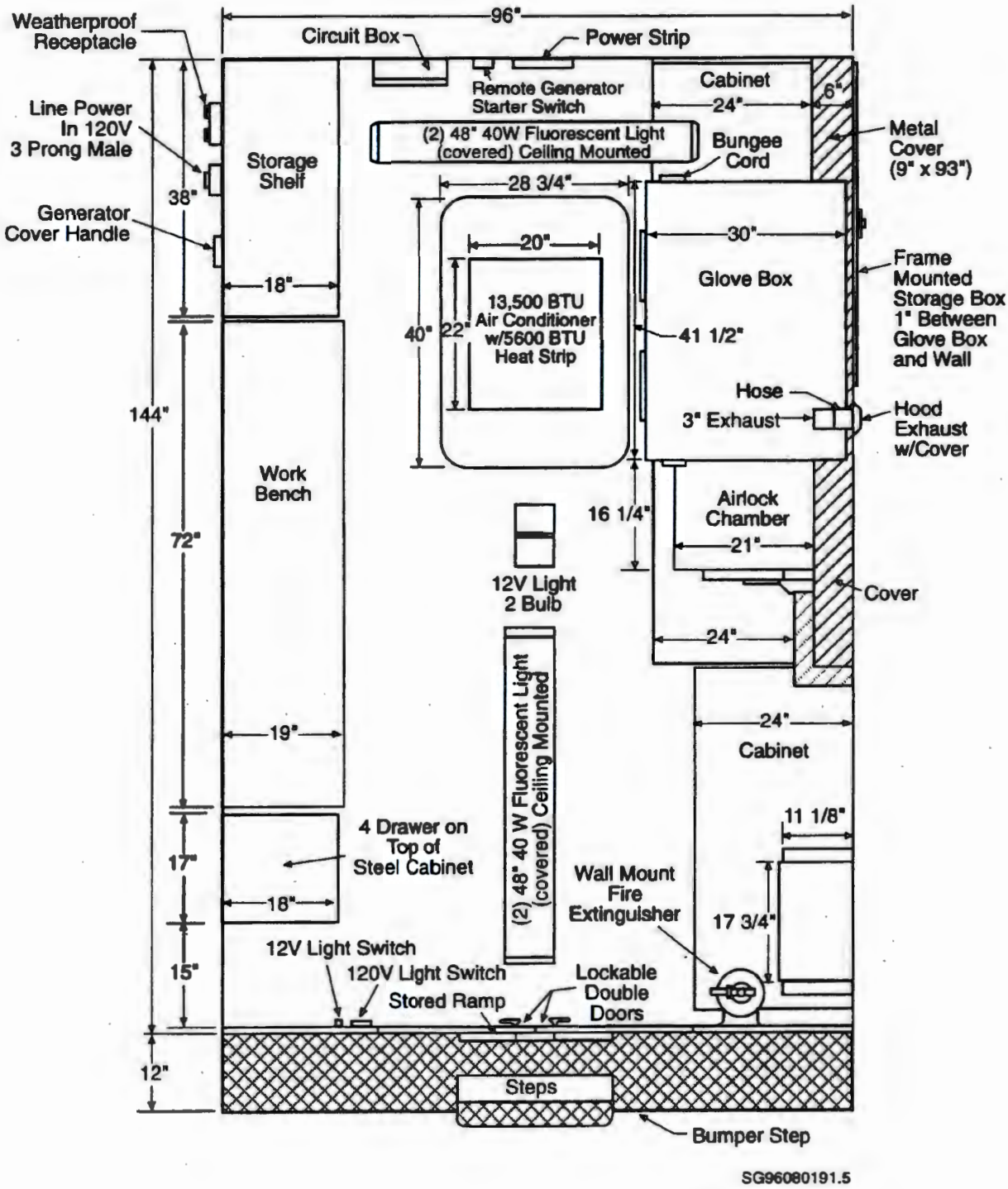

Figure 1. Plan View.

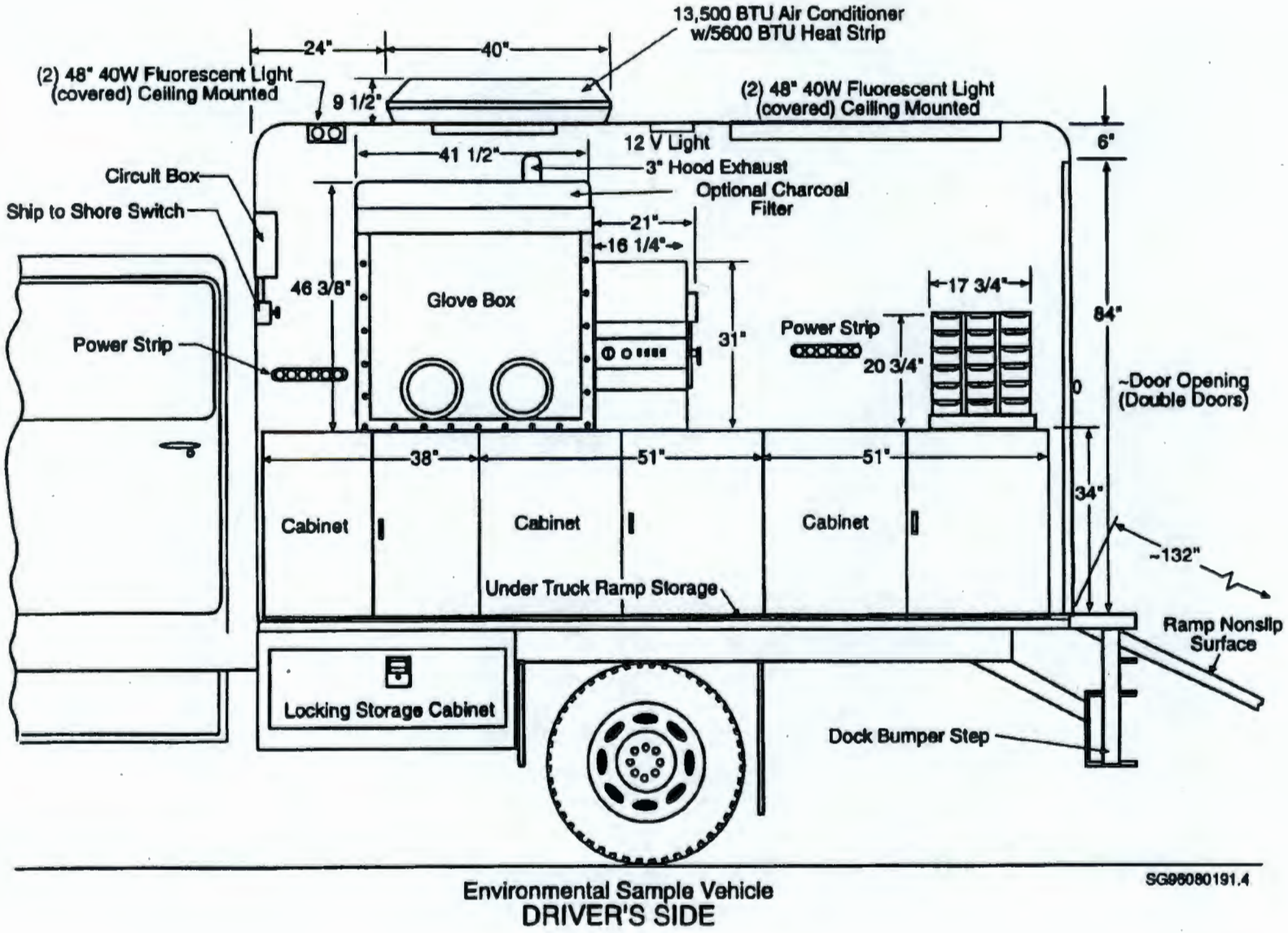

Environmental Sample Vehicle
DRIVER'S SIDE

Figure 2. Environmental Sample Vehicle, Driver Side.

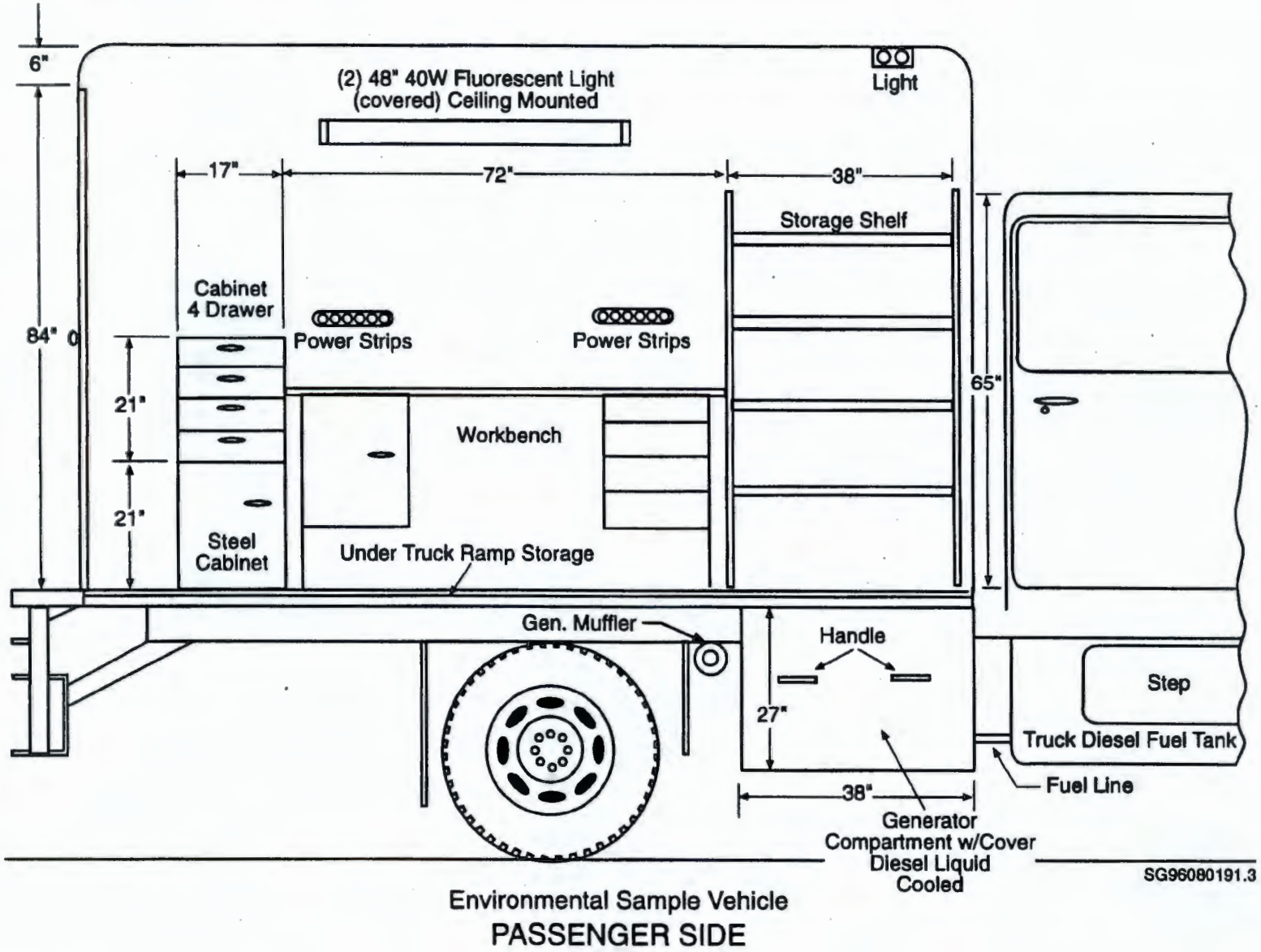

Figure 3. Environmental Sample Vehicle, Passenger Side.

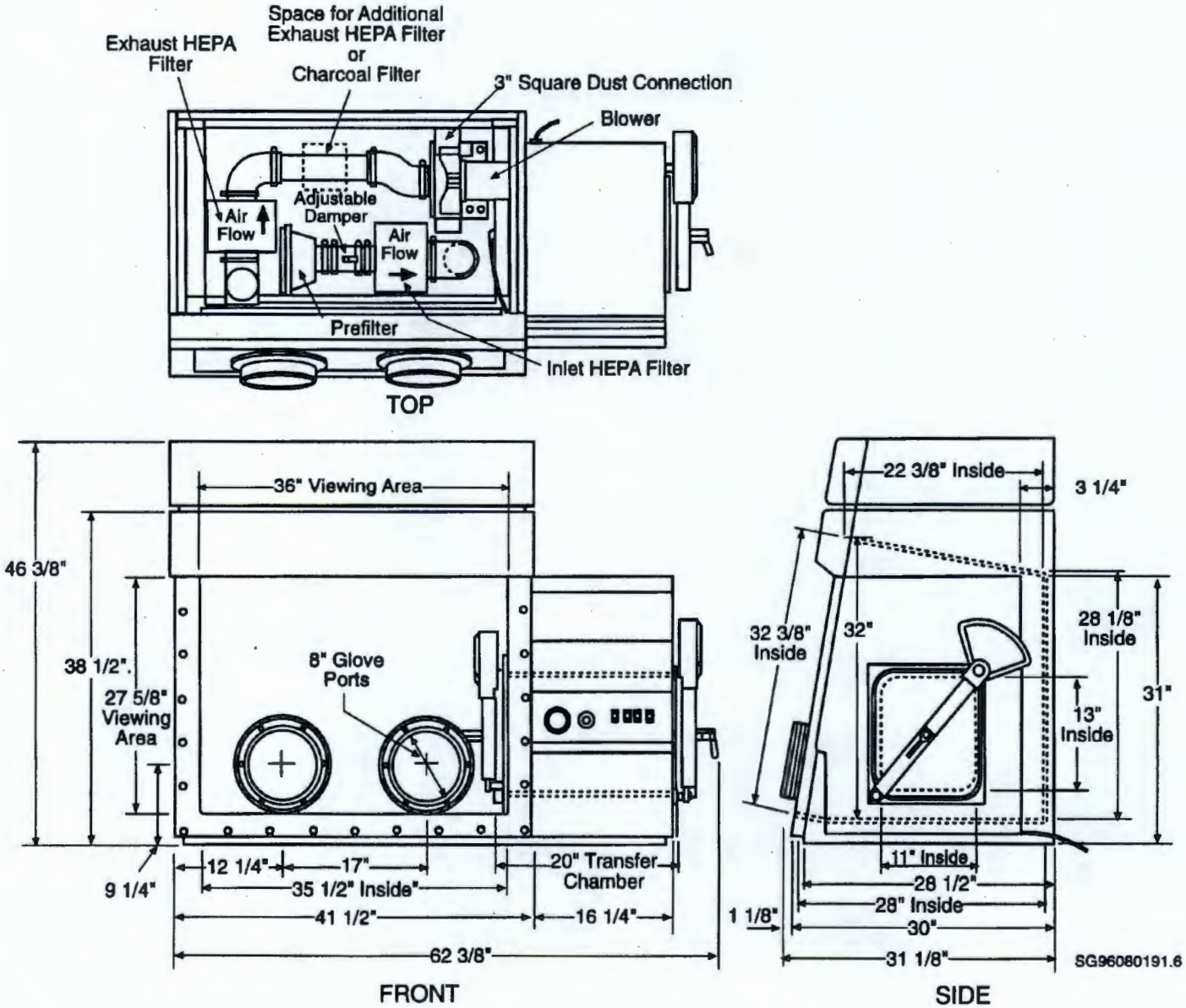

Figure 4. Hood.

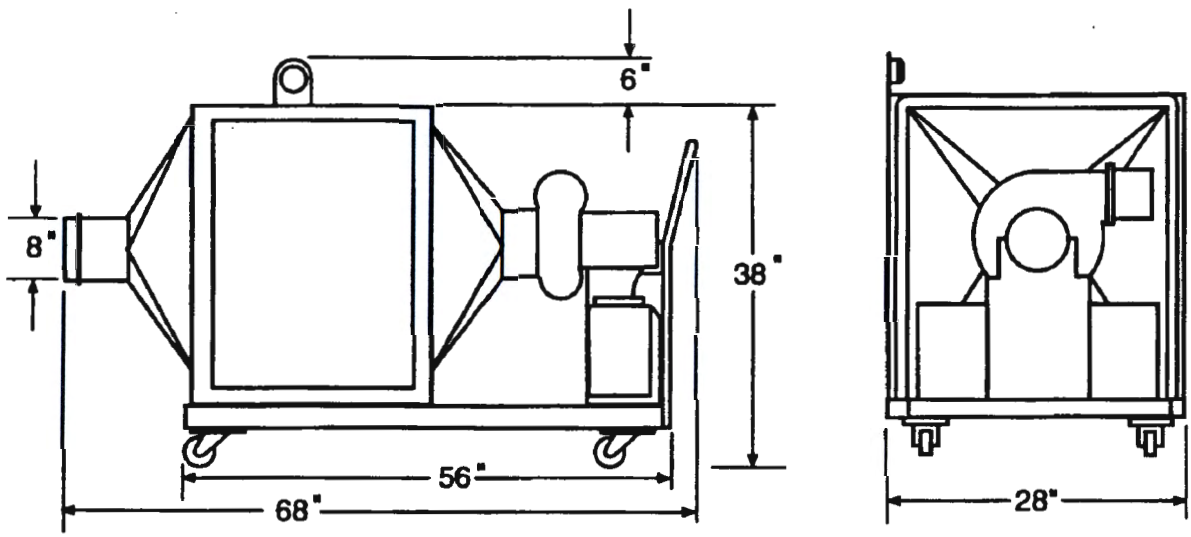

SG96080191.1

Figure 5. Portable Filtration Unit.

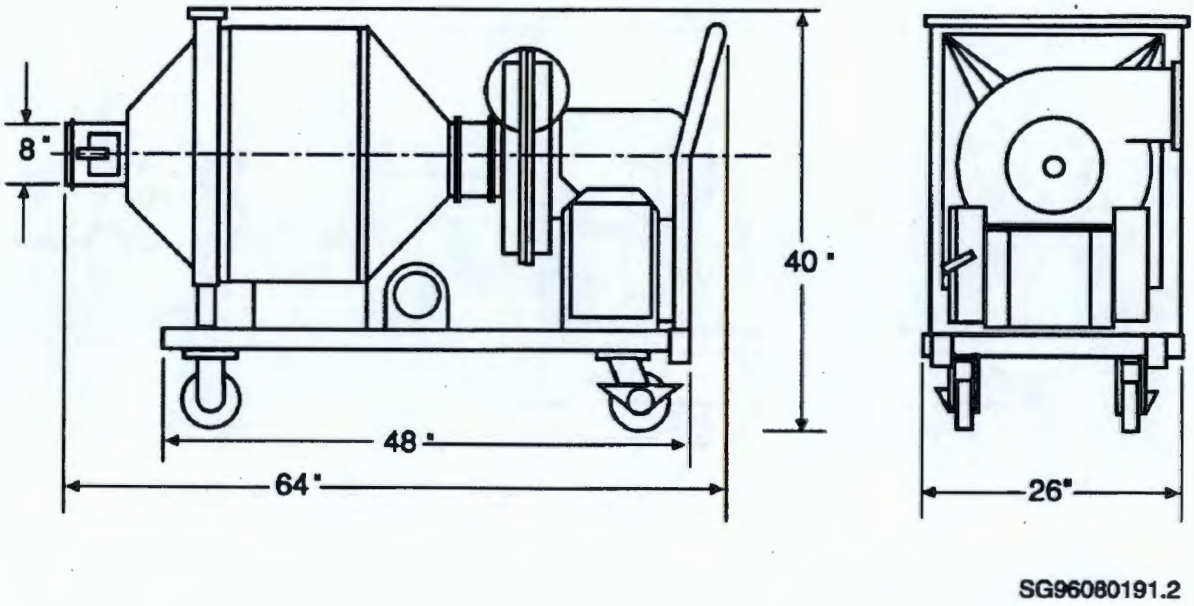

Figure 6. Portable Filter/Blower Unit.

APPENDIX B

RADIOACTIVE HANDLING LIMITS

This page intentionally left blank.

TABLES OF DAILY RADIOACTIVITY HANDLING LIMITS

Curies per Day

Based on the following release assumptions:

Handling processes release 1 E-03 (emission fraction) to the effluent treatment system.

Exceptions are the inert gases (Ar, Kr, Xe, Rn), tritium, ruthenium, and iodine compounds, which are assumed to be 100 percent released, and are not filtered by the effluent treatment system.

Additional Considerations are the following:

Portable ventilation-filter systems in use for more than 1 day must increase the handling limits shown on these tables according to the number of days of operations.

Sealed sources (no potential for release) need not be considered in the evaluation.

Heating above the boiling point of water will increase the release fractions. If materials will be heated to 100°C or more, the handling amounts must be reduced by a factor of 1,000. Exceptions are the inert gases, and tritium, ruthenium, and iodine compounds, which already include the factor of 1,000.

Accomplish the following:

1. Determine the source term to be handled during the activity

2. Determine the length of operations for the activity in days

3. Divide step 1 by step 2 to obtain curies per day

4. Divide step 3 by the RHL for each radionuclide and add up the sum of the ratios. If less than 1, proceed under the NOC. Include all radionuclides in the potential-to-emit that could contribute 10% of the TEDE to the MEI

5. Comply with all assumptions of this NOC and this appendix.

Table B-1. Handling Limits (curies per day) for 100-B, -C, -K, -N, and -D Areas.

Nuclide	Ground level	Nuclide	Ground level
*H-3	8.2 E+00	*I-132	1.1 E+01
C-14	6.8 E+01	*I-133	1.6 E+00
Na-22	9.6 E+00	*I-135	4.6 E+00
Na-24	1.3 E+03	*Xe-133	3.6 E+02
*Ar-41	1.9 E+01	*Xe-135	5.8 E+01
Cr-51	2.9 E+03	Cs-134	5.9 E+00
Mn-54	3.4 E+01	Cs-135	8.6 E+01
Mn-56	7.7 E+03	Cs-137	7.8 E+00
Fe-59	5.8 E+01	Cs-138	3.8 E+04
Co-58	5.8 E+01	Ba-140	1.5 E+02
Co-60	6.4 E+00	La-140	6.1 E+02
Ni-63	9.1 E+02	Ce-141	2.3 E+02
Zn-65	2.0 E+01	Ce-144	1.4 E+01
As-76	1.5 E+03	Pm-147	1.6 E+02
*Kr-85m	1.0 E+02	Sm-153	2.4 E+03
*Kr-85	3.7 E+03	Eu-152	1.2 E+01
*Kr-87	3.8 E+01	Eu-154	1.0 E+01
*Kr-88	8.8 E+00	Eu-155	1.0 E+02
Sr-85	2.1 E+01	Ra-226	3.4 E-01
Sr-89	8.8 E+01	Th-230	3.3 E-02
Sr-90	4.2 E+00	Th-232	2.3 E-02
Sr-91	5.1 E+03	U-233	5.7 E-02
Zr-95	7.0 E+01	U-234	5.8 E-02
Nb-94	7.2 E+00	U-235	6.3 E-02
Nb-95	1.1 E+02	U-236	6.2 E-02
Mo-99	1.1 E+03	U-238	6.5 E-02
Tc-99	1.7 E+02	Np-237	1.6 E-02
*Ru-103	1.3 E-01	Np-239	1.6 E+03
*Ru-106	8.9 E-03	Pu-238	2.3 E-02
Sn-113	1.6 E+02	Pu-239	2.1 E-02
Sb-124	3.1 E+01	Pu-240	2.1 E-02
Sb-125	4.5 E+01	Pu-241	1.3 E+00
Sn-126	2.2 E+01	Am-241	1.4 E-02
Te-132	4.4 E+02	Cm-242	1.4 E-02
*I-125	6.1 E-02	Am-243	4.4 E-01
*I-129	8.6 E-04	Cm-244	2.7 E-02
*I-131	1.5 E-02		

* Inert gases--the use of other control equipment may be required; contact appropriate organization to determine permitting needs.

Table B-2. Handling Limits (curies per day) for 100-F and -H Areas.

Nuclide	Ground level	Nuclide	Ground level
*H-3	5.3 E+00	*I-132	7.2 E+00
C-14	4.4 E+01	*I-133	1.0 E+00
Na-22	6.2 E+00	*I-135	3.0 E+00
Na-24	8.1 E+02	*Xe-133	2.3 E+02
*Ar-41	1.3 E+01	*Xe-135	3.8 E+01
Cr-51	1.9 E+03	Cs-134	3.9 E+00
Mn-54	2.2 E+01	Cs-135	5.6 E+01
Mn-56	5.0 E+03	Cs-137	5.0 E+00
Fe-59	3.8 E+01	Cs-138	2.5 E+04
Co-58	3.7 E+01	Ba-140	9.6 E+01
Co-60	4.2 E+00	La-140	4.0 E+02
Ni-63	5.9 E+02	Ce-141	1.5 E+02
Zn-65	1.3 E+01	Ce-144	8.8 E+00
As-76	9.8 E+02	Pm-147	1.1 E+02
*Kr-85m	6.8 E+01	Sm-153	1.6 E+03
*Kr-85	2.4 E+03	Eu-152	7.8 E+00
*Kr-87	2.5 E+01	Eu-154	6.6 E+00
*Kr-88	5.7 E+00	Eu-155	6.5 E+01
Sr-85	1.4 E+01	Ra-226	2.2 E-01
Sr-89	5.7 E+01	Th-230	2.1 E-02
Sr-90	2.8 E+00	Th-232	1.5 E-02
Sr-91	3.3 E+03	U-233	3.7 E-02
Zr-95	4.6 E+01	U-234	3.8 E-02
Nb-94	4.7 E+00	U-235	4.1 E-02
Nb-95	6.8 E+01	U-236	4.0 E-02
Mo-99	7.4 E+02	U-238	4.2 E-02
Tc-99	1.1 E+02	Np-237	1.0 E-02
*Ru-103	8.5 E-02	Np-239	1.0 E+03
*Ru-106	5.8 E-03	Pu-238	1.5 E-02
Sn-113	1.0 E+02	Pu-239	1.4 E-02
Sb-124	2.0 E+01	Pu-240	1.4 E-02
Sb-125	2.9 E+01	Pu-241	8.8 E-01
Sn-126	1.4 E+01	Am-241	9.2 E-03
Te-132	2.8 E+02	Cm-242	9.2 E-03
*I-125	4.0 E-02	Am-243	2.8 E-01
*I-129	5.6 E-04	Cm-244	1.7 E-02
*I-131	9.7 E-03		

* Inert gases--the use of other control equipment may be required; contact appropriate organization to determine permitting needs.

Table B-3. Handling Limits (curies per day) for 200 West Area.

Nuclide	Ground level	Nuclide	Ground level
*H-3	2.0 E+01	Ba-140	3.7 E+02
C-14	1.7 E+02	La-140	1.5 E+03
Na-22	2.4 E+01	Ce-141	5.6 E+02
Cr-51	7.3 E+03	Ce-144	3.4 E+01
Mn-54	8.4 E+01	Pm-147	4.1 E+02
Fe-59	1.4 E+02	Eu-152	3.0 E+01
Co-58	1.4 E+02	Eu-154	2.5 E+01
Co-60	1.6 E+01	Eu-155	2.5 E+02
Ni-63	2.3 E+03	*Rn-220	1.0 E+02
Zn-65	4.9 E+01	Pb-212	1.5 E+02
*Kr-85	8.9 E+03	Bi-212	2.8 E+03
Sr-85	5.3 E+01	Ra-226	8.5 E-01
Sr-89	2.2 E+02	Th-230	8.1 E-02
Sr-90	1.1 E+01	Th-232	5.7 E-02
Zr-95	1.7 E+02	U-233	1.4 E-01
Nb-94	1.8 E+01	U-234	1.4 E-01
Nb-95	2.6 E+02	U-235	1.6 E-01
Tc-99	4.2 E+02	U-236	1.5 E-01
*Ru-103	3.2 E-01	U-238	1.6 E-01
*Ru-106	2.2 E-02	Np-237	3.9 E-02
Sn-113	3.9 E+02	Np-239	4.0 E+03
Sb-124	7.6 E+01	Pu-238	5.8 E-02
Sb-125	1.1 E+02	Pu-239	5.3 E-02
Sn-126	5.4 E+01	Pu-240	5.3 E-02
*I-125	1.7 E-01	Pu-241	3.4 E+00
*I-129	2.4 E-03	Am-241	3.5 E-02
*I-131	4.2 E-02	Am-243	3.5 E-02
Cs-134	1.5 E+01	Cm-242	1.1 E+00
Cs-135	2.1 E+02	Cm-244	6.6 E-02
Cs-137	1.9 E+01		

* Inert gases--the use of other control equipment may be required; contact appropriate organization to determine permitting needs.

Table B-4. Handling Limits (curies per day) for 200 East Area.

Nuclide	Ground level	Nuclide	Ground level
*H-3	1.3 E+01	Ba-140	2.2 E+02
C-14	1.0 E+02	La-140	9.0 E+02
Na-22	1.4 E+01	Ce-141	3.3 E+02
Cr-51	4.3 E+03	Ce-144	2.0 E+01
Mn-54	5.0 E+01	Pm-147	2.4 E+02
Fe-59	8.6 E+01	Eu-152	1.8 E+01
Co-58	8.5 E+01	Eu-154	1.5 E+01
Co-60	9.4 E+00	Eu-155	1.5 E+02
Ni-63	1.3 E+03	*Rn-220	5.7 E+01
Zn-65	2.9 E+01	Pb-212	8.3 E+01
*Kr-85	5.6 E+03	Bi-212	1.0 E+03
Sr-85	3.1 E+01	Ra-226	5.0 E-01
Sr-89	1.3 E+02	Th-230	4.8 E-02
Sr-90	6.3 E+00	Th-232	3.4 E-02
Zr-95	1.0 E+02	U-233	8.5 E-02
Nb-94	1.1 E+01	U-234	8.6 E-02
Nb-95	1.6 E+02	U-235	9.3 E-02
Tc-99	2.5 E+02	U-236	9.1 E-02
*Ru-103	1.9 E-01	U-238	9.6 E-02
*Ru-106	1.3 E-02	Np-237	2.3 E-02
Sn-113	2.3 E+02	Np-239	2.4 E+03
Sb-124	4.6 E+01	Pu-238	3.4 E-02
Sb-125	6.6 E+01	Pu-239	3.2 E-02
Sn-126	3.2 E+01	Pu-240	3.2 E-02
*I-125	6.7 E-02	Pu-241	2.0 E-02
*I-129	9.4 E-04	Am-241	2.1 E-02
*I-131	1.6 E-02	Am-243	2.1 E-02
Cs-134	8.8 E+00	Cm-242	6.5 E-01
Cs-135	1.3 E+02	Cm-244	3.9 E-02
Cs-137	1.1 E+01		

* Inert gases--the use of other control equipment may be required; contact appropriate organization to determine permitting needs.

Table B-5. Handling Limits (curies per day) for the 300 Area.

Nuclide	Ground level	Nuclide	Ground level
*H-3	6.9 E-01	Cs-135	6.4 E+00
C-14	5.8 E+00	Cs-137	5.7 E-01
Na-22	7.1 E-01	Ba-140	1.1 E+01
Cr-51	2.2 E+02	La-140	4.5 E+01
Mn-54	2.5 E+00	Ce-141	1.7 E+01
Fe-59	4.3 E+00	Ce-144	1.0 E+00
Co-58	4.3 E+00	Pm-147	1.2 E+01
Co-60	4.7 E-01	Eu-152	8.9 E-01
Ni-63	6.8 E+01	Eu-154	7.5 E-01
Zn-65	1.5 E+00	Eu-155	7.4 E+00
*Kr-85	2.7 E+02	Ra-226	2.5 E-02
Sr-85	1.6 E+00	Th-230	2.4 E-03
Sr-89	6.5 E+00	Th-232	1.7 E-03
Sr-90	3.1 E-01	U-233	4.3 E-03
Zr-95	5.2 E+00	U-234	4.3 E-03
Nb-94	5.3 E-01	U-235	4.6 E-03
Nb-95	7.8 E+00	U-236	4.6 E-03
Tc-99m	3.8 E+03	U-238	4.8 E-03
Tc-99	1.3 E+01	Np-237	1.2 E-03
*Ru-103	9.7 E-03	Np-239	1.2 E+02
*Ru-106	6.6 E-04	Pu-238	1.7 E-03
Sn-113	1.2 E+01	Pu-239	1.6 E-03
Sb-124	2.3 E+00	Pu-240	1.6 E-03
Sb-125	3.3 E+00	Pu-241	1.0 E-01
Sn-126	1.6 E+00	Am-241	1.0 E-03
*I-125	1.5 E-03	Am-243	1.0 E-03
*I-129	2.1 E-05	Cm-242	3.2 E-02
*I-131	3.7 E-04	Cm-244	2.0 E-03
Cs-134	4.4 E-01		

* Inert gases--the use of other control equipment may be required; contact appropriate organization to determine permitting needs.

Table B-6. Handling Limits (curies per day) for the 400 Area.

Nuclide	Ground level	Nuclide	Ground level
*H-3	9.7 E+00	*Xe-133m	4.8 E+02
C-14	8.1 E+01	*Xe-133	4.2 E+02
Na-22	1.1 E+01	*Xe-135m	2.9 E+02
*Ar-41	1.7 E+01	*Xe-135	6.4 E+01
Cr-51	3.3 E+03	Cs-134	6.6 E+00
Mn-54	3.8 E+01	Cs-135	9.6 E+01
Fe-59	6.5 E+01	Cs-137	8.6 E+00
Co-57	1.7 E+02	Ba-140	1.6 E+02
Co-58	6.4 E+01	La-140	6.8 E+02
Co-60	7.1 E+00	Ce-141	2.5 E+02
Ni-63	1.0 E+03	Ce-144	1.5 E+01
Zn-65	2.2 E+01	Pm-147	1.8 E+02
*Kr-83m	9.2 E+00	Eu-152	1.3 E+01
*Kr-85m	1.1 E+02	Eu-154	1.1 E+01
*Kr-85	4.3 E+03	Eu-155	1.1 E+02
*Kr-87	2.9 E+01	Ra-226	3.8 E-01
*Kr-88	8.4 E+00	Th-230	3.6 E-02
Sr-85	2.4 E+01	Th-232	2.5 E-02
Sr-89	9.8 E+01	U-233	6.4 E-02
Sr-90	4.7 E+00	U-234	6.5 E-02
Zr-95	7.8 E+01	U-235	7.0 E-02
Nb-94	8.0 E+00	U-236	6.9 E-02
Nb-95	1.2 E+02	U-238	7.3 E-02
Tc-99	1.9 E+02	Np-237	1.7 E-02
*Ru-103	1.5 E-01	Np-239	1.8 E+03
*Ru-106	9.9 E-03	Pu-238	2.6 E-02
Sn-113	1.8 E+02	Pu-239	2.4 E-02
Sb-124	3.4 E+01	Pu-240	2.4 E-02
Sb-125	5.0 E+01	Pu-241	1.5 E+00
Sn-126	2.4 E+01	Am-241	1.6 E-02
*I-125	4.2 E-02	Am-243	1.6 E-02
*I-129	5.8 E-04	Cm-242	4.9 E-01
*I-131	1.0 E-02	Cm-244	3.0 E-02
*Xe-131m	1.5 E+03		

* Inert gases--the use of other control equipment may be required; contact appropriate organization to determine permitting needs.

This page intentionally left blank.

APPENDIX C

SAMPLE DATA USED FOR TYPE II AND III UNITS

This page intentionally left blank.

Example Calculation of Expected Maximum Activities

The expected maximum activity calculations in this appendix are for a single PTRAEU, specifically a mobile sample preparation facility and sample screening and analysis facility. This example has been provided to demonstrate the method of calculating the expected maximum activities for cesium-137, strontium-90, and americium-241. Although more than one PTRAEU will be in operation at any time, it is not expected that all PTRAEUs will handle radiologically contaminated media. Each of the PTRAEUs will operate under the same conditions and limitations as specified in this application.

The maximum soil concentrations in cribs located north of the 241-BY Tank Farm were determined in the following manner. The total activity discharged to the crib was taken from the Waste Information Data System and decayed to 1989. The soil volumes were conservative assumptions to determine the potential maximum soil concentrations. The assumptions for these soil volumes are as follows. The total activity was divided by the soil volume to determine the potential maximum soil concentration.

Table C-1. Soil Concentrations of Radionuclides Within Specified Cribs.

Crib ID number	Soil volume (cubic meters)	Total activity discharged to the crib (decayed to 1989) (curies)			Soil concentration (microcuries per cubic centimeter)		
		Sr-90	Cs-137	Am-241	Sr-90	Cs-137	Am-241
216-B-43	142	574	130	0.0104	4.0 E+00	0.92 E+00	7.3 E-05
216-B-44	142	1200	309	0.311	8.5 E+00	2.2 E+00	2.2 E-03
216-B-45	142	1180	666	0.207	8.3 E+00	4.7 E+00	1.5 E-03
216-B-46	142	631	88.0	0.414	4.4 E+00	0.62 E+00	2.9 E-03
216-B-47	142	261	66.0	0.104	1.8 E+00	0.46 E+00	7.3 E-04
216-B-48	142	547	200	0.104	3.9 E+00	1.4 E+00	7.3 E-04
216-B-49	142	1140	182	0.311	8.0 E+00	1.3 E+00	2.2 E-03
216-B-50	142	3.39	51.2	0.00495	0.02 E+00	0.36 E+00	3.5 E-05
216-B-57	170	1.83	226	0.00387	0.01 E+00	1.3 E+00	2.7 E-05

Assumptions for Contaminated Soil Volumes

Cribs 216-B-43 to 216-B-50

Small cylinder, radius 6.1 meters, thickness 1.2 meters (a worst case to maximize soil concentrations). Soil volume is 142 cubic meters.

Crib 216-B-57

Rectangular slab 4.6 meters wide, 30.5 meters long (half the actual length of the crib, to be conservative), and 1.2 meters thick. Soil volume is 170 cubic meters. This is the smallest reasonable volume of soil where radioactivity has spread.

The total activity expected in the largest sample at the highest soil concentrations (i.e., at Crib 216-B-44 for Sr-90, Crib 216-B-45 for Cs-137, and at Crib 216-B-46 for Am-241) is shown in Table 2. These are the maximum total activities, which were used in the example calculation in Appendix E.

Table C-2. Radionuclide Source Term (curies) in Soil Sample.

Sample type	Largest sample soil volume (cubic centimeters)	Maximum total activity (curies)		
		Sr-90	Cs-137	Am-241
0.61 meter long, 12.7-centimeter diameter	7,722	6.6 E-02	3.6 E-02	2.2 E-05

APPENDIX D

PORTABLE/TEMPORARY RADIONUCLIDE AIRBORNE EMISSION UNIT LISTING

This page intentionally left blank.

HANFORD SITE PORTABLE/TEMPORARY EMISSIONS UNITS

The units listed in this appendix are used and managed by onsite contractors. Headings indicate typical site use and storage locations of the units; however, the units are not limited to those areas and can be used anywhere on the Hanford Site in accordance with the terms and conditions of the NOCs.

Unit	Number of units	Identification number	Flow rate (cubic feet per minute)	Uses	Characteristics
Environmental Restoration Contractor (N Reactor)--					
Type I	1	1P2A078401	176	Greenhouse ventilation	HEPA filter; 99.97% efficiency
Environmental Restoration Contractor (all others)--					
Type I	1	0050979	500-2,000	Ventilation	1 prefilter; 1 secondary filter: HEPA filter; 1.5 horsepower electric motor (110 VAC); flow rate indicator (magnehelic); audible low flow alarm at 2.5 inches water pressure gauge
Type I	1	B55220	2,000	Ventilation	HEPA filter; 99.97% efficiency
Type I	1	2399	3,000	Ventilation	HEPA filter; 99.97% efficiency
Type I	1	2579	3,000	Ventilation	HEPA filter; 99.97% efficiency

	Unit	Number of units	Identification number	Flow rate (cubic feet per minute)	Uses	Characteristics
1	Environmental Engineering (B Plant Complex)--					
2	Type I	1	PO 6-4409 72-1A	1,650	Asbestos removal or prevention of contamination spread at B Plant Complex of Waste Encapsulation and Storage Facility[1] (WESF)	HEPA filter D/P--1.2 inches water column 99.97% efficiency at 0.3 micron
3	Type I	1	9042015-020	125	WESF ion exchange clean out. Also use will include prevention of contamination spread at B Plant Complex or WESF.	HEPA filter 99.97% efficiency at 0.3 microns
4	300 Area Support Service--					
5	Type I	1	9470005	77	Asbestos abatement	HEPA filter that removes 99.999% of all particles of 0.3 micron size or larger with a 4-gallon collection bag
6	Type I	1	9500011	77	Vacuuming[1]	HEPA filter that removes 99.999% of all particles of 0.3 micron size or larger with a 4-gallon collection bag

	Unit	Number of units	Identification number	Flow rate (cubic feet per minute)	Uses	Characteristics
1	Type I	1	3440009	77	Vacuuming[1]	HEPA filter that removes 99.999% of all particles of 0.3 micron size or larger with a 4-gallon collection bag
2	Type I	1	12632	1,000	Air flow control and negative pressure or confinements for radiological control	HEPA filter; D/P--1.05[4] water column
3	Regulatory Compliance (PUREX Facility)--					
4	Type I	1	MT 201	1,089	Asbestos removal	HEPA filter; D/P--1.2 inches water column 99.99% efficiency at 0.3 micron
5	Type I	1	04167	884	General removal	HEPA filter D/P--1.2 inches water column
6	Type I	1	9900-2000-0845	1,155	Stored in storage gallery (greenhouse)	HEPA filter D/P--2.2 inches water column
7	Type I	1	WB56633	190	Wash and vacuum[1]	HEPA filter 99.97% efficiency at 0.3 micron
8	Type I	1	MT 12724	758	Stored in a power cage (greenhouse)	HEPA filter D/P--1.05 inches water column

Unit	Number of units	Identification number	Flow rate (cubic feet per minute)	Uses	Characteristics
222-S Laboratory Complex--					
Type I	1	1947K31	1,867	Greenhouse (operational September 1993)	HEPA filter 99.95% efficiency at 0.3 micron

[1] Type I units are authorized under the application for air space ventilation operations only. If the vacuum unit is to be used for any other purpose, the acceptable source term/emission estimates must be approved by the DOH before use of the unit for the planned activity.

Unit	Number of units	Identification number	Flow rate (cubic feet per minute)	Uses	Character-istics
Mobile Sample Screening and Analysis Facilities--					
Sampling laboratory--Type III	7	64-5189 (Trailer) 64-4276 (Trailer) 64-4230 (Trailer) 64-4231 (Trailer) 64-4228 (Trailer) 68B4631 (Truck) 68B4626 (Truck)	Air flow quantity will satisfy hood containment velocity of 125 feet per minute inward	Provide work space for nonintrusive media	Chemical hood with HEPA filter and glovebox
Sample preparation--Type II	3	64-4229 (Trailer) 68B4625 (Truck) 68B4630 (Truck)	50	Package samples for onsite or offsite analysis	Glove box to diminish exposure to personnel; HEPA filter followed by charcoal absorbers.

APPENDIX E

EXAMPLE OF A LOG SHEET AND EXAMPLE CALCULATIONS TO DETERMINE MAXIMUM EXPECTED ANNUAL EMISSIONS

This page intentionally left blank.

EXAMPLE: LOG SHEET FOR TRACKING PORTABLE/TEMPORARY RADIOACTIVE AIRBORNE EMISSIONS UNITS FOR THE _____ AREA OF THE HANFORD SITE FOR UNIT NO. _____

Location	Start/stop date and time	Total hours of operation	Purpose of operation	Source type (liquid, gas, solid)	Estimated emissions	Confirmatory measurement(s)	Control equipment

* Attach expected emissions calculations determined using the guidelines in the "Notice for Approval to Construct and Operate Portable/Temporary Radioactive Airborne Emissions Units" (DOE/RL-96-75) and also the actual emissions determined after use of the PTRAEU.

NOTE: This format is recommended for facility use.

MAXIMUM EXPECTED ANNUAL EMISSION CALCULATIONS

The expected annual emissions from operations of PTRAEUs are depend on the number of PTRAEUs operating during the year and the flow rate, source inventory, and duration of the operation of each unit. This appendix outlines conservative annual emissions and dose rates possible for PTRAEUs. The total combined dose from all units of a particular type is presented for informational purposes only. Compliance use will be based on individual unit operations per activity. The total number of units will increase and decrease as needed to support the clean up efforts.

The PTRAEUs listed in Appendix D were divided into the following three general unit types:

- Type I--Ventilation Filter System
- Type II--Mobile Sampling Preparation System
- Type III--Mobile Sampling Screening System.

Annual emissions and dose for the three types were based on RHLs. Type II and III calculations include a demonstration using sampling data from a site on the Hanford Site. The CAP 88 dose conversion factors were based on published data (WHC 1991).

TYPE I PORTABLE/TEMPORARY RADIONUCLIDE AIRBORNE EMISSION UNIT CALCULATIONS

UNIT TYPE I--VENTILATION FILTERED SYSTEMS

A Type I PTRAEU is a portable ventilation filter unit. These units are normally, but not limited to, an exhauster, vacuum, or other device that removes air from an area and draws the air through a HEPA filtration system attached to the unit or a greenhouse, or some other containment area.

Assumptions:

- There are 17 ventilation type PTRAEUs (Appendix A):

Area		Number of PTRAEUs
Operations	All areas	4
N Reactor	100 Area	1
B Plant	200 Area	2
300 Area	300 Area	4
PUREX Facility	200 Area	5
222-S Laboratory Complex	200 Area	1
	TOTAL:	17

- Assume 365 days per year of operation

- 40 CFR 61 Appendix D methodology was applied to the handling limit. This methodology includes a factor of 0.001 to account for the physical state for particulate materials

- The radionuclide cesium-137 was used in the calculation primarily because of its prevalence throughout the Hanford Site. The RHLs are inversely proportional to the dose impact to the MEI; therefore, each radionuclide, at its RHL location (Area as listed by tables), would result in approximately the same offsite dose. Only one radionuclide was used in the calculations for the Type I PTRAEU to demonstrate the application of RHL and their use with this particular type of PTRAEU. If more than one radionuclide is present, the sum of the ratios of the total activity present to the RHL must be less than 1, or the unit will not be able to operate under this application (Section 9.0). It is assumed, for the purpose of estimating annual potential release, that the one radionuclide used in the calculation (cesium-137) has a ratio equivalent to 1.

Radionuclide	Radioactive Handling Limit 300 Area Table Ground Level	CAP 88 Dose Factor 300 Area Table Ground Level
Cs-137	5.7 E-01 Ci per day	4.77 E-01 mrem per year

- Possible offsite unabated dose from the operation of one PTRAEU:

$$\text{Cs-137} : \left[5.7 \times 10^{-01} \frac{\text{Ci}}{\text{day}}\right] \left[365 \frac{\text{days}}{\text{year}}\right] \left(1 \times 10^{-03}\right)$$

$$\left[4.77 \times 10^{-1} \frac{\text{mrem}}{\text{Ci}}\right] = 9.92 \times 10^{-02} \frac{\frac{\text{mrem}}{\text{year}}}{\text{PTRAEU}} .$$

- Possible offsite unabated dose for all 17 Type I PTRAEUs:

$$\left(17 \text{ PTRAEU}\right) \left[9.92 \times 10^{-02} \frac{\frac{\text{mrem}}{\text{year}}}{\text{PTRAEU}}\right] = 2.67 \times 10^{+00} \frac{\text{mrem}}{\text{year}} .$$

- All remaining information regarding emissions and abated dose are found in Tables 1 through 5 of the NOC.

This is an example of calculating some of the information. All other information is self-explanatory according to the tables and information contained within.

SUMMARY

The annual unabated dose depends on the number of units operating, the duration of the operation and the source inventory. The approach to calculate expected annual unabated dose utilized very conservative assumptions. The assumptions were based on all listed units operating 365 days per year. In actual operations, all Type I PTRAEUs would not be operating for that duration. An additional conservatism built into this calculation is the Type I PTRAEUs will each handle the maximum allowable inventory each of the 365 days (assumed) of operation. Based on these two conservative factors, the actual annual unabated dose is expected to be much less than the calculated potential annual unabated dose.

TYPE II PORTABLE/TEMPORARY RADIONUCLIDE AIRBORNE EMISSION UNIT CALCULATIONS

UNIT TYPE II--MOBILE SAMPLING PREPARATION LABORATORIES

The Mobile Sampling Preparation Laboratories are mounted on trucks and are used when conducting field sampling to provide worker safety and protection from the environment. These laboratories contain normal work space, plus areas to handle radioactive soil samples. Most handling activities consist of, but are not limited to, manipulating the samples for analysis through such activities as removing the sample from core barrels, homogenizing the material (mixing), and filling sample containers.

Assumptions

- Up to 100 samples per year will be analyzed in each Mobile Sampling Preparation Laboratory
- There are three Mobile Sampling Preparation Laboratories (Appendix A)
- Based on the calculations provided for a Type I PTRAEU, 9.92 E-02 is the potential maximum offsite unabated dose based on the RHL
- Annual potential offsite unabated dose for all Type II PTRAEUs is as follows:

$$(3\ \text{PTRAEU})\left[9.92 \times 10^{-02}\ \frac{\frac{\text{mrem}}{\text{year}}}{\text{PTRAEU}}\right] = 2.97 \times 10^{-01}\ \frac{\text{mrem}}{\text{year}}.$$

The following is a calculation of the annual potential unabated dose based on historical sampling data at a site on the Hanford Site:

- The number of samples are multiplied by the maximum Curies documented from total activity expected in a soil sample. Refer to Appendix C, Table C-2.

Nuclide	RHLs	Sampling data	Dose factor
AM-241	1.0 E-03	2.2 E-05	2.62 E+02
CS-137	5.7 E-01	3.6 E-02	4.77 E-01
Sr-90	3.1 E-01	6.6 E-02	8.72 E-01

- Determine the sum of the ratios for multiple radionuclides. If less than 1, determine annual potential unabated dose as follows:

$$\text{Am-241: } \left[100\frac{\text{samples}}{\text{year}}\right]\left[2.2 \times 10^{-05}\frac{\text{Ci}}{\text{sample}}\right] = 2.2 \times 10^{-03}\frac{\text{Ci}}{\text{year}}$$

$$\text{Cs-137: } \left[100\frac{\text{samples}}{\text{year}}\right]\left[3.6 \times 10^{-02}\frac{\text{Ci}}{\text{sample}}\right] = 3.6\ \frac{\text{Ci}}{\text{year}}$$

$$\text{Sr-90: } \left[100\frac{\text{samples}}{\text{year}}\right]\left[6.6 \times 10^{-02}\frac{\text{ci}}{\text{sample}}\right] = 6.6\ \frac{\text{Ci}}{\text{year}}$$

$$\sum \text{ of the ratio:}$$

$$\frac{\left[2.2 \times 10^{-3}\frac{\text{Ci}}{\text{year}}\right]}{\left[1.0 \times 10^{-03}\frac{\text{Ci}}{\text{day}}\right]\left[365\frac{\text{day}}{\text{year}}\right]} + \frac{\left[3.6\frac{\text{Ci}}{\text{year}}\right]}{\left[5.7 \times 10^{-01}\frac{\text{Ci}}{\text{day}}\right]\left[365\frac{\text{days}}{\text{year}}\right]}$$

$$+ \frac{\left[6.6\frac{\text{Ci}}{\text{year}}\right]}{\left[3.1 \times 10^{-01}\frac{\text{Ci}}{\text{day}}\right]\left[365\frac{\text{day}}{\text{year}}\right]} = 8.16 \times 10^{-02}\ .$$

- Because the sum of the ratios is less than 1, determine annual unabated dose as follows:

$$\text{Am-241: } \left[100\frac{\text{samples}}{\text{year}}\right]\left[2.2 \times 10^{-05}\frac{\text{Ci}}{\text{sample}}\right]\left(1 \times 10^{-03}\right)$$

$$\left[2.62 \times 10^{+02}\frac{\text{mrem}}{\text{Ci}}\right] = 5.76 \times 10^{-04}\frac{\text{mrem}}{\text{year}}\ .$$

$$\text{CS-137: } \left[100\frac{\text{samples}}{\text{year}}\right]\left[3.6 \times 10^{-02}\frac{\text{Ci}}{\text{sample}}\right]\left(1 \times 10^{-03}\right)$$

$$\left[4.77 \times 10^{-01}\frac{\text{mrem}}{\text{Ci}}\right] = 1.72 \times 10^{-03}\frac{\text{mrem}}{\text{year}} .$$

$$\text{Sr-90: } \left[100\frac{\text{samples}}{\text{year}}\right]\left[6.6 \times 10^{-02}\frac{\text{Ci}}{\text{sample}}\right]\left(1 \times 10^{-03}\right)$$

$$\left[8.72 \times 10^{-01}\frac{\text{mrem}}{\text{Ci}}\right] = 5.76 \times 10^{-03}\frac{\text{mrem}}{\text{year}} .$$

- Annual potential offsite unabated dose from the operation of one Mobile Sampling Preparation Laboratory, using sampling data to determine annual potential dose.

$$\left[5.76 \times 10^{-04}\frac{\text{mrem}}{\text{year}}\right] + \left[1.72 \times 10^{-03}\frac{\text{mrem}}{\text{year}}\right] + \left[5.76 \times 10^{-03}\frac{\text{mrem}}{\text{year}}\right]$$

$$= 8.06 \times 10^{-03}\frac{\text{mrem}}{\text{year}} .$$

- Annual potential offsite unabated dose for all three Mobile Sampling Preparation Laboratories is as follows:

$$(3\text{PTRAEUs})\left[8.06 \times 10^{-03}\frac{\frac{\text{mrem}}{\text{year}}}{\text{PTRAEU}}\right] = 2.41 \times 10^{-02}\frac{\text{mrem}}{\text{year}} .$$

- All remaining information regarding emissions and abated dose are found in the NOC application Tables 1 through 5. This is an example of calculating some of the information. All other information is self-explanatory according to the tables and information contained within.

SUMMARY

The annual unabated dose depends on the number of units operating, the duration of the operation, and the source inventory. The approach to calculate expected annual unabated dose used very conservative assumptions. The assumptions were based on all listed units operating 365 days per year. In actual operations, all Type II PTRAEUs would not be operating for that duration. An additional conservatism built into this calculations is the Type II PTRAEUs will each handle the maximum allowable inventory each of the 365 days (assumed) of operation. Based on these two conservative factors, the actual annual unabated dose is expected to be much less than the calculated potential annual unabated dose.

TYPE III PORTABLE/TEMPORARY RADIONUCLIDE AIRBORNE EMISSION UNIT CALCULATIONS

UNIT TYPE III--MOBILE SAMPLING SCREENING LABORATORIES

The Mobile Sampling Screening Laboratory is used when conducting field sampling to provide worker safety and protection from the environment.

Assumptions

- Up to 1,100 samples per year will be analyzed in the Mobile Sampling Screening Laboratory
- There are seven Mobile Sampling Screening Laboratories (Appendix A)
- Based on the calculations provided for a Type I PTRAEU, 9.92 E-02 is the potential maximum offsite unabated dose based on the RHL
- Annual potential offsite unabated dose for all Type III PTRAEUs is as follows.

$$(7\ \text{PTRAEU})\left[9.92 \times 10^{-02}\ \frac{\frac{\text{mrem}}{\text{year}}}{\text{PTRAEU}}\right] = 6.94 \times 10^{-01}\ \frac{\text{mrem}}{\text{year}}\ .$$

The following is a calculation of the annual potential unabated dose based on historical sampling data at a site on the Hanford Site.

- The number of samples are multiplied by the maximum Curies documented from total activity expected in a soil sample. Refer to Appendix C, Table C-2.

Nuclide	RHLs	Sampling Data	Dose Factor
Am-241	1.0 E-03	2.2 E-05	2.62 E+02
Cs-137	5.7 E-01	3.6 E-02	4.77 E-01
Sr-90	3.1 E-01	6.6 E-02	8.72 E-01

- Determine the sum of the ratios for multiple radionuclides; if less than 1 determine annual potential unabated dose as follows:

$$\text{Am-241: } \left[1100\frac{\text{samples}}{\text{year}}\right]\left[2.2 \times 10^{-05}\frac{\text{Ci}}{\text{sample}}\right] = 2.42 \times 10^{-02}\frac{\text{Ci}}{\text{year}}$$

$$\text{Cs-137: } (1100\text{samples})\left[3.6 \times 10^{-02}\frac{\text{Ci}}{\text{sample}}\right] = 3.96 \times 10^{+01}\ \frac{\text{Ci}}{\text{year}}$$

$$\text{Sr-90: } \left[1100\frac{\text{samples}}{\text{year}}\right]\left[6.6 \times 10^{-02}\frac{\text{Ci}}{\text{sample}}\right] = 7.26 \times 10^{+01}\ \frac{\text{Ci}}{\text{year}}$$

$$\sum \text{ of the ratio:}$$

$$\frac{\left[2.42 \times 10^{-02}\frac{\text{Ci}}{\text{year}}\right]}{\left[1.0 \times 10^{-03}\frac{\text{Ci}}{\text{day}}\right]\left[365\frac{\text{day}}{\text{year}}\right]} + \frac{\left[3.96 \times 10^{-01}\frac{\text{Ci}}{\text{year}}\right]}{\left[5.7 \times 10^{+01}\frac{\text{Ci}}{\text{day}}\right]\left[365\frac{\text{days}}{\text{year}}\right]}$$

$$+ \frac{\left[7.26 \times 10^{+01}\frac{\text{Ci}}{\text{year}}\right]}{\left[3.1 \times 10^{-01}\frac{\text{Ci}}{\text{day}}\right]\left[365\frac{\text{day}}{\text{year}}\right]} = 8.98 \times 10^{-01}\ .$$

- Because the sum of the ratios is less than 1, determine annual unabated dose as follows:

$$\text{Am-241: } \left[1100\frac{\text{samples}}{\text{year}}\right]\left[2.2 \times 10^{-05}\frac{\text{Ci}}{\text{sample}}\right](1 \times 10^{-03})$$

$$\left[2.62 \times 10^{+02}\frac{\text{mrem}}{\text{Ci}}\right] = 6.34 \times 10^{-03}\frac{\text{mrem}}{\text{year}}\ .$$

$$\text{Cs-137: } \left[1100\frac{\text{samples}}{\text{year}}\right]\left[3.6 \times 10^{-02}\frac{\text{Ci}}{\text{sample}}\right]\left(1 \times 10^{-03}\right)$$

$$\left[4.77 \times 10^{-01}\frac{\text{mrem}}{\text{Ci}}\right] = 1.89 \times 10^{-02}\frac{\text{mrem}}{\text{year}} .$$

$$\text{Sr-90: } \left[1100\frac{\text{samples}}{\text{year}}\right]\left[6.6 \times 10^{-02}\frac{\text{Ci}}{\text{sample}}\right]\left(1 \times 10^{-03}\right)$$

$$\left[8.72 \times 10^{-01}\frac{\text{mrem}}{\text{Ci}}\right] = 6.33 \times 10^{-02}\frac{\text{mrem}}{\text{year}} .$$

- Annual potential offsite unabated dose from the operation of one Mobile Sampling Screening Laboratory, using sampling data to determine annual potential dose is as follows:

$$\left[6.34 \times 10^{-03}\frac{\text{mrem}}{\text{year}}\right] + \left[1.89 \times 10^{-02}\frac{\text{mrem}}{\text{year}}\right] + \left[6.33 \times 10^{-02}\frac{\text{mrem}}{\text{year}}\right]$$

$$= 8.85 \times 10^{-02}\frac{\text{mrem}}{\text{year}} .$$

- Annual potential offsite unabated dose for all Mobile Sampling Screening Laboratories is as follows:

$$(7\text{PTRAEUs})\left[8.85 \times 10^{-02}\frac{\frac{\text{mrem}}{\text{year}}}{\text{PTRAEU}}\right] = 6.19 \times 10^{-01}\frac{\text{mrem}}{\text{year}} .$$

SUMMARY

The annual unabated dose depends on the number of units operating, the duration of the operation, and the source inventory. The approach to calculate expected annual unabated dose used very conservative assumptions. The assumptions were based on all listed units operating 365 days per year. In actual operations, all Type III PTRAEUs would not be operating for that duration. An additional conservatism built into this calculations is the Type III PTRAEUs will each handle the maximum allowable inventory each of the 365 days (assumed) of operation. Based on these two conservative factors, the

actual annual unabated dose is expected to be much less than the calculated annual potential unabated dose.

DISTRIBUTION

OFFSITE

A. W. Conklin, Head
Air Emissions and Defense Waste Section
Division of Radiation Protection
State of Washington Department of Health
Airdustrial Park Building 5, LE-13
Olympia, Washington 98504-0095

J. Wilkinson
Confederated Tribes of the Umatilla
Indian Reservation
P. O. Box 638
Pendleton, Oregon 97801

D. Powaukee
Nez Perce Tribe
P. O. Box 305
Lapwai, Idaho 80540

R. Jim, Manager
Environmental Restoration/
Waste Management Program
Confederated Tribes and Bands
of the Yakama Nation
P. O. Box 151
Toppenish, Washington 98948

ONSITE

U.S. Department of Energy,	MSIN
Richland Operations Office	
C. M. Bell	A5-52
R. M. Carosino	A4-52
J. E. Rasmussen	A5-15
H. M. Rodriguez (6)	A5-15
Reading Room (2)	H2-53
Bechtel Hanford, Inc.	
E. T. Coenenberg	H9-11
J. T. Hadley	H9-11
J. P. Zoric	X5-57
Boeing Computer Services	
D. J. Farquhar	A1-05
ICF Kaiser Hanford	
B. J. Dixon	B4-20

DISTRIBUTION (cont)

ONSITE		MSIN
	Pacific Northwest National Laboratory	
	Hanford Technical Library	K1-11
	Westinghouse Hanford Company	
	J. M. Barnett	T4-08
	J. A. Bates	H6-36
	R. J. Boom	T6-12
	H. C. Boynton	T4-02
	J. F. Brown	S5-03
	M. D. Campbell	H6-26
	W. E. Davis	H6-20
	J. L. Demarest	G1-40
	L. P. Diediker	H6-36
	T. A. Dillhoff	N2-57
	W. T. Dixon	H6-21
	D. L. Flyckt	S6-71
	D. W. Fritz	H6-36
	C. K. Girres	T3-28
	B. P. Gleckler	H6-36
	E. M. Greager	H6-36
	P. R. Gunter	S5-07
	M. J. Hall	T6-12
	D. L. Johnson	S5-66
	M. J. Hall	T6-12
	S. E. Killoy	S4-66
	J. M. Kisielnicki	L6-39
	G. L. LeBaron	S6-19
	J. J. Luke	H6-25
	C. E. Marple	S4-56
	D. J. McBride	T5-54
	K. M. McDonald	T4-03
	S. E. Myers	S3-24
	A. D. Poor	L6-55
	D. E. Rasmussen	N1-47
	J. R. Robertson	H6-21
	R. W. Szelmeczka	L6-05
	K. S. Tollefson	S7-01
	E. F. Votaw	G1-13
	D. J. Watson	X3-79
	Air Operating Permit File	H6-25
	DPC	A3-94
	EDMC (2)	H6-08