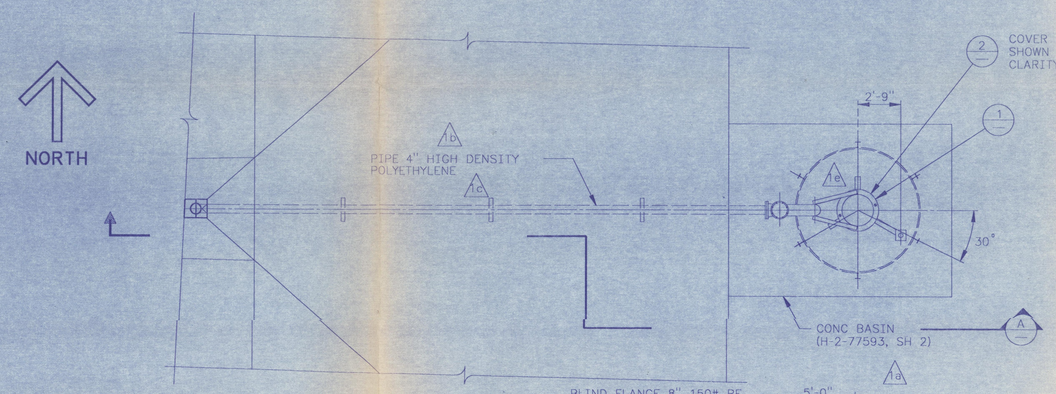

PARTIAL PLAN

SCALE: 1/4"=1'-0" (VAULT NOT SHOWN)

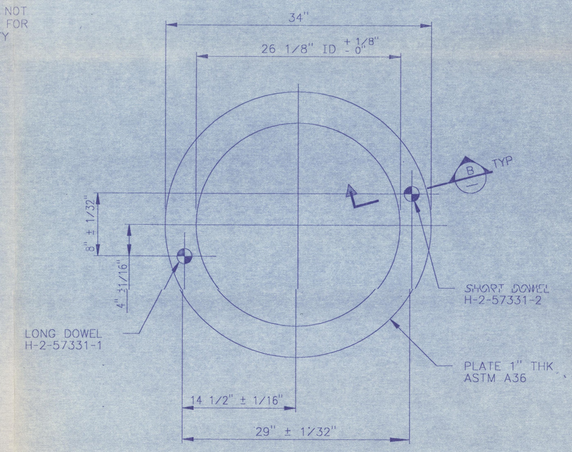

DETAIL 1

SCALE: 1 1/2"=1'-0"

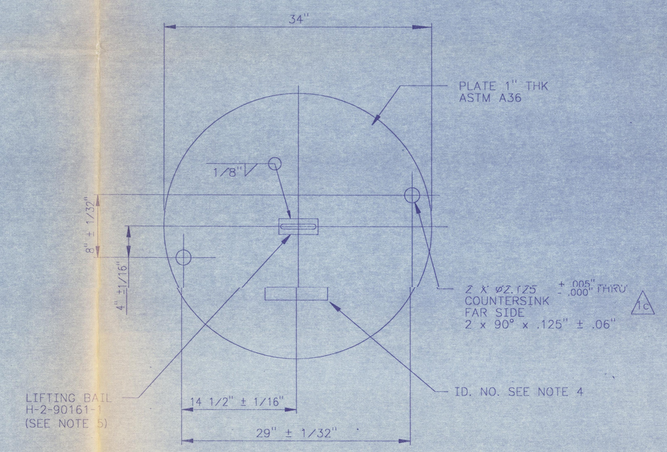

DETAIL 2

SCALE: 1 1/2"=1'-0"

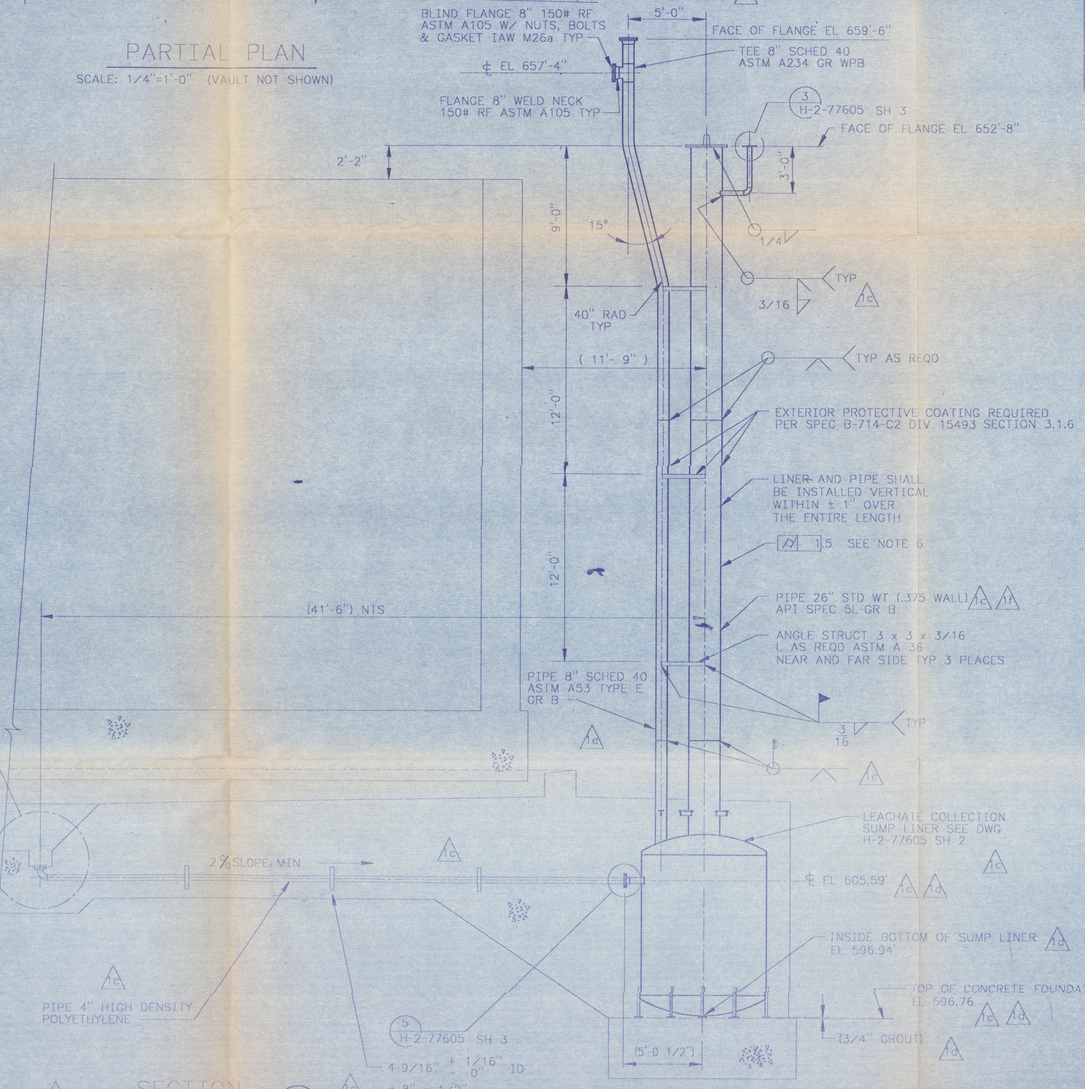

SECTION A

SCALE: 1/4"=1'-0"

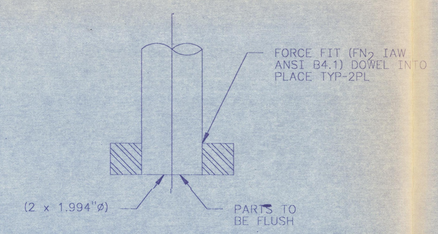

SECTION B

SCALE: 6" = 1'-0"

GENERAL NOTES:

1. ALL PIPING, WELDING, PAINTING, FABRICATION, MATERIALS, CLEANING, AND TESTING SHALL BE IN ACCORDANCE WITH CONSTRUCTION SPEC B-714-C2.
2. BREAK ALL SHARP EDGES AND CORNERS TO A A MINIMUM .010" RADIUS.
3. TOLERANCES (UOS)
   FRACTIONAL = ± 1/8"
   DECIMAL = ± .05
   ANGULAR = ± 1 °
4. IDENTIFY ASSEMBLY IAW HS-BS-0015 TYPE 8, BLACK ON YELLOW, WITH DRAWING AND PART No. IN LOCATION SHOWN, USING 1" HIGH CHARACTERS.
5. TEST LIFTING BAIL PER WHC-CM-6-4.
6. GEOMETRIC TOLERANCE SHOWN, SHALL BE IAW ANSI 14.5M-1982.
7. LEACHATE SUMP SUPPORT SLAB (ZN A5) FOR BASIN 103 ELEVATION AS-BUILT IS 596.56. GROUT SUMP SUPPORT LEGS TO SLAB ELEVATION.

JAN 1991 RECEIVED EDMC

DOES NOT CONTAIN CLASSIFIED OR UNCLASSIFIED CONTROLLED NUCLEAR INFORMATION

REVIEWING OFFICIAL/ADC: [illegible]

DATE: 11-28-90

CHARLES R. JONES STATE OF WASHINGTON 16400 PROFESSIONAL ENGINEER

DRAWING TRACEABILITY LIST		
NUMBER	TITLE	NEXT USED ON
H-2-90161	STANDARD RIGID LIFTING BAILS	
H-2-57331	MECHANICAL EQUIP DETAILS SHORT & LONG DOWELS	
H-2-77573	DRAWING LIST	

REFERENCES

REVISIONS				
REV	DESCRIPTION	REV BY	DATE	BY-DATE
1	GEN. REV; INCORP ALL FCNs	JKL	12-28-90	JKL 12-28-90
	g) B-714-39 ZN B2			
	f) B-714-32 ZN C6			
	e) B-714-23 ZN B6			
	d) B-714-22 ZN A,B5			
	05 E6 E6,7			
9-13	c) B-714-18 ZN A5 B5 C5			
90	b) B-714-16 ZN A7,8 F6,7			
	a) B-714-10 ZN E6			
	THRU B-714-61			

MICROFILMED: BY-DATE — WHC APPROVAL — KEH APPROVAL — COMMENT REVIEW

WHC APPROVAL	DATE
BY SR BRIGGS	12-28-1988
PROJ ENGR JD CLOUD	12-28-1988
DSIGN H. HENRIKSON	12-28-1988
APPROVED BY WJM/RM ITEN	7-25-1988
DRAFT JLH/DK LUNDGREN	7-25-1988
APPROVED BY CRZ/JR COLLINS	7-21-1988
CHECKED BY Wm ZICKUHR	7-18-1988
DRAWN BY DK MILTON	5-3-1988
DESIGNED BY DK MILTON	5-3-1988

CAD FILE: B077605A

CAD CODE: 29:DF-C:ACD2:9,13:NN

IMPACT LEVEL 2 | EDT #101089

U.S. DEPARTMENT OF ENERGY
RICHLAND OPERATIONS OFFICE
KAISER ENGINEERS HANFORD COMPANY

M PIPING

LEACHATE COLL SUMP LINER PLAN, SECT, AND DET

PROJ/SUBSYSTEM: GROUT VAULT PAIR 218-E-15-102 & 103

PROJ	WO	DOB
B-714	ER1060	242500
SCALE	BLDG	INDEX
SHOWN	218-E-15	2500

DRAWING NUMBER H-2-77605 | SHEET 1 | OF 3 | REV 1

KEHCAD 1-48

1 of 3

00124102

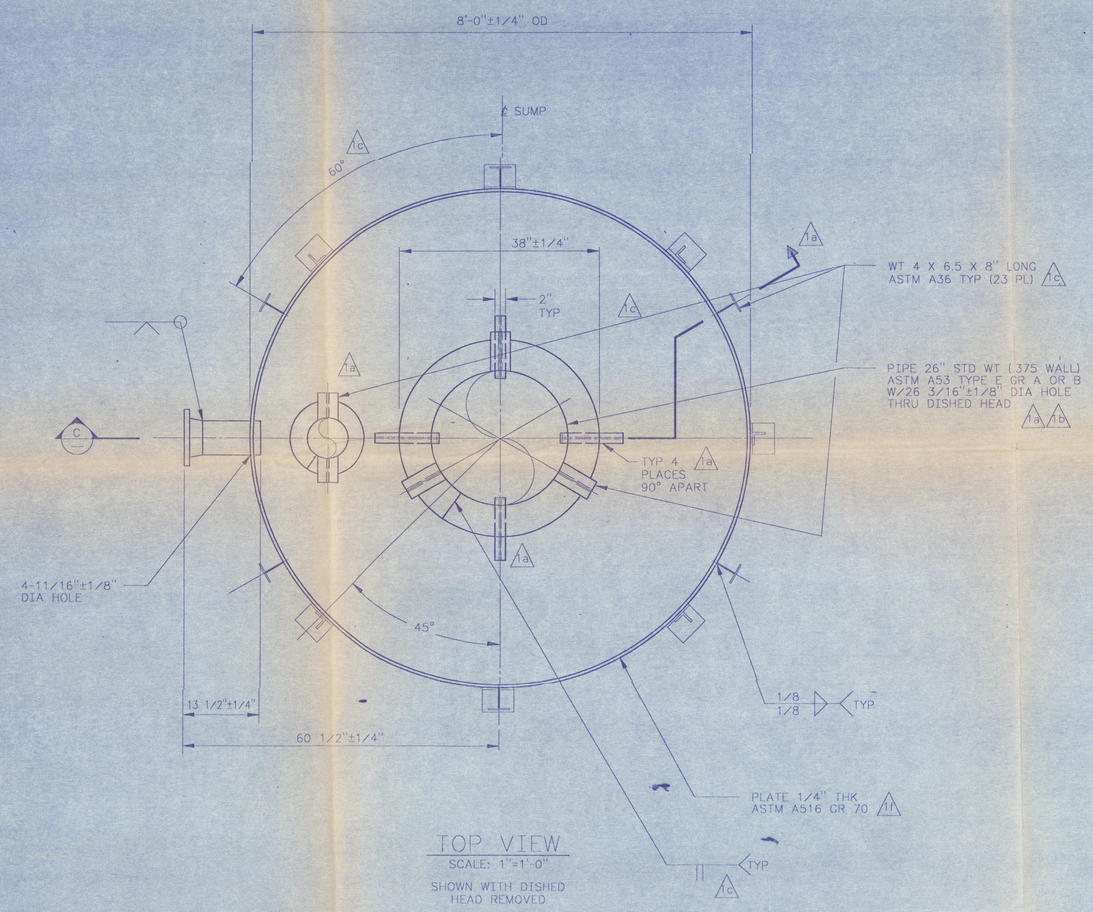

TOP VIEW
SCALE: 1"=1'-0"
SHOWN WITH DISHED HEAD REMOVED

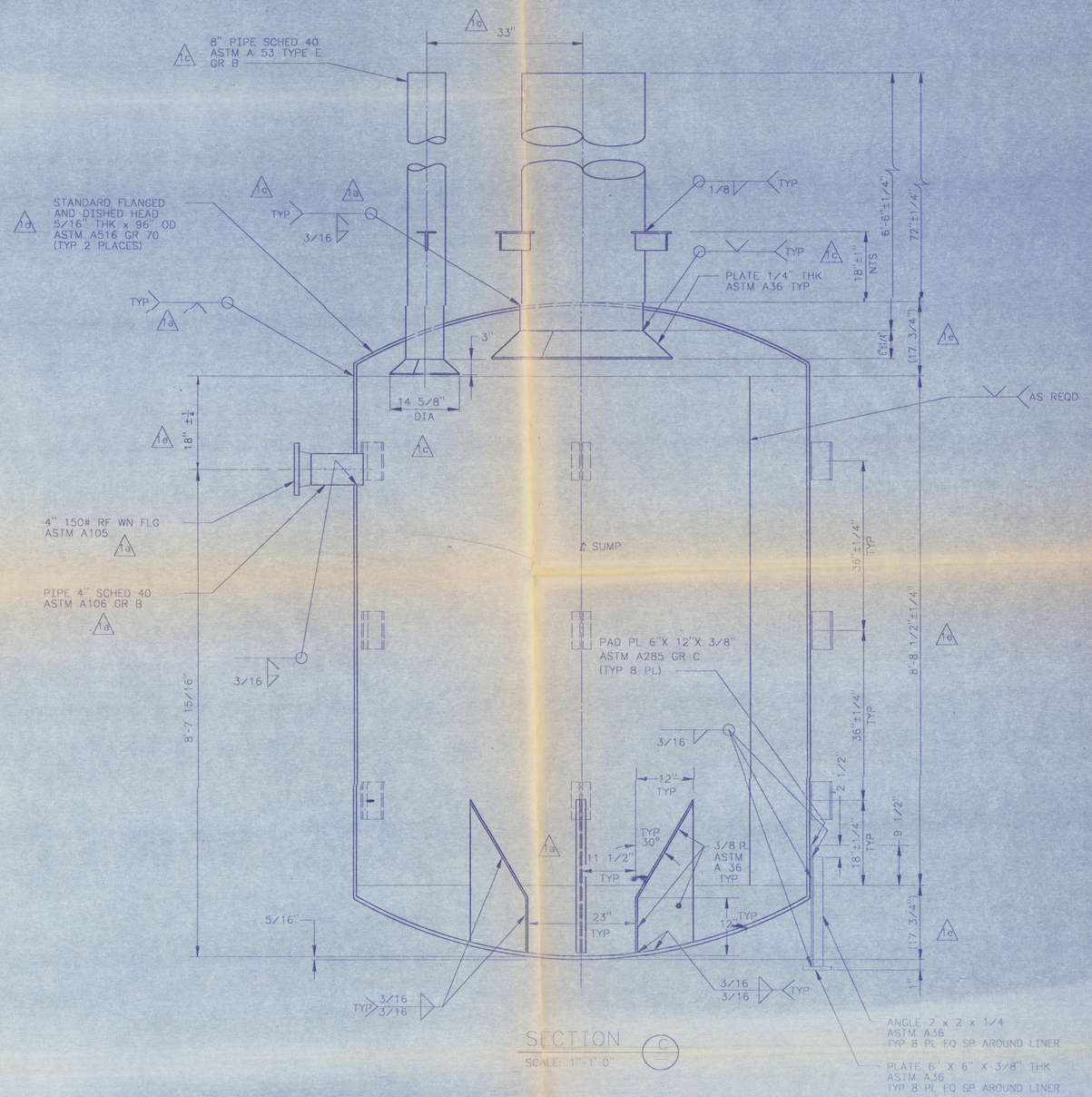

SECTION C
SCALE: 1"=1'-0"

NOTES:

1. FOR GENERAL NOTES SEE SH 1.
2. APPROXIMATE DRY WEIGHT = 4300 LB

CHARLES R. ZOOK — STATE OF WASHINGTON — REGISTERED PROFESSIONAL ENGINEER

DOES NOT CONTAIN CLASSIFIED OR UNCLASSIFIED CONTROLLED NUCLEAR INFORMATION

REVIEWING OFFICIAL/ADC: [signature]
DATE: 11-28-90

NUMBER	TITLE

DRAWING TRACEABILITY LIST

NUMBER	TITLE
H-2-77573	DRAWING LIST

REFERENCES

NEXT USED ON

MICROFILMED	BY-DATE	BY-DATE	REV BY DATE	DESCRIPTION	REV
M	JR Bragg 12/13/90	TDH 12-5-90 / DKL 12-4-90 / RH 12-11-90 / 12-11-90	9-14-90 GD	f) B-714-32 ZN C5 e) B-714-28 ZN C,E1 D1 E4 d) B-714-24 ZN E4 c) B-714-23 ZN C,D6,7 b) B-714-22 ZN D5 E2,4 E7 a) B-714-18 ZN C2,3 D4 D6 THRU B-714-61 GEN REV; INCORP ALL ECNs	RS 1

REVISIONS

COMMENT REVIEW

		DATE
WHC APPROVAL	BY SR BRIGGS	12-28 1988
PROJ ENGR	JD CLOUD	12-28 1988
QA	JE BREED	8-4 1988
APPROVED BY	RMI/EA DUKLETH	8-4 1988
SAFETY	AGM/DK LUNDGREN	8-4 1988
APPROVED BY	CRZ/JRC F PORTER	8-4 1988
CHECKED BY	Wm ZICKUHR	5-20 1988
DRAWN BY	DK MILTON	5-2 1988
DESIGNED BY	DK MILTON	5-2 1988
CAD FILE	B077605B	
CAD CODE	2B:DEC:ACD2:9.13:NN	

IMPACT LEVEL 2 | EDT #101089

U.S. DEPARTMENT OF ENERGY
RICHLAND OPERATIONS OFFICE
KAISER ENGINEERS HANFORD COMPANY

M PIPING
LEACHATE COLL SUMP LINER
TOP VIEW AND SECT

PROJECT TITLE: GROUT VAULT PAIR 218-E-16-102&103

PROJ	WO	JOB
B-714	ER1060	242500

SCALE	BLDG	INDEX
SHOWN	218-E-16	2500

DRAWING NUMBER	SHEET	OF	REV
H-2-77605	2	3	1

KEHCAD 1-12

012492
2 of 3

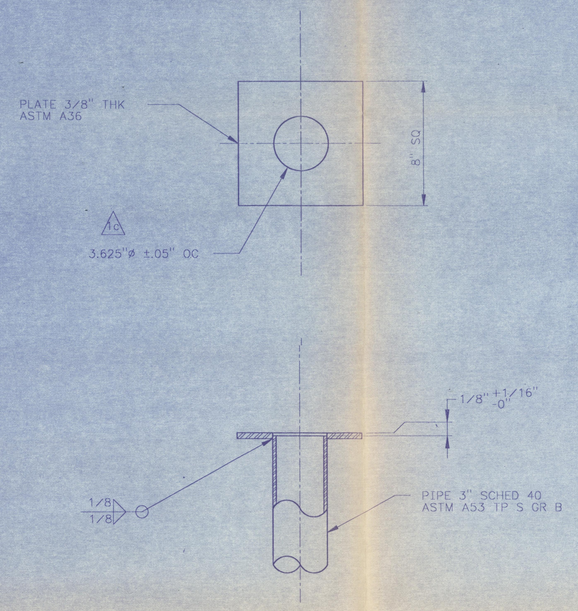

DETAIL 3 H-2-77605 SH 1
SCALE: 3"=1'-0"

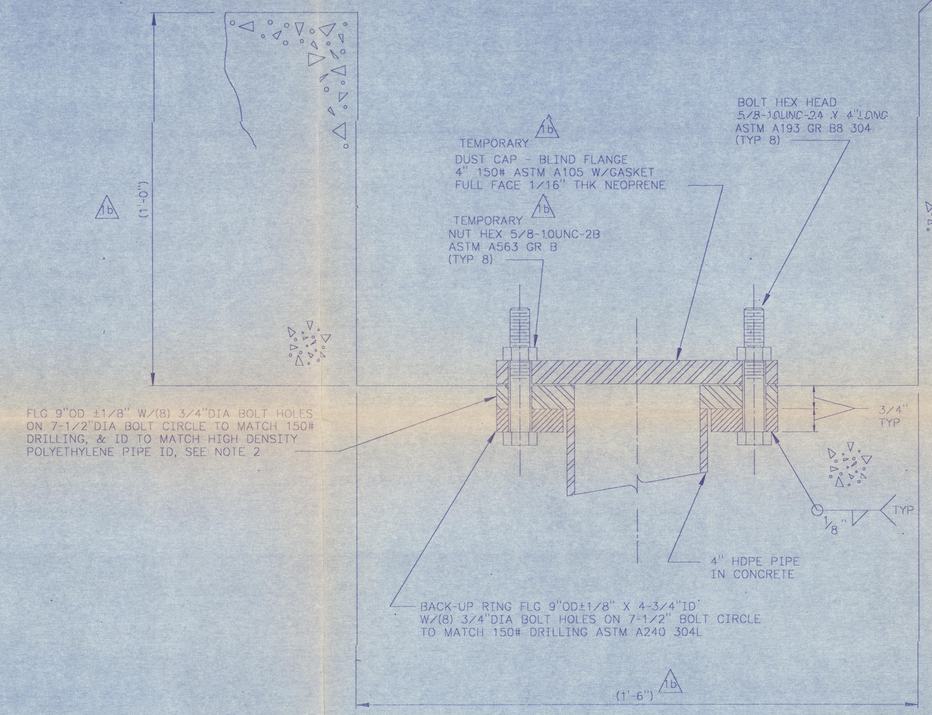

DETAIL 4 H-2-77605 SH 1
SCALE: 6"= 1'-0"

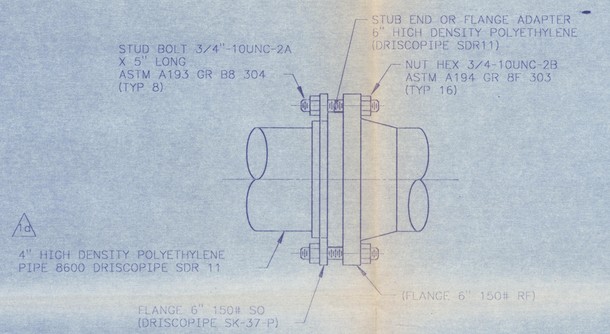

DETAIL 5 H-2-77605 SH 1
SCALE: 3"= 1'-0"

NOTES:

1. FOR GENERAL NOTES, SEE SH 1.
2. INSTALL HIGH DENSITY POLYETHYLENE FLG ASTM D3350 TO PIPE IN ACCORDANCE WITH MANUFACTURE RECOMMENDATIONS.
3. INSTALL BLIND FLANGE DUST COVER DURING CONCRETE POUR. REMOVE AND REPLACE WITH DRAINAGE PIPE.

CHARLES R. JOOS
STATE OF WASHINGTON
PROFESSIONAL ENGINEER

DOES NOT CONTAIN CLASSIFIED OR UNCLASSIFIED CONTROLLED NUCLEAR INFORMATION
REVIEWING OFFICIAL/ADC: [signature]
DATE: 12-28-88

DRAWING TRACEABILITY LIST		REFERENCES	
NUMBER	TITLE	NUMBER	TITLE
		H-2-77573	DRAWING LIST
		NEXT USED ON	

M	BY-DATE	BY-DATE	REV BY DATE	DESCRIPTION	REV
	LR Bump 12/1/90	TDU 12-5-90 / DRH 12-7-90 / DRH 12-11-90 / KLH 12-14-90	9-14 90 GD	c) B-714-32 ZN B8 c) B-714-22 ZN B8 b) B-714-18 ZN B1 C4 E4,5 a) B-714-16 ZN C1 THRU B-714-61 GEN REV: INCORP ALL ECNs	RS 1

REVISIONS

COMMENT REVIEW

		DATE
WHC APPROVAL	BY SR BRIGGS	12-28 1988
PROJ ENGR	JD CLOUD	12-28 1988
QA	H.HENRIKSON	7-29 1988
APPROVED BY	W.JM/RM ITEN	7-27 1988
SAFETY	JLH/DK LUNDGREN	7-21 1988
APPROVED BY	CRZ/JR COLLINS	7-21 1988
DESIGNED BY	Wm ZICKUHR	5-19 1988
DRAWN BY	DK MILTON	5-2 1988
DESIGNED BY	DK MILTON	5-2 1988
CAD FILE	B077605C	
CAD SYSTEM	ZB:DEC:ACD2:9.13:NN	

IMPACT LEVEL 2 | EDT #101089

U.S. DEPARTMENT OF ENERGY
RICHLAND OPERATIONS OFFICE
KAISER ENGINEERS HANFORD COMPANY

M

PIPING LEACHATE COLL SUMP LINER DETAILS

PROJECT TITLE: GROUT VAULT PAIR 218-E-16-102 & 103

PROJ	WO	GOB
B-714	ER1060	242500
SCALE: SHOWN	BLDG: 218-E-16	INDEX: 2500

DRAWING NUMBER	SHEET	OF	REV
H-2-77605	3	3	1

KEHCAD 1=1

012492
3 of 3