PUREX 241-AX TANK FARM AND WASTE ROUTING SYSTEM

INFORMATION MANUAL

Compiled By

J. J. Shefcik

Purex Process Engineering
Research and Engineering Operation
Chemical Processing Department

October 15, 1964

The following data are based on the existing General Electric organization, and no provision or consideration has been given to transfer operations which will take place within this period of time. Similar data prepared by other contractors may differ widely, based on assumptions used.

HANFORD ATOMIC PRODUCTS OPERATION
RICHLAND, WASHINGTON

Work performed under Contract #AT(45-1)-1350
between the Atomic Energy Commission and the General Electric Company

001254

DISTRIBUTION:

1. M. D. Alford
2. S. J. Beard
3. O. F. Beaulieu
4-8. J. M. Blackburn
9. R. E. Burns
10. G. K. Carpenter
11. M. O. Clement
12. D. F. Davis
13-14. J. P. Duckworth
15. J. B. Fecht
16. W. A. Haney
17. G. L. Hanson
18. W. M. Harty
19. R. E. Isaacson
20. H. M. Jones
21. B. F. Judson
22. J. B. Kendall
23. M. L. Madeen
24-30. R. W. McCullugh
31. L. R. Michels
32. G. A. Nicholson
33. S. M. Nielson
34. H. C. Rathvon
35. G. L. Ritter
36. L. W. Roddy
37. W. C. Schmidt
38. H. P. Shaw
39. J. J. Shefcik
40-46. O. V. Smiset
47. P. W. Smith
48. S. G. Smolen
49. B. V. Snow
50. R. E. Tomlinson
51. A. J. Waligura
52. M. E. Yates
53. 700 File
54. Record Center
55-70. Extra

PUREX 241-AX TANK FARM AND WASTE ROUTING SYSTEM

INFORMATION MANUAL

TABLE OF CONTENTS

	Page No.
Introduction	4
Process Description	4
241-AX Tank Farm	5
Leak Detection	6
Vapor Header	6
Air Lift Circulators	7
Waste Routings	7
Diverter Stations	8
Diverter Tanks	9
Test Well	10
Change House 2707-EB	10
Instrumentation Buildings	11
Temperature Measurement	11
Liquid Level	12
Sludge Level	12
Radiation Probe	13
Process Air	13
Instrument Air	13
Raw Water	13
Condensate Return	14
Drains	15
Electrical	16

PUREX 241-AX TANK FARM AND WASTE ROUTING SYSTEM

INTRODUCTION

The six underground storage tanks in the Purex 241-A Tank Farm have been receiving the high level wastes from the Purex plant since its startup in 1956. The present A-Farm tanks will be full early in 1965. By then, additional storage facilities - the 241-AX Tank Farm - will be ready to receive the Purex wastes. The four tanks comprising the AX-Farm which were built on Project CAC-945 are basically similar to the A-Farm tanks.

The need for an improved method of effecting routing changes for Purex high level wastes has long been evident. Process leaks coupled with the high radionuclide concentrations in Purex wastes have grossly contaminated the existing 241-A-151 diversion box. Since the box must be opened to atmosphere for jumper changes, ideal weather conditions and unusually elaborate techniques have been required to minimize radiation exposure and contamination spread. A new routing system for the Purex waste streams - Project CAC-970 - will be completed about the time the AX-Farm is ready to receive wastes. This "Essential Waste Routing System" will use diverter stations in place of diversion boxes. The diverter stations permit a routing change to be made simply and remotely. Opening of the station to make a change is not required. The "Essential Waste Routing" also provides concrete encased lines to AX-Farm, to the A-Farm storage tanks and to the 244-CR Vault. With the activation of the new system, only coating wastes and cribbed wastes will flow through the 241-A-151 diversion box.

This information manual describes the facilities and operation of AX-Farm and the Essential Waste Routing System. Much auxiliary equipment for A and AX-Farm is used in common. Only the modification or expansion of these common auxiliaries is included. A description of A-Farm is included, in part, in the Purex Technical Manual, HW-31000.

PROCESS DESCRIPTION

The 241-AX Tank Farm provides shielded storage space for radioactive wastes from the Purex plant. Shielding is obtained by placing the tanks underground. The radionuclide concentrations in Purex high level wastes are sufficiently high to cause the waste to self-boil from the radio-decay heat. Self-boiling is used to evaporate the wastes to as high a salt content as feasible.

Purex wastes routed to self-boiling storage originate from the following sources: (1) neutralized Purex acid waste (NPAW), (2) neutralized fission product waste (NFPW) - PAW after processing to remove some specific fission products, (3) organic wash waste (OWW), and (4) cell drainage. In all of these waste streams, the fission products chemically are present only in trace amounts. The concentrations of the inert salts is much higher than those of the fission products. The highest concentrations of fission products and inerts are in the NPAW and NFPW. Chemically NPAW contains iron, nickel, chromium, aluminum, sodium, nitrate, nitrite, sulfate, phosphate, fluoride and hydroxide. NFPW is similar to NPAW but also contains lead and carbonate. The OWW is a dilute solution containing sodium, potassium, carbonate, nitrate and manganese dioxide. The cell drainage is also generally low in salt content.

The vapors from the AX-Farm tanks are combined with those from A-Farm and are treated in the same manner. After passing through the primary deentrainer, the condensables are removed by the surface condensers. The noncondensables are drawn by the exhaust fans through the deentrainer vessel and discharged to atmosphere through a stack and a filter. The condensate is routed to the 417 Tank and overflows to Crib 216-A-24 or is pumped back to any of the A or AX-Farm tanks as needed.

Many of the waste constituents - both inert and radioactive - are not soluble in the alkaline solutions stored in the underground tanks and would tend to form a sludge layer on the tank bottom. Most of the heat generating fission products are found in the sludge layer. The accumulation of a sludge layer in an unagitated tank storing self-boiling wastes is known to result in "bumping" - the occasional gross increase in the tank boil-off rate. "Bumping" endangers tank integrity and complicates tank farm control. Like the A-Farm tank, the AX-Farm tanks are mildly agitated with air-lift circulators to maintain the solids in suspension for as long as possible and to prevent "bumping". An expansion of the existing A-Farm compressed air facilities supplies the needs of the AX-Farm circulators.

A diverter station utilizes gravity flow through a movable spout as the means of effecting routing changes for the various streams. The waste lines terminate in diverter tanks which overflow through the movable spouts into funnels on different lines originating at the diverter station. Handles that extend through the diverter station shielding are used to position the spouts.

From Purex, the wastes flow to the 241-AX-151 diverter station. This station has routings to each of the A-Farm tanks, the 241-AX-152 diverter station and Tank 003 in the 244-CR Vault. Routings to the AX-Farm tanks originate in the 241-AX-152 diverter station.

In addition to the waste storage tanks, transfer lines and diverter stations, four structures are provided on the projects. A change house for the operating personnel is on the south edge of AX-Farm. Two buildings to house the air-lift circulator controls and the instrumentation for AX-Farm and the AX-152 diverter station are located within the AX-Farm. Another instrumentation structure is built near the AX-151 diverter station. Figures 1 and 2 show the orientation of the various structure included on the projects. The Engineering Flow Diagrams are shown in Figures 3, 4 and 5.

241-AX TANK FARM

The new Purex tank farm, 241-AX, is about 200 feet north of the 241-A Farm. See Figures 1 and 2. A site close to A-Farm was selected to permit the common use of auxiliary facilities. The site also permits the accommodation of additional tanks to the west.

Basically, the A and AX Tank Farms are similar. Both were designed to store self-boiling wastes in 75-foot diameter, carbon steel-lined tanks of one million gallon capacity. Both farms have two rows of tanks divided by encased fill lines and a vapor header. All of the tanks are equipped with air-lift circulators. There are, however, many differences in detail. Some of these differences are noted below:

	AX-Farm Tanks		A-Farm Tanks
Number of Tanks	4		6
Max. Stored Volume of Concentrated Waste	1,000,000 Gal. at 1.8 SpG		840,000 Gal. at 1.37 SpG
Vapor Pressure Allowance	2.24 psi		2.25 psi
Tank Dome Live Load	40 psi plus a 50 ton concentrated load		28 ton concentrated load
Earth Cover	6.5 to 7.5		7 feet
Number of Air-Lift Circulators	22		4
Leak Detection	Internal		External
Vapor Handling Facilities	----	Common	----
Number of Risers in Tank Dome	54		13
Temperature Elements	59		9

Figures 6 and 7 show the dome plan and a composite section of the AX-Farm tanks.

Temperature limitations on the stored waste are imposed by the concrete in the tank structure. The maximum allowable temperature is 300° F. Thermal stress considerations limit the concrete temperature differential to 30° F per foot. Tank heat-up rates must be such that this differential is not exceeded.

LEAK DETECTION

Each AX-Farm tank has its own internal leak detection system. This consists of a network of drain slots in the concrete base immediately below the carbon steel tank liner. A twelve-inch carbon steel pipe connects the drain network with a leak detection well. The sixty-foot-deep-well consists of a 24-inch, Sch 20 carbon steel pipe, surmounted by a concrete pump pit. See Figure 7. Two 10 GPM deep-well turbine pumps are provided on the project to remove any leakage. When in use, a pump would be connected to the AX-Farm pumpout header (Line 4026) through a standard remote pipe jumper and a lateral line to the header terminating at a pump pit wall nozzle. Each leak detection well is vented to the main vent header through water-filled seal pots. See Figure 8. The leak detection pump pit floors drain into their respective storage tanks through 4-inch lines that extend to 5 feet from the tank bottom.

VAPOR HEADER

The vapors, air and steam, exit the storage tank through a baffled, 20-inch diameter pipe and are drawn into the 24-inch diameter vent header. This main header runs between the tanks to the AX-152 diverter station. From here the header runs into A-Farm and ties into the A-Farm vent header through a spare

stub. Wherever possible, the vent header surmounts a pipe encasement. The header is direct-buried with a minimum earth cover of four feet. The header slopes upward to the A-Farm tie-in. Spare stubs with 60-inch deep water seals are provided at the AX-152 diverter station (SP-100) and at the south edge of the AX-Farm (SP-110). The vent system is constructed of stainless steel.

AIR-LIFT CIRCULATORS

The use of air-lift circulators is a simple and reliable means of mildly agitating the storage tanks to prevent "bumping" and to delay sludge settling. The large number of circulators in the AX-Farm tanks (22 per tank) is expected to maintain the solids in suspension for a prolonged period. This should reduce the maximum sludge temperature and result in a softer, more readily removable sludge. Seventeen of the 30-inch diameter circulators are 22 feet long and the remaining five are 17 feet in length. The taller units require a solution volume of 800,000 gallons for operation and the shorter units about 600,000 gallons. All of the units are 30 inches from the tank bottom. A six-inch pipe supports the carbon steel circulator from the tank dome. A one-inch pipe, concentric to the six-inch support pipe, conveys the motive air to the bottom of the circulators. This one-inch pipe can be replaced should it become plugged. Rotameters located in the instrumentation buildings 241-AX-801-A and 241-AX-801-B are used to indicate the motive air flow rate to each circulator. Water flushing of the air lines can also be done from these buildings. A one-inch ball valve directly above the circulator air line can be used should a more rigorous cleanout be required. Normally, each circulator requires about 5 CFM of air. Figure 9 shows the circulator construction and location within the tanks.

WASTE ROUTINGS

The installation of the new tank farm and the need to replace the diversion boxes as the means for changing routings required the construction of a new network of waste routings. Double containment (two barriers between the solution and ground) is used for almost all of the routings. Only the streams low in radionuclide content or infrequently used do not have double containment. The pipe, usually stainless steel, is the primary means of containment. Reinforced concrete encasements provide the secondary containment for most of the routings. A few lines utilize corrugated pipe as the second barrier. A cathodic protection system is included to minimize environmental corrosion. Pertinent information concerning the new routings are included in Table I. The lines are also shown in Figure 5.

The four lines from Purex originate from five canyon vessels and R-Cell. The Purex source tank and the terminal diverter tank in 241-AX-151 are as follows:

Source	Stream	Diverter Tank
TK-E-1	Fission Product Crude	D
TK-E-3	Neutralized FP Waste	E
TK-F-16	Neutralized IWW	E
TK-F-18	Cell Drainage	F
TK-G-8	OWW	G
TK-R-8	OWW	G

All of these vessels now have routes from Purex through the 241-A-151 diversion box. In all cases, the existing jet controls will be used with the new routings. A sketch of the in-plant routings is shown in Figure 10.

The streams flow by gravity from Purex and from the diverter stations. A minimum slope of 0.625 per cent is maintained by the encased lines. All of the lines will drain into the diverter tanks or into the receiving tank. Waste from Purex to AX-Farm passes through both diverter stations.

A minimum earth cover of seven feet is placed over the encased lines to provide the necessary radiation shielding. At two of the railroad crossings, steel and concrete are used for shielding because the seven feet of earth cover could not be used. Test risers consisting of 2-inch pipe extend from the interior of the encasement to three feet above ground level. These risers, located at several points along the encasements, are used to check for process leaks. A swab can be lowered into the encasement after removing the pipe cap from the upper end. Contamination of the swab would be indicative of a process leak.

Each of the storage tanks has a spare encased fill line on the side opposite the normal fill lines. These spare lines extend 20 feet from the tank and have a 3/4-inch flush line attached to clean the line before any future tie-in.

DIVERTER STATIONS

The two diverter stations are reinforced concrete structures with their tops at ground level. Cells containing the diverter tanks and a pump pit are above a catch tank. Figures 11 and 12 show the two stations. The overall dimensions of the stations are:

	Length	Height	Width
241-AX-151	41' 4"	24' 10"	10'
241-AX-152	25' 2"	29' 2"	9'

Access to the cells and to the pump pit is possible by removing the 5-foot 8-inch thick cover blocks. Inspection of the diverter tank cells is possible through ports in the cover blocks. Shielding plugs are normally installed in the inspection ports.

The four diverter tanks in the AX-151 station are in individual cells whereas the two diverter tanks in AX-152 are in a common cell. These cells have stainless steel liners on the floors and extending about one foot up the walls. Both diverter stations have essentially identical pump pits. The pump pit floors do not have liners but contain 24-inch diameter risers from the catch tank below. All cells and the pump pits drain into the catch tank. Flush headers encircle the tops of the pump pits and cells.

Both of the diverter station catch tanks have full stainless steel liners. The nominal capacities of the catch tanks are the same (11,000 gallons), but their dimensions are different as noted below:

	Length	Height	Width
TK-241-AX-151	38' 4"	6' 3"	7'
TK-241-AX-152	22' 2"	11' 1"	6'

The catch tank floors slope towards sumps which are located below the pump pits. A flush header is installed near the top of each catch tank. Flush solutions can be added to the header through any of the diverter tanks and a funnel in the diverter cell.

Turbine pumps, installed in the 24-inch pump pit risers, are normally used to empty the catch tanks. Standard remote pipe jumpers are used to connect the 100 GPM pump to either one of the two discharge lines in each pump pit. The pump pit floor drains are dip-legged into the sumps. Any cooling water needed to permit pumping heated solutions can be supplied through a water line to the floor drain. Since the catch tanks do not have cooling coils, self-heating wastes cannot be allowed to accumulate. Water jets are installed in both pump pits that serve as backups for the pumps.

Both diverter stations have reinforced concrete valve pits nearby for controlling the addition of flush water to the various points in the diverter stations. The tops of the pits are at ground level and have access through hatches. Both pits have overall widths of 5 feet 4 inches and heights of 7 feet 8 inches. The respective lengths are 13 feet 4 inches and 8 feet 10 inches for the AX-151 and AX-152 pits. Thermostatically controlled electric heaters maintain the pits above freezing.

Stub encasements with spare lines are included with both diverter stations to simplify future expansions. The encaseements extend 20 feet from the stations. Soft concrete is used on the stub end and can be removed with relative ease. Each spare line is capped and has a 3/4-inch flush line attached. The flush lines terminate at or near ground level. These lines permit flushing of the stubs prior to any future tie-ins.

DIVERTER TANKS

All of the waste lines to the diverter stations terminate in the diverter tanks. The waste overflows a diverter tank through a movable spout into a funnel on one of the waste lines that runs from the station. A routing change is made by moving the spout to the proper funnel. Positioning the spout is done with a shaft that extends through the cover block to a handle. A stationary index on the above ground housing is used to indicate the spout position. The diverter spout extends into the funnels. Thus a routing change requires a vertical movement before and after rotating the shaft. Since the diverter tanks rely on gravity flow, the flows are necessarily unidirectional. The overflows can pass a flow of 150 GPM.

Several inches of liquid are normally maintained in the diverter tanks to provide liquid seals for most of the inflowing waste lines. The elevations of the high points in the overflow lines to the spouts keeps liquid depths of 11.5 inches and 21 inches in the AX-151 and AX-152 diverter tanks, respectively. Siphon

breaks prevent emptying of the tanks. Inlet lines that originate at elevations below the diverter tank liquid level and do not have intervening high points discharge into the diverter tank above the liquid level. The condensate return routings from the 417 Tank contain siphon breaks into the 417 Tank at a high point. Most of the lines are welded to the diverter tanks. Some, however, enter through oversized holes above the liquid level in order to accommodate for line thermal expansion.

All of the diverter tanks are constructed of stainless steel. All have identical diameters (30 inches) but the four AX-151 Tanks are 52 inches high and the two AX-152 Tanks 42 inches. Venting of the diverter tanks is through lines from their upper dished heads. The AX-151 Tanks vent to the diverter cells which, in turn, vent to the A-Farm tanks through the waste lines. A line connected to the tank farm vapor header vents the AX-152 diverter tanks. All the tanks have a 6-inch deep bed of 1/2-inch Raschig rings near their tops to give some measure of deentrainment. Each diverter tank has a two-inch cleanout pipe extending from 1-1/2 inches above the line to the spout to within 3 inches of the diverter cell cover blocks. A port in the cover blocks is located immediately over the cleanout pipe. This system can be used to aid in flushing the spout.

All the diverter tanks can be flushed through spray rings located above their packed sections. The flush water originates in the diverter station valve pits. Motor-operated valves are included in the flush lines to the four AX-151 diverter tanks. These valves can be opened by push buttons on the Purex panelboards near the jet controls feeding the particular diverter tank. The electric circuits contain time delay relays. After a transfer from the Purex plant, the circuit is manually activated and the valve opens for a preset time period. The control panel in the AX-151 instrument enclosure also has a set of push buttons that can operate the motor-controlled valves. All of the push button locations have lights to indicate the valve position. Although the valves will close automatically after the preset time period, the valve may be closed sooner by pressing the "close" button. No automatic flush system is used on the AX-152 diverter tanks.

TEST WELL

One standard radiological test well is provided and is located near the southeast corner of AX Tank Farm. The eight-inch carbon steel well casing extends 325 feet below grade. This is some 40 feet below the ground water level.

CHANGE HOUSE 2707-EB

Personnel access to the AX Tank Farm is through the 2707-EB Change House. The structure, 30 feet 10 inches long by 12 feet wide, contains lavatory facilities, a shower, clothes lockers, protective clothing storage bins, 4 and 5-fold combination counter, water treatment facilities and a drinking fountain. The change house has two rooms - the change room and a small room containing the water treatment equipment (filter, chlorinator and retention tank), a water heater, the main power panel for AX-Farm and a lighting panel. Other equipment in the change house includes fluorescent lighting, electric unit heaters, an evaporative cooler and exhaust fans.

INSTRUMENTATION BUILDINGS

Three instrumentation enclosures house most of the various recorders, indicators and electrical switchgear. In addition, some indicators and alarms are in the 241-A-271 control room. Locations of the structures are shown on Figures 1 and 2. The following table lists pertinent information concerning the instrument enclosures:

Enclosure	Size	Instrumentation For
241-AX-801-A	24' x 12'	TK-241-AX-101, TK-241-AX-103, SP-100, 241-AX-152 Diverter Station.
241-AX-801-B	24' x 12'	TK-241-AX-102, TK-241-AX-104, SP-110.
241-AX-151	10'8" x 6'8"	241-AX-151 Diverter Station.
241-A-271		Liquid level indicator console, annunciator panel.

The three new instrument enclosures are equipped with electric heat and fluorescent lighting.

The instrumentation provided measures temperature, liquid level, weight factor, specific gravity, sludge level and radiation. Figures 13 and 14 show the Instrument Flow Diagrams and the panelboards are shown in Figures 15, 16 and 17.

TEMPERATURE MEASUREMENT

A total of 59 iron-constantan thermocouples are installed in each of the waste storage tanks. Each of the air-lift circulators has a temperature element below it that extends to within three inches of the tank bottom. The movement of wastes about the circulators keeps the area immediately below free of sludge. Malfunctioning of a circulator would allow sludge to deposit below it and would be indicated by a temperature rise at the adjacent thermocouple. A temperature element is also installed near the bottom of each leak detection pit. This temperature, along with the 22 circulator temperatures are recorded on the 24-point temperature recorder for the particular tank.

Twenty-one of the thermocouples are installed within each storage tank's concrete structure. Nine pairs are installed in the wall at three locations approximately 90 degrees apart and at three heights. Each pair permits the determination of the thermal gradient through the tank wall. Three other thermocouples are located near the outer edge of the tank footing. Typical locations of these structural thermocouples are shown in Figures 6 and 7.

Twelve other thermocouples are in thermowells within the storage tanks and are used to measure temperature gradients in the stored waste at four locations. These "profile" temperature assemblies are approximately 90 degrees apart and 18 inches from the tank wall. The assemblies are identical with thermocouples 3 inches, 13 feet -1 inch and 24 feet -11 inches from the tank bottom. The three remaining tank thermocouples are installed in separate assemblies 12 feet,

6 inches from the tank center, 120 degrees apart and three inches from the tank bottom. These measure the waste temperatures near the tank bottom and some distance from the circulators.

The 36 structural and stored wastes thermocouples are not recorded. The thermocouple leads end in terminal boxes in the 801 instrument enclosures. A portable potentiometer is used to obtain the individual temperatures.

Each of the diverter station catch tanks has a thermocouple installed in a thermowell located near its bottom. The AX-152 temperature element is recorded on the 24-point temperature recorder for TK-241-AX-103. An indicator in the AX-151 instrument enclosure receives the signal from its diverter station thermocouple.

LIQUID LEVEL

Standard liquid level gauge transmitters are installed on each of the storage tanks to monitor the waste levels. The liquid levels as measured by the float-actuated transmitters can be read at the transmitters or on a display panel at the console in the 241-A-271 control room. A telephone type rotating dial on the console is used to select the tank to be displayed. Spare connections for four additional transmitters are available.

Two air-purged dip tubes are installed in each tank to sense tank pressure and the level of any liquid in excess of 30 feet 6 inches (1,008,000 gallons). The tank pressures are recorded and the liquid levels indicated on the instrument enclosure panelboards. These instruments contain contacts to indicate on the AX-Farm annunciator panel in the 271-A Building when the preset limits are exceeded.

The leak detection wells contain air-purged dip tubes to sense the weight factor and specific gravity of any liquid that may accumulate. Dip tubes are also installed in the leak detection well seal pots. These points are read on indicators on the instrumentation building panelboards. Contacts are included in the weight factor indicators to send an alarm to the AX annunciator panel.

Air-purged dip tubes in the diverter stations sense the diverter tank weight factors and the catch tank weight factors and specific gravities. Dial-type indicators on the appropriate panelboard are used to read the value sensed. The two catch tank weight factor indicators have contacts to send high level alarm signals to annunciator panel and to send low level pump cut-off signals to the respective catch tank motor control. Both diverter stations have ports near the catch tank thermowells to allow determination of catch tank levels with electrodes.

SLUDGE LEVEL

Sludge-level meters are used to measure the depth of the sludge layer in the AX-Farm tanks. A meter consists of a 6-inch diameter steel disc suspended by a calibrated tape from a reel. The reel is mounted above a section of glass pipe which in turn is mounted on a tank riser. The above grade equipment, shown in Figure 18, is similar in appearnace to the liquid level probes on the A-Farm tanks. In operation, the disc is lowered until it comes to rest on the sludge. The tape measurement relative to a fixed mark on the glass pipe is noted. The

difference between this reading and the reading obtained with the tank empty represents the sludge depth. Each of the AX-Farm tanks has seven sludge level gauges located as shown in Figure 6.

RADIATION PROBE

Radiation detection probes are installed in the 6-inch wells adjacent to the leak detection wells. Radiation detected by the GM tube probes are indicated on the instrument enclosure panelboards. The indicators have contacts that activate drops on the AX annunciator panel when preset radiation levels are exceeded.

PROCESS AIR

An expansion of the A-Farm process air facilities was required by the demands of the air-lift circulators in the AX-Farm tanks. The two 40 horsepower compressors in the A-Farm compressor building 241-A-701 were replaced by three 50 horsepower, vertical, single cylinder piston-type units built by the Joy Manufacturing Company. Each compressor has a nominal capacity of 360 cfm with a discharge pressure of 40 psig. The 440 volt, 3 phase, 1750 RPM totally enclosed, fan-cooled motors drive the compressors through pulleys and drive belts. The three units discharge into a common process air manifold which feeds the existing air receiver, the A-Farm process air header, and the new process air header to AX-Farm. The new process air header (line 1000) is a 3-inch line that parallels the vent header into AX-Farm. Lateral headers run to the two instrumentation buildings where the rotameters for regulating the air flow to the air-lift circulators are contained. The air lines to the circulators are shown in Figure 6. Moisture in the process air drains to a trap located in a dry well near TK-104-AX.

Operation of the air compressors is automatically controlled by a number of pressure switches and relays. The compressor control elementary diagram is shown in Figure 19 as is an explanation of compressor operating sequence.

INSTRUMENT AIR

The instrument air compressors used for A-Farm are adequate to also serve the needs of the AX-Farm and the diverter stations. The instrument air pressure was expanded to include a new underground one-inch pipe (line 2000) that carries 40 psi instrument air from the compressor building to the three instrumentation buildings. The line parallels the process air header into the AX-Farm instrument buildings with the one-inch line to the AX-151 diverter station instrument building teeing off between the two tank farms and running adjacent to the encasement from AX-151. Like the process air line, the instrument air drains to a trap in the dry well near TK-104-AX. The air is reduced to 20 psi by standard PRV stations in the three instrumentation buildings and is supplied to the instrument panels from headers.

RAW WATER

Raw water is supplied from a 6-inch line that tees off from the 8-inch line supplying A-Farm. The new 6-inch raw water header runs along the south edge of AX-Farm and supplies the following:

Place	Line Size
Change House	1-1/2 Inch
Vent	1-Inch
Fire Hydrant	6-Inch
241-AX-151	3-Inch
241-AX-152	3-Inch
AX-Instrument Enclosures	1-1/2-Inch

The header on AX-Farm can be drained through a line to the drywell by TK-104-AX. Each AX-Farm instrument enclosure has two water headers that supply the following:

1. Cooling water to suctions of tank pumpout pumps.
2. Flush water to air circulators.
3. Leak detection wells.
4. Leak detection well seal pots.
5. Vapor header seal loops.

In addition to valves, the lines to the pump pits and to the leak detection wells have Robinson Blind Flanges. The line to the diverter stations terminate in the nearby valve pits. Line from the valve pits supply the following:

1. Flush headers in diverter cells and in pump pits.
2. Flush rings in diverter tanks.
3. Cooling water for pump suction (via pump pit floor drains).
4. Catch tank water jets.
5. Water hydrants.

CONDENSATE RETURN

Like A-Farm, the AX-Farm has provisions for tank farm condensate return to tanks as a means of maintaining the stored waste at its proper concentration. The AX-Farm condensate return system is an expansion of that used for A-Farm. A small concrete valve pit (241-AX-501) was built near the condensate collection tank (TK-241-A-417). A three-inch line, F-100, connects a header in the AX-501 valve pit to a spare wall nozzle in the pump pit above the 417 Tank which, in turn, has a remote pipe jumper connection to the 417 Tank pumpout header. In the AX-501 valve pit, two pipe jumpers containing globe valves connect the F-100 header to the F-101 and F-102 condensate return lines. The jumper valves are operated by

extension handles through the valve box cover block. The return to AX-Farm is through the AX-152 diverter tanks and not directly to the tanks as in A-Farm. Line F-101 terminates in A-diverter tank and F-102 in B-diverter. By appropriate valving, tank farm condensate can be pumped to any of the A or AX-Farm tanks.

Each AX-Farm waste storage tank has a spare riser that can be used for the future routing of the condensate directly to the tank. New condensate return lines to the 4-inch risers that terminate eight feet below grade are required. The riser locations are shown in Figure 6.

DRAINS

The disposal method for in-leakage or normal drainage from structures and equipment depends on the volume and the contamination potential. Wherever feasible, potentially contaminated drainage is routed into the waste system. If this is not practical, dry well disposal is used. The following table lists pertinent drainage information:

Drainage From	Drains To	Remarks
Tank Pump Pits	Tank	4-inch lines extends to 5 feet from tank bottom.
Leak Detection Pump Pit	Tank	Ditto above.
Leak Detection Radiation Probe Pit	Ground	Gravel Bed.
Diverter Station Pump Pit	Diverter station catch tank	Floor drain is dip-legged into catch tank sump.
Diverter Station Cells	Diverter station catch tank	Floor drains in AX-151 - Clearance around funnels in AX-152.
Diverter Station Valve Pits	Dry Wells	24-inch concrete pipe, 8 or 9-feet long.
Process Air Line 1000 Inst. Air Line 2000 Water Header 3001	Dry well by TK-241-AX-104	Top of dry well at ground level. 48-inch concrete pipe, 12-feet long.
Vapor Header Seal Loops SP 100 and SP 110	TK-241-AX-152	Valve in drain line is in adjacent manhole.
241-AX-501 Valve Box	241-A-417 Pump Pit	Via line 0030.
Pipe Encasement from 202-A to AX-151	TK-241-AX-151	Empties into pump pit floor drain.

Drainage From	Drains To	Remarks
Pipe Encasement from AX-151 to AX-152	TK-241-AX-152	Empties into pump pit floor drain.
Pipe Encasement from AX-151 to 244-CR	244-CR Vault Sump	
Pipe Encasement from AX-151 to A-Farm Tanks		Each encasement has a 35-foot long jet-out line terminating at a valve.
Pipe Encasement from AX-152 to AX-Farm Tanks	Two Dry Wells	24-inch diameter concrete pipe 16 feet long. Have test risers.
Pipe Culvert from AX-152 to AX-151	TK-241-AX-152	Empties into drain line for AX-151 to AX-152 encasement.
Compressor Building 241-A-701	Warm Water Sump	Compressor cooling water. High flow and must be reused when on emergency water. Has catch basin near compressor building.
Condenser Building 241-A-401	Warm Water Sump Outlet	Floor drain.
Change House	Leaching beds between AX-Tanks and Change House	Via a septic tank.

ELECTRICAL

Electrical power requirements for AX-Farm operation are provided by an expansion of existing facilties. A new underground cable is installed between the switchgear cable room in Purex to an existing utility pole north of 202-A. The new cable connects to the existing overhead feeder lines supplying A-Farm. A new 300 KVA, 2400/480 volt, 3-phase transformer replaces the 150 KVA unit near the control house (241-A-271). This former unit was used to supply power to A-Farm - the new unit supplies the needs of both tank farms. The elementary electrical diagram for the new facilities is shown in Figure 20. From the transformer direct buried feeder cables run to the compressor building and to the change house.

The electrical modifications in the compressor building (241-A-701) included an expansion of the existing motor control center and of the emergency power generating equipment. A new switchgear section was added to the existing motor control to provide power to the third air compressor. Existing starters were used for the other two air compressors. A new compressor control cabinet was added, as discussed under Process Air. Emergency power for the air compressors, and other essential auxiliary equipment, is supplied by a new 125 KVA diesel-driven generator. This replaced a 35 KVA gasoline-motor driven unit. New auxiliary equipment provided as part of the larger emergency power facility includes: (1) an underground 500 gallon fuel oil tank located northwest of the compressor building, (2) an engine instrument panel, (3) a generator control

panel, (4) a battery-operated starter motor, (5) batteries and a battery charger, and (6) a larger automatic transfer switch between the emergency power and the normal power supplies. The older diesel-driven generator will remain intact for supplying emergency power to the control building and the emergency cooling water system. No emergency power is supplied to the AX-Farm changehouse, instrumentation buildings or diverter stations.

The main power panel for AX-Farm is in the water treatment room of the changehouse 2707-EB. This panel "P" supplies the following:

1. Panels "PA" and "PB" in the AX-Farm instrumentation enclosures.

2. The change house space heater.

3. The hot water heater.

4. The two flood light poles (on the east and the south sides of AX-Farm).

5. The two power recepticals (by the leak detection pits for Tanks 102 and 104-AX).

6. Panel "L" in the change house.

7. Three circuits to the junction box at the southwest corner of AX-Farm for use in future expansion.

Panel "PA" in 241-AX-801-A and panel "PB" in 241-AX-801-B are similar. Each panel contains motor starters which supply power to the tank and leak detection pumps on the two tanks it controls. Ammeters on the panels indicate the current drawn by the tank pumpout pumps. Each panel also supplies power to a unit heater in the instrument enclosure and to a lighting panel. Panel "PA" serves the power needs of the 152-AX diverter station - the catch tank pump and the valve pit heater. Remote electrical jumpers connect the various pumps to the electrical connectors on the pit walls. Direct buried electrical cable is used on all of the power runs.

Power to the 241-AX-151 diverter station is supplied from a 2400/480, three-phase 45 KVA transformer mounted on a new pole near the diverter station. The transformers are supplied by overhead lines that tap the feeder lines to the Purex tank farms. Underground cables run from the transformer pole to the power panel in the 151-AX instrument enclosure. The power panel supplies the following:

1. A welder receptical mounted on the outside of the instrument enclosure.

2. The catch tank pump.

3. Area lights mounted on the transformer pole.

4. The lighting panel.

5. Two spares.

Power to the unit heaters in the instrument enclosure and in the valve pit is furnished from the lighting panel. The electric motor-operated valves on the

diverter tank flush lines (see discussion of diverter tanks) are also supplied from the lighting panel through the relay panel in the instrument enclosure. Figure 21 presents the electrical elementary diagram for the 151-AX diverter station. The signal lines from the push button on the Purex panels run overhead from Purex to the new transformer pole and then underground to the relay panel.

A standard Hanford cathodic protection system is installed on the AX-Farm and on the waste routing system. The existing rectifiers by the Control House were tapped to supply the anodes around AX-Farm. A rectifier in the 241-AX-151 instrument enclosure supplies the anodes installed along the waste routing system.

TABLE I

WASTE LINES

Line No.	Waste Stream	Source	Terminal(1)	Line Type(2)
4001	Fission Product Crude	TK-E-1, 202-A	AX-151-D	E-3-SS
4002	NFPW	TK-E-3, 202-A & Line 4028	AX-151-E	E-3-SS
4003	Cell Drainage	TK-F-18, 202-A	AX-151-F	E-3-SS
4004	OWW	TK-G-8, 202-A & Line 4023	AX-151-G	E-3-SS
4023	OWW	TK-R-8, 202-A	Line 4004	E-3-SS
4028	NPAW	TK-F-16, 202-A	Line 4002	E-3-SS
4005	Spare		AX-151-D	E-3-SS
4006	Spare		AX-151-E	E-3-SS
4007	Spare		AX-151-F	E-3-SS
4008	Spare		AX-151-G	E-3-SS
4009	Spare		AX-151-E	E-3-SS
4019	Spare		AX-151-F	E-3-SS
4020	Spare		AX-151-G	E-3-SS
4010	(Leakage and	(P-AX-151 in	AX-151-F	E-3-SS
4011	(Drainage)	(TK-241-AX-151)	AX-151-E	E-3-SS
4016	"	Water jet in TK-241-AX-151	AX-151-E	E-3-SS
4107	A-Farm Waste	241-A-152 Diversion Box	AX-151-D	DB-3-SS
4101	Purex Waste	241-AX-151	TK-241-A-101	E-4-SS
4102	Purex Waste	241-AX-151	TK-241-A-102	E-4-SS
4103	Purex Waste	241-AX-151	TK-241-A-103	E-4-SS
4104	Purex Waste	241-AX-151	TK-241-A-104	E-4-SS
4105	Purex Waste	241-AX-151	TK-241-A-105	E-4-SS
4106	Purex Waste	241-AX-151	TK-241-A-106	E-4-SS
4012	Spare	241-AX-151	Spare	E-4-SS
4013	Spare	241-AX-151	Spare	E-4-SS
4014	Spare	241-AX-151	Spare	E-4-SS
4015	Spare	241-AX-151	Spare	E-4-SS
4017	Purex Waste	241-AX-151	AX-152-B	E-4-SS
4018	Purex Waste	241-AX-151	AX-152-A	E-4-SS
8656	Fission Product Crude	241-AX-151	TK-003, 244-CR	E-4-SS
4021	(Leakage and	(P-AX-152 in	AX-151-G	P-3-SS
4022	(Drainage)	(TK-241-AX-152)	AX-151-D	P-3-SS
4030	"	Water jet in TK-241-AX-152	AX-152-B	E-3-SS
4024	Spare		AX-152-B	E-4-SS
4025	Spare		AX-152-A	E-4-SS
4026	AX-Farm Waste	Pump-out Header	AX-152-A	DB-3-CS
4027	Spare		AX-152-B	DB-3-CS
F101	(Tank Farm)	(241-AX-501)	AX-152-A	DB, P-2-CS
F102	(Condensate)	(Valve Box)	AX-152-B	DB, P-2-CS
A101	Purex Waste	241-AX-152-A	TK-241-AX-101	E-4-SS
B101	Purex Waste	241-AX-152-B	TK-241-AX-101	E-4-SS
C101	Spare	Spare	TK-241-AX-101	E-4-SS
A102	Purex Waste	241-AX-152-A	TK-241-AX-102	E-4-SS
B102	Purex Waste	241-AX-152-B	TK-241-AX-102	E-4-SS
C102	Spare	Spare	TK-241-AX-102	E-4-SS
A103	Purex Waste	241-AX-152-A	TK-241-AX-103	E-4-SS
B103	Purex Waste	241-AX-152-B	TK-241-AX-103	E-4-SS

TABLE I (Cont'd.)

WASTE LINE

Line No.	Waste Stream	Source	Terminal(1)	Line Type(2)
C103	Spare	Spare	TK-241-AX-103	E-4-SS
A104	Purex Waste	241-AX-152-A	TK-241-AX-104	E-4-SS
B104	Purex Waste	241-AX-152-B	TK-241-AX-104	E-4-SS
C104	Spare	Spare	TK-241-AX-104	E-4-SS
A105	Spare	241-AX-152-A	Spare	E-4-SS
B105	Spare	241-AX-152-B	Spare	E-4-SS
C105	Spare	Spare	Spare	E-4-SS
A106	Spare	241-AX-152-A	Spare	E-4-SS
B106	Spare	241-AX-152-B	Spare	E-4-SS
C106	Spare	Spare	Spare	E-4-SS
A107	Spare	241-AX-152-A	Spare	E-4-SS
B107	Spare	241-AX-152-B	Spare	E-4-SS
C107	Spare	Spare	Spare	E-4-SS
A108	Spare	241-AX-152-A	Spare	E-4-SS
B108	Spare	241-AX-152-B	Spare	E-4-SS
C108	Spare	Spare	Spare	E-4-SS
O-151	Waste	241-AX-151	TK-241-AX-151	
O-152	Waste	241-AX-152-A, B	TK-241-AX-152	
F-100	Tank Farm Condensate	241-A-417	241-AX-501	DB-3-CS

Notes:

1. The final letter designates the diverter tank.

2. The number indicates the pipe size. The letters indicate the following:

E - Concrete Encasement
P - Culvert Encasement
DB - Direct Buried
SS - Stainless Steel
CS - Carbon Steel

TABLE II

DRAWING LIST

Project CAC-945 - 241-AX Tank Farm and
241-AX-152 Diverter Station

Civil - Structural

Drawing No.	Title
H-2-44550	Tank Farm Drawing List
H-2-44551	General Area Plan
H-2-44552	Plot Plan, Finished Grading and Facilities
H-2-44553	Test Wells - Retaining Wall & Details
H-2-44554	General Area Plan Radiological Zones
H-2-44555	Ground Topography
H-2-44560	Dome Plan
H-2-44561	Pump Pit
H-2-44562	Waste Storage Tanks Composite Section & Details
H-2-44563	Waste Storage Tanks, Drain Arrangement & Details
H-2-44565	Waste Storage Tanks - Dome Reinforcement Plan & Details
H-2-44570	Dome Risers & Plugs - Details
H-2-44571	Dome Risers & Plugs - Details
H-2-44575	Leak Detection Pit - Tanks 102 & 104-AX
H-2-44576	Leak Detection Pit - Tanks 101 & 103-AX
H-2-44577	Leak Detection Pit - Details
H-2-44578	Leak Detection System - Details
H-2-44580	Diverter Station Plans & Sections
H-2-44581	Diverter Station Sections & Details
H-2-44582	Removable Cover Blocks
H-2-44583	241-AX-152 Diverter Station Liners
H-2-44584	Diverter Station - Miscellaneous Details
H-2-44587	Encasement 241-AX-151 to 241-AX-152 Plans & Profile
H-2-44588	Encasement 241-AX-151 to 241-AX-152, Elevations & Sections
H-2-44589	Encasement 241-AX-151 to 241-AX-152, Details
H-2-44590	Encasement - Tank Farm Area, Footing Plan & Elevation
H-2-44591	Encasement - Tank Farm Area, Footing & Column Details
H-2-44592	Encasement - Tank Farm Area, Plan of Encasement
H-2-44593	Encasement - Tank Farm Area, Details of Encasement
H-2-44594	Encasement - Tank Farm Area, Vent Header Beam
H-2-44595	Cross Encasement - Tanks 103 & 104-AX
H-2-44596	Cross Encasement - Tank 101 & 102-AX
H-2-44597	Stub Encasements
H-2-44603	Plan, Section & Elevations - Change House
H-2-44604	Sections & Details - Change House

TABLE II (Cont'd.)

DRAWING LIST

Civil - Structural (Cont'd)

Drawing No.	Title
H-2-44605	Instrument Enclosure
H-2-44607	Structural & Piping, Valve Pit

Mechanical

H-2-32365	241-AX-152 Diverter Station, Jumper P-152-AX
H-2-44610	Vertical Pumps - General Arrangement for Corrosive Service
H-2-44611	Vertical Pump - Discharge Head - Details for Corrosive Service
H-2-44612	Engineering Flow Diagram - 241-AX Tank Farm, Sheets 1, 2 & 3
H-2-44613	Vertical Pumps - General Arrangement - Non-Corrosive Service
H-2-44614	Vertical Pump Discharge Head Details for Non-Corrosive Service
H-2-44615	Pump Adapter Flange Assembly
H-2-44616	Pump Adapter Flange & Details
H-2-44617	Pump Riser Flanges & Miscellaneous Details
H-2-44618	Direct Buried Piping Plan, Tanks 101 & 102-AX
H-2-44619	Direct Buried Piping Plan, Tanks 103 & 104-AX
H-2-44620	Direct Buried Piping Plans, 241-AX-152 Area
H-2-44624	Direct Buried Piping Sections, Tank 101, 102, 103, & 104-AX
H-2-44626	Direct Buried Piping, Miscellaneous Details
H-2-44629	General Piping Arrangement, Tank Farm Area
H-2-44630	Process Waste Lines, Sections & Details
H-2-44631	Process Waste Lines 241-AX-151 to 241-AX-152, Plan & Details
H-2-44632	Process Waste Lines, Sections & Details
H-2-44633	Process Waste Lines, Tank Farm Area, Plans & Sections
H-2-44635	Process Waste Lines, Sections & Details
H-2-44636	Waste Line Encasement, Anchor Clamp Details
H-2-44646	General Piping Arrangement
H-2-44647	Plan & Profile, Vent Header, Drain & Air Lines
H-2-44650	Plan & Profile, Raw Water & Drain Lines
H-2-44651	Plan & Profile, Raw Water & Inst. Air Piping to 241-AX-151 Diverter Station
H-2-44652	Plan & Profile, Condensate Return & Drain Lines
H-2-44659	Condensate Return Jumper No's 501-AX-A2 and 501-AX-B2
H-2-44660	Condensate Return Jumper No's 417-A-22 & 417-A-16
H-2-44666	Process Jumpers for Pump Pits

TABLE II (Cont'd.)

DRAWING LIST

Mechanical (Cont'd.)

Drawing No.	Title
H-2-44667	Process Jumpers & Blank Connectors for Pump Pits
H-2-44669	Leak Detection Pit Piping & Equipment Arrangements, Tanks 101 & 103-AX
H-2-44670	Leak Detection Pit Piping & Equipment Arrangement, Tanks 102 & 104-AX
H-2-44671	Leak Detection Pit Piping Details
H-2-44675	Process & Service Piping, Arrangement & Details
H-2-44676	Air-Lift Piping Arrangement & Circulator Details
H-2-44681	241-AX-152 Diverter Station, Piping & Equipment Arrangement Plans
H-2-44682	241-AX-152 Diverter Station, Piping Details
H-2-44683	Diverter Station Piping & Equipment Arrangement Sections
H-2-44685	Mounting Details for Winch
H-2-44686	Diverter Station, Diverter Assembly & Details
H-2-44687	Diverter Station, Diverter Tank Assembly
H-2-44688	Diverter Station, Diverter Details
H-2-44695	Equipment & Piping, Plans & Details, Compressors & Diesel-Electric Set
H-2-44696	Existing Equipment Arrangement & Key to Description of Work
H-2-44697	Compressor Installation, Sections & Details
H-2-44701	Ventilation & Plumbing Equipment Installation

Electrical-Instrumentation

H-2-44705	General Plot Plan
H-2-44706	Wire Run Schedule
H-2-44707	Wire Run Schedule
H-2-44708	Tank Farm Plot Plan & Details
H-2-44709	Tanks 101 & 103-AX, Instrumentation - Underground Cable Runs
H-2-44710	202-A Building Sections & Details
H-2-44711	Tank Farm Power Underground Cable Runs
H-2-44712	Instrumentation Underground Cable Runs - Tank 102 & 104-AX
H-2-44713	Sections & Elevations
H-2-44715	Jumpers for Pump Pits
H-2-44721	Block & Elementary Diagrams
H-2-44722	Control House Plan & Details and Connection Diagram
H-2-44724	Change House Plan & Details
H-2-44725	Instrument Enclosure Plan & Details

TABLE II (Cont'd.)

DRAWING LIST

Electrical-Instrumentation (Cont'd.)

Drawing No.	Title
H-2-44726	Miscellaneous Plans & Elevations
H-2-44728	Plan & Details, Compressor House
H-2-44730	Compressor Building, Connections & Details
H-2-44733	Temperature Element & Sensing Line Assemblies & Details
H-2-44734	Engineering Diagram, Diverter Stations
H-2-44735	Engineering Diagram, Storage Tanks
H-2-44737	Tank Farm Plot Plan
H-2-44739	Installation Details
H-2-44740	Instrument Enclosure, Plans & Elevations
H-2-44741	Planel Arrangement for Tank 101 & 102-AX
H-2-44742	Planel Arrangement for Tanks 103 & 104-AX
H-2-44743	Liquid Level Gage Arrangement
H-2-44744	Liquid Level Panel A4 Arrangement & Details
H-2-44745	Waste Storage Tank Sludge Level Indicator
H-2-44746	Waste Storage Tank Sludge Level Indicator Details

Project CAC-970 - Waste Routings and 241-AX-151 Diverter Station

Civil - Structural

Drawing No.	Title
H-2-44750	Purex Waste Routing Drawing Index
H-2-44751	Plan, 202-A Building Area
H-2-44752	Plan & Elevations, 241-AX-151 Diverter
H-2-44753	Diverter, Sections and Details
H-2-44754	Encasement and Details, South of 241-AX-151
H-2-44755	Encasement and Details, North of 241-AX-151
H-2-44756	Encasement and Details, West of 241-AX-151
H-2-44757	Encasement and Details, East of 241-AX-151
H-2-44758	Removable Cover Blocks
H-2-44759	241-AX-151 Diverter Liners
H-2-44760	241-AX-151 Diverter Liners & Details
H-2-44762	Instrument Enclosure Plans & Details
H-2-44764	Plan & Profile, Process Waste Lines, South of 202-A
H-2-44765	Plan & Profile, Process Waste Lines, South of 202-A
H-2-44766	Plan & Profile, Process Waste Lines from 202-A to 241-AX-151

TABLE II (Cont'd.)

DRAWING LIST

Civil - Structural (Cont'd.)

Drawing No.	Title
H-2-44767	Plan & Profile, Process Waste Lines from 202-A to 241-AX-151
H-2-44768	Encasement Sections & Details, 202-A to 241-AX-151
H-2-44769	Encasement Sections & Details, 202-A to 241-AX-151
H-2-44771	Railroad Crossing Details
H-2-44773	Plan & Profile, 241-AX-151 to 241-A Tanks
H-2-44774	Plan & Profile, 241-AX-151 to 241-A Tanks
H-2-44775	Encasement Sections & Details, 241-AX-151 to 241-A Tanks
H-2-44776	Encasement Sections & Details, 241-AX-151 to 241-A Tanks
H-2-44777	Encasement Culvert Corner Connection Details
H-2-44778	Plan & Profile, Line 8656, Main Encasement to 244-CR Vault
H-2-44779	Details, Line 8656, Main Encasement to 244-CR Vault
H-2-44780	Miscellaneous Details & Process Piping
H-2-44781	Miscellaneous Fabrication Details, 241-AX-151 to 241-A Tanks
H-2-44785	Plot Plan & Finished Grading, 241-AX-151
H-2-44786	Process Pump-out Waste Lines to 241-AX-151
H-2-44787	Pump Pit Nozzle Locations

Mechanical

H-2-44789	241-AX-151 Piping and Equipment Arrangement Plans
H-2-44790	241-AX-151 Piping and Equipment Arrangement Plans
H-2-44791	241-AX-151 Piping and Equipment Arrangement Sections
H-2-44792	241-AX-151 Piping and Equipment Arrangement Sections
H-2-44793	241-AX-151 Process Waste Lines, Sections & Details
H-2-44795	241-AX-151 Spout & Miscellaneous Details
H-2-44796	241-AX-151 Diverter Assembly and Details
H-2-44798	Diverter Tank Assembly
H-2-44799	Diverter Tank Details
H-2-44801	Pump-out & Jet Jumper P-151-AX-D1 & P-151-AX-J
H-2-44814	R-Cell Piping P-345-3"-P to Line 4023-3"
H-2-44815	3" Jumper U7 to U11

TABLE II

DRAWING LIST

Mechanical (Cont'd.)

Drawing No.	Title
H-2-44816	Process Waste Lines South of 202-A
H-2-44817	Sections & Details, 202-A to 241-AX-151
H-2-44818	Plans & Details, 202-A to 241-AX-151
H-2-44819	Waste Lines, Sections & Details
H-2-44820	Process Piping Plan, 241-AX-151 to 241-A Tank Farm
H-2-44821	Piping Details, 241-AX-151 to 241-A Tank Farm
H-2-44823	Piping Details, 241-AX-151 to 241-A Tank Farm
H-2-44824	Process Waste Lines, Sections & Details

Electrical-Instrumentation

H-2-44825	Plan & Sections, 202-A
H-2-44826	Block & Elementary Diagrams
H-2-44827	Connection Diagram, EMV-151
H-2-44828	Plan & Elevations, Head-End Control Room
H-2-44829	Plan & Elevations, Central Control Room
H-2-44830	Control Panel Arrangement
H-2-44831	Plan & Details, Electrical
H-2-44833	Jumper for Pump Pit
H-2-44836	Instrumentation - Panel Arrangement
H-2-44837	Plan & Elevation

Purex Cell Jumpers for Waste Routing System

H-2-53602	Jumper Assembly - G-G193-G8
H-2-57787	Jumper Assembly - E-G101-E1
H-2-58458	Jumper Assembly - E-T55-E1
H-2-58459	Jumper Assembly - E-T24-E3
H-2-58460	Jumper Assembly - E-G58-E3
H-2-58461	Jumper Assembly - E-T30-E3
H-2-58462	Jumper Assembly - E-T12-E-T13
H-2-58463	Jumper Assembly - G-T19-G8
H-2-58464	Jumper Assembly - D-T27-D-T33
H-2-58465	Jumper Assembly - F-T21-F18
H-2-58466	Jumper Assembly - F-G9-F18
H-2-58467	Jumper Assembly - F-T22-F16
H-2-58468	Jumper Assembly - F-G22-F16
H-2-58469	Jumper Assembly - Hot Pipe Trench T031-E-106
H-2-58470	Jumper Assembly - Hot Pipe Trench T029-D176
H-2-58471	Jumper Assembly - Hot Pipe Trench G356-G341

TABLE II

DRAWING LIST

Purex Cell Jumpers for Waste Routing System (Cont'd.)

Drawing No.	Title
H-2-58472	Jumper Assembly - Hot Pipe Trench G026-F372
H-2-58473	Jumper Assembly - Hot Pipe Trench T037-F371

TABLE III

LIST OF FIGURES

Figure No.	
1	Area Plan
2	Plot Plan
3	Engineering Flow Diagram
4	Engineering Flow Diagram
5	Engineering Flow Diagram
6	Dome Plan
7	Composite Tank Section
8	Leak Detection Pit
9	Air-Lift Circulators
10	Purex Canyon Waste Routings
11	241-AX-151 Diverter Station
12	241-AX-152 Diverter Station
13	Instrument Engineering Flow Diagram-Tanks
14	Instrument Engineering Flow Diagram-Diverter Stations
15	Panel Board Tanks 101 and 102-AX
16	Panel Board Tanks 101 and 102-AX - 152-AX Diverter Station
17	Panel Board 151-AX Diverter Station
18	Sludge Level Indicator
19	Air Compressor Elementary
20	AX-Tank Farm Electrical Elementary
21	Electrical Elementary-241-AX-151 Diverter

QTY.	ITEM NO.	DESCRIPTION

NOTES

1.- FOR GENERAL PIPING ARRANGEMENT FOR PROJECT CAC-945, SEE DWG'S. H-2-44628, H-2-44629 & H-2-44646

2.- FOR FINISH GRADING SEE DWG. H-2-44552

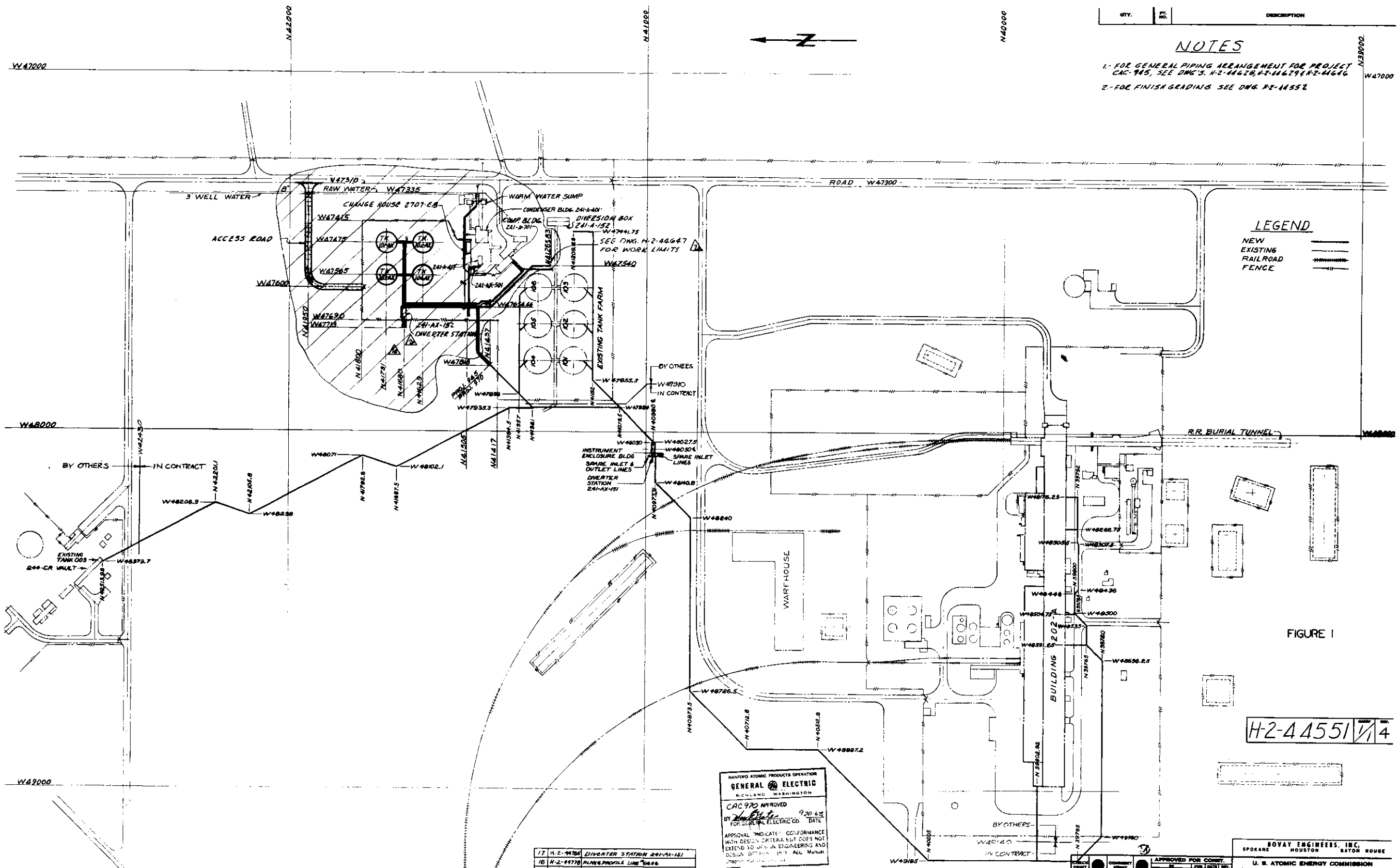

FIGURE 1

H-2-44551 1/1 4

17	H-2-44756	DIVERTER STATION 241-AX-151
16	H-2-44778	PLAN & PROFILE LINE "D&E"
15	H-2-44774	PLAN & PROFILE 241-AX-151 TO 241-A TANKS
14	H-2-44773	PLAN & PROFILE 241-AX-151 TO 241-A TANKS
13	H-2-44767	ENCASNT PLAN & PROFILE 241-AX-151
12	H-2-44766	ENCASNT PLAN & PROFILE 241-AX-151
11	H-2-44765	ENCASNT PLAN & PROFILE SOUTH 202A
10	H-2-44764	ENCASNT PLAN & PROFILE SOUTH 202A
9	H-2-44750	DRAWING INDEX
8	HWS 7337	CONSTRUCTION SPECS.
REV. NO.	DWG. NO.	DRAWING TITLE

REFERENCE DRAWINGS

PROJECT CAC-970

NO.	DESCRIPTION	REV. BY DATE	APP'D BY	POR	DATE
4	PROJ 945 AREA ENSHRD D&E2 DELETED ADDED CONTRACT BOUNDARIES				
3	PROJECT 970 ADDED	RCD 7/16/62			
2	REF. DWG. LIMIT MOVE ADDED (BWAS DIVERSION BOX CHANGED)	JBS	RE M. RC MATS	BWAS CRBU	7/16/62 7/16/62
1	(a) REF #5 REMOVED REMOVED (b) PHASE II PORTION OF DWGS	JWB 2/13/62	AHB	BWAS CRBU	2/13/62 11-8-62 3-2-62

REVISIONS

REV. NO.	DWG. NO.	DRAWING TITLE
7	H-2-44647	PLAN & PROFILE VENT HOOD, DRAIN & EMB
6	H-2-44646	GENERAL PIPING ARRANGEMENT
5	H-2-44629	GENERAL PIPING ARRGT.
4	H-2-44552	PLOT PLAN, FIN. GRADS. & FACILITIES
3		
2	H-2-44550	DRAWING INDEX
1	HWS-8237	CONSTRUCTION SPECS.

REFERENCE DRAWINGS

NEXT USED ON

HANFORD ATOMIC PRODUCTS OPERATION
GENERAL ELECTRIC
RICHLAND WASHINGTON

CAC 970 APPROVED
BY ... 9.20.62
FOR GENERAL ELECTRIC CO. DATE

APPROVAL INDICATES CONFORMANCE WITH DESIGN CRITERIA BUT DOES NOT EXTEND TO ORIGINAL ENGINEERING AND DESIGN DETAILS (R.H. Acc. Manual)

CHECK PRINT — COMMENT PRINT — APPROVED FOR CONST.

SCALE 1" = 100 FT

DRAWN B. WEIGLEY

APPROVED FOR PURCHASE

APPROVED FOR DESIGN

PROJECT CAC-945 W-30219

CLASSIFICATION NONE

BOVAY ENGINEERS, INC.
SPOKANE HOUSTON BATON ROUGE

U. S. ATOMIC ENERGY COMMISSION
HANFORD ATOMIC PRODUCTS OPERATION
GENERAL ELECTRIC

GENERAL AREA PLAN

PUREX 241-AX TANK FARM

PLANT NO. 241-AX PURPOSE NO. 0110

DWG. NO. H-2-44551 REV. NO. 1

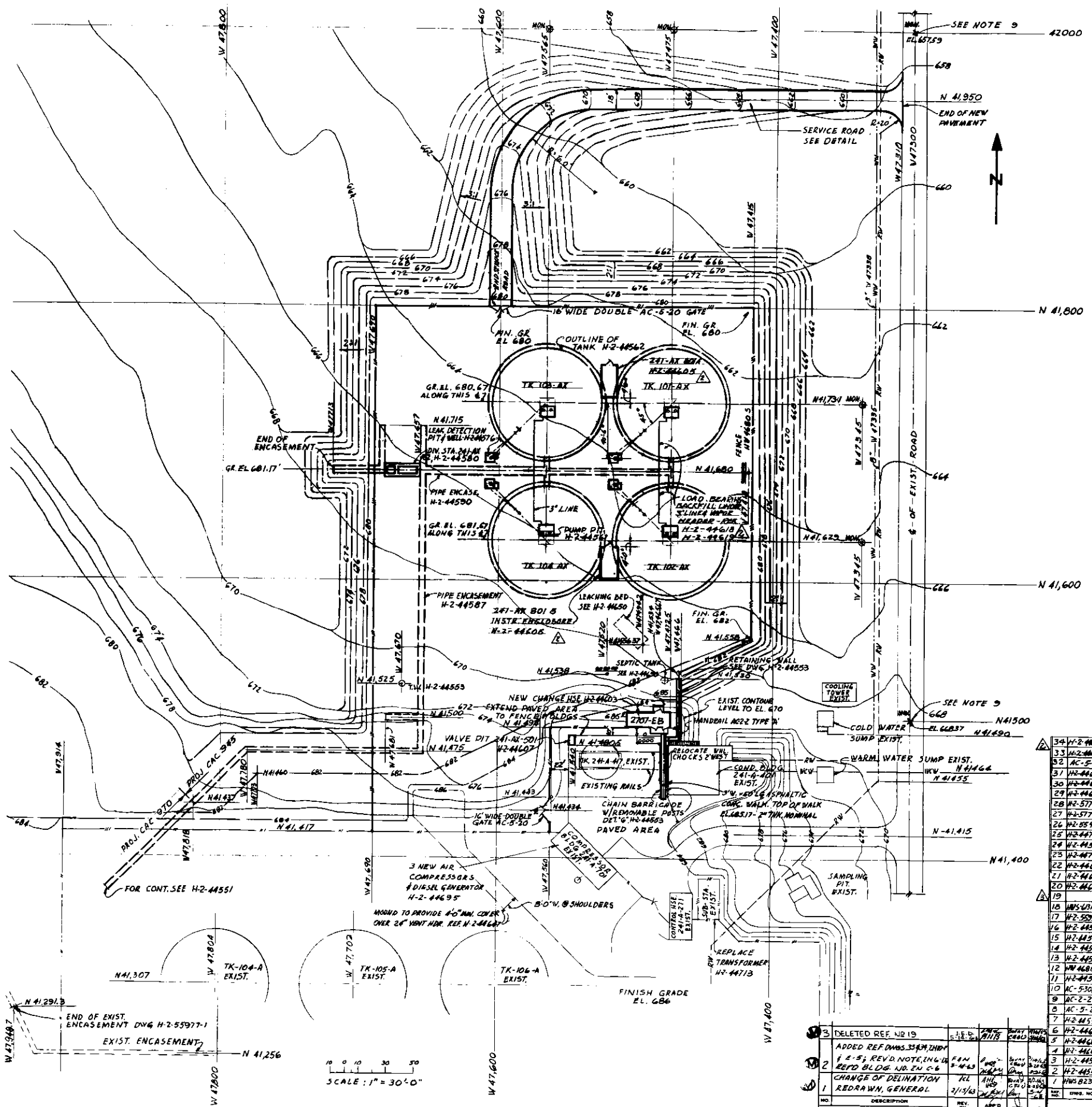

QTY.	PT. NO.	DESCRIPTION

LEGEND

- HEAVY LINES DENOTE NEW CONSTRUCTION
- LIGHT LINES DENOTE EXIST FACILITIES
- T.W. — RADIOLOGICAL TEST WELL
- EXISTING CONTOUR LINE
- FINISHED CONTOUR LINE
- CHAIN LINK FENCE SPEC. HW 4680-S, LESS BARBED WIRE TOPPING
- FLOODLIGHTING - NEW CONSTRUCTION
- FLOODLIGHTING - EXISTING
- RW — EXISTING 8" RAW WATER LINE - H-2-55994
- WW — EXISTING 3" WELL WATER LINE - H-2-57736 & H-2-57738
- MON. — EXISTING HORIZONTAL AND VERTICAL CONTROL MONUMENTS
- MON. — NEW HORIZONTAL AND VERTICAL CONTROL MONUMENTS SHALL BE STAMPED WITH NUMBER AND LETTER DYES TO SHOW ELEVATIONS AND COORDINATES TO THE NEAREST ONE HUNDREDTH OF A FOOT. MONUMENTS SHALL BE INSTALLED IN ACCORDANCE WITH HANFORD WORKS STD'S. AC-5-30 AND AC-5-31 WITH BARRICADE POST PER AC-5-3 TYPE II.

GENERAL NOTES

1. FOR PIPING THIS AREA SEE DWGS. H-2-44628, H-2-44629 & H-2-44646 FOR ELECTRICAL SEE H-2-44708.
2. SHOULDER OF SLOPES SHALL START 5' FROM FENCE
4. ALL CUTS SHALL BE AT A SLOPE OF 1½:1
   ALL FINISH FILLS SHALL BE SLOPED @ 2:1 EXCEPT AS NOTED
5. SUBGRADE FOR SERVICE ROAD SHALL CONFORM TO HWS 8237
6. BASE COUSE, LEVELING COURSE & ASPHALT CONCRETE PAVING SHALL CONFORM TO HANFORD STD. SPECS. HWS 6131-S.
7. CHANGE HOUSE 2707-EB SHALL BE BUILT ON LOAD BEARING BACKFILL WHICH SHALL EXTEND TO AT LEAST FIVE FEET OUTSIDE BUILDING FOUNDATION AT LEVEL OF FINISH GRADE.
8. CHAIN LINK FENCE STD. HW 4680-S SHALL APPLY FOR FENCE AND INSTALLATION LESS BARBED WIRE TOPPING.
9. MONUMENTS @ N 41500 & N 42000 BY W 47300 ARE COVERED BY LAST SHOT & COVER ROAD SURFACING & WILL HAVE TO BE LOCATED & UNCOVERED
10. FINISHED GRADE SHALL BE SLOPED UNIFORMLY FROM NORTH TO SOUTH AS PER ELEVATIONS SHOWN.

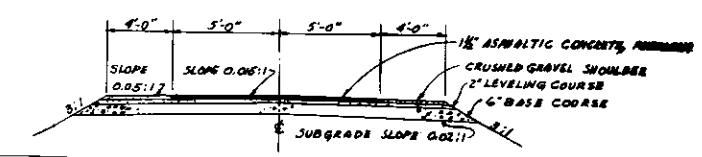

SERVICE ROAD DETAIL

NO	DESCRIPTION	REV. BY	DATE	APD BY	DATE
3	DELETED REF. N 19	J.E.D.	5-18-62		
2	ADDED REF. DWGS. 35 & 39, INDEX & 1-5; REV. & NOTE, IN G.E. REFD BLDG. UD. ZN C-6	E.J.N.	8-14-63		
1	CHANGE OF DELINATION & REDRAWN, GENERAL	R.L.	2/13/63		

REVISIONS

REF. NO	DWG. NO.	DRAWING TITLE
34	H-2-44647	DIRECT BURIED PIPING PL-710
33	H-2-44648	DIRECT BURIED PIPING PL-710
32	AC-5-3	BARRICADE POST - TYPE II
31	H-2-44627	PL. & PR. VENT HDR. & DRAIN LINES
30	H-2-44651	PLAN & PROF. - RW & PW TO 241-AX-187
29	H-2-44650	PLAN & PROF. - R.W. & DRAIN LINES
28	H-2-57738	PROFILE UNDERGROUND LINES
27	H-2-57736	KEY PLAN (3" WELL WATER
26	H-2-55994	8" RAW WATER - PLAN & PROFILE
25	H-2-44713	ELECT. SECTIONS & DETAILS
24	H-2-44590	FOOTING PLAN & ELEVATIONS
23	H-2-44708	ELEC. TANK FARM PLOT PLAN
22	H-2-44695	EQUIP & PIPING - PLAN & DETAILS
21	H-2-44646	GEN. PIPING ARRG'T.
20	H-2-44628	GEN. PIPING ARRG'T.
19		
18	HWS-U31-S	HOT LAID ASPH. CONC. PAVEMENT
17	H-2-55977	TIE LINE PLAN, PROF. 2414-182 TO 2414
16	H-2-44587	PROCESS WASTE ENCAS. PLAN & PROF.
15	H-2-44580	DIVERTER STA. 152 STRUCT. CONC.
14	H-2-44576	LEAK DETECTION SYSTEM ARRG'T.
13	H-2-44562	WASTE STORAGE TK COMP. SECT.
12	HW 4680-S	CHAIN LINK SECURITY FENCE
11	H-2-44561	STRUCTURAL PUMP PIT
10	AC-5-30 (31)	BENCH MARK & MONUMENT
9	AC-2-2	PIPE HANDRAIL
8	AC-5-20	STD. SECURITY CHAIN LINK GATE
7	H-2-44551	GENERAL AREA PLAN
6	H-2-44607	STRUCT. DETS. VALVE PIT (501)
5	H-2-44605	ARCH. DETS. - INSTR. ENCLOSURE
4	H-2-44603	ARCH. PLAN SECT. CHANGE HOUSE
3	H-2-44553	TEST WELL, RET. WALL & DET'S.
2	H-2-44550	DWG. INDEX
1	HWS 8237	CONST. SPECS.

REFERENCE DRAWINGS

NEXT USED ON H-2-44551

CHECK PRINT		COMMENT PRINT	
ISSUE NO	DATE	ISSUE NO	DATE
SCALE 1" = 30'-0"			
DRAWN E. Weimeyer		DATE 6-26-62	
CHECKED JWB		DATE 6-26-62	
APPROVED A.H. Kintz		DATE 6-26-62	
DESIGN NO. Arch Rep't		DATE 6-26-62	
PROJECT CAC 945	SHEET NO. W30219		
DESIGNED BY G.H. Bauer		DATE 7-30-62	

APPROVED FOR CONST. — BY / DATE / REV. 3
APPROVED FOR PURCHASE — BY / DATE
APPROVED FOR DESIGN — BY / DATE
A.H. Kintz — 7-31
A.H. Kintz — 8-13-62
U.S. CLASSIFICATION: NONE

BOVAY ENGINEERS, INC.
SPOKANE HOUSTON BATON ROUGE
RICHLAND OFFICES, BLDG. 2-2

U. S. ATOMIC ENERGY COMMISSION
HANFORD ATOMIC PRODUCTS OPERATION
GENERAL ELECTRIC

PLOT PLAN FINISHED GRADING AND FACILITIES

PUREX 241 TANK FARM

BLDG. NO. 241-AX — TRADE NO. 0110.01

DWG. NO. H-2-44552 — REV. NO. 3 — ADDENDA —

H-2-44552 | REV. 3

FIGURE 2

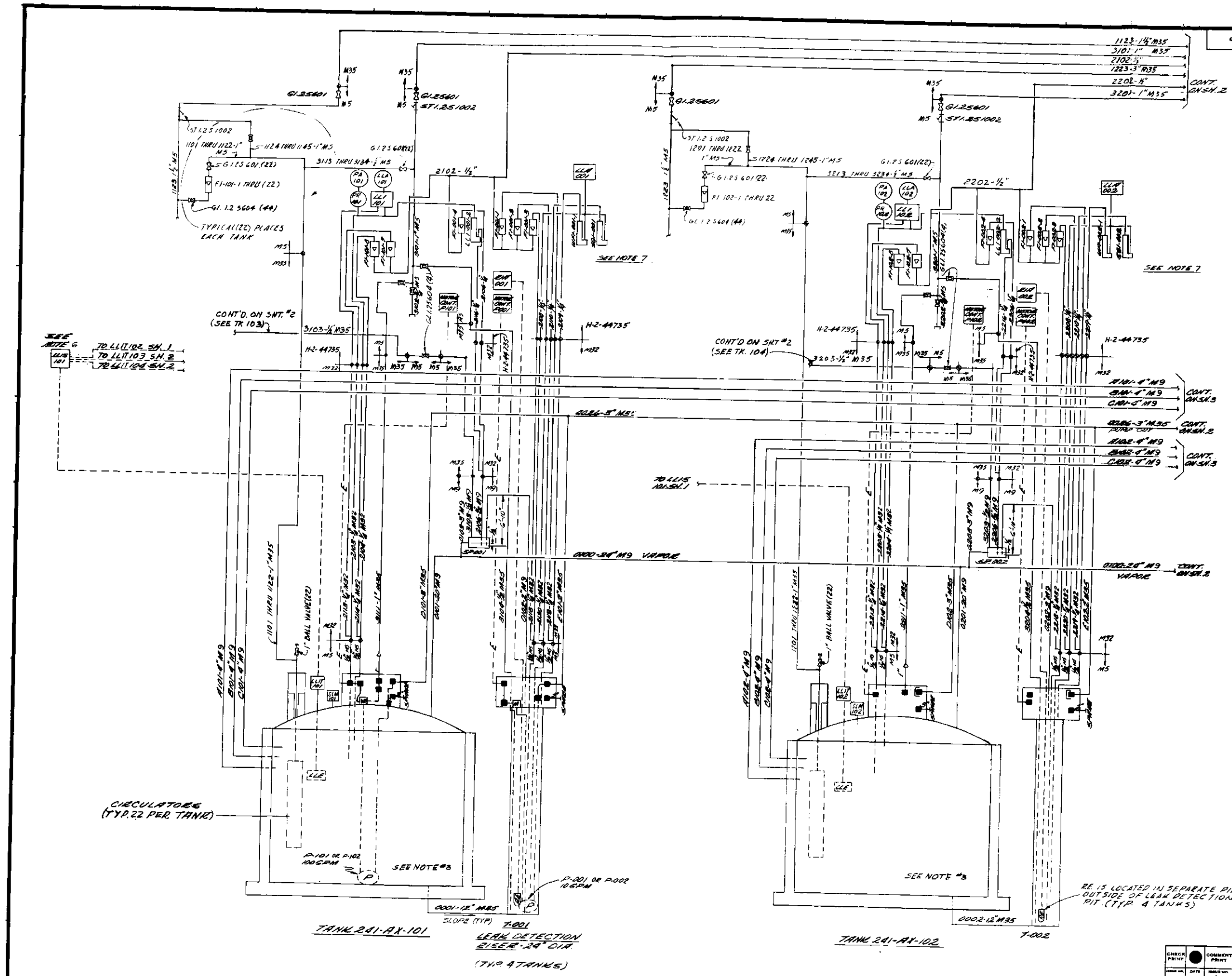

QTY.	FT. NO.	DESCRIPTION

LEGEND

♦	PIPE MATERIAL CODE CHANGE
PA	PRESSURE ALARM
■	REMOTE CONNECTOR
FI	FLOW INDICATOR
EIA	RADIATION INDICATOR ALARM
RE	RADIATION ELEMENT
WFI	WEIGHT FACTOR INDICATOR
SGI	SPECIFIC GRAVITY INDICATOR
LLA	LIQUID LEVEL ALARM
LLE	LIQUID LEVEL DISPLACEMENT ELE'MT.
LLIT	LIQUID LEVEL INDICATOR TRANSMITTER
LLIS	LIQUID LEVEL INDICATOR CONSOLE
SLM	SLUDGE LEVEL REEL & TAPE
M	MOTOR
P	PUMP
PI	PRESSURE INDICATOR
PT	PRESSURE TRANSMITTER
PR	PRESSURE RECORDER
--E--	ELECTRICAL
⋎	SPRAY NOZZLE
■	BLANK FEMALE CONNECTOR
SP	SEAL POT
FD	FLOOR DRAIN
EMV	ELECTRIC MOTOR OPERATED VALVE
[	HOSE CONNECTOR - QUICK COUPLING
LLI	LIQUID LEVEL INDICATOR

LINE SERVICE

00XX	DRAIN LINE
0XXX	VENT OR VAPOR LINE
1XXX	PROCESS AIR LINE
2XXX	INSTRUMENT AIR LINE
3XXX	RAW WATER LINE
4XXX	INTERCONNECTING LINE
AXXX	FILL LINE FROM DIVERTER A
BXXX	" " " " B
CXXX	SPARE FILL LINES
DXXX	TANK PUMP OUT
EXXX	LEAK DETECTION SUMP PUMP OUT
FXXX	CONDENSATE RETURN FROM VALVE BOX
XXXXF	FLUSH LINES FOR FUTURE CONNECTIONS

GENERAL NOTES

1. PIPE & VALVE CODES ARE ACCORD. TO H-2-31750 SHTS. 3, 9, 32, 33, 35, 36, 37 AND 38
2. ALL STAINLESS STEEL PIPE SHALL HAVE CATHODIC PROTECTION - ELECTRICAL DWGS.
3. FOR THERMOCOUPLES IN TANKS & LEAK DETECTION PITS SEE H-2-44735
4. SLOPE FILL & VENT LINES TO DRAIN TO TANKS.
5. CHANGE FROM UNDERGROUND PIPING CODES (M32 OR M35) TO ABOVE GROUND PIPING CODES (M5 OR M33) SHALL BE MADE 6" ABOVE FIN. GRADE, OR FIN. FLOOR, OR 6" INSIDE FACE OF WALL.
6. LLIS-101 & ALARMS TO BE LOCATED IN 241-R-271 CONTROL HOUSE. OTHER INSTR. LOCATED IN INSTR. ENCLOSURE. 241-AX-800A & 241-AX-801B
7. INSTR. AIR PRV STATION PIPING & EQUIPMENT DOWN STREAM OF PRV STATIONS SHOWN FOR REFERENCE ONLY - SEE H-2-44735

FIGURE 3

H-2-44612 | SHEET 1/3 | REV. 1

LINE NO. CODE

YXXX - Y" M ZZ

SERVICE (SEE ABOVE) — PIPE SIZE — MATERIAL CODE (SEE CORRESPONDING SHEET NO. OF H-2-31750)

EXAMPLE: LINE NO. 3204-½" M35 IS A RAW WATER ½" PIPE PER PIPING MATERIAL CODE M35. (SEE SHT. 35 OF H-2-31750)

NO.	DESCRIPTION	REV. BY	DATE	APPD BY	FOR	DATE
1	GENERAL DESIGN REVISIONS	JGL	2/14/62			

REVISIONS

6	H-2-31750	PIPING MATERIAL CODES	
3	H-2-46755	INSTR. LINE DIAGRAM STG. TANKS	
2	H-2-44730	DRAWING INDEX	
1	WHS-6229	CONSTRUCTION SPECIFICATIONS	
REF. NO.	DWG. NO.	DRAWING TITLE	

REFERENCE DRAWINGS

NEXT USED ON

CHECK PRINT	COMMENT PRINT	APPROVED FOR CONST.	
		APPROVED FOR PURCHASE	
SCALE NONE		APPROVED FOR DESIGN	
DRAWN J. S. Pace	DATE 6-1-62		
CHECKED	DATE 6-8-62		
APPROVED	DATE 6-8-62		
DATE 6-8-62			
PROJECT 241-AX			
CLASSIFIED BY H. A. Barnes		CLASSIFICATION NONE	
DATE 12-14-62			

BOVAY ENGINEERS — SPOKANE, HOUSTON, BATON ROUGE, RICHLAND OFFICE BLDG 133

U. S. ATOMIC ENERGY COMMISSION
HANFORD ATOMIC PRODUCTS OPERATION
GENERAL ELECTRIC

ENGINEERING FLOW DIAGRAM
241-AX TANK FARM
PUREX 241-AX TANK FARM

BLDG. NO. 241-AX — UNDER NO. 7001

DWG. NO. H-2-44612

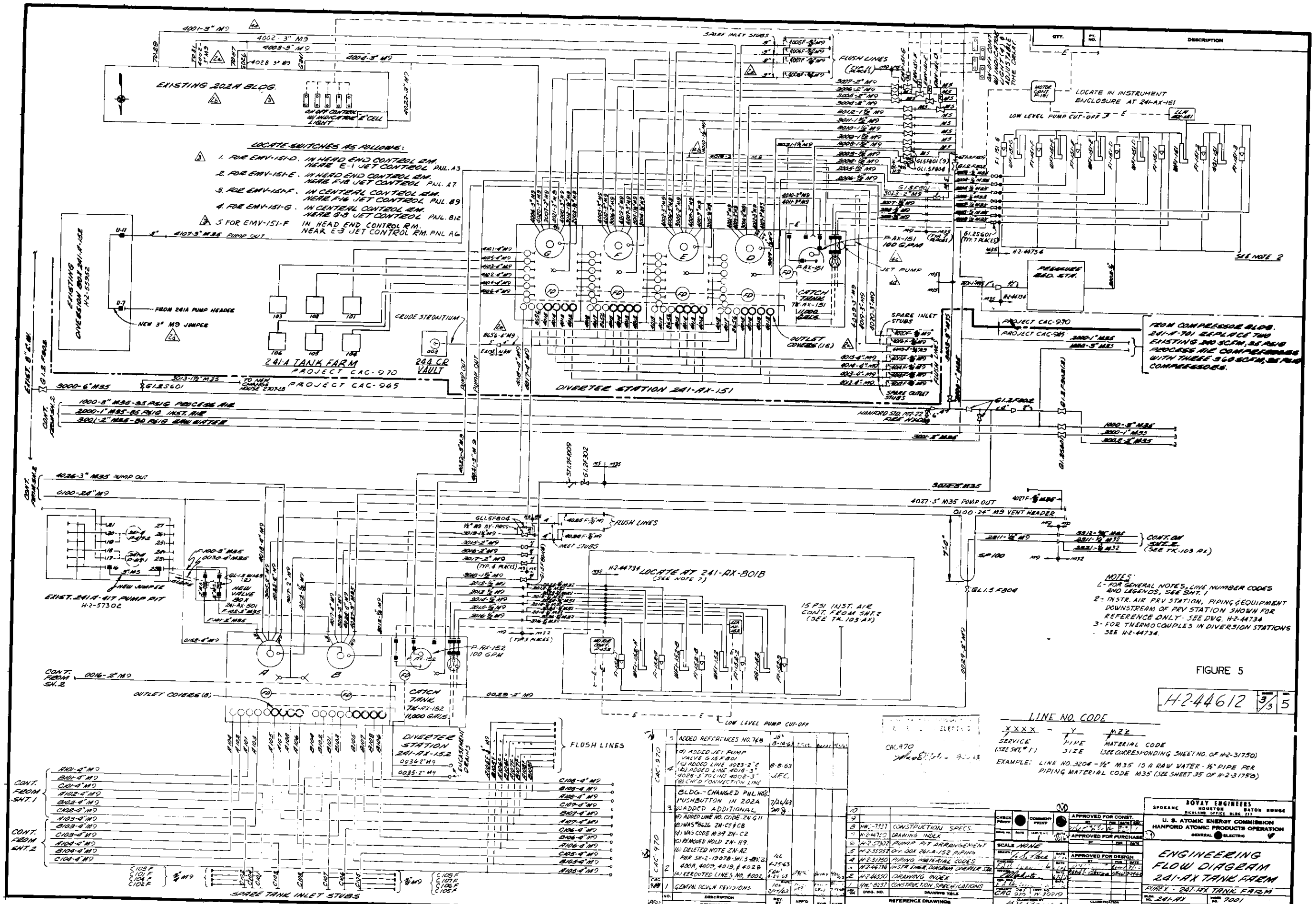
EXISTING 202A BLDG.
LOCATE SWITCHES AS FOLLOWS:
1. FOR EMV-151-D. IN HEAD END CONTROL RM. NEARE E-1 JET CONTROL PNL. A3
2. FOR EMV-151-E. IN HEAD END CONTROL RM. NEARE F-18 JET CONTROL PNL. A7
3. FOR EMV-151-F. IN CENTERAL CONTROL RM. NEARE F-16 JET CONTROL PNL B9
4. FOR EMV-151-G. IN CENTERAL CONTROL RM. NEARE G-8 JET CONTROL PNL. B12
5 FOR EMV-151-F IN HEAD END CONTROL RM. NEAR E-3 JET CONTROL RM. PNL A6
EXISTING CONVERSION BLDG. 241-A-152 H-2-53932
FROM 241A PUMP HEADER
NEW 3" M9 JUMPER
CRUDE STRONTIUM
241-A TANK FARM
PROJECT CAC-970
PROJECT CAC-945
244 CR VAULT
DIVERTER STATION 241-AX-151
P-AX-151 100 GPM
CATCH TANK TK-AX-151 11,000 GALS.
OUTLET COVERS (16)
SPARE INLET STUBS
SPARE OUTLET STUBS
FLUSH LINES
LOCATE IN INSTRUMENT ENCLOSURE AT 241-AX-151
LOW LEVEL PUMP CUT-OFF
JET PUMP
PRESSURE REG. STA.
SEE NOTE 2
FROM COMPRESSOR BLDG. 241-A-701 REPLACE TWO EXISTING 340 SCFM, 35 PSIG PROCESS AIR COMPRESSORS WITH THREE 360 SCFM, 35 PSIG COMPRESSORS.
1000-8" M35-35 PSIG PROCESS AIR
2000-1" M35-85 PSIG INST. AIR
3001-2" M35-80 PSIG RAW WATER
4026-3" M35 PUMP OUT
0100-24" M9
4027-3" M35 PUMP OUT
0100-24" M9 VENT HEADER
EXIST. 241-A-417 PUMP PIT H-2-57302
NEW JUMPER
NEW VALVE BOX 241-AX-501
P-AX-152 100 GPM
CATCH TANK TK-AX-152 11,000 GALS.
OUTLET COVERS (8)
LOCATE AT 241-AX-801B (SEE NOTE 2)
15 PSI INST. AIR CONT. FROM SHT. 2 (SEE TK. 103-AX)
CONT. ON SHT. 2 (SEE TK. 103 AX)
DIVERTER STATION 241-AX-152
FLUSH LINES
SPARE TANK INLET STUBS
CONT. FROM SHT. 1
CONT. FROM SHT. 2
NOTES:
1.- FOR GENERAL NOTES, LINE NUMBER CODES AND LEGENDS, SEE SHT. 1
2.- INSTR. AIR PRV STATION, PIPING & EQUIPMENT DOWNSTREAM OF PRV STATION SHOWN FOR REFERENCE ONLY - SEE DWG. H-2-44734
3- FOR THERMOCOUPLES IN DIVERSION STATIONS SEE H-2-44734.
LINE NO. CODE
XXXX - Y MZZ
SERVICE (SEE SHT. 1)
PIPE SIZE
MATERIAL CODE (SEE CORRESPONDING SHEET NO. OF H-2-31750)
EXAMPLE: LINE NO. 3204 - 1/2" M35 IS A RAW WATER 1/2" PIPE PER PIPING MATERIAL CODE M35 (SEE SHEET 35 OF H-2-31750)
ADDED REFERENCES NO. 748
ADDED JET PUMP
ADDED LINE 3023-2" E
ADDED LINE 4018-3" 4028-3" TO LINE 4002-3"
CH'D CONNECTION LINE
BLDG.-CHANGED PNL NOS.
PUSHBUTTON IN 202A
ADDED ADDITIONAL
ADDED LINE NO. CODE-ZN G11
WAS "BL26 ZN-C5 & C8
WAS CODE M39 ZN-C2
REMOVED HOLD ZN-H9.
DELETED NOTE ZN-A2
PER SK-2-19078-SHT. 3
400A, 4009, 4019, & 4028
REROUTED LINES NO. 4002.
GENERAL DESIGN REVISIONS
DESCRIPTION
REVISIONS
REV. BY DATE
APP'D BY
FOR
DATE
CAC-970
CAC-945
DWG. NO.
DRAWING TITLE
REFERENCE DRAWINGS
NEXT USED ON
H-2-44730 DRAWING INDEX
H-2-57302 PUMP PIT ARRANGEMENT
H-2-55252 DIV. BOX 241-A-152 PIPING
H-2-31750 PIPING MATERIAL CODES
H-2-44734 INSTR. ENGR. DIAGRAM DIVERTER STA.
H-2-46550 DRAWING INDEX
H-2-8237 CONSTRUCTION SPECIFICATIONS
CONSTRUCTION SPECS.
APPROVED FOR CONST.
APPROVED FOR PURCHASE
APPROVED FOR DESIGN
SCALE NONE
BOVAY ENGINEERS
SPOKANE HOUSTON BATON ROUGE
RICHLAND OFFICE BLDG. 217
U. S. ATOMIC ENERGY COMMISSION
HANFORD ATOMIC PRODUCTS OPERATION
GENERAL ELECTRIC
ENGINEERING FLOW DIAGRAM
241-AX TANK FARM
PUREX - 241-AX TANK FARM
PLAN NO. 241-A1
DWG. NO. 7001
H-2-44612
3/3
5

FIGURE 5

QTY.	REF. NO.	DESCRIPTION

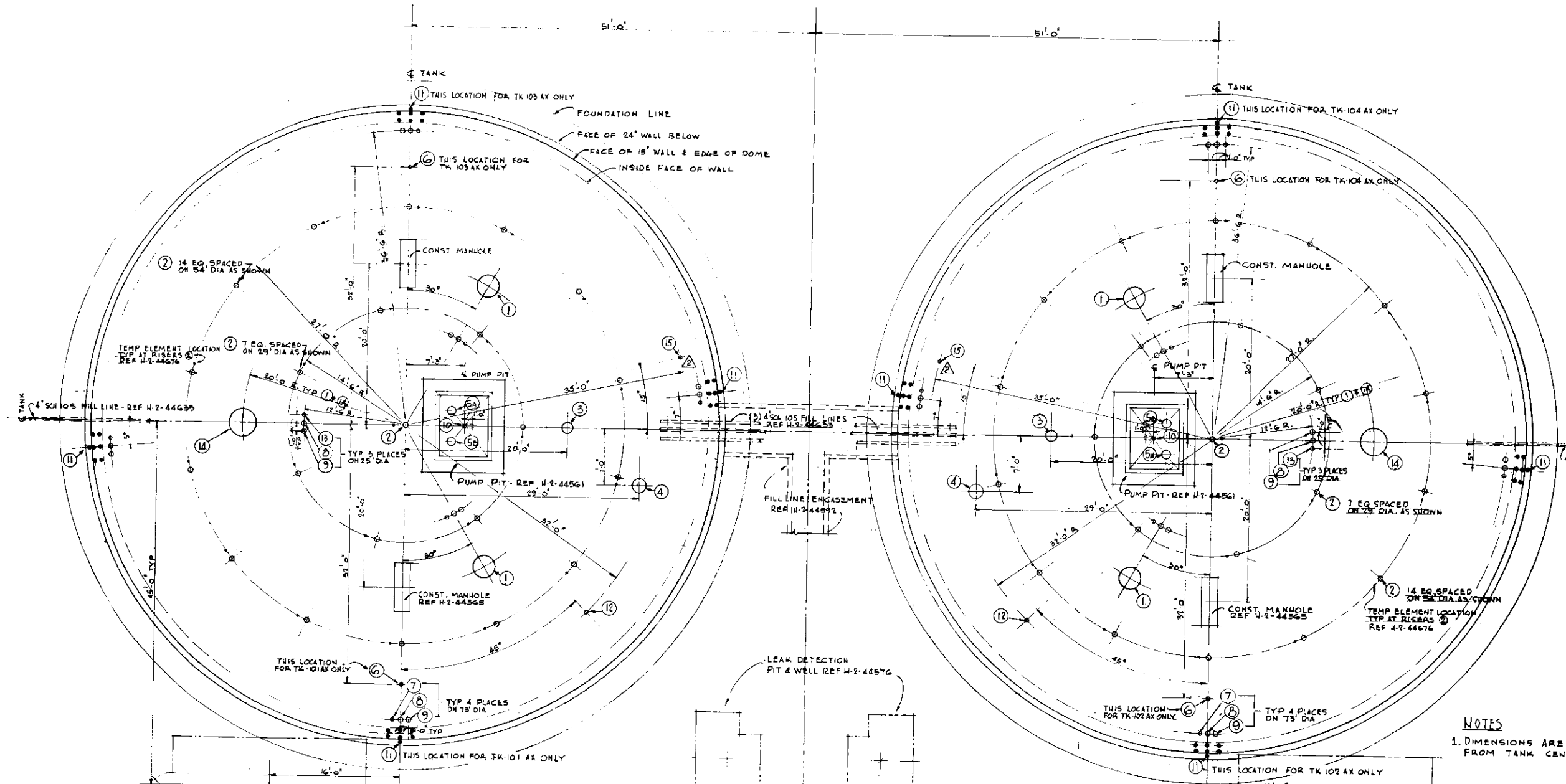

DOME PLAN
TANKS 101-AX & 103 AX

DOME PLAN
TANKS 102-AX & 104-AX

NOTES

1. DIMENSIONS ARE HORIZONTAL FROM TANK CENTERLINES

FIGURE 6

DOME RISER SCHEDULE				
MARK	QTY EA TANK	SIZE	FUNCTION	REF DWG
1	2	34" I.D. 3/8" WALL	SLUDGE SLUICE	H-2-44570
2	22	6" SCH 40	AIR LIFT CIRCULATOR	570
3	1	16" SCH 10	LIQUID LEVEL GAGE	570
4	1	20" SCH 10S	VAPOR OUTLET	570
5A/B	1	12" SCH 20	PUMP MOUNT	570
6	1	4" SCH 40	TANK PRESSURE	571
7	4	4" SCH 40	PROFILE TEMPERATURE ELEMENT	571
8	7	6" SCH 40	DRY WELL	571
9	7	6" SCH 40	SLUDGE LEVEL GAGE	571
10	1	4" SCH 40	PUMP PIT DRAIN	571
11	3	7-1/4" CONDUITS EA LOCATION	STRUCTURAL THERMOCOUPLES	571
12	1	4" SCH 40	LEAK DETECTION PIT DRAIN	571
13	3	4" SCH 40	TEMPERATURE ELEMENT	571
14	1	42" I.D. 1/2" WALL	SLUDGE SLUICE	H-2-44570
15	1	4" SCH 40	CONDENSATE ADDITION - (FUTURE)	H-2-44571

NO	DESCRIPTION	REV BY DATE	APPD BY	FOR	DATE
2	ADDED 4" RISER C-6 & C-8	7-18-63 DOC/LES 7-22-63			7-25-63
1	REDRAWN - GENERAL CHANGE OF DELINEATION	RW 9/13/65			

REVISIONS

HWS 8257	CONSTRUCTION SPEC
H-2-44552	PLOT PLAN & FIN. GRADING
H-2-44675	PROCESS & SERVICE PIPING
H-2-44676	AIR LIFT CIRCULATOR
H-2-44635	PROCESS WASTE LINES
H-2-44576	LEAK DETECTION PIT
H-2-44592	FILL LINE ENCASEMENT
H-2-44605	INST ENCLOSURE
H-2-44571	DOME RISERS & PLUGS
H-2-44570	DOME RISERS & PLUGS
H-2-44565	DOME REINFORCEMENT
H-2-44563	TANK DETAILS
H-2-44562	COMPOSITE TANK SECTION
H-2-44561	PUMP PIT
H-2-44550	DWG INDEX

DWG. NO. — DRAWING TITLE

REFERENCE DRAWINGS

NEXT USED ON

CHECK PRINT — COMMENT PRINT

APPROVED FOR CONST.
APPROVED FOR PURCHASE
APPROVED FOR DESIGN

SCALE 1" = 1'-0"

DRAWN E.C. MAILLARD
CHECKED G.W. WALLEY
ENGINEER G.W. BAUER
CAC 945

CLASSIFICATION NONE

U. S. ATOMIC ENERGY COMMISSION
HANFORD ATOMIC PRODUCTS OPERATION
GENERAL ELECTRIC

DOME PLAN

241 AX PUREX WASTE TANK FARM

BLDG. NO. 241 AX — ISSUE NO. 0402

DWG. NO. H-2-44560

COMPOSITE SECTION – AX FARM TANK

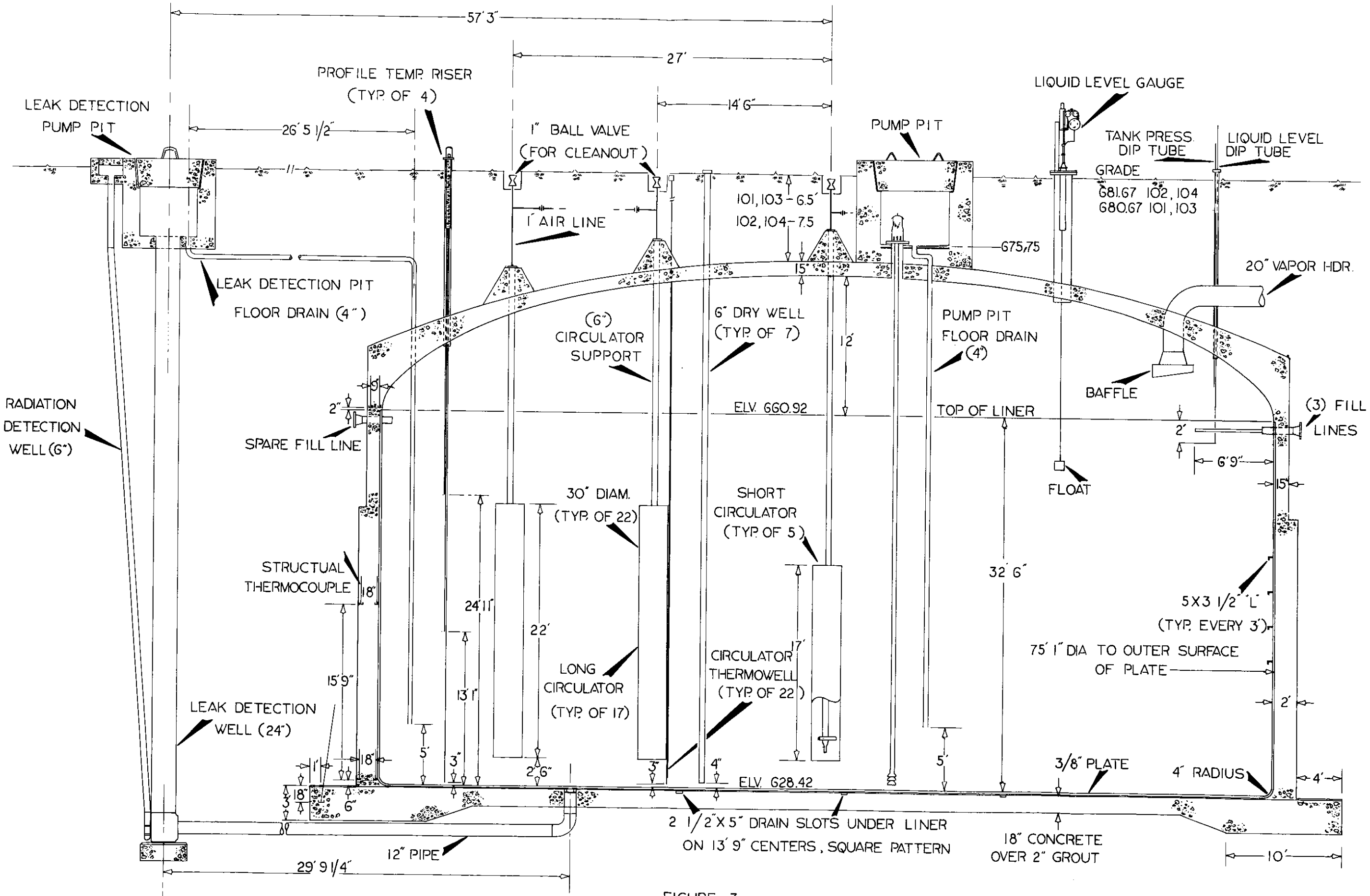

FIGURE 7

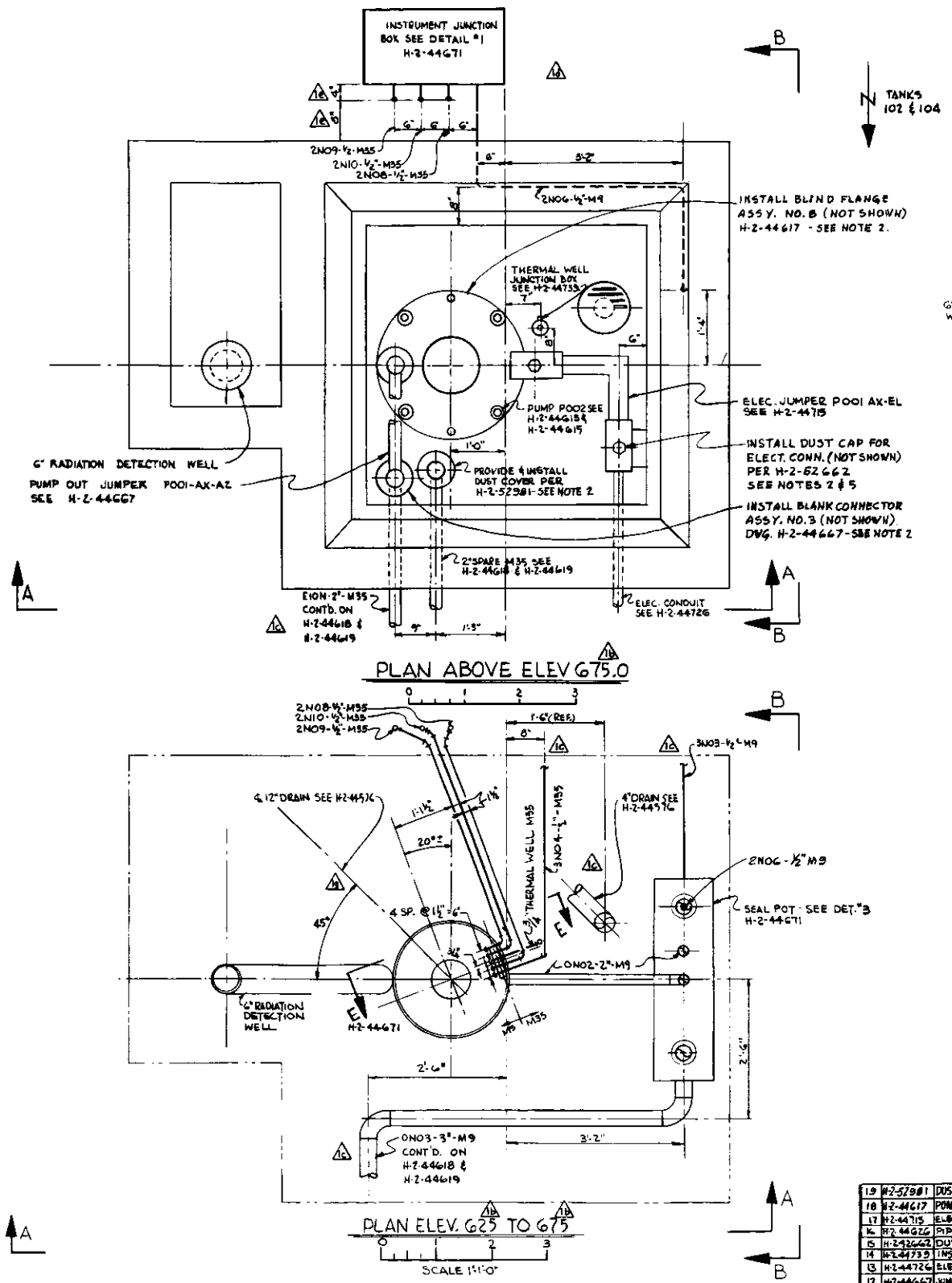

PLAN ABOVE ELEV 675.0

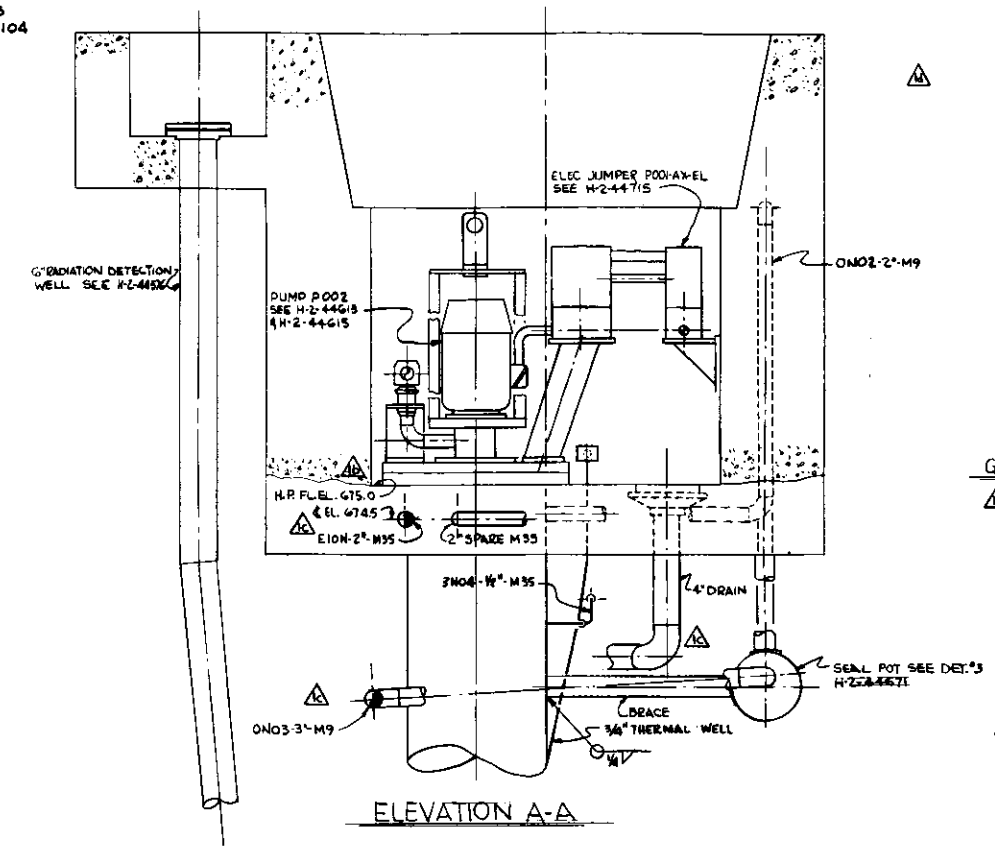

ELEVATION A-A

PLAN ELEV. 625 TO 675

SCALE 1"=1'-0"

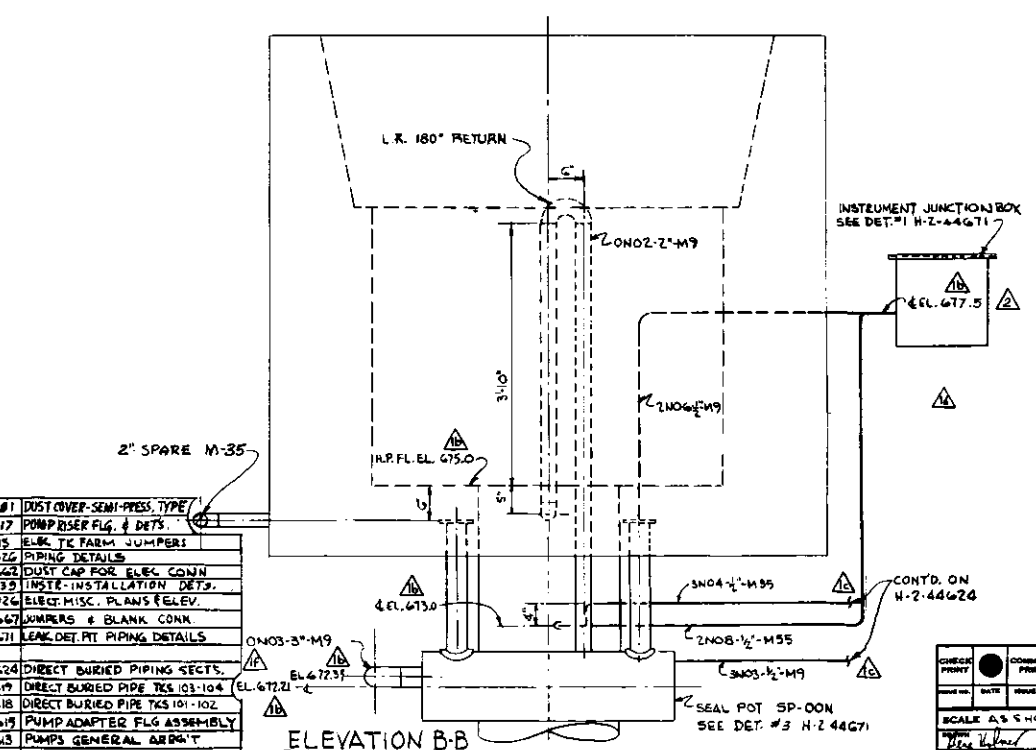

ELEVATION B-B

QTY.	ITEM NO.	DESCRIPTION

GENERAL NOTES:

1. THE PUMP & JUMPERS ARE SHOWN IN PLACE, HOWEVER, THEY SHALL BE INSTALLED IN ONE PIT TO CHECK FOR FIT ONLY & THEN REMOVED.
2. AT THE COMPLETION OF CONSTRUCTION EACH PIT SHALL HAVE A BLIND FLANGE INSTALLED OVER THE PUMP OPENING - A BLANK CONNECTOR HEAD INSTALLED ON THE 2" PUMP OUT NOZZLE, & THE DUST COVERS INSTALLED ON THE ELECTRICAL RECEPTACLE & 2" SPARE NOZZLE.
3. SEE H-2-44612 SH. 1 FOR LINE NUMBER CODE.
4. THE LETTER "N" IN THE LINE NUMBERS DENOTES THE LAST DIGIT OF THE TANK NUMBER.
5. APPLY VINYL COAT ON DUST CAP FOR ELECTRICAL CONNECTOR PER HWS 8237.
6. MATERIAL FOR LINE NO'S. E10N-2" SHALL BE PER CODE M35 USING SEAMLESS ASTM A53 GR. A OR B PIPE ONLY.

FIGURE 8

H-2-44670 | 7 | 2

REV.	DESCRIPTION	BY	DATE
2	WAS @ EL. 678.0 ZN. F-10	POE	4-4-63
1	(b) ADDED NOTE 6. (a) REROUTED 12" DRAIN ZONE 9E (f) CHANGED REF. DWG. 9 & 10 TO PHASE II (e) WAS 6" ZONE 2A ON03, & 3N04 (d) DELETED REF. (c) REROUTED LINES E10N, (b) RAISED EL. 1'0" GENERAL (a) REVISED & DIVIDED NOTE 1.	DRA.	3-1-63

NO.	DESCRIPTION	REV. BY DATE	APP'D. BY	FOR	DATE
	REVISIONS				

ITEM NO.	DWG. NO.	DRAWING TITLE
19	H-2-52381	DUST COVER-SEMI-PRESS. TYPE
18	H-2-44617	PUMP RISER FLG. & DETS.
17	H-2-44715	ELEC. TK FARM JUMPERS
16	H-2-44626	PIPING DETAILS
15	H-2-62662	DUST CAP FOR ELEC. CONN
14	H-2-44733	INSTR. INSTALLATION DETS.
13	H-2-44726	ELEC. MISC. PLANS & ELEV.
12	H-2-44667	JUMPERS & BLANK CONN.
11	H-2-44671	LEAK DET. PIT PIPING DETAILS
10		
9	H-2-44624	DIRECT BURIED PIPE SECTS.
8	H-2-44619	DIRECT BURIED PIPE TKS 103-104
7	H-2-44618	DIRECT BURIED PIPE TKS 101-102
6	H-2-44619	PUMP ADAPTER FLG ASSEMBLY
5	H-2-44613	PUMPS GENERAL ARRG'T
4	H-2-44612	SH. 1 ENG FLOW DIAGRAM
3	H-2-44576	STRUCTURAL LEAK DET. SYSTEM
2	H-2-44592	DRAWING INDEX
1	HWS 8237	CONSTRUCTION SPECS

REFERENCE DRAWINGS

NOT USED ON

BOVAY ENGINEERS, INC.
SPOKANE HOUSTON RATON ROUGE
RICHLAND OFFICE BLDG 737

U. S. ATOMIC ENERGY COMMISSION
HANFORD ATOMIC PRODUCTS OPERATION
GENERAL ELECTRIC

CHECK PRINT | COMMENT PRINT

APPROVED FOR CONST.
APPROVED FOR PURCHASE
APPROVED FOR DESIGN

SCALE AS SHOWN

CAC 945 | W30219 | 241-AX | 8407

CLASSIFICATION: NONE

LEAK DETECTION PIT PIPING & EQUIP ARRG'T TKS 102-104 AX

PUREX 241-AX TANK FARM

DWG. NO. H-2-44670 | REV. 2

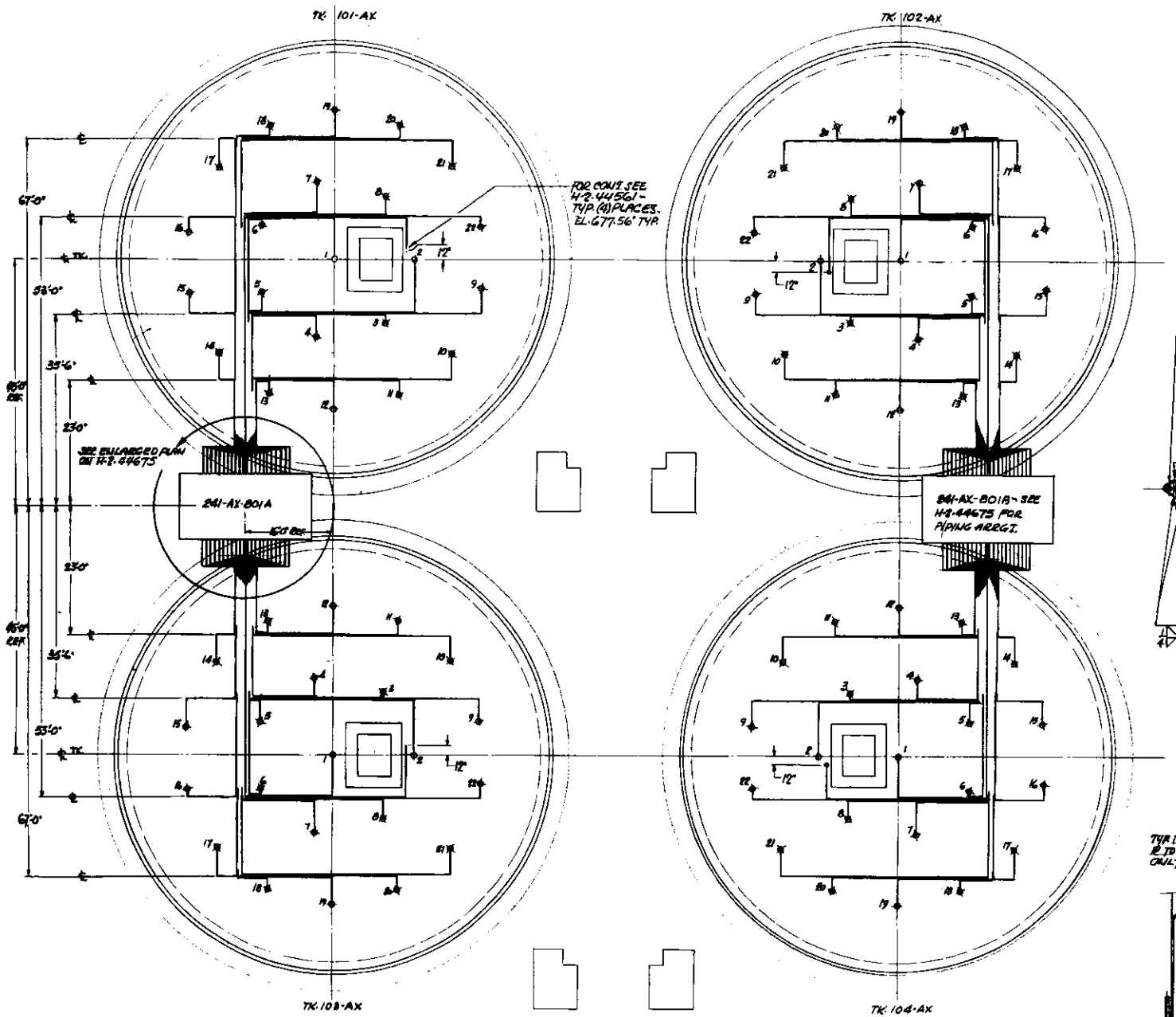

PLOT PLAN

0 10 FEET

N

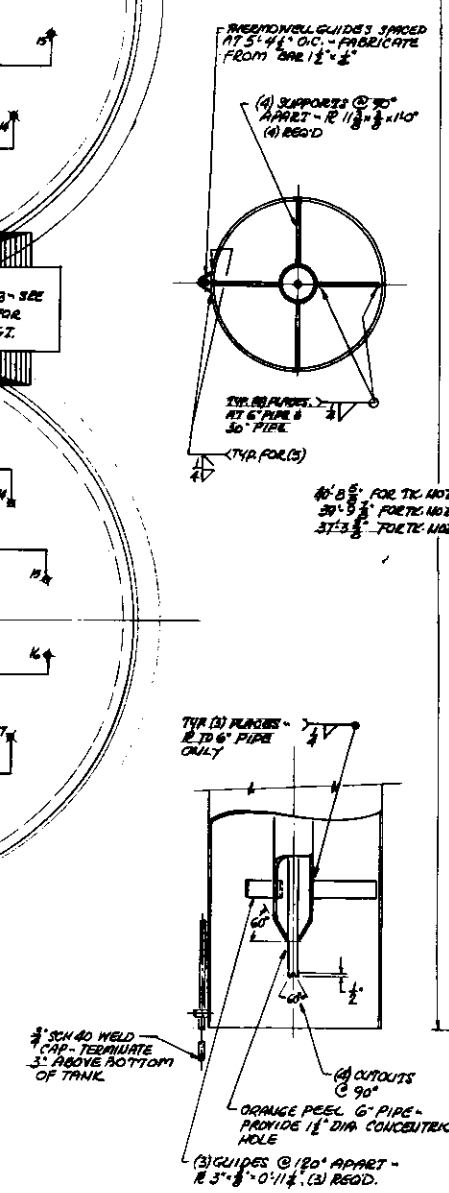

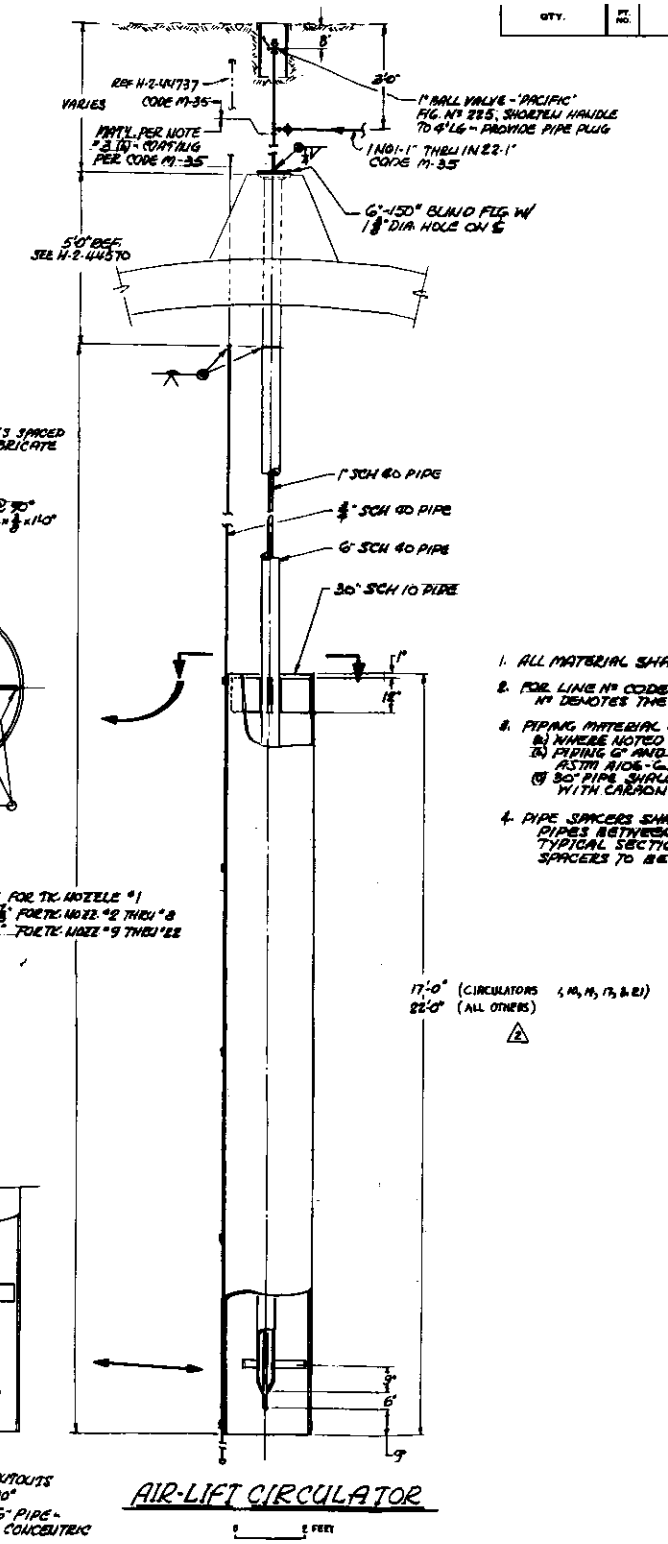

AIR-LIFT CIRCULATOR

0 2 FEET

QTY.	MT. NO.	DESCRIPTION

GENERAL NOTES

1. ALL MATERIAL SHALL BE AS SPECIFIED OR APPROVED EQUAL.
2. FOR LINE Nº CODE SEE H-2-44612 SHT. 1. THE LETTER "N" IN LINE Nº DENOTES THE LAST DIGIT OF THE TANK NUMBER.
3. PIPING MATERIAL SHALL BE AS FOLLOWS:-
   (a) WHERE NOTED ONLY, CODE M-5 AND M-35 PER H-2-31750).
   (b) PIPING 6" AND SMALLER (OTHER THAN M-5 AND M-36) SHALL BE ASTM A106-GR. B GRADE A.
   (c) 30" PIPE SHALL BE ASTM A135-GR. B GRADE EC-55, FIELD BOX QUALITY WITH CARBON CONTENT OF 0.18% TO 0.22%.
4. PIPE SPACERS SHALL BE PROVIDED ON ALL RUNS OF TWO OR MORE PIPES BETWEEN 241-A2-B01 A & B AND AIR LIFT CIRCULATOR PER TYPICAL SECTION "D-D" ON H-2-44675. MAXIMUM SPAN BETWEEN SPACERS TO BE (10) FEET.

FIGURE 9

H-2-44676 | 2

2	ADDED NOTE. ZONE 10-E	7-18-61			
1	AN DECLINEATION REDRAWN DUE TO CHANGE	8-23-60			
NO.	DESCRIPTION	REV. BY DATE	APPD BY	FOR	DATE

REVISIONS

H-2-44675	PROC. & SERVICE PIPING - AREA 5
H-2-44629	GEN. PIPING ARRGT. TK. FARM
H-2-44618	DIRECT BURIED PIPING
H-2-44612	SLUDGE FLOW DIAGRAM
H-2-44561	PUMP PIT
H-2-31750	PIPING MATERIAL CODE
H-2-44650	DRAFTING INDEX
HNS 8237	CONSTRUCTION SPEC.
DWG. NO	DRAWING TITLE

REFERENCE DRAWINGS

NEXT USED ON

CHECK PRINT — COMMENT PRINT

SCALE NOTED

DRAWN J.B. WEIGLEY

CHECKED J.P.R.

ISSUED A.H. KINTZ

ENG. ENG. J.B. WEIGLEY

PROJECT CNC 945

APPROVED FOR CONST.

APPROVED FOR PURCHASE

APPROVED FOR DESIGN

A.H. KINTZ

H.F. DETERMAN

CLASSIFICATION NONE

U. S. ATOMIC ENERGY COMMISSION
HANFORD ATOMIC PRODUCTS OPERATION
GENERAL ELECTRIC

AIR-LIFT PIPING ARRGT. & CIRCULATOR DETAILS

PUREX 241-A TANK FARM

241-AX

8510

H 2 44676

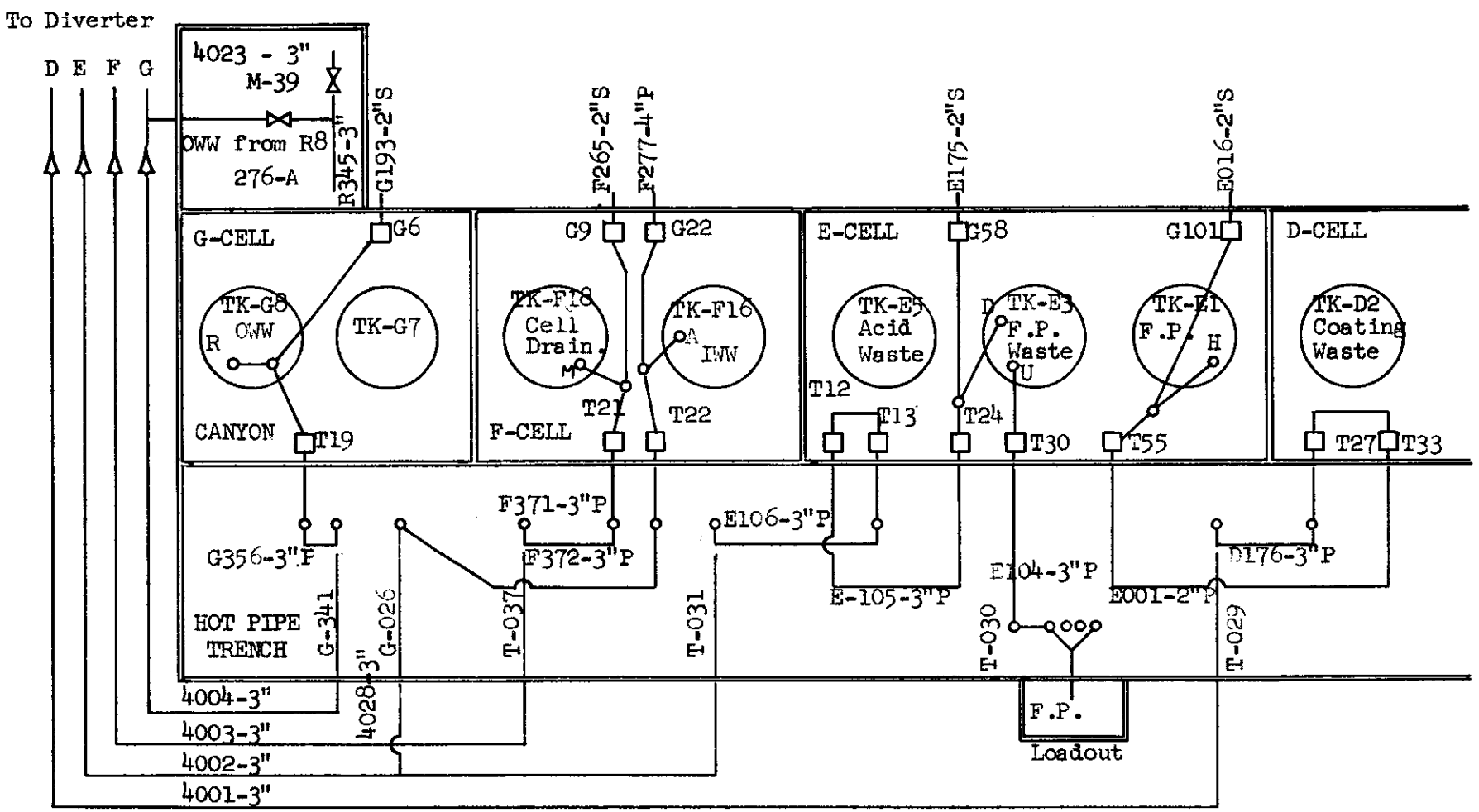

FIGURE 10

PUREX CANYON WASTE ROUTINGS

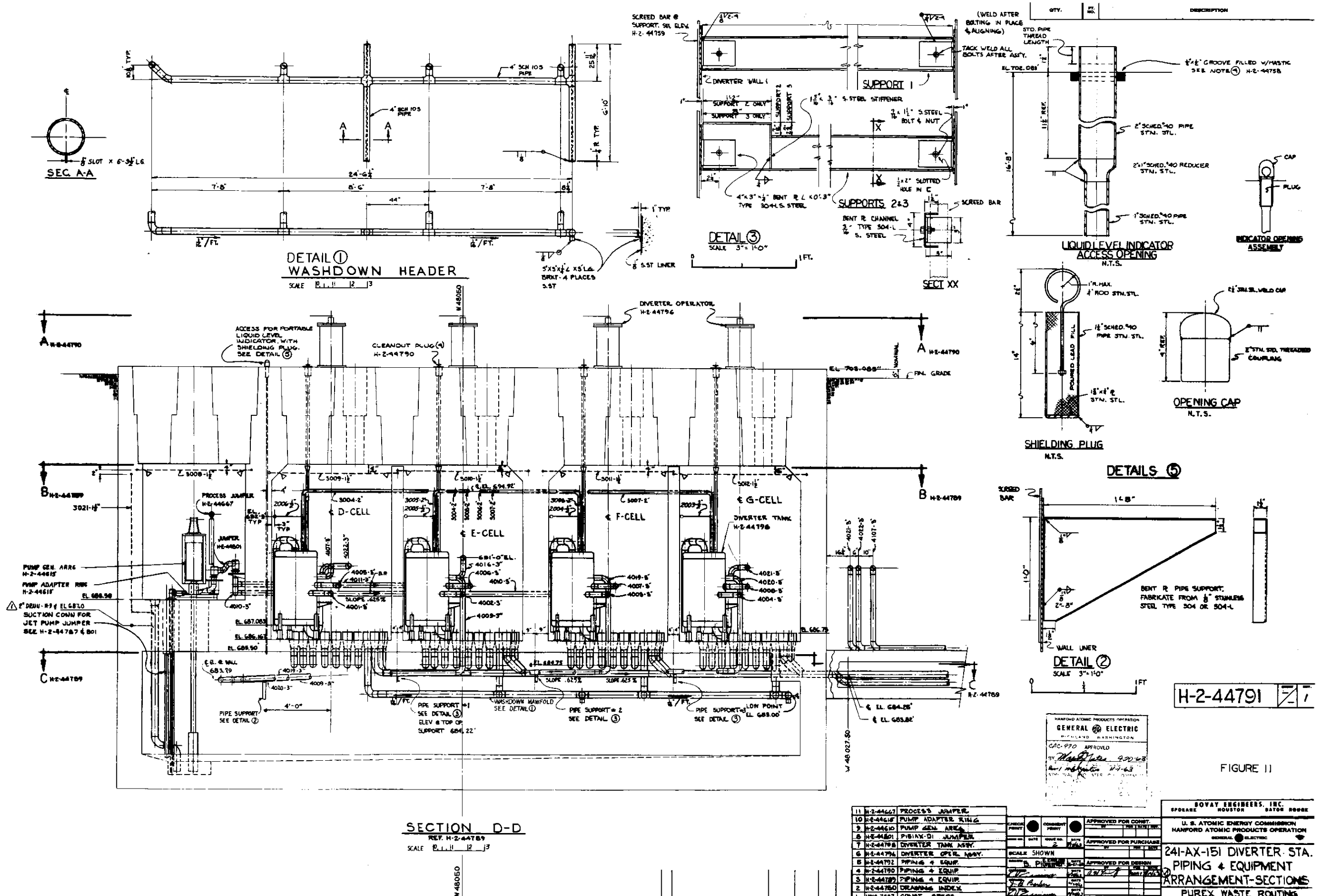

NO.	DRWG. NO.	DRAWING TITLE
11	H-2-44667	PROCESS JUMPER
10	H-2-44618	PUMP ADAPTER RING
9	H-2-44615	PUMP GEN. ARRG.
8	H-2-44801	PIBIAX-01 JUMPER
7	H-2-44798	DIVERTER TANK ASSY.
6	H-2-44796	DIVERTER OPER. ASSY.
5	H-2-44792	PIPING & EQUIP.
4	H-2-44790	PIPING & EQUIP
3	H-2-44789	PIPING & EQUIP.
2	H-2-44780	DRAWING INDEX
1	HW3-7557	CONST. SPECS.

REFERENCE DRAWINGS — NEXT USED ON H-2-44789

NO.	DESCRIPTION	PARING W/O	REV. BY DATE	APP'D BY	WATER	FOR	DATE
1	ADDED 2" DRAIN LINE F-1						

REVISIONS

CHECK PRINT — COMMENT PRINT — SCALE SHOWN — GAC-970 W40308

APPROVED FOR CONST. — APPROVED FOR PURCHASE — APPROVED FOR DESIGN — NONE

HANFORD ATOMIC PRODUCTS OPERATION GENERAL ELECTRIC RICHLAND WASHINGTON
GAC-970 APPROVED 9-20-63 — 11-1-63

BOVAY ENGINEERS, INC. SPOKANE HOUSTON BATON ROUGE

U. S. ATOMIC ENERGY COMMISSION
HANFORD ATOMIC PRODUCTS OPERATION
GENERAL ELECTRIC

241-AX-151 DIVERTER STA. PIPING & EQUIPMENT ARRANGEMENT-SECTIONS
PUREX WASTE ROUTING

PLANT NO. 241-AX-151 — DWG. NO. 0403 & 0404

H-2-44791 — 1

H-2-44791 — 1

FIGURE 11

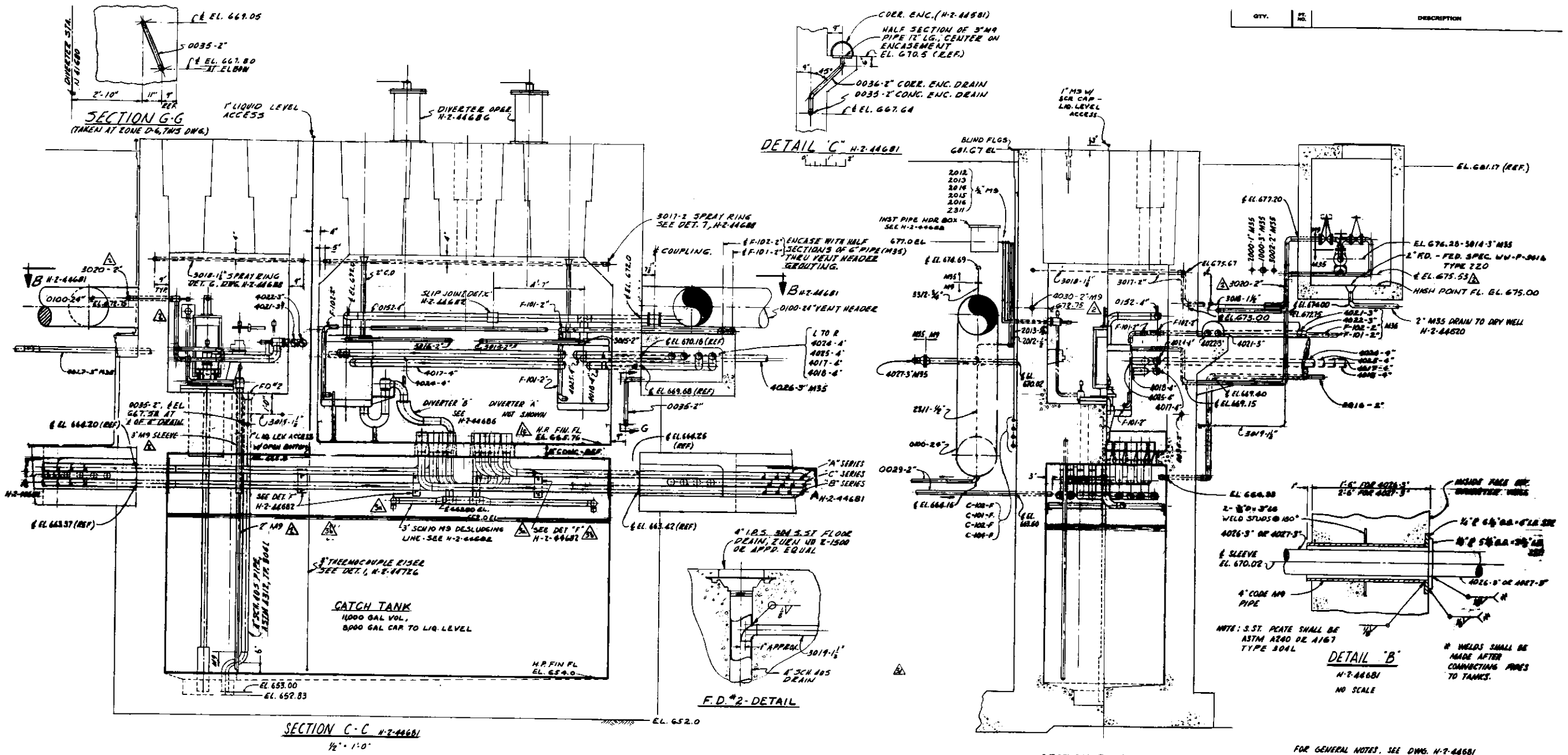

NO.	DESCRIPTION	REV. BY DATE	APP'D BY	FOR	DATE
	REVISIONS				
3	D-4, E8 ① REMOVED FLOOR DRAIN NO1 ② ADDED PIPE SLEEVES D-4 ③ REMOVED SLIP JOINTS D3, D5 ④ ADDED PIPE SUPPORTS D-4, D-5	MJK 9-9-63			
2	ADDED 3020-2" SECT. E-E ZONE G-8 ZONE C-11, 2" LINE ZONE C-10 LINE 3020-2" AT VALVE NO 1 C-2 & F-B. VALVE, ELEV'S. AND C-2 & D-2, LINE 3020-2" ZONE C ADDED JUMPER & DIP LEG ZONE	J.E.D. 7-31-63			
1	REVISED ALL'N. IN ZONE G-F, G-8, 11-8, 11-C	R.H.M. 8-27-63			

NO.	DWG. NO.	DRAWING TITLE
12	H-2-44726	DIRECT BURIED PIPING, MISC DET
11	H-2-44584	PUMP DET - STR. DIV. STN.
10	H-2-44688	DIVERTER DET
9	H-2-44686	DIVERTER ASSY & DET
8	H-2-44688	DIVERTER STA. PIPING DET
7	H-2-44681	DIVERTER STA. PIPING & EQUIP. PLAN
6	H-2-44635	PROCESS WASTE - SBC & DET
5	H-2-44620	DIRECT BURIED PIPING PLAN ETC
4	H-2-44611	ENER. FLOW DIAGRAM
3	H-2-31750	PIPING CODES
2	H-2-44550	DWG. INDEX
1	HW5-8237	CONST. SPECS

REFERENCE DRAWINGS

NEXT USED ON H-2-44681

QTY.	PT. NO.	DESCRIPTION

H2-44683 1/1 3

FIGURE 12

BOVAY ENGINEERS, INC.
SPOKANE HOUSTON BATON ROUGE
RICHLAND BYZILE BIRD TIT.

U. S. ATOMIC ENERGY COMMISSION
HANFORD ATOMIC PRODUCTS OPERATION
GENERAL ELECTRIC

SCALE AS SHOWN

APPROVED FOR CONST.
APPROVED FOR PURCHASE
APPROVED FOR DESIGN

CAC-945 W30219

NONE

241-AX-152 DIVERTER STA. PIPING & EQUIPMENT ARRANGEMENT-SECTIONS PUREX 241-AX TANK FARM

BLDG. 241-AX-152 SYSTEM 0403 & 8904

H-2-44683

QTY.	PT. DEL.	DESCRIPTION

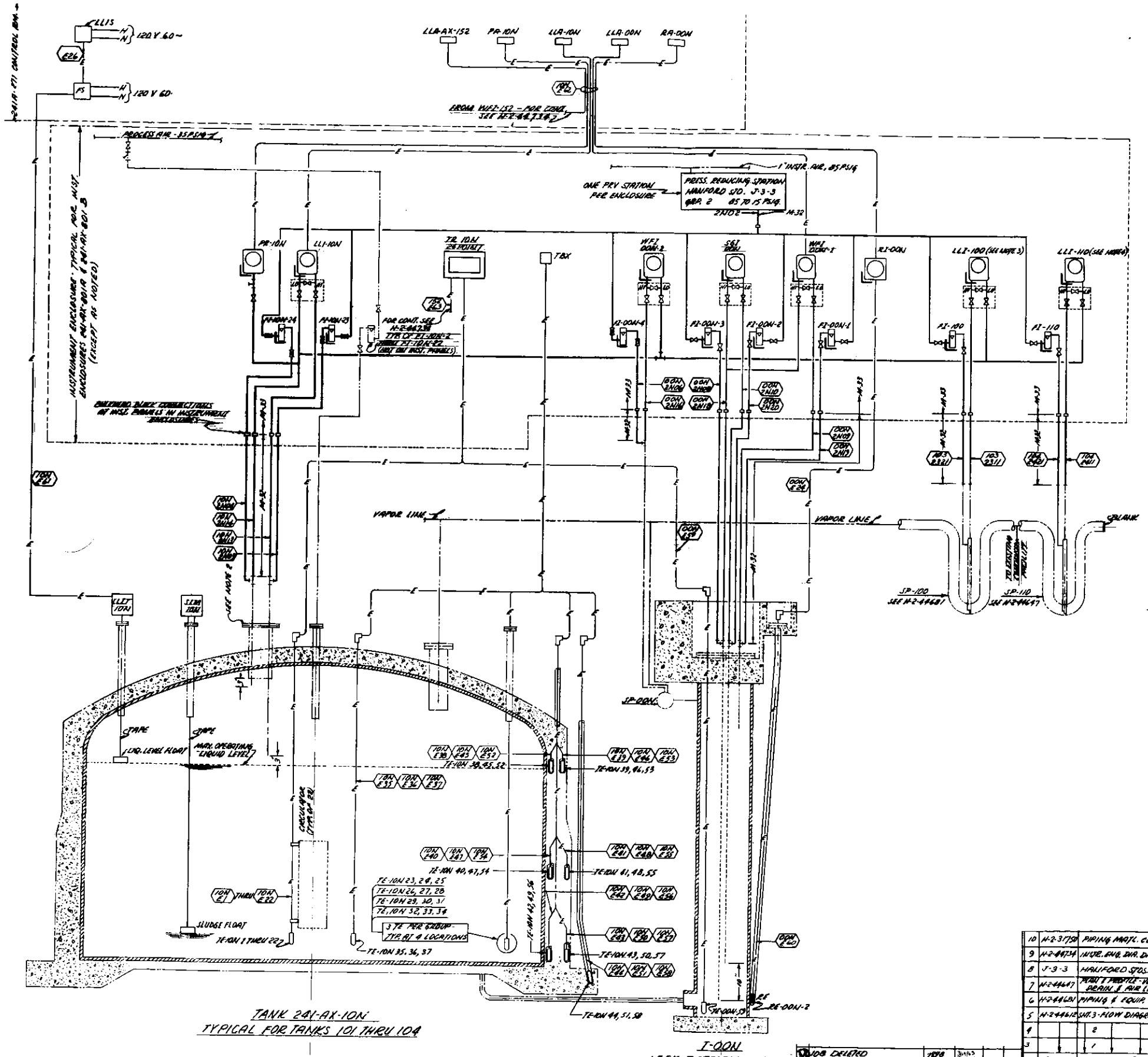

TANK 241-AX-10N
TYPICAL FOR TANKS 101 THRU 104

I-00N
LEAK DETECTION RISER
TYPICAL FOR RISERS
001 THRU 004

LEGEND

CAS	AIR SUPPLY
E	ELECTRICAL LINE
FI	FLOW INDICATOR
FS	FIELD SELECTOR
HI	HI PRESSURE LEG
LLA	LIQUID LEVEL ALARM
LLI	LIQUID LEVEL INDICATOR
LLIS	LIQUID LEVEL INDICATOR CONSOLE
LLIT	LIQUID LEVEL INDICATOR TRANSMITTER
LO	LOW PRESSURE LEG
M	MOTOR
M-32 OR M-33	(INDICATE PIPE CODE - SEE REF. "B")
P	PUMP
PA	PRESSURE ALARM
PBX	PULL BOX
PR	PRESSURE RECORDER
RA	RADIATION ALARM
RE	RADIATION ELEMENT
RI	RADIATION INDICATOR
SGI	SPECIFIC GRAVITY INDICATOR
SLM	SLUDGE METER
SP	SEAL POT
TBX	TERMINAL BOX
TE	TEMPERATURE ELEMENT
TR	TEMPERATURE RECORDER
WF1	WEIGHT FACTOR INDICATOR
H	HOT LEG (ELECTRICAL)
N	NEUTRAL (ELECTRICAL)
	GATE VALVE
	GLOBE VALVE
	TUBING OR WIRE RUN NO. (SEE EXAMPLES BELOW)
00N / 2N10	RISER NO. (SEE NOTE 2) / TUBING RUN NO. (SEE NOTE 2)
FI-3 / 232	TANK NO. (SPECIFIC TANK) / TUBING RUN NO. (SPECIFIC RUN NO.)
23	TANK OR RISER NO. IF REQUIRED.
23	RUN NO.

INDICATES PANEL MOUNTED INSTRUMENT WITH RELATED VALVES, TUBING, ETC.

1:1077 LINES & EQUIPMENT SHOWN BY THIS SYMBOL (AND NOT IDENTIFYING SYMBOL) MUST BE ADDED TO ESTABLISH RELATIONSHIP ONLY.

NOTES:

1. THE LETTER 'N' IN EQUIPMENT & LINE NOS. REPRESENT THE LAST DIGIT OF THE TANK OR LEAK DETECTION RISER NUMBER.
2. CONNECT UNDERGROUND IN DUST TIGHT BOX.
3. LLI-100 & FI-100 ARE IN INST. ENCLOSURE 241-AX-101 A.
4. LLI-110 & FI-110 ARE IN INST. ENCLOSURE 241-AX-101 B

FIGURE 13

H-2-44735 | 1

10	H-2-37759	PIPING MATL. CODA	
9	H-2-44734	INSTR. ENG. DIV. DIVERT. FOR STA.	
8	J-3-3	HANFORD STDS. - INSTR.	
7	H-2-44647	PLAN & PROFILE - VENT HEADER DRAIN & AIR LINES	
6	H-2-44601	PIPING & EQUIP. REPAT.	
5	H-2-44612	SHT. 3 - FLOW DIAGRAM 241-AX TK. MN.	
4		2	
3		1	
2	H-2-44550	DRAWING INDEX	
1	W105-8237	CONSTRUCTION SPECS.	
REF. NO.	DWG. NO.	DRAWING TITLE	

REFERENCE DRAWINGS

NEXT USED ON

NO.	DESCRIPTION	REV. BY	DATE	APP'D BY	FOR	DATE
1	JOB DELETED TANKS 103, 105 THRU SUIT REVISED DESIGN OF ENG. DIAGRAM CHANGED TO					

REVISIONS

CHECK PRINT — COMMENT PRINT — DATE 2/8/62 — SCALE NONE

APPROVED FOR CONST. — APPROVED FOR PURCHASE — APPROVED FOR DESIGN

CA C-245 — 7818 — CLASSIFICATION NONE

U. S. ATOMIC ENERGY COMMISSION
HANFORD ATOMIC PRODUCTS OPERATION
GENERAL ELECTRIC

INSTRUMENTATION
ENGINEERING DIAGRAM
STORAGE TANKS
241-AX TANK FARM

BLDG. NO. 241-AX — DWG. NO. 7002 — SHT. NO. H-2-44735

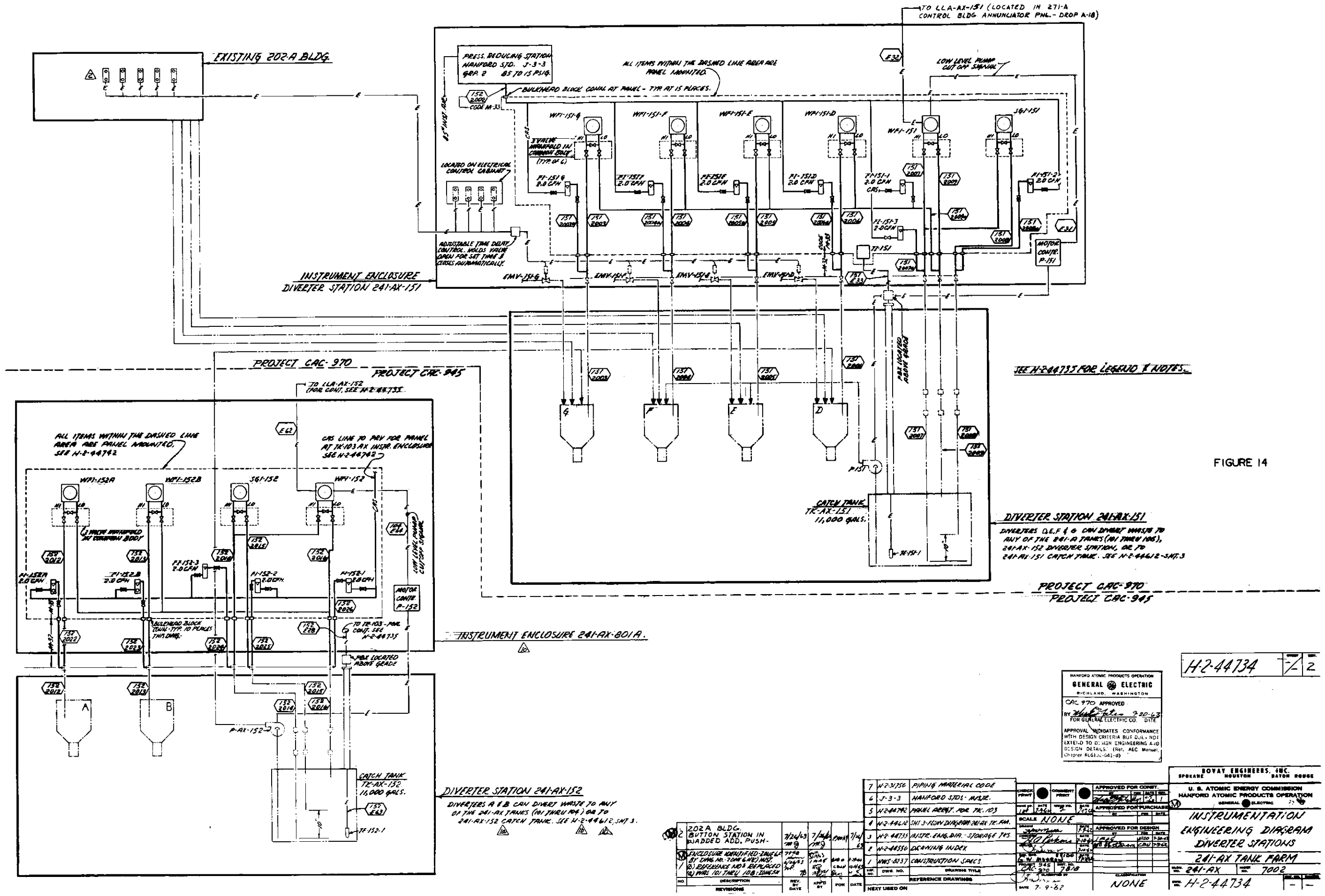

FIGURE 14

H-2-44734 | 2

MANFORD ATOMIC PRODUCTS OPERATION
GENERAL ELECTRIC
RICHLAND, WASHINGTON
CAC 970 APPROVED
BY 9-20-63
FOR GENERAL ELECTRIC CO. DATE
APPROVAL INDICATES CONFORMANCE WITH DESIGN CRITERIA BUT DOES NOT EXTEND TO DESIGN ENGINEERING AND DESIGN DETAILS. (Ref. AEC Manual, Chapter 4L61JJ-041-d)

7	H-2-31756	PIPING MATERIAL CODE			
6	J-3-3-3	HANFORD STDS. MASTER.			
5	H-2-44792	PANEL ARRGT. FOR TK-103			
4	H-2-44612	SHT 3-FLOW DIAGRAM 241-AX-TK-FM.			
3	H-2-44735	INSTR. ENG. DIA. - STORAGE TKS			
2	H-2-44556	LOCATING INDEX			
1	WNS-8237	CONSTRUCTION SPECS.			
REF. NO.	DWG. NO.	DRAWING TITLE			
NEXT USED ON		REFERENCE DRAWINGS			

NO.	DESCRIPTION	REV. BY DATE	APPD BY	FOR	DATE
2	202A BLDG. BUTTON STATION IN ADDED ADD. PUSH-	7/24/63	7/24/63	CMW	7/24
1	ENCLOSURE IDENTIFIED ZONE & BY DWG. NO. ZONE & REF. INST. (B) REFERENCE NO'S REPLACED (C) PANEL 101 TABLE 102 & ZONE 5A	7/18 / 6/24/63 / 7/18	CMW / CMW / CMW	CMW / CMW / CMW	7/24 / 6/24 / 7/18

CHECK PRINT — DOCUMENT PRINT — SCALE NONE
DRAWN — CHECKED — APPROVED — DATE 7-9-62
APPROVED FOR CONST. — APPROVED FOR PURCHASE — APPROVED FOR DESIGN
CLASSIFICATION NONE

BOVAY ENGINEERS, INC.
SPOKANE HOUSTON BATON ROUGE
U. S. ATOMIC ENERGY COMMISSION
HANFORD ATOMIC PRODUCTS OPERATION
GENERAL ELECTRIC

INSTRUMENTATION ENGINEERING DIAGRAM
DIVERTER STATIONS
241-AX TANK FARM

SYSTEM NO. 241-AX — ORDER NO. 7002
DWG. NO. H-2-44734

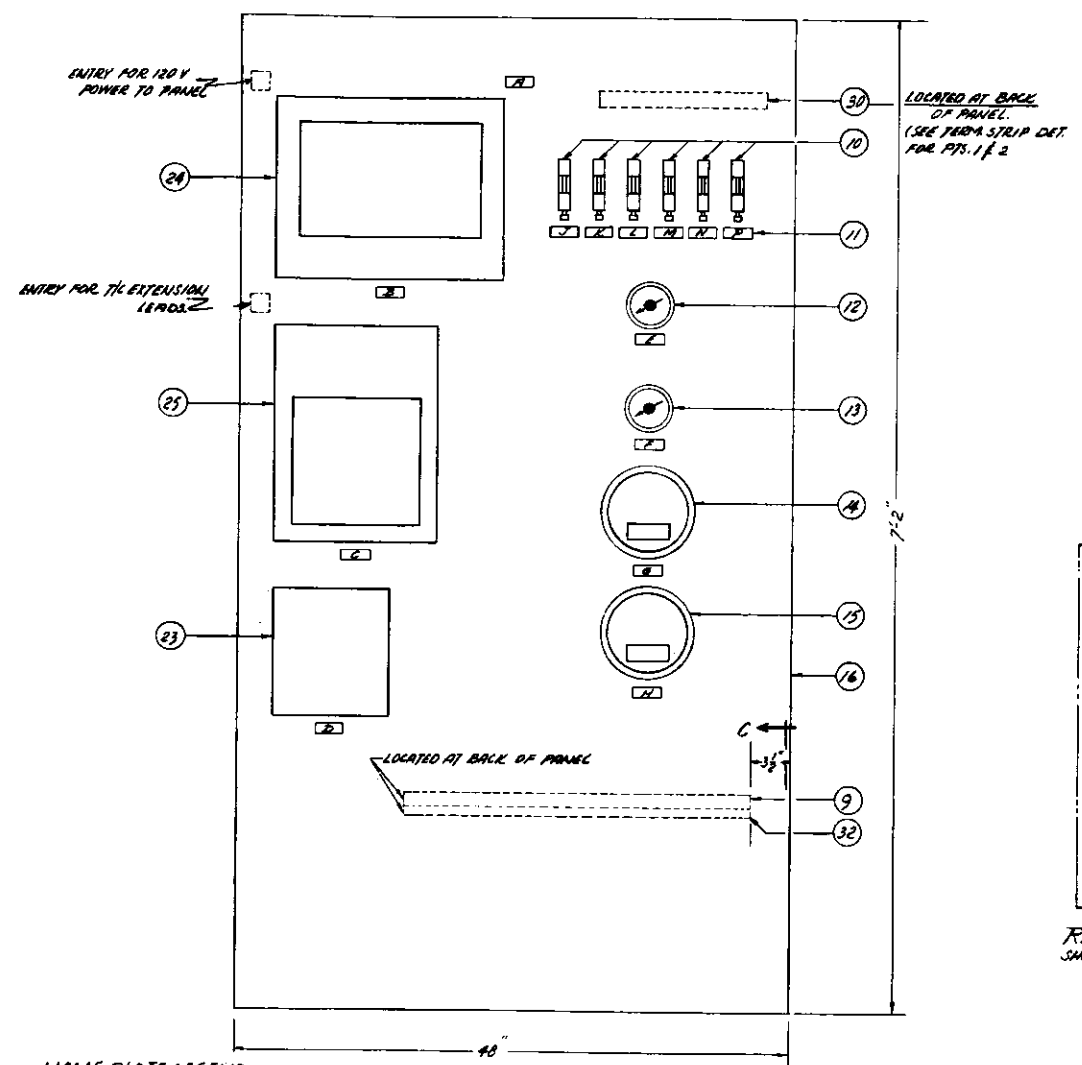

(1) (2)

NAME PLATE LEGEND
(SEE NOTE 1)

A	TR-10N
B	TR-10N
C	PR-10N
D	RI-00N
E	SGI-00N
F	WFI-00N-2
G	WFI-00N-1
H	LLI-10N
J	FI-00N-1
K	FI-00N-2
L	FI-00N-3
M	FI-10N-8
N	FI-10N-7
P	FI-00N-4

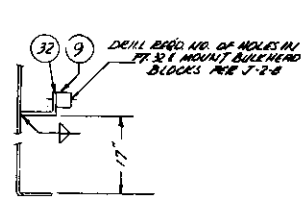

SECTION C-C

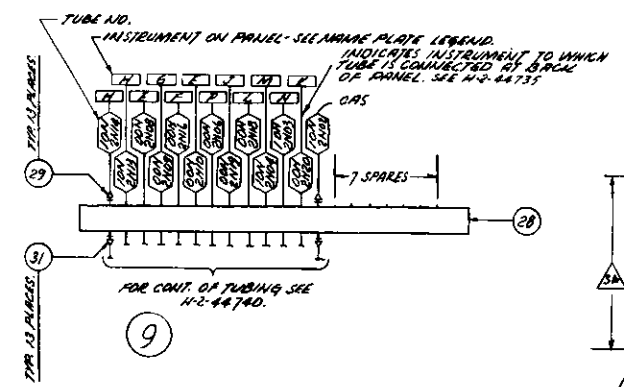

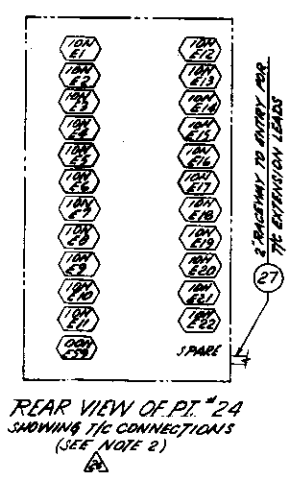

REAR VIEW OF PT. #24
SHOWING T/C CONNECTIONS
(SEE NOTE 2)

CONTACT LEGEND					
INST. NO.	A	B	C	D	WIRE RUN NO.
PR-101	SI-10				
WFI-001-1		SI-11			E62
LLI-101			SI-12		
RI-001				SI-13	
PR-102	SI-14				
WFI-002-1		SI-15			E62
LLI-102			SI-16		
RI-002				SI-17	

CONTACTS SHOWN BELOW ARE INCLUDED IN INSTRUMENTS. PT. NOS CORRESPOND TO THOSE ON PANEL ASSYS. 1 & 2. SEE NOTE 3

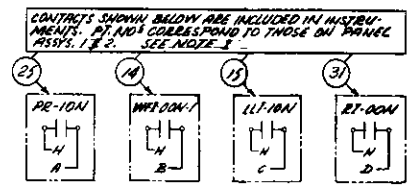

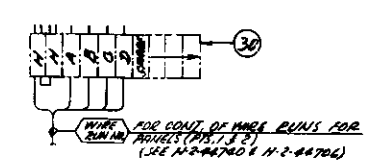

TERMINAL STRIP DETAIL FOR PTS. 1 & 2
FOR CONTACT NOS TO BE USED AT A, B, C & D
SEE CONTACT LEGEND.

NOTES:

1. THE LETTER "N" IN EQUIPMENT & LINE NOS REPRESENTS THE LAST DIGIT OF THE TANK OR LEAK DETECTION RISER.
2. T/C LEADS ARE IDENTIFIED AS FOLLOWS.
   (+) LEAD IS IRON (WHITE INSULATION)
   (−) LEAD IS CONSTANTAN (RED INSULATION)

	QTY.		PT. NO.	DESCRIPTION	
		X	1	PANEL ASSEMBLY - TK. 101	
	X		2	102	
			3	103	
			4	104	
			5	105	
			6	106	
			7	107	
			8	108	
			9	BULKHEAD BLOCK ASSY.	
	AR	AR	10	FLOW INDICATOR - PURGE AIR.	NHS-8237
	AR	AR	11	NAME PLATES - TYPE "G"	HANFORD STD. J-2-7
	AR	AR	12	SPECIFIC GRAVITY INDICATOR	NHS-8237
	AR	AR	13	WEIGHT FACTOR INDICATOR	
	AR	AR	14	WEIGHT FACTOR INDICATOR, W/CONTACTS.	
	AR	AR	15	LIQUID LEVEL INDICATOR, W/CONTACTS.	
	AR	AR	16	PANEL - TYPE X -	HANFORD STD. J-2-1 & J-2-2
			17	[illegible]	[illegible]
			18	[illegible]	SEE NOTE 4
			19	[illegible]	[illegible]
			20	[illegible]	[illegible]
			21	[illegible]	[illegible]
			22	[illegible]	[illegible]
	AR	AR	23	RADIATION INDICATOR, W/CONTACTS.	NHS-8237
	AR	AR	24	TEMPERATURE RECORDER, 24 PT.	
	AR	AR	25	PRESSURE RECORDER, W/CONTACTS	
	AR	AR	26	MISC. PIPING, TUBING, FITTINGS, VALVES, ETC.	NHS-7200-S
	AR	AR	27	MISC. WIRE, CONDUIT, RACEWAY & ELECTRICAL FITTINGS.	
AR			28	BULKHEAD BLOCK - 20 PORT	HANFORD STD J-2-8
AR			29	MALE CONNECTOR TUBING FTG. ¼ ODT X ¼ NPT.	NHS-7200-S
	AR	AR	30	TERMINAL BLOCK, 2 TIER (5 PTS) SPRING LOADED SOCKETS.	[illegible]
AR			31	MALE CONNECTOR - TUBING FTG. - COMPRESSION TYPE W/FERRULE SUPPORT SLEEVE. ¼ ODT X ¼ NPT	NHS-7200-S
	AR	AR	32	3"X2"X¼" L, C.S./L	ASTM-A37

NO.	DESCRIPTION	REV. BY DATE	APPD BY	FOR	DATE
3	(T&E-23 DELETED FROM SUPP. BRACE CALCULATION CLARIFIED. (2) HANFORD INST. 1/2 PER CH INST.	7838 [illegible]	[illegible]	[illegible]	[illegible]
2	(a) WAS LL1-00N-2. ZONE 1 & TO B & PRINTS. ZONE C-4 VIEW OF PT. 28 EXPANDED VERT. ZONE RIC. (3) REMOVED (4) TIER BLOCK (PTS. 37 TO 39) WAS SHUNTING TO TKS. #3 THRU 10B (5) DELETED ALL ITEMS PER:	7838 [illegible] 5/7/62 [illegible]	[illegible]	[illegible]	[illegible]
1	(1) ADDED - ZONE 3D C-C ADDED - ZONE 3H (2) PT. ADDED - ZONE 3B (3) SECTION ADDED - ZONE 4B & D VIEW B-B (4) PANEL - ZONE 3A (5) NOTE LIST. (6) ADDITIONS TO BLOCK PTS. 32, 33 & 34 ADDED TO PTS. 28 ADD PNEUM. CHG. NO. 1 (7) (8) DEL. NOS ON BACK OF DWG.	7818 [illegible] 5/2/62 [illegible]	[illegible]	[illegible]	[illegible]

REVISIONS

15	D-20-115	HANFORD STDS. - ELEC.	
14	D-20-30	HANFORD STDS. - ELEC.	
13	H-2-44704	WIRE RUN LIST.	
11	J-2-8	HANFORD STDS. - INSTR.	
10	H-2-44740	INST. - INST. ENCL. - PANEL CLEAR.	
9	H-2-44705	ARCH. DET. - INSTR. ENCLOSURE	
8	NHS-8000-S	HANFORD STD. SPEC. - ELEC.	
7	J-2-1	HANFORD STD. - INSTR.	
6	J-2-2	HANFORD STD. - INSTR.	
5	NHS-7200-S	HANFORD STD. SPEC. - INSTR.	
4	H-2-44735	INSTR. FUN. DIA. - SUPPLY TKS	
3	J-2-7	HANFORD STDS. - INSTR.	
2	H-2-44730	DRAWING INDEX	
1	NHS-8237	CONSTRUCTION SPECS.	
REV. NO.	DWG. NO.	DRAWING TITLE	

REFERENCE DRAWINGS
NEXT USED ON H-2-44740 & H-2-44705.

CHECK PRINT — COMMENT PRINT — DATE 7-16-62
SCALE NONE
DATE 7-16-62
DATE 7-16-62
DATE 7-16-62
DATE 7-16-62
DATE 7-16-62
DATE 7-16-62
DWG. NO. H-2-44740 & H-2-44705
CHG. NO. 7818
DESIGNED BY
DATE 7-16-62

APPROVED FOR CONST. — DATE 7-16-62
APPROVED FOR PURCHASE — DATE
APPROVED FOR DESIGN — DATE 7-16-62
CLASSIFICATION NONE

U. S. ATOMIC ENERGY COMMISSION
HANFORD ATOMIC PRODUCTS OPERATION
GENERAL ELECTRIC

ELECTRICAL - INSTRUMENTATION
PANEL ARRANGEMENT FOR TANKS 101 & 102
241 AX TANK FARM
241 AX — 5902
H-2-44741

H-2-44741 — REV. 3

FIGURE 15

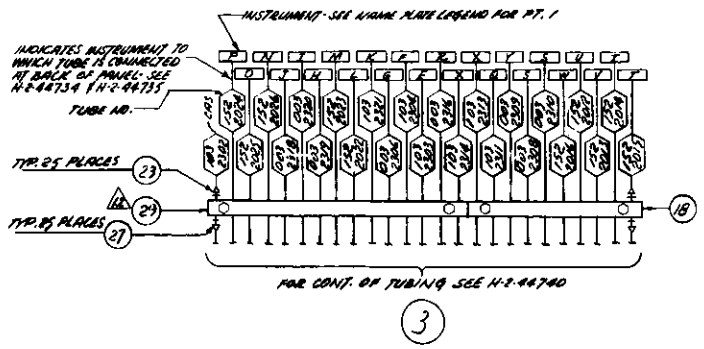

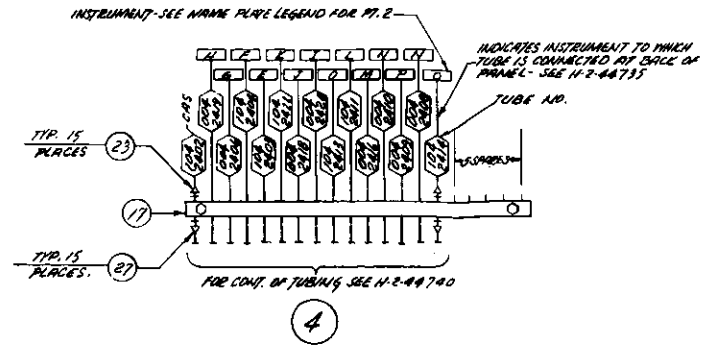

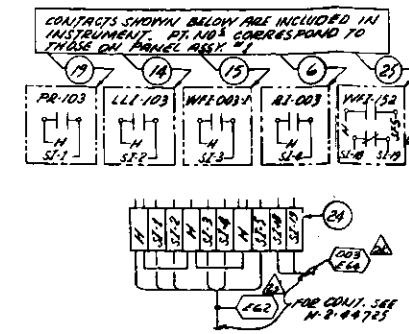

TERMINAL BLOCK DETAIL FOR PT. 1

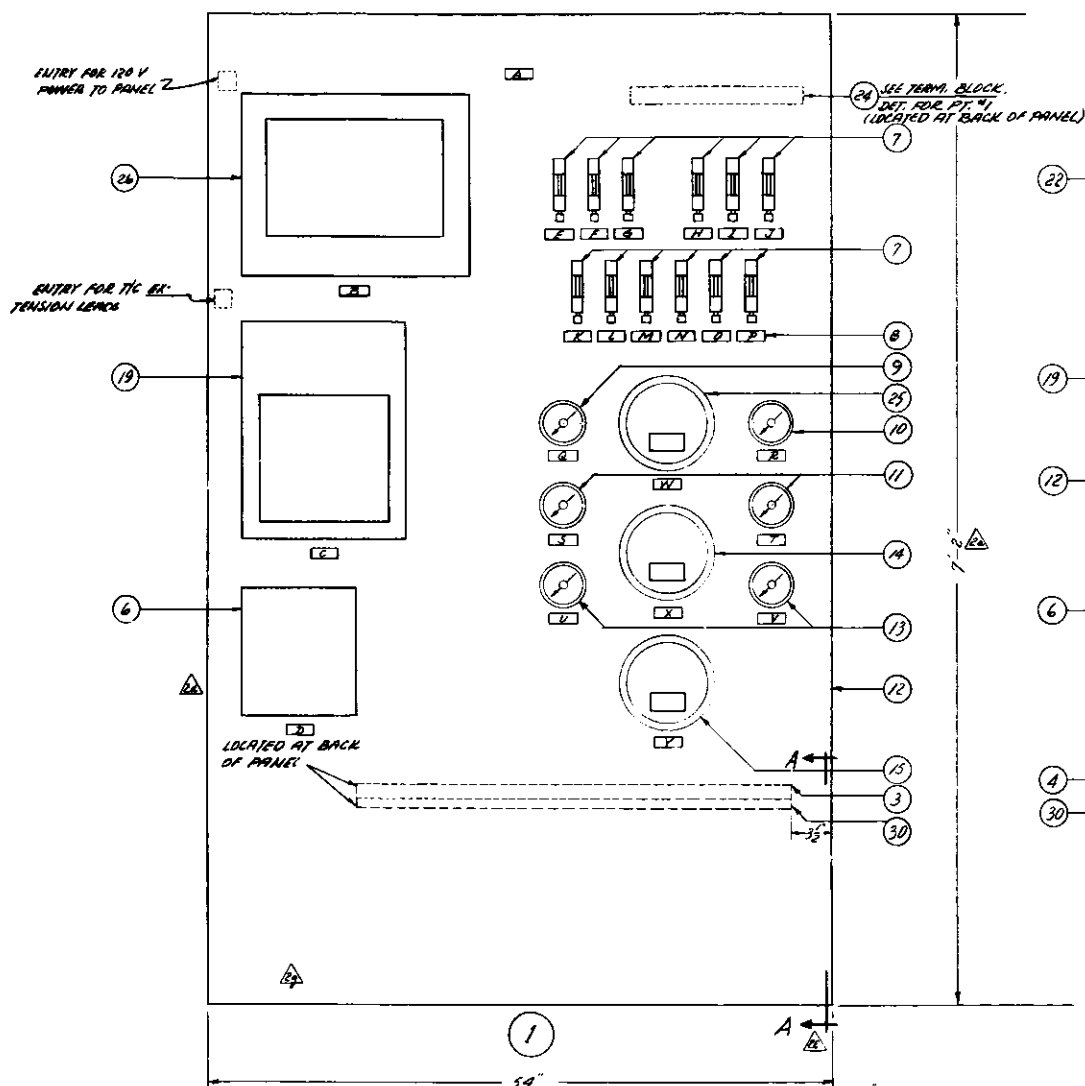

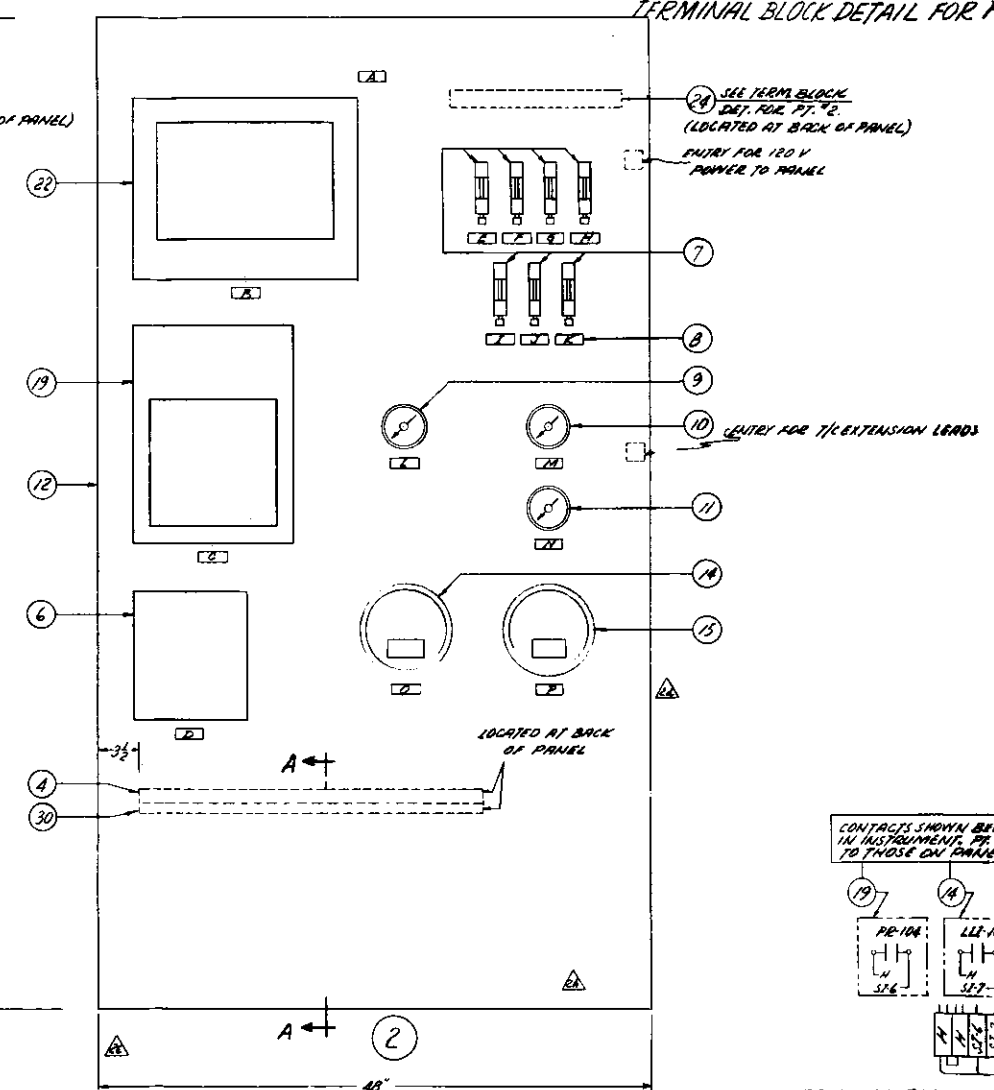

	QTY.				PT. NO.	DESCRIPTION	
				X	1	PANEL ASSEMBLY - TK. 103	
			X		2	TK. 104	
		X		AR	3	BULKHEAD BLOCK ASSY. - PANEL ASSY "1"	
	X			AR	4	- PANEL ASSY "2"	
					5	[illegible]	[illegible]
			AR	AR	6	RADIATION INDICATOR, W/CONTACTS	HWS-8237
			AR	AR	7	FLOW INDICATOR - PURGE AIR	
			AR	AR	8	NAME PLATES - TYPE "C"	HANFORD STD. J-2-7
			AR	AR	9	LIQUID LEVEL INDICATOR	HWS-8237
			AR	AR	10	WEIGHT FACTOR INDICATOR	
			AR	AR	11	SPECIFIC GRAVITY INDICATOR	
			AR	AR	12	PANEL, TYPE "X"	HANFORD STD. J-27 & J-28
				AR	13	WEIGHT FACTOR INDICATOR	HWS-8237
			AR	AR	14	LIQUID LEVEL INDICATOR, W/CONTACTS	
			AR	AR	15	WEIGHT FACTOR INDICATOR, W/CONTACTS	
			AR	AR	16	CASTER ASSEMBLY	H-2-44734 & PT. 7
	AR				17	BULKHEAD BLOCK 20 PORT	HANFORD STD. J-2-8
		AR			18	10 PORT	
			AR	AR	19	PRESSURE RECORDER, W/CONTACTS	HWS 8237
			AR	AR	20	MISC. PIPING, TUBING, FITTINGS, VALVES, ETC.	HWS-7200-S
			AR	AR	21	MISC. WIRE, CONDUIT, RACEWAYS & ELECTRICAL FITTINGS	
			AR	AR	22	TEMPERATURE RECORDER, 24 PT.	HWS-8237
	AR	AR			23	MALE CONNECTOR TUBING FTG. 3/8 ODT X 1/4 NPT	HWS-7200-S
			AR	AR	24	TERMINAL BLOCK, 2 TIER (5 POINTS) SPRING LOADED SOCKETS	BURNDY CORPORATION CAT. NO. RESMA 25 OR APPROVED EQ.
			AR	AR	25	WEIGHT FACTOR INDICATOR, W/CONTACTS	HWS-8237
				AR	26	TEMPERATURE RECORDER, 14 PT.	
	AR	AR			27	MALE CONNECTOR - TUBING FTG. - COMPRESSION TYPE W/TUBE SUPPORT SLEEVE. 3/8 ODT X 1/4 NPT.	HWS-7200-S
			AR	AR	28	[illegible]	[illegible]
				AR	29	BULKHEAD BLOCK, 15 PT.	HANFORD STD. J-2-8
	AR	AR			30	5"X2"X1/4" L, C.S.R.	ASTM-A7
			AR	AR	31	[illegible]	[illegible]

FIGURE 16

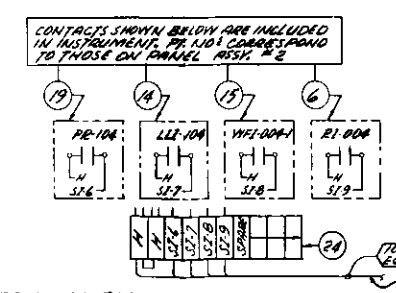

TERMINAL BLOCK DETAIL FOR PT. 2

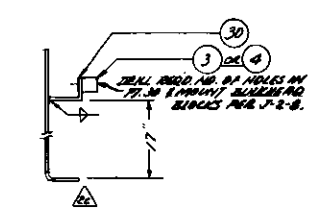

SECTION A-A

H-2-44742 | 2

NAME PLATE LEGEND FOR PT. NO. 1

A	TK. 103 & DIV. STR. 241-AX-152		
B	TR-103	O	FI-152-2
C	PR-103	P	FI-152-3
D	RI-003	Q	LLI-100
E	FI-103-7	R	WFI-003-2
F	FI-103-8	S	SGI-003
G	FI-003-4	T	SGI-152
H	FI-003-1	U	WFI-152A
I	FI-003-2	V	WFI-152B
J	FI-003-3	W	WFI-152
K	FI-100	X	LLI-103
L	FI-152A	Y	WFI-003-1
M	FI-152B		
N	FI-152-1		

NAME PLATE LEGEND FOR PT. NO. 2

A	TANK 104
B	TR-104
C	PR-104
D	RI-004
E	FI-104-7
F	FI-104-8
G	FI-004-4
H	RI-004-1
I	FI-004-2
J	FI-004-3
K	FI-110
L	LLI-110
M	WFI-004-2
N	SGI-004
O	LLI-104
P	WFI-004-1

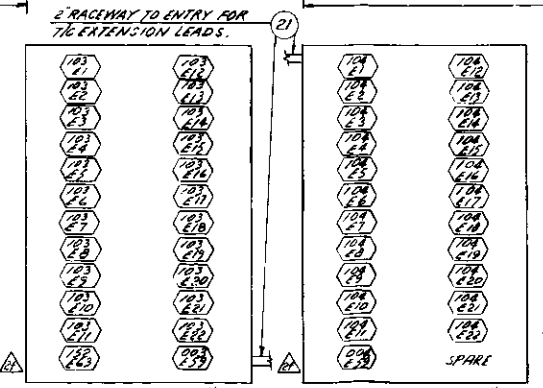

REAR VIEW OF PT. "26" SHOWING T/C CONNECTIONS SEE NOTE 1

REAR VIEW OF PT. "22" SHOWING T/C CONNECTIONS SEE NOTE 1

NO.	DESCRIPTION / REVISIONS	REV. BY	DATE	APP'D BY	FOR	DATE
1	PARTS LIST WAS 12 PT. 103 & 29 - ZONE 10B (C) PT. 29 IN WAS 103 & 27 - ZONE 10B (E) WAS PHASE 2 REMOVED - ZONE 13B, (G) CO. FROM PT. 8 - ZONE 8B (L) ZONES 2B (K) PT. 28 & 31 DELET. PT. 28 & 32 DELETED FROM PT. 2 (L) PARTS 17, 19, 24 & 27 ADDED (G) T/C CONNECTIONS FOR PT. 28 & REMOVED ZONES 4B & 6B (H) E. ZONES (K & P) & 13 CASPERS WAS PT. 4 & 5 DELETED IN PT. 1 & CASTER DELETED. ZONE 13 & (L) FROM PT. 2 (J) & PT. 28 & (G) PT. 5, 28, 31 & 32 DELETED (K) PANELS WERE 72" HIGH ZONE 5B	7898	11-9-63			
2	ZONE 1A PANELS - ZONE 8B (L) WAS PT. 17 2B (K) ADDITIONS TO BACK OF TRANS TO BACK OF PANEL - ZONE A-A ADDED - ZONE 12B (G) ADDITIONS PT. 22 ADDED - ZONE 5B (F) LOCT. (J) PT. 31 ADDED - ZONE 9B; (E) PTS. 28 THRU 32 ADDED TO PTS. 2 CHANGED FROM PT. 17 TO 18 ST. 3 PLACED WITH DWG. NO. (B) QTY. (D) REF. NOS ON BOOT OF DWG. RE-	7818	11/7/62 11/19/61			

NO.	DWG. NO.	DRAWING TITLE
17	D-20-115	HANFORD STDS.-ELEC.
16	D-20-20	HANFORD STDS.-ELEC.
15	J-2-8	HANFORD STD.-INSTR.
14	H-2-44705	ELECT.-INSTR. ENCLOSURE PANEL DET.
13	H-2-44740	INST.-INST. ENCLOSURE-PUMP & FLOW
12	DI-7200-S	INSTRUCTIONS FOR USING HWS 7200-S
11	H-2-44734	PANEL ARRG'T-PTS. 1B & 2
10	H-2-44605	ARCH. DET.-INSTR. ENCLOSURE
9	HWS-8005	HANFORD STD. SPEC.-INSTR.
8	J-2-2	HANFORD STD.-INSTR.
7	J-2-1	
6	HWS-7200-S	HANFORD STD. SPEC.-INSTR.
5	H-2-44731	INSTR. ENG. DIA. - STORAGE TK'S.
4	H-2-44734	INSTR. ENG. DIA. - INTERIZE STA.
3	J-2-7	HANFORD STDS.-INSTR.
2	H-2-44550	DRAWING INDEX
1	HWS-8237	CONSTRUCTION SPECS

REFERENCE DRAWINGS

NEXT USED ON H-2-44740 & H-2-44605

NOTES:

1- T/C LEADS ARE IDENTIFIED AS FOLLOWS:
(+) LEAD IS IRON (WHITE INSULATION)
(-) LEAD IS CONSTANTAN (RED INSULATION)

CHECK PRINT	COMMENT PRINT	APPROVED FOR CONST.	U. S. ATOMIC ENERGY COMMISSION HANFORD ATOMIC PRODUCTS OPERATION GENERAL ELECTRIC
SCALE NONE		APPROVED FOR PURCHASE	ELECTRICAL-INSTRUMENTATION PANEL ARRANGEMENT FOR TANKS 103 & 104
		APPROVED FOR DESIGN	241-AX TANK FARM
CLASSIFICATION NONE			DWG. NO. H-2-44742

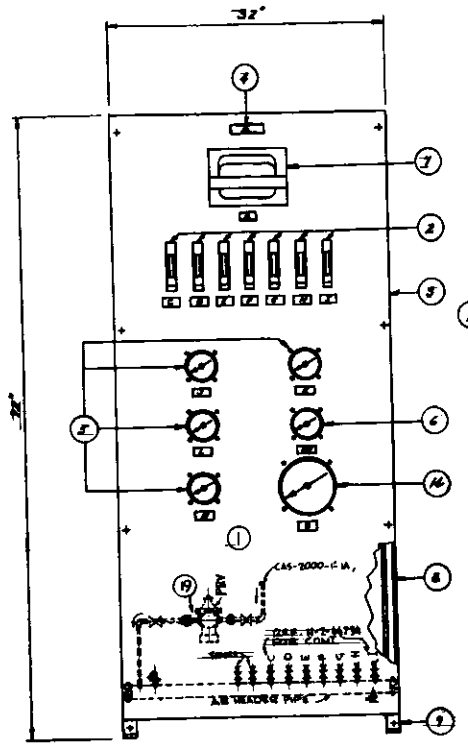

PANEL ASS'Y

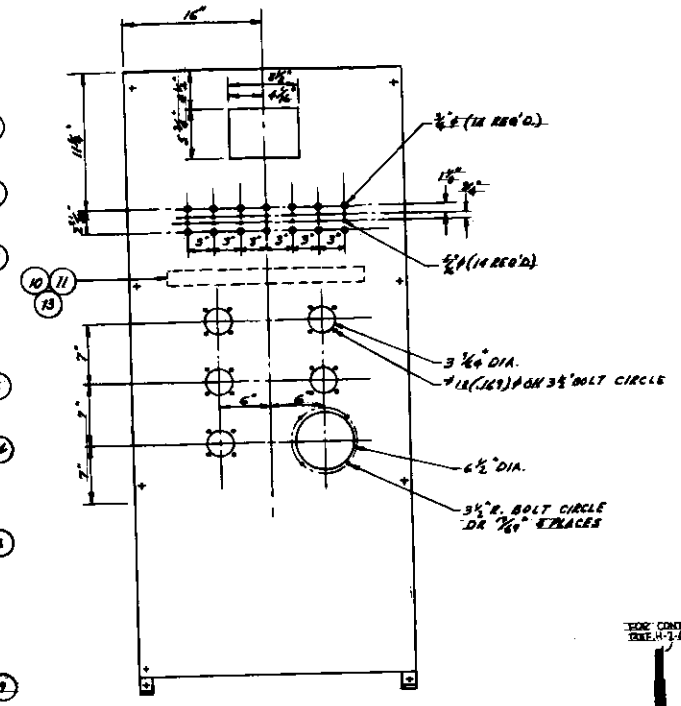

PANEL DRILLING

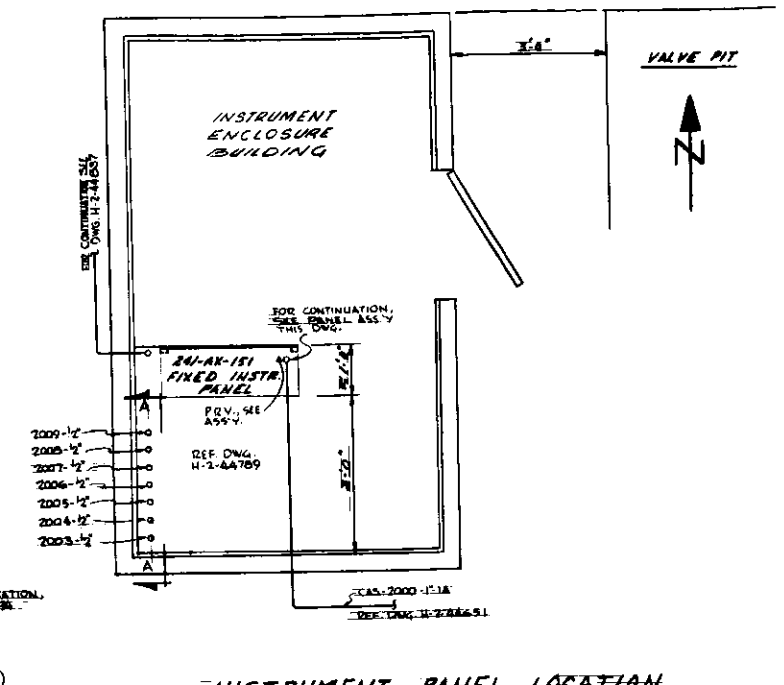

INSTRUMENT PANEL LOCATION

REFERENCE DWG. H-2-44762

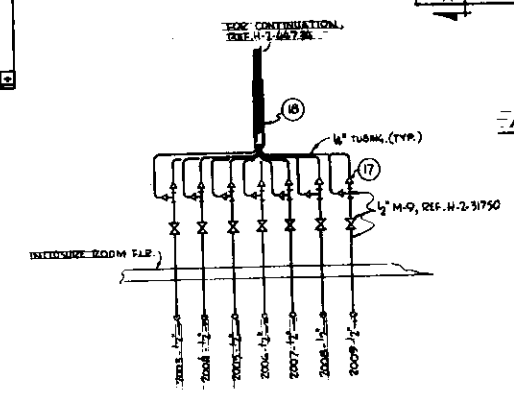

SECTION A-A

NO SCALE

QTY.		ITEM NO.	DESCRIPTION	
	X	1	PANEL ASS'Y - DIVERTER STA.-241-AX-151	J-2-1
	7	2	ROTAMETER, 0.2 TO 2 CFM	HWS-7337
	1	3	#7 GA. C.R. STL. SHEET ASTM A283 GR. C	HANFORD STD. J-2-2
	15	4	NAME PLATES, 3/16" LETTERS TYPE "C"	HANFORD STD. J-2-7
	4	5	WEIGHT FACTOR INDICATOR	HWS-7337
	1	6	SPECIFIC GRAVITY INDICATOR	HWS-7337
	1	7	TEMPERATURE INDICATOR	HWS-7337
	AR	8	STRUCTURAL CHANNEL 1 1/2"x1 1/2"	HANFORD STD. OR APPD. EQUAL
	AR	9	MISC. NUTS, BOLTS & FTGS.	HANFORD STD. OR APPD. EQUAL
	AR	10	3"x2"x1/4" L's	ASTM-A7
	1	11	BULKHEAD BLOCK 15 PT	HANFORD STD. J-2-8
	AR	12	MISC. FITTS., TUBING FITTINGS, VALVE ETC.	HWS-7200-S
	AR	13	MALE CONNECTOR, TUBING FITTING 3/8" O.D.F. x 3/8" N.P.T.	HWS-7200-S
	1	14	WEIGHT FACTOR INDICATOR W/CONTACTS	HWS-7337
	AR	15	MISC. WIRE, CONDUIT, SOCKETS & ELECTRICAL FITTINGS	HWS-7200-S
	AR	16	TERMINAL BLOCK, 2 TIER (6 POINTS) SPRING LOADED SOCKETS	APPROVED EQUAL
	18	17	MALE CONNECTOR, 1/4" HOSE x 1/4" PLASTIC TUBING FITTINGS	M-32 H-2-31750
	AR	18	POLYVINYL CHLORIDE SHEATH - PLASTIC TUBE (18 TUBE BUNDLE)	M-32 H-2-31750
	1	19	PRV STATION - INSTRUMENT BACK HWS-7200-S	PRV-CONDOLIN FK-20, POWER CONNECTOR, 6-7 PRESSURE TRANSMITTER, 15 SCFM, 25 SCFM, OUTPUT GAGE, BRASS, 1/4" FITTINGS, 1/4" SCREWS - SET OF 25 PRV.
	AR	20	MISC. CLAMPS, HANGERS, ETC.	

FIGURE 17

NAME PLATE LEGEND

A-DIVERTER STATION 241-AX-151
B-TI-151 CATCH TANK
C-FI-151-D
D-FI-151-E
E-FI-151-F
F-FI-151-G
G-FI-151-1
H-FI-151-2
I FI-151-3
J-WFI-151-D
K-WFI-151-E
L-WFI-151-F
M-SGI-151 CATCH TANK
N-WFI-151-G
O-WFI-151 CATCH TANK

H-2-44836 | SHEET 1/1 | REV. 0

NO.	DESCRIPTION	REV. BY DATE	APPD BY	FOR	DATE
	REVISIONS				

NO.	DWG. NO.	DRAWING TITLE
14	H-2-44837	INSTRUMENTATION - PRAN-ELEV. DIV. STA.
13	H-2-44789	241-AX-151 DIVERTER STA.
12	H-2-44612	ENG. FLOW DIAGRAM
11	D-20-115	HANFORD STD. ELEC.
10	D-20-20	↓ ↓ ↓
9	J-2-2	HANFORD STD. INSTR.
8	J-2-7	↓ ↓ ↓
7	J-2-8	↓ ↓ ↓
6	H-2-44739	INST. ENG. DIA. DIVERTER STA.
5	H-2-44762	INST.-INST. ENCLOSURE PLAN & ELEV.
4	J-2-1	HANFORD STD. INSTR.
3	HWS-7200-S	HANFORD STD. SPEC. INSTR.
2	HWS-7337	CONSTRUCTION SPECS.
1	H-2-44750	DRAWING INDEX

REFERENCE DRAWINGS

NEXT USED ON

HANFORD ATOMIC PRODUCTS OPERATION
GENERAL ELECTRIC
RICHLAND, WASHINGTON

CAC-970 APPROVED
BY [signature] 9-20-63
FOR GENERAL ELECTRIC CO. DATE

APPROVAL INDICATES CONFORMANCE WITH DESIGN CRITERIA BUT DOES NOT EXTEND TO DESIGN ENGINEERING AND DESIGN DETAILS. (Ref. AEC Manual, Chap. PL6102-1(4.1.c))

CHECK PRINT | COMMENT PRINT

SCALE AS SHOWN

DRAWN R. Taylor 9/7/62
CHECKED [signature] 9/7/62
APPROVED [signature] 9/7/62
PROJECT ENGINEER [signature] 9/7/62
PROJECT CAC 970 WO-40308
PLANNING ENGINEER [signature] DATE 9-20-63

APPROVED FOR CONST. BY | FOR | DATE | SEC.
APPROVED FOR PURCHASE BY | FOR | DATE
APPROVED FOR DESIGN BY | FOR | DATE

CLASSIFICATION NONE

BOVAY ENGINEERS, INC.
SPOKANE HOUSTON BATON ROUGE

U. S. ATOMIC ENERGY COMMISSION
HANFORD ATOMIC PRODUCTS OPERATION
GENERAL ELECTRIC

INSTRUMENTATION
PANEL ARRANGEMENT FOR
DIVERTER 241-AX-151

PUREX WASTE ROUTING

BLDG. NO. 241-AX-151 | PROJ. NO. 5902-32

DWG. NO. H-2-44836 | SHT. NO. - | REV. -

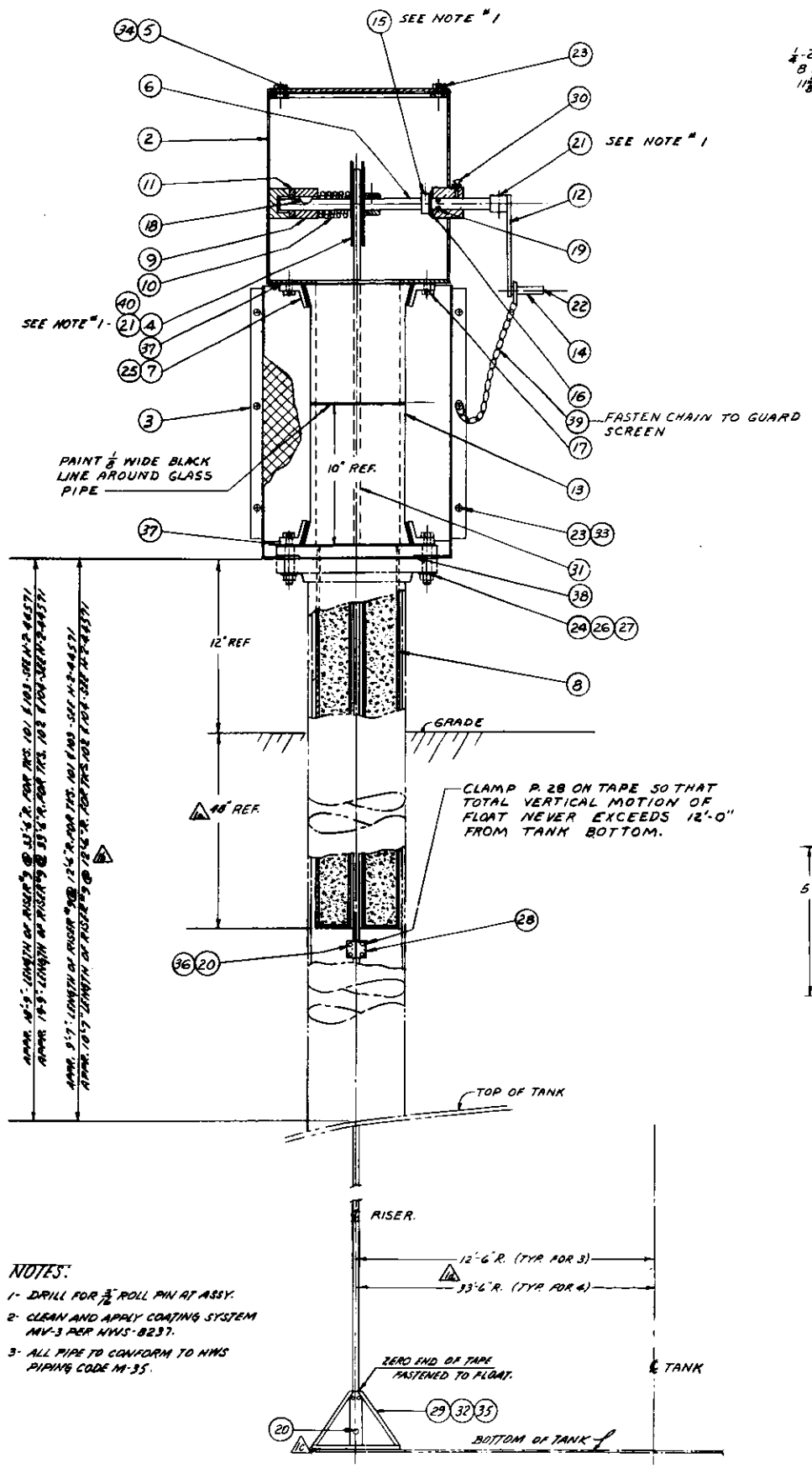

1 ARRANGEMENT

NOTES:

1- DRILL FOR 3/16" ROLL PIN AT ASSY.

2- CLEAN AND APPLY COATING SYSTEM MV-3 PER WWS-8237.

3- ALL PIPE TO CONFORM TO NWS PIPING CODE M-35.

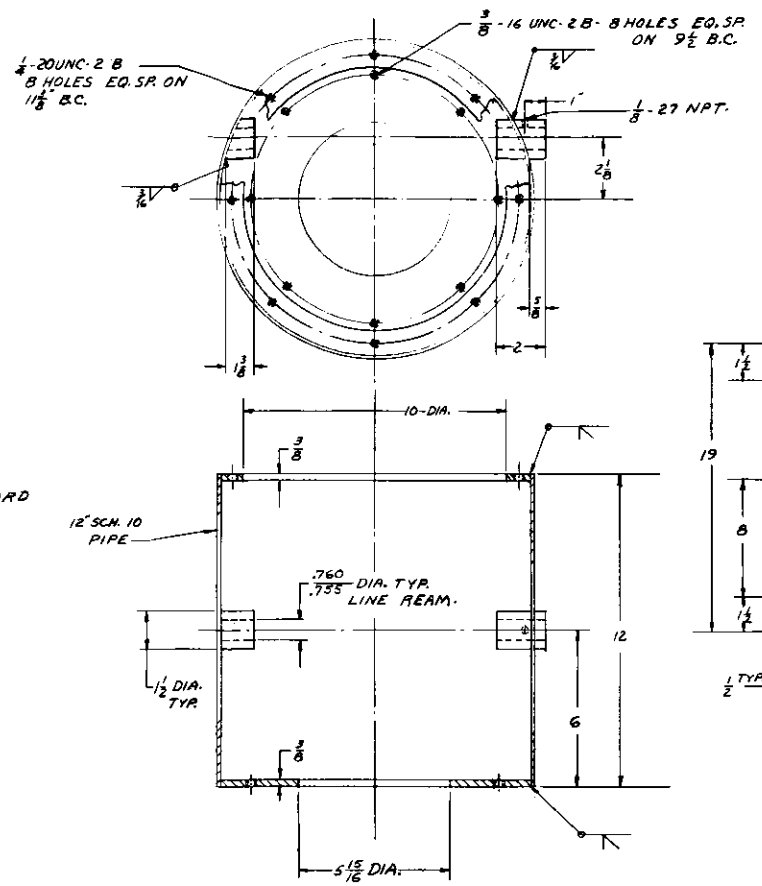

2 REEL BOX
MATL. STL. ASTM A 107-61T

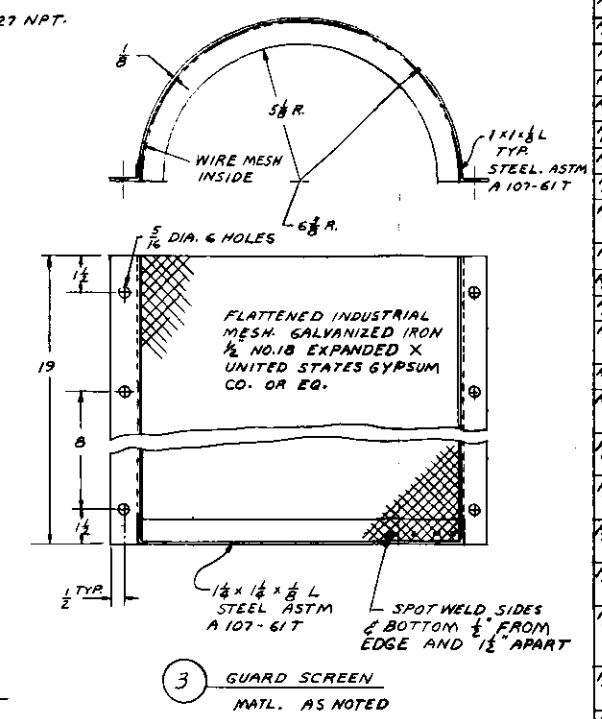

3 GUARD SCREEN
MATL. AS NOTED

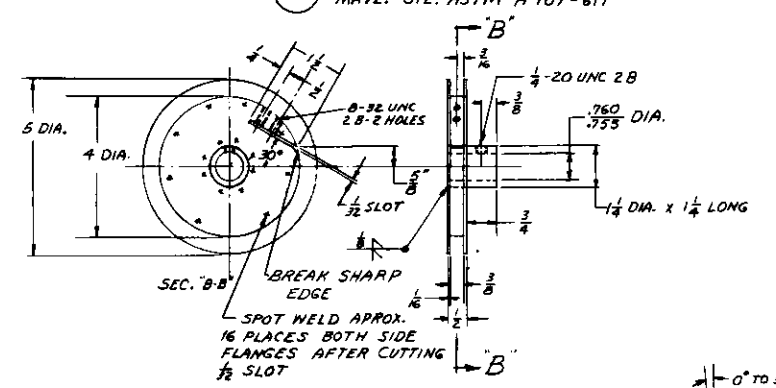

4 REEL
MATL. STL. ASTM A 107-61T

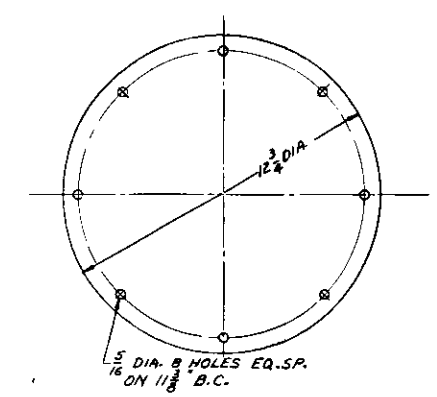

5 REEL BOX COVER
MATL. 1/8 THK. STL. ASTM A 107-61T

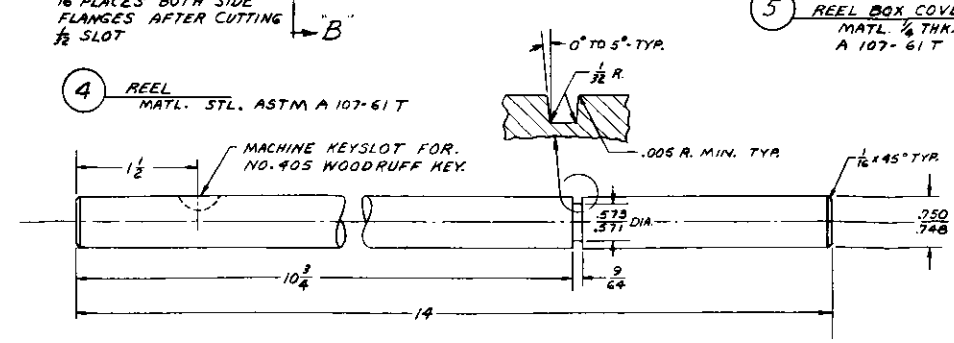

6 SHAFT
MATL. BRASS.
ASTM B16-60

QTY.		ITEM NO.	DESCRIPTION	
	X	1	ARRANGEMENT	
	N/A	2	REEL BOX	
	N/A	3	GUARD SCREEN	
	N/A	4	REEL	
	N/A	5	REEL BOX COVER	
	N/A	6	SHAFT	
	N/A	7	FLANGE 6" STD.	CORNING GLASS WORKS
	N/A	8	SHIELDING PLUG	H-2-44746 P.1
	N/A	9	BRAKE	H-2-44746 P.2
	N/A	10	SPRING	H-2-44746 P.8
	N/A	11	BRAKE LINING 3/4 I.D. x 1 1/2 O.D. x 1/4 THK. STYLE NO.350	JOHN MANVILLE OR. EQ.
	N/A	12	CRANK LEVER	H-2-44746 P.3
	N/A	13	PYREX GLASS 6" DIA. x 18" LONG	CORNING GLASS WORKS
	N/A	14	CRANK HANDLE	H-2-44746 - P.4
	N/A	15	COLLAR W/ SET SCREW- 3/4 I.D. 1 1/4 OD. x 3/16 THK.	STL. EQ. TO BOSTON GEAR CAT." SC75
	N/A	16	THRUST WASH. 3/4 I.D. x 1 3/8 O.D. x 1/8 THK.	BOST. GEAR R629 OR.EQ
	N/A	17	SCREW-HEX. HD. 5/8-16-UNC 2A x 1 1/4" LONG	STL. ASTM-A 331-61T
	N/A	18	KEY-WOODRUFF "405	STL. ASTM-A 331-61T
	N/A	19	"O"-RING-AN 6227-11	NEOPRENE
	N/A	20	SCREW- HEX. HD. 1/4-20 UNC 2A x 5/8 LONG.	SST. ANY 300 SER.
	N/A	21	SCREW - SOC. SET. 1/4-20 UNC - 3A x 1/4 LONG.	STL. ASTM A 331-61T
	N/A	22	SHOULDER SCREW - 5/16-18 UNC-2A x 5/8 LONG. W/ 3/8 DIA. x 4" LONG SHOULDER	STL.
	N/A	23	SCREW- HEX. HD. 1/4-20 UNC 2A x 5/8 LONG	STL.
	N/A	24	SCREW- HEX. HD 5/8-16-UNC 2A x 3 1/2 LONG	STL.
	N/A	25	GASKET- ASBESTOS FOR 6" SIZE GLASS PIPE	CORNING GLASS WORKS
	N/A	26	NUT- HEX. 5/8-16 UNC-2B	STL
	N/A	27	WASHER- FLAT 5/8 STD.	STL
	N/A	28	STOP CLAMP.	H-2-44746- P.7
	N/A	29	FLOAT	H-2-44746 P.5
	N/A	30	GREASE FITTING- 1/8 N.P.T.	STL.
	N/A	31	STEEL TAPE- 5/16 WIDE. x 100' LONG- HEAVY LINE GRADUATED IN FEET, INCHES & 1/8 INCHES.	SST. EQ. TO MAINE WYTE FACE 7A R NW 7172B KEUFFEL & ESSER
	N/A	32	SCREW- RND. HD. 8-32 UNC 2A x 3/8 LONG	SST ANY 300 SER.
	N/A	33	NUT HEX. 1/4-20 UNC-2B	STL.
	N/A	34	GASKET 10" I.D. x 12 3/4 O.D. x 1/16 THK- 8-3/8 DIA. HOLES TO MATCH P.5	NEOPRENE
	N/A	35	TAPE CLAMP.	H-2-44746- P.6
	N/A	36	NUT- HEX. 1/4-20 UNC- 2B	SST.
	N/A	37	GASKET 1/16 T. TO MATCH P.7	NEOPRENE
	N/A	38	GASKET 6" I.D. x 8 1/2 O.D. x 1/16 T.	ASPESTOS
	N/A	39	#40 AM. SASH CHAIN W/ 1" DIA END RING	AM. CHAIN CO. OR EQ.
	N/A	40	SCREW SOC. SET. 8-32 UNC 2A x LENGTH TO SUIT	STL.

H-2-44745 -/- REV. 1

UNLESS OTHERWISE SPECIFIED
DIMENSIONS ARE IN INCHES
TOLERANCES ON
FRACTIONS ± 1/32 DECIMALS ± .005 ANGLES ± 1/2°
SURFACE ROUGHNESS IN ACCORDANCE WITH ASA B46.1-1955

FIGURE 18

NO.	DESCRIPTION	REV. BY DATE	APPD BY	FOR	DATE
1	CAE INSTRUMENTATION DWG SIZE SURCE REVISED TO INCORP. ADDED IN REF. COLUMN (C) ZONE 6A, (F) REFERENCES TRANS. (B) MOVES RELOCATED DIMENSION FROM ℄ OF TAIL-ZONE 2H, (C) RISERS SHOWN TO ABOVE WITH DEF. B.F. (E) 1/4 DIA. RELOCATED AND REF. WAS M-2-445 TO-ZONE (D). DIMS. OF RISERS SHOWN; (G) DIM. WAS 36"-ZONE 2E.	7898 3/4/63 NWM			

REVISIONS

NO.	DRAWING TITLE	REFERENCE DRAWINGS
4	H-2-44746	WASTE STOR. TK. SLUDGE LEV. IND.
3	H-2-44737	DOME RISERS & PLUGS - DETAILS.
2	H-2-44550	DRAWING INDEX.
1	WWS 8237	CONSTRUCTION SPECS.

NEXT USED ON

APPROVED FOR CONST. — APPROVED FOR PURCHASE — APPROVED FOR DESIGN

SCALE NONE

DRAWN BENSON

T. Delaney

CLASSIFICATION NONE

U. S. ATOMIC ENERGY COMMISSION
HANFORD ATOMIC PRODUCTS OPERATION
GENERAL ELECTRIC

INSTRUMENTATION
WASTE STORAGE TANK
SLUDGE LEVEL INDICATOR

241-AX TANK FARM

BLDG. 241 AX — DRAWING NO. 5900-32

DWG. NO. H-2-44745

CONTROL ELEMENTARY DIAGRAM FOR THREE COMPRESSORS

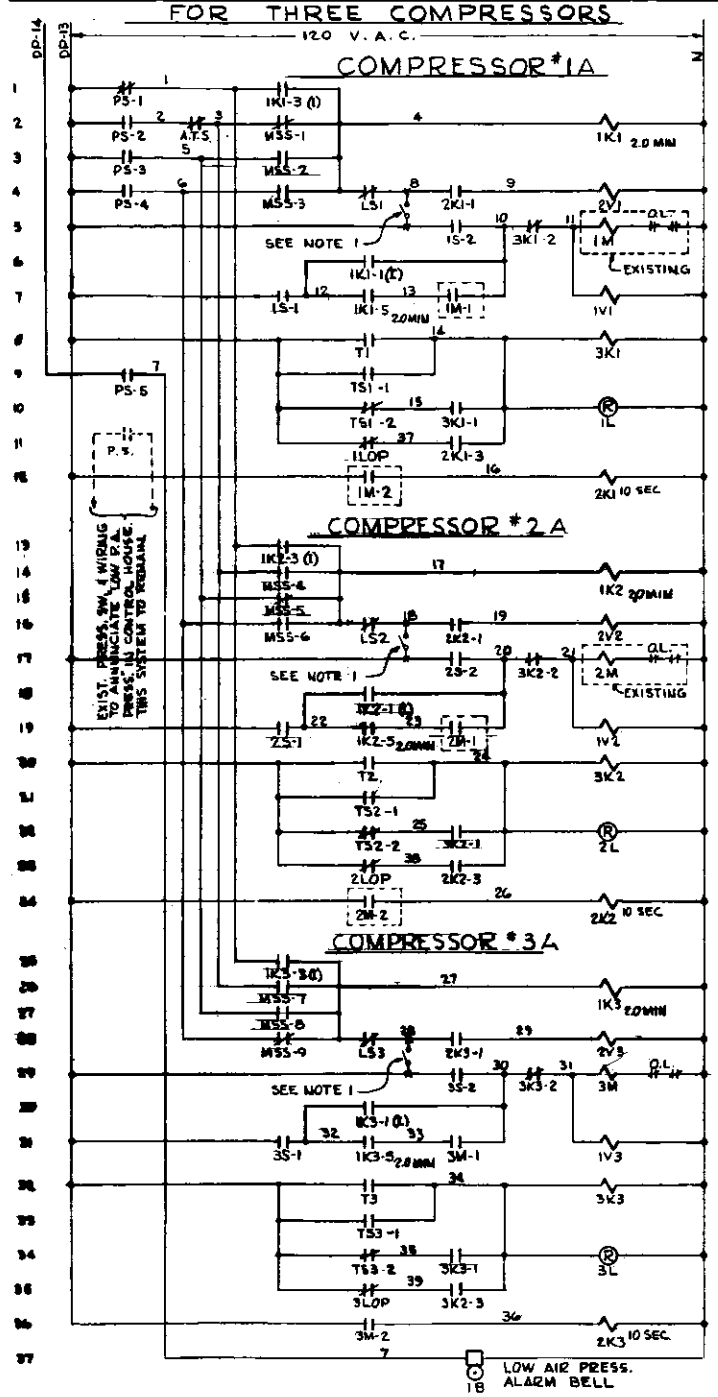

LEGEND

A.T.S. - AUTO-TRANSFER SW. CONTACTS - CLOSED ON NORMAL POWER
PS-1 - PRESSURE SW. - CONTACTS OPEN ABOVE 40 PSI, CLOSE AT 37 PSI.
PS-2 - PRESSURE SW - CONTACTS CLOSED BELOW 35 P.S.I, OPEN AT 38 PSI.
PS-3 - PRESSURE SW - CONTACTS CLOSED BELOW 30 P.S.I, OPEN AT 37 PSI.
PS-4 - PRESSURE SW - CONTACTS CLOSED BELOW 25 P.S.I, OPEN AT 27 PSI.
PS-5 - PRESSURE SW - CONTACTS CLOSED BELOW 20 P.S.I, OPEN AT 22 PSI.
MSS - MASTER SEQUENCE SELECTOR SWITCH.
1S, 2S & 3S - RUN - OFF - AUTO SELECTOR SWITCH.
TS1, TS2, & TS3 - WATER JACKET TEMP - LOW OIL PRESS TEST RESET SW.
LS1, LS2, & LS3 - COMPRESSER UNLOADING SWITCH. (MANUAL)
T1 T2 & T3 - WATER JACKET TEMP - CONTACTS CLOSED ABOVE 180°F.
1M 2M & 3M - 50 HP COMP. MOTOR STARTERS.
1V1, 1V2 & 1V3 - COOLING WATER SOL. VALVE.
2V1, 2V2 & 2V3 - COMP. AIR SOL. VALVE
3K1, 3K2 & 3K3 - CONTROL RELAY W/ 2 N.O. & 2 N.C. CONTACTS.
1K1, 1K2 & 1K3 - RELAY W/ 2 N.O. INST. CONT. & 1 N.O. CONT. W/ T.D. ON DROPOUT.
2K1, 2K2 & 2K3 - RELAY W/ 2 N.O. CONT W/ T.D. ON PULL IN.
1LOP, 2LOP & 3LOP - LOW OIL PRESS. SW. - CONTACTS CLOSE IN LOSS OF PRESS.

CONTACT ARRGT FOR TS1, TS2 & TS3		
POSITION \ CONTACT	1	2
TEST	X	X
NORMAL		X
RESET		

CONTACT ARRGT FOR LS1, LS2 & LS3	
POSITION \ CONTACT	1
LOAD	X
UNLOAD	

CONTACT ARRGT FOR MSS												
POSITION \ CONTACT	1	2	3	4	5	6	7	8	9	10	11	12
1-2-3	X				X				X	X		
2-3-1			X	X				X			X	
3-1-2			X			X	X					X

CONTACT ARRGT FOR 1S 2S & 3S		
POSITION \ CONTACT	1	2
RUN		X
OFF		
AUTO	X	

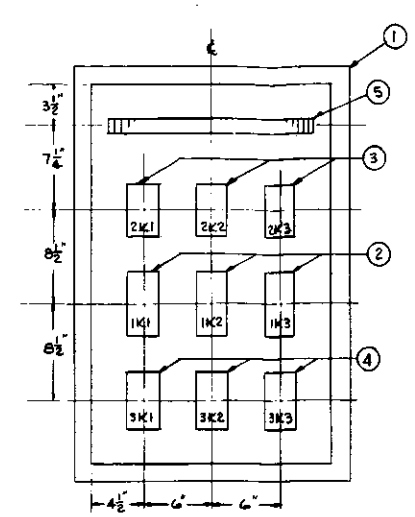

RELAY CABINET ARR'GT (W/ DOOR REMOVED)
SCALE 2" = 1'-0"

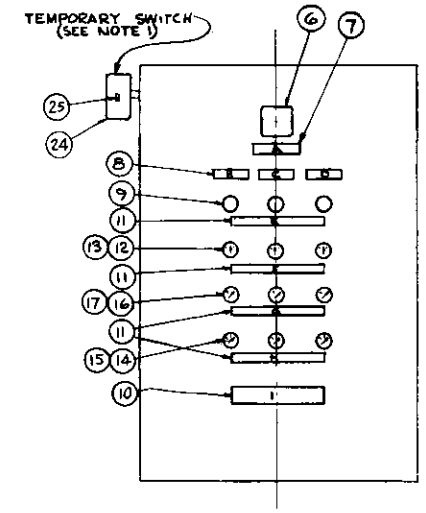

RELAY CABINET DOOR ARR'G'T
SCALE 2" = 1'-0"

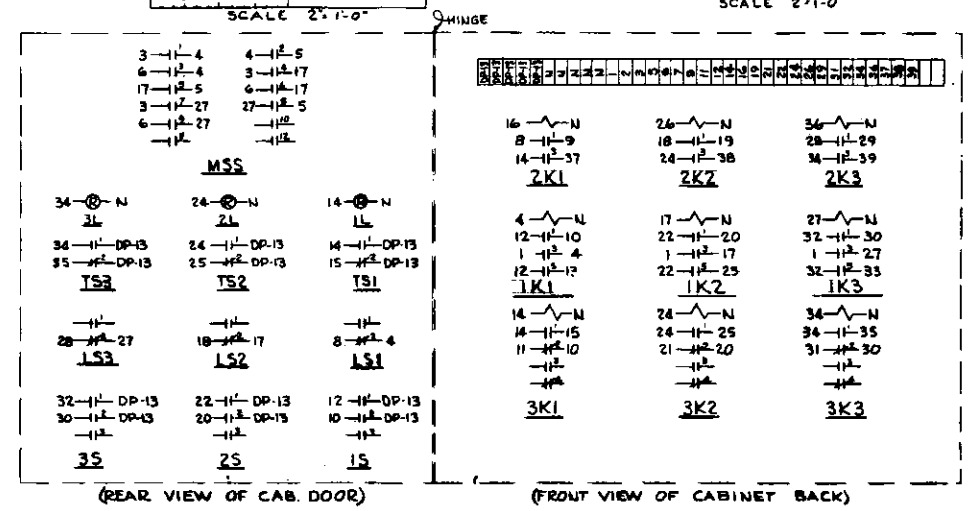

RELAY CABINET CONNECTION DIAGRAM
NO SCALE

NAMEPLATE LEGEND

A - MASTER SEQUENCE SELECTOR SW.
B - CONTROLS FOR COMPRESSOR #1A
C - CONTROLS FOR COMPRESSOR #2A
D - CONTROLS FOR COMPRESSOR #3A
E - COMP. COOLING WATER TEMP HIGH, OR LOW OIL PRESS.
F - COMP. THERMOSTAT TEST AND RESET
G - COMP. UN LOADING SWITCH
H - AIR COMPRESSOR CONTROL SWITCH
I - AIR COMPRESSOR CONTROL PANEL

ITEM NO.	DESCRIPTION	QTY.
1	RELAY ENCL. 36"×24"×10" NEMA 12-W/ BACK PNL & HINGED DOOR. HANFORD STD J-8-2	
2	RELAY-120 VAC. W/1 N.O. INSTANT. 7 AMP CONTACT & 1 7 AMP N.O. CONTACT W/ 10-210 SEC. T.D. ON DROPOUT.	
3	RELAY-120 VAC. W/2 N.O. 7 AMP. CONTACTS W/. 2-30 SEC. T.D. ON PULLIN.	
4	RELAY-120 VAC. W/ 2 N.O. & 2 N.C. 10 AMP CONTACTS.	
5	36 POINT TERMINAL STRIP W/MARKING STRIP.	
6	CAM OPERATED CONTROL SWITCH W/6 STAGES OF 2 PAIR 20 AMP CONTACTS, MAX. LENGTH-7"	
7	NAMEPLATE-1"×4" W/ 1/2" HIGH LETTERS HAN. STD. J-2-7	
8	NAMEPLATE-1"×3" W/ 1/2" HIGH LETTERS HAN STD J-2-7	
9	120 VAC. OILTIGHT IND. LIGHT W/RED CAP.	
10	NAMEPLATE 2"×8" W/ 3/4" HIGH LETTERS HAN. STD J-2-7	
11	NAMEPLATE 3/4"×6" W/ 3/8" HIGH LETTERS HAN STD J-2-7	
12	OILTIGHT SELECTOR SW.-3 POS. SPRING RETURN TO CENTER.	
13	NAMEPLATE-EXTRA LARGE-3 FIELD-BLACK ENGRAVED "TEST"-"NORMAL"-"RESET"	
14	OILTIGHT SELECTOR SW. - 3 POSITION.	
15	NAMEPLATE-EXTRA LARGE-3 FIELD-BLACK ENGRAVED "RUN"-"OFF"-"AUTO"	
16	2 POSITION KEY LOCKED OILTIGHT SELECTOR SW. KEY REMOVABLE IN EITHER POSITION. (ALL KEYED ALIKE)	
17	NAMEPLATE-EXTRA LARGE-2 FIELD-BLACK-ENGRAVED "LOAD"-"UNLOAD"	
18	MISC. WIRE & HARDWARE	
19	AUTOMATIC TRANSFER SWITCH, SIZE 5, NEMA 1 ENCLOSURE, WITH 3 AUX. CONTACTS, 440 VOLTS	
20	PHASE FAILURE RELAYS-440 COIL W/ 2 NO. CONTACTS	
21	TIME DELAY RELAY-440 V AC COIL & 2 N.O. CONTACTS WITH TIME DELAY ON PULL-IN 0-30 SEC.	
22	TIME DELAY RELAY-440 COIL W/ 1 N.C. INSTANTANEOUS CONTACT & 1 N.O. CONTACT W/ TIME DELAY ON PULL-IN 0-30 SEC.	
23	OIL TIGHT PUSHBUTTON W/ N.C. CONTACT	
24	"HANDI" BOX W/ SWITCH PLATE COVER	
25	16A-120V S.P. LIGHT SWITCH.	

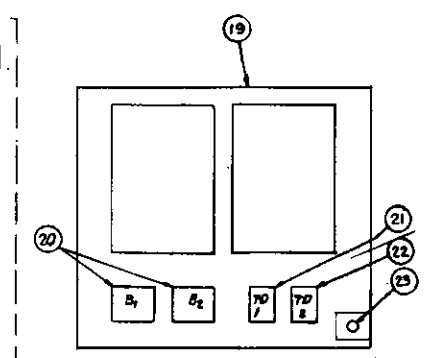

AUTO-TRANSFER SWITCH
NO SCALE
(SEE H-2-44721 FOR ELEM. DIAG.)

FIGURE 19

H-2-44730 | 1

[illegible]

NOTE:
1. THIS SWITCH SHALL BE INSTALLED FOR COMPRESSOR RUN-IN AND TESTS. (LS1, LS2 & LS3 MUST BE IN "UNLOAD" POSITION WHEN THIS TEMPORARY SWITCH IS USED) REMOVE WHEN COMPRESSOR TESTING IS COMPLETED

NO.	DESCRIPTION	REV. BY DATE	APP'D BY	FOR	DATE
1	OPERATION NOTES ATHEU D. REMOVED SEQUENCE OF				

REVISIONS

NO.	DWG. NO.	DRAWING TITLE
8	H-2-56349	ELEC. COMP. BLDG. WIRING DIA.
7	J-2-7	INST HANFORD STD
6	J-2-2	INST. HANFORD STD
5	H-2-44728	ELEC. COMP. HOUSE PLAN & DET.
4	H-2-44721	ELEC. BLOCK & ELEM. DIAG.
3	H-2-44705	ELEC TANK FARM LAYOUT & PLOT
2	H-2-44550	DWG INDEX
1	WHS-8237	CONSTRUCTION SPECS

REFERENCE DRAWINGS

NEXT USED ON

CAC-945 W 30219

CLASSIFICATION: NONE

SCALE AS NOTED

SOVAY ENGINEERS, INC.
SPOKANE HOUSTON RATON ROUGE
SICILIAN-BITAS RAS ZIZ

U. S. ATOMIC ENERGY COMMISSION
HANFORD ATOMIC PRODUCTS OPERATION
GENERAL ELECTRIC

ELECTRICAL COMPRESSOR BUILDING CONNECTIONS AND DETAILS

PUREX 241-AX TANK FARM

241-AX | 7302

H-2-44730

Document 4 Tage

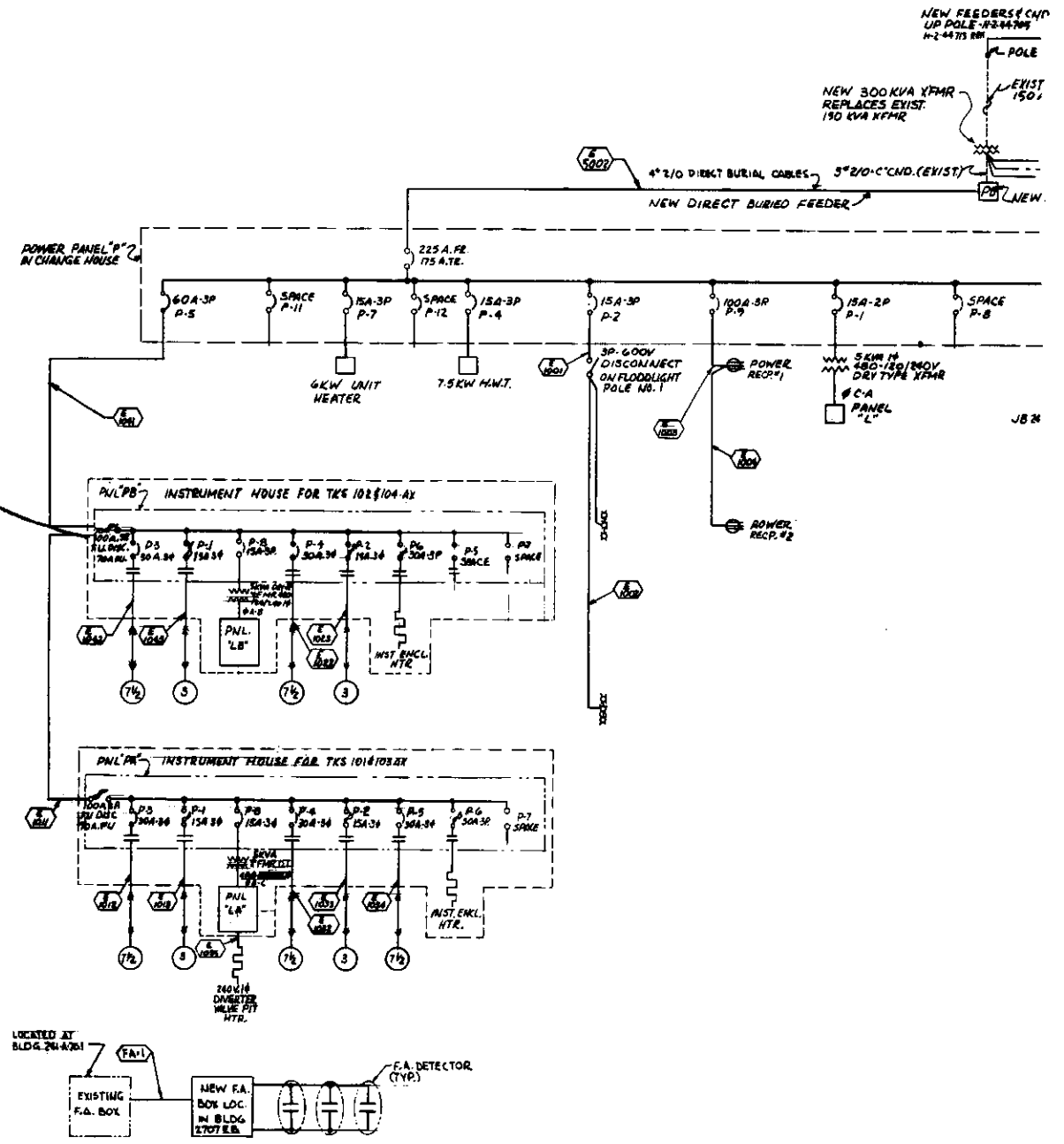

BLDG 2707 EB F.A. SYSTEM 2

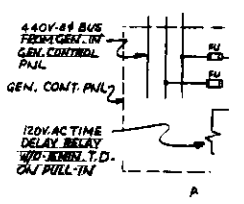

COMPRESS. CONT.

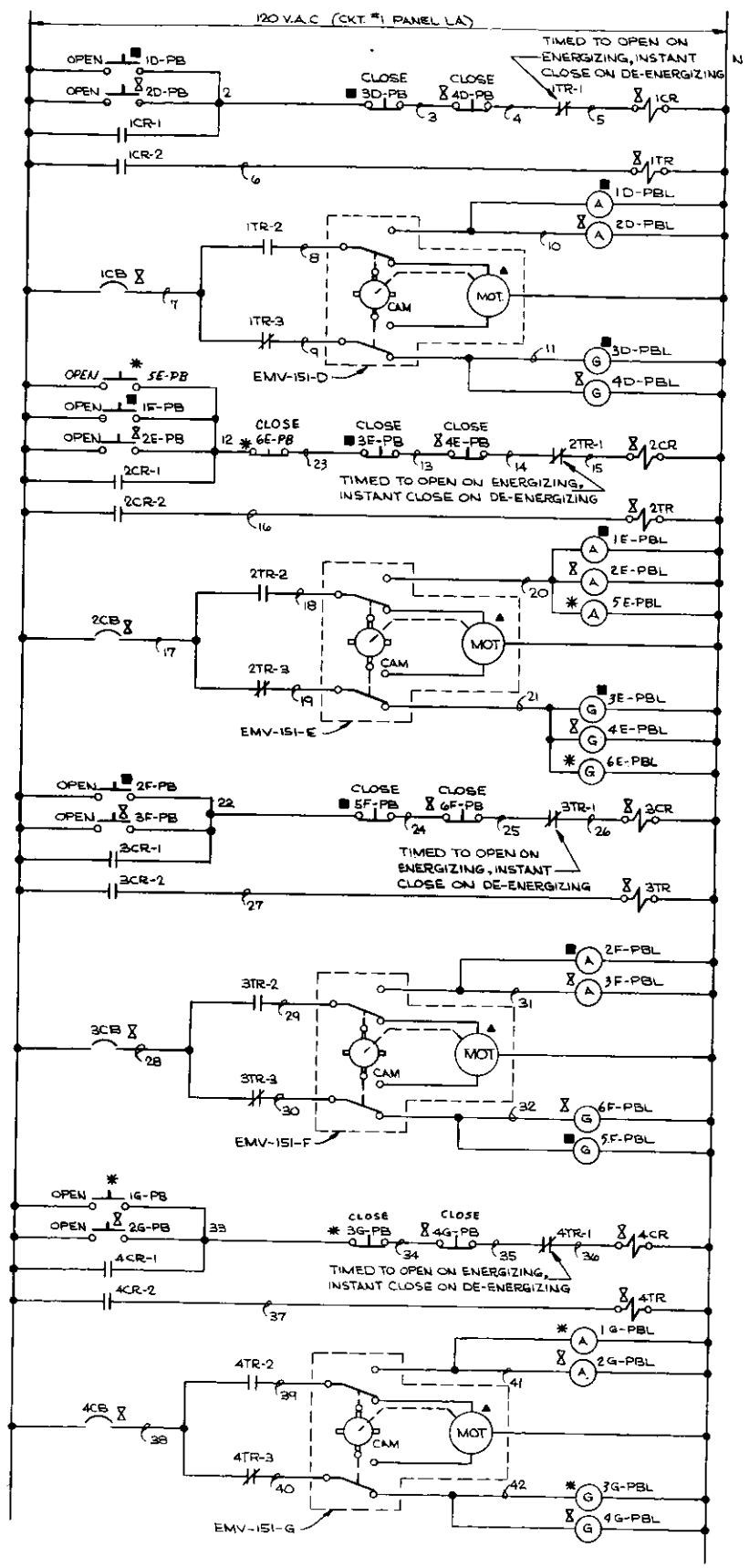

PURGE WATER VALVE CONTROL ELEM. 1a 2

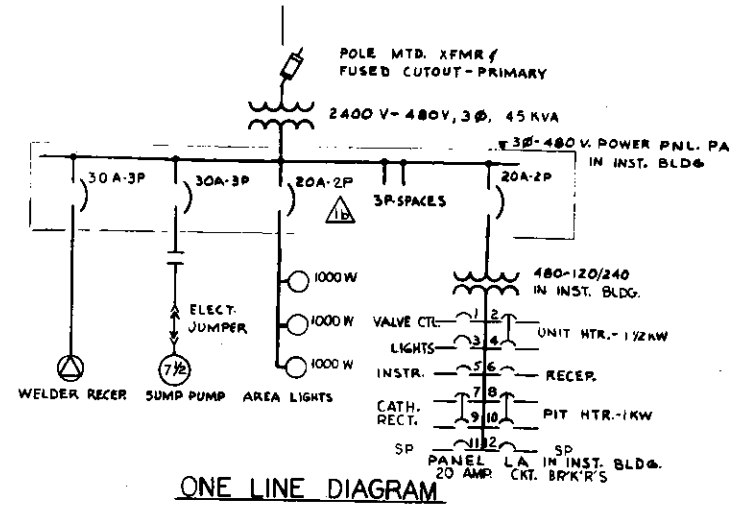

ONE LINE DIAGRAM

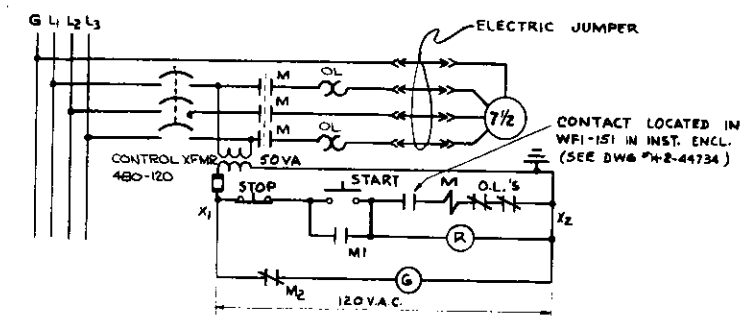

241-AX-151 DIVERTER SUMP PUMP ELEM.

QTY.	TY. NO.	DESCRIPTION

LEGEND

EMV	ELECTRIC MOTOR OPERATED VALVE
TR	TIMED RELAY WITH AUXILIARY CONTACT
PB	ILLUMINATED PUSHBUTTON- XFMR. TYPE
PBL	ILLUMINATED PUSHBUTTON LAMP
(A)	INDICATES COLOR OF PBL (G-GREEN, A-AMBER)
1d	CIRCUIT BREAKER
CR	ALLEN BRADLEY TYPE CL CONTROL RELAY

1c NOTE

1. EQUIPMENT LOCATIONS AS FOLLOWS:

- ✱ DENOTES LOCATED IN 202A BLDG. CENTRAL CONTROL ROOM.
- ■ DENOTES LOCATED IN 202A BLDG. HEAD END CONTROL ROOM.
- ▲ DENOTES LOCATED IN VALVE PIT
- ⧗ CONTROL PANEL IN INSTRUMENT BLDG. (151)

FIGURE 21

H-2-44826 | SHEET 1/1 | REV. 2

HANFORD ATOMIC PRODUCTS OPERATION GENERAL ELECTRIC RICHLAND WASHINGTON
CAL. & F. APPROVED
BY ... DATE 6-9-66
APPROVAL ... DOES NOT ... ENGINEERING AND ... AEC Manual

REV.		DESCRIPTION	REV. BY DATE	APP'D BY	FOR	DATE
M	2	CHANGED PURGE WATER VALVE CONTROL ELEM.	CALDWELL 6-9-66		NITEO	
M	1	(a) CHANGED PURGE WATER VALVE CONT. ELEM. (b) WAS 1P ZONE A8 (c) ADDED NOTE (6) REVISED LEGEND			NITRO	4/8/66

REVISIONS

REV.	DWG. NO.	DRAWING TITLE
4	H-2-44829	ELECT.-CENTRAL CTL. RM-PLAN & EL.
3	H-2-44828	ELECT.-HEAD END CTL. RM-PLAN & EL.
2	H-2-44750	DRAWING INDEX
1	HW5-7337	CONSTRUCTION SPECS

REFERENCE DRAWINGS

NEXT USED ON

CHECK PRINT	COMMENT PRINT	APPROVED FOR CONST.
ISSUE NO. 2	DATE 8/26/65	APPROVED FOR PURCHASE
SCALE NONE		APPROVED FOR DESIGN
DRAWN M. Spalter	DATE 7-1-64	
CHECKED	DATE	
APPROVED	DATE	
PROJECT CAC-970	PART NO. W40308	
DESIGNED BY D. M. Jensen	DATE 9/28/64	CLASSIFICATION NONE

BOVAY ENGINEERS, INC. SPOKANE HOUSTON BATON ROUGE

U. S. ATOMIC ENERGY COMMISSION
HANFORD ATOMIC PRODUCTS OPERATION
GENERAL ELECTRIC

ELECTRICAL BLOCK & ELEMENTARY DIAGRAMS

PUREX WASTE ROUTING

PLANT NO. 202-A | PROJECT NO. 7301, 7302, 7502

DWG. NO. H-2-44826 | SHEET 1/1 | REV. 2