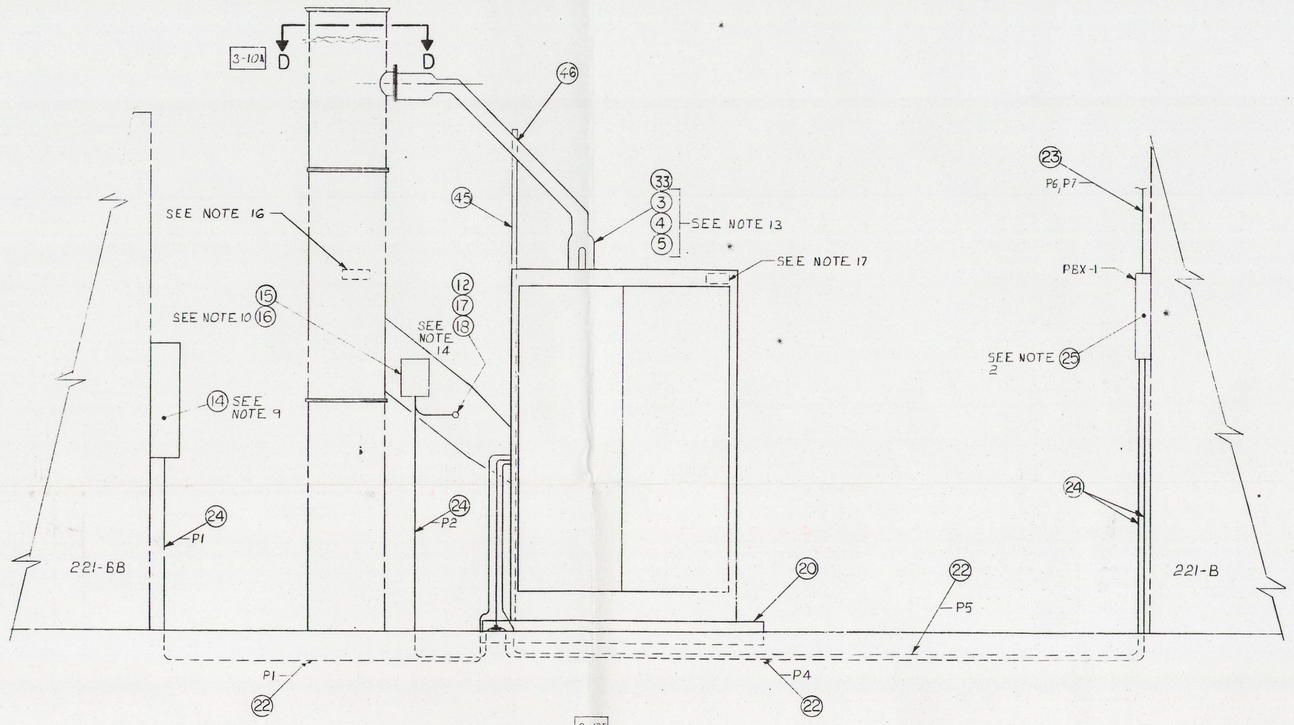

VIEW A-A 2-13L
SCALE: 1"=1'-0"

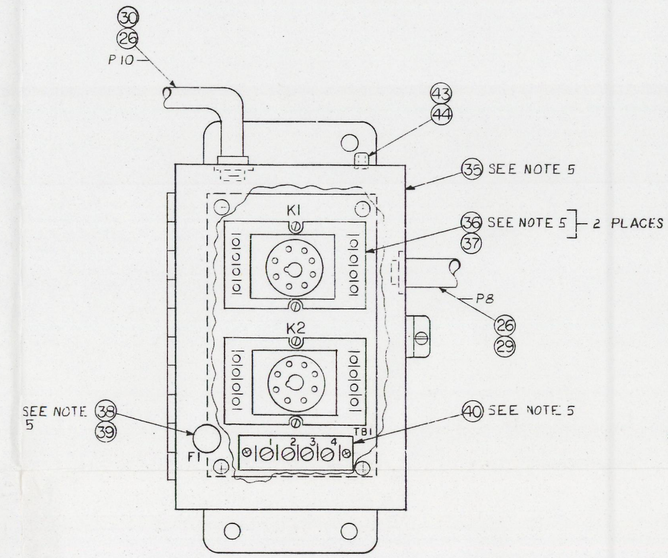

DETAIL I 4-13D
SCALE: 1/1

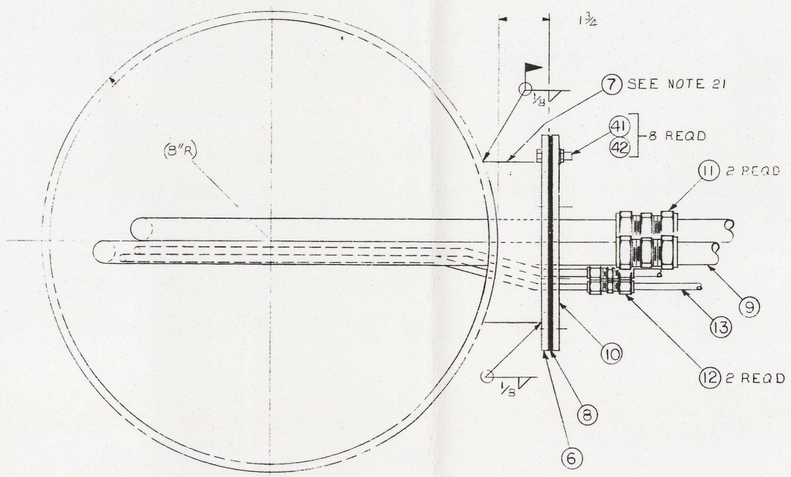

SECTION D-D 3-12G
SCALE: 1/2

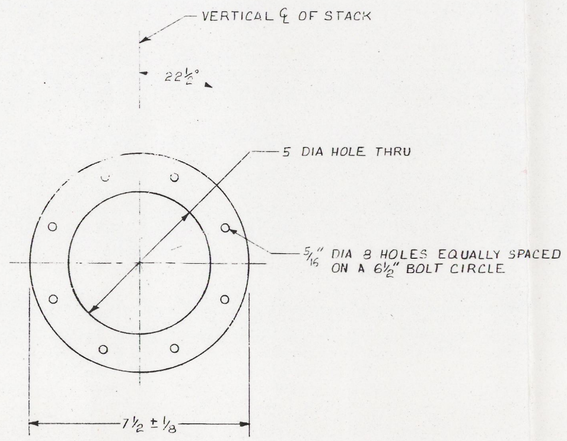

6 FLANGE
SCALE: 1/2

CAUTION
NOT COMPLETE WITHOUT CURRENT STATUS OF OUTSTANDING ECNS FROM DATA BASE

MAR 24 1993

SEP 1993 RECEIVED EDMC

THIS DRAWING HAS BEEN APPROVED BY A ROCKWELL DOCUMENT REVIEW BOARD. REVISION NO. 0
CHAIRMAN DW Commander DATE 8-3-82
REVIEW NUMBER 8-87

QUALITY ASSURANCE LEVEL I

DRAWING APPROVALS	DATE
DRAFTING	7/7/82
RD Keck	7/8/82
RM Mowrey	7/7/82
	7/8/82
R. STANTON	
	7/9/82
	7/9/82
DRAWN R. N. Olson	6/24/82

U. S. Department of Energy
Richland Operations Office
Rockwell Hanford Operations
Richland, Washington 99352

STACK MONITOR INSTALLATION 296-B-5

SCALE	BLDG NO.	JOB NO.
AS NOTED	221-BB	5901

CLASSIFICATION	BY	DRAWING NO.	SHEET NO.	SHEETS
NONE	NOT REQD	H-2-93287	3	6

DWG NO.	DRAWING TITLE
REFERENCE DRAWINGS	
NEXT USED ON H-2-93287 SH. 1	

MICRO FYI?	QUALITY ASSURANCE	RESPONSIBLE ENGINEER	DRAFTING	CHKD BY DATE	REV BY DATE	DESCRIPTION	REV NO.
REVISION APPROVALS						REVISIONS	LAST REV.
COMMENT PRT ISSUE NO. 1	9/22/92 DATE		CHECK PRT. ISSUE NO. 1	6-25-92 DATE			0

DRAWING STATUS AI E-421

0031017

START

0031017

DETAIL I 4-13D
SCALE: 1/1

CAUTION
NOT C...
CURRENT ...
EC...

ICED

SEP 1993
RECEIVED
EDMC

REVIEW NUMBER	1	2	3	4
	THIS DRAWING HAS BEEN APPROVED BY A ROCKWELL DOCUMENT REVIEW BOARD. REVISION NO. 0			
	CHAIRMAN J.W. Cammann	DATE 8-3-82		

QUALITY ASSURANCE LEVEL I

DRAWING APPROVALS	DATE
APPD FOR QUALITY ASSURANCE	
APPD	8/3/82
APPD	7/3/82
APPD	8/3/82
APPD	8/3/82
RESPONSIBLE ENGINEER R. STANTON	
CHECKED	8/3/82
CHECKED	8/3/82
DRAWN R. Nelson	6/21/82

U. S. Department of Energy
Richland Operations Office
Rockwell Hanford Operations
Richland, Washington 99352

STACK
MONITOR INSTALLATION
296-B-5

SCALE	BLDG NO.	JOB NO.
AS NOTED	221-BB	5701

CLASSIFICATION	BY	DRAWING NO.	SHEET NO.	SHEETS
NONE	NOT REQD	H-2-93287	3	6

REV. NO.	CHKD BY DATE	REV BY DATE	DESCRIPTION

REVISIONS

LAST REV.	DATE	CHECK PRT. ISSUE NO.	DATE
0	2/82	6-25-82	

DRAWING STATUS D.I. E-421

4 3 2 1

7 9