1239344

CLASS 1 MODIFICATIONS TO HANFORD FACILITY RCRA PERMIT

SECTION 3 OF 7

Table C-2 Original List of Toxic Air Pollutants (669 constituents)

CAS#	Constituent	Former Class A or B TAP and Retained by WAC Update[a]	Class A or B TAPs that Appear on Other RDQO Input Lists[b]	RDQO Input Update List [c]	TWINS / BBI [d]
7440-48-4a	Cobalt as Co metal dust and fume	x			
7440-50-8C	Copper, Dusts and mists, as Cu	x			
74-90-8	Hydrogen cyanide	x			
75-44-5	Phosgene	x			
7550-45-0	Titanium tetrachloride	x			
75-56-9	Propylene oxide	x			
759-73-9	N-Nitroso-N-ethylurea	x			
76-06-2	Chloropicrin	x			
7647-01-0	Hydrogen chloride	x			
7664-38-2	Phosphoric acid	x			
7664-39-3	Hydrogen fluoride	x			
7664-93-9	Sulfuric acid	x			
7758-97-6	Lead chromate, as Cr	x			
7782-41-4	Fluorine	x			
7782-49-2C	Selenium compounds, as Se	x			
7782-50-5	Chlorine	x			
7783-06-4	Hydrogen sulfide	x			
7783-07-5	Hydrogen selenide, as Se	x			
7784-42-1	Arsine	x			
7803-51-2	Phosphine	x			
79-06-1	Acrylamide	x	x	x	
79-44-7	Dimethylcarbamoyl chloride	x			
80-62-6	Methyl methacrylate	x	x	x	
822-06-0	Hexamethylene diisocyanate	x			
838-88-0	4,4'-Methylenebis(2-methylaniline)	x			
85-44-9	Phthalic anhydride	x	x	x	
90-04-0	o-Anisidine	x		x	
924-16-3	N-Nitrosodi-n-butylamine	x	x	x	
92-67-1	4-Aminobiphenyl	x	x	x	

Table C-2 Original List of Toxic Air Pollutants (669 constituents)

CAS#	Constituent	Former Class A or B TAP and Retained by WAC Update[a]	Class A or B TAPs that Appear on Other RDQO Input Lists[b]	RDQO Input Update List [c]	TWINS / BBI [d]
92-87-5	Benzidine	x			
95-53-4	o-Toluidine (2-methylaniline)	x			
95-80-7	Toluene-2,4-diamine	x			
96-09-3	Styrene oxide	x			
96-12-8	1,2-Dibromo-3-chloropropane	x	x	x	
96-18-4	1,2,3-Trichloropropane	x	x	x	
96-45-7	Ethylenethiourea	x			
97-56-3	o-Aminoazotoluene	x			
NA22	Fine mineral fibers	x			
100-01-6	4-Nitroaniline		x	x	
100-02-7	4-Nitrophenol		x	x	x
108-94-1	Cyclohexanone		x	x	x
110-86-1	Pyridine		x	x	x
114-26-1	Propoxur		x	x	
120-82-1	1,2,4-Trichlorobenzene		x	x	x
122-39-4	N,N-Diphenylamine		x	x	
126-98-7	2-Methyl-2-propenenitrile		x	x	
126-99-8	Chloroprene		x	x	
131-11-3	Dimethyl phthalate		x	x	
141-78-6	Acetic acid ethyl ester		x	x	x
1563-66-2	Carbofuran		x	x	
16752-77-5	Methomyl		x	x	
17804-35-2	Benomyl		x	x	
298-00-0	Methyl parathion		x	x	
298-02-2	Phorate		x	x	
51-28-5	2,4-Dinitrophenol		x	x	
534-52-1	4,6-Dinitro-o-cresol		x	x	
56-38-2	Parathion		x	x	
57-12-5	Cyanide		x	x	

Table C-2 Original List of Toxic Air Pollutants (669 constituents)

CAS#	Constituent	Former Class A or B TAP and Retained by WAC Update[a]	Class A or B TAPs that Appear on Other RDQO Input Lists[b]	RDQO Input Update List [c]	TWINS / BBI [d]
60-29-7	Ethyl ether		x	x	x
63-25-2	Carbaryl		x	x	
67-64-1	2-Propanone (Acetone)		x	x	x
71-36-3	n-Butyl alcohol		x	x	x
72-20-8	Endrin		x	x	
72-43-5	Methoxychlor		x	x	
7440-22-4	Silver		x	x	
7440-47-3	Chromium		x	x	
74-88-4	Iodomethane		x	x	
75-69-4	Trichlorofluoromethane		x	x	x
75-71-8	Dichlorodifluoromethane		x	x	
76-13-1	1,2,2-Trichlorotrifluoroethane		x	x	x
78-83-1	2-Methylpropyl alcohol		x	x	x
82-68-8	Pentachloronitrobenzene (PCNB)		x	x	
84-66-2	Diethyl phthalate		x	x	
84-74-2	Di-n-butylphthalate		x	x	x
93-76-5	2,4,5-T		x	x	
94-75-7	2,4-D		x	x	
95-50-1	1,2-Dichlorobenzene		x	x	x
95-95-4	2,4,5-Trichlorophenol		x	x	x
98-86-2	Acetophenone		x	x	
98-95-3	Nitrobenzene		x	x	x
106-50-3	p-Phenylenediamine		x		
123-31-9	Hydroquinone		x		
134-32-7	alpha-Naphthylamine		x		
504-29-0	2-Aminopyridine		x		
528-29-0	Dinitrobenzene, all isomers		x		
54-11-5	Nicotine		x		

Table C-2 Original List of Toxic Air Pollutants (669 constituents)

CAS#	Constituent	Former Class A or B TAP and Retained by WAC Update[a]	Class A or B TAPs that Appear on Other RDQO Input Lists[b]	RDQO Input Update List [c]	TWINS / BBI [d]
7429-90-5	Aluminum		x		
75-52-5	Nitromethane		x		
126-73-8	Tributyl phosphate				x
128-37-0	2,6-Bis(tert-butyl)-4-methylphenol				x
591-78-6	2-Hexanone				x
60-34-4	Methylhydrazine				
92-52-4	1,1`-Biphenyl				
75-50-3	Trimethylamine				
100-00-5	p-Nitrochlorobenzene [e]				
106-35-4	3-Heptanone				
106-97-8	Butane				
107-87-9	2-Pentanone				
108-87-2	Methylcyclohexane				
109-66-0	n-Pentane				
109-99-9	Tetrahydrofuran				
110-12-3	5-Methyl-2-hexanone				
110-43-0	2-Heptanone				
110-83-8	Cyclohexene				
111-65-9	n-Octane				
111-84-2	n-Nonane				
123-19-3	4-Heptanone				
123-38-6	n-Propionaldehyde				
123-86-4	Acetic acid n-butyl ester				
1321-64-8	Pentachloronaphthalene				
1335-87-1	Hexachloronaphthalene				
1335-88-2	Tetrachloronaphthalene				
142-82-5	n-Heptane				
144-62-7	Oxalic acid				
2234-13-1	Octachloronaphthalene				

Table C-2 Original List of Toxic Air Pollutants (669 constituents)

CAS#	Constituent	Former Class A or B TAP and Retained by WAC Update[a]	Class A or B TAPs that Appear on Other RDQO Input Lists[b]	RDQO Input Update List [c]	TWINS / BBI [d]
287-92-3	Cyclopentane				
3825-26-1	Ammonium perfluorooctanoate				
4170-30-3	2-Butenaldehyde				
563-80-4	3-Methyl-2-butanone				
627-13-4	Nitric acid, propyl ester				
64-17-5	Ethyl alcohol				
64-18-6	Formic acid				
64-19-7	Acetic acid				
684-16-2	Hexafluoroacetone				
71-23-8	n-Propyl alcohol				
75-43-4	Dichlorofluoromethane				
75-65-0	2-Methyl-2-propanol				
76-14-2	1,2-Dichloro-1,1,2,2-tetrafluoroethane				
78-92-2	1-Methylpropyl alcohol				
88-89-1	Picric acid				
96-22-0	3-Pentanone				
7440-16-6	Rhodium Metal				
7440-31-5	Tin, oxide & inorganic except SnH4				
7440-50-8	Copper				
7553-56-2	Iodine				
101-84-8	Diphenyl ether				
107-18-6	2-Propen-1-ol				
107-31-3	Formic acid, methyl ester				
107-66-4	Dibutylphosphate				
108-03-2	1-Nitropropane				
108-20-3	Bis(isopropyl) ether				
108-93-0	Cyclohexanol				
110-62-3	n-Valeraldehyde				
121-69-7	Dimethylaniline				

Table C-2 Original List of Toxic Air Pollutants (669 constituents)

CAS#	Constituent	Former Class A or B TAP and Retained by WAC Update[a]	Class A or B TAPs that Appear on Other RDQO Input Lists[b]	RDQO Input Update List [c]	TWINS / BBI [d]
123-51-3	3-Methyl-1-butanol				
127-19-5	N,N-Dimethylacetamide				
1321-65-9	Trichloronaphthalene				
132-64-9	Dibenzofuran				
141-79-7	4-Methyl-3-penten-2-one				
1582-09-8	Trifluralin				
25551-13-7	Trimethyl benzene				
26140-60-3	Terphenyls				
540-59-0	1,2-Dichloroethylene				
540-84-1	2,2,4-Trimethylpentane				
603-34-9	Triphenyl amine				
74-97-5	Bromochloromethane				
74-99-7	Methylacetylene				
75-12-7	Formamide				
75-55-8	2-Methylaziridine				
75-61-6	Difluorodibromomethane				
75-63-8	Trifluorobromomethane				
75-99-0	2,2-Dichloropropionic acid				
76-03-9	Trichloroacetic acid				
76-11-9	1,1,1,2-Tetrachloro-2,2-difluoroethane				
76-12-0	1,1,2,2-Tetrachloro-1,2-difluoroethane				
76-15-3	Chloropentafluoroethane				
79-09-4	Propanoic acid				
79-20-9	Methyl acetate				
88-72-2	Nitrotoluene				
91-22-5	Quinoline				
92-93-3	4-Nitrobiphenyl				
95-13-6	Indene				
95-49-8	o-Chlorotoluene				

Table C-2 Original List of Toxic Air Pollutants (669 constituents)

CAS#	Constituent	Former Class A or B TAP and Retained by WAC Update[a]	Class A or B TAPs that Appear on Other RDQO Input Lists[b]	RDQO Input Update List [c]	TWINS / BBI [d]
96-69-5	Bis(3-tert-butyl-4-hydroxy-6-methyl-phenyl) sulfide				
98-51-1	p-tert-Butyltoluene				
98-83-9	Methylstyrene				
10025-67-9	Sulfur monochloride				
10025-87-3	Phosphorus oxychloride				
10026-13-8	Phosphorus pentachloride				
10035-10-6	Hydrogen bromide				
100-37-8	Diethylaminoethanol				
100-61-8	N-Methylbenzenamine				
100-63-0	Phenylhydrazine				
100-74-3	N-Ethylmorpholine				
10102-43-9	Nitric oxide				
10210-68-1	Cobalt carbonyl as Co				
102-54-5	Dicyclopentadienyl iron				
102-81-8	2-N-Dibutylaminoethanol				
10294-33-4	Boron tribromide				
105-46-4	sec-Butyl acetate				
105-60-2	Caprolactam, vapor				
105-60-2a	Caprolactam, dust				
106-49-0	p-Toluidine				
106-51-4	p-Benzoquinone				
106-87-6	Vinyl cyclohexene dioxide				
106-92-3	Allyl glycidyl ether				
107-07-3	Ethylene chlorohydrin				
107-15-3	Ethylene diamine				
107-19-7	Propargyl alcohol				
107-20-0	Chloroacetaldehyde				
107-41-5	Hexylene glycol				
107-49-3	Tetraethyl pyrophosphate				

Table C-2 Original List of Toxic Air Pollutants (669 constituents)

CAS#	Constituent	Former Class A or B TAP and Retained by WAC Update[a]	Class A or B TAPs that Appear on Other RDQO Input Lists[b]	RDQO Input Update List [c]	TWINS / BBI [d]
108-11-2	Methyl isobutyl carbinol				
108-18-9	Diisopropylamine				
108-21-4	Isopropyl acetate				
108-24-7	Acetic anhydride				
108-43-0	Chlorophenols				
108-44-1	m-Toluidine				
108-46-3	Resorcinol (1,3-Benzenediol)				
108-83-8	Diisobutyl ketone				
108-84-9	sec-Hexyl acetate				
108-91-8	Cyclohexylamine				
108-98-5	Thiophenol				
109-59-1	Isopropoxyethanol				
109-60-4	n-Propyl acetate				
109-73-9	n-Butylamine				
109-79-5	n-Butyl mercaptan				
109-87-5	Methylal				
109-89-7	Diethylamine				
109-94-4	Ethyl formate				
110-19-0	Isobutyl acetate				
110-54-3D	Hexane, other isomers				
110-91-8	Morpholine				
111-40-0	Diethylene triamine				
111-46-6D	Glycol ethers				
115-29-7	Endosulfan				
115-86-6	Triphenyl phosphate				
115-90-2	Fensulfothion				
118-52-5	1,3-Dichloro-5,5-Dimethyl hydantoin				
118-96-7	2,4,6-Trinitrotoluene				
1189-85-1	tert-Butyl chromate, as CrO3				

Table C-2 Original List of Toxic Air Pollutants (669 constituents)

CAS#	Constituent	Former Class A or B TAP and Retained by WAC Update[a]	Class A or B TAPs that Appear on Other RDQO Input Lists[b]	RDQO Input Update List [c]	TWINS / BBI [d]
119-90-4	3,3'-Dimethoxybenzidine				
119-93-7	3,3'-Dimethylbenzidine.				
12079-65-1	Manganese cyclopentadienyl tricarbonyl				
120-80-9	Catechol				
12108-13-3	Methylcyclopentadienylmanganese tricarbonyl				
12125-02-9	Ammonium chloride (fume)				
121-45-9	Trimethyl phosphite				
121-75-5	Malathion				
121-82-4	Cyclonite				
122-60-1	Phenyl glycidyl ether				
123-42-2	Diacetone alcohol				
123-92-2	Isoamyl acetate				
124-40-3	Dimethylamine				
12604-58-9	Ferrovanadium dust				
126-85-2	Nitrogen mustard N-oxide				
1300-73-8	Xylidine				
1303-86-2	Boron oxide				
1303-96-4Ca	Borates, anhydrous				
1303-96-4Cb	Borates, pentahydrate				
1303-96-4Cc	Borates, decahydrate				
1304-82-1	Bismuth telluride				
1305-62-0	Calcium hydroxide				
1305-78-8	Calcium oxide				
1309-37-1	Iron oxide fume, Fe2O3 as Fe				
1309-48-4	Magnesium oxide fume				
1310-58-3	Potassium hydroxide				
13121-70-5	Cyhexatin				
1314-13-2	Zinc oxide, fume				
1314-20-1	Thorium dioxide				

Table C-2 Original List of Toxic Air Pollutants (669 constituents)

CAS#	Constituent	Former Class A or B TAP and Retained by WAC Update[a]	Class A or B TAPs that Appear on Other RDQO Input Lists[b]	RDQO Input Update List [c]	TWINS / BBI [d]
1314-80-3	Phosphorus pentasulfide				
1319-77-3a	Cresols, syn Cresylic acid				
1321-74-0	Divinyl benzene				
1333-86-4	Carbon black				
1338-23-4	Methyl ethyl ketone peroxide				
133-90-4	Chloramben				
13463-40-6	Iron pentacarbonyl, as Fe				
13494-80-9C	Tellurium & compounds as Te				
13530-65-9	Zinc chromates				
136-78-7	Sesone				
137-05-3	Methyl-2-cyanoacrylate				
137-26-8	Thiram				
138-22-7	n-Butyl lactate				
13838-16-9	Enflurane				
1395-21-7	Subtilisins				
139-91-3	5-(Morpholinomethyl)-3-amino-2-oxazolidinone (furaltudone)				
140-88-5	Ethylacrylate				
141-32-2	Butylacrylate				
141-43-5	Ethanolamine				
141-66-2	Dicrotophos				
142-64-3	Piperazine dihydrochloride				
14484-64-1	Ferbam				
1477-55-0	m-Xylene-a,a'-diamine				
148-01-6	Dinitolamide				
14977-61-8	Chromylchloride				
150-76-5	4-Methoxyphenol				
151-67-7	Halothane				
156-62-7	Calcium cyanamide				
1615-80-1	N,N'-Diethylhydrazine				

Table C-2 Original List of Toxic Air Pollutants (669 constituents)

CAS#	Constituent	Former Class A or B TAP and Retained by WAC Update[a]	Class A or B TAPs that Appear on Other RDQO Input Lists[b]	RDQO Input Update List [c]	TWINS / BBI [d]
16219-75-3	Ethylidene norbornene				
16842-03-8	Cobalt hydrocarbonyl				
17702-41-9	Decaborane				
1912-24-9	Atrazine				
1918-02-1	Picloram				
19287-45-7	Diborane				
1929-82-4	Nitrapyrin				
19624-22-7	Pentaborane				
2039-87-4	o-Chlorostyrene				
20816-12-0	Osmium tetroxide				
2104-64-5	EPN				
21087-64-9	Metribuzin				
21351-79-1	Cesium hydroxide				
2179-59-1	Allyl propyl disulfide				
22224-92-6	Fenamiphos				
2238-07-5	Diglycidyl ether				
2426-08-6	n-Butyl glycidyl ether				
2465-27-2	Auramine (technical grade)				
25013-15-4	Vinyl toluene				
2551-62-4	Sulfur hexafluoride				
25639-42-3	Methylcyclohexanol				
2646-17-5	Oil orange SS				
26628-22-8	Sodium azide				
26952-21-6	Iso-ocytl alcohol				
2698-41-1	o-Chlorobenylidene malonitrile				
2699-79-8	Sulfuryl fluoride				
28434-86-8	3,3'-Dichloro-4,4'-diaminodiphenyl ether				
29191-52-4	Anisidine (o-,p- isomers)				
2921-88-2	Chlorpyrifos				

Table C-2 Original List of Toxic Air Pollutants (669 constituents)

CAS#	Constituent	Former Class A or B TAP and Retained by WAC Update[a]	Class A or B TAPs that Appear on Other RDQO Input Lists[b]	RDQO Input Update List [c]	TWINS / BBI [d]
2971-90-6	Clopidol				
299-84-3	Ronnel				
299-86-5	Crufomate				
300-76-5	Naled				
302-70-5	Nitrogen mustard N-oxide hydrochloride				
314-40-9	Bromacil				
330-54-1	Diuron				
3333-52-6	Tetramethyl succinonitrile				
334-88-3	Diazomethane				
3383-96-8	Temephos				
34590-94-8	Dipropylene glycol methyl ether				
353-50-4	Carbon oxyfluoride				
35400-43-2	Sulprofos				
3547-04-4	DDE (p,p'-Dichlorodiphenyldichloroethylene)				
3687-31-8	Lead arsenate, as Pb3 (A2O4)2				
3689-24-5	Tetraethyldithiopyrophosphate (TEDP)				
4016-14-2	Isopropyl glycidyl ether (IGE)				
4098-71-9	Isophorone diisocyanate				
420-04-2	Cyanamide				
460-19-5	Cyanogen				
463-51-4	Ketene				
463-58-1	Carbon oxide sulfide (COS)				
4685-14-7	Paraquat				
479-45-8	Tetryl				
506-77-4	Cyanogen chloride				
509-14-8	Tetranitromethane				
5124-30-1	Methylene-bis-(4-cyclo-hexylisocyanate)				
540-88-5	tert-Butyl acetate				
541-85-5	Ethyl amyl ketone				

Table C-2 Original List of Toxic Air Pollutants (669 constituents)

CAS#	Constituent	Former Class A or B TAP and Retained by WAC Update[a]	Class A or B TAPs that Appear on Other RDQO Input Lists[b]	RDQO Input Update List [c]	TWINS / BBI [d]
542-92-7	Cyclopentadiene				
552-30-7	Trimellitic anhydride				
55-38-9	Fenthion				
555-84-9	1-(5-Nitrofurfurylidene)amino)-2-imidazolidinone				
55-63-0	Nitroglycerin				
556-52-5	Glycidol				
55720-99-5	Chlorinated diphenyl oxide				
558-13-4	Carbon tetrabromide				
563-12-2	Ethion				
5714-22-7	Sulfur pentafluoride				
57-24-9	Strychnine				
583-60-8	o-Methylcyclohexanone				
592-62-1	Methyl azoxymethyl acetate				
59355-75-8	Methyl acetylene-propadiene mixture (MAPP)				
594-42-3	Perchloromethyl mercaptan				
594-72-9	1,1-Dichloro-1-nitroethane				
600-25-9	1-Chloro-1-nitropropane				
613-35-4	N,N-Diacetylbenzidine				
626-17-5	m-Phthalodinitrile				
626-38-0	sec-Amyl acetate				
62-74-8	Fluoroacetic acid, sodium salt (Fratol)				
628-63-7	n-Amyl acetate				
628-96-6	Ethylene glycol dinitrate				
638-21-1	Phenylphosphine				
64091-91-4	4-(Methylnitrosamino)-1-(3-pyridyl)-1-butanone				
64-67-5	Diethyl sulfate				
67-45-8	Furazolidone				
680-31-9	Hexamethylphosphoramide				
68-11-1	Thioglycolic acid				

Table C-2 Original List of Toxic Air Pollutants (669 constituents)

CAS#	Constituent	Former Class A or B TAP and Retained by WAC Update[a]	Class A or B TAPs that Appear on Other RDQO Input Lists[b]	RDQO Input Update List [c]	TWINS / BBI [d]
681-84-5	Methyl silicate				
68476-85-7	Liquified petroleum gas				
6923-22-4	Monocrotophos				
696-28-6	Dichlorophenylarsine				
7429-90-5Ca	Aluminum, Al alkyls				
7429-90-5Cb	Aluminum, as AL pyro powders				
7429-90-5Cc	Aluminum, as Al soluble salts				
7429-90-5Ce	Aluminum, as Al welding fumes				
7439-89-6D	Iron salts, soluble as Fe				
7439-96-5Cb	Manganese fume				
7439-97-6Ca	Mercury, Aryl & inorganic cmpd				
7439-97-6Cb	Mercury, as Hg Alkyl compounds				
7439-97-6Cc	Mercury, vapors except alkyl				
7439-98-7Ca	Molybdenum, insoluble cpds				
7439-98-7Cb	Molybdenum, as Mo soluble cpds				
7440-02-0C	Nickel compounds				
7440-06-4	Platinum, metal				
7440-06-4C	Platinum, soluble salts as Pt				
7440-16-6Ca	Rhodium, insoluble compounds				
7440-16-6Cb	Rhodium, soluble compounds				
7440-22-4Da	Silver, soluble compounds as Ag				
7440-25-7C	Tantalum, metal & oxide dusts				
7440-28-0C	Thallium, soluble compounds, Tl				
7440-31-5a	Tin, metal				
7440-31-5C	Tin, organic compounds, as Sn				
7440-33-7Ca	Tungsten, insoluble compounds				
7440-33-7Cb	Tungsten, soluble compounds				
7440-36-0C	Antimony & compounds as Sb				
7440-39-3Da	Barium, soluble compounds Ba				

Table C-2 Original List of Toxic Air Pollutants (669 constituents)

CAS#	Constituent	Former Class A or B TAP and Retained by WAC Update[a]	Class A or B TAPs that Appear on Other RDQO Input Lists[b]	RDQO Input Update List [c]	TWINS / BBI [d]
7440-41-7a	Beryllium powder				
7440-47-3Db	Chromium (II) compounds, as Cr				
7440-47-3Dc	Chromium (III) compounds, Cr				
7440-58-6	Hafnium				
7440-61-1C	Uranium, insoluble & soluble				
7440-65-5C	Yttrium, metal and compounds as Y				
7440-67-7C	Zirconium compounds, as Zr				
7440-74-6C	Indium, & compounds as In				
7446-27-7	Lead phosphate				
74-89-5	Methylamine				
74-93-1	Thiomethanol				
74-96-4	Ethyl bromide				
75-04-7	Ethylamine				
75-08-1	Ethyl mercaptan				
75-31-0	Isopropylamine				
75-47-8	Iodoform				
7572-29-4	Dichloroacetylene				
75-74-1	Tetramethyl lead, as Pb				
7580-67-8	Lithium hydride				
7616-94-6	Perchloryl fluoride				
76-22-2	Camphor, synthetic				
7631-90-5	Sodium bisulfite				
764-41-0	1,4-Dichloro-2-butene				
7646-85-7	Zinc chloride fume				
765-34-4	Glycidylaldehyde				
76737-07-2	Boron trifluoride				
7681-57-4	Sodium metabisulfite				
768-52-5	N-Isopropylaniline				
7719-09-7	Thionyl chloride				

Table C-2 Original List of Toxic Air Pollutants (669 constituents)

CAS#	Constituent	Former Class A or B TAP and Retained by WAC Update[a]	Class A or B TAPs that Appear on Other RDQO Input Lists[b]	RDQO Input Update List [c]	TWINS / BBI [d]
7719-12-2	Phosphorus trichloride				
7722-84-1	Hydrogen peroxide				
7722-88-5	Tetrasodium pyrophosphate				
7726-95-6	Bromine				
7773-06-0	Ammonium sulfamate				
77-73-6	Dicyclopentadiene				
77-78-1	Dimethyl sulfate				
7782-65-2	Germanium tetrahydride				
7783-41-7	Oxygen difluoride				
7783-54-2	Nitrogen trifluoride				
7783-60-0	Sulfur tetrafluoride				
7783-79-1	Selenium hexafluoride, as Se				
7783-80-4	Tellurium hexafluoride, as Te				
7786-34-7	Mevinphos				
7789-30-2	Bromine pentafluoride				
7790-91-2	Chlorine trifluoride				
78-00-2	Tetraethyl lead				
7803-52-3	Stibine				
7803-62-5	Silicon tetrahydride				
78-10-4	Ethyl silicate				
78-30-8	Triorthocresyl phosphate				
78-34-2	Dioxathion				
79-04-9	Chloroacetyl chloride				
79-11-8	Chloroacetic acid				
79-24-3	Nitroethane				
79-27-6	Acetylene tetrabromide				
79-41-4	Methacrylic acid				
794-93-4	Panfuran S (dihydroxymethylfuratrizine)				
8001-58-9	Creosote				

Table C-2 Original List of Toxic Air Pollutants (669 constituents)

CAS#	Constituent	Former Class A or B TAP and Retained by WAC Update[a]	Class A or B TAPs that Appear on Other RDQO Input Lists[b]	RDQO Input Update List [c]	TWINS / BBI [d]
8002-74-2	Parafin wax fume				
8003-34-7	Pyrethrum				
8006-64-2	Turpentine				
8012-95-1	Oil mist, mineral				
8022-00-2	Methyl demeton				
8030-30-6	Rubber solvent (Naphtha)				
8032-32-4	VM & P Naphtha				
8052-42-4	Asphalt (petroleum) fumes				
8065-48-3	Demeton				
81-81-2	Warfarin (>0.3%)				
81-81-2a	Warfarin (<0.3%)				
83-26-1	Pindone				
83-79-4	Rotenone				
85-00-7	Diquat				
86-50-0	Azinphos-methyl				
86-88-4	alpha-Naphthylthiourea				
89-72-5	o-sec-Butylphenol				
92-84-2	Phenothiazine				
94-36-0	Benzoyl Peroxide				
944-22-9	Fonofos				
96-33-3	Methyl acrylate				
97-77-8	Disulfiram				
98-00-1	Furfuryl alcohol				
98-01-1	Furfural				
98-07-7	Benzotrichloride				
999-61-1	2-Hydroxypropyl acrylate				
I4	Aluminum smelter polyaromatic hydrocarbon emissions				
I51	Cotton dust, raw				

Table C-2 Original List of Toxic Air Pollutants (669 constituents)

CAS#	Constituent	Former Class A or B TAP and Retained by WAC Update[a]	Class A or B TAPs that Appear on Other RDQO Input Lists[b]	RDQO Input Update List [c]	TWINS / BBI [d]
NA20	Welding fumes				
NA21	Polyaromatic hydrocarbons (PAH)				
NA23	Fibrous glass dust				
NA24	Dioxins and furans				
NA25	Coke oven emissions				
UN6	Isopropyl oils				
UN8	Nitrofurans				

Notes:

[a] Class A and B TAPS retained by WAC Update (209 constituents); See Appendix C, Section C.1 for disposition

[b] TAPs removed by WAC Update that also were input to RDQO from other lists (42 constituents); See Appendix C, Table C-3 for disposition.

[c] An "x" in the box indicates that the toxic air pollutant was identified in the updates to UTS/UHC and DST Part A constituent lists; see Appendix A, Table A-4.

[d] Compound identified in TWINS sampling with more than 10 detects or listed in BBI

[e] Note this compound does not appear on the RDQO input table B.2 although other RDQO tables list it as a TAP (See Appendix A, Table A-1).

[f] Corrected CAS number from RDQO input Table B.2.

Table C-3 Original List of Removed Toxic Air Pollutants that Appear On Other RDQO Input Lists (42 constituents)

CAS#	Constituent	Disp-osition [a]	Old WAC TAPs Prior to Update [b]		Other Inputs to the RDQO [c]					Updates to RDQO Inputs UHC/UTS DST Part A [d]		TWINS	TWINS/ BBI	Retained in RDQO (see Table A-2)	Low-Toxicity Compound (see Table A-3)	Stack Emission Compounds [f]	
			Class A TAPs	Class B TAPs	UHC	Part A-DST/ SST	UTS	DST WSPS	Flam-mable Gases	UHC/ UTS	DST Part A					EPA PIC	Site Specific PIC
108-94-1	Cyclohexanone	1		x	x	x	x			x	x		x	x			
110-86-1	Pyridine	1		x	x	x	x			x	x	x	x	x		x	
120-82-1	1,2,4-Trichlorobenzene	1		x	x		x			x			x	x		x	x
122-39-4	N,N-Diphenylamine	1		x	x		x			x				x		x	
126-98-7	2-Methyl-2-propenenitrile	1		x	x		x			x				x		x	
141-78-6	Acetic acid ethyl ester	1		x	x	x	x			x	x		x	x			
67-64-1	2-Propanone (Acetone)	1		x	x	x	x			x	x	x	x	x		x	x
71-36-3	n-Butyl alcohol	1		x	x	x	x			x	x	x	x	x			
72-20-8	Endrin	1		x	x		x			x				x			
75-69-4	Trichlorofluoromethane	1		x	x		x			x	x		x	x		x	x
75-71-8	Dichlorodifluoromethane	1		x	x		x			x				x		x	
76-13-1	1,2,2-Trichlorotrifluoroethane	1		x	x	x	x			x	x		x	x		x	
82-68-8	Pentachloronitrobenzene (PCNB)	1		x	x		x			x				x		x	
95-50-1	1,2-Dichlorobenzene	1		x	x	x	x			x	x		x	x		x	x
98-86-2	Acetophenone	1		x	x		x			x				x		x	x
98-95-3	Nitrobenzene	1		x	x	x	x			x	x		x	x		x	x
60-29-7	Ethyl ether	2		x	x	x	x			x	x		x		x		
72-43-5	Methoxychlor	2		x	x		x			x					x	x	
78-83-1	2-Methylpropyl alcohol	2		x	x	x	x			x	x		x		x		
84-66-2	Diethyl phthalate	2		x	x		x			x					x	x	x
84-74-2	Di-n-butylphthalate	2		x	x		x			x		x	x		x	x	x
93-76-5	2,4,5-T	2		x	x		x			x					x		
94-75-7	2,4-D	2	x		x		x			x					x	x	
95-95-4	2,4,5-Trichlorophenol	2		x	x	x	x			x	x		x		x	x	

Table C-3 Original List of Removed Toxic Air Pollutants that Appear On Other RDQO Input Lists (42 constituents)

CAS#	Constituent	Disp-osition [a]	Old WAC TAPs Prior to Update [b]		Other Inputs to the RDQO [c]					Updates to RDQO Inputs UHC/UTS DST Part A [d]		TWINS	TWINS/ BBI	Retained in RDQO (see Table A-2)	Low-Toxicity Compound (see Table A-3)	Stack Emission Compounds [f]	
			Class A TAPs	Class B TAPs	UHC	Part A-DST/ SST	UTS	DST WSPS	Flam-mable Gases	UHC/ UTS	DST Part A					EPA PIC	Site Specific PIC
100-02-7	4-Nitrophenol	3		x	x		x			x			x			x	x
57-12-5	Cyanide	4		x	x		x			x						x	
7440-22-4	Silver	4		x	x	x	x			x	x					x	
7440-47-3	Chromium	4		x	x		x	x	x	x	x					x	
131-11-3	Dimethyl phthalate	5		x	x		x			x						x	
51-28-5	2,4-Dinitrophenol	5		x	x		x			x						x	x
534-52-1	4,6-Dinitro-o-cresol	5		x	x		x			x						x	x
74-88-4	Iodomethane	6		x	x		x			x							x
100-01-6	4-Nitroaniline	7		x	x		x			x							
114-26-1	Propoxur	7		x	x		x			x							
126-99-8	Chloroprene	7	x		x		x			x							
1563-66-2	Carbofuran	7		x	x		x			x							
16752-77-5	Methomyl	7		x	x		x			x							
17804-35-2	Benomyl	7		x	x		x			x							
298-00-0	Methyl parathion	7		x	x		x			x							
298-02-2	Phorate	7		x	x		x			x							
56-38-2	Parathion	7		x	x		x			x							
63-25-2	Carbaryl	7		x	x		x			x							
108-94-1	Cyclohexanone	1		x	x	x	x			x	x		x	x			
110-86-1	Pyridine	1		x	x	x	x			x	x	x	x	x		x	
120-82-1	1,2,4-Trichlorobenzene	1		x	x		x			x			x	x		x	x
122-39-4	N,N-Diphenylamine	1		x	x		x			x				x		x	
126-98-7	2-Methyl-2-propenenitrile	1		x	x		x			x				x		x	
141-78-6	Acetic acid ethyl ester	1		x	x	x	x			x	x		x	x			
67-64-1	2-Propanone (Acetone)	1		x	x	x	x			x	x	x	x	x		x	x
71-36-3	n-Butyl alcohol	1		x	x	x	x			x	x	x	x	x			

Table C-3 Original List of Removed Toxic Air Pollutants that Appear On Other RDQO Input Lists (42 constituents)

			Old WAC TAPs Prior to Update [b]		Other Inputs to the RDQO [c]					Updates to RDQO Inputs UHC/UTS DST Part A [d]						Stack Emission Compounds [f]	
CAS#	Constituent	Disp-osition [a]	Class A TAPs	Class B TAPs	UHC	Part A-DST/SST	UTS	DST WSPS	Flam-mable Gases	UHC/UTS	DST Part A	TWINS	TWINS/BBI	Retained in RDQO (see Table A-2)	Low-Toxicity Compound (see Table A-3)	EPA PIC	Site Specific PIC

[a] Disposition Codes:
1 Toxic air pollutants removed by TAPs updates that were previously evaluated as other inputs to the RDQO and retained as WTP feed COPCs; no additions to the previous COPC list.
2 Low-toxicity organic compounds added by agreement with Ecology/EPA; retained as WTP feed COPCs; no additions to the previous COPC list.
3 Organic compounds added as a result of evaluation of updates to RDQO inputs (UHC/UTS, DST Part A)
4 Inorganic compounds that are addressed as individual cations or anions in the tank liquid; no additions to the previous COPC list. Note, total chromium was listed as an old TAP; the RDQO retained hexavalent chromium.
5 Compounds that appear as EPA PICs and will be measured in stack emissions (Appendix E).
6 Compounds that appear as site-specific PICs and will be measured in stack emissions (Appendix F).
7 Eliminated because they have < 10 detects in TWINS and no BBI values were found.

[b] Prior to the May 2009 update, WAC 173-460 identified two classes of TAPS, Class A and B; an "x" in the box identifies the class of the TAP.

[c] An "x' in the box indicates that the toxic air pollutant was identified as an input to the Regulatory DQO because it appears on the Underlying Hazardous Constituents (UHC) list (40 CFR 268.2(i), the Universal Treatment Standards (UTS) list (40 CFR 268), the Double Shell Tank RCRA Part A permit application (DOE-RL 1991), or the Double Shell Tank Waste Stream Profile Sheet constituents.

[d] An "x" in the box indicates that the toxic air pollutant was identified in the updates to UTS/UHC and DST Part A constituent lists; see Appendix A, Table A-4.

[e] An "x' in the box indicates that the compound either has more that 10 detects from previous tank sampling activities and is recorded in the TWINS data base or that the Best Basis Inventory (BBI) effort has identified the possibility that it was discarded to the Hanford tanks and has estimated a quantity.

[f] The stack emissions compounds were predicted to be present in combustor stack emissions (Appendix E) or has been measured by WTP in Melter research testing (Appendix F). An "x" in the box indicates the source.

Table C-4 Original List of Toxic Air Pollutants Removed by Regulation Update (418 constituents)

CAS#	Constituent	Disp-osition [a]	Old WAC Class A or B TAP [b]	Hanford Tank Organic Compounds Identification [c]		Stack Emission Compounds [d]		Table A-2 RDQO COPC [e]	Table A-3 Low-Toxicity Compound [f]	CHG Vapor Study Input [g]
				TWINS	BBI	EPA PIC	Site Spe-cific PIC			
126-73-8	Tributyl phosphate	1	B	x	x			x		x
128-37-0	2,6-Bis(tert-butyl)-4-methylphenol	1	B		x			x		x
591-78-6	2-Hexanone	1	B	x			x	x		x
60-34-4	Methylhydrazine	2	B					x		x
92-52-4	1,1`-Biphenyl	2	B			x	x	x		x
108-87-2	Methylcyclohexane	3	B			x		x		
109-99-9	Tetrahydrofuran	3	B			x		x		
123-38-6	n-Propionaldehyde	3	B			x		x		
4170-30-3	2-Butenaldehyde	3	B			x		x		
64-18-6	Formic acid	3	B			x		x		
110-83-8	Cyclohexene	4	B				x	x		
111-65-9	n-Octane	4	B				x	x		
111-84-2	n-Nonane	4	B				x	x		
100-00-5	p-Nitrochlorobenzene h	5	B					x		
106-35-4	3-Heptanone	5	B					x		
106-97-8	Butane	5	B					x		
107-87-9	2-Pentanone	5	B					x		
109-66-0	n-Pentane	5	B					x		
110-12-3	5-Methyl-2-hexanone	5	B					x		
110-43-0	2-Heptanone	5	B					x		
123-19-3	4-Heptanone	5	B					x		
123-86-4	Acetic acid n-butyl ester	5	B					x		
1321-64-8	Pentachloronaphthalene	5	B					x		
1335-87-1	Hexachloronaphthalene	5	B					x		
1335-88-2	Tetrachloronaphthalene	5	B					x		
142-82-5	n-Heptane	5	B					x		

Table C-4 Original List of Toxic Air Pollutants Removed by Regulation Update (418 constituents)

CAS#	Constituent	Disp-osition [a]	Old WAC Class A or B TAP [b]	Hanford Tank Organic Compounds Identification [c]		Stack Emission Compounds [d]		Table A-2 RDQO COPC [e]	Table A-3 Low-Toxicity Compound [f]	CHG Vapor Study Input [g]
				TWINS	BBI	EPA PIC	Site Spe-cific PIC			
144-62-7	Oxalic acid	5	B					x		
2234-13-1	Octachloronaphthalene	5	B					x		
287-92-3	Cyclopentane	5	B					x		
3825-26-1	Ammonium perfluorooctanoate	5	B					x		
563-80-4	3-Methyl-2-butanone	5	B					x		
627-13-4	Nitric acid, propyl ester	5	B					x		
64-17-5	Ethyl alcohol	5	B					x		
64-19-7	Acetic acid	5	B					x		
684-16-2	Hexafluoroacetone	5	B					x		
71-23-8	n-Propyl alcohol	5	B					x		
75-43-4	Dichlorofluoromethane	5	B					x		
75-65-0	2-Methyl-2-propanol	5	B					x		
76-14-2	1,2-Dichloro-1,1,2,2-tetrafluoroethane	5	B					x		
78-92-2	1-Methylpropyl alcohol	5	B					x		
88-89-1	Picric acid	5	B					x		
96-22-0	3-Pentanone	5	B					x		
75-50-3	Trimethylamine	6	B						x	x
132-64-9	Dibenzofuran	7	A			x	x		x	
540-84-1	2,2,4-Trimethylpentane	7	B			x			x	
74-97-5	Bromochloromethane	7	B			x	x		x	
91-22-5	Quinoline	7	B			x			x	
98-83-9	Methylstyrene	7	B			x			x	
540-59-0	1,2-Dichloroethylene	8	B				x		x	
95-49-8	o-Chlorotoluene	8	B				x		x	
101-84-8	Diphenyl ether	9	B						x	
107-18-6	2-Propen-1-ol	9	B						x	

Table C-4 Original List of Toxic Air Pollutants Removed by Regulation Update (418 constituents)

CAS#	Constituent	Disp-osition [a]	Old WAC Class A or B TAP [b]	Hanford Tank Organic Compounds Identification [c]		Stack Emission Compounds [d]		Table A-2 RDQO COPC [e]	Table A-3 Low-Toxicity Compound [f]	CHG Vapor Study Input [g]
				TWINS	BBI	EPA PIC	Site Spe-cific PIC			
107-31-3	Formic acid, methyl ester	9	B						x	
107-66-4	Dibutylphosphate	9	B						x	
108-03-2	1-Nitropropane	9	B						x	
108-20-3	Bis(isopropyl) ether	9	B						x	
108-93-0	Cyclohexanol	9	B						x	
110-62-3	n-Valeraldehyde	9	B						x	
121-69-7	Dimethylaniline	9	B						x	
123-51-3	3-Methyl-1-butanol	9	B						x	
127-19-5	N,N-Dimethylacetamide	9	B						x	
1321-65-9	Trichloronaphthalene	9	B						x	
141-79-7	4-Methyl-3-penten-2-one	9	B						x	
1582-09-8	Trifluralin	9	B						x	
25551-13-7	Trimethyl benzene	9	B						x	
26140-60-3	Terphenyls	9	B						x	
603-34-9	Triphenyl amine	9	B						x	
74-99-7	Methylacetylene	9	B						x	
75-12-7	Formamide	9	B						x	
75-52-5	Nitromethane	9	B						x	
75-55-8	2-Methylaziridine	9	B						x	
75-61-6	Difluorodibromomethane	9	B						x	
75-63-8	Trifluorobromomethane	9	B						x	
75-99-0	2,2-Dichloropropionic acid	9	B						x	
76-03-9	Trichloroacetic acid	9	B						x	
76-11-9	1,1,1,2-Tetrachloro-2,2-difluoroethane	9	B						x	
76-12-0	1,1,2,2-Tetrachloro-1,2-difluoroethane	9	B						x	
76-15-3	Chloropentafluoroethane	9	B						x	

Table C-4 Original List of Toxic Air Pollutants Removed by Regulation Update (418 constituents)

CAS#	Constituent	Disp-osition [a]	Old WAC Class A or B TAP [b]	Hanford Tank Organic Compounds Identification [c]		Stack Emission Compounds [d]		Table A-2 RDQO COPC [e]	Table A-3 Low-Toxicity Compound [f]	CHG Vapor Study Input [g]
				TWINS	BBI	EPA PIC	Site Spe-cific PIC			
79-09-4	Propanoic acid	9	B						x	
79-20-9	Methyl acetate	9	B						x	
88-72-2	Nitrotoluene	9	B						x	
92-93-3	4-Nitrobiphenyl	9	B						x	
95-13-6	Indene	9	B						x	
96-69-5	Bis(3-tert-butyl-4-hydroxy-6-methyl-phenyl) sulfide	9	B						x	
98-51-1	p-tert-Butyltoluene	9	B						x	
7429-90-5	Aluminum	10	B							
7440-16-6	Rhodium Metal	10	B							
7440-31-5	Tin, oxide & inorganic except SnH4	10	B							
7440-50-8	Copper	10	B			x				
7553-56-2	Iodine	10	B							
10025-67-9	Sulfur monochloride	11	B							
10025-87-3	Phosphorus oxychloride	11	B							
10026-13-8	Phosphorus pentachloride	11	B							
10035-10-6	Hydrogen bromide	11	B							
10102-43-9	Nitric oxide	11	B							
10210-68-1	Cobalt carbonyl as Co	11	B							
10294-33-4	Boron tribromide	11	B							
1303-86-2	Boron oxide	11	B							
1303-96-4Ca	Borates, anhydrous	11	B							
1303-96-4Cb	Borates, pentahydrate	11	B							
1303-96-4Cc	Borates, decahydrate	11	B							
1304-82-1	Bismuth telluride	11	B							
1305-62-0	Calcium hydroxide	11	B							

Table C-4 Original List of Toxic Air Pollutants Removed by Regulation Update (418 constituents)

CAS#	Constituent	Disp-osition [a]	Old WAC Class A or B TAP [b]	Hanford Tank Organic Compounds Identification [c]		Stack Emission Compounds [d]		Table A-2 RDQO COPC [e]	Table A-3 Low-Toxicity Compound [f]	CHG Vapor Study Input [g]
				TWINS	BBI	EPA PIC	Site Spe-cific PIC			
1305-78-8	Calcium oxide	11	B							
1309-37-1	Iron oxide fume, Fe2O3 as Fe	11	B							
1309-48-4	Magnesium oxide fume	11	B							
1310-58-3	Potassium hydroxide	11	B							
1314-13-2	Zinc oxide, fume	11	B							
1314-20-1	Thorium dioxide	11	A							
1314-80-3	Phosphorus pentasulfide	11	B							
1333-86-4	Carbon black	11	B							
13463-40-6	Iron pentacarbonyl, as Fe	11	B							
13494-80-9C	Tellurium & compounds as Te	11	B							
13530-65-9	Zinc chromates	11	B							
20816-12-0	Osmium tetroxide	11	B							
21351-79-1	Cesium hydroxide	11	B							
2551-62-4	Sulfur hexafluoride	11	B							
353-50-4	Carbon oxyfluoride	11	B							
3687-31-8	Lead arsenate, as Pb3 (A2O4)2	11	B							
463-58-1	Carbon oxide sulfide (COS)	11	B							
558-13-4	Carbon tetrabromide	11	B							
5714-22-7	Sulfur pentafluoride	11	B							
7429-90-5Ca	Aluminum, Al alkyls	11	B							
7429-90-5Cb	Aluminum, as AL pyro powders	11	B							
7429-90-5Cc	Aluminum, as Al soluble salts	11	B							
7429-90-5Ce	Aluminum, as Al welding fumes	11	B							
7439-89-6D	Iron salts, soluble as Fe	11	B							
7439-96-5Cb	Manganese fume	11	B							
7439-97-6Ca	Mercury, Aryl & inorganic cmpd	11	B							

Table C-4 Original List of Toxic Air Pollutants Removed by Regulation Update (418 constituents)

CAS#	Constituent	Disp-osition [a]	Old WAC Class A or B TAP [b]	Hanford Tank Organic Compounds Identification [c]		Stack Emission Compounds [d]		Table A-2 RDQO COPC [e]	Table A-3 Low-Toxicity Compound [f]	CHG Vapor Study Input [g]
				TWINS	BBI	EPA PIC	Site Spe-cific PIC			
7439-97-6Cb	Mercury, as Hg Alkyl compounds	11	B							
7439-97-6Cc	Mercury, vapors except alkyl	11	B							
7439-98-7Ca	Molybdenum, insoluble cpds	11	B							
7439-98-7Cb	Molybdenum, as Mo soluble cpds	11	B							
7440-02-0C	Nickel compounds	11	A							
7440-06-4	Platinum, metal	11	B							
7440-06-4C	Platinum, soluble salts as Pt	11	B							
7440-16-6Ca	Rhodium, insoluble compounds	11	B							
7440-16-6Cb	Rhodium, soluble compounds	11	B							
7440-22-4Da	Silver, soluble compounds as Ag	11	B							
7440-25-7C	Tantalum, metal & oxide dusts	11	B							
7440-28-0C	Thallium, soluble compounds, Tl	11	B							
7440-31-5a	Tin, metal	11	B							
7440-31-5C	Tin, organic compounds, as Sn	11	B							
7440-33-7Ca	Tungsten, insoluble compounds	11	B							
7440-33-7Cb	Tungsten, soluble compounds	11	B							
7440-36-0C	Antimony & compounds as Sb	11	B							
7440-39-3Da	Barium, soluble compounds Ba	11	B							
7440-41-7a	Beryllium powder	11	A							
7440-47-3Db	Chromium (II) compounds, as Cr	11	B							
7440-47-3Dc	Chromium (III) compounds, Cr	11	B							
7440-58-6	Hafnium	11	B							
7440-61-1C	Uranium, insoluble & soluble	11	B							
7440-65-5C	Yttrium, metal and compounds as Y	11	B							
7440-67-7C	Zirconium compounds, as Zr	11	B							
7440-74-6C	Indium, & compounds as In	11	B							

Table C-4 Original List of Toxic Air Pollutants Removed by Regulation Update (418 constituents)

CAS#	Constituent	Disp-osition [a]	Old WAC Class A or B TAP [b]	Hanford Tank Organic Compounds Identification [c]		Stack Emission Compounds [d]		Table A-2 RDQO COPC [e]	Table A-3 Low-Toxicity Compound [f]	CHG Vapor Study Input [g]
				TWINS	BBI	EPA PIC	Site Spe-cific PIC			
7446-27-7	Lead phosphate	11	A							
75-74-1	Tetramethyl lead, as Pb	11	B							
7580-67-8	Lithium hydride	11	B							
7631-90-5	Sodium bisulfite	11	B							
7646-85-7	Zinc chloride fume	11	B							
76737-07-2	Boron trifluoride	11	B							
7681-57-4	Sodium metabisulfite	11	B							
7719-09-7	Thionyl chloride	11	B							
7719-12-2	Phosphorus trichloride	11	B							
7722-84-1	Hydrogen peroxide	11	B							
7722-88-5	Tetrasodium pyrophosphate	11	B							
7726-95-6	Bromine	11	B							
7773-06-0	Ammonium sulfamate	11	B							
7782-65-2	Germanium tetrahydride	11	B							
7783-41-7	Oxygen difluoride	11	B							
7783-54-2	Nitrogen trifluoride	11	B							
7783-60-0	Sulfur tetrafluoride	11	B							
7783-79-1	Selenium hexafluoride, as Se	11	B							
7783-80-4	Tellurium hexafluoride, as Te	11	B							
7789-30-2	Bromine pentafluoride	11	B							
7790-91-2	Chlorine trifluoride	11	B							
78-00-2	Tetraethyl lead	11	B							
7803-62-5	Silicon tetrahydride	11	B							
NA20	Welding fumes	11	B							
NA23	Fibrous glass dust	11	B							
134-32-7	alpha-Naphthylamine	12	A							x

Table C-4 Original List of Toxic Air Pollutants Removed by Regulation Update (418 constituents)

CAS#	Constituent	Disp-osition [a]	Old WAC Class A or B TAP [b]	Hanford Tank Organic Compounds Identification [c]		Stack Emission Compounds [d]		Table A-2 RDQO COPC [e]	Table A-3 Low-Toxicity Compound [f]	CHG Vapor Study Input [g]
				TWINS	BBI	EPA PIC	Site Spe-cific PIC			
106-49-0	p-Toluidine	13	B			x				
106-51-4	p-Benzoquinone	13	B			x				
107-19-7	Propargyl alcohol	13	B			x				
119-90-4	3,3'-Dimethoxybenzidine	13	A			x				
460-19-5	Cyanogen	13	B			x				
506-77-4	Cyanogen chloride	13	B			x				
528-29-0	Dinitrobenzene, all isomers	13	B			x				
57-24-9	Strychnine	13	B			x				
764-41-0	1,4-Dichloro-2-butene	13	A			x				
765-34-4	Glycidylaldehyde	13	A			x				
77-78-1	Dimethyl sulfate	13	A			x				
98-01-1	Furfural	13	B			x				
98-07-7	Benzotrichloride	13	B			x				
100-37-8	Diethylaminoethanol	14	B							
100-61-8	N-Methylbenzenamine	14	B							
100-63-0	Phenylhydrazine	14	B							
100-74-3	N-Ethylmorpholine	14	B							
102-54-5	Dicyclopentadienyl iron	14	B							
102-81-8	2-N-Dibutylaminoethanol	14	B							
105-46-4	sec-Butyl acetate	14	B							
105-60-2	Caprolactam, vapor	14	B							
105-60-2a	Caprolactam, dust	14	B							
106-50-3	p-Phenylenediamine	14	B							
106-87-6	Vinyl cyclohexene dioxide	14	B							
106-92-3	Allyl glycidyl ether	14	B							
107-07-3	Ethylene chlorohydrin	14	B							

Table C-4 Original List of Toxic Air Pollutants Removed by Regulation Update (418 constituents)

CAS#	Constituent	Disp-osition [a]	Old WAC Class A or B TAP [b]	Hanford Tank Organic Compounds Identification [c]		Stack Emission Compounds [d]		Table A-2 RDQO COPC [e]	Table A-3 Low-Toxicity Compound [f]	CHG Vapor Study Input [g]
				TWINS	BBI	EPA PIC	Site Spe-cific PIC			
107-15-3	Ethylene diamine	14	B							
107-20-0	Chloroacetaldehyde	14	B							
107-41-5	Hexylene glycol	14	B							
107-49-3	Tetraethyl pyrophosphate	14	B							
108-11-2	Methyl isobutyl carbinol	14	B							
108-18-9	Diisopropylamine	14	B							
108-21-4	Isopropyl acetate	14	B							
108-24-7	Acetic anhydride	14	B							
108-43-0	Chlorophenols	14	A							
108-44-1	m-Toluidine	14	B							
108-46-3	Resorcinol (1,3-Benzenediol)	14	B							
108-83-8	Diisobutyl ketone	14	B							
108-84-9	sec-Hexyl acetate	14	B							
108-91-8	Cyclohexylamine	14	B							
108-98-5	Thiophenol	14	B							
109-59-1	Isopropoxyethanol	14	B							
109-60-4	n-Propyl acetate	14	B							
109-73-9	n-Butylamine	14	B							
109-79-5	n-Butyl mercaptan	14	B							
109-87-5	Methylal	14	B							
109-89-7	Diethylamine	14	B							
109-94-4	Ethyl formate	14	B							
110-19-0	Isobutyl acetate	14	B							
110-54-3D	Hexane, other isomers	14	B							
110-91-8	Morpholine	14	B							
111-40-0	Diethylene triamine	14	B							

Table C-4 Original List of Toxic Air Pollutants Removed by Regulation Update (418 constituents)

CAS#	Constituent	Disp-osition [a]	Old WAC Class A or B TAP [b]	Hanford Tank Organic Compounds Identification [c]		Stack Emission Compounds [d]		Table A-2 RDQO COPC [e]	Table A-3 Low-Toxicity Compound [f]	CHG Vapor Study Input [g]
				TWINS	BBI	EPA PIC	Site Spe-cific PIC			
111-46-6D	Glycol ethers	14	B							
115-29-7	Endosulfan	14	B							
115-86-6	Triphenyl phosphate	14	B							
115-90-2	Fensulfothion	14	B							
118-52-5	1,3-Dichloro-5,5-Dimethyl hydantoin	14	B							
118-96-7	2,4,6-Trinitrotoluene	14	B							
1189-85-1	tert-Butyl chromate, as CrO3	14	B							
119-93-7	3,3'-Dimethylbenzidine.	14	A							
12079-65-1	Manganese cyclopentadienyl tricarbonyl	14	B							
120-80-9	Catechol	14	B							
12108-13-3	Methylcyclopentadienylmanganese tricarbonyl	14	B							
12125-02-9	Ammonium chloride (fume)	14	B							
121-45-9	Trimethyl phosphite	14	B							
121-75-5	Malathion	14	B							
121-82-4	Cyclonite	14	B							
122-60-1	Phenyl glycidyl ether	14	B							
123-31-9	Hydroquinone	14	B							
123-42-2	Diacetone alcohol	14	B							
123-92-2	Isoamyl acetate	14	B							
124-40-3	Dimethylamine	14	B							
12604-58-9	Ferrovanadium dust	14	B							
126-85-2	Nitrogen mustard N-oxide	14	A							
1300-73-8	Xylidine	14	B							
13121-70-5	Cyhexatin	14	B							
1319-77-3a	Cresols, syn Cresylic acid	14	B							

Table C-4 Original List of Toxic Air Pollutants Removed by Regulation Update (418 constituents)

CAS#	Constituent	Disp-osition [a]	Old WAC Class A or B TAP [b]	Hanford Tank Organic Compounds Identification [c]		Stack Emission Compounds [d]		Table A-2 RDQO COPC [e]	Table A-3 Low-Toxicity Compound [f]	CHG Vapor Study Input [g]
				TWINS	BBI	EPA PIC	Site Spe-cific PIC			
1321-74-0	Divinyl benzene	14	B							
1338-23-4	Methyl ethyl ketone peroxide	14	B							
133-90-4	Chloramben	14	B							
136-78-7	Sesone	14	B							
137-05-3	Methyl-2-cyanoacrylate	14	B							
137-26-8	Thiram	14	B							
138-22-7	n-Butyl lactate	14	B							
13838-16-9	Enflurane	14	B							
1395-21-7	Subtilisins	14	B							
139-91-3	5-(Morpholinomethyl)-3-amino-2-oxazolidinone (furaltudone)	14	A							
140-88-5	Ethylacrylate	14	B							
141-32-2	Butylacrylate	14	B							
141-43-5	Ethanolamine	14	B							
141-66-2	Dicrotophos	14	B							
142-64-3	Piperazine dihydrochloride	14	B							
14484-64-1	Ferbam	14	B							
1477-55-0	m-Xylene-a,a'-diamine	14	B							
148-01-6	Dinitolamide	14	B							
14977-61-8	Chromylchloride	14	B							
150-76-5	4-Methoxyphenol	14	B							
151-67-7	Halothane	14	B							
156-62-7	Calcium cyanamide	14	B							
1615-80-1	N,N'-Diethylhydrazine	14	A							
16219-75-3	Ethylidene norbornene	14	B							
16842-03-8	Cobalt hydrocarbonyl	14	B							

Table C-4 Original List of Toxic Air Pollutants Removed by Regulation Update (418 constituents)

CAS#	Constituent	Disp-osition [a]	Old WAC Class A or B TAP [b]	Hanford Tank Organic Compounds Identification [c]		Stack Emission Compounds [d]		Table A-2 RDQO COPC [e]	Table A-3 Low-Toxicity Compound [f]	CHG Vapor Study Input [g]
				TWINS	BBI	EPA PIC	Site Spe-cific PIC			
17702-41-9	Decaborane	14	B							
1912-24-9	Atrazine	14	B							
1918-02-1	Picloram	14	B							
19287-45-7	Diborane	14	B							
1929-82-4	Nitrapyrin	14	B							
19624-22-7	Pentaborane	14	B							
2039-87-4	o-Chlorostyrene	14	B							
2104-64-5	EPN	14	B							
21087-64-9	Metribuzin	14	B							
2179-59-1	Allyl propyl disulfide	14	B							
22224-92-6	Fenamiphos	14	B							
2238-07-5	Diglycidyl ether	14	B							
2426-08-6	n-Butyl glycidyl ether	14	B							
2465-27-2	Auramine (technical grade)	14	A							
25013-15-4	Vinyl toluene	14	B							
25639-42-3	Methylcyclohexanol	14	B							
2646-17-5	Oil orange SS	14	A							
26628-22-8	Sodium azide	14	B							
26952-21-6	Iso-ocytl alcohol	14	B							
2698-41-1	o-Chlorobenylidene malonitrile	14	B							
2699-79-8	Sulfuryl fluoride	14	B							
28434-86-8	3,3'-Dichloro-4,4'-diaminodiphenyl ether	14	A							
29191-52-4	Anisidine (o-,p- isomers)	14	B							
2921-88-2	Chlorpyrifos	14	B							
2971-90-6	Clopidol	14	B							
299-84-3	Ronnel	14	B							

Table C-4 Original List of Toxic Air Pollutants Removed by Regulation Update (418 constituents)

CAS#	Constituent	Disp-osition [a]	Old WAC Class A or B TAP [b]	Hanford Tank Organic Compounds Identification [c]		Stack Emission Compounds [d]		Table A-2 RDQO COPC [e]	Table A-3 Low-Toxicity Compound [f]	CHG Vapor Study Input [g]
				TWINS	BBI	EPA PIC	Site Spe-cific PIC			
299-86-5	Crufomate	14	B							
300-76-5	Naled	14	B							
302-70-5	Nitrogen mustard N-oxide hydrochloride	14	A							
314-40-9	Bromacil	14	B							
330-54-1	Diuron	14	B							
3333-52-6	Tetramethyl succinonitrile	14	B							
334-88-3	Diazomethane	14	B							
3383-96-8	Temephos	14	B							
34590-94-8	Dipropylene glycol methyl ether	14	B							
35400-43-2	Sulprofos	14	B							
3547-04-4	DDE (p,p'-Dichlorodiphenyldichloroethylene)	14	A							
3689-24-5	Tetraethyldithiopyrophosphate (TEDP)	14	B							
4016-14-2	Isopropyl glycidyl ether (IGE)	14	B							
4098-71-9	Isophorone diisocyanate	14	B							
420-04-2	Cyanamide	14	B							
463-51-4	Ketene	14	B							
4685-14-7	Paraquat	14	B							
479-45-8	Tetryl	14	B							
504-29-0	2-Aminopyridine	14	B							
509-14-8	Tetranitromethane	14	B							
5124-30-1	Methylene-bis-(4-cyclo-hexylisocyanate)	14	B							
540-88-5	tert-Butyl acetate	14	B							
54-11-5	Nicotine	14	B							
541-85-5	Ethyl amyl ketone	14	B							
542-92-7	Cyclopentadiene	14	B							
552-30-7	Trimellitic anhydride	14	B							

Table C-4 Original List of Toxic Air Pollutants Removed by Regulation Update (418 constituents)

CAS#	Constituent	Disp-osition [a]	Old WAC Class A or B TAP [b]	Hanford Tank Organic Compounds Identification [c]		Stack Emission Compounds [d]		Table A-2 RDQO COPC [e]	Table A-3 Low-Toxicity Compound [f]	CHG Vapor Study Input [g]
				TWINS	BBI	EPA PIC	Site Spe-cific PIC			
55-38-9	Fenthion	14	B							
555-84-9	1-(5-Nitrofurfurylidene)amino)-2-imidazolidinone	14	A							
55-63-0	Nitroglycerin	14	B							
556-52-5	Glycidol	14	B							
55720-99-5	Chlorinated diphenyl oxide	14	B							
563-12-2	Ethion	14	B							
583-60-8	o-Methylcyclohexanone	14	B							
592-62-1	Methyl azoxymethyl acetate	14	A							
59355-75-8	Methyl acetylene-propadiene mixture (MAPP)	14	B							
594-42-3	Perchloromethyl mercaptan	14	B							
594-72-9	1,1-Dichloro-1-nitroethane	14	B							
600-25-9	1-Chloro-1-nitropropane	14	B							
613-35-4	N,N-Diacetylbenzidine	14	A							
626-17-5	m-Phthalodinitrile	14	B							
626-38-0	sec-Amyl acetate	14	B							
62-74-8	Fluoroacetic acid, sodium salt (Fratol)	14	B							
628-63-7	n-Amyl acetate	14	B							
628-96-6	Ethylene glycol dinitrate	14	B							
638-21-1	Phenylphosphine	14	B							
64091-91-4	4-(Methylnitrosamino)-1-(3-pyridyl)-1-butanone	14	A							
64-67-5	Diethyl sulfate	14	B							
67-45-8	Furazolidone	14	A							
680-31-9	Hexamethylphosphoramide	14	A							
68-11-1	Thioglycolic acid	14	B							

Table C-4 Original List of Toxic Air Pollutants Removed by Regulation Update (418 constituents)

CAS#	Constituent	Disp-osition [a]	Old WAC Class A or B TAP [b]	Hanford Tank Organic Compounds Identification [c]		Stack Emission Compounds [d]		Table A-2 RDQO COPC [e]	Table A-3 Low-Toxicity Compound [f]	CHG Vapor Study Input [g]
				TWINS	BBI	EPA PIC	Site Spe-cific PIC			
681-84-5	Methyl silicate	14	B							
68476-85-7	Liquified petroleum gas	14	B							
6923-22-4	Monocrotophos	14	B							
696-28-6	Dichlorophenylarsine	14	A							
74-89-5	Methylamine	14	B							
74-93-1	Thiomethanol	14	B							
74-96-4	Ethyl bromide	14	B							
75-04-7	Ethylamine	14	B							
75-08-1	Ethyl mercaptan	14	B							
75-31-0	Isopropylamine	14	B							
75-47-8	Iodoform	14	B							
7572-29-4	Dichloroacetylene	14	B							
7616-94-6	Perchloryl fluoride	14	B							
76-22-2	Camphor, synthetic	14	B							
768-52-5	N-Isopropylaniline	14	B							
77-73-6	Dicyclopentadiene	14	B							
7786-34-7	Mevinphos	14	B							
7803-52-3	Stibine	14	B							
78-10-4	Ethyl silicate	14	B							
78-30-8	Triorthocresyl phosphate	14	B							
78-34-2	Dioxathion	14	B							
79-04-9	Chloroacetyl chloride	14	B							
79-11-8	Chloroacetic acid	14	B							
79-24-3	Nitroethane	14	B							
79-27-6	Acetylene tetrabromide	14	B							
79-41-4	Methacrylic acid	14	B							

Table C-4 Original List of Toxic Air Pollutants Removed by Regulation Update (418 constituents)

CAS#	Constituent	Disp-osition [a]	Old WAC Class A or B TAP [b]	Hanford Tank Organic Compounds Identification [c]		Stack Emission Compounds [d]		Table A-2 RDQO COPC [e]	Table A-3 Low-Toxicity Compound [f]	CHG Vapor Study Input [g]
				TWINS	BBI	EPA PIC	Site Spe-cific PIC			
794-93-4	Panfuran S (dihydroxymethylfuratrizine)	14	A							
8001-58-9	Creosote	14	A							
8002-74-2	Parafin wax fume	14	B							
8003-34-7	Pyrethrum	14	B							
8006-64-2	Turpentine	14	B							
8012-95-1	Oil mist, mineral	14	B							
8022-00-2	Methyl demeton	14	B							
8030-30-6	Rubber solvent (Naphtha)	14	B							
8032-32-4	VM & P Naphtha	14	B							
8052-42-4	Asphalt (petroleum) fumes	14	B							
8065-48-3	Demeton	14	B							
81-81-2	Warfarin (>0.3%)	14	B							
81-81-2a	Warfarin (<0.3%)	14	B							
83-26-1	Pindone	14	B							
83-79-4	Rotenone	14	B							
85-00-7	Diquat	14	B							
86-50-0	Azinphos-methyl	14	B							
86-88-4	alpha-Naphthylthiourea	14	B							
89-72-5	o-sec-Butylphenol	14	B							
92-84-2	Phenothiazine	14	B							
94-36-0	Benzoyl Peroxide	14	B							
944-22-9	Fonofos	14	B							
96-33-3	Methyl acrylate	14	B							
97-77-8	Disulfiram	14	B							
98-00-1	Furfuryl alcohol	14	B							
999-61-1	2-Hydroxypropyl acrylate	14	B							

Table C-4 Original List of Toxic Air Pollutants Removed by Regulation Update (418 constituents)

CAS#	Constituent	Disp-osition [a]	Old WAC Class A or B TAP [b]	Hanford Tank Organic Compounds Identification [c]		Stack Emission Compounds [d]		Table A-2 RDQO COPC [e]	Table A-3 Low-Toxicity Compound [f]	CHG Vapor Study Input [g]
				TWINS	BBI	EPA PIC	Site Spe-cific PIC			
I4	Aluminum smelter polyaromatic hydrocarbon emissions	14	A							
I51	Cotton dust, raw	14	B							
NA21	Polyaromatic hydrocarbons (PAH)	14	A							
NA24	Dioxins and furans	14	A							
NA25	Coke oven emissions	14	A							
UN6	Isopropyl oils	14	A							
UN8	Nitrofurans	14	A							

[a] Disposition

1 RDQO identified WTP feed COPCs; removed by the revision to the TAPs list; retained as WTP feed COPCs because they are found in TWINS/BBI.

2 RDQO identified WTP feed COPCs; removed by the revision to the TAPs list; retained as WTP feed COPCs because they were idenitfied in the CHG vapor study (Table B-1); not found in TWINS/BBI.

3 Constituents removed from the RDQO starting list to be measured in stack emissions because they appear as EPA PICs (Appendix E).

4 Constituents removed from the RDQO starting list to be measured in stack emissions because they appear as site-specific PICs (Appendix F).

5 Constituents removed from the RDQO starting list because they no longer have a regulatory driver and are not found in TWINS/BBI.

6 Low-toxicity compound removed by the revision to the TAPs list; retained as WTP feed COPCs because it was idenitfied in the CHG vapor study (Appendix B, Table B-1).

7 Constituents removed from the low-toxicity list to be measured in stack emissions because they appear as EPA PICs (Appendix E).

8 Constituent removed from the low-toxicity list to be measured in stack emissions because it appears as a site-specific PIC (Appendix F).

9 Constituents removed from the low-toxicity list because they no longer have a regulatory driver and are not found in TWINS/BBI.

10 Inorganics initially identified as feed COPCs in the RDQO; retained without further evaluation.

11 Inorganic compounds that are addressed as individual cations or anions in the tank liquid; no further evaluation was performed.

12 Eliminated because it has < 10 detects in TWINS and no BBI values were found; appears as CHG vapor study compound (Appendix B) therefore, retained as feed COPC.

13 Eliminated because they have < 10 detects in TWINS and no BBI values were found; appear as EPA PICs (Appendix E).

14 Eliminated because they have < 10 detects in TWINS and no BBI values were found.

[b] A notation in the box identifies the compound as a TAP listed prior to the May 2009 WAC 173-460 update; the "A" or "B" indicates the class of the TAP.

[c] An "x" in the box indicates that the compound either has more that 10 detects from previous tank sampling activities and is recorded in the TWINS data base or that the Best Basis Inventory (BBI) effort has identified the possibility that it was discarded to the Hanford tanks and has estimated a quantity.

[d] The stack emissions compounds were predicted to be present in combustor stack emissions (Appendix E).

Table C-4 Original List of Toxic Air Pollutants Removed by Regulation Update (418 constituents)

CAS#	Constituent	Disp-osition [a]	Old WAC Class A or B TAP [b]	Hanford Tank Organic Compounds Identification [c]		Stack Emission Compounds [d]		Table A-2 RDQO COPC [e]	Table A-3 Low-Toxicity Compound [f]	CHG Vapor Study Input [g]
				TWINS	BBI	EPA PIC	Site Spe-cific PIC			

[e] Compound was selected by RDQO process as a feed COPC (Appendix A, Table A-2).
[f] Compound was identified as a low toxicity COPC per agreement with Ecology (Appendix A, Table A-3).
[g] Compound was identified in the CHG vapor study, Appendix B, Table B-1.
[h] This compound does not appear on the RDQO input table B.2 although other RDQO tables list it as a TAP.

Appendix D

RDQO Optimization Study Revisions to the WTP COPCs

Appendix D
RDQO Optimization Study Revisions to the WTP COPCs

The RDQO (Wiemers and others 1998) required that the COPC analyte selection and analytical methods be optimized. The optimization effort is documented in the *Regulatory Data Quality Objectives Optimization Report* (BNI 2004). This optimization process adjusted the starting list of RDQO organic and inorganic COPCs.

D.1 RDQO Optimization Study Adjustments to the WTP Waste Feed COPCs

In accordance with the RDQO (Wiemers and others 1998), the U. S. Department of Energy (DOE) and the Washington State Department of Ecology (Ecology), with input from Bechtel National, Inc. (BNI), initiated activities to optimize the RDQO. The results of these activities that relate to Hanford Tank waste COPC identification are documented in the *Regulatory Data Quality Objectives Optimization Report* (BNI 2004, Tables 4-1, 4-2, 4-3, and 4-4).

The RDQO optimization adjustments include (refer to Table D-1 for disposition codes):

- Substitution of seven aroclors for total PCBs (disposition 1). Note, two of the added aroclors were previously added by the CHG vapor study (Appendix B).
- Removed five inorganic COPCs that have no regulatory driver (disposition 2).
- Removed one inorganic COPC that has no suitable analytical method for the waste matrices (disposition 3).
- Removed three organic COPCs that are highly reactive (disposition 4). Note, two of the organic COPCs were removed during the evaluation of the WAC 173-460 revisions to the toxic air pollutants (Appendix C), leaving one removed by the Optimization Study.
- Removed four organics that lack analytical methods in the waste matrices (disposition 5). Note, one of the organic COPCs was removed during the evaluation of the WAC 173-460 revisions to the toxic air pollutants (Appendix C), leaving three removed by the Optimization Study.

In addition to the adjustments described above, the following substitutions were made to facilitate characterization of the tank waste:

- Hydroxide was replaced with pH measurement (disposition 6).
- The analysis for total chromium was substituted for hexavalent chromium (disposition 7).
- The analysis for thermodynamically stable sulfur was substituted for sulfur (disposition 8).
- The analysis for the nitrate ion was substituted for nitric acid (disposition 9).
- The nitrate ion analysis will also substitute for the nitrous oxide analysis (CAS Number 10024-97-2) identified in the CHG vapor study (Appendix B).

These adjustments, are displayed in Table D-1. Additional discussion of the optimization study adjustments is provided in BNI 2004.

D.2 References

BNI 2004. *Regulatory Data Quality Objectives Optimization Report,* 24590-WTP-RPT-MGT-04-001, Rev 0, February 5, 2004, Bechtel National, Inc., Richland, Washington.

CHG 2004. JO Honeyman, JE Meacham, RJ Cash, AM Sastry. CH2M HILL Hanford Group, Inc. JL Huckaby, Pacific Northwest National Laboratory, *Industrial Hygiene Chemical Vapor Technical Basis*, RPP-22491, October 2004, Richland, Washington.

Table D-1 Adjustments Made by the Regulatory Data Quality Objectives Optimization Process

CAS#	Constituent	Adjustment Code [a]	
		Removed	Added
Organics			
11096-82-5	Aroclor-1260		1
11097-69-1	Aroclor-1254		1
11104-28-2	Aroclor-1221		1
11141-16-5	Aroclor-1232		1
12672-29-6	Aroclor-1248		1
12674-11-2	Aroclor-1016		1
53469-21-9	Aroclor-1242		1
1336-36-3	Polychlorinated biphenyls (PCBs)	1	
121-44-8	Triethylamine	5	
3825-26-1	Ammonium perfluorooctanoate [b]	4	
57-14-7	1,1-Dimethylhydrazine	5	
60-34-4	Methylhydrazine	5	
624-83-9	Methyl isocyanate [c]	4	
684-16-2	Hexafluoroacetone [b]	5	
88-89-1	Picric acid [b]	4	
Inorganics			
7440-09-7	Potassium	2	
7440-21-3	Silicon	2	
7440-42-8	Boron	2	
7440-69-9	Bismuth	2	
7440-70-2	Calcium	2	
7553-56-2	Iodine	3	
14280-30-9	Hydroxide	6	
no CAS #	pH		6
18540-29-9	Hexavalent chromium	7	
7440-47-3	Chromium		7
63705-05-5	Sulfur	8	
7704-34-9	Total Sulfur (thermodynamically stable)		8
7697-37-2	Nitrate (Nitric acid)	9	
14797-55-8	Nitrate		9
7440-09-7	Potassium	2	
7440-21-3	Silicon	2	

[a] Adjustment Code:

1 Aroclors substituted for total PCBs; see BNI (2004), Table 4-2.
2 Inorganics removed; no regulatory driver; see BNI (2004), Table 4-2.
3 Inorganic removed; no suitable methods in waste matrices; see BNI (2004), Table 4-2.
4 Organics removed because they are highly reactive; see BNI (2004), Table 4-2.
5 Organics removed because there are no suitable analytical methods for the waste matrices; see BNI (2004), Table 4-2.
6 pH measurement substituted for hydroxide; see BNI (2004), Table 4-2.
7 Analysis for total chromium substituted for hexavalent chromium; see BNI (2004), Table 4-4.
8 Thermodynamically stable sulfur substituted for total sulfur; see BNI (2004), Table 4-4.

Table D-1 Adjustments Made by the Regulatory Data Quality Objectives Optimization Process

CAS#	Constituent	Adjustment Code [a]	
		Removed	Added

9 Nitrate ion substituted for nitric acid; see BNI (2004), Table 4-4.

[b] Previously removed by TAPs revision evaluation.
[c] Moved to EPA PIC.

Appendix E

Products of Incomplete Combustion COPCs Identified in the HHRAP

Appendix E
Products of Incomplete Combustion COPCs Identified in the HHRAP

To help ensure the full range of compounds potentially emitted from a combustor are considered, the US Environmental Protection Agency (EPA), in the *Human Health Risk Assessment Protocol for Hazardous Waste Combustion Facilities* (HHRAP) (EPA 1998) provided a list of compounds typically found in hazardous waste and stack gas emissions from hazardous waste combustion (Appendix A-1, EPA 1998). The products of incomplete combustion (PIC) selected as WTP PICs are those 242 compounds identified in the HHRAP, Table A-1, Columns 6, 7, and 8 (EPA 1998). Table E-1 reproduces this list.

A second category of PICs identified is coplanar polychlorinated biphenyls (PCBs), moderately chlorinated PCB congeners that can have dioxin-like effects. The latest revision of the *Human Health Risk Assessment Protocol for Hazardous Waste Combustion Facilities* (HHRAP) (Table 2-5, EPA 2005) identifies 12 coplanar PCBs. Table E-1 lists the 12 coplanar PCBs.

Of the 242 PICs listed in Table E-1 (Columns 3 - 6), (EPA 1998) and 12 coplanar PCBs (Column 7) listed in Table 2-5, (EPA 2005), 126 are potentially in the WTP waste feed or already identified as a compound to be measured in stack emissions. Table E-1 identifies the WTP potential waste feed or other previously identified stack emission COPCs (Column 8). The remaining 128 EPA PIC compounds (column 9) are identified as WTP COPCs from the EPA PIC list and measured in WTP stack emissions only.

Note, the inorganic hexavalent chromium, CAS No. 18540-29-9, and the organics total PCBs, CAS 1336-36-3 and methyl isocyanate; CAS No. 624-83-9 were removed as feed constituents by the RDQO Optimization Study (Appendix D). These compounds appear on the EPA PIC list and were retained as stack emissions compounds. Later in the COPC evaluation process, a further adjustment was made to move total PCBs to a feed COPC and to remove hexavalent chromium as a stack emission compound; hexavalent chromium was replaced by total chromium as a WTP feed COPC. Note that the redesignation of total PCBs to a feed COPC and the elimination of hexavalent chromium as a stack emission compound in favor of total chromium (a feed constituent) is not shown in the table.

Of the 128 constituents identified as EPA PICs, 93 of them (29 dioxins, furans, and PCBs, 38 TAPs that did not meet the criteria for listing as feed COPCs, and 26 former TAPs) were previously identified as stack emissions compounds in the TAPs revision evaluation (Appendix C). Twelve PICs had previously been discounted as feed COPCs (Appendix A, Table A-4, disposition 6). The remaining 19 organic PICs were not previously evaluated in the examination of feed COPCs. With the inclusion of total PCBs and methyl isocyanate, there were 126 organics considered for evaluation as COPCs that are PICs. Subsequent agreements with Ecology and EPA (Appendix G) made additional modifications to the EPA PIC list resulting in 139 constituents identified as EPA PICs.

References:

EPA 1998. *Human Health Risk Assessment Protocol for Hazardous Waste Combustion Facilities*, Peer Review Draft, EPA/530/D-98/001A, July 1998, US Environmental Protection Agency, Washington, DC.

EPA 2005. *Human Health Risk Assessment Protocol for Hazardous Waste Combustion Facilities*, Final, EPA/530/R-05/006, September 2005, US Environmental Protection Agency, Washington, DC. Available at http://www.epa.gov/epaoswer/hazwaste/combust/risk.htm.

Table E-1 US Environmental Protection Agency Products of Incomplete Combustion

CAS #	Compound Name	Historical EPA PICs: Table A-1 [HHRAP (EPA 1998)]				Coplanar PCBs Table 2-5 HHRAP (EPA 2005) [a]	Already assigned as COPC	Added to WTP COPCs as EPA PICs [b]
		EPA Compounds Identified in Combustion Unit Emissions	EPA Recommended and Potential PICs	PICs in Stack Emission Actually Detected	EPA Identified PIC			
100-01-6	4-Nitroaniline (p-nitroaniline)							
100-02-7	4-Nitrophenol (p-nitrophenol)		x		x		x	
100-25-4	1,4-Dinitrobenzene (p-dinitrobenzene)		x		x		x	
100-41-4	Ethylbenzene	x	x	x	x		x	
100-42-5	Styrene	x	x		x		x	
100-44-7	Benzyl chloride	x	x		x			x
100-51-6	Benzyl alcohol							
100-52-7	Benzaldehyde	x	x	x	x			x
100-75-4	N-Nitrosopiperidine							
10102-43-9	Nitric oxide							
10102-44-0	Nitrogen dioxide			x	x		x	
10102-45-1	Thallium(I)nitrate							
101-05-3	Anilazine							
101-14-4	4,4'-Methylenebis (2-chloroaniline)							
101-27-9	Barban							
101-55-3	4-Bromophenyl phenyl ether							
101-61-1	4,4'-Methylenebis (N,N-dimethylaniline)							
101-68-8	Methylene diphenyl diisocyanate (MDI)							
101-77-9	4,4-Methylenedianiline		x		x			x
101-80-4	4,4'-Oxydianiline							
1024-57-3	Heptachlor epoxide							
102-82-9	Tributylamine							
1031-07-8	Endosulfan sulfate							
103-33-3	Azobenzene	x	x		x			x

Table E-1 US Environmental Protection Agency Products of Incomplete Combustion

CAS #	Compound Name	Historical EPA PICs: Table A-1 [HHRAP (EPA 1998)]				Coplanar PCBs Table 2-5 HHRAP (EPA 2005) [a]	Already assigned as COPC	Added to WTP COPCs as EPA PICs [b]
		EPA Compounds Identified in Combustion Unit Emissions	EPA Recommended and Potential PICs	PICs in Stack Emission Actually Detected	EPA Identified PIC			
103-85-5	Phenylthiourea							
105-60-2	Caprolactam							
105-67-9	2,4-Dimethylphenol		x	x	x			x
10595-95-6	N-Nitrosomethylethylamine							
106-42-3	p-Xylene (dimethyl benzene)	x	x	x	x		x	
106-44-5	p-Cresol (4-methyl phenol)		x		x			x
106-46-7	1,4-Dichlorobenzene	x	x	x	x		x	
106-47-8	p-Chloroaniline		x		x			x
106-49-0	p-Toluidine		x		x			x
106-50-3	p-Phenylenediamine							
106-51-4	Quinone		x		x			x
106-88-7	1,2-Epoxybutane							
106-89-8	Epichlorohydrin (1-chloro-2,3 epoxypropane)		x		x			x
106-93-4	Ethylene dibromide		x		x		x	
106-99-0	1,3-Butadiene	x	x		x		x	
107-02-8	Acrolein		x		x		x	
107-05-1	Allyl chloride							
107-06-2	1,2-Dichloroethane (ethylene dichloride)	x	x	x	x		x	
107-07-3	2-Chloroethanol							
107-10-8	n-Propylamine							
107-12-0	Propionitrile							
107-13-1	Acrylonitrile	x	x		x		x	
107-18-6	Allyl alcohol							
107-19-7	Propargyl alcohol		x		x			x
107-20-0	Chloroacetaldehyde							

Table E-1 US Environmental Protection Agency Products of Incomplete Combustion

CAS #	Compound Name	Historical EPA PICs: Table A-1 [HHRAP (EPA 1998)]				Coplanar PCBs Table 2-5 HHRAP (EPA 2005) [a]	Already assigned as COPC	Added to WTP COPCs as EPA PICs [b]
		EPA Compounds Identified in Combustion Unit Emissions	EPA Recommended and Potential PICs	PICs in Stack Emission Actually Detected	EPA Identified PIC			
107-21-1	Ethylene glycol (1,2-ethanediol)		x		x			x
107-30-2	Chloromethyl methyl ether							
107-49-3	Tetraethyl pyrophosphate							
107-98-2	Propylene glycol monomethyl ether		x		x			x
108-05-4	Vinyl acetate		x		x		x	
108-10-1	Methyl isobutyl ketone		x	x	x		x	
108-18-9	Diisopropylamine							
108-31-6	Maleic anhydride							
108-38-3	m-Xylene (dimethyl benzene)	x	x	x	x		x	
108-39-4	m-Cresol		x		x		x	
108-46-3	Resorcinol							
108-60-1	bis (2-Chloroisopropyl)ether		x		x			x
108-67-8	1,3,5-Trimethylbenzene			x	x			x
108-87-2	Methylcyclohexane		x		x			x
108-88-3	Toluene	x	x	x	x		x	
108-90-7	Chlorobenzene	x	x	x	x		x	
108-95-2	Phenol	x	x	x	x		x	
108-98-5	Thiophenol (benzenethiol)							
109-06-8	2-Picoline							
109-77-3	Malononitrile		x		x			x
109-86-4	2-Methoxyethanol		x		x			x
109-89-7	Diethylamine							
109-99-9	Tetrahydrofuran			x	x			x
110-54-3	n-Hexane		x		x		x	
110-75-8	2-Chloroethylvinyl ether							

Table E-1 US Environmental Protection Agency Products of Incomplete Combustion

CAS #	Compound Name	Historical EPA PICs: Table A-1 [HHRAP (EPA 1998)]				Coplanar PCBs Table 2-5 HHRAP (EPA 2005) [a]	Already assigned as COPC	Added to WTP COPCs as EPA PICs [b]
		EPA Compounds Identified in Combustion Unit Emissions	EPA Recommended and Potential PICs	PICs in Stack Emission Actually Detected	EPA Identified PIC			
110-80-5	Ethylene glycol monoethyl ether		x		x		x	
110-86-1	Pyridine		x		x		x	
11096-82-5	Aroclor-1260							
11097-69-1	Aroclor-1254							
11104-28-2	Aroclor-1221							
111-15-9	Ethylene glycol monoethyl ether acetate		x		x			x
11141-16-5	Aroclor-1232							
111-42-2	Diethanolamine							
111-44-4	bis(2-Chloroethyl)ether	x	x		x			x
111-54-6	Ethylene(bis)dithiocarbamic acid							
1116-54-7	N-Nitrosodiethanolamine							
111-76-2	Ethylene glycol monobutyl ether		x		x		x	
111-91-1	bis(2-Chloroethoxy)methane	x	x		x			x
1120-71-4	1,3-Propane sultone		x		x			x
114-26-1	Propoxur (Bayton)							
115-02-6	Azaserine							
115-29-7	Endosulfan							
115-90-2	Fensulfothion							
116-06-3	Aldicarb							
117-79-3	2-Aminoanthraquinone							
117-80-6	Dichlone							
117-81-7	bis(2-ethylhexyl)phthalate	x	x	x	x		x	
117-84-0	Di-n-octylphthalate		x		x		x	
118-74-1	Hexachlorobenzene (perchlorobenzene)	x	x	x	x		x	
118-96-7	2,4,6-Trinitrotoluene							

Table E-1 US Environmental Protection Agency Products of Incomplete Combustion

CAS #	Compound Name	Historical EPA PICs: Table A-1 [HHRAP (EPA 1998)]				Coplanar PCBs Table 2-5 HHRAP (EPA 2005) [a]	Already assigned as COPC	Added to WTP COPCs as EPA PICs [b]
		EPA Compounds Identified in Combustion Unit Emissions	EPA Recommended and Potential PICs	PICs in Stack Emission Actually Detected	EPA Identified PIC			
119-90-4	3,3'-Dimethoxybenzidine		x		x			x
119-93-7	3,3'-Dimethylbenzidine							
120-12-7	Anthracene	x	x		x		x	
12039-52-0	Thallium(I)selenite							
120-58-1	Isosafrole							
120-62-7	Piperonyl sulfoxide							
120-71-8	p-Cresidine							
120-80-9	Catechol							
120-82-1	1,2,4-Trichlorobenzene	x	x	x	x		x	
120-83-2	2,4-Dichlorophenol	x	x		x		x	
121-14-2	2,4-Dinitrotoluene		x		x		x	
121-44-8	Triethylamine							
121-69-7	N,N-Diethyl aniline							
121-75-5	Malathion							
122-09-8	a,a-Dimethylphenethylamine							
122-39-4	Diphenylamine		x		x		x	
122-66-7	1,2-Diphenylhydrazine		x		x			x
123-31-9	Hydroquinone							
123-33-1	Maleic hydrazide		x		x			x
123-38-6	Propionaldehyde		x		x			x
123-63-7	Paraldehyde							
123-91-1	Dioxane (1,4-dioxane)	x	x		x		x	
124-48-1	Chlorodibromomethane			x	x			x
126-68-1	0,0,0-Triethyl phosphorothioate							
12672-29-6	Aroclor-1248							

Table E-1 US Environmental Protection Agency Products of Incomplete Combustion

CAS #	Compound Name	Historical EPA PICs: Table A-1 [HHRAP (EPA 1998)]				Coplanar PCBs Table 2-5 HHRAP (EPA 2005) [a]	Already assigned as COPC	Added to WTP COPCs as EPA PICs [b]
		EPA Compounds Identified in Combustion Unit Emissions	EPA Recommended and Potential PICs	PICs in Stack Emission Actually Detected	EPA Identified PIC			
126-72-7	tris(2,3-Dibromopropyl) phosphate							
12674-11-2	Aroclor-1016							
126-75-0	Demeton-S							
126-98-7	Methacrylonitrile		x		x		x	
126-99-8	Chloroprene							
127-18-4	Tetrachloroethene (Perchloroethylene)	x	x	x	x		x	
129-00-0	Pyrene	x		x	x		x	
130-15-4	1,4-Naphthoquinone							
1303-28-2	Arsenic pentoxide							
13071-79-9	Terbufos							
131-11-3	Dimethyl Phthalate	x	x		x			x
1314-32-5	Thallic oxide							
1314-62-1	Vanadium pentoxide							
13171-21-6	Phosphamidon							
131-89-5	2-Cycloyhexyl-4,6-dinitrophenol		x		x			x
1319-77-3	Cresols/cresylic acid (isomers and mixtures)							
132-32-1	3-Amino-9-ethylcarbazole							
132-64-9	Dibenzofuran	x			x			x
1327-53-3	Arsenic trioxide							
1330-20-7	Xylene (total)	x		x	x [1]		x	
133-06-2	Captan	x			x			x
1332-21-4	Asbestos							
1335-32-6	Lead subacetate							
1336-36-3	Polychlorinated biphenyls (209 congeners)	x	x	x	x [1]			x
1338-23-4	2-Butanone peroxide							

Table E-1 US Environmental Protection Agency Products of Incomplete Combustion

CAS #	Compound Name	Historical EPA PICs: Table A-1 [HHRAP (EPA 1998)]				Coplanar PCBs Table 2-5 HHRAP (EPA 2005) [a]	Already assigned as COPC	Added to WTP COPCs as EPA PICs [b]
		EPA Compounds Identified in Combustion Unit Emissions	EPA Recommended and Potential PICs	PICs in Stack Emission Actually Detected	EPA Identified PIC			
133-90-4	Chloramben							
134-32-7	1-Naphthylamine (alpha-naphthylamine)							
13463-39-3	Nickel carbonyl							
137-17-7	2,4,5-Trimethylaniline							
137-26-8	Thiram							
13765-19-0	Calcium chromate							
140-57-8	Aramite							
140-88-5	Ethyl acrylate							
141-66-2	Dicrotophos							
143-33-9	Sodium cyanide							
143-50-0	Kepone							
145-73-3	Endothall		x		x			x
1464-53-5	1,2,3,4-Diepoxybutane							
148-82-3	Melphalan							
151-50-8	Potassium cyanide							
151-56-4	Ethylene imine (Aziridine)							
152-16-9	Octamethyl pyrophosphoramide							
1563-66-2	Carbofuran							
156-60-5	(trans)1,2-Dichloroethene		x		x		x	
156-62-7	Calcium cyanamide							
1582-09-8	Trifluralin							
1615-80-1	N,N'-Diethylhydrazine							
1634-04-4	Methyl tert butyl ether		x		x		x	
16752-77-5	Methomyl							
1718-51-0	Terphenyl-d14							

Table E-1 US Environmental Protection Agency Products of Incomplete Combustion

CAS #	Compound Name	Historical EPA PICs: Table A-1 [HHRAP (EPA 1998)]				Coplanar PCBs Table 2-5 HHRAP (EPA 2005) [a]	Already assigned as COPC	Added to WTP COPCs as EPA PICs [b]
		EPA Compounds Identified in Combustion Unit Emissions	EPA Recommended and Potential PICs	PICs in Stack Emission Actually Detected	EPA Identified PIC			
1746-01-6	2,3,7,8-Tetrachlorodibenzo(p)dioxin (TCDD)	x	x	x	x			x
1836-75-5	Nitrofen							
18540-29-9	Chromium (hexavalent)	x		x	x [3]			x
18883-66-4	Streptozotocin							
1888-71-7	Hexachloropropene							
189-55-9	Dibenzo(a,i)pyrene							
191-24-2	Benzo(g,h,i)perylene	x	x		x		x	
192-65-4	Dibenzo(a,e)pyrene							
192-97-2	Benzo(e)pyrene		x		x			x
193-39-5	Indeno(1,2,3-cd)pyrene		x		x		x	
19408-74-3	1,2,3,7,8,9-Hexachlorodibenzo(p)dioxin	x	x		x			x
2037-26-5	Toluene-d8							
205-82-3	Benzo(j)fluoranthene	x	x		x		x	
205-99-2	Benzo(b)fluoranthene (3,4-Benzofluoranthene)	x	x		x		x	
206-44-0	Fluoranthene	x	x	x	x		x	
207-08-9	Benzo(k)fluoranthene	x	x		x		x	
20816-12-0	Osmium tetroxide							
20830-81-3	Daunomycin							
20859-73-8	Aluminum phosphide							
208-96-8	Acenaphthalene							
2104-64-5	EPN							
21609-90-5	Leptophos							
218-01-9	Chrysene	x	x		x		x	
224-42-0	Dibenz(a,j)acridine							
225-51-4	Benz[c]acridine							

Table E-1 US Environmental Protection Agency Products of Incomplete Combustion

CAS #	Compound Name	Historical EPA PICs: Table A-1 [HHRAP (EPA 1998)]				Coplanar PCBs Table 2-5 HHRAP (EPA 2005) [a]	Already assigned as COPC	Added to WTP COPCs as EPA PICs [b]
		EPA Compounds Identified in Combustion Unit Emissions	EPA Recommended and Potential PICs	PICs in Stack Emission Actually Detected	EPA Identified PIC			
22967-92-6	Methyl mercury	x	x		x			x
2303-16-4	Diallate (cis or trans)							
2310-17-0	Phosalone							
2385-85-5	Mirex							
23950-58-5	Pronamide		x		x			x
2425-06-1	Captafol							
25013-15-4	Methyl styrene							
25265-76-3	Phenylenediamine							
25376-45-8	Toluenediamine							
26471-62-5	Toluene diisocyanate							
2763-96-4	5-(Aminomethyl)-3-isoxazolol							
2921-88-5	Chlorpyrifos X							
297-97-2	O,O-Diethyl O-pyrazinyl phosphorothioate (Thionazine)							
298-00-0	Methyl parathion							
298-02-2	Phorate							
298-03-3	Demeton-O							
298-04-4	Disulfoton							
29812-79-1	O-Decyl hydroxylamine							
299-84-3	Ronnel							
300-76-5	Naled							
302-01-2	Hydrazine							
302-17-0	Chloral hydrate							
303-34-1	Lasiocarpine							
305-03-3	Chlorambucil							

Table E-1 US Environmental Protection Agency Products of Incomplete Combustion

CAS #	Compound Name	Historical EPA PICs: Table A-1 [HHRAP (EPA 1998)]				Coplanar PCBs Table 2-5 HHRAP (EPA 2005) [a]	Already assigned as COPC	Added to WTP COPCs as EPA PICs [b]
		EPA Compounds Identified in Combustion Unit Emissions	EPA Recommended and Potential PICs	PICs in Stack Emission Actually Detected	EPA Identified PIC			
309-00-2	Aldrin							
311-45-5	Diethyl-p-nitrophenyl phosphate							
3114-55-4	Chlorobenzene-d5							
31508-00-6	2,3',4,4',5-Pentachlorobiphenyl (PCB 118)					x		x
315-18-4	Mexacarbate							
319-84-6	alpha-Hexachlorocyclohexane (alpha-BHC)		x		x		x	
319-85-7	beta-Hexachlorocyclohexane (beta-BHC)		x		x		x	
319-86-8	delta-BHC							
321-60-8	2-Fluorobiphenyl							
32598-13-3	3,3',4,4'-Tetrachlorobiphenyl (PCB 77)					x		x
32598-14-4	2,3,3',4,4'-Pentachlorobiphenyl (PCB 105)					x		x
3268-87-9	Octachlorodibenzo(p)dioxin	x	x		x			x
32774-16-6	3,3',4,4',5,5'-Hexachlorobiphenyl (PCB 169)					x		x
3288-58-2	O,O-Diethyl S-methyl dithiophosphate							
33213-65-9	Endosulfan II							
33245-39-5	Fluchloralin							
334-88-3	Diazomethane							
353-50-4	Carbon oxyfluoride							
357-57-3	Brucine							
35822-46-9	1,2,3,4,6,7,8-Heptachlorodibenzo(p)dioxin	x	x		x			x
367-12-4	2-Fluorophenol							
3689-24-5	Tetraethyl dithiopyrophosphate							
38380-08-4	2,3,3',4,4',5-Hexachlorobiphenyl (PCB 156)					x		x
39001-02-0	Octachlorodibenzofuran	x	x		x			x
39196-18-4	Thiofanox							

Table E-1 US Environmental Protection Agency Products of Incomplete Combustion

CAS #	Compound Name	Historical EPA PICs: Table A-1 [HHRAP (EPA 1998)]				Coplanar PCBs Table 2-5 HHRAP (EPA 2005) [a]	Already assigned as COPC	Added to WTP COPCs as EPA PICs [b]
		EPA Compounds Identified in Combustion Unit Emissions	EPA Recommended and Potential PICs	PICs in Stack Emission Actually Detected	EPA Identified PIC			
39227-28-6	1,2,3,4,7,8-Hexachlorodibenzo(p)dioxin	x	x		x			x
39300-45-3	Dinocap							
39635-31-9	2,3,3',4,4',5,5'-Heptachlorobiphenyl (PCB 189)					x		x
40321-76-4	1,2,3,7,8-Pentachlorodibenzo(p)dioxin	x	x	x	x			x
4170-30-3	Crotonaldehyde (Propylene aldehyde)		x		x			x
41851-50-7	Chlorocyclopentadiene	x	x		x			x
4549-40-0	N-Nitrosomethylvinylamine							
460-00-4	4-Bromofluorobenzene							
460-19-5	Cyanogen (oxalonitrile)		x		x			x
463-58-1	Carbonyl sulfide							
465-73-6	Isodrin							
470-90-6	Chlorfenvinphos							
479-45-8	Tetryl							
492-80-8	Auramine							
494-03-1	Chlornaphazin							
50-00-0	Formaldehyde (methylene oxide)	x	x		x		x	
50-06-6	Phenobarbital							
50-07-7	Mitomycin							
50-18-0	Cyclophosphamide							
50-29-3	4,4'-DDT X							
50-32-8	Benzo(a)Pyrene	x	x	x	x		x	
504-24-5	4-Aminopyridine							
50-55-5	Reserpine							
505-60-2	Mustard gas							
506-61-6	Potassium silver cyanide							

Table E-1 US Environmental Protection Agency Products of Incomplete Combustion

CAS #	Compound Name	Historical EPA PICs: Table A-1 [HHRAP (EPA 1998)]				Coplanar PCBs Table 2-5 HHRAP (EPA 2005) [a]	Already assigned as COPC	Added to WTP COPCs as EPA PICs [b]
		EPA Compounds Identified in Combustion Unit Emissions	EPA Recommended and Potential PICs	PICs in Stack Emission Actually Detected	EPA Identified PIC			
506-64-9	Silver cyanide							
506-68-3	Cyanogen bromide (bromocyanide)		x		x			x
506-77-4	Cyanogen chloride		x		x			x
510-15-6	Chlorobenzilate		x		x			x
51207-31-9	2,3,7,8-Tetrachlorodibenzofuran	x	x	x	x			x
512-56-1	Trimethyl phosphate							
51-28-5	2,4-Dinitrophenol		x		x			x
5131-60-2	4-Chloro-1,3-phenylenediamine							
51-43-4	Epinephrine							
51-52-5	Propylthiouracil							
51-79-6	Ethyl carbamate (urethane)		x		x			x
52663-72-6	2,3',4,4',5,5'-Hexachlorobiphenyl (PCB 167)					x		x
528-29-0	1,2-Dinitrobenzene (o-Dinitrobenzene)		x		x			x
52-85-7	Famphur							
532-27-4	2-Chloroacetophenone		x		x			x
5344-82-1	1-(o-Chlorophenyl)thiourea							
534-52-1	4,6-Dinitro-o-cresol		x		x			x
53469-21-9	Aroclor-1242							
53494-70-5	Endrin ketone							
53-70-3	Dibenzo(a,h)anthracene		x		x		x	
5385-75-1	Dibenzo(a,e)fluoranthene	x	x		x			x
53-96-3	2-Acetylaminofluorene							
540-36-3	1,4-Difluorobenzene							
540-73-8	1,2-Dimethylhydrazine		x		x			x
540-84-1	2,2,4-Trimethylpentane		x		x			x

Table E-1 US Environmental Protection Agency Products of Incomplete Combustion

CAS #	Compound Name	Historical EPA PICs: Table A-1 [HHRAP (EPA 1998)]				Coplanar PCBs Table 2-5 HHRAP (EPA 2005) [a]	Already assigned as COPC	Added to WTP COPCs as EPA PICs [b]
		EPA Compounds Identified in Combustion Unit Emissions	EPA Recommended and Potential PICs	PICs in Stack Emission Actually Detected	EPA Identified PIC			
54-11-5	Nicotine							
541-53-7	Dithiobiuret							
541-73-1	1,3-Dichlorobenzene		x	x	x		x	
542-62-1	Barium cyanide							
542-75-6	1,3-Dichloropropene		x		x			x
542-76-7	3-Chloropropionitrile							
542-88-1	bis(Chloromethyl)ether	x	x		x			x
544-92-3	Copper cyanide							
55-18-5	Nitrosodiethylamine							
55-38-9	Fenthion							
55-63-0	Nitroglycerine							
55673-89-7	1,2,3,4,7,8,9-Heptachlorodibenzofuran	x	x		x			x
557-19-7	Nickel cyanide							
557-21-1	Zinc cyanide							
55-91-4	Diisopropylfluorophosphate (DFP)							
56-04-2	Methylthiouracil							
56-23-5	Carbon tetrachloride	x	x	x	x		x	
563-12-2	Ethion							
563-68-8	Thallium(I)acetate							
56-38-2	Parathion							
56-49-5	3-Methylcholanthrene							
56-53-1	Diethylstilbestrol							
56-55-3	Benzo(a)anthracene	x	x		x		x	
56-57-5	Nitroquinoline-1-oxide							
56-72-4	Coumaphos							

Table E-1 US Environmental Protection Agency Products of Incomplete Combustion

CAS #	Compound Name	Historical EPA PICs: Table A-1 [HHRAP (EPA 1998)]				Coplanar PCBs Table 2-5 HHRAP (EPA 2005) [a]	Already assigned as COPC	Added to WTP COPCs as EPA PICs [b]
		EPA Compounds Identified in Combustion Unit Emissions	EPA Recommended and Potential PICs	PICs in Stack Emission Actually Detected	EPA Identified PIC			
57117-31-4	2,3,4,7,8-Pentachlorodibenzofuran	x	x	x	x			x
57117-41-6	1,2,3,7,8-Pentachlorodibenzofuran	x	x	x	x			x
57117-44-9	1,2,3,6,7,8-Hexachlorodibenzofuran	x	x		x			x
57-12-5	Cyanide			x	x		x	
57-14-7	1,1-Dimethyl hydrazine							
57-24-9	Strychnine		x		x			x
57-41-0	5,5-Diphenylhydantoin							
57465-28-8	3,3',4,4',5-Pentachlorobiphenyl (PCB 126)					x		x
57-57-8	beta-Propiolactone							
57653-85-7	1,2,3,6,7,8,-Hexachlorodibenzo(p)dioxin	x	x		x			x
57-74-9	Chlordane		x		x			x
57-97-6	7,12-Dimethylbenz(a)anthracene							
584-84-9	2,4-Toluene diisocyanate		x		x			x
58-89-9	gamma-BHC (Lindane)		x		x		x	
58-90-2	2,3,4,6-Tetrachlorophenol							
591-08-2	1-Acetyl-2-thiourea							
591-78-6	2-Hexanone (butyl methyl ketone)							
592-01-8	Calcium cyanide							
593-60-2	Bromoethene (Vinyl bromide)		x		x			x
59-50-7	4-Chloro-3-methylphenol (p-chloro-m-cresol)							
598-31-2	Bromoacetone							
59-89-2	N-Nitrosomorpholine							
60-09-3	Aminoazobenzene							
60-11-7	Dimethyl aminoazobenzene		x		x			x
602-87-9	5-Nitroacenaphthene							

Table E-1 US Environmental Protection Agency Products of Incomplete Combustion

CAS #	Compound Name	Historical EPA PICs: Table A-1 [HHRAP (EPA 1998)]				Coplanar PCBs Table 2-5 HHRAP (EPA 2005) [a]	Already assigned as COPC	Added to WTP COPCs as EPA PICs [b]
		EPA Compounds Identified in Combustion Unit Emissions	EPA Recommended and Potential PICs	PICs in Stack Emission Actually Detected	EPA Identified PIC			
60-34-4	Methyl hydrazine							
60-35-5	Acetamide							
60-51-5	Dimethoate							
60-57-1	Dieldrin							
606-20-2	2,6-Dinitrotoluene		x		x			x
60851-34-5	2,3,4,6,7,8-Hexachlorodibenzofuran	x	x		x			x
608-93-5	Pentachlorobenzene	x	x	x	x			x
615-53-2	N-Nitroso-N-methylurethane							
61626-71-9	Dichloropentadiene		x		x			x
61-82-5	Amitrole							
621-64-7	Di-n-propylnitrosamine		x		x		x	
62-38-4	Phenylmercury acetate							
62-44-2	Phenacetin							
624-83-9	Methyl isocyanate		x		x			x
62-50-0	Ethyl methanesulfonate		x		x			x
62-53-3	Aniline		x		x			x
62-55-5	Thioacetamide							
62-56-6	Thiourea							
62-73-7	Dichlorovos							
62-74-8	Fluoroacetic acid, sodium salt							
62-75-9	N-Nitrosodimethylamine (dimethylnitrosamine)		x		x		x	
628-86-4	Mercury fulminate							
630-10-4	Selenourea							
630-20-6	1,1,1,2-Tetrachloroethane	x	x		x		x	
63-25-2	Carbaryl							

Table E-1 US Environmental Protection Agency Products of Incomplete Combustion

CAS #	Compound Name	Historical EPA PICs: Table A-1 [HHRAP (EPA 1998)]				Coplanar PCBs Table 2-5 HHRAP (EPA 2005) [a]	Already assigned as COPC	Added to WTP COPCs as EPA PICs [b]
		EPA Compounds Identified in Combustion Unit Emissions	EPA Recommended and Potential PICs	PICs in Stack Emission Actually Detected	EPA Identified PIC			
636-21-5	o-Toluidine hydrochloride							
640-19-7	Fluoroacetamide							
64-17-5	Ethanol							
64-18-6	Formic acid (methanoic acid)		x		x			x
64-67-5	Diethyl sulfate							
6533-73-9	Thallium(I)carbonate							
65510-44-3	2',3,4,4',5-Pentachlorobiphenyl (PCB 123)					x		x
65-85-0	Benzoic acid			x	x			x
66-27-3	Methyl methanesulfonate							
66-75-1	Uracil mustard							
67-56-1	Methanol							
67562-39-4	1,2,3,4,6,7,8-Heptachlorodibenzofuran	x	x		x			x
67-64-1	Acetone			x	x		x	
67-66-3	Chloroform (trichloromethane)	x	x	x	x		x	
67-72-1	Hexachloroethane (perchloroethane)	x	x		x		x	
680-31-9	Hexamethylphosphoramide							
68-12-2	Dimethyl formamide							
684-93-5	N-Nitroso-N-methylurea							
6923-22-4	Monocrotophos							
692-42-2	Diethylarsine							
6959-48-4	3-(Chloromethyl)pyridine hydrochloride							
696-28-6	Dichlorophenylarsine							
69782-90-7	2,3,3',4,4',5'-Hexachlorobiphenyl (PCB 157)					x		x
7005-72-3	4-Chlorophenyl phenyl ether							
70-25-7	N-Methyl-N'-nitro-N-nitrosoguanidine							

Table E-1 US Environmental Protection Agency Products of Incomplete Combustion

CAS #	Compound Name	Historical EPA PICs: Table A-1 [HHRAP (EPA 1998)]				Coplanar PCBs Table 2-5 HHRAP (EPA 2005) [a]	Already assigned as COPC	Added to WTP COPCs as EPA PICs [b]
		EPA Compounds Identified in Combustion Unit Emissions	EPA Recommended and Potential PICs	PICs in Stack Emission Actually Detected	EPA Identified PIC			
	(MNNG)							
70-30-4	Hexachlorophene		x		x			x
70362-50-4	3,4,4',5-Tetrachlorobiphenyl (PCB 81)					x		x
70648-26-9	1,2,3,4,7,8-Hexachlorodibenzofuran	x	x		x			x
71-43-2	Benzene	x	x	x	x		x	
71-55-6	Methyl chloroform (1,1,1-trichloroethane)	x	x	x	x		x	
72-20-8	Endrin							
72-33-3	Mestranol							
72-43-5	Methoxychlor		x		x		x	
72-54-8	4,4'-DDD							
72-55-9	DDE		x		x		x	
72-57-1	Trypan blue							
72918-21-9	1,2,3,7,8,9-Hexachlorodibenzofuran	x	x		x			x
732-11-6	Phosmet							
7421-93-4	Endrin aldehyde							
7439-92-1	Lead	x	x	x	x		x	
7439-96-5	Manganese	x		x	x		x	
7439-97-6	Mercury	x	x	x	x		x	
7440-02-0	Nickel	x	x	x	x		x	
7440-22-4	Silver	x	x		x		x	
7440-28-0	Thallium	x	x		x		x	
7440-36-0	Antimony	x	x		x		x	
7440-38-2	Arsenic	x	x	x	x		x	
7440-39-3	Barium	x	x		x		x	
7440-41-7	Beryllium		x	x	x		x	

Table E-1 US Environmental Protection Agency Products of Incomplete Combustion

CAS #	Compound Name	Historical EPA PICs: Table A-1 [HHRAP (EPA 1998)]				Coplanar PCBs Table 2-5 HHRAP (EPA 2005) [a]	Already assigned as COPC	Added to WTP COPCs as EPA PICs [b]
		EPA Compounds Identified in Combustion Unit Emissions	EPA Recommended and Potential PICs	PICs in Stack Emission Actually Detected	EPA Identified PIC			
7440-43-9	Cadmium	x	x	x	x		x	
7440-47-3	Chromium (total)	x	x	x	x		x	
7440-48-4	Cobalt							
7440-50-8	Copper	x	x		x		x	
7440-62-2	Vanadium							
7440-66-6	Zinc	x		x	x		x	
7446-18-6	Thallium(I)sulfate							
74472-37-0	2,3,4,4',5-Pentachlorobiphenyl (PCB 114)					x		x
74-83-9	Bromomethane (methylbromide)	x	x	x	x		x	
74-87-3	Chloromethane (methyl chloride)	x	x	x	x		x	
7487-94-7	Mercuric chloride							
74-88-4	Methyl iodide (Iodomethane)							
7488-56-4	Selenium sulfide							
74-90-8	Hydrogen cyanide							
74-93-1	Thiomethanol							
74-95-3	Methylene bromide	x	x		x			x
74-97-5	Bromochloromethane	x	x	x	x			x
75-00-3	Chloroethane		x		x		x	
75-01-4	Vinyl chloride	x	x	x	x		x	
75-05-8	Acetonitrile	x			x		x	
75-07-0	Acetaldehyde		x		x		x	
75-09-2	Methylene chloride		x	x	x		x	
75-15-0	Carbon disulfide	x	x	x	x		x	
75-21-8	Ethylene oxide		x		x		x	
75-25-2	Bromoform		x	x	x			x

Table E-1 US Environmental Protection Agency Products of Incomplete Combustion

CAS #	Compound Name	Historical EPA PICs: Table A-1 [HHRAP (EPA 1998)]				Coplanar PCBs Table 2-5 HHRAP (EPA 2005) [a]	Already assigned as COPC	Added to WTP COPCs as EPA PICs [b]
		EPA Compounds Identified in Combustion Unit Emissions	EPA Recommended and Potential PICs	PICs in Stack Emission Actually Detected	EPA Identified PIC			
75-27-4	Bromodichloromethane	x	x	x	x		x	
75-29-6	2-Chloropropane		x		x			x
75-34-3	1,1-Dichloroethane	x	x	x	x		x	
75-35-4	1,1-Dichloroethene	x	x		x		x	
75-36-5	Acetyl chloride							
75-44-5	Phosgene (hydrogen phosphide)		x		x			x
75-45-6	Chlorodifluoromethane			x	x		x	
755-04-5	Titanium tetrachloride							
75-55-8	1,2-Propylenimine (2-methyl aziridine)							
75-56-9	Propylene oxide							
75-60-5	Cacodylic acid							
75-69-4	Trichlorofluoromethane (Freon 11)			x	x		x	
75-70-7	Trichloromethanethiol							
75-71-8	Dichlorodifluoromethane		x		x		x	
757-58-4	Hexaethyl tetraphosphate							
75-86-5	2-Methylactonitrile							
75-87-6	Chloral							
759-73-9	N-Nitroso-N-ethylurea							
76-01-7	Pentachloroethane			x	x			x
76-13-1	1,1,2-Trichloro-1,2,2-trifluoroethane(Freon 113)		x	x	x		x	
764-41-0	1,4-Dichloro-2-butene		x		x			x
76-44-8	Heptachlor		x		x		x	
7647-01-0	Hydrogen Chloride (hydrochloric acid)			x	x		x	
765-34-4	Glycidylaldehyde		x		x			x

Table E-1 US Environmental Protection Agency Products of Incomplete Combustion

CAS #	Compound Name	Historical EPA PICs: Table A-1 [HHRAP (EPA 1998)]				Coplanar PCBs Table 2-5 HHRAP (EPA 2005) [a]	Already assigned as COPC	Added to WTP COPCs as EPA PICs [b]
		EPA Compounds Identified in Combustion Unit Emissions	EPA Recommended and Potential PICs	PICs in Stack Emission Actually Detected	EPA Identified PIC			
7664-38-2	Phosphoric acid							
7664-39-3	Hydrogen fluoride			x	x		x	
7664-41-7	Ammonia		x	x	x		x	
7700-17-6	Crotoxyphos							
7723-14-0	Phosphorus							
77-47-4	Hexachlorocyclopentadiene		x	x	x			x
77-78-1	Dimethyl sulfate		x		x			x
7778-39-4	Arsenic acid							
7782-41-4	Fluorine							
7782-49-2	Selenium	x	x		x		x	
7782-50-5	Chlorine							
7783-00-8	Selenium dioxide							
7783-06-4	Hydrogen sulfide							
7786-34-7	Mevinphos							
7791-12-0	Thallium(I)chloride							
78-00-2	Tetraethyl lead							
7803-51-2	Phosphine							
7803-55-6	Ammonium vanadate							
78-32-0	Tri-p-tolyl phosphate							
78-34-2	Dioxathion							
78-59-1	Isophorone							
786-19-6	Carbophenothion							
78-83-1	Isobutyl alcohol							
78-87-5	1,2-Dichloropropane		x	x	x		x	
78-93-3	2-Butanone (methyl ethyl ketone)	x	x	x	x		x	

Table E-1 US Environmental Protection Agency Products of Incomplete Combustion

CAS #	Compound Name	Historical EPA PICs: Table A-1 [HHRAP (EPA 1998)]				Coplanar PCBs Table 2-5 HHRAP (EPA 2005) [a]	Already assigned as COPC	Added to WTP COPCs as EPA PICs [b]
		EPA Compounds Identified in Combustion Unit Emissions	EPA Recommended and Potential PICs	PICs in Stack Emission Actually Detected	EPA Identified PIC			
78-97-7	2-Hydroxypropionitrile							
79-00-5	1,1,2-Trichloroethane	x	x	x	x		x	
79-01-6	Trichloroethene	x	x	x	x		x	
79-06-1	Acrylamide							
79-10-7	Acrylic acid							
79-11-8	Chloroacetic acid							
79-19-6	Thiosemicarbazide							
79-20-9	Methyl acetate							
79-22-1	Methyl chlorocarbonate							
79-34-5	1,1,2,2-Tetrachloroethane	x	x		x		x	
79-44-7	Dimethyl carbamoyl chloride							
79-46-9	2-Nitropropane							
8001-35-2	Toxaphene (chlorinated camphene)							
80-62-6	Methyl methacrylate							
8065-48-3	Demeton							
81-07-2	Saccharin							
81-81-2	Warfarin							
822-06-0	Hexamethylene-1,5-diisocyanate		x		x			x
823-40-5	Toluene-2,6-diamine		x		x			x
82-68-8	Pentachloronitrobenzene (PCNB)		x		x		x	
83-32-9	Acenaphthene							
84-66-2	Diethyl phthalate		x	x	x		x	
84-74-2	Dibutyl phthalate	x	x	x	x		x	
85-01-8	Phenanthrene							
85-44-9	Phthalic anhydride (1,2-benzenedicarboxylic		x		x			x

Table E-1 US Environmental Protection Agency Products of Incomplete Combustion

CAS #	Compound Name	Historical EPA PICs: Table A-1 [HHRAP (EPA 1998)]				Coplanar PCBs Table 2-5 HHRAP (EPA 2005) [a]	Already assigned as COPC	Added to WTP COPCs as EPA PICs [b]
		EPA Compounds Identified in Combustion Unit Emissions	EPA Recommended and Potential PICs	PICs in Stack Emission Actually Detected	EPA Identified PIC			
	anhydride)							
85-68-7	Butylbenzyl phthalate	x	x	x	x		x	
86-30-6	N-Nitrosodiphenylamine							
86-50-0	Azinphos-methyl							
86-73-7	Fluorene	x			x		x	
86-88-4	alpha-Naphthylthiourea							
87-65-0	2,6-Dichlorophenol							
87-68-3	Hexachlorobutadiene (perchlorobutadiene)	x	x	x	x		x	
87-86-5	Pentachlorophenol	x	x	x	x		x	
88-06-2	2,4,6-Trichlorophenol	x	x	x	x		x	
88-74-4	o-Nitroaniline (2-nitroaniline)		x		x			x
88-75-5	2-Nitrophenol			x	x		x	
88-85-7	Dinoseb							
90-04-0	o-Anisidine		x		x			x
90-13-1	1-Chloronaphthalene							
91-20-3	Naphthalene	x	x	x	x		x	
91-22-5	Quinoline		x		x			x
91-57-6	2-Methylnaphthalene							
91-58-7	2-Chloronaphthalene		x		x		x	
91-59-8	2-Naphthylamine (beta-naphthylamine)							
91-80-5	Methapyrilene							
91-94-1	3,3'-Dichlorobenzidine		x		x			x
924-16-3	N-Nitroso-di-n-Buetylamine		x		x			x
92-52-4	Biphenyl	x	x		x		x	
92-67-1	4-Aminobiphenyl							

Table E-1 US Environmental Protection Agency Products of Incomplete Combustion

CAS #	Compound Name	Historical EPA PICs: Table A-1 [HHRAP (EPA 1998)]				Coplanar PCBs Table 2-5 HHRAP (EPA 2005) [a]	Already assigned as COPC	Added to WTP COPCs as EPA PICs [b]
		EPA Compounds Identified in Combustion Unit Emissions	EPA Recommended and Potential PICs	PICs in Stack Emission Actually Detected	EPA Identified PIC			
92-87-5	Benzidine							
92-93-3	4-Nitrobiphenyl							
930-55-2	N-Nitrosopyrrolidine							
93-72-1	Silvex							
94-58-6	Dihydrosaffrole							
94-59-7	Safrole (5-(2-Propenyl)-1,3-benzodioxole)		x		x			x
94-75-7	2,4-D		x		x		x	
95-06-7	Sulfallate							
95-47-6	o-Xylene (dimethyl benzene)	x	x	x	x		x	
95-48-7	2-Methylphenol (o-Cresol)		x		x		x	
95-50-1	1,2-Dichlorobenzene [4]	x	x	x	x		x	
95-53-4	o-Toluidine		x		x			x
95-57-8	2-Chlorophenol		x	x	x		x	
95-79-4	5-Chloro-2-methylaniline							
95-80-7	2,4-Toluene diamine							
95-83-0	4-Chloro-1,2-phenylenediamine							
95-94-3	1,2,4,5-Tetrachlorobenzene	x	x	x	x			x
95-95-4	2,4,5-Trichlorophenol	x	x		x		x	
959-98-8	Endosulfan I							
96-09-3	Styrene oxide							
961-11-5	Tetrachlorvinphos							
96-12-8	1,2-Dibromo-3-chloropropane	x	x		x			x
96-18-4	1,2,3-Trichloropropane		x		x			x
96-23-1	1,3-Dichloro-2-propanol							
96-45-7	Ethylene thiourea		x		x			x

Table E-1 US Environmental Protection Agency Products of Incomplete Combustion

CAS #	Compound Name	Historical EPA PICs: Table A-1 [HHRAP (EPA 1998)]				Coplanar PCBs Table 2-5 HHRAP (EPA 2005) [a]	Already assigned as COPC	Added to WTP COPCs as EPA PICs [b]
		EPA Compounds Identified in Combustion Unit Emissions	EPA Recommended and Potential PICs	PICs in Stack Emission Actually Detected	EPA Identified PIC			
97-63-2	Ethyl methacrylate		x		x			x
98-01-1	Furfural		x		x			x
98-07-7	Benzotrichloride		x		x			x
98-82-8	Cumene	x	x	x	x		x	
98-83-9	Methyl styrene (mixed isomers)		x		x			x
98-86-2	Acetophenone		x	x	x		x	
98-87-3	Benzal chloride							
98-95-3	Nitrobenzene		x		x		x	
99-09-2	3-Nitroaniline							
99-35-4	1,3,5-Trinitrobenzene		x		x			x
99-55-8	5-Nitro-o-toluidine							
99-59-2	5-Nitro-o-anisidine							
99-65-0	1,3-Dinitrobenzene		x		x			x
N/A	2,3,7,8-substituted Polychlorinated dibenzo(p)dioxin congeners (2,3,7,8-PCDDs)							
N/A	Beryllium compounds							
N/A	Cadmium compounds							
N/A	N-Chlorodiisopropyl amine							
N/A	N-Chloroisopropyl amine							
N/A	Chromium compounds							
N/A	Creosote							
N/A	Cyanide compounds							
N/A	Dibutylchloramine							
N/A	3,3-Dichloroisopropyl ether							
N/A	Lead compounds							

Table E-1 US Environmental Protection Agency Products of Incomplete Combustion

CAS #	Compound Name	Historical EPA PICs: Table A-1 [HHRAP (EPA 1998)]				Coplanar PCBs Table 2-5 HHRAP (EPA 2005) [a]	Already assigned as COPC	Added to WTP COPCs as EPA PICs [b]
		EPA Compounds Identified in Combustion Unit Emissions	EPA Recommended and Potential PICs	PICs in Stack Emission Actually Detected	EPA Identified PIC			
N/A	Nicotine salts							
N/A	2-Nitrodiphenylamine							
N/A	Saccharin salts							
N/A	Sodium O-ethylmethylphosphonate Diisopropylamine							
N/A	Strychnine salts							
N/A	Thioamine							
N/A	O-decyl-hydroxylamine							
N/A	Acenaphthene-d10							
N/A	Antimony compounds							
N/A	Arsenic compounds (inorganic, including arsine)							
N/A	2-Chloro-1,3-butadiene							
N/A	Chrysene-d12							
N/A	Cobalt compounds							
N/A	Coke oven emissions							
N/A	Dibenz(a)anthracene							
N/A	1,4-Dichlorobenzene-d4							
N/A	Dichloroethylene							
N/A	Dichloropropane							
N/A	Dichloropropanols							
N/A	Dichloropropene							
N/A	Manganese compounds							
N/A	Mercury compounds							
N/A	Naphthalene-d8							

Table E-1 US Environmental Protection Agency Products of Incomplete Combustion

CAS #	Compound Name	Historical EPA PICs: Table A-1 [HHRAP (EPA 1998)]				Coplanar PCBs Table 2-5 HHRAP (EPA 2005) [a]	Already assigned as COPC	Added to WTP COPCs as EPA PICs [b]
		EPA Compounds Identified in Combustion Unit Emissions	EPA Recommended and Potential PICs	PICs in Stack Emission Actually Detected	EPA Identified PIC			
N/A	Nickel compounds							
N/A	Nitrobenzene-d5							
N/A	Perylene-d12							
N/A	Phenanthrene-d10							
N/A	Phenol-d6							
N/A	Phenolic compounds							
N/A	Phosphorodithioic and phosphorothioic acid esters							
N/A	2,3,7,8-substituted Polychlorinated dibenzofuran congeners (2,3,7,8-PCDFs)							
N/A	Selenium compounds							
N/A	Tetrachlorobenzene							
N/A	2,4,6-Tribromophenol							
N/A	Trichloropropane							
N/A	Dibenzo(a,h)fluoranthene	x	x		x [2]			x

Notes:
[1] WTP and Ecology subsequently agreed to treat these EPA PICs as WTP feed constituents (Appendix G).
[2] WTP and Ecology subsequently agreed that this compound could not structurally exist (Appendix G).
[3] Although this constituent is identified as an EPA PIC, WTP has decided to treat all chromium as hexavalent, thus total chromium will substitute (Appendix G).
[4] Corrected EPA CAS No.; EPA has CAS No. 95-55-1 in HHRAP 1998.

[a] An "x" in the box indicates EPA identified the compound as a coplanar PCB in HHRAP 2005.
[b] An "x in the box indicates the constituent was retained as a WTP stack emission COPC because it is an EPA identified PIC

N/A = no CAS number available.

Appendix F

Site-Specific PICs Identified in Research and Technology Development Testing

Appendix F
Site-Specific PICs Identified in Research and Technology Development Testing

Beginning in 1998, the WTP investigated the types and concentrations of emissions that potentially could result from vitrification melter operations. A total of eight tests were conducted by the Vitreous State Laboratory of the Catholic University of America (VSL), and Duratek, Inc., providing emissions data on PICs and destruction and removal efficiencies for waste feed constituents. These tests are documented in the following reports:

1) VSL 1999. *Determination of the Fate of Hazardous Organics During Vitrification of RPP-WTP LAW and HLW Simulants*, Final Report, Rev 0, VSL-99R3580-2, KS Matlack and IL Pegg, Vitreous State Laboratory, The Catholic University of America, Washington, DC, October 4, 1999.

2) VSL 2003. *Integrated Off-Gas System Tests on the DM1200 Melter with RPP-WTP LAW Sub-Envelope C1 Simulants*, Final Report, Rev 1, VSL-02R8800-1, KS Matlack, W Gong, T Bardakci, N D'Angelo, and IL Pegg, Vitreous State Laboratory, The Catholic University of America, Washington, DC, September 23, 2003.

3) VSL 2003. *Integrated Off-Gas System Tests on the DM1200 Melter with RPP-WTP LAW Sub-Envelope B1 Simulants*, Final Report, Rev 0, VSL-03R3851-1, KS Matlack, W Gong, T Bardakci, N D'Angelo, and IL Pegg, Vitreous State Laboratory, The Catholic University of America, Washington, DC, October 17, 2003.

4) VSL 2003. *Integrated Off-Gas System Tests on the DM1200 Melter with RPP-WTP LAW Sub-Envelope A1 Simulants*, Final Report, Rev 1, VSL-02R8800-2, KS Matlack, W Gong, T Bardakci, N D'Angelo, and IL Pegg, Vitreous State Laboratory, The Catholic University of America, Washington, DC, November 5, 2003.

5) VSL 2005. *Regulatory Off-Gas Emissions Testing on the DM1200 Melter System Using HLW and LAW Simulants*, Final Report, Rev 0, VSL-05R5830-1, KS Matlack, W Gong, T Bardakci, N D'Angelo, M Brandys, W Kot, and IL Pegg, Vitreous State Laboratory, The Catholic University of America, Washington, DC, October 31, 2005.

6) Duratek 2003. *RPP-WTP Pilot Melter Envelope A Emissions Test Results Report*, Rev 1, TRR-PLT-062, Duratek, Inc., Columbia, Maryland, September 10, 2003.

7) Duratek 2003. *RPP-WTP Pilot Melter Envelope B Emissions Test Results Report*, Rev 0, TRR-PLT-075, Duratek, Inc., Columbia, Maryland, September 10, 2003.

8) Duratek 2003. *RPP-WTP Pilot Melter Envelope C Emissions Test Results Report*, Rev 1, TRR-PLT-077, Duratek, Inc., Columbia, Maryland, August 28, 2003.

For the purpose of providing a complete list of COPCs for evaluation during subsequent permitting activities, all compounds that were detected were included as a COPC without regard to a requirement for meeting quality assurance standards for those analytes near detection limits. Therefore, those compounds that were detected at concentrations between the method detection limit and the estimated quantitation limit as well as tentatively identified compounds were retained as COPCs.

A total of 144 constituents were identified by this process. Table F-1 provides a summary of the detected constituents during the melter emissions testing. Each compound listed in Table F-1 was detected during VSL testing. Those compounds potentially in the waste feed or identified as a WTP stack emission measurement compound by previous steps were eliminated. Those not eliminated were added as site-specific PICs (Table F-1).

There were 6 site-specific PICs that were removed from the TAPs list in the revision to the regulation, but were retained because they were detected during pilot-scale melter testing. Three PICs were in the RDQO starting list of 125 constituents and 2 were in the low-toxicity list added at the request of EPA. An additional PIC that did not meet the criteria for listing as feed COPC was also detected will be added as stack emissions COPCs. One PIC detected during testing is on the EPA PIC list. An additional 26 PICs detected do not show up on particular input but are nonetheless retained as COPCs because of their presence in test samples taken by VSL. This process added 33 PIC COPCs that were not previously identified as WTP COPCs.

Table F-1 Site-Specific PICs Identified in VSL Testing

CAS #	Constituent Detected During VSL Testing	Site-Specific PIC COPCs Identified in VSL Testing	Identified as WTP Waste Feed or stack Emissions COPC (Table 2-1 source code shown)
100-41-4	Ethyl benzene		1
100-42-5	Styrene		1
106-46-7	1,4-Dichlorobenzene		1
107-05-1	3-Chloropropene (Allyl chloride)		1
107-06-2	1,2-Dichloroethane		1
107-13-1	Acrylonitrile		1
108-88-3	Toluene		1
108-90-7	Chlorobenzene		1
108-95-2	Phenol		1
120-82-1	1,2,4-Trichlorobenzene		1
127-18-4	1,1,2,2-Tetrachloroethene		1
50-32-8	Benzo(a)pyrene		1
53-70-3	Dibenz[a,h]anthracene		1
541-73-1	1,3-Dichlorobenzene		1
56-23-5	Carbon tetrachloride		1
591-78-6	2-Hexanone		1
67-64-1	2-Propanone (Acetone)		1
67-66-3	Chloroform		1
71-43-2	Benzene		1
74-83-9	Bromomethane		1
74-87-3	Chloromethane		1
75-00-3	Chloroethane		1
75-01-4	1-Chloroethene (Vinyl chloride)		1
75-05-8	Acetonitrile		1
75-09-2	Dichloromethane (Methylene Chloride)		1
75-15-0	Carbon disulfide		1
75-34-3	1,1-Dichloroethane		1
75-35-4	1,1-Dichloroethene		1
75-69-4	Trichlorofluoromethane		1
78-93-3	2-Butanone		1
79-01-6	1,1,2-Trichloroethylene		1
87-68-3	Hexachlorobutadiene		1
95-50-1	1,2-Dichlorobenzene		1
98-86-2	Acetophenone		1
98-95-3	Nitrobenzene		1
117-81-7	Bis (2-ethylhexyl) phthalate		3
117-84-0	Di-n-octyl phthalate		3
120-12-7	Anthracene		3
120-83-2	2,4-Dichlorophenol		3
129-00-0	Pyrene		3
156-60-5	1,2-trans-Dichloroethene		3

Table F-1 Site-Specific PICs Identified in VSL Testing

CAS #	Constituent Detected During VSL Testing	Site-Specific PIC COPCs Identified in VSL Testing	Identified as WTP Waste Feed or stack Emissions COPC (Table 2-1 source code shown)
191-24-2	Benzo(g,h,i)perylene		3
193-39-5	Indeno(1,2,3-cd)pyrene		3
205-99-2	Benzo(b)fluoranthene		13
206-44-0	Fluoranthene		3
207-08-9	Benzo(k)fluoranthene		13
208-96-8	Acenaphthylene		3
218-01-9	Chrysene		13
56-55-3	Benzo(a)anthracene		13
59-50-7	4-Chloro-3-methylphenol		3
621-64-7	N-Nitroso-di-n-propylamine		3
630-20-6	1,1,1,2-Tetrachloroethane		3
75-27-4	Bromodichloromethane		3
83-32-9	Acenaphthene		3
84-66-2	Diethyl phthalate		3
84-74-2	Di-n-butylphthalate		3
85-01-8	Phenanthrene		3
85-68-7	Butylbenzylphthalate		3
86-73-7	Fluorene		3
88-75-5	2-Nitrophenol		3
91-20-3	Naphthalene		3
91-58-7	2-Chloronaphthalene		3
95-48-7	o-Cresol		3
95-57-8	2-Chlorophenol		3
98-82-8	Cumene		3
100-02-7	4-Nitrophenol		4
121-14-2	2,4-Dinitrotoluene		4
1330-20-7	Xylenes (total)		4
92-52-4	1,1`-Biphenyl		5
100-44-7	Benzyl chloride		13
100-52-7	Benzaldehyde		13
105-67-9	2,4-Dimethylphenol		13
106-44-5	4-Methylphenol		13
108-67-8	1,3,5-Trimethylbenzene		13
132-64-9	Dibenzofuran		13
1746-01-6	TCDD (Dioxin/Furan Indicator)		13
192-97-2	Benzo(e)pyrene		13
19408-74-3	1,2,3,7,8,9-Hexachlorodibenzo(p)dioxin		13
31508-00-6	2,3',4,4',5-Pentachlorobiphenyl (PBC 118)		13
32598-13-3	3,3',4,4'-Tetrachlorobiphenyl (TCB)		13
32598-14-4	2,3,3',4,4'-Pentachlorobiphenyl (PCB 105)		13
3268-87-9	1,2,3,4,6,7,8,9 Octachlorodibenzo(p)dioxin		13

Table F-1 Site-Specific PICs Identified in VSL Testing

CAS #	Constituent Detected During VSL Testing	Site-Specific PIC COPCs Identified in VSL Testing	Identified as WTP Waste Feed or stack Emissions COPC (Table 2-1 source code shown)
32774-16-6	3,3',4,4',5,5'-Hexachlorobiphenyl		13
35822-46-9	1,2,3,4,6,7,8-Heptachlorodibenzo(p)dioxin		13
38380-08-4	2,3,3',4,4',5-Hexachlorobiphenyl (PCB 157)		13
39001-02-0	1,2,3,4,6,7,8,9 Octachlorodibenzofuran		13
39227-28-6	1,2,3,4,7,8-Hexachlorodibenzo(p)dioxin		13
39635-31-9	2,3,3',4,4',5,5'-Heptachlorobiphenyl		13
40321-76-4	1,2,3,7,8-Pentachlorodibenzo(p)dioxin		13
51207-31-9	2,3,7,8-Tetrachlorodibenzofuran		13
51-28-5	2,4-Dinitrophenol		13
52663-72-6	2,3',4,4',5,5'-Hexachlorobiphenyl		13
534-52-1	4,6-Dinitro-2-methylphenol (4,6-Dinitro-o-cresol)		13
55673-89-7	1,2,3,4,7,8,9-Heptachlorodibenzofuran		13
57117-31-4	2,3,4,7,8-Pentachlorodibenzofuran		13
57117-41-6	1,2,3,7,8-Pentachlorodibenzofuran		13
57117-44-9	1,2,3,6,7,8-Hexachlorodibenzofuran		13
57465-28-8	3,3',4,4',5-Pentachlorobiphenyl		13
57653-85-7	1,2,3,6,7,8,-Hexachlorodibenzo(p)dioxin		13
60851-34-5	2,3,4,6,7,8-Hexachlorodibenzofuran		13
65510-44-3	2',3,4,4',5-Pentachlorobiphenyl		13
67562-39-4	1,2,3,4,6,7,8-Heptachlorodibenzofuran		13
69782-90-7	2,3,3',4,4',5'-Hexachlorobiphenyl		13
70362-50-4	3,4,4',5-Tetrachlorobiphenyl		13
70648-26-9	1,2,3,4,7,8-Hexachlorodibenzofuran		13
72918-21-9	1,2,3,7,8,9-Hexachlorodibenzofuran		13
74472-37-0	2,3,4,4',5-Pentachlorobiphenyl		13
74-97-5	Bromochloromethane		13
75-25-2	Tribromomethane (Bromoform)		13
96-12-8	1,2-Dibromo-3-chloropropane		13
97-63-2	Ethyl methacrylate		13
74-88-4	Iodomethane	X	14
80-62-6	Methyl methacrylate	X	14
110-83-8	Cyclohexene	X	14
111-65-9	n-Octane	X	14
111-84-2	n-Nonane	X	14
540-59-0	1,2-Dichloroethene (total) (1,2-Dichloroethylene)	X	14
95-49-8	o-Chlorotoluene	X	14
100-47-0	Benzonitrile	X	14
100-51-6	Benzyl alcohol	X	14
103-65-1	n-Propyl benzene (Isocumene)	X	14
104-51-8	n-Butylbenzene	X	14
106-43-4	4-Chlorotoluene (p-Tolyl chloride)	X	14

Table F-1 Site-Specific PICs Identified in VSL Testing

CAS #	Constituent Detected During VSL Testing	Site-Specific PIC COPCs Identified in VSL Testing	Identified as WTP Waste Feed or stack Emissions COPC (Table 2-1 source code shown)
108-86-1	Bromobenzene (Phenyl bromide)	X	14
109-75-1	3-Butenenitrile	X	14
110-00-9	Furan	X	14
1120-21-4	Undecane	X	14
112-30-1	1-Decanol	X	14
112-31-2	Decanal	X	14
112-40-3	Dodecane	X	14
124-18-5	Decane	X	14
135-98-8	sec-Butylbenzene	X	14
156-59-2	cis-1,2-Dichloroethene	X	14
2245-38-7	2,3,5-Trimethylnaphthalene	X	14
4786-20-3	2-Butenenitrile	X	14
581-42-0	2,6-Dimethylnaphthalene	X	14
591-50-4	Benzene, iodo-	X	14
832-69-9	1-Methylphenanthrene	X	14
87-61-6	1,2,3-Trichlorobenzene	X	14
90-12-0	1-Methylnaphthalene	X	14
91-57-6	2-Methylnaphthalene	X	14
95-63-6	1,2,4-Trimethyl benzene	X	14
98-06-6	tert-Butyl benzene	X	14
99-87-6	p-Cymene	X	14

Notes:
COPC = chemical of potential concern
EPA = US Environmental Protection Agency
PIC = product of incomplete combustion
VSL = Vitreous State Laboratory of the Catholic University of America
WTP = Hanford Tank Waste Treatment and Immobilization Plant

Appendix G

Adjustments to WTP COPC List During Risk Assessment Discussions

Appendix G
Adjustments to WTP COPC List During Risk Assessment Discussions

Several discussions of potential adjustments to the starting list of COPCs were held with the US EPA and Ecology. These meetings included the following:

- Risk Assessment Work Plan discussions September 2004, the WTP COPC list was reconsidered (CCN 097844)
- Environmental Risk Assessment Discussions (CCN 170036)

G.1 Adjustments to Particle-Bound and Vapor-Phase Compounds COPC List

The September 2004 meeting discussed the disposition of 31 organic COPCs that had not been detected in the Hanford tank waste (Table G-1). Twenty-two of the compounds are particle-bound constituents. Nine of the compounds are vapor-phase pesticides.

Of the 22 particle-bound compounds, ten are considered by EPA to be PICs (5 polycyclic aromatic hydrocarbons, a benzene compound and 4 pesticides). These compounds were compared with the latest update of the TWINS and BBI databases (Appendix A). One (Table G-1, disposition 3) of the ten compounds was detected in Hanford tank waste vapor space by the CHG vapor study (Appendix B); it was retained on the WTP feed COPC list. The remaining nine (Table G-1, disposition 1 and 2) compounds were removed from the WTP feed list and managed as PICs.

The other 12 particle-bound compounds on the WTP COPC list are particle-bound pesticides that have not been detected in Hanford tank waste and do not appear on the EPA PIC list. One compound, trifluralin (CAS No. 1582-09-8), was already removed by the WAC 173-460 toxic air pollutant list revision evaluation (Appendix C). The other 11 (5 from the RDQO starting list and 6 from the low-toxicity list) were removed from the WTP COPC list (Table G-1, disposition 4 and 5) .

Six of the nine vapor-phase pesticides are considered by EPA to be PICs; one of the EPA PICs, pentachlorophenol (CAS No. 87-86-5) (Table G-1, disposition 6) , was found on the TWINS or BBI list during the WAC 173-460 TAPs revision evaluation and thus is retained as a WTP feed COPC (Appendix C). The other five were moved from feed to PICs to be measured in stack emissions (Table G-1, disposition 7 and 8). Of the remaining three constituents, one compound, 2,2-Dichloropropionic acid (CAS No. 7599-0), was removed in the WAC 173-460 TAPs revision evaluation. The other two were removed from the WTP COPC list since there is no record of their disposal to tanks or TWINS data indicating their presence in tank waste (Table G-1, disposition 9 and 10).

G.2 Other Adjustments

The RDQO listed total PCBs as a feed COPC; however, the RDQO optimization report (BNI 2004), Table 4-2, substituted individual aroclors for the total PCB analysis Appendix D. The individual aroclors are not expected to survive the WTP thermal processes as separate identifiable mixtures; they do not have air concentration limits; and there is insufficient information with which to evaluate them as individual

risk contributors. Instead, total PCBs analysis will be substituted as a feed COPC and the coplanar PCBs will be evaluated in stack emissions (Table G-1, disposition 11 and 12). The individual aroclors will be retained for analysis in the WTP waste feed; however, the higher value from the total PCB analysis or the aggregate sum of aroclors will be used for comparison to waste feed permitting limits. The aroclors are removed from consideration as feed inputs to emissions limits for air permitting or risk assessment purposes.

The RDQO optimization study substituted the measurement of pH for hydroxide. The measurement of pH will not provide additional information for the air permits and risk assessment. Therefore, the measurement of pH was removed (Table G-1, disposition 13). The measurement of pH will continue in the waste feed.

Total xylenes and three individual isomers of xylene compounds are included in the RDQO starting list of waste feed constituents; they also appear on the EPA PIC list (Appendix E). However, toxicity data is available only for total xylenes (CAS 1330-20-7). Therefore, the individual isomers were removed from both the feed and PIC COPC lists and total xylenes was moved from the EPA PIC list to the waste feed COPC list (Table G-1, disposition 14 and 15). Analytical measurements of the individual isomers of xylene will be made, as needed using broad scan sampling and analytical techniques, to determine total xylenes. Determining concentrations of individual isomers of xylene will not add additional information and they were removed from the PIC COPC list.

Dibenzo(a,h)fluoranthene was originally named a constituent of potential concern based on its inclusion as a PIC in the HHRAP (EPA 1998). The compound was listed without a CAS number and physical and toxicological data could not be found. Investigations concluded that a compound with this nomenclature could not structurally exist. WTP recommended eliminating dibenzo(a,h)fluoranthene as a COPC. Ecology and EPA concurred with this recommendation in March 2005 (CCN 139144) (Table G-1, disposition 16).

Although methyl isocyanate (CAS No. 624-83-9) was previously removed as a waste feed constituent by the RDQO optimization study, it also appears as an EPA PIC. This constituent was retained as an EPA PIC COPC (Table G-1, disposition 17).

Hexavalent chromium (CAS No: 18540-29-9) is included on the EPA PIC list. However, total chromium is measured in WTP waste feed and all chromium emissions are treated as hexavalent chromium for risk assessment and air permitting purposes. Therefore, stack measurement of hexavalent chromium will not add information and it was deleted (Table G-1, disposition 18).

Ozone and carbon dioxide are emitted during WTP facility operations as a result of the melter and control device operations. The emission of neither compound can be controlled at the WTP. Ozone is very reactive and will readily oxidize other constituents emitted by WTP. Carbon dioxide forms as a result of various oxidization processes. WTP will qualitatively evaluate the effect of the emission of these two compounds (Table G-1, disposition 19).

G.3 References

CCN 097844. *Discuss and Resolve the Outstanding Risk Assessment Issues in the Risk Assessment Work Plan (RAWP),* Meeting Minutes from 9 September 2004 between WTP, US Environmental Protection Agency, Region 10, and Washington State Department of Ecology, in Seattle, Washington.

CCN 139144. *Removal of Dibenzo(a,h)fluoranthene from RAWP COPC List*, E-mail communication from Jerry Yokel, Washington State Department of Ecology, to John Cook, WTP, 30 March 2005.

CCN 170036, *Environmental Risk Assessment Discussions*, Meeting Minutes, March 18, 2009.

WAC 173-460. *Controls for New Sources of Toxic Air Pollutants*, Washington Administrative Code, Olympia, Washington.

Table G-1 Modifications to WTP COPC List

CAS #	Constituent	Disposition Code [a]
100-25-4	1,4-Dinitrobenzene	1
319-85-7	beta-BHC	1
58-89-9	gamma-BHC (Lindane)	1
205-82-3	Benzo[j]fluoranthene	2
72-43-5	Methoxychlor	2
72-55-9	4,4-DDE	2
205-99-2	Benzo(b)fluoranthene	3
207-08-9	Benzo(k)fluoranthene	3
218-01-9	Chrysene	3
56-55-3	Benzo(a)anthracene	3
309-00-2	Aldrin	4
60-57-1	Dieldrin	4
72-20-8	Endrin	4
8001-35-2	Toxaphene	4
88-85-7	2-sec-Butyl-4,6-dinitrophenol; syn Dinoseb	4
1582-09-8	Trifluralin *	5
1836-75-5	Nitrofen	5
319-86-8	delta-BHC	5
50-29-3	4,4-DDT	5
72-54-8	4,4-DDD	5
93-72-1	Silvex (2,4,5-TP)	5
93-76-5	2,4,5-T	5
118-74-1	Hexachlorobenzene	6
87-86-5	Pentachlorophenol	6
319-84-6	alpha-BHC	7
76-44-8	Heptachlor	7
82-68-8	Pentachloronitrobenzene (PCNB)	7
94-75-7	2,4-D and esters	8
465-73-6	Isodrin	9
2385-85-5	Mirex	10
75-99-0	2,2-Dichloropropionic acid *	10
1336-36-3	Polychlorinated biphenyls (PCBs)	11
11096-82-5	Aroclor-1260	12
11097-69-1	Aroclor-1254	12
11104-28-2	Aroclor-1221	12
11141-16-5	Aroclor-1232	12
12672-29-6	Aroclor-1248	12
12674-11-2	Aroclor-1016	12
53469-21-9	Aroclor-1242	12
N/A	pH	13
1330-20-7	Xylene (total)	14
106-42-3	p-Xylene	15
108-38-3	m-Xylene	15
95-47-6	o-Xylene	15

Table G-1 Modifications to WTP COPC List

CAS #	Constituent	Disposition Code [a]
N/A	Dibenzo(a,h)fluoranthene	16
624-83-9	Methyl isocyanate	17
18540-29-9	Chromium (hexavalent)	18
10028-15-6	Ozone	19
124-38-9	Carbon dioxide	19

[a] Disposition Code:

1 Particle-bound RDQO COPCs; move to EPA PIC (CCN 097844).
2 Particle-bound low-toxicity COPCs; move to EPA PIC (CCN 097844).
3 Particle-bound low-toxicity feed COPCs; proposed to manage as EPA PICs (CCN 097844); found in TWINS/BBI and retained as feed COPCs.
4 Particle-bound RDQO COPCs; eliminate (CCN 097844).
5 Particle-bound low-toxicity COPCs; eliminate (CCN 097844).
6 Vapor-phase RDQO COPCs; proposed to move to EPA PIC (CCN 097844); found in TWINS or BBI and retained as feed COPC.
7 Vapor-phase RDQO COPCs; move to EPA PIC (CCN 097844).
8 Vapor-phase low-toxicity feed COPCs; move to EPA PIC (CCN 097844).
9 Vapor-phase RDQO COPCs; eliminate (CCN 097844).
10 Vapor-phase low-toxicity feed COPCs; eliminate (CCN 097844).
11 Move total PCBs from EPA PIC to feed COPC to substitute for aroclors (CCN 170036).
12 Delete aroclors from WTP feed COPC list (CCN 170036)
13 pH Removed; doesn't add useful information for risk assessment or air permitting.
14 Substitute total xylenes for individual isomers as a WTP feed COPC; remove from the EPA PIC list (CCN 170036).
15 Delete individual isomers of xylene from WTP feed list; substitute total xylenes; although they also appear as EPA PICs do not add to the PIC list (CCN 170036).
16 Removed by agreement with Ecology (CCN 139144).
17 Constituent removed by Optimization Study appears on EPA PIC list and retained.
18 Hexavalent chromium removed; total chromium treated as if it's hexavalent for risk assessment and air permitting; doesn't add useful information for risk assessment or air permitting.
19 Address qualitatively (CCN 170036).

[b] These compounds evaluated as part of the WAC 173-460 TAPs revision analysis and removed.

N/A = no CAS number available.

R10613467

Document title: **Integrated Emissions Baseline Report for the Hanford Tank Waste Treatment and Immobilization Plant**

Contract number: DE-AC27-01RV14136

Department: Process Engineering

ISSUED BY
RPP-WTP PDC

Author(s): E Berríos

Principal author signature:

Document number: 24590-WTP-RPT-PO-03-008, Rev 2

Checked by: S Saunders

Checker signature:

Date of issue: 23 February 2006

Issue status: Approved

Approved by: J Chiaramonte

Approver's position: Supervisor, Process Engineering

Approver signature:

Best Available Copy

Please note that source, special nuclear, and byproduct materials, as defined in the Atomic Energy Act of 1954 (AEA) are regulated at the U. S. Department of Energy (DOE) facilities exclusively by DOE acting pursuant to its AEA authority. DOE asserts that pursuant to AEA, it has sole and exclusive responsibility and authority to regulate source, special nuclear, and byproduct materials at DOE-owned nuclear facilities. Information contained herein on radionuclides is provided for process description purposes only.

River Protection Project
Waste Treatment Plant
2435 Stevens Center Place
Richland, WA 99352
United States of America
Tel: 509 371 2000

History Sheet

Rev	Date	Reason for revision	Revised by
0	30 May 2003	Initial issue. This document supercedes all previously issued integrated emissions baseline reports, including *Integrated Emissions Baseline Report for the River Protection Project Waste Treatment Plant* (RPT-W375-ES00001, Rev 2), and Integrated *Emissions Baseline Report Update* (24590-WTP-RPT-PT-02-002, Rev 2). This document reflects a 2 LAW and 2 HLW melter configuration.	E Berríos/J Cook
1	23 January 2004	Update to reflect the following design changes: technetium ion exchange deletion, and HLW and LAW offgas rearrangement. New process data based on R&T tests has also been incorporated along with the addition of two toxic air pollutants. Section 1 provides details of all the changes. No revision bars are shown due to extensive updates.	E Berríos
2	23 February 2006	Update to reflect the following changes: • Design o Deletion of HLW CRV o Pretreatment vessel vent design update to mitigate hydrogen generation o PJM/RFD design update to mitigate mixing issues • Data Reconciliation o Updated LAW and HLW glass formulation based on R&T test results o Equipment DFs updates based on R&T test results, engineering calculations, and vendor information • Air Emissions Bases o Updated inorganic and radionuclide constituents feed vector o Updated organic constituents feed vector o Updated constituents Fv values o Updated COPC list Also added sections in write-up that discuss detailed modeling approach and comparison to baseline cases. Section 1 provides details of all the changes. No revision bars are shown due to extensive updates.	E. Berríos

Contents

Acronyms and Abbreviations vi
Executive Summary viii
1 Introduction 1
1.1 Design Changes 1
1.2 Design Bases Update and R&T Data Reconciliation 1
1.3 Air Emissions Sources 5
2 WTP Process Configuration 7
2.1 General Description 7
2.2 Pretreatment Overview 7
2.3 LAW Vitrification Overview 8
2.4 HLW Vitrification Overview 9
2.5 Air Emissions Objective 10
3 Constituents of Potential Concern 10
4 Analysis Tool 11
5 Representative Constituents in the Emissions Analysis 12
5.1 Selection of Representative Hazardous Feed Organic COPCs 12
5.2 Selection of Representative Inorganic, Radionuclide, and Criteria Pollutant COPCs 13
5.3 Application of Representative Organic COPCs 14
5.4 Application of Representative Inorganic and Radionuclide COPCs 14
6 Process Flowsheet Conditions 16
7 Flowsheet Description and Emissions Analysis 16
7.1 Flowsheet Description 16
7.2 Emissions Analysis 17
8 Emissions Analysis Bases 22
8.1 Throughput and Operating Conditions 22
8.2 Feed Concentration for Organic Compounds 23
8.3 Feed Concentrations for Inorganic and Radionuclide Compounds 25
8.4 Concentration of Products of Incomplete Combustion 27
8.5 Phase Allocation of Constituents of Potential Concern 28
8.6 Equipment Decontamination Factors 29
9 Summary of Emissions Analysis Results 30
9.1 WTP Baseline Air Emissions Results 30
9.2 Additional Hazardous Feed Organic COPCs Air Emissions 32

9.3 Baseline Air Emissions Comparison to Baseline Envelopes A/D, B/D, and C Expected Air Emissions 32

10 References 33

10.1 Project Documents 33

10.2 Codes and Standards 34

10.3 Other Documents 35

Appendices

Appendix A Selected Stream-Specific Reports from the Steady State Flowsheet Model ... A-i

Appendix B Calculation: Estimation of Non-SSFM Represented Organic Emission Rates Required to Support the Integrated Emissions Baseline Report 24590-WTP-M4C-FRP-00005, Rev C ..... B-i

Appendix C Calculation: Integrated Emissions Baseline Report Non-modeled Inorganic and Radionuclide Constituents Air Emission Rates Estimation 24590-WTP-M4C-FRP-00003, Rev D ..... C-i

Appendix D Calculation: WTP Air Emissions Hazardous Organic Constituents Feed Concentrations 24590-WTP-M4C-FRP-00006, Rev B ..... D-i

Appendix E Calculation: WTP Air Emissions Inorganic and Radionuclide Constituents Feed Vector 24590-WTP-M4C-FRP-00001, Rev 0D ..... E-i

Appendix F Report: Air Emissions Estimation of Products of Incomplete Combustion for the Hanford Tank Waste Treatment and Immobilization Plant 24590-WTP-RPT-PO-05-007, Rev 1 ..... F-i

Appendix G Update 2: Vapor Phase Partitioning Coefficients CCN 129507 ..... G-i

Appendix H Organic Abatement DFs in Pretreatment PVP System ..... H-i

Appendix I Air Emissions Basis for Additional Identified Hazardous Organics Constituents in the Hanford Tank Farms CCN 128557 ..... I-i

Tables

Table 1 List of Process Flow Diagrams 36

Table 2 List of Organic COPCs and PICs 37

Table 3 List of Inorganic COPCs and Criteria Pollutants 47

Table 4 List of Radionuclide COPCs 49

Table 5 Representative Compounds for Inorganics and Radionuclides 50
Table 6 Estimated Organic Feed Concentrations 51
Table 7 Estimated LAW Feed Characterization 58
Table 8 Estimated HLW Feed Characterization 60
Table 9 Summary of Assumed Stack Concentrations for PICs 62
Table 10 Pretreatment Process Vessel Vent Entrainment Factors 63
Table 11 Pretreatment Emissions Analysis Evaporators and Condensers Decontamination Factors 64
Table 12 Pretreatment Emissions Analysis Equipment Decontamination Factors 66
Table 13 Summary of Pretreatment Offgas Treatment Equipment DFs for Organic COPCs 68
Table 14 LAW Vitrification Emissions Analysis Equipment Decontamination Factors 74
Table 15 HLW Vitrification Emissions Analysis Equipment Decontamination Factors 78
Table 16 Summary of LAW and HLW Vitrification Offgas Treatment Equipment DFs for Organic COPCs 82
Table 17 Summary of Organic Constituents Emission Rates for the WTP 87
Table 18 Estimated Inorganic COPC Emissions 93
Table 19 Estimated Radionuclide COPC Emissions 95
Table 20 WTP PIC Emissions 96
Table 21 Air Emissions for Additional Organic COPCs 99
Table 22 Radionuclide COPC Air Emissions Comparison 100
Table 23 Inorganic COPCs Air Emissions Comparison 103

Figures

Figure 1 Simplified WTP Process Overview 108
Figure 2 Simplified Pretreatment Process Flowsheet 109
Figure 3 Simplified Pretreatment Process Flowsheet 110
Figure 4 Simplified LAW Vitrification Process Flowsheet 111
Figure 5 Simplified HLW Vitrification Process Flowsheet 112
Figure 6 Emissions Estimate Objectives 113

Acronyms and Abbreviations

ACM	Aspen Custom Modeler
BBI	best basis inventory
bp	boiling point
CAS	Chemical Abstracts Service
COPC	constituent of potential concern
CRV	concentrate receipt vessel
DF	decontamination factor
Ecology	Washington State Department of Ecology
EPA	US Environmental Protection Agency
ETF	Effluent Treatment Facility
HEME	high-efficiency mist eliminator
HEPA	high-efficiency particulate air (filter)
HLW	high-level waste
IHLW	immobilized high-level waste
ILAW	immobilized low-activity waste
LAW	low-activity waste
LERF	Liquid Effluent Retention Facility
MFPV	melter feed preparation vessel
MFV	melter feed vessel
MW	molecular weight
NO_x	nitrogen oxides
PAH	polycyclic aromatic hydrocarbon
PCB	polychlorinated biphenyl
PF	performance factor
PFD	process flow diagram
PIC	product of incomplete combustion
PJM	pulse-jet mixer
PTF	pretreatment facility
R&T	research and technology
RF	release fraction
RFD	reverse flow diverter
SBS	submerged bed scrubber

SCFM	standard cubic feet per minute
SCR	selective catalytic reducer
SOW	statement of work
SO_x	sulfur oxides
SSFM	steady state flowsheet model
SVOC	semivolatile organic compound
TOC	total organic carbon
TRU	transuranic elements
TWINS	Tank Waste Information Network System
VSL	Vitreous State Laboratory
WESP	wet electrostatic precipitator
WTP	Hanford Tank Waste Treatment and Immobilization Plant

Executive Summary

The Hanford Tank Waste Treatment and Immobilization Plant (WTP) is designed to vitrify radiochemical waste composed primarily of inorganic salts and oxides, with smaller amounts of organics and radionuclide constituents. An engineering estimate of stack emissions is necessary to facilitate preparation, maintenance, and approval of air permits required for construction and operation of the WTP. The emissions information will also be used to support human health and ecological risk assessment.

The previous version of this report contained estimated emission rates for 470 organic, inorganic, and radionuclide constituents of potential concern (COPCs) from the WTP. The emission rates were estimated using the steady state flowsheet model (SSFM), ACM (Aspen Custom Modeler). This report supercedes earlier reports and reflects emission estimates that are consistent with current regulatory permitting assumptions and aligned with WTP design evolution and research and technology (R&T) data reconciliation.

The following summarizes the report results:

- Based on approved changes to the COPC list, this report now provides air emissions estimates for 456 COPCs. These changes include reducing feed hazardous organic constituents from 250 to 219 and increasing PIC constituents from 120 to 135.
- Estimated emission rates for 219 hazardous organic feed constituents, 135 organic products of incomplete combustion (PICs), 49 inorganic constituents, 46 radionuclide constituents, 5 criteria pollutants, and 2 added toxic air pollutants have been predicted. These emissions are associated with two pretreatment process flues, one low-activity waste (LAW) vitrification process flue, and three high-level waste (HLW) vitrification process flues. Pretreatment, LAW, and HLW cell flues are not part of the scope of this document.
- Predicted emission rates for all 456 COPCs are conservative and bound the emissions of two LAW melters with expanded capacity and two HLW melters. The concentration of the hazardous organic constituents in the feed utilized for this analysis is 189 times greater than detected concentrations or the detection limit of an actual Hanford tank sample collected from a high organic-bearing waste. The inorganic and radionuclide feed bases are also conservative.
- The WTP baseline steady state flowsheet version 3.1 was used to produce this emissions profile. This flowsheet represents the WTP's latest design bases and R&T information as of 23 December 2005. Section 1 provides an overview of the changes since the previous revision of this document.
- R&T data from testing at the Vitreous State Laboratory was used to estimate generation rates of PICs from all three facilities. The PIC emission rates were calculated on the basis that these constituents are present in the stack at an upper analytical detection limit.
- Evaporator partitioning and organic vessel vent emissions were predicted from known liquid-phase concentrations using vapor-liquid equilibrium. Henry's Law constants for 219 organic compounds in the feed were compiled for the vapor-liquid equilibrium calculations. Use of Henry's Law method is considered conservative as it is assumed that organic constituents reach full equilibrium between the liquid and vapor phase.
- Emission rates for 11 additional potential hazardous feed organic COPCs are provided for initial evaluation. These constituents have not been officially added to the WTP air permitting and risk assessment scopes. These results are provided in Section 9.

1 Introduction

Since the release of Revision 1 of this report, there have been significant design and bases changes that affect the Hanford Tank Waste Treatment and Immobilization Plant (WTP) air emissions generation. This new information is reflected in this updated profile. The data from this profile will supplement the update of the WTP's risk assessment analysis and air permits.

The changes that have occurred can be categorized as design changes, bases changes, research and technology (R&T) data reconciliation, and air emissions bases changes. All these changes, which are reflected in this new emissions profile, are addressed in the following text. These changes reflect the WTP project's design as of 23 December 2005.

1.1 Design Changes

1.1.1 Pretreatment Facility (PTF)

- Airflows for the pulse-jet mixers (PJMs) and reverse flow diverters (RFDs) were updated to accommodate new mixing requirements for non-Newtonian fluids. It has been assumed for the air emissions flowsheet evaluations that all PJM/RFDs operate at the same time and therefore contribute simultaneously to the PJM/RFD main header. This provides bounding releases from the PTF PJM/RFD stack.
- Purge air requirements for the pretreatment vessel vents system were updated to reflect a new strategy to mitigate hydrogen generation in the facility. It has been assumed for the air emissions flowsheet evaluations that all PTF vessels operate at the same time thus providing bounding air emission rates from the PTF vessel vents.

1.1.2 Low-Activity Waste (LAW) Facility

- Activated carbon beds are the main abatement technology for ^{129}I and acid gases (HF, HCl). The caustic scrubber remains the main abatement unit for sulfur oxides (SO_x) and has incidental removal of ^{129}I, acid gases, and nitrogen oxides (NO_x) conservatively assumed to be 10 %.

1.1.3 High-Level Waste (HLW) Facility

- The concentrate receipt vessels (CRVs) were deleted to mitigate non-Newtonian fluid mixing issues.
- PJM/RFD airflow rates were updated to reflect new mixing requirements. It has been assumed in this flowsheet evaluation that all PJM/RFDs operate at the same time and therefore contribute simultaneously to the PJM/RFD main header. This provides bounding releases from the HLW PJM/RFD stack.

1.2 Design Bases Update and R&T Data Reconciliation

1.2.1 Pretreatment Facility

- Decontamination factors (DFs) were updated for some constituents per the latest engineering data and/or vendor information.

- Vessel vent split fractions were updated to reflect the latest design basis.

1.2.2 LAW Facility

- Ammonia slip from the selective catalytic reducer (SCR) was updated with a limit of 78 ppmv per the latest vendor information. An ammonia dilution air amount of 700 standard cubic feet per minute (SCFM) was also incorporated.
- LAW glass formulation was updated to account for glass and process limitations.
- DFs were updated for some constituents per the latest R&T data and/or vendor information.

1.2.3 HLW Facility

- Ammonia slip from the SCR was updated with a limit of 10 ppmv per the latest vendor information. An ammonia dilution air amount of 200 SCFM was also incorporated.
- HLW glass formulation was updated to account for glass and process limitations.
- DFs were updated for some constituents per the latest R&T data and/or vendor information.

1.2.4 General Air Emissions Bases Update

1.2.4.1 Inorganic and Radionuclide Constituents Feed Vector

Previous air emissions estimates for inorganic and radionuclide constituents were based on Rev 0A of the *WTP Air Emissions Inorganic and Radionuclide Constituents Feed Vector* (24590-WTP-M4C-FRP-00001). Since this revision, the calculation has been updated to include changes to the Statement of Work (SOW) maximum concentrations and best basis inventory (BBI) data. This updated feed vector was tested in the air emissions flowsheet. Based on the results of the test run it was determined that the nature of the feed vector (all constituents at their maximum concentration) was not providing bounding conditions for air emissions purposes. Extensive R&T data reconciliation has been incorporated into the WTP flowsheet since 2004. Part of this data reconciliation includes glass formulation updates, glass quality constraints, and process constraints. Having a feed vector with all constituents at maximum concentrations activates a significant amount of these constraints, which in turn causes the feed to be diluted within the process and dramatically reduces the feed rate into the front end of the process.

Based on these findings, sensitivity runs were performed that tested different feed vector scenarios to determine which case would provide the bounding conditions. The scenarios tested included the following:

- Average inorganic and radionuclide concentrations (documented in *Evaluation of Air Emissions Feed Vector Scenarios* [24590-WTP-MRQ-PO-05-0044])
- Average inorganic and maximum radionuclide concentrations (documented in 24590-WTP-MRQ-PO-05-0044)
- Typical Envelope A feed at air emissions conditions (documented in *Steady State Flowsheet (ACM) Baseline Envelopes A/D, B/D, and C Runs for Air Emissions Comparison* [24590-WTP-MRR-PO-05-020])
- Typical Envelope B feed at air emissions conditions (documented in 24590-WTP-MRR-PO-05-020)

- Typical Envelope C feed at air emissions conditions (documented in 24590-WTP-MRR-PO-05-020)

All the results from these scenarios where analyzed against the previous air emissions results presented in Rev 1 of this report. After careful evaluation, it was concluded that average inorganic and maximum radionuclide constituents feed concentrations provide reasonable bounding conditions for the WTP air emissions, and therefore these were selected as the feed vector to be used for this air emissions estimate. The development of this feed vector has been documented in Rev 0D of 24590-WTP-M4C-FRP-00001.

1.2.4.2 Organic Constituents

1.2.4.2.1 Deletion and Rearrangement of Constituents

A total of 250 hazardous feed organic constituents were originally scoped for analysis under the WTP air emissions profile. Since then, the hazardous organic constituents list has been updated, in agreement with the regulatory agencies, and the number of hazardous organic constituents in the feed has been reduced to 219 (CCN 097844). Updates to this list included deletion of pesticides and herbicides and reclassification of feed constituents to products of incomplete combustion (PICs). The affected constituents under these changes are the following:

- Constituents (herbicides and pesticides) deleted from the COPC list:
  - 1582-09-08 Trifluralin
  - 1836-75-5 Nitrofen
  - 2385-85-5 Mirex
  - 309-00-2 Aldrin
  - 319-86-8 Delta-BHC
  - 465-73-6 Isodrin
  - 50-29-3 4,4'-DDT
  - 60-57-1 Dieldrin
  - 72-20-8 Endrin
  - 72-54-8 4,4'-DDD
  - 75-99-0 2,2 Dichloropropionic Acid
  - 8001-35-2 Toxaphene
  - 88-85-7 2-sec-butyl-4,6-dinitrophenol (Dinoseb)
  - 93-72-1 Silvex (2,4,5-TP)
  - 93-76-5 2,4,5-T

- Constituents deleted from the feed organic list and moved to the PIC list:
  - 100-25-4 1,4-Dinitrobenzene
  - 118-74-1 Hexachlorobenzene
  - 205-82-3 Benzo(j)fluoranthene
  - 205-99-2 Benzo(b)fluoranthene
  - 207-08-9 Benzo(k)fluoranthene
  - 218-01-9 Chrysene
  - 319-84-6 Hexachlorocyclohexane (Lindane) Alpha BHC
  - 319-85-7 Hexachlorocyclohexane (Lindane) Beta BHC
  - 56-55-3 Benzo(a)anthracene

- 58-89-9 gamma-BHC (Lindane)
- 72-43-5 Methoxychlor
- 72-55-9 4,4'-DDE
- 76-44-8 Heptachlor
- 82-68-8 Pentachloronitrobenzene (PCBN)
- 87-86-5 Pentachlorophenol
- 94-75-7 2,4-D and Esters (160C typed)

Emission rates for these constituents are now calculated in the *Air Emissions Estimation of Products of Incomplete Combustion for the Hanford Tank Waste Treatment and Immobilization Plant* (24590-WTP-RPT-PO-05-007).

Changes to the analyzed organic COPCs are documented in CCN 097844 and in the *Regulatory Data Quality Objectives Optimization Report* (24590-WTP-RPT-MGT-04-001). These changes reduced the number of hazardous organic constituents in the feed from 250 to 219.

1.2.4.2.2 Feed Vector

Based on the organic COPC changes, the feed concentrations calculation for the organic constituents was updated. During this update, instead of using the previously assumed 4 wt% total organic carbon (TOC) in the feed, the maximum TOC expected (with added contingency) for the tanks analyzed in the *WTP Air Emissions Hazardous Organic Constituents Feed Concentrations* (24590-WTP-M4C-FRP-00006) was selected (calculated to be 2.5 %). In addition, the detection limits were updated, as necessary, based on recent available R&T data and the *Regulatory Data Quality Objectives Optimization Report* (24590-WTP-RPT-MGT-04-001). All these changes are documented in the *WTP Air Emissions Hazardous Organic Constituents Feed Concentrations* (24590-WTP-M4C-FRP-00006).

1.2.4.2.3 Steady State Flowsheet Model (SSFM) Modeled Constituents

Some of the feed constituents that were deleted or reclassified as PICs were used as representative constituents in the SSFM. Those deleted or reclassified were replaced with new constituents so that air emission rates calculations for those non-modeled constituents could be performed. The deleted modeled constituents include:

- 118-74-1 Hexachlorobenzene
- 218-01-9 Chrysene
- 309-00-2 Aldrin
- 319-85-7 Hexachlorocyclohexane (Lindane) Beta BHC
- 58-89-9 gamma-BHC (Lindane)
- 60-57-1 Dieldrin
- 76-44-8 Heptachlor
- 8001-35-2 Toxaphene
- 87-86-5 Pentachlorophenol
- 88-85-7 2-sec-Butyl-4,6-dinitrophenol (Dinoseb)

The new modeled constituents used to substitute for the deleted constituents are:

- 101-84-8 Diphenyl ether
- 1321-64-8 Pentachloronaphthalene
- 193-39-5 Indeno(1,2,3-cd)pyrene
- 206-44-0 Fluoranthene
- 26140-60-3 Terphenyls
- 3697-24-3 5-Methylchrysene
- 59-89-2 N-nitrosomorpholine
- 621-64-7 Di-n-Propylnitrosamine
- 64-19-7 Acetic acid
- 83-32-9 Acenaphthene
- 95-50-1 o-Dichlorobenzene

1.2.4.2.4 F_v values

Based on CCN 129507, F_v values were updated due to reconciliation of new regulatory data. F_v is a unitless parameter used to classify a constituent as being in one of three categories: vapor phase, particle phase, or particle-bound phase. This phase type affects the removal efficiency of the offgas control system for that compound. An F_v value of 1 indicates that the constituent exists only in the vapor phase. An F_v value of less than 1, for example 0.9, means that 90 % of the compound exists in the vapor phase and 10 % is particle-bound (i.e., [1-0.9]*100%). Therefore, removal efficiency for the particulate and vapor phase portions of the constituent will differ based on the phase except in operations such as the thermal oxidizers and carbon beds where removal efficiency is independent of phase type. An F_v value of less than 0.05 indicates that the constituent exists only in the particle phase.

1.3 Air Emissions Sources

The intent of this emissions estimate is to arrive at appropriately realistic and conservatively bounded emission rates that rely upon defensible, documented assumptions. The emission rates at the process flues are referred to in this document as *abated emissions*. This document also presents unabated emission rates. These unabated emission rates correspond to the emission rates of COPCs at generation points in the process. This document provides the methods and assumptions for arriving at the emission rates from the emission sources addressed below.

1.3.1 Pretreatment Facility

Pretreatment emission sources consist of the following:

- Unabated emissions from the evaporator offgases, vessel vent exhaust, and exhaust from the RFDs and PJMs. Unabated air emissions for evaporator offgas and vessel vent exhaust are represented by stream PVP01. For the PJM/RFD exhaust, the unabated air emissions are represented by stream PJV04.

- Abated emissions from the pretreatment offgas treatment system. Abated emissions for the evaporators and vessel vents are represented by stream PVP12. For the PJM/RFD exhaust, the abated emissions are represented by stream PJV11.

1.3.2 LAW Vitrification

LAW vitrification emission sources are:

- Feed to the LAW melter (except for organic constituents as this information is not required for risk assessment analysis or air permit evaluation). This composition is represented by stream LFP04.
- Unabated emissions from the LAW melter. This composition is represented by stream LMP06. This stream represents the unabated emission rates from both LAW melters.
- Unabated emissions from LAW vessel vents. This composition is represented by stream LVP01.
- Abated emissions from the LAW melter offgas treatment systems, including vessel vents. This composition is represented by stream LVP18.

1.3.3 HLW Vitrification

HLW vitrification emission sources are made up of the following:

- Feed to the HLW melter (except for organic constituents as this information is not required for risk assessment analysis or air permit evaluation). This composition is represented by stream HFP03.
- Unabated emissions from the HLW melter and PJM/RFD exhaust. For the HLW melter, the unabated air emissions are represented by stream HMP06. This stream represents the unabated air emission rates for both HLW melters. For the PJM/RFD exhaust, the unabated air emissions are represented by stream PJV32.
- Unabated emissions from HLW vessel vents. This composition is represented by stream HOP10.
- Abated emissions from the HLW melter offgas, vessel vents, and RFD/PJM exhaust offgas treatment systems. The abated emissions for the HLW melter offgas and vessel vents are represented by stream HOP31. The PJM/RFD abated emissions are represented by stream PJV34. Stream HOP31 represents the air emission rates for both HLW melter offgas systems.

This document is structured as outlined below:

- Section 2 provides an overview of the WTP process.
- Sections 3, 4, and 5 identify the COPCs evaluated and describe the SSFM, the primary tool used for the evaluation.
- Sections 6, 7, and 8 provide the flowsheet conditions, flowsheet structure, and bases for the emissions profile generation.
- Section 9 provides a summary of the emissions estimates and a complete analysis that compares the WTP baseline air emissions developed in this report to baseline air emissions for Envelopes A/D, B/D, and C.
- Appendix A contains SSFM stream-specific report output for unabated, abated, and feed points in the WTP process for all modeled constituents. The rest of the appendices provide supporting

documentation for the emissions profile generated. These appendices are referenced throughout the document.

2 WTP Process Configuration

2.1 General Description

Table 1 lists the process flow diagrams (PFDs) that establish the basis for this updated emissions flowsheet and analysis. Figure 1 provides a simplified overview of the WTP process. In Figure 1, the movement of low-activity and high-level waste can be traced from a starting point in the DOE double-shell tank system (shown in the lower-left corner of the diagram) through the various pretreatment unit operations (including feed evaporation, ultrafiltration, and cesium ion exchange) and into the LAW and HLW melter systems. The treatment of offgas resulting from operations of the pretreatment and melter processes (including RFD and pulse-jet mixing and vessel ventilation of vessels not individually depicted on the diagram) can also be traced to a point source emission location in the pretreatment, LAW vitrification, or HLW vitrification stack. The diagram has shading to distinguish the offgas treatment steps from other process operations.

Figures 2, 3, 4, and 5 provide a more detailed depiction of the WTP process. Figures 2 and 3 focus on the pretreatment processes and vessels. Figures 4 and 5 show the LAW vitrification and HLW vitrification processes, respectively. The figures show the configuration of major system components and include selected stream names that correspond to stream identifiers in the SSFM. Figure 2, for example, shows stream FRP14 coming from the double-shell tanks into the HLW feed receipt vessel. Stream FRP14 is the unique identifier in the SSFM that corresponds to the HLW feed vector established for the emission estimate. Sections 8.2 and 8.3 include additional details on the assumed composition and basis for this feed stream. General process descriptions for the three main WTP facilities are provided below.

2.2 Pretreatment Overview

The Hanford tank farm contractor transfers waste from the waste tanks to the WTP PTF. LAW Envelopes A, B, and C are transferred to the WTP as solutions that contain dissolved and suspended solids (LAW precipitated salts). HLW undissolved solids (Envelope D) are transferred as slurry to the PTF.

Low sodium concentration (< 5 molar) waste received from the tank farms and some low sodium concentration recycle streams from the pretreatment and vitrification facilities are concentrated in the waste feed evaporator. Normally, the sodium concentration from the waste feed evaporator is about 5 molar sodium. However, other processing constraints (for example, undissolved solids concentration and slurry-specific gravity) may require a lower sodium concentration.

When the sodium concentration is acceptable for further processing (either as received or after evaporation), the waste goes through the following processes:

- LAW Envelopes A or B are blended with HLW feeds (Envelope D) in an ultrafilter preparation vessel. The ratio of LAW to HLW undissolved solids is established to support both immobilized low-activity waste (ILAW) and immobilized high-level waste (IHLW) glass production rates. The blended HLW and LAW feed streams are filtered to separate the LAW liquid stream (permeate) from the slurry. The LAW permeate then is processed through the ion exchange process discussed below.

The concentrated solids slurry is caustic leached (if warranted), washed, oxidative leached (if warranted) and blended with Cs concentrate from ion exchange and strontium (Sr) and transuranic (TRU) solids from ^{90}Sr/TRU precipitation (see below) before being transferred to the HLW vitrification facility.

- Envelope C feeds contain organic complexants that cause the Sr and some TRU waste to remain in the solution. This waste undergoes a ^{90}Sr/TRU precipitation process before filtration. The filtration step then separates the ^{90}Sr/TRU solids, manganese oxide solids (a byproduct from the precipitation process), and entrained solids from permeate (LAW stream). The ^{90}Sr/TRU precipitate is washed and stored for blending with HLW feed before HLW vitrification. The ^{90}Sr/TRU precipitate (Envelope C solids) is not caustic leached. Envelope C permeates are processed through the ion exchange processes.
- After filtration, the permeate undergoes ion exchange to remove ^{137}Cs. The ^{137}Cs eluate is concentrated by evaporation and then blended with pretreated HLW solids before transfer to the HLW vitrification process. The last step taken in the pretreatment facility is to concentrate the treated LAW liquid by evaporation prior to transferring to the LAW vitrification facility for processing .

The pretreatment building also contains a process vessel ventilation system, an offgas treatment system, and a stack. Liquid effluents are either recycled back into the facility or sent to the Hanford Site Liquid Effluent Retention Facility (LERF)/200 Area Effluent Treatment Facility (ETF). Figures 2 and 3 represent an overview of the pretreatment process.

2.3 LAW Vitrification Overview

Treated Envelope A, B, and C supernatants from pretreatment are transferred to the LAW vitrification facility for processing. The LAW vitrification process consists of two melter systems operated in parallel. Each melter system has a set of feed preparation vessels; a large-capacity, joule-heated ceramic melter; and an offgas treatment system. The facility also has a secondary offgas system shared by the two melter systems. The following description applies to each of the two LAW melter systems.

Pretreated LAW waste feeds are received into one of two common LAW concentrate receipt vessels inside the LAW vitrification building. Batches of concentrated LAW feed are transferred from these vessels to melter feed preparation vessels, where glass formers and sucrose are added and blended to form a uniform batch of feed to the LAW melters. The slurry feed is transferred to the melter feed vessels, where it is fed continuously to the LAW melters.

Each LAW melter is designed to operate at a facility design capacity rate of 15 metric tons per day of immobilized low-activity waste (ILAW). The feed enters the melter from the top and forms a cold cap above the melt pool. Volatile components in the feed are evaporated or decomposed, then drawn off through the melter offgas system. Nonvolatile components react to form oxides or other compounds dissolved in the glass matrix. Bubblers agitate the mixture to increase the glass production rate. An airlift system pours the glass from the melter into stainless steel containers. Each container holds about 6 metric tons of ILAW.

Each LAW melter system has its own primary offgas equipment, including a film cooler, submerged bed scrubber (SBS), and wet electrostatic precipitator (WESP). Particulates and condensables, including entrained or volatilized radionuclides in the melter offgas stream, are captured in the SBS and WESP. Condensables from the SBS and the WESP are collected in the liquid effluent system and recycled to the treated LAW evaporator in the pretreatment facility. The primary offgas systems join after the WESP,

and are routed to the secondary offgas system. At this point, the LAW vessel vent header joins the offgas. The secondary offgas system provides final filtration, removes mercury, destroys organics, reduces NO_x, and removes halides. This is done by using high-efficiency particulate air (HEPA) filters, activated carbon columns, a thermal catalytic oxidizer, a selective catalytic reducer, and a caustic scrubber. After being filled, each ILAW container cools for several days, then a lid is sealed to the top of the container and external contamination is removed by a CO_2 decontamination process. Figure 4 provides an overview of the LAW vitrification process.

The LAW container decontamination using CO_2 is not shown in Figure 4. Exhaust from this process is treated by the building's ventilation system, which is not part of this document's scope. No secondary wastes are generated from this decontamination process that are recycled within the plant.

2.4 HLW Vitrification Overview

The HLW vitrification facility receives the pretreated HLW feed from the pretreatment facility. Treated Envelope D slurry and the LAW intermediate waste products (separated ^{90}Sr/TRU and ^{137}Cs) make up the feed to the HLW vitrification facility. The HLW vitrification process consists of two joule-heated ceramic melters fed by independent feed and blending vessel trains, a dedicated offgas treatment system for each melter, and a common secondary effluent collection system. A common canister receipt system supplies canisters to separate melter pouring systems, providing immobilized high-level waste (IHLW) to a common product canister decontamination and export system. HLW feed concentrate is transferred from the pretreatment building to the HLW melter feed preparation vessels in the HLW vitrification building. Batches of HLW feed concentrate are transferred to one of the two melter feed preparation vessels. The feed concentrate is blended with glass-forming chemicals, and then mixed to ensure uniformity. The melter feed slurry is transferred to the melter feed vessel, where it can be fed to a dedicated HLW melter.

Each HLW melter is designed to operate at a facility design capacity rate of 3 metric tons per day of IHLW. The melter feed slurry is introduced at the top of the melter and forms a cold cap on the surface of the melt pool. Water and volatile components evaporate or decompose and are drawn off through the offgas system. Nonvolatile components react to form oxides, which become part of the molten glass.

Each HLW melter has a dedicated primary and secondary offgas system where the offgas from the melter passes through a film cooler, SBS, WESP, high-efficiency mist eliminators (HEMEs), and HEPA filters, to remove particulates and radionuclides. The offgas then passes through a secondary offgas system consisting of fans, activated carbon beds, recuperative heat exchangers, a silver mordenite column, a thermal catalytic oxidizer, and a selective catalytic reducer. This secondary system removes mercury and halides, destroys organics, and reduces NO_x.

An airlift system inside the melter pours molten IHLW glass into stainless steel canisters. The filled canister is then inspected, the glass sampled as necessary, and the canister sealed. The canisters from the two melters are decontaminated by a nitric acid/cerium (HNO_3/Ce^{+4}) chemical milling process that dissolves a thin layer of the canister outer wall material. Canister decontamination waste effluents are then recycled and transferred to the pretreatment building. The decontaminated canister is then swabbed remotely to determine contamination levels. If the surface contamination is within specification limits, the filled canister is transferred to the interim storage area, where it is stored before transfer to DOE. Figure 5 provides an overview of the HLW vitrification process.

2.5 Air Emissions Objective

Figure 6 graphically depicts the objectives of the emissions estimate. For this emissions estimate, it is assumed that the WTP feed streams contain 314 individual constituents of potential concern. An additional 135 products of incomplete combustion (PICs) plus 5 criteria pollutants and 2 toxic air pollutants that could be generated as a result of the treatment process are also considered. The resulting emission rates for 456 constituents from the pretreatment and vitrification processes are estimated.

3 Constituents of Potential Concern

This section provides the bases for selecting the COPCs analyzed in this report. The WTP emissions estimate scope includes 456 COPCs, which were identified through development of the *Environmental Risk Assessment Work Plan for the Hanford Tank Waste Treatment and Immobilization Plant* (24590-WTP-RPT-ENS-03-006). These COPCs were originally selected with consideration to guidance provided in the *Human Health Risk Assessment Protocol for Hazardous Waste Combustion Facilities* (EPA 2005), the *Screening Level Ecological Risk Assessment Protocol for Hazardous Waste Combustion Facilities* (EPA 1999b), and through interactions with the US Environmental Protection Agency (EPA) Region 10 and the Washington State Department of Ecology (Ecology).

The COPC selection criteria identified compounds that fell within one or more of the following categories:

- A compound with the potential to be emitted due to the presence of the compound or its precursors in the waste feed
- A compound that was potentially a product of incomplete combustion
- A compound potentially toxic to humans
- A compound with a propensity for bio-accumulating or bio-concentrating in human and ecological food chains

The 456 COPCs contain chemical and radionuclide constituents, and include compounds not known to be present at detectable concentrations in the actual waste. A total of 268 organic and inorganic chemical COPCs associated with WTP feed streams were identified. The chemical constituents are composed of 219 hazardous organic compounds and 49 inorganic compounds (see Section 5.2). An additional 135 organic PICs were identified as being potentially formed in the treatment process along with 5 criteria pollutants and 2 toxic air pollutants that are classified as acid gases (hydrochloric and hydrofluoric acids). Cl_2 is another toxic air pollutant to be considered. It is assumed in the WTP flowsheet that all gaseous chlorine generated in the offgas is in the form of HCl. This assumption is supported by R&T test results, which show that the dominant gaseous form of chlorine in the offgas system is HCl. The chemical COPCs were compiled using input from the following sources:

- *Regulatory Data Quality Objectives Supporting Tank Waste Remediation System Privatization Project* (Wiemers and others 1998)
- List of PICs identified in Table A.1 of *Human Health Risk Assessment Protocol for Hazardous Waste Combustion Facilities* (EPA 2005)
- Criteria pollutants regulated by the *National Primary and Secondary Ambient Air Quality Standards* (40 CFR 50)

Table 2 lists the 219 hazardous organic constituents and 135 organic PICs. Table 3 lists the 49 inorganic constituents, the five (5) criteria pollutants (NO_2 and NO are counted as one criteria pollutant), and the two (2) toxic air pollutants. In each table, the compounds are sorted using their unique Chemical Abstracts Service (CAS) registry number.

A total of 46 radionuclide constituents associated with WTP feed streams were identified. The radionuclide constituents were derived from Hanford's best basis inventory (BBI) and include 16 radionuclides identified as contributing greater than 99.99 % of the radioactivity in the tank waste (Kupfer 1999). Information used to establish the radionuclide inventory originated from key historical records, various chemical flowsheets used in reprocessing of irradiated Hanford Site reactor fuels, and calculations of radionuclide isotope generation and decay. Table 4 identifies the 46 radionuclide COPCs. Figure 6 shows a representation of the breakdown of all the COPCs.

Additional details on the selection of COPCs can be found in Section 4 of the *Environmental Risk Assessment Work Plan for the Hanford Tank Waste Treatment and Immobilization Plant* (24590-WTP-RPT-ENS-03-006).

Eleven (11) additional hazardous feed organic COPCs are being considered for addition to the scope of the WTP air permits and risk assessment. The air emissions analysis for these constituents is presented separately in this report (see Section 9). If it is agreed by WTP and the regulatory agencies to add these constituents to the WTP scope, they will be reflected as part of the total COPC list in later revisions of this report.

4 Analysis Tool

The emissions estimate was developed using the WTP baseline steady state flowsheet model (SSFM). This flowsheet represents the latest WTP design and is constantly being updated to include the latest design bases, requirements, and R&T testing results. The flowsheet tracks the main constituents that are expected to have the biggest effect on the material and energy balance of the plant. The constituents tracked in the flowsheet account for 125 of the constituents required to be analyzed, per Section 3. Thus, to facilitate the estimation of the rest of the unanalyzed constituents, several calculations were performed that determined these emission rates based on the results provided by the SSFM. Section 5 describes this process in detail.

The flowsheet tracks the partitioning of the constituents across the pretreatment and vitrification facilities, and provides a steady state representation of process stream compositions through the WTP. It provides an overall material and energy balance with time-averaged flow rates and makes it possible to apply the use of simple equipment DFs or more complicated thermodynamic calculations. The SSFM uses the Henry's Law concept to estimate releases of organic compounds from vessel vents within all facilities, and evaporator overheads.

The SSFM is separated into equipment-oriented areas that represent pretreatment and vitrification unit operations. Pretreatment consists primarily of evaporation, precipitation, ultrafiltration, and ion exchange separation processes. LAW and HLW vitrification consist of staging and preparation vessels to prepare the pretreated feed for vitrification. The pretreatment, LAW vitrification, and HLW vitrification unit operations also include offgas treatment, effluent, and recycle streams. In addition, the HLW facility

takes into account the recycle from the container decontamination system. Section 7 provides more detail on the flowsheet structure.

A verification and validation process is performed on each release version of the SSFM consistent with NQA-1 requirements and the WTP *Quality Assurance Manual* (24590-WTP-QAM-QA-01-001). This emissions estimate was performed on version 3.1 of the steady state flowsheet. Details on this version of the flowsheet can be found in the *Steady-State Flowsheet (ACM) Model Design Document* (24590-WTP-MDD-PR-01-003). Several adjustments were required to be implemented into version 3.1 of the SSFM to align it with the latest design changes and data reconciliation as presented in Sections 1.1 and 1.2. These changes are documented in the *Steady-State Flowsheet (ACM), 2005 Air Emissions Profile* (24590-WTP-MRR-PO-05-022).

5 Representative Constituents in the Emissions Analysis

To calculate the air emission rates for the remainder of the constituents not tracked in the SSFM, an approach for correlating the emission rates for compounds included in the SSFM with the remaining unanalyzed constituents was established with consideration to physical properties, chemical class, and feed concentration. This approach for selecting representative compounds and applying the SSFM results to determine the rate for constituents not tracked in the flowsheet is described in the following sections.

5.1 Selection of Representative Hazardous Feed Organic COPCs

A subset of the organic COPCs was selected to represent the larger list of organic COPCs in the SSFM. In total, 51 of the 219 organic feed COPCs were selected. The basis for selection of these compounds is discussed below. The SSFM was not used to estimate PICs as these were estimated in a separate report. The methodology for addressing PIC emissions is described in Section 8.4.

Henry's Law constants were compiled for all of the feed organics. The *Vessel Vents and PJM/RFD Emissions* (RPT-24590-EN00001) document shows the compilation process for these Henry's Law constants. These constants were divided into 29 groups based upon closeness of numerical values within a group. An additional 6 subgroups were added to differentiate between particle and vapor phase within assessment groups. Constituents from each of these groups were selected for analysis using the SSFM.

To supplement constituents selected based upon Henry's Law, additional compounds were selected based upon physical properties including boiling point (bp), offgas phase, and solubility. Specifically, the constituents' boiling points were classified as one of the following three groups:

- Volatile (bp < 100 °C)
- Semivolatile (100 °C < bp < 300 °C)
- Nonvolatile (bp > 300 °C)

The organic aqueous solubility was classified as one of the following two groups:

- Insoluble (solubility in water < 0.01 g per 100 mL)
- Slightly soluble/soluble (solubility in water ≥ 0.01 g per 100 mL)

Constituents representing the applicable combinations of these physical properties (such as semivolatile and insoluble compounds) were included in the analysis.

Several additional compounds were selected to ensure that each of the following 13 chemical families were represented:

- Aromatic halogenated hydrocarbons
- Aromatic non-halogenated hydrocarbons
- Non-aromatic non-halogenated hydrocarbons
- Non-aromatic halogenated hydrocarbons
- Dioxin and furan compounds
- Polychlorinated biphenyls (PCBs)
- Phthalates
- Light polycyclic aromatic hydrocarbons (PAHs); molecular weight (MW) less than 200 g/mole
- Heavy PAHs (MW greater than 200 g/mole)
- Light substituted benzene compounds (MW less than 200 g/mole)
- Other light semivolatile organic compounds (SVOCs) (MW less than 200 g/mole)
- Other heavy SVOCs (MW greater than 200 g/mole)

Table 2 identifies the organic COPCs that were selected for analysis using the SSFM based upon the criteria and rationale discussed above. The emissions rates for the non-modeled constituents were calculated using the results of the 51 tracked constituents. Methodology on how these rates were calculated is documented in the *Estimation of Non-SSFM Represented Organic Emission Rates Required to Support the Integrated Emissions Baseline Report* (24590-WTP-M4C-FRP-00005), which is included as Appendix B of this report.

5.2 Selection of Representative Inorganic, Radionuclide, and Criteria Pollutant COPCs

The radionuclide and inorganic constituents currently tracked in the steady state flowsheet comprise about 72 % of the total inorganic and radionuclide constituents included in the scope of the WTP air permits and environmental risk assessment. Specifically, the SSFM tracks 38 out of 49 of the inorganic constituents, 4 out of 5 criteria pollutants, 30 out of 46 radionuclide constituents, and the 2 toxic air pollutants (Cl_2 is tracked as HCl). Tables 3 and 4 identify the inorganic and radionuclide constituents that were analyzed with the SSFM. The emission rates for the constituents not modeled were calculated based on the results of the modeled constituents. The methodology used to document these rates is presented in the *Integrated Emissions Baseline Report Non-modeled Inorganic and Radionuclide Constituents Air Emission Rates Estimation* (24590-WTP-M4C-FRP-00003), which is included as Appendix C of this report.

Of all the inorganic and radionuclide constituents and criteria pollutants, the only ones that are not estimated for this analysis are ozone, bromide, and iodine (I_2). Ozone is usually produced by passing an electrical discharge through O_2 gas or through dry air. Based on current process design, ozone is not expected at the WTP and therefore is not presented in this emission estimate. The presence of bromide is known to lead to very rapid corrosion of carbon steel tanks. This constituent is prohibited from Hanford tank wastes, and no process history for its introduction exists. Bromide is therefore not presented in this emissions estimate. Based on Hanford Tank Farm historical data and data from the best basis inventory,

all iodine found in the tank wastes is classified as ^{129}I. Therefore, this air emissions estimate based the iodine inventory in the tanks as being entirely radioactive iodine-129 (^{129}I).

5.3 Application of Representative Organic COPCs

As stated in Section 5.1, the existing process and emissions analysis configuration is dependent on Henry's Law, boiling point, phase type, and, to a lesser extent, solubility. As intended by the grouping methods described above, constituents within the same organic group are expected to behave similarly in the process. Therefore, the emission rates for the non-modeled constituent are calculated based on the performance factor (PF) of the modeled constituent. This PF is calculated as follows:

$$PF = \frac{\text{mass rate at waste feed [representative compound]}}{\text{mass rate at point of interest [representative compound]}}$$

The *mass rate at the point of interest* refers to the mass rate of a representative compound at various points in the process train, such as at the plant stack or the unabated emission to each offgas treatment unit. The *mass rate at waste feed* refers to the mass rate of each representative compound in the SSFM analyzed waste feed. The mass rate for the waste feed in the above equation is the sum of HLW (stream FRP14) and LAW feed (stream FRP01) rates for the compound. The PF is assumed to be the same for the associated compounds that are not part of the baseline SSFM.

5.3.1 Estimation of Coplanar PCB Emissions

The feed organic compounds listed in Table 2 include 14 coplanar PCB congeners. Coplanar PCBs have four or more chlorine atoms with few substitutions in the ortho positions. The rings can rotate into the same plane if not blocked from rotation by ortho-substituted chlorine atoms and, in this coplanar configuration, exhibit dioxin-like properties. For the purpose of the emissions estimate, the 14 coplanar PCBs comprise 1 % of the total PCB emissions concentration. This basis is consistent with EPA guidance regarding PCB emissions from combustion facilities (EPA 2005). Assuming that 1 % concentration is evenly distributed across the 14 coplanar compounds, an individual coplanar PCB emission rate is calculated as 1/14 of 1 % of the total PCB emissions from each of the WTP process flues. Total PCBs are represented in the SSFM by CAS registry number 1336-36-3.

5.4 Application of Representative Inorganic and Radionuclide COPCs

As described in Section 5.2, the baseline SSFM tracks 38 of the 49 inorganic constituents, 4 out of 5 criteria pollutants, 30 of the 46 radionuclide constituents, and the 2 toxic air pollutants. The emission rates for compounds not estimated using the SSFM are based on the emission rate of a representative analyzed compound that is chemically or physically similar. This is achieved using the same approach described for the organic constituents in Section 5.3 (i.e., calculation of PF).

Selection of the representative constituents for the non-modeled constituents is described in the following subsections. Table 5 provides the final selection of the representative constituents.

5.4.1 Representative Inorganic COPCs in the SSFM

An initial analysis was performed to determine if similar constituents were being analyzed. If an inorganic constituent had a counterpart radioactive constituent being modeled, then the emission rates of

the nonradioactive constituents were calculated based on the results of the modeled counterpart. This approach was used for the following constituents:

Non-modeled Constituent	Modeled Counterpart
Co	^{60}Co
Sn	^{126}Sn
Sb	^{125}Sb
U	^{234}U

The rest of the constituents were categorized into nonvolatile, semivolatile, and volatile inorganics. The emission rate for zirconium (Zr) was used to estimate the emission rates for nonvolatile inorganics, such as tantalum (Ta), tungsten (W), and beryllium (Be). This approach was based on the following:

- The primary mechanism for nonvolatile inorganics to enter the melter offgas and vessel vent system stream is through entrainment, which is not specific to chemical species.
- The DFs for the HLW and LAW offgas treatment equipment are determined based on the average of the particle size distributions of aluminum (Al), iron (Fe), and Zr.

For semivolatile and volatile inorganics, such as molybdenum (Mo), thallium (Tl), and selenium (Se), the DFs that were reported in engineering calculations were compared to other analyzed semivolatile and volatile elements. The elements with the most comparable overall DFs are used as the representative elements.

5.4.2 Representative Radionuclide COPCs in the SSFM

A methodology similar to that applied to the inorganic COPCs has been applied to the radionuclide constituents. Counterpart constituents are as follows:

Non-modeled Constituent	Modeled Counterpart
^{134}Cs	^{137}Cs
^{137m}Ba	^{137}Cs
^{90}Y	^{90}Sr
^{59}Ni	^{63}Ni
^{113m}Cd	Cd
^{232}U	^{233}U
^{242}Pu	^{241}Pu
^{243}Am	^{241}Am
^{242}Cm	^{243}Cm
^{93}Zr	Zr

The emission rate for zirconium is used to estimate the emission rates for nonvolatile radionuclides, such as radium-226 (^{226}Ra), protactinium-231 (^{231}Pa), actinium-227 (^{227}Ac), radium-228 (^{228}Ra), and niobium-93m (^{93m}Nb).

For semivolatile and volatile radionuclides, the DFs that were reported in the engineering calculations were compared to other analyzed semivolatile and volatile elements. The elements with the most comparable overall DFs were used as the representative elements. Table 5 shows the summary of the representative constituents analysis.

6 Process Flowsheet Conditions

The baseline steady state flowsheet provides WTP material and energy balance information and data. This flowsheet is also the tool to provide the WTP emissions profile used to support environmental air permitting and risk assessment activities. Even though the same flowsheet is used, parameters used for generating emissions estimates differ from the ones used for baseline plant performance. The operating parameters within the unit operations remain the same (operating temperatures and pressures, for example). The major differences between the parameters are found in the feed vector, equipment performance (DFs), and plant throughput rates. The DFs and throughput rates utilized for the WTP material and energy balance provide the best realistic conditions for plant operations. The DFs and throughput rates used for this air emissions estimate conservatively estimate plant operation, which bounds plant air emissions for regulatory and risk assessment purposes.

For a complete detail of operating conditions for each unit operation within the WTP, refer to Sections 2 (Pretreatment), 3 (LAW), and 4 (HLW) of *Flowsheet Bases, Assumptions, and Requirements* (24590-WTP-RPT-PT-02-005). Section 8 of this report presents an overview of the operating conditions for the offgas systems and conditions used for this emissions profile, including throughput rates, feed vector, and equipment DFs.

7 Flowsheet Description and Emissions Analysis

This section provides an overview of the setup and structure of the flowsheet and how the emissions analysis is performed. For a detailed description of the depiction of the WTP flowsheet using the ACM (Aspen Custom Modeler) software, refer to the *Steady State Flowsheet (ACM) Model Design Document* (24590-WTP-MDD-PR-01-003).

7.1 Flowsheet Description

A description of the setup and structure of the flowsheet is provided below.

7.1.1 Inputs

The SSFM uses a large number of input (constrained) variables to specify the values within the equation matrix. The constrained variables fall into two categories: parameters and fixed variables. Parameters typically include constant properties such as DFs. Fixed variables include the operating conditions that define how the process operates. These specific fixed variables used for air emissions evaluations are described in Section 7.2. The air emissions parameters are discussed in Section 8.

7.1.2 Tracking of Constituents

The SSFM tracks components throughout the entire WTP. These components can be classified as solids, liquids, gases, organics, radioactive, nonradioactive, ions, and compounds. In cases where a liquid is split

into gas stream (e.g., the evaporator, vaporizer, and melter), the liquid and the vapor have different component sets. In order to track all of the mass, intermediate arrays are introduced. The components from the liquid stream that do not have a corresponding component in the gas stream are temporarily stored and then equated to a representative component in the gas stream.

Vapor streams have arrays for tracking solids and liquids. Entrained liquids and solids have separate arrays in the gas streams. This allows a distinction between entrained liquids and solids. In addition, this distinction is recognized when gaseous streams are condensed.

7.1.3 System Structure

The overall WTP process has been divided into 30 systems common to the flowsheet. Detailed information on how the flowsheet is constructed for these 30 systems can be found in Section 4 of the *Steady State Flowsheet (ACM) Model Design Document* (24590-WTP-MDD-PR-01-003).

7.1.4 Flowsheet Structure

The SSFM is composed of one single flowsheet encompassing the entire process. Portions of that flowsheet represent the modeling of specific unit operation and systems. Within the SSFM there are 47 independent custom modules. These modules serve as building blocks that are assembled to represent the process. The major plant systems are characterized by either a single module or a combination of modules. Within the individual modules reside the equations that serve to define the processes. The modules are composed of Visual Basic type code defining the mathematical relationship between the fixed variables, the parameters, and the other calculated values based on engineering principles. The modules are connected by streams through which they transfer information defining the properties pertaining to the streams. Collectively, the modules and streams make up the plant systems, which ultimately define the overall process.

7.1.5 Solution Methods

ACM uses iterative solution methods (like the Newton-Raphson method) to simultaneously solve all equations in the flowsheet. The convergence criterion is to make all equation residuals less than the given absolute tolerance.

The flowsheet has large recycle loops that are broken down by introducing tear blocks into them. Convergence of the flowsheet occurs when the tear blocks are aligned (input = output).

7.2 Emissions Analysis

The following subsections describe the methodologies used to determine air emission rates from the main flowsheet contributors. These methodologies correspond to the fixed variables input to the flowsheet.

7.2.1 Pretreatment Emissions Analysis

The pretreatment facility offgas systems are shown in Figures 2 and 3. The pretreatment vessel vent process system (PVP) provides the abatement for offgases from pretreatment process vessels and equipment. The pulse-jet ventilation system (PJV) controls emissions from the exhausts of pretreatment fluidic devices, such as PJMs and RFDs. Each system discharges to the pretreatment stack through separate headers.

Purge air supplied to pretreatment process vessels for hydrogen mitigation is collected and treated by a caustic scrubber, HEME, two stages of HEPA filtration, thermal oxidizer, and carbon bed adsorber prior to discharge through the pretreatment stack. Offgases from pretreatment process equipment, such as evaporator overheads, are also collected and treated by the PVP system.

PJMs are used throughout the pretreatment facility to resuspend solids in process vessels and to disperse mixtures before sampling process liquids. RFDs are used for liquid transfers and collecting samples of process liquids. Both PJMs and RFDs are fluidic devices that use compressed air to draw process liquid into a charge vessel, located within the process vessel, and then force the liquid back out to achieve the desired operation. The exhaust air from these operations, along with entrained aerosols, is collected and treated by medium efficiency mist eliminators, or demisters, and two stages of HEPA filtration prior to discharge through the pretreatment stack.

Sections 7.2.1.1 through 7.2.1.3 describe the emissions analysis methods for pretreatment facility emissions associated with:

- Vessel vent exhaust
- Evaporator overheads
- RFD/PJM exhaust

7.2.1.1 Vessel Vent Exhaust

The exhaust from the vessel vent system consists of the purge air supplied to pretreatment process vessels for controlling radiolytic hydrogen generation within the vessel vapor space. In addition to increasing in temperature and moisture content, the purge air also becomes contaminated as it passes through the vessel vapor space. Mixing, sparging, radiolytic hydrogen generation, process transfers, and evaporation contribute to the release of aerosols and particulates into the vessel vent offgas stream.

To determine air emission rates for inorganic and radionuclide constituents in the PTF vessel vents, a liquid entrainment factor has been calculated for all process vessels based on *PT Vessel Vent System Baseline Operating Conditions and Radioactive Aerosol Loading of Exhaust Air Streams* (RPT-W375PT-PR00021). These entrainment factors are provided in Section 8. From the entrainment factor, the quantity of an inorganic or radionuclide constituent in the vessel vent offgas stream can be determined by multiplying the quantity of the constituent entering the vessel in the liquid phase by the entrainment factor for that vessel.

For organic constituents, the quantity of organics in the offgas stream is determined through the application of Henry's Law, which estimates the equilibrium gas phase concentration of a compound from the known liquid phase concentration (RPT-24590-EN00001, *Vessel Vents and PJM/RFD Emissions*). The Henry's Law method was selected because it is considered a conservative approach as it assumes that the constituent reaches full equilibrium between the liquid and gas phases. Henry's Law constants used for the organic constituents are presented in Table 2. The Henry's Law method was used in the flowsheet to calculate the organic emission releases throughout the vessel vent systems (pretreatment and both vitrification plants) and evaporator systems. The constants were developed on the basis that operating conditions on the vessels are near standard temperature and pressure conditions; thus, the Henry's Law constants at standard conditions are used. Details on selection of the Henry's Law constants can be found in Section 5 of RPT-24590-EN00001.

All constituents released from the vessel vents are collected in a common header and directed to the offgas treatment system. In this system, the removal efficiency of each constituent is dependent on its phase, solubility, auto ignition temperature, and molecular weight. The details for this system are discussed in Section 8.6.1.

The pretreatment vessel vent thermal oxidizer is designed for a minimum operating temperature of 1600 °F (24590-PTF-M0C-PVP-00001) and could generate some PICs. For purposes of the emissions analysis, PICs are defined as compounds identified in Table A-1 of the *Human Health Risk Assessment Protocol for Hazardous Waste Combustion Facilities* (EPA 2005), but are not components of the waste feed. It has been conservatively established for emissions estimation purposes that PICs are present at the pretreatment stack at their estimated detection limits. This basis was verified by comparing the detection limits to what has been observed in the results of tests performed by R&T on the offgas treatment systems. Limits used for this evaluation are generally higher than what has been observed on the tests. The rationale and discussion for this basis are provided in Section 8.4.

7.2.1.2 Evaporator Overheads

The pretreatment facility contains three evaporators to reduce the volume of certain streams prior to further processing steps. These evaporators are associated with the following process streams:

- Waste feed
- Cesium eluate
- Treated LAW

Each evaporator is analyzed under continuous operation at a pressure of 1.0 to 1.5 psia. The reduced pressure lowers the boiling point of the process stream. The waste feed and treated LAW evaporator overheads are routed to primary condensers, where most of the vapor is condensed at the saturation pressure. Contaminant removal by the evaporators and condensers is estimated using DFs which have been derived by collecting existing evaporator data from working units at the Hanford Site and R&T test results. These are further discussed in Section 8.6.1.

The vapor stream from the cesium evaporator enters the rectifier columns prior to the primary condensers. Section 2.6-1 of *Flowsheet Bases, Assumptions, and Requirements* (24590-WTP-RPT-PT-02-005) shows how the DFs for the cesium evaporator/rectifier are derived. Noncondensable vapors from all four evaporators join the vessel vent header prior to the offgas treatment system as shown in Figures 2 and 3. For the purpose of the analysis, the evaporator/condenser overheads are considered to be saturated air containing entrained evaporator liquid.

Specific equipment DFs used for emissions analysis are presented in Section 8.6 of this report.

7.2.1.3 RFD and PJM Exhaust

Both RFDs and PJMs work by using compressed air to raise and lower process fluid in a charge vessel located inside the process vessel. One end of the charge vessel is connected to a jet pump pair that provides the suction for drawing liquid up into the charge vessel and the drive for forcing the liquid back out of the charge vessel. At the end of the drive phase, residual compressed air in the charge vessel passes back up through the jet pump pair and into the PJV system header. Significant quantities of

compressed air are exhausted through the jet pump pair during the suction and vent phases. Cycle times can vary from less than 1 minute to more than 10 minutes. Liquid aerosols and radiolytic particulates will become entrained in the exhausts from the jet pump pair via the charge vessel.

For organic, inorganic, and radionuclide constituents, an aerosol entrainment factor is used to calculate the amount of process liquid in the charge vessel that is transferred to the exhaust stream. The aerosol entrainment factor is derived from the BNFL release fraction (RF) of 1×10^{-10} for exhausts from RFDs (BNFL, Inc 1996). The RF is defined as the ratio of activity or mass per unit volume in the exhaust to the activity or mass per unit volume in the process liquid. The total aerosol release (mass flow rate) is equal to the RF multiplied by the ratio of the volumetric flow rate of the RFD/PJM exhaust to the volumetric flowrate of the process liquid multiplied by the mass flow rate of the process liquid.

$$RF = \frac{activity\ or\ mass\ /\ volume\ in\ air}{activity\ or\ mass\ /\ volume\ in\ liquid}$$

$$RF = \frac{lbs(i)\ /\ ft^3\ vent}{lbs(i)\ /\ ft^3\ liquid}$$

where (i) is constituent of interest

For RF in terms of flowrate:

$$RF = \frac{lbs(i)\ /\ \min in\ vent}{lbs(i)\ /\ \min in\ liquid} \times \frac{ft^3\ /\ \min liquid}{ft^3\ /\ \min vent}$$

where:

RF is 1×10^{-10} for RFD exhaust
lbs(i)/min in liquid is known
ft^3/min liquid is known
ft^3/min vent is known (fixed value of RFD/PJM exhaust)

$\therefore$ lbs(i)/min in vent is RF × lbs(i)/min in liquid × $\frac{ft^3\ /\ \min vent}{ft^3\ /\ \min liquid}$

7.2.2 LAW and HLW Vitrification Emissions Analysis

The LAW and HLW vitrification facilities have devoted offgas systems for controlling emissions. Additional detail regarding the vitrification facilities is provided below.

7.2.2.1 LAW and HLW Vessel Ventilation Systems

The exhaust from the vessel vent system consists mainly of air inleakage and instrument air addition to process vessels. This air becomes contaminated as it passes through the vessel vapor space. Mixing,

sparging, radiolytic hydrogen generation (in HLW only), process transfers, and evaporation contribute to the release of aerosols and particulates into the vessel vent offgas stream.

As in the PTF, a liquid entrainment factor has been calculated for inorganic and radionuclide constituents for all process vessels. The LAW entrainment factors are based on calculation *System 234 LAW Vessel Ventilation Calculation* (CALC-W375LV-PR00022). For HLW, the entrainment factors are based on Section 4.3.3.4 of the *Flowsheet Bases, Assumptions, and Requirements* (24590-WTP-RPT-PT-02-005). From the entrainment factor for inorganic and radionuclide constituents, the quantity of a constituent in the vessel vent offgas stream can be determined by multiplying the quantity of the constituent entering the vessel in the liquid phase by the entrainment factor for that vessel. As in the PTF, the quantity of organics in the offgas stream is determined through the application of Henry's Law, which estimates the equilibrium gas phase concentration of a compound from the known liquid phase concentration.

7.2.2.2 LAW and HLW Melters

For the melters, the feed enters from the top and forms a cold cap above the melt pool. Volatile and semivolatile compounds are evaporated or decomposed, then drawn off through the melter offgas system. Nonvolatile compounds react to form oxides or other compounds dissolved in the glass matrix. Behavior in the melter is represented in the flowsheet by chemical reactions and application of DFs. These DFs and reactions are based on R&T test results, engineering calculations, and literature research. A complete list of reactions occurring in the melters can be found in Section 3.2.3 for LAW and Section 4.2.3 for HLW in the *Flowsheet Bases, Assumptions, and Requirements* (24590-WTP-RPT-PT-02-005). Specific DFs used for emissions analysis for the melters are presented in Section 8.6 of this report.

7.2.2.3 Vitrification Scrubbers

The submerged bed scrubber (SBS), in both HLW and LAW, and the LAW caustic scrubber behavior in the flowsheet are also represented by operating conditions, occurring chemical reactions, and DFs applied. The SBS is used to quench the hot offgas exiting the melters and to remove large particulates. The LAW caustic scrubber is used to remove SO_x and to provide final offgas quenching. Some incidental acid gas removal and soluble salts removal also occurs in this unit. For a listing of chemical reactions and operating conditions for each scrubber, refer to Section 3.3.3 for LAW and Section 4.3.3 for HLW of *Flowsheet Bases, Assumptions, and Requirements* (24590-WTP-RPT-PT-02-005). The DFs and chemical reactions have been derived from R&T test results, engineering calculations, and literature research. Specific DFs used for emissions analysis for all three scrubbers are presented in Section 8.6 of this report.

7.2.2.4 Remaining Vitrification Offgas Unit Operations

The remainder of the unit operations' behavior in the offgas systems (WESP, HEME – HLW only, activated carbon beds, silver mordenite – HLW only, selective catalytic oxidizer, and selective catalytic reducer) is represented by applying pertinent DFs. Some chemical reactions also occur in these units. For example, in the selective catalytic oxidizer, SO_2 is oxidized to SO_3, and CO is oxidized to CO_2. The DFs and chemical reactions have been derived from R&T test results, vendor information, and literature search. For a listing of chemical reactions and operating conditions for all these units, refer to Section 3.3.3 for LAW and Section 4.3.3 for HLW of *Flowsheet Bases, Assumptions, and Requirements* (24590-WTP-RPT-PT-02-005). Specific DFs used for emissions analysis for all these units are discussed in Section 8.6 of this report.

7.2.2.5 HLW PJM/RFD Exhaust

Entrainment factors from these units are calculated in the same manner as the PTF PJM/RFD entrainment factors as discussed in Section 7.2.1.3. Refer to that section for further details.

8 Emissions Analysis Bases

As stated in Section 6, the differences between the baseline design and the air emissions case analyzed in the SSFM are the throughput rates, DFs, and feed vector. This section outlines the bases for the air emissions case.

8.1 Throughput and Operating Conditions

Design throughput rate for the LAW melters is 15 metric tons of glass per day (MTG/d) each and 3 MTG/d for each HLW melter. This equates to a total design rate of 30 MTG/d ILAW and 6 MTG/d IHLW. Although the LAW facility has only two melters, provisions exist to add a third melter. For the purpose of this analysis, throughput rates of 50 MTG/d for the LAW facility and 6 MTG/d for the HLW facility are used. The higher LAW rate bounds the facility's emission rates if increased capacity is introduced in the future.

The PTF has the capability to process LAW waste at a throughput of 80 MTG/d in order to support LAW and the alternate LAW process technology. Per negotiations with the regulatory agencies, the WTP cannot be permitted for the excess capacity until the alternate technology is defined. Therefore, the throughput for the WTP permits is based on the vitrification plants throughput (50 MTG/d ILAW and 6 MTG/d IHLW). Because the LAW and HLW vitrification stacks emission rates dominate the WTP inorganic and radionuclide air emissions, and because it is assumed that all the PTF vessels operate and contribute to the PTF vessel vent system at the same time, the additional PTF capacity is not expected to significantly increase the PTF stack air emissions.

8.1.1 Feed Conditions

LAW feed envelopes fall within a range of 4 to 10 moles of sodium per liter. The lower sodium molarity feeds will be processed by the WTP at a higher rate. In order to bound the emissions estimate, the WTP feed is set at a 4 molar sodium concentration.

8.1.2 General Pretreatment Facility Conditions

During normal operations, any feed that enters the pretreatment plant with a sodium molarity of 5 molar or higher bypasses the feed evaporator. To conservatively maximize emissions from the pretreatment facility, the sodium molarity of feed streams was set at 4 molar sodium, as stated in Section 8.1.1.

Feed rate into the plant depends on the feed characteristics, which in turn determine glass composition. After the feed is evaporated in the waste feed evaporation process system (FEP) evaporator, it is sent to the ultrafiltration system so that HLW solids can be washed and concentrated. The HLW solids are concentrated until they reach a 20 wt% set point. While this is being achieved, the LAW feed is constantly being fed forward to the cesium ion exchange system. The cesium ion exchange system removes the cesium from the LAW feed with an efficiency of 99.997 % so that the LAW source term requirements are met. The LAW feed then continues to the treated LAW evaporator where it is

evaporated to a set point of 8 molar sodium so that the waste volume is reduced before going to the LAW facility. Immediately after the treated LAW evaporation process system (TLP) , the LAW feed splits between the LAW facility and the future LAW processing plant. For this emissions analysis all the LAW feed goes to LAW vitrification. The feed is then forwarded to the concentrate receipt vessels (CRVs) in the LAW facility.

After ultrafiltration, the HLW solids are sent to the HLW lag storage area before being transferred to the HLW vitrification facility. From this point on, the HLW feed is fed in a batch method to the HLW melter feed preparation vessels (MFPVs).

Detailed operating conditions for all other systems in the pretreatment facility are as stated in Section 2 of 24590-WTP-RPT-PT-02-005. Conditions are similar to those stated for processing Envelope A waste. No leaching occurs in the emissions analysis, as it was determined from scenarios evaluated that leaching does not provide a bounding air emissions case for WTP.

8.1.3 General LAW Facility Conditions

The LAW feed is transferred in batches from the TLP system storage vessel to the LAW CRVs. From the CRV, the feed is fed forward in batches to the MFPVs. Sampling in the CRVs determines the size of the batch to be sent to the MFPV and the glass recipe required to produce compliant glass. Once the glass former chemicals are introduced into the MFPVs, the contents are thoroughly mixed and fed forward to the melter feed vessels (MFVs). The MFV then provides a constant feed supply to the LAW melters. The LAW air emissions feed vector allows 20 % waste loading (monitored as Na_2O loading) into the glass. LAW waste oxide loading is defined as the weight of sodium oxide (Na_2O) to the total weight of waste and glass formers. This waste loading is in the upper range for the ILAW glass (nominal operating range will be between 14 % and 17 %). Higher waste loading indicates a larger volume of waste being fed into the melter, which in turn equates to higher contaminant release from the melters. The offgas generated from the melters is then treated through the primary and secondary offgas systems where contaminants are removed to ensure that the offgas emitted from the LAW stack is compliant with all air permits.

8.1.4 HLW Facility Conditions

The HLW feed is transferred in batches from the HLW lag storage vessel to the HLW MFPV. Sampling in the MFPV determines the recipe required to produce compliant glass. Once the glass former chemicals are introduced into the MFPVs, the contents are thoroughly mixed and resampled to verify correct glass formulation. From here, the waste is fed forward to the MFVs. The MFV then provides a constant feed supply to the HLW melters. The HLW air emissions feed vector allows 40 % waste loading into the glass. HLW waste loading is defined as the weight of waste oxides to the total oxides and glass formers. This waste loading is in the upper range for the IHLW glass (nominal operating range will be between 30 % and 35 %). Higher waste loading indicates a larger volume of waste being fed into the melter, which in turn equates to higher contaminant releases from the melters. The offgas generated from the melters is then treated through the primary and secondary offgas systems where contaminants are removed to ensure that the offgas emitted from the HLW stack is compliant with all air permits.

8.2 Feed Concentration for Organic Compounds

Organic characterization data applicable to the organic COPCs from candidate double-shell tank system feed streams is not completely available. To compensate for data gaps, an approach for establishing a

conservative, bounding basis for hazardous organic concentrations was used. The approach, which relies on previous analytical work relating to total organic carbon (TOC) in the double-shell tanks, process knowledge, and hazardous organic analyses, is summarized below.

Based on maximum TOC analyses from double-shell tanks scheduled for processing during the first 11 years of operation and the WTP's contractual limit for TOC, a value of 2.5 wt% TOC was used for this analysis. Non-regulated organics, such as complexants and low molecular weight acids (Campbell and others 1995), have been measured between 78 % and 99 % of TOC. These results are biased low, as the analysis methods do not adequately address most paraffins and many phosphates.

In the previous release of this report, 87.5 % was used to represent a minimum proportion of unregulated organic content, and the remainder was assumed to be regulated chemicals (12.5 %). Because selected hazardous organic constituents have been eliminated from the feed (CCN 097844), it is assumed for this evaluation that the percentage of accounted organic constituents (e.g., oxalate) increases to 90 % (from 87.5%) of the 2.5 wt% TOC in the feed, while the remaining 10 % of the 2.5 wt% TOC in the feed is assumed to be hazardous organic constituents. This equates to a drop of 2.5 % of the unaccounted hazardous organic constituents in the feed. LAW and HLW are assumed to contain equal concentrations of unaccounted hazardous organic constituents. The TOC concentration includes the hazardous organic COPCs and other nonregulated organic compounds that were used in Hanford processes. More specifically, the origins of organic compounds in Hanford tanks are associated with one of the following:

- Process additions (such as complexants and solvent extractants)
- Laboratory wastes
- Decontamination solutions
- Other minor additions

With the exception of process additions, few records exist about the amount of organic compounds added to the tanks. As part of the safety programs for the tanks, Hanford personnel have conducted a number of studies that focused on accounting for the predominant contributors to the historically measured TOC values. The studies have shown that the process additions, particularly the complexants, and their associated degradation products comprise the majority of the organic compounds in the tanks. Specifically, the predominant organic complexants used in the Hanford processes include ethylenediamine tetraacetate (EDTA), hydroxyethylenediamine triacetate (HEDTA), glycolate, and citrate. Lesser amounts of complexants, such as nitrilotriacetic acid (NTA), di-(2-ethylhexyl) phosphoric acid, and oxalic acid, were used. The degradation products from the complexants are low molecular weight materials whose parent acids include formic, acetic, glycolic, oxalic, succinic, and citric acids.

The 10 % of TOC that was not accounted for as complexants has been distributed across the organic COPCs using the analytical results performed on two representative tanks (Klinger and others 1999) and from the guidance of the *Regulatory Data Quality Objectives Optimization Report* (24590-WTP-RPT-MGT-04-001). To compensate for data uncertainty, a scaling factor was applied. This factor was determined by summing the concentrations of compounds that were detected with those compounds that were undetected (assumed to be present at their detection limit) and dividing 10 % of the TOC by this sum. This resulted in a scale factor of approximately 189. The increased values have been used as feed concentrations in the emissions estimate. A complete list of the resulting feed concentrations is included in Table 6. Generation of this feed vector is documented in *WTP Air Emissions Hazardous Organic Constituents Feed Concentrations* (24590-WTP-M4C-FRP-00006). This calculation is attached as Appendix D of this report.

8.2.1 Feed Concentration for Polychlorinated Biphenyls

The Hanford double-shell tanks are known to contain PCB remediation waste that will be included in the mixed waste feed processed by the WTP. The list of organic COPCs identified in Table 2 includes the PCBs scoped by this emissions estimate.

DOE and its contractors have been working with EPA and Ecology to resolve regulatory issues associated with managing PCB remediation waste at the WTP. On 31 August 2000, DOE, EPA, and Ecology signed the *Framework Agreement for Management of Polychlorinated Biphenyls (PCBs) in Hanford Tank Waste* (DOE and others 2000). This agreement establishes that the waste feed to the WTP be limited to 50 parts per million PCBs. The agreement does not specify whether this concentration applies to the liquid fraction, the solid fraction, or both.

Solubility information for PCB compounds indicates that they are essentially insoluble in water. Specifically, data is available indicating solubilities that range from 1.3E-06 to 5.7E-8 g/100 mL of water (Howard and others 1997). In applying the PCB feed criteria specified in the *Framework Agreement for Management of Polychlorinated Biphenyls (PCBs) in Hanford Tank Waste* (DOE and others 2000), it has been assumed that the 50 parts per million by weight would be most appropriately applied to Envelope D HLW feed streams, as Envelope D is principally composed of undissolved salt and oxide solids. The emissions estimate has thus assumed an HLW feed concentration for total PCBs of 50 mg/kg. The LAW feed concentration for total PCBs was established using the same methodology described in Section 8.2 for other organic COPCs. This concentration (0.4 mg/L) has been used for LAW feeds and is bounding considering the near insolubility of PCBs in aqueous salt solution.

8.3 Feed Concentrations for Inorganic and Radionuclide Compounds

Inorganic and radionuclide constituents feed concentrations for air emissions analysis are based on two main sources, the SOW maximum concentrations and the Tank Waste Information Network System (TWINS), which provides the BBI for all Hanford tanks. Tanks evaluated for BBI information are based on the latest WTP feed delivery sequence as specified in calculation *WTP Air Emissions Inorganic and Radionuclide Constituents Feed Vector* (24590-WTP-M4C-FRP-00001). The calculation also provides the basis for the type of waste being processed for each tank (i.e., supernate, slat cake, or solids). This information determined which data from the BBI was going to be used for the feed vector analysis. The tanks and types of waste used for evaluation are as follows.

<u>LAW</u>

- AN-102 supernate (Envelope C)
- AN-103 dissolved solids (salt cake) and supernate (Envelope A)
- AN-104 dissolved solids (salt cake) (Envelope A)
- AN-105 dissolved solids (salt cake) and supernate (Envelope A)
- AN-107 supernate (Envelope C)
- AP-101 supernate (Envelope A)
- AP-102 supernate (Envelope A)
- AP-103 supernate (Envelope A)
- AP-104 supernate (Envelope A)

- AP-105 supernate (Envelope A)
- AW-101 dissolved solids (salt cake) and supernate (Envelope A)
- AZ-101 supernate (Envelope B)
- AZ-102 supernate (Envelope B)
- SY-101 supernate (Envelope A)

HLW

- AW-104 solids (Envelope D)
- AY-101 solids (Envelope D)
- AY-102/C-106 solids (Envelope D)
- AZ-101 solids (Envelope D)
- AZ-102 solids (Envelope D)
- C-104 solids (Envelope D)
- C-107 solids (Envelope D)

The average concentration of each inorganic constituent, except Hg, from all the evaluated tanks was selected and used as the feed concentration for the emissions analysis. The Hg amount used was the SOW maximum. For radionuclide constituents, the SOW maximum concentrations were used. Whenever there was no SOW maximum specified for a radionuclide constituent, the maximum BBI value was used.

The previous air emissions feed vector for inorganic and radionuclide constituents was based on Revision 0A of the *WTP Air Emissions Inorganic and Radionuclide Constituents Feed Vector* (24590-WTP-M4C-FRP-00001). Since this revision, the calculation was updated to include changes to the SOW maximum concentrations and updated BBI data. Maximum concentrations were selected for all constituents. This updated feed vector was tested in the air emissions flowsheet. Based on the results of the test run it was determined that the nature of the feed vector (all constituents at their maximum concentrations) was not providing bounding conditions for air emissions purposes. Extensive R&T data reconciliation has been incorporated into the WTP flowsheet since 2004. Part of this data reconciliation included glass formulation updates, glass quality constraints, and process constraints. Having a feed vector with all constituents at maximum concentrations activates a significant amount of these constraints, which in turn causes the feed to be diluted within the process and dramatically reduces the feed rate into the front end of the process. These constraints are mainly activated by the inorganic constituents. After several test runs, it was determined that average feed concentrations for inorganic constituents and maximum feed concentrations radionuclide constituents conservatively bound scenarios for WTP air emissions purposes.

This selection process and the determination of the final emissions analysis feed vector can be found in *WTP Air Emissions Inorganic and Radionuclide Constituents Feed Vector* (24590-WTP-M4C-FRP-00001), which is attached as Appendix E of this report. A summary of the inorganic and radionuclide feed vector selected is included in Table 7 for LAW feed and Table 8 for HLW feed.

8.4 Concentration of Products of Incomplete Combustion

The list of COPCs discussed in Section 3 includes 135 PICs that are not known or suspected to be components of the WTP feed streams. These constituents have been included based upon their potential to be formed within thermal components of the WTP process; specifically, the vitrification melters and thermal oxidizing components of the pretreatment and vitrification offgas treatment systems. The subject PICs are composed of volatile and semivolatile compounds. The semivolatile compounds include a subset of PAHs, dioxins, and furans that are of particular interest to risk assessment.

EPA's *Human Health Risk Assessment Protocol for Hazardous Waste Combustion Facilities* (EPA 2005) provides guidance for establishing emissions estimates for facilities that are not yet operational. The guidance states the following:

> Good engineering practice dictates a check of, and comparison with, data from similar existing units. Stack test reports for facilities of similar technology, design, operation, capacity, auxiliary fuels, waste feed types, and air pollution control standards (APCSs) should be used to estimate COPC emission rates for new facilities that have not been constructed.
>
> If the preferred option of using surrogate data from similar facilities is not available, some state environmental agencies enforce emission rate limits based on state laws. Since these limits cannot be exceeded, they can be used to develop emission rate estimates for the risk assessment. The facility will demonstrate that its emissions are less than those considered in the permit and risk assessment during the trial or risk burn.

The EPA guidance has been utilized in selecting the method for estimating PIC emissions at the WTP. There have been two mixed waste treatment facilities in Washington State and Idaho that have pursued regulatory permits that include human health and ecological risk assessment similar to that required for the WTP. Although neither facility has been operated to date, both have been used as precedents for estimating PIC emissions resulting from the treatment process. In the cases of both precedent facilities, emission rates for PICs were estimated by multiplying the PIC detection limit (or in some cases, one-half the detection limit) by the airflow rate at the stack sampling location. A similar methodology has been used to estimate PIC emissions at the WTP; here, PIC emission rates are based upon the assumption that each PIC will be present in the pretreatment, HLW, and LAW process flues at its corresponding analytical detection limit.

In order to establish a basis for achievable stack detection limits, available R&T data was reviewed. Tests were conducted at the VSL of the Catholic University of America. These tests were performed on a small-scale vitrification system with WTP simulants that were spiked with selected hazardous organic compounds. The tests were conducted to assess destruction efficiencies in the melter and collect data on hazardous constituents in the offgas stream, including PICs. A total of 24 tests were conducted to study the effects of various parameters on hazardous organics emissions. These parameters included feed type, residence time, cold-cap coverage, plenum temperature, and presence of sugar as a reductant.

The VSL melter exhaust was sampled and monitored for volatiles, semivolatiles, dioxins, and furans. EPA SW-846 (EPA 2004) Method 0030 was used to sample volatile constituents from the offgas stream. The volatile samples were analyzed using Method 8260-B. Semivolatile analytes were sampled using Method 0010 and analyzed using Method 8270-C. Dioxins and furans were sampled using 40 CFR 60 Method 23 and analyzed using Method 8290. Details of the small-scale melter testing and results are

documented in *Determination of the Fate of Hazardous Organics During Vitrification of WTP LAW and HLW Simulants* (VSL 1999).

In addition to these tests, more tests were performed using the DM1200 pilot melter for regulatory and design purposes. Some of these tests included spiking with hazardous organic constituents. During these tests, PIC analysis was performed. Data from these reports was also used to determine detection limits for PICs. These reports are *Final Report Integrated Off-Gas System Test on the DM1200 Melter with RPP-WTP LAW Sub-Envelope C1 Simulants* (24590-101-TSA-W000-0009-111-01); *Final Report Integrated Off-Gas System Test on the DM1200 Melter with RPP-WTP LAW Sub-Envelope A1 Simulants* (24590-101-TSA-W000-0009-111-02); and *Final Report Regulatory Off-Gas Emissions Testing on the DM1200 Melter System Using HLW and LAW Simulants* (24590-101-TSA-W000-0009-166-00001).

Assumed detection limit concentrations have been applied based upon four groupings of compounds: volatile organics, semivolatiles, PAHs, and dioxins/furans. The detection limits reported from the VSL work should be conservative from an emissions perspective because the test work was not intended to drive detection limits to the lowest achievable levels. If longer sample durations and high-resolution analytical techniques are used, it is expected that lower detection limits could be achieved. A summary of the resulting detection limit concentrations for the volatile, semivolatile, and PAH groupings are shown in Table 9. Detection limits for each of the individual dioxin and furan compounds are also specified in Table 9. The concentrations of PICs shown in Table 9 have been multiplied by the volumetric flowrate for the applicable process flues to produce the individual PIC emission rates that are summarized in the document *Air Emissions Estimation of Products of Incomplete Combustion for the Hanford Tank Waste Treatment and Immobilization Plant* (24590-WTP-RPT-PO-05-007), which is included as Appendix F of this report.

8.5 Phase Allocation of Constituents of Potential Concern

For the purpose of the emissions analysis, the COPCs are partitioned to the vapor phase, particle phase, or particle-bound phase. Vapor-phase emissions are those emitted as volatile gases. Particle-phase emissions are particulate constituents (generally metals or other inorganics). Particle-bound emissions are volatile or semivolatile constituents that are bound to other particles. Throughout the flowsheet, particle-bound constituents are treated as both vapor and particulate constituents. Amount of the constituent in each phase is determined by the F_v value.

The phase type for each COPC is determined based on a partitioning factor, *Fv*, as provided in the methodology published in the draft *Human Health Risk Assessment Protocol for Hazardous Waste Combustion Facilities* (EPA 2005). The *Fv* is defined as follows:

$$Fv = 1 - \frac{cS_t}{p_l + cS_t}$$

where:

c is Junge constant [1.7×10^{-04} atmospheres-centimeter (atm-cm)]

p_l is liquid phase vapor pressure of compound (atm)

S_t is Whitby's average surface area of particles (3.5×10^{-06} cm^2/cm^3 air)

As shown in the above equation, as the vapor pressure increases, the *Fv* would approach 1. The following criteria (EPA 2005) are used to aid the determination of phase types:

- *Fv* is less than 0.05: the compound is particle phase
- *Fv* is equal to 1.0: the compound is vapor phase
- *Fv* is less than 1.0 but greater than or equal to 0.05: the compound is particle-bound phase and is treated as both vapor and particle. For example, an *Fv* value of 0.95 indicates that the constituent is 95% vapor and 5% particle. For an *Fv* value of 0.10, 10% of the constituent is vapor and 90% is particle.

For the WTP emissions analysis, the COPCs were evaluated for *Fv* at ambient conditions (25 °C, atmospheric pressure). Where available, the *Fv* values for individual COPCs were taken directly from the EPA guidance document titled *Human Health Risk Assessment Protocol for Hazardous Waste Combustion Facilities* (EPA 2005). *Fv* values for the remaining COPCs were estimated using the equation defining *Fv* (shown above) and liquid-phase vapor pressure data collected for the individual COPCs. Tables 2, 3 and 4 provide the phase types for organic, inorganic, and radionuclide COPCs, respectively. The methodology used to establish constituent phase is summarized in "Update 2: Vapor Phase Partitioning Coefficients" (CCN 129507). This document is included as Appendix G of this report and lists the *Fv* values for each COPC, including the vapor pressure data used for the estimates.

8.6 Equipment Decontamination Factors

For the emission analysis, DFs are used to predict the removal of COPCs by the offgas treatment systems. As shown in the following equation, the DF is a function of removal efficiency (η).

$$DF = \frac{1}{1-\eta}$$

The equipment DFs are established based on the following information sources:

- Available experimental or treatability study data
- Available engineering calculations on DFs
- Offgas phase allocation of COPCs (see Section 8.5)
- Vendor literature

The SSFM has DFs for unit operations based on nominal operating conditions. These DFs provide the best realistic performance to be expected from the unit operations. For emissions purposes, the design basis DFs were used. These DFs are sometimes lower (and more conservative) than the DFs expected to ensure that the profile obtained is bounding. The DFs per facility are described in the following sections.

8.6.1 Pretreatment Vessel Vents and Offgas Treatment Systems

The unabated quantities of organic, inorganic, and radionuclide constituents in the pretreatment facility offgas streams are estimated as described in Section 7.2.1. Entrainment factors are used in determining the inorganic and radionuclide quantities in the vessel vent and RFD/PJM exhausts. Henry's Law constants are used in determining the quantity of organic compounds from the vessel vents and

evaporators. Inorganic and radionuclide constituents' emissions from the evaporator overheads are determined from equipment DFs based on similar operating evaporators in the Hanford Site and on R&T test results.

Table 10 shows the vessel vent entrainment factors used to calculate the unabated emission rates for the inorganic and radionuclide constituents. Table 2 includes the Henry's Law constants used to determine unabated emissions for the organic constituents using vapor-liquid equilibrium. Table 11 shows the evaporator DFs used to determine emission rates from the unit for unabated inorganic and radionuclide constituents.

The emission control equipment DFs for the PVP and PJV systems are based primarily on vendor information. Table 12 presents the offgas treatment DFs and basis for the inorganic and radionuclide constituents. Table 13 provides the organic DFs for the pretreatment offgas treatment equipment. The methodology used to estimate the DFs for each organic constituent in the PVP system's thermal oxidizer and carbon bed adsorbers is presented in Appendix H. Removal efficiency for each constituent through the thermal oxidizer was based on the difference between the thermal oxidizer operating temperature and the constituents' auto-ignition temperature. The carbon bed removal efficiency for each constituent was based on the constituent's molecular weight.

8.6.2 LAW and HLW Melter Offgas Treatment Systems

The principal components of the melter offgas stream are air and water vapor. Secondary components of the melter offgas stream are acid gases and aerosols. Water in the melter feed is vaporized to steam. Acid gases are generated from the decomposition of salts and organic compounds in the feed. Aerosols are present due to cold-cap solids being entrained in the offgas stream. The HLW melter offgas is expected to contain less acid gases than LAW melter offgas. However, the HLW melter offgas will contain higher concentrations of radionuclides than the LAW melter offgas.

All the DFs used for this emissions analysis are based on actual R&T testing results, vendor information, and engineering calculations. The DFs used for emissions analysis in the vitrification plants are presented in Tables 14 and 15 (LAW and HLW respectively) for inorganic and radionuclide constituents. Table 16 shows the removal efficiencies expected for the organic constituents within the vitrification plants.

9 Summary of Emissions Analysis Results

This section provides the results from this evaluation.

9.1 WTP Baseline Air Emissions Results

The SSFM output identifies the emission rates for the 125 analyzed organic, inorganic, and radionuclide constituents, and criteria pollutants. This output is provided in Appendix A for the modeled constituents. As discussed in Section 5, representative compounds are used to estimate emission rates for compounds not analyzed within the SSFM. Tables 17 through 19 present the estimated emissions for each of the organic, inorganic, and radionuclide COPCs, respectively. The emission rates at the stack are referred to as abated emissions. In addition to stack emission rates, the SSFM produces output for unabated (or uncontrolled) emission points that correspond to the stack emission rates. The SSFM streams that are summarized in Tables 17 through 19 include the following.

Feed streams

- Feed from tank farms to HLW feed receipt (FRP14)
- Feed from tank farms to LAW feed receipt (FRP01)

Abated emissions

- The abated pretreatment vessel vent (stream PVP12)
- The abated pretreatment RFD/PJM vent (stream PJV11)
- The LAW process offgas and vessel vent (stream LVP18)
- The HLW process offgas and vessel vent (stream HOP31)
- The HLW RFD/PJM vent (stream PJV34)

Unabated emissions

- The unabated pretreatment vessel vent (stream before PVP01)
- The unabated pretreatment RFD/PJM (stream PJV04)
- LAW melter feed (stream LFP04 – for inorganic and radionuclide constituents only)
- The unabated LAW melter offgas (stream LMP06)
- The unabated LAW vessel vent (stream LVP01 – for inorganic and radionuclide constituents only)
- HLW melter feed (stream HFP03 – for inorganic and radionuclide constituents only)
- The unabated HLW melter offgas (stream HMP06)
- The unabated HLW vessel vent (stream HOP10 – for inorganic and radionuclide constituents only)
- The unabated HLW RFD/PJM (stream PJV32)

All of the values in Tables 17 and 18 are listed in grams per second. Table 19 values are presented in curies per year. The PIC emission rate estimates are presented in Table 20. Rates are shown in units of grams per second and are provided for the pretreatment, HLW, and LAW process flues. If any of the values calculated were less than 1×10^{-15} grams per second or curies per year, they were considered to be zero. This threshold was selected because emission rates less than 1×10^{-15} are difficult to reliably detect or measure.

As expected, the pretreatment processes contribute the highest abated organic emission rates, and vitrification processes contribute the highest abated inorganic and radionuclide emission rates. The vitrification processes are the main contributors of Hg, NO_2 and SO_2 emissions. They are also the main contributors of ^{129}I, ^{3}H, ^{14}C, and ^{137}Cs.

Emission estimates have been prepared, as detailed in Tables 17, 18, 19, and 20, in accordance with current comprehension of waste feed materials, normal process operations, and treatment efficiencies. The emissions estimate has retained conservatism with respect to composition, treatment, and analysis to ensure safe operation and protection of human health and the environment.

9.2 Additional Hazardous Feed Organic COPCs Air Emissions

Based on the *Industrial Hygiene Chemical Vapor Technical Basis* (CHG 2004), 11 additional hazardous organic constituents not scoped by the WTP air permits, have been measured in Hanford tank headspaces. It is unknown if these 11 constituents will be present in the WTP waste feed; therefore, the WTP and regulatory agencies have not opted to include them in the air permits and environmental risk evaluations to date. To provide an initial evaluation of the air emission rates for these constituents, their rates are presented in Table 21. The input bases for the 11 additional hazardous feed organic COPCs are documented in CCN 128557, which is included as Appendix I of this report.

9.3 Baseline Air Emissions Comparison to Baseline Envelopes A/D, B/D, and C Expected Air Emissions

Baseline air emission estimates were calculated for Envelopes A/D, B/D, and C so that they could be compared to the baseline WTP air emissions developed in this report. Results for radionuclide and inorganic constituents are shown in Tables 22 and 23, respectively. Only the results from the modeled constituents are presented in the tables, as the same trends would be seen in the non-modeled constituents. A complete result of the organic constituents is not presented as their evaluation was done differently. The organic constituents are fed into the flowsheet on an mg/l basis; therefore, their introduction in the process is based on feed rates into the PTF. Therefore, total feed rates were compared to determine which would have the highest organic constituents feed rates. It should be noted that feed rate depends on many process variables with the main ones being feed characteristics, glass composition corresponding to the particular feed, and the glass production rate desired. The results are as follows:

- Air emissions total feed rate: 11.3 gpm
- Envelope A total feed rate: 9.6 gpm
- Envelope B total feed rate: 3.6 gpm
- Envelope C total feed rate: 4 gpm

The production rates targeted for all these scenarios were 50 MTG/d ILAW and 6 MTG/d IHLW so that the air emissions baseline was met to the extent possible. Envelope A reached both targeted production rates, but Envelopes B and C fell short for the HLW production rates. This is due to the nature of the feeds and lack of solids available in those feeds to meet the HLW targeted production rates.
Based on these results, the organic air emissions are conservatively bound by the air emissions case as it has the highest feed rate of all the cases.

For radionuclide constituents, feed concentrations used are the maximum allowed and therefore are expected to conservatively bound the radionuclide air emissions from the WTP process. This is clearly shown in Table 22, where all highest emission rates are attributed to the air emissions case.

Inorganic constituents are also conservatively bounded by the air emissions case as can be seen by the results shown in Table 23. The results show that ammonia is not bounded by the emissions case. In reality, it is expected that it will be, as the results for Envelopes A/D, B/D, and C do not include the updated ammonia slip requirements, which will significantly lower these numbers. Ammonia and nitric acid in the PTF are shown to be bounded by Envelopes A and B. These runs (A/D, B/D, and C) do not include an update to the rectifiers in the cesium ion exchange process system (CXP), which can result in an overestimate of the amount of ammonia and nitric acid in the PTF. This update was included in the air emissions case and is expected to represent the bounding rates for these constituents.

10 References

10.1 Project Documents

24590-101-TSA-W000-0004-125-00004, Rev 00A, *Test Summary: WTP Flowsheet Evaluation of Mercury-Containing Hanford Waste Simulant.*

24590-101-TSA-W000-0009-111-01, Rev 00B, *Final Report Integrated Off-Gas System Test on the DM1200 Melter with RPP-WTP LAW Sub-Envelope C1 Simulants.*

24590-101-TSA-W000-0009-111-02, Rev 00B, *Final Report Integrated Off-Gas System Test on the DM1200 Melter with RPP-WTP LAW Sub-Envelope A1 Simulants.*

24590-101-TSA-W000-0009-166-00001, Rev 00A, *Final Report Regulatory Off-Gas Emissions Testing on the DM1200 Melter Using HLW and LAW Simulants.*

24590-HLW-MKC-HOP-00002, Rev B, *Sizing of the HLW Silver Mordenite Columns (HOP-ABS-00002 & -00003).*

24590-HLW-MKD-HOP-00019, Rev 3, *Mechanical Data Sheet, HLW Catalytic Oxidizer/Reducer.*

24590-HLW-MVD-HOP-00015, Rev 1, *Mechanical Data Sheet, Activated Carbon Adsorber.*

24590-LAW-MKC-LVP-00004, *LAW Melters Offgas Caustic Scrubbers (LVP-SCB-00001) Process Conditions and Requirements.*

24590-LAW-MKC-LVP-00005, Rev A, *Mercury Mitigation Equipment for the LAW Offgas System (LVP-SKID-00001).*

24590-LAW-MKD-LVP-00012, Rev 3, *Mechanical Data Sheet, LAW Catalytic Oxidizer/Reducer.*

24590-PTF-M0C-PVP-00001, Rev C, *Duty of Pretreatment Vessel Vent Thermal Oxidizer (PVP-OXID-00001).*

24590-WTP-M4C-FRP-00001, Rev D, *WTP Air Emissions Inorganic and Radionuclide Constituents Feed Vector.*

24590-WTP-M4C-FRP-00003, Rev D, *Integrated Emissions Baseline Report Non-Modeled Inorganic and Radionuclide Constituents Air Emission Rates Estimation.*

24590-WTP-M4C-FRP-00005, Rev C, *Estimation of Non-SSFM Represented Organic Emission Rates Required to Support the Integrated Emissions Baseline Report.*

24590-WTP-M4C-FRP-00006, Rev B, *WTP Air Emissions Hazardous Organic Constituents Feed Concentrations.*

24590-WTP-MDD-PR-01-003, Rev 7, *Steady-State Flowsheet (ACM) Model Design Document.*

24590-WTP-MRQ-PO-05-0044, Rev 0, *Evaluation of Air Emissions Feed Vector Scenarios.*

24590-WTP-MRR-PO-05-020, Rev 0, *Steady State Flowsheet (ACM) Baseline Envelopes A/D, B/D, and C Runs for Air Emissions Comparison.*

24590-WTP-MRR-PO-05-022, Rev 0, *Steady State Flowsheet (ACM), 2005 Air Emissions Profile.*

24590-WTP-QAM-QA-01-001, *Quality Assurance Manual.*

24590-WTP-RPT-ENS-03-006, Rev 0, *Environmental Risk Assessment Work Plan for the Hanford Tank Waste Treatment and Immobilization Plant.*

24590-WTP-RPT-ENV-01-004, Rev 1, *Best Available Radionuclide Control Technology Analysis for the WTP.*

24590-WTP-RPT-MGT-04-001, Rev 0, *Regulatory Data Quality Objectives Optimization Report.*

24590-WTP-RPT-PO-05-007, Rev 1, *Air Emissions Estimation of Products of Incomplete Combustion for the Hanford Tank Waste Treatment and Immobilization Plant.*

24590-WTP-RPT-PT-02-005, Rev 3, *Flowsheet Bases, Assumptions, and Requirements.*

CALC-W375LV-PR00022, Rev 2, *System 234 LAW Vessel Ventilation Calculation.*

CCN 097844, Meeting Minutes, Lee Bostic, 3 September 2004, "Discuss and Resolve the Outstanding Risk Assessment Issues in the Risk Assessment Work Plan (RAWP)".

CCN 128548, Memorandum, Edgardo Berríos to File, 3 April 2003, "Air Emissions LAW and HLW Vitrification Melters and Primary Offgas Inorganic and Radionuclide Constituents Decontamination Factors".

CCN 128557, Memorandum, Edgardo Berríos to File, 9 December 2005, "Air Emissions Basis for Additional Identified Hazardous Organics Constituents in the Hanford Tank Farms".

CCN 129507, Memorandum, Lee Bostic to Edgardo Berríos, 6 January 2006, "Update 2: Vapor Phase Partitioning Coefficients".

RPT-24590-EN00001, Rev 0, *Vessel Vents and PJM/RFD Emissions.*

RPT-W375PT-PR00021, Rev 0, *PT Vessel Vent System Baseline Operating Conditions and Radioactive Aerosol Loading of Exhaust Air Streams.*

10.2 Codes and Standards

40 CFR 50. *National Primary and Secondary Ambient Air Quality Standards*, Code of Federal Regulations, as amended.

NQA-1. *Quality Assurance Requirements for Nuclear Facility Applications*. American Society of Mechanical Engineers International, New York, New York, as amended.

10.3 Other Documents

Best Basis Inventory, Tank Waste Information Network System (TWINS) database, http//twins.pnl.gov:8001/twins.htm.

BNFL, Inc. 1996. *Release Fraction Databook*, Datasheet 1.4, Rev 1.2, Number 96.

Campbell JA and others. 1995. *Flammable Gas Safety Program. Organic Analysis and Analytical Methods Development: FY 1995 Progress Report*, PNL-10776. Pacific Northwest Laboratory, Richland, Washington.

CHG. 2004. *Industrial Hygiene Chemical Vapor Technical Basis*, RPP-22491. CH2M HILL Hanford Group, Inc., Richland, Washington.

DOE and others. 2000. *Framework Agreement for Management of Polychlorinated Biphenyls (PCBs) in Hanford Tank Waste*, signed by H. Boston (US Department of Energy, Office of River Protection), T. Fitzsimmons (Washington State Department of Ecology), C. Findley (US Environmental Protection Agency), K. Klein (US Department of Energy, Richland Operations Office), 31 August 2000.

EPA. 1999b. *Screening Level Ecological Risk Assessment Protocol for Hazardous Waste Combustion Facilities*, EPA 530-D-99-001A, Peer Review Draft. US Environmental Protection Agency, Office of Solid Waste and Emergency Response, Washington, DC.

EPA. 2004. *Test Methods for Evaluating Solid Waste, Physical/Chemical Methods*, SW-846. US Environmental Protection Agency, Office of Solid Waste and Emergency Response, Washington, DC.

EPA. 2005. *Human Health Risk Assessment Protocol for Hazardous Waste Combustion Facilities*, EPA530-R-05-006, Final Report. US Environmental Protection Agency, Office of Solid Waste and Emergency Response, Washington, DC.

Howard PH and others. 1997. *Handbook of Physical Properties of Organic Chemicals.* Lewis Publishers, Inc., Boca Raton, Florida.

Klinger GS, Urie MW, Campbell JA, Clauss SA, Clauss TW, and others. 1999. *Organic Analysis of AW-101 and AN-107 Tank Waste*, BNFL-RPT-001, Revision 0. Prepared by Battelle Pacific Northwest Laboratories for BNFL, Richland, Washington.

Kupfer MJ. 1999. *Standard Inventories of Chemicals and Radionuclides in Hanford Site Tank Wastes*, Appendix I, HNF-SD-WM-TI-740, Revision 0. Fluor Daniel Northwest, Inc., Richland, Washington.

VSL. 1999. *Determination of the Fate of Hazardous Organics During Vitrification of WTP LAW and HLW Simulants,* TRPT-W375-99-00002, Revision 0. Vitreous State Laboratory, Washington, DC.

Wiemers KD, and others. 1998. *Regulatory Data Quality Objectives Supporting Tank Waste Remediation System Privatization Project*, PNNL-12040, Rev 0. Pacific Northwest National Laboratory, Richland, Washington.

Table 1 List of Process Flow Diagrams

Facility	System	Process Flow Diagram Name	Drawing #	Rev #
Pretreatment	FRP	Waste Feed Receipt	24590-PTF-M5-V17T-00003	1
	FEP	Waste Feed Evaporation (Sheet 1 of 2)	24590-PTF-M5-V17T-00004001	1
	FEP	Waste Feed Evaporation (Sheet 2 of 2)	24590-PTF-M5-V17T-00004002	1
	TLP	Treated LAW Evaporation	24590-PTF-M5-V17T-00005	1
	TCP	Treated LAW Concentrate Storage	24590-PTF-M5-V17T-00006	1
	HLP	HLW Feed Receipt	24590-PTF-M5-V17T-00007	1
	HLP	HLW Lag Storage and Feed Blending	24590-PTF-M5-V17T-00008	2
	UFP	Ultrafiltration Feed Preparation	24590-PTF-M5-V17T-00009	1
	UFP	Ultrafiltration	24590-PTF-M5-V17T-00010	2
	UFP	Ultrafiltration Permeate Collection	24590-PTF-M5-V17T-00011	1
	CXP	Cesium Ion Exchange Process Vessels	24590-PTF-M5-V17T-00012	1
	CXP	Cesium Ion Exchange Process Columns	24590-PTF-M5-V17T-00013	1
	CNP	Cesium Nitric Acid Recovery Process	24590-PTF-M5-V17T-00014	1
	CRP	Cesium Resin Addition Process	24590-PTF-M5-V17T-00018	1
	RDP	Spent Resin Collection And Dewatering Process	24590-PTF-M5-V17T-00020	1
	PVP/PVV/PJV	Pretreatment Vessel Vents Process (PVP/PVV)	24590-PTF-M5-V17T-00021001	1
	PVP/PVV/PJV	Pretreatment RFD/PJM Exhaust (PJV)	24590-PTF-M5-V17T-00021002	1
	PVP/PVV/PJV	Pretreatment Vessel Passive Purge Air Inlets (PVP)	24590-PTF-M5-V17T-00021003	1
	PVP/PVV/PJV	Pretreatment Vessels Vent Exhaust Header (PVP)	24590-PTF-M5-V17T-00021004	1
	PWD	Pretreatment Effluent, Plant Wash and Disposal	24590-PTF-M5-V17T-00022001	2
	PWD	Pretreatment Plant Wash and Disposal	24590-PTF-M5-V17T-00022002	2
	PWD/RLD	Pretreatment Radioactive Liquid Disposal (RLD)	24590-PTF-M5-V17T-00022003	1
	PWD/RLD	Pretreatment Radioactive Liquid Disposal/Recycle (RLD)	24590-PTF-M5-V17T-00022004	1
	NAR	Pretreatment Process Reagents	24590-PTF-M5-V17T-00023001	1
	SHR/SNR	Pretreatment Process Reagents	24590-PTF-M5-V17T-00023002	1
	DIW	Pretreatment Process Reagents	24590-PTF-M5-V17T-00023003	1
	AFR/STR/SPR	Pretreatment Process Reagents	24590-PTF-M5-V17T-00023004	1
	CXP	Cesium Ion Exchange Process Collection Vessels	24590-PTF-M5-V17T-00025	0
LAW Vitrification	LCP/GFR/LFP	LAW Concentrate Receipt & Melter 1 Feed	24590-LAW-M5-V17T-00001	5
	LCP/GFR/LFP	LAW Concentrate Receipt & Melter 2 Feed	24590-LAW-M5-V17T-00002	5
	LMP/LOP	LAW Vitrification Melter 1	24590-LAW-M5-V17T-00004	4
	LMP/LOP	LAW Vitrification Melter 2	24590-LAW-M5-V17T-00005	4
	LOP	Melter 1 Primary Offgas Treatment	24590-LAW-M5-V17T-00007	4
	LOP	Melter 2 Primary Offgas Treatment	24590-LAW-M5-V17T-00008	4
	AMR/LVP	LAW Vitrification Ammonia & Secondary Offgas	24590-LAW-M5-V17T-00010	4
	LVP	LAW Vit Secondary Offgas Treatment	24590-LAW-M5-V17T-00011	4
	CDG	LAW Vitrification Container Decontamination	24590-LAW-M5-V17T-00013	3
	RLD	LAW Liquid Effluent	24590-LAW-M5-V17T-00014	4
	SHR	LAW Cold Chemical Supply	24590-LAW-M5-V17T-00016	4
HLW Vitrification	HCP/GFR/HFP	HLW Receipt & Feed Preparation	24590-HLW-M5-V17T-00001	5
	HMP/HOP	HLW Vitrification Melter 1	24590-HLW-M5-V17T-00002	5
	HOP	HLW Vit Melter 1 Primary Offgas Treatment	24590-HLW-M5-V17T-00003	5
	HOP	HLW Vitrification Melter 1 Secondary Offgas Treatment	24590-HLW-M5-V17T-00004	5
	PJV	HLW Vitrification Pulse Ventilation Treatment	24590-HLW-M5-V17T-00005	4
	HDH	HLW Vitrification HLW Canister Decon	24590-HLW-M5-V17T-00006	5
	RLD	HLW Vitrification Liquid Waste Effluent (Sheet 1)	24590-HLW-M5-V17T-00007001	5
	RLD	HLW Vitrification Liquid Waste Effluent (Sheet 2)	24590-HLW-M5-V17T-00007002	5
	NAR/SHR/AMR/AFR/DIW	HLW Vitrification Reagents	24590-HLW-M5-V17T-00008	5
	NLD	HLW C2 Drains Collection	24590-HLW-M5-V17T-00009	5
	HMP/HOP	HLW Vitrification Melter 2	24590-HLW-M5-V17T-20002	1
	HOP	HLW Vit Melter 2 Primary Offgas Treatment	24590-HLW-M5-V17T-20003	1
	HOP	HLW Vitrification Melter 2 Secondary Offgas Treatment	24590-HLW-M5-V17T-20004	1

Table 2 List of Organic COPCs and PICs

#	CAS Registry Number	Compound	Source	SSFM Indicator?	Henry's Law Constant (bar*m^3/kgmol)	Henry's Law-Based Grouping	Offgas Phase Type
1	100-00-5	p-Nitrochlorobenzene	Feed	-	4.83E-03	10	Vapor
2	100-21-0	p-Phthalic acid	Feed	Yes	3.83E-10	1	Vapor
3	100-41-4	Ethyl benzene	Feed	-	7.78E+00	20	Vapor
4	100-42-5	Styrene	Feed	-	2.71E+00	19	Vapor
5	10061-01-5	cis-1,3-Dichloropropene	Feed	Yes	2.67E+00	19	Vapor
6	10061-02-6	trans-1,3-Dichloropropene	Feed	-	8.60E-01	17	Vapor
7	101-55-3	4-Bromophenylphenyl ether	Feed	-	1.15E-01	14	Vapor
8	101-84-8	Diphenyl ether	Feed	Yes	2.75E-01	16	Vapor
9	106-35-4	3-Heptanone	Feed	-	8.96E-02	14	Vapor
10	106-42-3	p-Xylene (Dimethyl benzene)	Feed	-	6.81E+00	19	Vapor
11	106-46-7	1,4-Dichlorobenzene	Feed	-	2.38E+00	18	Vapor
12	106-88-7	1,2-Epoxybutane	Feed	-	1.78E-01	15	Vapor
13	106-93-4	Ethylene dibromide (1,2-Dibromoethane)	Feed	Yes	6.58E-01	16	Vapor
14	106-97-8	Butane	Feed	Yes	9.37E+02	26	Vapor
15	106-99-0	1,3-Butadiene	Feed	Yes	7.26E+01	23	Vapor
16	107-02-8	Acrolein	Feed	-	1.20E-01	14	Vapor
17	107-05-1	3-Chloropropene (Allyl chloride)	Feed	-	1.09E+01	20	Vapor
18	107-06-2	1,2-Dichloroethane (Ethylene chloride)	Feed	-	1.16E+00	17	Vapor
19	107-12-0	Propionitrile	Feed	-	3.65E-02	13	Vapor
20	107-13-1	Acrylonitrile	Feed	-	1.36E-01	14	Vapor
21	107-18-6	2-Propene-1-ol	Feed	-	4.92E-03	10	Vapor
22	107-31-3	Formic acid, methyl ester	Feed	-	2.20E-01	15	Vapor
23	107-66-4	Dibutylphosphate	Feed	-	4.20E-06	5	Particle-bound
24	107-87-9	2-Pentanone	Feed	-	8.25E-02	14	Vapor
25	108-03-2	1-Nitropropane	Feed	-	8.59E-02	14	Vapor
26	108-05-4	Vinyl acetate	Feed	-	5.04E-01	16	Vapor
27	108-10-1	Hexone (4-Methyl-2-pentanone or MIBK)	Feed	-	1.36E-01	14	Vapor
28	108-20-3	Bis(isopropyl)ether	Feed	-	2.25E+00	18	Vapor
29	108-38-3	m-Xylene (Dimethyl benzene)	Feed	-	7.09E+00	19	Vapor
30	108-39-4	m-Cresol	Feed	-	8.45E-04	9	Vapor
31	108-87-2	Methylcyclohexane	Feed	Yes	4.24E+02	25	Vapor
32	108-88-3	Toluene	Feed	Yes	6.55E+00	19	Vapor
33	108-90-7	Chlorobenzene	Feed	-	3.07E+00	19	Vapor
34	108-93-0	Cyclohexanol	Feed	-	4.34E-03	10	Vapor
35	108-94-1	Cyclohexanone	Feed	-	8.88E-03	11	Vapor
36	108-95-2	Phenol	Feed	Yes	3.29E-04	8	Vapor
37	109-66-0	n-Pentane	Feed	-	1.23E+03	26	Vapor
38	109-99-9	Tetrahydrofuran	Feed	-	6.96E-02	13	Vapor

Table 2 List of Organic COPCs and PICs

#	CAS Registry Number	Compound	Source	SSFM Indicator?	Henry's Law Constant (bar*m^3/kgmol)	Henry's Law-Based Grouping	Offgas Phase Type
39	110-12-3	5-Methyl-2-hexanone	Feed	-	1.58E-01	15	Vapor
40	110-43-0	2-Heptanone	Feed	-	1.67E-01	15	Vapor
41	110-54-3	n-Hexane	Feed	Yes	1.78E+03	27	Vapor
42	110-62-3	n-Valeraldehyde	Feed	-	1.45E-01	15	Vapor
43	110-82-7	Cyclohexane	Feed	Yes	1.48E+02	24	Vapor
44	110-83-8	Cyclohexene	Feed	-	4.49E+01	22	Vapor
45	110-86-1	Pyridine	Feed	-	1.09E-02	11	Vapor
46	111-65-9	n-Octane	Feed	-	3.17E+03	28	Vapor
47	111-76-2	Ethylene glycol monobutyl ether	Feed	-	1.58E-03	9	Vapor
48	111-84-2	n-Nonane	Feed	Yes	3.36E+03	28	Vapor
49	117-81-7	Bis(2-ethylhexyl)phthalate (DEHP)	Feed	-	2.66E-04	30	Particle-bound
50	117-84-0	n-Dioctyl phthalate	Feed	-	2.54E-03	32	Particle-bound
51	120-12-7	Anthracene	Feed	Yes	5.49E-02	13	Particle-bound
52	120-82-1	1,2,4-Trichlorobenzene	Feed	Yes	1.40E+00	17	Vapor
53	120-83-2	2,4-Dichlorophenol	Feed	-	5.44E-03	10	Vapor
54	121-44-8	Triethylamine	Feed	-	1.47E-01	15	Vapor
55	121-69-7	Dimethylaniline	Feed	-	5.61E-02	13	Vapor
56	122-39-4	N,N-Diphenylamine	Feed	Yes	3.35E-03	10	Vapor
57	123-19-3	4-Heptanone	Feed	-	5.42E-02	13	Vapor
58	123-38-6	n-Propionaldehyde	Feed	-	7.24E-02	14	Vapor
59	123-51-3	3-Methyl-1-butanol	Feed	-	1.39E-02	12	Vapor
60	123-86-4	Acetic acid n-butyl ester	Feed	-	2.77E-01	16	Vapor
61	123-91-1	1,4-Dioxane	Feed	-	4.74E-03	10	Vapor
62	126-73-8	Tributyl phosphate	Feed	Yes	1.48E-04	7	Particle-bound
63	126-98-7	2-Methyl-2-propenenitrile (Methacrylonitrile)	Feed	-	2.44E-01	16	Vapor
64	127-18-4	Perchloroethylene (tetrachloroethylene)	Feed	Yes	1.75E+01	21	Vapor
65	127-19-5	N,N-Dimethylacetamide	Feed	-	1.29E-05	5	Vapor
66	128-37-0	2,6-Bis(tert-butyl)-4-methylphenol	Feed	-	4.07E-03	32	Vapor
67	129-00-0	Pyrene	Feed	Yes	1.17E-02	33	Particle-bound
68	1321-64-8	Pentachloronaphthalene	Feed	Yes	1.16E-01	14	Particle-bound
69	1321-65-9	Trichloronaphthalene	Feed	-	2.11E-01	15	Particle-bound
70	132-64-9	Dibenzofuran	Feed	Yes	2.10E-01	15	Particle-bound
71	1335-87-1	Hexachloronaphthalene	Feed	-	8.59E-02	14	Particle-bound
72	1335-88-2	Tetrachloronaphthalene	Feed	-	1.57E-01	15	Particle-bound
73	1336-36-3	Polychlorinated biphenyls (PCBs)	Feed	Yes	4.10E-01	35	Vapor
74	141-78-6	Acetic acid ethyl ester (Ethyl acetate)	Feed	-	1.32E-01	14	Vapor
75	141-79-7	4-Methyl-3-penten-2-one	Feed	-	3.62E-02	13	Vapor
76	142-82-5	n-Heptane	Feed	-	1.97E+03	27	Vapor

Table 2 List of Organic COPCs and PICs

#	CAS Registry Number	Compound	Source	SSFM Indicator?	Henry's Law Constant (bar*m^3/kgmol)	Henry's Law-Based Grouping	Offgas Phase Type
77	144-62-7	Oxalic acid	Feed	Yes	1.41E-07	3	Vapor
78	156-60-5	trans-1,2-Dichloroethylene	Feed	-	9.26E+00	20	Vapor
79	1634-04-4	Methyl tert-butyl ether	Feed	-	5.79E-01	16	Vapor
80	189-55-9	Dibenzo[a,i]pyrene	Feed	-	1.39E-05	5	Particle
81	189-64-0	Dibenzo[a,h]pyrene	Feed	-	1.39E-05	5	Particle
82	191-24-2	Benzo(g,h,i)perylene	Feed	-	3.27E-04	30	Particle-bound
83	191-30-0	Benzo[a,i]pyrene	Feed	-	1.39E-05	5	Particle
84	192-65-4	Dibenzo[a,e]pyrene	Feed	-	1.39E-05	5	Particle
85	193-39-5	Indeno(1,2,3-cd)pyrene	Feed	Yes	3.43E-04	30	Particle
86	206-44-0	Fluoranthene	Feed	Yes	8.74E-03	33	Particle-bound
87	208-96-8	Acenaphthylene	Feed	Yes	1.13E-01	14	Vapor
88	2234-13-1	Octachloronaphthalene	Feed	-	1.01E-01	14	Particle-bound
89	224-42-0	Dibenz[a,j]acridine	Feed	-	1.88E-06	4	Particle-bound
90	226-36-8	Dibenz[a,h]acridine	Feed	-	1.88E-06	4	Particle-bound
91	25551-13-7	Trimethyl benzene	Feed	-	7.15E+00	19	Vapor
92	26140-60-3	Terphenyls	Feed	Yes	3.14E-02	34	Particle-bound
93	27154-33-2	Trichlorofluoroethane	Feed	-	1.23E+02	23	Vapor
94	287-92-3	Cyclopentane	Feed	-	1.86E+02	24	Vapor
95	31508-00-6	2,3',4,4',5-Pentachlorobiphenyl (PBC 118)	Feed	-	2.84E-01	35	Particle-bound
96	32598-13-3	3,3',4,4'-Tetrachlorobiphenyl (TCB)	Feed	-	9.28E-03	33	Particle-bound
97	32598-14-4	2,3,3',4,4'-Pentachlorobiphenyl (PCB 105)	Feed	-	8.14E-01	17	Particle-bound
98	32774-16-6	3,3',4,4',5,5'-Hexachlorobiphenyl	Feed	-	6.76E-02	34	Particle-bound
99	35065-29-3	2,2',3,4,4',5,5'-Heptachlorobiphenyl	Feed	-	9.87E-03	33	Particle-bound
100	35065-30-6	2,2',3,3',4,4',5-Heptachlorobiphenyl	Feed	-	8.88E-03	33	Particle-bound
101	3697-24-3	5-Methylchrysene	Feed	Yes	5.46E-03	32	Particle-bound
102	3825-26-1	Ammonium perfluorooctanoate	Feed	-	9.87E-02	14	Vapor
103	38380-08-4	2,3,3',4,4',5-Hexachlorobiphenyl (PCB 157)	Feed	-	9.55E-03	14	Particle-bound
104	39635-31-9	2,3,3',4,4',5,5'-Heptachlorobiphenyl	Feed	-	3.82E-01	33	Particle-bound
105	4170-30-3	2-Butenaldehyde (2-Butenal)	Feed	Yes	9.55E-03	11	Vapor
106	50-00-0	Formaldehyde	Feed	-	3.33E-04	8	Vapor
107	50-32-8	Benzo(a)pyrene	Feed	Yes	4.51E-04	30	Particle-bound
108	52663-72-6	2,3',4,4',5,5'-Hexachlorobiphenyl	Feed	-	6.76E-02	34	Particle-bound
109	53-70-3	Dibenzo(a,h)anthracene	Feed	-	1.21E-04	7	Particle-bound
110	540-59-0	1,2-Dichloroethylene	Feed	-	4.03E+00	19	Vapor
111	540-84-1	2,2,4-Trimethylpentane	Feed	-	3.00E+03	28	Vapor
112	541-73-1	1,3-Dichlorobenzene	Feed	-	2.60E+00	19	Vapor
113	56-23-5	Carbon tetrachloride	Feed	Yes	2.72E+01	22	Vapor
114	563-80-4	3-Methyl-2-butanone	Feed	-	9.60E-02	14	Vapor

Table 2 List of Organic COPCs and PICs

#	CAS Registry Number	Compound	Source	SSFM Indicator?	Henry's Law Constant (bar*m^3/kgmol)	Henry's Law-Based Grouping	Offgas Phase Type
115	56-49-5	3-Methylcholanthrene	Feed	-	2.97E+03	28	Particle-bound
116	57-14-7	1,1-Dimethylhydrazine	Feed	Yes	1.23E-02	12	Vapor
117	57465-28-8	3,3',4,4',5-Pentachlorobiphenyl	Feed	-	2.84E-01	15	Particle-bound
118	58-90-2	2,3,4,6-Tetrachlorophenol	Feed	Yes	8.72E-03	11	Vapor
119	591-78-6	2-Hexanone	Feed	-	9.20E-02	14	Vapor
120	59-50-7	4-Chloro-3-methylphenol	Feed	-	2.42E-03	32	Vapor
121	59-89-2	N-Nitrosomorpholine	Feed	Yes	2.42E-05	6	Vapor
122	602-87-9	5-Nitroacenaphthene	Feed	-	1.10E-03	9	Particle-bound
123	60-29-7	Ethyl ether	Feed	-	1.21E+00	17	Vapor
124	603-34-9	Triphenylamine	Feed	Yes	5.34E-03	32	Vapor
125	60-34-4	Methylhydrazine	Feed	-	2.99E-03	10	Vapor
126	60-35-5	Acetamide	Feed	Yes	1.11E-05	5	Vapor
127	621-64-7	Di-n-Propylnitrosamine	Feed	Yes	5.31E-03	10	Vapor
128	624-83-9	Methyl isocyanate	Feed	-	9.14E-01	17	Vapor
129	627-13-4	Nitric acid, propyl ester	Feed	-	1.25E+00	17	Vapor
130	62-75-9	N-Nitroso-N,N-dimethylamine	Feed	Yes	1.80E-03	9	Vapor
131	630-20-6	1,1,1,2-Tetrachloroethane	Feed	-	2.39E+00	18	Vapor
132	64-17-5	Ethyl alcohol	Feed	-	4.93E-03	10	Vapor
133	64-18-6	Formic acid	Feed	-	1.65E-04	7	Vapor
134	64-19-7	Acetic acid	Feed	Yes	9.87E-05	6	Vapor
135	65510-44-3	2',3,4,4',5-Pentachlorobiphenyl	Feed	-	2.84E-01	15	Particle-bound
136	67-56-1	Methyl alcohol (Methanol)	Feed	-	4.49E-03	10	Vapor
137	67-63-0	2-Propyl alcohol (Isopropanol)	Feed	-	7.99E-03	11	Vapor
138	67-64-1	2-Propanone (Acetone)	Feed	-	3.92E-02	13	Vapor
139	67-66-3	Chloroform	Feed	-	3.62E+00	19	Vapor
140	67-72-1	Hexachloroethane	Feed	-	3.84E+00	19	Vapor
141	684-16-2	Hexafluoroacetone	Feed	-	3.03E+00	19	Vapor
142	69782-90-7	2,3,3',4,4',5'-Hexachlorobiphenyl	Feed	-	6.76E-02	34	Particle-bound
143	70362-50-4	3,4,4',5-Tetrachlorobiphenyl	Feed	-	9.28E-03	33	Particle-bound
144	71-23-8	n-Propyl alcohol	Feed	-	7.31E-03	11	Vapor
145	71-36-3	n-Butyl alcohol	Feed	-	8.69E-03	11	Vapor
146	71-43-2	Benzene	Feed	Yes	5.48E+00	19	Vapor
147	71-55-6	Methyl chloroform (1,1,1-Trichloroethane)	Feed	-	1.70E+01	21	Vapor
148	74472-37-0	2,3,4,4',5-Pentachlorobiphenyl	Feed	-	2.84E-01	15	Particle-bound
149	74-83-9	Bromomethane (Methyl bromide)	Feed	-	6.16E+00	19	Vapor
150	74-87-3	Chloromethane (Methyl chloride)	Feed	-	8.70E+00	20	Vapor
151	74-97-5	Bromochloromethane	Feed	-	1.44E+00	17	Vapor
152	74-99-7	Methylacetylene	Feed	-	1.09E+01	20	Vapor

Table 2 List of Organic COPCs and PICs

#	CAS Registry Number	Compound	Source	SSFM Indicator?	Henry's Law Constant (bar*m^3/kgmol)	Henry's Law-Based Grouping	Offgas Phase Type
153	75-00-3	Chloroethane	Feed	-	1.10E+01	20	Vapor
154	75-01-4	Vinyl chloride (1-Chloroethene)	Feed	-	2.74E+01	22	Vapor
155	75-05-8	Acetonitrile	Feed	Yes	3.40E-02	13	Vapor
156	75-07-0	Acetaldehyde	Feed	-	6.58E-02	13	Vapor
157	75-09-2	Dichloromethane (Methylene chloride)	Feed	-	3.21E+00	19	Vapor
158	75-12-7	Formamide	Feed	Yes	1.37E-06	4	Vapor
159	75-15-0	Carbon disulfide	Feed	-	1.42E+01	20	Vapor
160	75-21-8	Ethylene oxide (Oxirane)	Feed	-	1.46E-01	15	Vapor
161	75-27-4	Bromodichloromethane	Feed	-	2.09E+00	18	Vapor
162	75-34-3	1,1-Dichloroethane	Feed	-	5.55E+00	19	Vapor
163	75-35-4	1,1-Dichloroethene (Vinylidene chloride)	Feed	-	2.58E+01	22	Vapor
164	75-43-4	Dichlorofluoromethane	Feed	-	1.07E+01	20	Vapor
165	75-45-6	Chlorodifluoromethane	Feed	-	4.01E+01	22	Vapor
166	75-50-3	Trimethylamine	Feed	-	1.03E-01	14	Vapor
167	75-52-5	Nitromethane	Feed	-	2.82E-02	13	Vapor
168	75-55-8	2-Methylaziridine	Feed	-	8.31E-03	11	Vapor
169	75-61-6	Difluorodibromomethane	Feed	-	3.04E+01	22	Vapor
170	75-63-8	Trifluorobromomethane	Feed	-	4.92E+02	25	Vapor
171	75-65-0	2-Methyl-2-propanol	Feed	-	8.93E-03	11	Vapor
172	75-69-4	Trichlorofluoromethane	Feed	-	9.57E+01	23	Vapor
173	75-71-8	Dichlorodifluoromethane	Feed	-	3.39E+02	25	Vapor
174	76-03-9	Trichloroacetic acid	Feed	-	1.33E-05	5	Vapor
175	76-11-9	1,1,1,2-Tetrachloro-2,2-difluoroethane	Feed	-	1.45E+02	24	Vapor
176	76-12-0	1,1,2,2-Tetrachloro-1,2-difluoroethane	Feed	-	1.12E+02	23	Vapor
177	76-13-1	1,2,2-Trichloro-1,1,2-trifluoroethane (Freon 113)	Feed	-	5.19E+02	25	Vapor
178	76-14-2	1,2-Dichloro-1,1,2,2-tetrafluoroethane	Feed	-	2.76E+03	28	Vapor
179	76-15-3	Chloropentafluoroethane	Feed	Yes	5.51E+03	29	Vapor
180	78-83-1	2-Methylpropyl alcohol (Isobutyl alcohol)	Feed	-	9.65E-03	11	Vapor
181	78-87-5	1,2-Dichloropropane	Feed	-	2.78E+00	19	Vapor
182	78-92-2	1-Methylpropyl alcohol (2-Butanol)	Feed	-	8.94E-03	11	Vapor
183	78-93-3	Methyl ethyl ketone (MEK, 2-Butanone)	Feed	-	5.62E-02	13	Vapor
184	79-00-5	1,1,2-Trichloroethane	Feed	-	8.13E-01	17	Vapor
185	79-01-6	Trichloroethylene	Feed	Yes	9.72E+00	20	Vapor
186	79-09-4	Propionic acid	Feed	-	4.39E-04	8	Vapor
187	79-10-7	2-Propenoic acid	Feed	-	3.65E-04	8	Vapor
188	79-20-9	Methyl acetate	Feed	-	1.13E-01	14	Vapor
189	79-34-5	1,1,2,2-Tetrachloroethane	Feed	-	3.62E-01	16	Vapor
190	83-32-9	Acenaphthene	Feed	Yes	1.82E-01	15	Vapor

Table 2 List of Organic COPCs and PICs

#	CAS Registry Number	Compound	Source	SSFM Indicator?	Henry's Law Constant (bar*m^3/kgmol)	Henry's Law-Based Grouping	Offgas Phase Type
191	84-66-2	Diethyl phthalate	Feed	Yes	6.02E-04	8	Vapor
192	84-74-2	Dibutyl phthalate	Feed	Yes	1.79E-03	31	Particle-bound
193	85-01-8	Phenanthrene	Feed	-	4.17E-02	13	Particle-bound
194	85-68-7	Butylbenzyl phthalate	Feed	-	1.24E-03	31	Particle-bound
195	86-73-7	Fluorene	Feed	-	9.49E-02	14	Vapor
196	87-68-3	Hexachlorobutadiene	Feed	Yes	1.02E+01	20	Vapor
197	88-06-2	2,4,6-Trichlorophenol	Feed	-	2.57E-03	10	Vapor
198	88-72-2	2-Nitrotoluene	Feed	-	1.23E-02	12	Vapor
199	88-75-5	2-Nitrophenol	Feed	-	1.26E-02	12	Vapor
200	88-89-1	Picric acid	Feed	Yes	1.68E-08	2	Particle-bound
201	91-20-3	Naphthalene	Feed	Yes	4.34E-01	16	Vapor
202	91-22-5	Quinoline	Feed	-	1.65E-03	9	Vapor
203	91-58-7	2-Chloronapthalene	Feed	-	3.16E-01	16	Vapor
204	92-52-4	1,1`-Biphenyl	Feed	-	3.04E-01	16	Vapor
205	92-93-3	4-Nitrobiphenyl	Feed	-	3.49E-03	10	Particle-bound
206	95-13-6	Indene	Feed	-	1.57E+00	18	Vapor
207	95-47-6	o-Xylene	Feed	-	5.11E+00	19	Vapor
208	95-48-7	o-Cresol (2-Methylphenol)	Feed	-	1.18E-03	9	Vapor
209	95-49-8	2-Chlorotoluene	Feed	-	3.52E+00	19	Vapor
210	95-50-1	o-Dichlorobenzene (1,2-Dichlorobenzene)	Feed	Yes	1.89E+00	18	Vapor
211	95-57-8	2-Chlorophenol	Feed	-	1.11E-02	11	Vapor
212	95-95-4	2,4,5-Trichlorophenol	Feed	-	1.60E-03	9	Vapor
213	96-22-0	3-Pentanone	Feed	-	8.76E-02	14	Vapor
214	96-69-5	Bis(3-tert-butyl-4-hydroxy-6-methyl-phenyl)sulfide	Feed	-	2.83E+00	19	Vapor
215	98-51-1	p-tert-Butyltoluene	Feed	-	1.51E+01	21	Vapor
216	98-82-8	Cumene	Feed	-	1.13E+01	20	Vapor
217	98-83-9	alpha-Methylstyrene	Feed	-	2.52E+00	19	Vapor
218	98-86-2	Acetophenone	Feed	Yes	1.03E-02	11	Vapor
219	98-95-3	Nitrobenzene	Feed	-	2.37E-02	12	Vapor
1	100-02-7	4-Nitrophenol	Pic	-	-	-	Particle-bound
2	100-25-4	1,4-Dinitrobenzene	Pic	-	-	-	Particle-bound
3	100-44-7	Benzyl chloride	Pic	-	-	-	Vapor
4	100-51-6	Benzyl alcohol	Pic	-	-	-	Vapor
5	100-52-7	Benzaldehyde	Pic	-	-	-	Vapor
6	101-77-9	4,4-Methylenedianiline	Pic	-	-	-	Vapor
7	103-33-3	Azobenzene	Pic	-	-	-	Vapor
8	103-65-1	n-Propyl benzene (Isocumene)	Pic	-	-	-	Vapor
9	104-51-8	n-Butylbenzene	Pic	-	-	-	Vapor

Table 2 List of Organic COPCs and PICs

#	CAS Registry Number	Compound	Source	SSFM Indicator?	Henry's Law Constant (bar*m^3/kgmol)	Henry's Law-Based Grouping	Offgas Phase Type
10	105-67-9	2,4-Dimethylphenol	Pic	-	-	-	Vapor
11	106-43-4	4-Chlorotoluene (p-Tolyl chloride)	Pic	-	-	-	Vapor
12	106-44-5	p-Cresol (4-Methyl phenol)	Pic	-	-	-	Vapor
13	106-47-8	p-Chloroaniline	Pic	-	-	-	Vapor
14	106-49-0	p-Toluidine	Pic	-	-	-	Vapor
15	106-51-4	Quinone	Pic	-	-	-	Vapor
16	106-89-8	EPichlorohydrin (1-chloro-2,3-epoxypropane)	Pic	-	-	-	Vapor
17	107-19-7	Propargyl alcohol	Pic	-	-	-	Vapor
18	107-21-1	Ethylene glycol	Pic	-	-	-	Vapor
19	107-98-2	Propylene gylcol monomethyl ether	Pic	-	-	-	Vapor
20	108-60-1	Dichloroisopropyl ether	Pic	-	-	-	Vapor
21	108-67-8	1,3,5-Trimethyl benzene	Pic	-	-	-	Vapor
22	108-86-1	Bromobenzene (Phenyl bromide)	Pic	-	-	-	Vapor
23	109-77-3	Malononitrile	Pic	-	-	-	Vapor
24	109-86-4	2-Methoxyethanol	Pic	-	-	-	Vapor
25	110-80-5	2-Ethoxyethanol	Pic	-	-	-	Vapor
26	111-15-9	Ethylene glycol monoethyl ether acetate	Pic	-	-	-	Vapor
27	111-44-4	Bis(2-chloroethyl) ether	Pic	-	-	-	Vapor
28	111-91-1	Bis(2-chloroethoxy)methane	Pic	-	-	-	Particle-bound
29	1120-71-4	1,3-Propane sultone	Pic	-	-	-	Vapor
30	118-74-1	Hexachlorobenzene	Pic	-	-	-	Vapor
31	119-90-4	3,3'-Dimethoxybenzidine (ortol-dianisidine)	Pic	-	-	-	Particle-bound
32	121-14-2	2,4-Dinitrotoluene	Pic	-	-	-	Particle-bound
33	122-66-7	1,2-Diphenylhydrazine	Pic	-	-	-	Vapor
34	123-33-1	Maleic hydrazide	Pic	-	-	-	Vapor
35	124-48-1	Chlorodibromomethane	Pic	-	-	-	Vapor
36	131-11-3	Dimethylphthalate	Pic	-	-	-	Vapor
37	131-89-5	2-Cyclohexyl-4,6-dinitrophenol	Pic	-	-	-	Particle-bound
38	133-06-2	Captan	Pic	-	-	-	Vapor
39	135-98-8	sec-Butylbenzene	Pic	-	-	-	Vapor
40	145-73-3	Endothall	Pic	-	-	-	Particle
41	156-59-2	cis-1,2-Dichloroethene	Pic	-	-	-	Vapor
42	1746-01-6	2,3,7,8-Tetrachlorodibenzo(p)dioxin (TCDD)	Pic	-	-	-	Particle-bound
43	192-97-2	Benzo(e)pyrene	Pic	-	-	-	Particle-bound
44	19408-74-3	1,2,3,7,8,9-Hexachlorodibenzo(p)dioxin	Pic	-	-	-	Particle
45	205-82-3	Benzo(j)fluoranthene	Pic	-	-	-	Particle-bound
46	205-99-2	Benzo(b)fluoranthene	Pic	-	-	-	Particle-bound
47	207-08-9	Benzo(k)fluoranthene	Pic	-	-	-	Particle-bound

Table 2 List of Organic COPCs and PICs

#	CAS Registry Number	Compound	Source	SSFM Indicator?	Henry's Law Constant (bar*m^3/kgmol)	Henry's Law-Based Grouping	Offgas Phase Type
48	218-01-9	Chrysene	Pic	-	-	-	Particle-bound
49	23950-58-5	Pronamide	Pic	-	-	-	Particle-bound
50	25013-15-4	Methyl styrene (mixed isomers)	Pic	-	-	-	Vapor
51	319-84-6	Hexachlorocyclohexane (Lindane) Alpha BHC	Pic	-	-	-	Vapor
52	319-85-7	Hexachlorocyclohexane (Lindane) Beta BHC	Pic	-	-	-	Particle-bound
53	3268-87-9	Octachlorodibenzo(p)dioxin	Pic	-	-	-	Particle
54	35822-46-9	1,2,3,4,6,7,8-Heptachlorodibenzo(p)dioxin	Pic	-	-	-	Particle
55	39001-02-0	Octachlorodibenzofuran	Pic	-	-	-	Particle
56	39227-28-6	1,2,3,4,7,8-Hexachlorodibenzo(p)dioxin	Pic	-	-	-	Particle
57	40321-76-4	1,2,3,7,8-Pentachlorodibenzo(p)dioxin	Pic	-	-	-	Particle-bound
58	41851-50-7	Chlorocyclopentadiene	Pic	-	-	-	Vapor
59	460-19-5	Cyanogen	Pic	-	-	-	Vapor
60	506-68-3	Cyanogen bromide	Pic	-	-	-	Vapor
61	506-77-4	Cyanogen chloride	Pic	-	-	-	Vapor
62	510-15-6	Chlorobenzilate	Pic	-	-	-	Particle-bound
63	51207-31-9	2,3,7,8-Tetrachlorodibenzofuran	Pic	-	-	-	Particle-bound
64	51-28-5	2,4-Dinitrophenol	Pic	-	-	-	Vapor
65	51-79-6	Ethyl Carbamate (urethane)	Pic	-	-	-	Vapor
66	528-29-0	o-Dinitrobenzene	Pic	-	-	-	Particle-bound
67	532-27-4	2-Chloroacetophenone	Pic	-	-	-	Vapor
68	534-52-1	4,6-Dinitro-o-cresol	Pic	-	-	-	Vapor
69	5385-75-1	Dibenzo(a,e)fluoranthene	Pic	-	-	-	Particle
70	540-73-8	1,2-Dimethylhydrazine	Pic	-	-	-	Vapor
71	542-75-6	1,3-Dichloropropene	Pic	-	-	-	Vapor
72	542-88-1	Dichloromethyl ether	Pic	-	-	-	Vapor
73	55673-89-7	1,2,3,4,7,8,9-Heptachlorodibenzofuran	Pic	-	-	-	Particle
74	56-55-3	Benzo(a)anthracene	Pic	-	-	-	Particle-bound
75	57117-31-4	2,3,4,7,8-Pentachlorodibenzofuran	Pic	-	-	-	Particle-bound
76	57117-41-6	1,2,3,7,8-Pentachlorodibenzofuran	Pic	-	-	-	Particle-bound
77	57117-44-9	1,2,3,6,7,8-Hexachlorodibenzofuran	Pic	-	-	-	Particle-bound
78	57-24-9	Strychnine	Pic	-	-	-	Particle
79	57653-85-7	1,2,3,6,7,8-Hexachlorodibenzo(p)dioxin	Pic	-	-	-	Particle
80	57-74-9	Chlordane	Pic	-	-	-	Particle-bound
81	58-89-9	gamma-BHC (Lindane)	Pic	-	-	-	Vapor
82	584-84-9	2,4-Toluene diisocyante	Pic	-	-	-	Vapor
83	593-60-2	Bromoethene	Pic	-	-	-	Vapor
84	60-11-7	Dimethyl aminoazobenzene	Pic	-	-	-	Particle-bound
85	606-20-2	2,6-Dinitrotoluene	Pic	-	-	-	Vapor

Table 2 List of Organic COPCs and PICs

#	CAS Registry Number	Compound	Source	SSFM Indicator?	Henry's Law Constant (bar*m^3/kgmol)	Henry's Law-Based Grouping	Offgas Phase Type
86	60851-34-5	2,3,4,6,7,8-Hexachlorodibenzofuran	Pic	-	-	-	Particle-bound
87	608-93-5	Pentachlorobenzene	Pic	-	-	-	Vapor
88	61626-71-9	Dichloropentadiene	Pic	-	-	-	Vapor
89	62-50-0	Ethyl methanesulfonate	Pic	-	-	-	Vapor
90	62-53-3	Aniline	Pic	-	-	-	Vapor
91	65-85-0	Benzoic acid	Pic	-	-	-	Vapor
92	67562-39-4	1,2,3,4,6,7,8-Heptachlorodibenzofuran	Pic	-	-	-	Particle
93	70-30-4	Hexachlorophene	Pic	-	-	-	Particle
94	70648-26-9	1,2,3,4,7,8-Hexachlorodibenzofuran	Pic	-	-	-	Particle-bound
95	72-43-5	Methoxychlor	Pic	-	-	-	Particle-bound
96	72-55-9	4,4'-DDE	Pic	-	-	-	Particle-bound
97	72918-21-9	1,2,3,7,8,9-Hexachlorodibenzofuran	Pic	-	-	-	Particle-bound
98	74-88-4	Iodomethane (Methyl iodide)	Pic	-	-	-	Vapor
99	74-95-3	Methylene bromide	Pic	-	-	-	Vapor
100	75-25-2	Bromoform	Pic	-	-	-	Vapor
101	75-29-6	2-Chloropropane	Pic	-	-	-	Vapor
102	75-44-5	Phosgene	Pic	-	-	-	Vapor
103	76-01-7	Pentachloroethane	Pic	-	-	-	Vapor
104	76-44-8	Heptachlor	Pic	-	-	-	Vapor
105	764-41-0	1,4-Dichloro-2-butene	Pic	-	-	-	Vapor
106	765-34-4	Glycidylaldehyde	Pic	-	-	-	Vapor
107	77-47-4	Hexachlorocyclopentadiene	Pic	-	-	-	Vapor
108	77-78-1	Dimethyl sulfate	Pic	-	-	-	Vapor
109	80-62-6	Methyl methacrylate	Pic	-	-	-	Vapor
110	82-68-8	Pentachloronitrobenzene (PCBN)	Pic	-	-	-	Vapor
111	822-06-0	Hexamethylene-1,5-diisocyanate	Pic	-	-	-	Vapor
112	823-40-5	Toluene-2,6-diamine	Pic	-	-	-	Vapor
113	85-44-9	Phthalic anhydride	Pic	-	-	-	Vapor
114	87-61-6	1,2,3-Trichlorobenzene	Pic	-	-	-	Vapor
115	87-86-5	Pentachlorophenol	Pic	-	-	-	Particle-bound
116	88-74-4	o-Nitroaniline (2-Nitroaniline)	Pic	-	-	-	Vapor
117	90-04-0	o-Anisidine	Pic	-	-	-	Vapor
118	91-57-6	2-Methylnaphthalene	Pic	-	-	-	Vapor
119	91-94-1	3,3'-Dichlorobenzidine	Pic	-	-	-	Particle-bound
120	924-16-3	N-Nitrosodi-n-butylamine	Pic	-	-	-	Vapor
121	94-59-7	Safrole	Pic	-	-	-	Vapor
122	94-75-7	2,4-D and esters (160C typed)	Pic	-	-	-	Particle-bound
123	95-53-4	o-Toluidine	Pic	-	-	-	Vapor

Table 2 List of Organic COPCs and PICs

#	CAS Registry Number	Compound	Source	SSFM Indicator?	Henry's Law Constant (bar*m^3/kgmol)	Henry's Law-Based Grouping	Offgas Phase Type
124	95-63-6	1,2,4-Trimethyl benzene	Pic	-	-	-	Vapor
125	95-94-3	1,2,4,5-Tetrachlorobenzene	Pic	-	-	-	Vapor
126	96-12-8	1,2-Dibromo-3-chloropropane	Pic	-	-	-	Vapor
127	96-18-4	1,2,3-Trichloropropane	Pic	-	-	-	Vapor
128	96-45-7	Ethylene thiourea	Pic	-	-	-	Vapor
129	97-63-2	Ethyl methacrylate	Pic	-	-	-	Vapor
130	98-01-1	Furfural	Pic	-	-	-	Vapor
131	98-06-6	tert-Butyl benzene	Pic	-	-	-	Vapor
132	98-07-7	Benzotrichloride	Pic	-	-	-	Vapor
133	99-35-4	1,3,5-Trinitrobenzene	Pic	-	-	-	Particle-bound
134	99-65-0	1,3-Dinitrobenzene	Pic	-	-	-	Vapor
135	99-87-6	p-Cymene	Pic	-	-	-	Vapor

Table 3 List of Inorganic COPCs and Criteria Pollutants

CAS Registry Number	Constituent	Constituent Family	SSFM Indicator?	Phase
14265-44-2	Phosphate	Non-metals and Anions	Yes	Particle
14280-30-9	Hydroxide	Non-metals and Anions	Yes	Particle
14797-55-8	Nitrate	Non-metals and Anions	Yes	Particle
14797-65-0	Nitrite	Non-metals and Anions	Yes	Particle
14808-79-8	Sulfate	Non-metals and Anions	Yes	Particle
16887-00-6	Chloride	Non-metals and Anions	Yes	Particle
16984-48-8	Fluoride	Non-metals and Anions	Yes	Particle
18540-29-9	Chromium (hexavalent)	Metals	Yes	Particle
24959-67-9	Bromide	Non-metals and Anions	-	Particle
57-12-5	Cyanide	Non-metals and Anions	-	Vapor
63705-05-5	Total Sulfur	Non-metals and Anions	Yes	Particle
7429-90-5	Aluminum	Metals	Yes	Particle
7439-89-6	Iron	Metals	Yes	Particle
7439-92-1	Lead	Metals	Yes	Particle
7439-93-2	Lithium	Metals	Yes	Particle
7439-95-4	Magnesium	Metals	Yes	Particle
7439-96-5	Manganese	Metals	Yes	Particle
7439-97-6	Mercury	Metals	Yes	Vapor
7439-98-7	Molybdenum	Metals	-	Particle
7440-02-0	Nickel	Metals	Yes	Particle
7440-09-7	Potassium	Metals	Yes	Particle
7440-16-6	Rhodium	Metals	Yes	Particle
7440-21-3	Silicon	Metals	Yes	Particle
7440-22-4	Silver	Metals	Yes	Particle
7440-23-5	Sodium	Metals	Yes	Particle
7440-24-6	Strontium (total)	Metals	Yes	Particle
7440-25-7	Tantalum	Metals	-	Particle
7440-28-0	Thallium	Metals	-	Particle
7440-31-5	Tin	Metals	-	Particle
7440-33-7	Tungsten	Metals	-	Particle
7440-36-0	Antimony	Metals	-	Particle
7440-38-2	Arsenic	Metals	Yes	Particle
7440-39-3	Barium	Metals	Yes	Particle
7440-41-7	Beryllium	Metals	-	Particle
7440-42-8	Boron	Metals	Yes	Particle
7440-43-9	Cadmium	Metals	Yes	Particle
7440-48-4	Cobalt	Metals	-	Particle
7440-50-8	Copper	Metals	Yes	Particle
7440-61-1	Uranium	Metals	-	Particle
7440-62-2	Vanadium	Metals	-	Particle

Table 3 List of Inorganic COPCs and Criteria Pollutants

CAS Registry Number	Constituent	Constituent Family	SSFM Indicator?	Phase
7440-65-5	Yttrium	Metals	-	Particle
7440-66-6	Zinc	Metals	Yes	Particle
7440-67-7	Zirconium	Metals	Yes	Particle
7440-69-9	Bismuth	Metals	Yes	Particle
7440-70-2	Calcium	Metals	Yes	Particle
7553-56-2	Iodine (I2)	Non-metals and Anions	-	Vapor
7647-01-0	Hydrochloric Acid	Acid gas	Yes	Vapor
7664-39-3	Hydrofluoric Acid	Acid gas	Yes	Vapor
7664-41-7	Ammonia	Non-metals and Anions	Yes	Vapor
7723-14-0	Phosphorous	Non-metals and Anions	-	Particle
7782-49-2	Selenium	Metals	-	Particle
10028-15-6	Ozone	Criteria Pollutant	-	Vapor
10102-44-0	Nitrogen dioxide	Criteria Pollutant	Yes	Vapor
10102-43-9	Nitric oxide	Criteria Pollutant	Yes	Vapor
630-08-0	Carbon monoxide	Criteria Pollutant	Yes	Vapor
7446-09-5	Sulfur dioxide	Criteria Pollutant	Yes	Vapor
no cas #	particulate matter	Criteria Pollutant	-	Particle

Table 4 List of Radionuclide COPCs

CAS Registry Number	Constituent	SSFM Indicator?	Offgas Phase
10028-17-8	Tritium	Yes	Vapor
10045-97-3	Cesium-137	Yes	Particle
10098-91-6	Yttrium-90	-	Particle
10098-97-2	Strontium-90	Yes	Particle
10198-40-0	Cobalt-60	Yes	Particle
13966-29-5	Uranium-234	Yes	Particle
13967-48-1	Ruthenium-106	-	Particle
13967-70-9	Cesium-134	-	Particle
13968-55-3	Uranium-233	Yes	Particle
13981-15-2	Curium-244	Yes	Particle
13981-16-3	Plutonium-238	Yes	Particle
13981-37-8	Nickel-63	Yes	Particle
13981-97-0	Barium-137m	-	Particle
13982-10-0	Plutonium-242	Yes	Particle
13982-63-3	Radium-226	-	Particle
13982-70-2	Uranium-236	Yes	Particle
13994-20-2	Neptunium-237	Yes	Particle
14119-32-5	Plutonium-241	Yes	Particle
14119-33-6	Plutonium-240	Yes	Particle
14133-76-7	Technetium-99	Yes	Particle
14158-29-3	Uranium-232	-	Particle
14234-35-6	Antimony-125	Yes	Particle
14331-85-2	Protactinium-231	-	Particle
14336-70-0	Nickel-59	-	Particle
14391-16-3	Europium-155	Yes	Particle
14596-10-2	Americium-241	Yes	Particle
14683-23-9	Europium-152	Yes	Particle
14762-75-5	Carbon-14	Yes	Vapor
14952-40-0	Actinium-227	-	Particle
14993-75-0	Americium-243	Yes	Particle
15046-84-1	Iodine-129	Yes	Vapor
15117-48-3	Plutonium-239	Yes	Particle
15117-96-1	Uranium-235	Yes	Particle
15262-20-1	Radium-228	-	Particle
15510-73-3	Curium-242	-	Particle
15585-10-1	Europium-154	Yes	Particle
15594-54-4	Thorium-229	-	Particle
15715-94-3	Samarium-151	Yes	Particle
15751-77-6	Zirconium-93	-	Particle
15757-87-6	Curium-243	Yes	Particle
15832-50-5	Tin-126	Yes	Particle
7440-03-1	Niobium-93m	-	Particle
7440-29-1	Thorium-232	Yes	Particle
7440-61-1	Uranium-238	Yes	Particle
14336-66-4	Cadmium-113m	-	Particle
15758-45-9	Selenium-79	-	Particle

Table 5 Representative Compounds for Inorganics and Radionuclides

Radionuclide		Metals		Non-metals and Anions	
Unanalyzed Compound	Representative Compounds	Unanalyzed Compound	Representative Compounds	Unanalyzed Compound	Representative Compounds
Cs-134	Cs-137	Be	Zr	CN	PO_4
Ba-137m	Cs-137	Y	Sr-90	-	-
Ra-226	Zr	V	Bi	-	-
Ra-228	Zr	Ta	Zr	-	-
Ac-227	Zr	Mo	Bi	-	-
Y-90	Sr-90	W	Zr	-	-
Zr-93	Zr	Co	Co-60	-	-
Nb-93m	Zr	Tl	F	-	-
Ni-59	Ni-63	Sn	Sn-126	-	-
Ru-106	F	Sb	Sb-125	-	-
Cd-113m	Cd	Se	F	-	-
Se-79	F	U	U-234	-	-
Th-229	Th-232	-	-	-	-
Pa-231	Zr	-	-	-	-
U-232	U-233	-	-	-	-
Pu-242	Pu-241	-	-	-	-
Am-243	Am-241	-	-	-	-
Cm-242	Cm-243	-	-	-	-

Table 6 Estimated Organic Feed Concentrations

CAS #	COPC	Conc (mg/L)	In SSFM
100-00-5	p-Nitrochlorobenzene	40	No
100-21-0	p-Phthalic acid	60	Yes
100-41-4	Ethyl benzene	4	No
100-42-5	Styrene	4	No
10061-01-5	cis-1,3-Dichloropropene	4	Yes
10061-02-6	trans-1,3-Dichloropropene	4	No
101-55-3	4-Bromophenylphenyl ether	60	No
101-84-8	Diphenyl ether	10	Yes
106-35-4	3-Heptanone	4	No
106-42-3	p-Xylene (Dimethyl benzene)	10	No
106-46-7	1,4-Dichlorobenzene	4	No
106-88-7	1,2-Epoxybutane	10	No
106-93-4	Ethylene dibromide (Dibromethane)	4	Yes
106-97-8	Butane	10	Yes
106-99-0	1,3-Butadiene	4	Yes
107-02-8	Acrolein	10	No
107-05-1	3-Chloropropene (Allyl chloride)	4	No
107-06-2	1,2-Dichloroethane (Ethylene chloride)	4	No
107-12-0	Propionitrile	10	No
107-13-1	Acrylonitrile	20	No
107-18-6	2-Propene-1-ol	60	No
107-31-3	Formic acid, methyl ester	60	No
107-66-4	Dibutylphosphate	60	No
107-87-9	2-Pentanone	20	No
108-03-2	1-Nitropropane	60	No
108-05-4	Vinyl acetate	60	No
108-10-1	Hexone (4-Methyl-2-pentanone or MIBK)	10	No
108-20-3	Bis(isopropyl)ether	10	No
108-38-3	m-Xylene (Dimethyl benzene)	10	No
108-39-4	m-Cresol	10	No
108-87-2	Methylcyclohexane	10	Yes
108-88-3	Toluene	4	Yes

Table 6 Estimated Organic Feed Concentrations

CAS #	COPC	Conc (mg/L)	In SSFM
108-90-7	Chlorobenzene	4	No
108-93-0	Cyclohexanol	10	No
108-94-1	Cyclohexanone	10	No
108-95-2	Phenol	60	Yes
109-66-0	n-Pentane	10	No
109-99-9	Tetrahydrofuran	4	No
110-12-3	5-Methyl-2-hexanone	4	No
110-43-0	2-Heptanone	4	No
110-54-3	n-Hexane	10	Yes
110-62-3	n-Valeraldehyde	60	No
110-82-7	Cyclohexane	10	Yes
110-83-8	Cyclohexene	4	No
110-86-1	Pyridine	20	No
111-65-9	n-Octane	10	No
111-76-2	Ethylene glycol monobutyl ether	60	No
111-84-2	n-Nonane	10	Yes
117-81-7	Bis(2-ethylhexyl)phthalate (DEHP)	60	No
117-84-0	n-Dioctyl phthalate	60	No
120-12-7	Anthracene	60	Yes
120-82-1	1,2,4-Trichlorobenzene	10	Yes
120-83-2	2,4-Dichlorophenol	60	No
121-44-8	Triethylamine	10	No
121-69-7	Dimethylaniline	10	No
122-39-4	N,N-Diphenylamine	20	Yes
123-19-3	4-Heptanone	4	No
123-38-6	n-Propionaldehyde	20	No
123-51-3	3-Methyl-1-butanol	10	No
123-86-4	Acetic acid n-butyl ester	0.2	No
123-91-1	1,4-Dioxane	2	No
126-73-8	Tributyl phosphate	40	Yes
126-98-7	2-Methyl-2-propenenitrile (Methacrylonitrile)	10	No
127-18-4	Perchloroethylene (tetrachloroethylene)	4	Yes

Table 6 Estimated Organic Feed Concentrations

CAS #	COPC	Conc (mg/L)	In SSFM
127-19-5	N,N-Dimethylacetamide	10	No
128-37-0	2,6-Bis(tert-butyl)-4-methylphenol	20	No
129-00-0	Pyrene	60	Yes
1321-64-8	Pentachloronaphthalene	60	Yes
1321-65-9	Trichloronaphthalene	60	No
132-64-9	Dibenzofuran	60	Yes
1335-87-1	Hexachloronaphthalene	60	No
1335-88-2	Tetrachloronaphthalene	60	No
1336-36-3	Polychlorinated biphenyls (PCBs)	0.4	Yes
141-78-6	Acetic acid ethyl ester (Ethyl acetate)	0.2	No
141-79-7	4-Methyl-3-penten-2-one	60	No
142-82-5	n-Heptane	10	No
144-62-7	Oxalic acid	3,000	Yes
156-60-5	trans-1,2-Dichloroethylene	10	No
1634-04-4	Methyl tert-butyl ether	10	No
189-55-9	Dibenzo[a,i]pyrene	60	No
189-64-0	Dibenzo[a,h]pyrene	60	No
191-24-2	Benzo(g,h,i)perylene	60	No
191-30-0	Benzo[a,i]pyrene	60	No
192-65-4	Dibenzo[a,e]pyrene	60	No
193-39-5	Indeno(1,2,3-cd)pyrene	60	Yes
206-44-0	Fluoranthene	60	Yes
208-96-8	Acenaphthylene	60	Yes
2234-13-1	Octachloronaphthalene	0.2	No
224-42-0	Dibenz[a,j]acridine	60	No
226-36-8	Dibenz[a,h]acridine	60	No
2551-13-7	Trimethyl benzene	10	No
26140-60-3	Terphenyls	60	Yes
27154-33-2	Trichlorofluoroethane	10	No
287-92-3	Cyclopentane	10	No
3697-24-3	5-Methylchrysene	60	Yes
3825-26-1	Ammonium perfluorooctanoate	60	No

Table 6 Estimated Organic Feed Concentrations

CAS #	COPC	Conc (mg/L)	In SSFM
4170-30-3	2-Butenaldehyde (2-Butenal or Crotonaldehyde)	10	Yes
50-00-0	Formaldehyde	10	No
50-32-8	Benzo(a)pyrene	38	Yes
53-70-3	Dibenzo(a,h)anthracene	38	No
540-59-0	1,2-Dichloroethylene	10	No
540-84-1	2,2,4-Trimethylpentane	10	No
541-73-1	1,3-Dichlorobenzene	4	No
56-23-5	Carbon tetrachloride	4	Yes
563-80-4	3-Methyl-2-butanone	10	No
56-49-5	3-Methylcholanthrene	60	No
57-14-7	1,1-Dimethylhydrazine	60	Yes
58-90-2	2,3,4,6-Tetrachlorophenol	60	Yes
591-78-6	2-Hexanone	10	No
59-50-7	4-Chloro-3-methylphenol	60	No
59-89-2	N-Nitrosomorpholine	60	Yes
602-87-9	5-Nitroacenaphthene	60	No
60-29-7	Ethyl ether	60	No
603-34-9	Triphenylamine	60	Yes
60-34-4	Methylhydrazine	10	No
60-35-5	Acetamide	10	Yes
621-64-7	Di-n-Propylnitrosamine (N-Nitroso-di-n-propylamine)	60	Yes
624-83-9	Methyl isocyanate	10	No
627-13-4	Nitric acid, propyl ester	5	No
62-75-9	N-Nitroso-N,N-dimethylamine (Dimethylnitrosamine)	60	Yes
630-20-6	1,1,1,2-Tetrachloroethane	10	No
64-17-5	Ethyl alcohol	10	No
64-18-6	Formic acid	15,000	No
64-19-7	Acetic acid	21,704	Yes
67-56-1	Methyl alcohol (Methanol)	10	No
67-63-0	2-Propyl alcohol (Isopropanol; Propan-2-01)	2	No
67-64-1	2-Propanone (Acetone)	20	No
67-66-3	Chloroform	4	No

Table 6 Estimated Organic Feed Concentrations

CAS #	COPC	Conc (mg/L)	In SSFM
67-72-1	Hexachloroethane	60	No
684-16-2	Hexafluoroacetone	10	No
71-23-8	n-Propyl alcohol	4	No
71-36-3	n-Butyl alcohol	10	No
71-43-2	Benzene	4	Yes
71-55-6	Methyl chloroform (1,1,1-Trichloroethane)	4	No
74-83-9	Bromomethane (Methyl bromide)	4	No
74-87-3	Chloromethane (Methyl chloride)	4	No
74-97-5	Bromochloromethane	10	No
74-99-7	Methylacetylene	60	No
75-00-3	Chloroethane	4	No
75-01-4	Vinyl chloride (1-Chloroethene)	4	No
75-05-8	Acetonitrile	10	Yes
75-07-0	Acetaldehyde	60	No
75-09-2	Dichloromethane (Methylene chloride)	4	No
75-12-7	Formamide	60	Yes
75-15-0	Carbon disulfide	10	No
75-21-8	Ethylene oxide (Oxirane)	2	No
75-27-4	Bromodichloromethane	10	No
75-34-3	1,1-Dichloroethane	4	No
75-35-4	1,1-Dichloroethene (Vinylidene chloride)	10	No
75-43-4	Dichlorofluoromethane	4	No
75-45-6	Chlorodifluoromethane	4	No
75-50-3	Trimethylamine	10	No
75-52-5	Nitromethane	60	No
75-55-8	2-Methylaziridine	60	No
75-61-6	Difluorodibromomethane	10	No
75-63-8	Trifluorobromomethane	10	No
75-65-0	2-Methyl-2-propanol	10	No
75-69-4	Trichlorofluoromethane	10	No
75-71-8	Dichlorodifluoromethane	10	No
76-03-9	Trichloroacetic acid	10	No

Table 6 Estimated Organic Feed Concentrations

CAS #	COPC	Conc (mg/L)	In SSFM
76-11-9	1,1,1,2-Tetrachloro-2,2-difluoroethane	60	No
76-12-0	1,1,2,2-Tetrachloro-1,2-difluoroethane	60	No
76-13-1	1,2,2-Trichloro-1,1,2-trifluoroethane (Freon 113)	10	No
76-14-2	1,2-Dichloro-1,1,2,2-tetrafluoroethane	10	No
76-15-3	Chloropentafluoroethane	10	Yes
78-83-1	2-Methylpropyl alcohol (Isobutyl alcohol)	60	No
78-87-5	1,2-Dichloropropane	4	No
78-92-2	1-Methylpropyl alcohol (2-Butanol)	4	No
78-93-3	Methyl ethyl ketone (MEK, 2-Butanone)	10	No
79-00-5	1,1,2-Trichloroethane	10	No
79-01-6	Trichloroethylene	10	Yes
79-09-4	Propionic acid	60	No
79-10-7	2-Propenoic acid	60	No
79-20-9	Methyl acetate	60	No
79-34-5	1,1,2,2-Tetrachloroethane	0.02	No
83-32-9	Acenaphthene	60	Yes
84-66-2	Diethyl phthalate	60	Yes
84-74-2	Dibutyl phthalate	60	Yes
85-01-8	Phenanthrene	60	No
85-68-7	Butylbenzyl phthalate	60	No
86-73-7	Fluorene	60	No
87-68-3	Hexachlorobutadiene	10	Yes
88-06-2	2,4,6-Trichlorophenol	60	No
88-72-2	2-Nitrotoluene	10	No
88-75-5	2-Nitrophenol	60	No
88-89-1	Picric acid	60	Yes
91-20-3	Naphthalene	2	Yes
91-22-5	Quinoline	60	No
91-58-7	2-Chloronapthalene	60	No
92-52-4	1,1`-Biphenyl	40	No
92-93-3	4-Nitrobiphenyl	60	No
95-13-6	Indene	60	No

Table 6 Estimated Organic Feed Concentrations

CAS #	COPC	Conc (mg/L)	In SSFM
95-47-6	o-Xylene	4	No
95-48-7	o-Cresol (2-Methylphenol)	10	No
95-49-8	2-Chlorotoluene	60	No
95-50-1	o-Dichlorobenzene (1,2-Dichlorobenzene)	4	Yes
95-57-8	2-Chlorophenol	60	No
95-95-4	2,4,5-Trichlorophenol	60	No
96-22-0	3-Pentanone	20	No
96-69-5	Bis(3-tert-butyl-4-hydroxy-6-methyl-phenyl)sulfide	60	No
98-51-1	p-tert-Butyltoluene	60	No
98-82-8	Cumene	60	No
98-83-9	alpha-Methylstyrene	10	No
98-86-2	Acetophenone	40	Yes
98-95-3	Nitrobenzene	40	No

Table 7 Estimated LAW Feed Characterization

LAW Chemical Analytes Emissions Feed Vector			
Analyte	**Kg**	**Analyte**	**Kg**
Ag	2.32E+01	Ni	2.91E+02
Al	7.02E+04	NO2	2.60E+05
As	7.09E+01	NO3	4.74E+05
B	1.70E+02	OH	2.92E+05
Ba	2.71E+01	Pb	2.76E+02
Be	3.81E+00	Pd	1.09E+01
Bi	4.86E+01	PO4	1.01E+04
Ca	5.38E+02	Pr	6.98E-02
Cd	4.12E+01	Rb	4.16E+00
Ce	6.36E+01	Rh	1.02E+01
Cl	1.48E+04	Ru	1.50E+01
CN	1.17E+01	Sb	4.20E+01
Co	2.04E+01	Se	7.19E+01
Cr	3.24E+03	Si	5.64E+02
Cu	2.30E+01	SO4	2.44E+04
F	3.18E+03	Sr	4.13E+00
Fe	5.27E+02	Ta	5.53E+00
Hg	7.62E+01	Te	1.14E-01
K	3.48E+04	Th	6.59E+01
La	1.40E+01	Ti	7.93E+00
Li	1.96E+01	Tl	5.06E+01
Mg	7.27E+01	U(total)	3.37E+02
Mn	1.78E+02	V	2.78E+01
Mo	1.68E+02	W	4.89E+01
Na	6.21E+05	Y	5.29E+00
Nd	8.32E+01	Zn	4.05E+01
NH3	3.25E+02	Zr	4.17E+01

Table 7 Estimated LAW Feed Characterization

LAW Radionuclide Emissions Feed Vector			
Analyte	**Ci**	**Analyte**	**Ci**
106Ru	8.6E+01	236U	7.76E-02
113mCd	1.33E+02	237Np	1.60E+00
125Sb	1.88E+03	238Pu	9.04E+00
126Sn	2.99E+01	238U	8.98E-01
129I	1.26E+00	239Pu	1.25E+02
134Cs	1.44E+03	240Pu	3.24E+01
137Cs	1.47E+07	241Am	2.02E-03
137mBa	4.78E+06	241Pu	6.80E+02
14C	4.13E+01	242Cm	7.69E+00
151Sm	2.64E+04	242Pu	3.43E-03
152Eu	1.52E+01	243Am	1.32E+00
154Eu	3.15E+03	243Cm	2.18E-01
155Eu	9.11E+02	244Cm	5.16E+00
226Ra	2.55E-04	3H	3.52E+02
227Ac	1.99E-02	59Ni	7.00E+01
228Ra	3.03E-01	60Co	2.71E+02
229Th	9.96E-03	63Ni	4.88E+03
231Pa	2.09E-01	79Se	3.37E+00
232Th	4.86E-02	90Sr	5.86E+05
232U	2.64E-02	90Y	2.74E+05
233U	1.62E+00	93mNb	1.20E+02
234U	1.15E+00	93Zr	1.95E+02
235U	4.53E-02	99Tc	5.20E+03

Table 8 Estimated HLW Feed Characterization

HLW Chemical Analytes Emissions Feed Vector			
Analyte	**Kg**	**Analyte**	**Kg**
Ag	2.74E+02	Ni	1.63E+03
Al	3.85E+04	NO2	1.56E+04
As	1.72E+01	NO3	1.20E+04
B	2.35E+02	OH	1.42E+05
Ba	2.51E+02	Pb	2.14E+03
Be	6.31E+00	Pd	8.77E+01
Bi	1.30E+03	PO4	9.49E+03
Ca	1.50E+03	Pr	8.65E+02
Cd	9.19E+02	Rb	3.72E+01
Ce	3.14E+02	Rh	2.80E+01
Cl	3.07E+02	Ru	1.96E+02
CN	4.98E+00	Sb	6.75E+00
Co	1.30E+01	Se	1.17E+01
Cr	7.78E+02	Si	3.00E+03
Cu	1.07E+02	SO4	3.53E+03
F	5.55E+03	Sr	1.41E+02
Fe	3.98E+04	Ta	4.35E+02
Hg	1.56E+02	Te	4.92E+01
K	7.88E+02	Th	4.77E+03
La	4.65E+02	Ti	5.66E+01
Li	3.26E+01	Tl	1.33E+03
Mg	3.08E+02	U(total)	6.99E+03
Mn	3.65E+03	V	1.12E+01
Mo	1.78E+01	W	8.52E+01
Na	6.18E+04	Y	4.74E+01
Nd	5.04E+02	Zn	1.42E+02
NH3	1.14E-01	Zr	9.71E+03

Table 8 Estimated HLW Feed Characterization

HLW Radionuclide Emissions Feed Vector			
Analyte	Ci	Analyte	Ci
106Ru	5.12E+02	236U	5.58E-01
113mCd	3.88E+02	237Np	1.20E+02
125Sb	5.19E+04	238Pu	5.68E+02
126Sn	2.43E+02	238U	9.56E+00
129I	4.71E-01	239Pu	5.03E+03
134Cs	1.23E+02	240Pu	1.33E+03
137Cs	2.43E+06	241Am	1.46E+05
137mBa	3.50E+05	241Pu	3.57E+04
14C	1.05E+01	242Cm	2.48E+01
151Sm	6.31E+05	242Pu	1.24E-01
152Eu	7.79E+02	243Am	1.18E+01
154Eu	8.44E+04	243Cm	2.05E+02
155Eu	1.25E+04	244Cm	4.66E+03
226Ra	5.16E-04	3H	1.05E+02
227Ac	2.02E+00	59Ni	3.01E+01
228Ra	1.48E+00	60Co	1.62E+04
229Th	5.53E-01	63Ni	2.81E+03
231Pa	1.70E-01	79Se	5.24E+00
232Th	3.97E+00	90Sr	1.62E+07
232U	2.26E+00	90Y	5.52E+06
233U	3.25E+02	93mNb	1.13E+02
234U	1.69E+01	93Zr	2.09E+02
235U	4.06E-01	99Tc	2.43E+04

Table 9 Summary of Assumed Stack Concentrations for PICs

CAS Registry Number	PIC Grouping or Individual Constituent	Assumed Stack Concentration [a] (ug/dscm)
Various	Volatile organic PICs (38 constituents)	2
Various	Semi-volatile PICs (72 constituents)[b]	15
Various	polycyclic aromatic PICs (8 constituents)	3
	dioxins/furans (17 constituents)	See below
1746-01-6	2,3,7,8-Tetrachlorodibenzo(p)dioxin (TCDD)	1.84E-05
19408-74-3	1,2,3,7,8,9-Hexachlorodibenzo(p)dioxin	1.56E-05
3268-87-9	Octachlorodibenzo(p)dioxin	7.82E-05
35822-46-9	1,2,3,4,6,7,8-Heptachlorodibenzo(p)dioxin	3.13E-05
39001-02-0	Octachlorodibenzofuran	2.92E-04
39227-28-6	1,2,3,4,7,8-Hexachlorodibenzo(p)dioxin	1.56E-05
40321-76-4	1,2,3,7,8-Pentachlorodibenzo(p)dioxin	1.56E-05
51207-31-9	2,3,7,8-Tetrachlorodibenzofuran	1.24E-03
55673-89-7	1,2,3,4,7,8,9-Heptachlorodibenzofuran	1.12E-04
57117-31-4	2,3,4,7,8-Pentachlorodibenzofuran	1.61E-03
57117-41-6	1,2,3,7,8-Pentachlorodibenzofuran	1.74E-03
57117-44-9	1,2,3,6,7,8-Hexachlorodibenzofuran	7.89E-04
57653-85-7	1,2,3,6,7,8-Hexachlorodibenzo(p)dioxin	1.56E-05
60851-34-5	2,3,4,6,7,8-Hexachlorodibenzofuran	4.05E-04
67562-39-4	1,2,3,4,6,7,8-Heptachlorodibenzofuran	2.31E-03
70648-26-9	1,2,3,4,7,8-Hexachlorodibenzofuran	1.61E-03
72918-21-9	1,2,3,7,8,9-Hexachlorodibenzofuran	3.55E-05

a Stack concentrations are based upon historical laboratory and pilot testing performed in support of the WTP.

b Except 4,6-Dinitro-o-cresol (534-52-1) which was detected in a VSL test (Envelope C1) at 295 µg/dscm.

Table 10 Pretreatment Process Vessel Vent Entrainment Factors

Vessel Vent Stream No.	Process Vessels	Vessel Split Liquid Fraction
FRP04	FRP-VSL-00002ABCD	4.73E-08
FEP04	FEP-VSL-00017AB	5.58E-07
FEP10	FEP-VSL-00005	7.00E-08
HLP07	HLP-VSL-00022	3.00E-07
HLP04	HLP-VSL-00027AB	2.25E-08
HLP04	HLP-VSL-00028	2.25E-08
UFP20	UFP-VSL-00001AB	4.49E-07
UFP11	UFP-VSL-00002AB	4.45E-07
UFP35	UFP-VSL-00062ABC	5.18E-07
CXP02	CXP-VSL-00001	9.00E-08
CXP02	CXP-VSL-00005	1.00E-06
CNP16	CNP-BRKPT-00002	1.00E-06
CNP16	CNP-VSL-00003	1.00E-06
CNP16	CNP-VSL-00004	3.00E-07
CRP07	CRP-VSL-00002	1.00E-06
CXP27	CXP-VSL-00026ABC	1.00E-06
RDP02	RDP-VSL-00002ABC	1.00E-06
TLP06	TLP-VSL-00009AB	1.00E-06
TLP11	TLP-VSL-00002	1.00E-06
TCP01	TCP-VSL-00001	1.00E-06
PWD03	PWD-VSL-00015	1.96E-08
PWD03	PWD-VSL-00016	1.96E-08
PWD09	PWD-VSL-00033	1.00E-06
PWD11	PWD-VSL-00043	1.65E-08
PWD07	PWD-VSL-00044	1.31E-09
RLD12	RLD-VSL-00017AB	1.00E-06
RLD02	RLD-TK-00006AB	1.00E-06

Table 11 Pretreatment Emissions Analysis Evaporators and Condensers Decontamination Factors

Inorganic Constituents[a]	FEP, CNP, TLP Evaporator		FEP, CNP, TLP Condenser	
	DF	Reference	DF	Reference
Silver	1.01E+03	1	5.31E+02	1
Aluminum	1.52E+03	1	6.50E+02	1
Arsenic	1.01E+03	1	6.50E+02	1
Boron	1.01E+03	1	5.65E+02	1
Barium	1.01E+03	1	4.96E+02	1
Bismuth	4.00E+03	1	2.79E+04	1
Calcium	1.00E+03	1	1.72E+01	1
Cadmium	2.21E+04	1	6.50E+02	1
Chloride	5.26E+02	1	7.70E+03	1
Chromium (hexavalent)	3.54E+04	1	5.32E+03	1
Copper	1.01E+03	1	5.31E+02	1
Flouride	2.43E+04	1	1.89E+03	1
Iron	1.01E+03	1	5.01E+02	1
Mercury	1.01E+03	1	6.49E+02	1
Potassium	3.54E+03	1	6.37E+02	1
Lithium	3.03E+04	1	6.26E+02	1
Magnesium	1.01E+03	1	2.86E+01	1
Manganese	1.01E+03	1	6.09E+02	1
Sodium	3.03E+04	1	6.26E+02	1
Nickel	2.95E+04	1	6.50E+02	1
Nitrite	2.43E+03	1	1.04E+04	1
Nitrate	5.77E+02	1	1.04E+04	1
Hydroxide	1.01E+03	1	6.50E+02	1
Phosphorous	1.01E+03	1	2.30E+02	1
Lead	4.00E+03	1	2.79E+04	1
Phosphate	1.01E+03	1	6.50E+02	1
Total Sulfur	1.01E+03	1	6.50E+02	1
Silicon	1.01E+03	1	2.30E+02	1
Sulfate	1.42E+03	1	4.21E+03	1
Strontium (total)	2.32E+05	1	1.17E+04	1
Zinc	1.01E+03	1	6.17E+02	1
Zirconium	1.01E+03	1	5.01E+02	1
Beryllium	1.01E+03	1	5.01E+02	1
Cyanide	1.01E+03	1	6.50E+02	1
Cobalt	1.01E+03	1	6.50E+02	1
Molybdenum	4.00E+03	1	2.79E+04	1
Rhodium	1.01E+03	1	5.01E+02	1
Antimony	4.00E+03	1	2.79E+04	1
Selenium	2.43E+04	1	1.89E+03	1
Tin	4.00E+03	1	2.79E+04	1
Tantalum	1.01E+03	1	5.01E+02	1
Thallium	2.43E+04	1	1.89E+03	1
Uranium	1.01E+03	1	6.50E+02	1
Vanadium	4.00E+03	1	2.79E+04	1
Tungsten	1.01E+03	1	5.01E+02	1
Yttrium	2.32E+05	1	1.17E+04	1
Hydrochloric Acid	1	1	1	1
Hydrofluoric Acid	1	1	1	1
Carbon monoxide	1	1	1	1
Carbon dioxide	1	1	1	1
Nitric oxide	1	1	1	1
Nitrogen dioxide	1	1	1	1
Sulfur dioxide	1	1	1	1
Ammonia/Ammonium	1.11	1	12.4	1

Table 11 Pretreatment Emissions Analysis Evaporators and Condensers Decontamination Factors

Radionuclide Constituents[b]	FEP, CNP, TLP Evaporator		FEP, CNP, TLP Condenser	
	DF	Reference	DF	Reference
Americium-241	1.41E+06	1	3.18E+03	1
Carbon-14	1.01E+03	1	6.50E+02	1
Cobalt-60	1.10E+03	1	6.50E+02	1
Curium-243	1.10E+03	1	6.50E+02	1
Curium-244	1.10E+03	1	6.50E+02	1
Cesium-137	9.36E+07	1	2.34E+04	1
Europium-152	1.41E+06	1	3.18E+03	1
Europium-154	1.41E+06	1	3.18E+03	1
Europium-155	1.41E+06	1	3.18E+03	1
Tritium	1	1	1	1
Iodine-129	4.33E+02	1	9.10E+02	1
Nickel-63	2.95E+04	1	6.50E+02	1
Neptunium-237	1.01E+03	1	6.50E+02	1
Plutonium-238	3.74E+06	1	3.12E+03	1
Plutonium-239	3.74E+06	1	3.12E+03	1
Plutonium-240	3.74E+06	1	3.12E+03	1
Plutonium-241	3.74E+06	1	3.12E+03	1
Antimony-125	4.00E+03	1	2.79E+04	1
Samarium-151	3.74E+06	1	3.12E+03	1
Tin-126	4.00E+03	1	2.79E+04	1
Strontium-90	2.32E+05	1	1.17E+04	1
Technetium-99	1.01E+03	1	6.50E+02	1
Thorium-232	1.01E+03	1	6.49E+02	1
Uranium-233	1.01E+03	1	6.49E+02	1
Uranium-234	1.01E+03	1	6.50E+02	1
Uranium-235	1.01E+03	1	6.50E+02	1
Uranium-236	1.01E+03	1	6.49E+02	1
Uranium-238	1.01E+03	1	6.49E+02	1
Yttrium-90	2.32E+05	1	1.17E+04	1
Ruthenium-106	2.43E+04	1	1.89E+03	1
Cesium-134	9.36E+07	1	2.34E+04	1
Barium-137m	9.36E+07	1	2.34E+04	1
Plutonium-242	3.74E+06	1	3.12E+03	1
Radium-226	1.01E+03	1	5.01E+02	1
Uranium-232	1.01E+03	1	6.49E+02	1
Protactinium-231	1.01E+03	1	5.01E+02	1
Nickel-59	2.95E+04	1	6.50E+02	1
Actinium-227	1.01E+03	1	5.01E+02	1
Americium-243	1.41E+06	1	3.18E+03	1
Radium-228	1.01E+03	1	5.01E+02	1
Curium-242	1.10E+03	1	6.50E+02	1
Thorium-229	1.01E+03	1	6.49E+02	1
Zirconium-93	1.01E+03	1	5.01E+02	1
Niobium-93m	1.01E+03	1	5.01E+02	1
Cadmium-113m	2.21E+04	1	6.50E+02	1
Selenium-79	2.43E+04	1	1.89E+03	1

Notes:

a Mercury in the pretreatment offgas is assumed to be in the vapor phase.

b ^{3}H and ^{14}C are assumed to have the same DF as water and CO_2, respectively; therefore, a DF of 1 has been specified for these constituents.

Reference:

1 Tables 2.2-1 and 2.2-2 from the *Flowsheet Bases, Assumptions, and Requirements*, 24590-WTP-RPT-PT-02-005.

Table 12 Pretreatment Emissions Analysis Equipment Decontamination Factors

Inorganic Constituents[a]	PVPCaustic Scrubber		PVP HEME		PVV and PJV Primary HEPA		PVV and PJV Secondary HEPA		PVP Thermal Oxidizer		PVP Carbon Bed Adsorber		PJV Demister	
	DF	Reference	DF	Reference	DF	Reference	DF	Reference	DF	Reference	DF	Reference	DF	Reference
Silver	3.5	E	200	A	2,000	C	100	C	1	N/A	1	N/A	5	D
Aluminum	3.5	E	200	A	2,000	C	100	C	1	N/A	1	N/A	5	D
Arsenic	3.5	E	200	A	2,000	C	100	C	1	N/A	1	N/A	5	D
Boron	3.5	E	200	A	2,000	C	100	C	1	N/A	1	N/A	5	D
Barium	3.5	E	200	A	2,000	C	100	C	1	N/A	1	N/A	5	D
Bismuth	3.5	E	200	A	2,000	C	100	C	1	N/A	1	N/A	5	D
Calcium	3.5	E	200	A	2,000	C	100	C	1	N/A	1	N/A	5	D
Cadmium	3.5	E	200	A	2,000	C	100	C	1	N/A	1	N/A	5	D
Chloride	3.5	E	200	A	2,000	C	100	C	1	N/A	1	N/A	5	D
Chromium (hexavalent)	3.5	E	200	A	2,000	C	100	C	1	N/A	1	N/A	5	D
Copper	3.5	E	200	A	2,000	C	100	C	1	N/A	1	N/A	5	D
Flouride	3.5	E	200	A	2,000	C	100	C	1	N/A	1	N/A	5	D
Iron	3.5	E	200	A	2,000	C	100	C	1	N/A	1	N/A	5	D
Mercury	1	N/A	1	N/A	1	N/A	1	N/A	1	N/A	1	N/A	1	N/A
Potassium	3.5	E	200	A	2,000	C	100	C	1	N/A	1	N/A	5	D
Lithium	3.5	E	200	A	2,000	C	100	C	1	N/A	1	N/A	5	D
Magnesium	3.5	E	200	A	2,000	C	100	C	1	N/A	1	N/A	5	D
Manganese	3.5	E	200	A	2,000	C	100	C	1	N/A	1	N/A	5	D
Sodium	3.5	E	200	A	2,000	C	100	C	1	N/A	1	N/A	5	D
Nickel	3.5	E	200	A	2,000	C	100	C	1	N/A	1	N/A	5	D
Nitrite	3.5	E	200	A	2,000	C	100	C	1	N/A	1	N/A	5	D
Nitrate	3.5	E	200	A	2,000	C	100	C	1	N/A	1	N/A	5	D
Hydroxide	3.5	E	200	A	2,000	C	100	C	1	N/A	1	N/A	5	D
Phosphorous	3.5	E	200	A	2,000	C	100	C	1	N/A	1	N/A	5	D
Lead	3.5	E	200	A	2,000	C	100	C	1	N/A	1	N/A	5	D
Phosphate	3.5	E	200	A	2,000	C	100	C	1	N/A	1	N/A	5	D
Total Sulfur	3.5	E	200	A	2,000	C	100	C	1	N/A	1	N/A	5	D
Silicon	3.5	E	200	A	2,000	C	100	C	1	N/A	1	N/A	5	D
Sulfate	3.5	E	200	A	2,000	C	100	C	1	N/A	1	N/A	5	D
Strontium (total)	3.5	E	200	A	2,000	C	100	C	1	N/A	1	N/A	5	D
Zinc	3.5	E	200	A	2,000	C	100	C	1	N/A	1	N/A	5	D
Zirconium	3.5	E	200	A	2,000	C	100	C	1	N/A	1	N/A	5	D
Beryllium	3.5	E	200	A	2,000	C	100	C	1	N/A	1	N/A	5	D
Cyanide	3.5	E	200	A	2,000	C	100	C	1	N/A	1	N/A	5	D
Cobalt	3.5	E	200	A	2,000	C	100	C	1	N/A	1	N/A	5	D
Molybdenum	3.5	E	200	A	2,000	C	100	C	1	N/A	1	N/A	5	D
Rhodium	3.5	E	200	A	2,000	C	100	C	1	N/A	1	N/A	5	D
Antimony	3.5	E	200	A	2,000	C	100	C	1	N/A	1	N/A	5	D
Selenium	3.5	E	200	A	2,000	C	100	C	1	N/A	1	N/A	5	D
Tin	3.5	E	200	A	2,000	C	100	C	1	N/A	1	N/A	5	D
Tantalum	3.5	E	200	A	2,000	C	100	C	1	N/A	1	N/A	5	D
Thallium	3.5	E	200	A	2,000	C	100	C	1	N/A	1	N/A	5	D
Uranium	3.5	E	200	A	2,000	C	100	C	1	N/A	1	N/A	5	D
Vanadium	3.5	E	200	A	2,000	C	100	C	1	N/A	1	N/A	5	D
Tungsten	3.5	E	200	A	2,000	C	100	C	1	N/A	1	N/A	5	D
Yttrium	3.5	E	200	A	2,000	C	100	C	1	N/A	1	N/A	5	D
Hydrochloric Acid	3	B	1	N/A	1	N/A	1	N/A	1	N/A	1	N/A	1	N/A
Hydrofluoric Acid	3	B	1	N/A	1	N/A	1	N/A	1	N/A	1	N/A	1	N/A
Carbon monoxide	1	N/A	1	N/A	1	N/A	1	N/A	1	N/A	1	N/A	1	N/A
Carbon dioxide	1	N/A	1	N/A	1	N/A	1	N/A	1	N/A	1	N/A	1	N/A
Nitric oxide	1.8	E	1	N/A	1	N/A	1	N/A	1	N/A	1	N/A	1	N/A
Nitrogen dioxide	1.8	E	1	N/A	1	N/A	1	N/A	1	N/A	1	N/A	1	N/A
Sulfur dioxide	3	B	1	N/A	1	N/A	1	N/A	1	N/A	1	N/A	1	N/A
Ammonia/Ammonium	3	B	1	N/A	1	N/A	1	N/A	1	N/A	1	N/A	1	N/A

Table 12 Pretreatment Emissions Analysis Equipment Decontamination Factors

Radionuclide Constituents[b]	PVP Caustic Scrubber		PVP HEME		PVV and PJV Primary HEPA		PVV and PJV Secondary HEPA		PVP Thermal Oxidizer		PVP Carbon Bed Adsorber		PJV Demister	
	DF	Reference	DF	Reference	DF	Reference	DF	Reference	DF	Reference	DF	Reference	DF	Reference
Americium-241	3.5	E	200	A	2,000	C	100	C	1	N/A	1	N/A	5	D
Carbon-14	1	N/A	1	N/A	1	N/A	1	N/A	1	N/A	1	N/A	1	N/A
Cobalt-60	3.5	E	200	A	2,000	C	100	C	1	N/A	1	N/A	5	D
Curium-243	3.5	E	200	A	2,000	C	100	C	1	N/A	1	N/A	5	D
Curium-244	3.5	E	200	A	2,000	C	100	C	1	N/A	1	N/A	5	D
Cesium-137	3.5	E	200	A	2,000	C	100	C	1	N/A	1	N/A	5	D
Europium-152	3.5	E	200	A	2,000	C	100	C	1	N/A	1	N/A	5	D
Europium-154	3.5	E	200	A	2,000	C	100	C	1	N/A	1	N/A	5	D
Europium-155	3.5	E	200	A	2,000	C	100	C	1	N/A	1	N/A	5	D
Tritium	1	N/A	1	N/A	1	N/A	1	N/A	1	N/A	1	N/A	1	N/A
Iodine-129	3.5	E	1	N/A	1	N/A	1	N/A	1	N/A	1	N/A	1	N/A
Nickel-63	3.5	E	200	A	2,000	C	100	C	1	N/A	1	N/A	5	D
Neptunium-237	3.5	E	200	A	2,000	C	100	C	1	N/A	1	N/A	5	D
Plutonium-238	3.5	E	200	A	2,000	C	100	C	1	N/A	1	N/A	5	D
Plutonium-239	3.5	E	200	A	2,000	C	100	C	1	N/A	1	N/A	5	D
Plutonium-240	3.5	E	200	A	2,000	C	100	C	1	N/A	1	N/A	5	D
Plutonium-241	3.5	E	200	A	2,000	C	100	C	1	N/A	1	N/A	5	D
Antimony-125	3.5	E	200	A	2,000	C	100	C	1	N/A	1	N/A	5	D
Samarium-151	3.5	E	200	A	2,000	C	100	C	1	N/A	1	N/A	5	D
Tin-126	3.5	E	200	A	2,000	C	100	C	1	N/A	1	N/A	5	D
Strontium-90	3.5	E	200	A	2,000	C	100	C	1	N/A	1	N/A	5	D
Technetium-99	3.5	E	200	A	2,000	C	100	C	1	N/A	1	N/A	5	D
Thorium-232	3.5	E	200	A	2,000	C	100	C	1	N/A	1	N/A	5	D
Uranium-233	3.5	E	200	A	2,000	C	100	C	1	N/A	1	N/A	5	D
Uranium-234	3.5	E	200	A	2,000	C	100	C	1	N/A	1	N/A	5	D
Uranium-235	3.5	E	200	A	2,000	C	100	C	1	N/A	1	N/A	5	D
Uranium-236	3.5	E	200	A	2,000	C	100	C	1	N/A	1	N/A	5	D
Uranium-238	3.5	E	200	A	2,000	C	100	C	1	N/A	1	N/A	5	D
Yttrium-90	3.5	E	200	A	2,000	C	100	C	1	N/A	1	N/A	5	D
Ruthenium-106	3.5	E	200	A	2,000	C	100	C	1	N/A	1	N/A	5	D
Cesium-134	3.5	E	200	A	2,000	C	100	C	1	N/A	1	N/A	5	D
Barium-137m	3.5	E	200	A	2,000	C	100	C	1	N/A	1	N/A	5	D
Plutonium-242	3.5	E	200	A	2,000	C	100	C	1	N/A	1	N/A	5	D
Radium-226	3.5	E	200	A	2,000	C	100	C	1	N/A	1	N/A	5	D
Uranium-232	3.5	E	200	A	2,000	C	100	C	1	N/A	1	N/A	5	D
Protactinium-231	3.5	E	200	A	2,000	C	100	C	1	N/A	1	N/A	5	D
Nickel-59	3.5	E	200	A	2,000	C	100	C	1	N/A	1	N/A	5	D
Actinium-227	3.5	E	200	A	2,000	C	100	C	1	N/A	1	N/A	5	D
Americium-243	3.5	E	200	A	2,000	C	100	C	1	N/A	1	N/A	5	D
Radium-228	3.5	E	200	A	2,000	C	100	C	1	N/A	1	N/A	5	D
Curium-242	3.5	E	200	A	2,000	C	100	C	1	N/A	1	N/A	5	D
Thorium-229	3.5	E	200	A	2,000	C	100	C	1	N/A	1	N/A	5	D
Zirconium-93	3.5	E	200	A	2,000	C	100	C	1	N/A	1	N/A	5	D
Niobium-93m	3.5	E	200	A	2,000	C	100	C	1	N/A	1	N/A	5	D
Cadmium-113m	3.5	E	200	A	2,000	C	100	C	1	N/A	1	N/A	5	D
Selenium-79	3.5	E	200	A	2,000	C	100	C	1	N/A	1	N/A	5	D

Notes:

a Mercury in the pretreatment offgas is assumed to be in the vapor phase.

b ^{3}H and ^{14}C are assumed to have the same DF as water and CO_2, respectively; therefore, a DF of 1 has been specified for these constituents.

Reference:

A 24590-PTF-3YD-PVP-00001, *System Description for Pretreatment Vessel Vent Process System, PVP*, section 6.2.4 for HEME.

B Assumption.

C Based on the *Best Available Radionuclide Control Technology Analysis for the WTP*, 24590-WTP-RPT-ENV-01-004

D 24590-PTF-3YD-PJV-00001, *System Description for PTF Pulse Jet Ventilation System (PJV)*, section 7.2.

E From 24590-PTF-MKD-PVP-00002, *Mechanical Data Sheet, PTF Vessel Vent Caustic Scrubber.*

N/A No removal is expected for this constituent.

Table 13 Summary of Pretreatment Offgas Treatment Equipment DFs for Organic COPCs

CAS Registry Number	Compound	Phase f	PT Caustic Scrubber a	PT HEME b	All HEPAs (First) c	All HEPAs (Second) c	PT Thermal Oxidizer d	PT Carbon Bed Adsorber d	PT PJM/RFD Demister e
100-00-5	p-Nitrochlorobenzene	Vapor	1	1	1	1	10,000	5	1
100-21-0	p-Phthalic acid	Vapor	1	1	1	1	20	50	1
100-41-4	Ethyl benzene	Vapor	1	1	1	1	10,000	1	1
100-42-5	Styrene	Vapor	1	1	1	1	10,000	1	1
10061-01-5	cis-1,3-Dichloropropene	Vapor	1	1	1	1	100	1	1
10061-02-6	trans-1,3-Dichloropropene	Vapor	1	1	1	1	50	1	1
101-55-3	4-Bromophenylphenyl ether	Vapor	1	1	1	1	3.33333333	50	1
101-84-8	Diphenyl ether	Vapor	1	1	1	1	50	5	1
106-35-4	3-Heptanone	Vapor	1	1	1	1	10,000	1	1
106-42-3	p-Xylene (Dimethyl benzene)	Vapor	1	1	1	1	1,000	1	1
106-46-7	1,4-Dichlorobenzene	Vapor	1	1	1	1	50	2	1
106-88-7	1,2-Epoxybutane	Vapor	1	1	1	1	10,000	1	1
106-93-4	Ethylene dibromide (Dibromethane)	Vapor	1	1	1	1	1	10	1
106-97-8	Butane	Vapor	1	1	1	1	10,000	1	1
106-99-0	1,3-Butadiene	Vapor	1	1	1	1	10,000	1	1
107-02-8	Acrolein	Vapor	1	1	1	1	10,000	1	1
107-05-1	3-Chloropropene (Allyl chloride)	Vapor	1	1	1	1	10,000	1	1
107-06-2	1,2-Dichloroethane (Ethylene chloride)	Vapor	1	1	1	1	10,000	1	1
107-12-0	Propionitrile	Vapor	1	1	1	1	1,000	1	1
107-13-1	Acrylonitrile	Vapor	1	1	1	1	10,000	1	1
107-18-6	2-Propene-1-ol	Vapor	1	1	1	1	10,000	1	1
107-31-3	Formic acid, methyl ester	Vapor	1	1	1	1	10,000	1	1
107-66-4	Dibutylphosphate	Particle-bound	1/3.5	1/200	1/2000	1/100	1,000	1	1/5
107-87-9	2-Pentanone	Vapor	1	1	1	1	10,000	1	1
108-03-2	1-Nitropropane	Vapor	1	1	1	1	10,000	1	1
108-05-4	Vinyl acetate	Vapor	1	1	1	1	10,000	1	1
108-10-1	Hexone (4-Methyl-2-pentanone or MIBK)	Vapor	1	1	1	1	10,000	1	1
108-20-3	Bis(isopropyl)ether	Vapor	1	1	1	1	10,000	1	1
108-38-3	m-Xylene (Dimethyl benzene)	Vapor	1	1	1	1	1,000	1	1
108-39-4	m-Cresol	Vapor	1	1	1	1	1,000	2	1
108-87-2	Methylcyclohexane	Vapor	1	1	1	1	10,000	1	1
108-88-3	Toluene	Vapor	1	1	1	1	10,000	1	1
108-90-7	Chlorobenzene	Vapor	1	1	1	1	20	5	1
108-93-0	Cyclohexanol	Vapor	1	1	1	1	10,000	2	1
108-94-1	Cyclohexanone	Vapor	1	1	1	1	10,000	2	1
108-95-2	Phenol	Vapor	1	1	1	1	10	20	1

Table 13 Summary of Pretreatment Offgas Treatment Equipment DFs for Organic COPCs

CAS Registry Number	Compound	Phase f	PT Caustic Scrubber a	PT HEME b	All HEPAs (First) c	All HEPAs (Second) c	PT Thermal Oxidizer d	PT Carbon Bed Adsorber d	PT PJM/RFD Demister e
109-66-0	n-Pentane	Vapor	1	1	1	1	10,000	1	1
109-99-9	Tetrahydrofuran	Vapor	1	1	1	1	10,000	1	1
110-12-3	5-Methyl-2-hexanone	Vapor	1	1	1	1	10,000	1	1
110-43-0	2-Heptanone	Vapor	1	1	1	1	10,000	1	1
110-54-3	n-Hexane	Vapor	1	1	1	1	10,000	1	1
110-62-3	n-Valeraldehyde	Vapor	1	1	1	1	10,000	1	1
110-82-7	Cyclohexane	Vapor	1	1	1	1	10,000	1	1
110-83-8	Cyclohexene	Vapor	1	1	1	1	10,000	1	1
110-86-1	Pyridine	Vapor	1	1	1	1	10,000	1	1
111-65-9	n-Octane	Vapor	1	1	1	1	10,000	1	1
111-76-2	Ethylene glycol monobutyl ether	Vapor	1	1	1	1	10,000	2	1
111-84-2	n-Nonane	Vapor	1	1	1	1	10,000	2	1
117-81-7	Bis(2-ethylhexyl)phthalate (DEHP)	Particle-bound	1/3.5	1/200	1/2000	1/100	10,000	5	1/5
117-84-0	n-Dioctyl phthalate	Particle-bound	1/3.5	1/200	1/2000	1/100	10,000	5	1/5
120-12-7	Anthracene	Particle-bound	1/3.5	1/200	1/2000	1/100	1,000	5	1/5
120-82-1	1,2,4-Trichlorobenzene	Vapor	1	1	1	1	100	5	1
120-83-2	2,4-Dichlorophenol	Vapor	1	1	1	1	3.33333333	50	1
121-44-8	Triethylamine	Vapor	1	1	1	1	10,000	1	1
121-69-7	Dimethylaniline	Vapor	1	1	1	1	10,000	2	1
122-39-4	N,N-Diphenylamine	Vapor	1	1	1	1	50	5	1
123-19-3	4-Heptanone	Vapor	1	1	1	1	10,000	1	1
123-38-6	n-Propionaldehyde	Vapor	1	1	1	1	10,000	1	1
123-51-3	3-Methyl-1-butanol	Vapor	1	1	1	1	10,000	1	1
123-86-4	Acetic acid n-butyl ester	Vapor	1	1	1	1	10,000	1	1
123-91-1	1,4-Dioxane	Vapor	1	1	1	1	10,000	1	1
126-73-8	Tributyl phosphate	Particle-bound	1/3.5	1/200	1/2000	1/100	10,000	5	1/5
126-98-7	2-Methyl-2-propenenitrile (Methacrylonitrile)	Vapor	1	1	1	1	10,000	1	1
127-18-4	Perchloroethylene (tetrachloroethylene)	Vapor	1	1	1	1	1	10	1
127-19-5	N,N-Dimethylacetamide	Vapor	1	1	1	1	10,000	2	1
128-37-0	2,6-Bis(tert-butyl)-4-methylphenol	Vapor	1	1	1	1	10,000	5	1
129-00-0	Pyrene	Particle-bound	1/3.5	1/200	1/2000	1/100	3.33333333	50	1/5
1321-64-8	Pentachloronaphthalene	Particle-bound	1/3.5	1/200	1/2000	1/100	3.33333333	50	1/5
1321-65-9	Trichloronaphthalene	Particle-bound	1/3.5	1/200	1/2000	1/100	3.33333333	50	1/5
132-64-9	Dibenzofuran	Particle-bound	1/3.5	1/200	1/2000	1/100	3.33333333	50	1/5
1335-87-1	Hexachloronaphthalene	Particle-bound	1/3.5	1/200	1/2000	1/100	3.33333333	50	1/5
1335-88-2	Tetrachloronaphthalene	Particle-bound	1/3.5	1/200	1/2000	1/100	3.33333333	50	1/5

Table 13 Summary of Pretreatment Offgas Treatment Equipment DFs for Organic COPCs

CAS Registry Number	Compound	Phase f	PT Caustic Scrubber a	PT HEME b	All HEPAs (First) c	All HEPAs (Second) c	PT Thermal Oxidizer d	PT Carbon Bed Adsorber d	PT PJM/RFD Demister e
1336-36-3	Polychlorinated biphenyls (PCBs)	Vapor	1	1	1	1	3.33333333	50	1
141-78-6	Acetic acid ethyl ester (Ethyl acetate)	Vapor	1	1	1	1	10,000	1	1
141-79-7	4-Methyl-3-penten-2-one	Vapor	1	1	1	1	10,000	1	1
142-82-5	n-Heptane	Vapor	1	1	1	1	10,000	1	1
144-62-7	Oxalic acid	Vapor	1	1	1	1	10	20	1
156-60-5	trans-1,2-Dichloroethylene	Vapor	1	1	1	1	10,000	1	1
1634-04-4	Methyl tert-butyl ether	Vapor	1	1	1	1	10,000	1	1
189-55-9	Dibenzo[a,i]pyrene	Particle	3.5	200	2000	100	3.33333333	50	5
189-64-0	Dibenzo[a,h]pyrene	Particle	3.5	200	2000	100	3.33333333	50	5
191-24-2	Benzo(g,h,i)perylene	Particle-bound	1/3.5	1/200	1/2000	1/100	3.33333333	50	1/5
191-30-0	Benzo[a,i]pyrene	Particle	3.5	200	2000	100	3.33333333	50	5
192-65-4	Dibenzo[a,e]pyrene	Particle	3.5	200	2000	100	3.33333333	50	5
193-39-5	Indeno(1,2,3-cd)pyrene	Particle	3.5	200	2000	100	3.33333333	50	5
206-44-0	Fluoranthene	Particle-bound	1/3.5	1/200	1/2000	1/100	3.33333333	50	1/5
208-96-8	Acenaphthylene	Vapor	1	1	1	1	3.33333333	50	1
2234-13-1	Octachloronaphthalene	Particle-bound	1/3.5	1/200	1/2000	1/100	3.33333333	50	1/5
224-42-0	Dibenz[a,j]acridine	Particle-bound	1/3.5	1/200	1/2000	1/100	3.33333333	50	1/5
226-36-8	Dibenz[a,h]acridine	Particle-bound	1/3.5	1/200	1/2000	1/100	3.33333333	50	1/5
25551-13-7	Trimethyl benzene	Vapor	1	1	1	1	1,000	2	1
26140-60-3	Terphenyls	Particle-bound	1/3.5	1/200	1/2000	1/100	3.33333333	50	1/5
27154-33-2	Trichlorofluoroethane	Vapor	1	1	1	1	1	10	1
287-92-3	Cyclopentane	Vapor	1	1	1	1	10,000	1	1
3697-24-3	5-Methylchrysene	Particle-bound	1/3.5	1/200	1/2000	1/100	3.33333333	50	1/5
3825-26-1	Ammonium perfluorooctanoate	Vapor	1	1	1	1	3.33333333	50	1
4170-30-3	2-Butenaldehyde (2-Butenal)	Vapor	1	1	1	1	10,000	1	1
50-00-0	Formaldehyde	Vapor	1	1	1	1	10,000	1	1
50-32-8	Benzo(a)pyrene	Particle-bound	1/3.5	1/200	1/2000	1/100	3.33333333	50	1/5
53-70-3	Dibenzo(a,h)anthracene	Particle-bound	1/3.5	1/200	1/2000	1/100	3.33333333	50	1/5
540-59-0	1,2-Dichloroethylene	Vapor	1	1	1	1	10,000	1	1
540-84-1	2,2,4-Trimethylpentane	Vapor	1	1	1	1	10,000	1	1
541-73-1	1,3-Dichlorobenzene	Vapor	1	1	1	1	50	2	1
56-23-5	Carbon tetrachloride	Vapor	1	1	1	1	1	5	1
563-80-4	3-Methyl-2-butanone	Vapor	1	1	1	1	10,000	1	1
56-49-5	3-Methylcholanthrene	Particle-bound	1/3.5	1/200	1/2000	1/100	3.33333333	50	1/5
57-14-7	1,1-Dimethylhydrazine	Vapor	1	1	1	1	10,000	1	1
58-90-2	2,3,4,6-Tetrachlorophenol	Vapor	1	1	1	1	3.33333333	10	1

Table 13 Summary of Pretreatment Offgas Treatment Equipment DFs for Organic COPCs

CAS Registry Number	Compound	Phase f	PT Caustic Scrubber a	PT HEME b	All HEPAs (First) c	All HEPAs (Second) c	PT Thermal Oxidizer d	PT Carbon Bed Adsorber d	PT PJM/RFD Demister e
591-78-6	2-Hexanone	Vapor	1	1	1	1	1,000	1	1
59-50-7	4-Chloro-3-methylphenol	Vapor	1	1	1	1	3.33333333	20	1
59-89-2	N-Nitrosomorpholine	Vapor	1	1	1	1	10,000	2	1
602-87-9	5-Nitroacenaphthene	Particle-bound	1/3.5	1/200	1/2000	1/100	3.33333333	50	1/5
60-29-7	Ethyl ether	Vapor	1	1	1	1	10,000	1	1
603-34-9	Triphenylamine	Vapor	1	1	1	1	3.33333333	50	1
60-34-4	Methylhydrazine	Vapor	1	1	1	1	10,000	1	1
60-35-5	Acetamide	Vapor	1	1	1	1	10,000	2	1
621-64-7	Di-n-Propylnitrosamine	Vapor	1	1	1	1	10,000	2	1
624-83-9	Methyl isocyanate	Vapor	1	1	1	1	1,000	1	1
627-13-4	Nitric acid, propyl ester	Vapor	1	1	1	1	10,000	1	1
62-75-9	N-Nitroso-N,N-dimethylamine	Vapor	1	1	1	1	10,000	2	1
630-20-6	1,1,1,2-Tetrachloroethane	Vapor	1	1	1	1	1	10	1
64-17-5	Ethyl alcohol	Vapor	1	1	1	1	10,000	1	1
64-18-6	Formic acid	Vapor	1	1	1	1	10,000	1	1
64-19-7	Acetic acid	Vapor	1	1	1	1	10,000	1	1
67-56-1	Methyl alcohol (Methanol)	Vapor	1	1	1	1	10,000	1	1
67-63-0	2-Propyl alcohol (Isopropanol)	Vapor	1	1	1	1	10,000	1	1
67-64-1	2-Propanone (Acetone)	Vapor	1	1	1	1	10,000	1	1
67-66-3	Chloroform	Vapor	1	1	1	1	1	2	1
67-72-1	Hexachloroethane	Vapor	1	1	1	1	1	50	1
684-16-2	Hexafluoroacetone	Vapor	1	1	1	1	1	1	1
71-23-8	n-Propyl alcohol	Vapor	1	1	1	1	10,000	1	1
71-36-3	n-Butyl alcohol	Vapor	1	1	1	1	10,000	1	1
71-43-2	Benzene	Vapor	1	1	1	1	100	1	1
71-55-6	Methyl chloroform (1,1,1-Trichloroethane)	Vapor	1	1	1	1	1,000	1	1
74-83-9	Bromomethane (Methyl bromide)	Vapor	1	1	1	1	1,000	1	1
74-87-3	Chloromethane (Methyl chloride)	Vapor	1	1	1	1	20	1	1
74-97-5	Bromochloromethane	Vapor	1	1	1	1	1	2	1
74-99-7	Methylacetylene	Vapor	1	1	1	1	10,000	1	1
75-00-3	Chloroethane	Vapor	1	1	1	1	1,000	1	1
75-01-4	Vinyl chloride (1-Chloroethene)	Vapor	1	1	1	1	10,000	1	1
75-05-8	Acetonitrile	Vapor	1	1	1	1	1,000	1	1
75-07-0	Acetaldehyde	Vapor	1	1	1	1	10,000	1	1
75-09-2	Dichloromethane (Methylene chloride)	Vapor	1	1	1	1	50	1	1
75-12-7	Formamide	Vapor	1	1	1	1	10,000	1	1

Table 13 Summary of Pretreatment Offgas Treatment Equipment DFs for Organic COPCs

CAS Registry Number	Compound	Phase f	PT Caustic Scrubber a	PT HEME b	All HEPAs (First) c	All HEPAs (Second) c	PT Thermal Oxidizer d	PT Carbon Bed Adsorber d	PT PJM/RFD Demister e
75-15-0	Carbon disulfide	Vapor	1	1	1	1	10,000	1	1
75-21-8	Ethylene oxide (Oxirane)	Vapor	1	1	1	1	10,000	1	1
75-27-4	Bromodichloromethane	Vapor	1	1	1	1	1	5	1
75-34-3	1,1-Dichloroethane	Vapor	1	1	1	1	10,000	1	1
75-35-4	1,1-Dichloroethene (Vinylidene chloride)	Vapor	1	1	1	1	10,000	1	1
75-43-4	Dichlorofluoromethane	Vapor	1	1	1	1	1,000	1	1
75-45-6	Chlorodifluoromethane	Vapor	1	1	1	1	50	1	1
75-50-3	Trimethylamine	Vapor	1	1	1	1	10,000	1	1
75-52-5	Nitromethane	Vapor	1	1	1	1	10,000	1	1
75-55-8	2-Methylaziridine	Vapor	1	1	1	1	10,000	1	1
75-61-6	Difluorodibromomethane	Vapor	1	1	1	1	1	1	1
75-63-8	Trifluorobromomethane	Vapor	1	1	1	1	1	1	1
75-65-0	2-Methyl-2-propanol	Vapor	1	1	1	1	10,000	1	1
75-69-4	Trichlorofluoromethane	Vapor	1	1	1	1	1	1	1
75-71-8	Dichlorodifluoromethane	Vapor	1	1	1	1	1	1	1
76-03-9	Trichloroacetic acid	Vapor	1	1	1	1	1	50	1
76-11-9	1,1,1,2-Tetrachloro-2,2-difluoroethane	Vapor	1	1	1	1	20	5	1
76-12-0	1,1,2,2-Tetrachloro-1,2-difluoroethane	Vapor	1	1	1	1	20	5	1
76-13-1	1,2,2-Trichloro-1,1,2-trifluoroethane (Freon 113)	Vapor	1	1	1	1	20	2	1
76-14-2	1,2-Dichloro-1,1,2,2-tetrafluoroethane	Vapor	1	1	1	1	1	1	1
76-15-3	Chloropentafluoroethane	Vapor	1	1	1	1	1	1	1
78-83-1	2-Methylpropyl alcohol (Isobutyl alcohol)	Vapor	1	1	1	1	10,000	1	1
78-87-5	1,2-Dichloropropane	Vapor	1	1	1	1	1,000	1	1
78-92-2	1-Methylpropyl alcohol (2-Butanol)	Vapor	1	1	1	1	10,000	1	1
78-93-3	Methyl ethyl ketone (MEK, 2-Butanone)	Vapor	1	1	1	1	1,000	1	1
79-00-5	1,1,2-Trichloroethane	Vapor	1	1	1	1	10,000	1	1
79-01-6	Trichloroethylene	Vapor	1	1	1	1	10,000	1	1
79-09-4	Propionic acid	Vapor	1	1	1	1	10,000	1	1
79-10-7	2-Propenoic acid	Vapor	1	1	1	1	10,000	1	1
79-20-9	Methyl acetate	Vapor	1	1	1	1	10,000	1	1
79-34-5	1,1,2,2-Tetrachloroethane	Vapor	1	1	1	1	1	10	1
83-32-9	Acenaphthene	Vapor	1	1	1	1	3.33333333	50	1
84-66-2	Diethyl phthalate	Vapor	1	1	1	1	10,000	5	1
84-74-2	Dibutyl phthalate	Particle-bound	1/3.5	1/200	1/2000	1/100	10,000	5	1/5
85-01-8	Phenanthrene	Particle-bound	1/3.5	1/200	1/2000	1/100	3.33333333	50	1/5
85-68-7	Butylbenzyl phthalate	Particle-bound	1/3.5	1/200	1/2000	1/100	10,000	5	1/5

Table 13 Summary of Pretreatment Offgas Treatment Equipment DFs for Organic COPCs

CAS Registry Number	Compound	Phase f	PT Caustic Scrubber a	PT HEME b	All HEPAs (First) c	All HEPAs (Second) c	PT Thermal Oxidizer d	PT Carbon Bed Adsorber d	PT PJM/RFD Demister e
86-73-7	Fluorene	Vapor	1	1	1	1	3.33333333	50	1
87-68-3	Hexachlorobutadiene	Vapor	1	1	1	1	50	5	1
88-06-2	2,4,6-Trichlorophenol	Vapor	1	1	1	1	3.33333333	50	1
88-72-2	2-Nitrotoluene	Vapor	1	1	1	1	10,000	2	1
88-75-5	2-Nitrophenol	Vapor	1	1	1	1	3.33333333	20	1
88-89-1	Picric acid	Particle-bound	1/3.5	1/200	1/2000	1/100	10,000	5	1/5
91-20-3	Naphthalene	Vapor	1	1	1	1	1,000	2	1
91-22-5	Quinoline	Vapor	1	1	1	1	10,000	2	1
91-58-7	2-Chloronapthalene	Vapor	1	1	1	1	3.33333333	50	1
92-52-4	1,1`-Biphenyl	Vapor	1	1	1	1	1,000	5	1
92-93-3	4-Nitrobiphenyl	Particle-bound	1/3.5	1/200	1/2000	1/100	3.33333333	50	1/5
95-13-6	Indene	Vapor	1	1	1	1	1,000	2	1
95-47-6	o-Xylene	Vapor	1	1	1	1	10,000	1	1
95-48-7	o-Cresol (2-Methylphenol)	Vapor	1	1	1	1	1,000	2	1
95-49-8	2-Chlorotoluene	Vapor	1	1	1	1	10,000	2	1
95-50-1	o-Dichlorobenzene (1,2-Dichlorobenzene)	Vapor	1	1	1	1	50	2	1
95-57-8	2-Chlorophenol	Vapor	1	1	1	1	10,000	2	1
95-95-4	2,4,5-Trichlorophenol	Vapor	1	1	1	1	3.33333333	50	1
96-22-0	3-Pentanone	Vapor	1	1	1	1	10,000	1	1
96-69-5	Bis(3-tert-butyl-4-hydroxy-6-methyl-phenyl)sulfide	Vapor	1	1	1	1	3.33333333	50	1
98-51-1	p-tert-Butyltoluene	Vapor	1	1	1	1	10,000	2	1
98-82-8	Cumene	Vapor	1	1	1	1	10,000	2	1
98-83-9	alpha-Methylstyrene	Vapor	1	1	1	1	100	2	1
98-86-2	Acetophenone	Vapor	1	1	1	1	100	2	1
98-95-3	Nitrobenzene	Vapor	1	1	1	1	10,000	2	1

a From 24590-PTF-MKD-PVP-00002, *Mechanical Data Sheet, PTF Vessel Vent Caustic Scrubber.*
b Based on 24590-PTF-3YD-PVP-00001, *System Description for Pretreatment Vessel Vent Process System*, PVP, Section 6.2.4.
c Based on the *Best Available Radionuclide Control Technology Analysis for the WTP*, 24590-WTP-RPT-ENV-01-004, Rev 1.
d Based on results presented in Appendix H.
e From 24590-PTF-3YD-PJV-00001, *System Description for PTF Pulse Jet Ventilation System (PJV)*, Section 7.2
f Particle-bound consituents have both vapor and particle DFs. The amount of the constituent in each phase is determined by the constituent's Fv value.

Table 14 LAW Vitrification Emissions Analysis Equipment Decontamination Factors

Inorganic Constituents	Melter		SBS		WESP		HEPA (First)		HEPA (Second)		LAW S-AC Column		Thermal Cat Ox		NOx SCR		LAW Caustic Scrubber	
	DF	Ref	DF	Ref	DF	Ref	DF	Ref	DF	Ref	DF	Ref	DF	Ref	DF	Ref	DF	Ref
Silver	30	(1)	1.8	(1)	50	(1)	2,000	(2)	100	(2)	1	(5)	1	(5)	1	(5)	1	(6)
Aluminum	100	(1)	40	(1)	11	(1)	2,000	(2)	100	(2)	1	(5)	1	(5)	1	(5)	1	(6)
Arsenic	6	(1)	4.8	(1)	20	(1)	2,000	(2)	100	(2)	1	(5)	1	(5)	1	(5)	1	(6)
Boron	30	(1)	16.1	(1)	11	(1)	2,000	(2)	100	(2)	1	(5)	1	(5)	1	(5)	1	(6)
Barium	100	(1)	90	(1)	12	(1)	2,000	(2)	100	(2)	1	(5)	1	(5)	1	(5)	1	(6)
Bismuth	80	(1)	2.6	(1)	30	(1)	2,000	(2)	100	(2)	1	(5)	1	(5)	1	(5)	1	(6)
Calcium	75	(1)	20	(1)	11	(1)	2,000	(2)	100	(2)	1	(5)	1	(5)	1	(5)	1	(6)
Cadmium	10	(1)	1.6	(1)	80	(1)	2,000	(2)	100	(2)	1	(5)	1	(5)	1	(5)	1	(6)
Chloride	1.9	(1)	3.4	(1)	20	(1)	2,000	(2)	100	(2)	1	(5)	1	(5)	1	(5)	1	(6)
Chromium (hexavalent)	41	(1)	3.4	(1)	13	(1)	2,000	(2)	100	(2)	1	(5)	1	(5)	1	(5)	1	(6)
Copper	200	(1)	2.9	(1)	30	(1)	2,000	(2)	100	(2)	1	(5)	1	(5)	1	(5)	1	(6)
Flouride	4	(1)	4.8	(1)	20	(1)	2,000	(2)	100	(2)	1	(5)	1	(5)	1	(5)	1	(6)
Iron	200	(1)	40	(1)	11	(1)	2,000	(2)	100	(2)	1	(5)	1	(5)	1	(5)	1	(6)
Mercury	1	(1)	3.7	(1)	1	(1)	1	(2)	1	(2)	100	(8)	1	(1)	1	(1)	1	(1)
Potassium	20	(1)	1.7	(1)	60	(1)	2,000	(2)	100	(2)	1	(5)	1	(5)	1	(5)	1	(6)
Lithium	100	(1)	2.1	(1)	40	(1)	2,000	(2)	100	(2)	1	(5)	1	(5)	1	(5)	1	(6)
Magnesium	200	(1)	3.6	(1)	10	(1)	2,000	(2)	100	(2)	1	(5)	1	(5)	1	(5)	1	(6)
Manganese	75	(1)	30	(1)	10	(1)	2,000	(2)	100	(2)	1	(5)	1	(5)	1	(5)	1	(6)
Sodium	100	(1)	2.6	(1)	30	(1)	2,000	(2)	100	(2)	1	(5)	1	(5)	1	(5)	1	(6)
Nickel	89	(1)	4	(1)	20	(1)	2,000	(2)	100	(2)	1	(5)	1	(5)	1	(5)	1	(6)
Nitrite	Destroyed	(1)	6.5	(1)	20	(1)	2,000	(2)	100	(2)	1	(5)	1	(5)	1	(5)	1	(6)
Nitrate	Destroyed	(1)	6.5	(1)	20	(1)	2,000	(2)	100	(2)	1	(5)	1	(5)	1	(5)	1	(6)
Hydroxide	1	(1)	6.5	(1)	20	(1)	2,000	(2)	100	(2)	1	(5)	1	(5)	1	(5)	1	(6)
Phosphorous	40	(1)	1.7	(1)	20	(1)	2,000	(2)	100	(2)	1	(5)	1	(5)	1	(5)	1	(6)
Lead	82	(1)	2.3	(1)	36	(1)	2,000	(2)	100	(2)	1	(5)	1	(5)	1	(5)	1	(6)
Phosphate	40	(1)	1.7	(1)	20	(1)	2,000	(2)	100	(2)	1	(5)	1	(5)	1	(5)	1	(6)
Total Sulfur	Calculated	(1)	20	(1)	1	(1)	2,000	(2)	100	(2)	1	(5)	1	(5)	1	(5)	1	(6)
Silicon	300	(1)	30	(1)	11	(1)	2,000	(2)	100	(2)	1	(5)	1	(5)	1	(5)	1	(6)
Sulfate	Calculated	(1)	5.6	(1)	20	(1)	2,000	(2)	100	(2)	1	(5)	1	(5)	1	(5)	1	(6)
Strontium (total)	100	(1)	40	(1)	11	(1)	2,000	(2)	100	(2)	1	(5)	1	(5)	1	(5)	1	(6)
Zinc	100	(1)	17.7	(1)	11	(1)	2,000	(2)	100	(2)	1	(5)	1	(5)	1	(5)	1	(6)
Zirconium	300	(1)	16.7	(1)	10	(1)	2,000	(2)	100	(2)	1	(5)	1	(5)	1	(5)	1	(6)
Beryllium	200	(1)	40	(1)	11	(1)	2,000	(2)	100	(2)	1	(5)	1	(5)	1	(5)	1	(6)
Cyanide	40	(1)	6.5	(1)	20	(1)	2,000	(2)	100	(2)	1	(5)	1	(5)	1	(5)	1	(6)
Cobalt	200	(1)	3.2	(1)	20	(1)	2,000	(2)	100	(2)	1	(5)	1	(5)	1	(5)	1	(6)

Table 14 LAW Vitrification Emissions Analysis Equipment Decontamination Factors

Inorganic Constituents	Melter		SBS		WESP		HEPA (First)		HEPA (Second)		LAW S-AC Column		Thermal Cat Ox		NOx SCR		LAW Caustic Scrubber	
	DF	Ref	DF	Ref	DF	Ref	DF	Ref	DF	Ref	DF	Ref	DF	Ref	DF	Ref	DF	Ref
Molybdenum	80	(1)	8.7	(1)	480	(1)	2,000	(2)	100	(2)	1	(5)	1	(5)	1	(5)	1	(6)
Rhodium	53	(1)	3.3	(1)	480	(1)	2,000	(2)	100	(2)	1	(5)	1	(5)	1	(5)	1	(6)
Antimony	80	(1)	3.7	(1)	12	(1)	2,000	(2)	100	(2)	1	(5)	1	(5)	1	(5)	1	(6)
Selenium	1.7	(1)	8.4	(1)	100	(1)	2,000	(2)	100	(2)	1	(5)	1	(5)	1	(5)	1	(6)
Tin	200	(1)	40	(1)	11	(1)	2,000	(2)	100	(2)	1	(5)	1	(5)	1	(5)	1	(6)
Tantalum	250	(1)	73	(1)	50	(1)	2,000	(2)	100	(2)	1	(5)	1	(5)	1	(5)	1	(6)
Thallium	6	(1)	73	(1)	100	(1)	2,000	(2)	100	(2)	1	(5)	1	(5)	1	(5)	1	(6)
Uranium	200	(1)	40	(1)	11	(1)	2,000	(2)	100	(2)	1	(5)	1	(5)	1	(5)	1	(6)
Vanadium	80	(1)	5	(1)	860	(1)	2,000	(2)	100	(2)	1	(5)	1	(5)	1	(5)	1	(6)
Tungsten	250	(1)	73	(1)	50	(1)	2,000	(2)	100	(2)	1	(5)	1	(5)	1	(5)	1	(6)
Yttrium	100	(1)	40	(1)	11	(1)	2,000	(2)	100	(2)	1	(5)	1	(5)	1	(5)	1	(6)
Carbon monoxide	Produced	(1)	1	(1)	1	(1)	1	(2)	1	(2)	1	(11)	20	(10)	1	(11)	1	(11)
Carbon Dioxide	Produced	(1)	1	(1)	1	(1)	1	(2)	1	(2)	1	(11)	1	(11)	1	(11)	1	(7)
Nitric Oxide	Produced	(1)	1	(1)	1	(1)	1	(2)	1	(2)	1	(11)	1	(11)	20	(9)	1.1	(7)
Nitrogen Dioxide	Produced	(1)	1	(1)	1	(1)	1	(2)	1	(2)	1	(11)	1	(11)	20	(9)	1.1	(7)
Hydrochloric Acid	Produced	(1)	1	(1)	1.3	(1)	1	(2)	1	(2)	33.3	(8)	1	(11)	1	(11)	1.1	(7)
Hydrofluoric Acid	Produced	(1)	2	(1)	1.1	(1)	1	(2)	1	(2)	33.3	(8)	1	(11)	1	(11)	1.1	(7)
Sulfur dioxide	Produced	(1)	1	(1)	1	(1)	1	(2)	1	(2)	1	(11)	1.2	(10)	1	(11)	33.3	(7)
Ammonia/Ammonium	Produced	(1)	Calculated	(1)	1	(1)	1	(2)	1	(2)	1	(11)	1	(11)	1	(11)	1	(12)
Americium-241	80	(1)	40	(1)	11	(1)	2,000	(2)	100	(2)	1	(5)	1	(5)	1	(5)	1	(6)
Carbon-14	1	(4)	1	(4)	1	(4)	1	(4)	1	(4)	1	(4)	1	(4)	1	(4)	1	(7)
Cobalt-60	200	(1)	3.2	(1)	20	(1)	2,000	(2)	100	(2)	1	(5)	1	(5)	1	(5)	1	(6)
Curium-243	200	(1)	40	(1)	11	(1)	2,000	(2)	100	(2)	1	(5)	1	(5)	1	(5)	1	(6)
Curium-244	200	(1)	40	(1)	11	(1)	2,000	(2)	100	(2)	1	(5)	1	(5)	1	(5)	1	(6)
Cesium-137	2	(1)	2.4	(1)	30	(1)	2,000	(2)	100	(2)	1	(5)	1	(5)	1	(5)	1	(6)
Europium-152	200	(1)	40	(1)	11	(1)	2,000	(2)	100	(2)	1	(5)	1	(5)	1	(5)	1	(6)
Europium-154	200	(1)	40	(1)	11	(1)	2,000	(2)	100	(2)	1	(5)	1	(5)	1	(5)	1	(6)
Europium-155	200	(1)	40	(1)	11	(1)	2,000	(2)	100	(2)	1	(5)	1	(5)	1	(5)	1	(6)
Tritium	1	(3)	Calculated	(3)	Calculated	(3)	1	(3)	1	(3)	1	(3)	1	(3)	1	(3)	1	(3)
Iodine-129	1.1	(1)	1.2	(1)	1	(1)	1	(2)	1	(2)	100	(8)	1	(1)	1	(1)	1.1	(7)
Nickel-63	89	(1)	4	(1)	20	(1)	2,000	(2)	100	(2)	1	(5)	1	(5)	1	(5)	1	(6)
Neptunium-237	200	(1)	40	(1)	11	(1)	2,000	(2)	100	(2)	1	(5)	1	(5)	1	(5)	1	(6)
Plutonium-238	200	(1)	40	(1)	11	(1)	2,000	(2)	100	(2)	1	(5)	1	(5)	1	(5)	1	(6)
Plutonium-239	200	(1)	40	(1)	11	(1)	2,000	(2)	100	(2)	1	(5)	1	(5)	1	(5)	1	(6)
Plutonium-240	200	(1)	40	(1)	11	(1)	2,000	(2)	100	(2)	1	(5)	1	(5)	1	(5)	1	(6)

Table 14 LAW Vitrification Emissions Analysis Equipment Decontamination Factors

Inorganic Constituents	Melter		SBS		WESP		HEPA (First)		HEPA (Second)		LAW S-AC Column		Thermal Cat Ox		NOx SCR		LAW Caustic Scrubber	
	DF	Ref	DF	Ref	DF	Ref	DF	Ref	DF	Ref	DF	Ref	DF	Ref	DF	Ref	DF	Ref
Plutonium-241	200	(1)	40	(1)	11	(1)	2,000	(2)	100	(2)	1	(5)	1	(5)	1	(5)	1	(6)
Antimony-125	80	(1)	3.7	(1)	12	(1)	2,000	(2)	100	(2)	1	(5)	1	(5)	1	(5)	1	(6)
Samarium-151	1,370	(1)	73	(1)	50	(1)	2,000	(2)	100	(2)	1	(5)	1	(5)	1	(5)	1	(6)
Tin-126	200	(1)	40	(1)	11	(1)	2,000	(2)	100	(2)	1	(5)	1	(5)	1	(5)	1	(6)
Strontium-90	100	(1)	40	(1)	11	(1)	2,000	(2)	100	(2)	1	(5)	1	(5)	1	(5)	1	(6)
Technetium-99	3	(1)	3.3	(1)	20	(1)	2,000	(2)	100	(2)	1	(5)	1	(5)	1	(5)	1	(6)
Thorium-232	250	(1)	73	(1)	50	(1)	2,000	(2)	100	(2)	1	(5)	1	(5)	1	(5)	1	(6)
Uranium-233	200	(1)	40	(1)	11	(1)	2,000	(2)	100	(2)	1	(5)	1	(5)	1	(5)	1	(6)
Uranium-234	200	(1)	40	(1)	11	(1)	2,000	(2)	100	(2)	1	(5)	1	(5)	1	(5)	1	(6)
Uranium-235	200	(1)	40	(1)	11	(1)	2,000	(2)	100	(2)	1	(5)	1	(5)	1	(5)	1	(6)
Uranium-236	200	(1)	40	(1)	11	(1)	2,000	(2)	100	(2)	1	(5)	1	(5)	1	(5)	1	(6)
Uranium-238	200	(1)	40	(1)	11	(1)	2,000	(2)	100	(2)	1	(5)	1	(5)	1	(5)	1	(6)
Yttrium-90	100	(1)	40	(1)	11	(1)	2,000	(2)	100	(2)	1	(5)	1	(5)	1	(5)	1	(6)
Ruthenium-106	3.9	(1)	3.6	(1)	4	(1)	2,000	(2)	100	(2)	1	(5)	1	(5)	1	(5)	1	(6)
Cesium-134	2	(1)	2.4	(1)	30	(1)	2,000	(2)	100	(2)	1	(5)	1	(5)	1	(5)	1	(6)
Barium-137m	2	(1)	2.4	(1)	30	(1)	2,000	(2)	100	(2)	1	(5)	1	(5)	1	(5)	1	(6)
Plutonium-242	200	(1)	40	(1)	11	(1)	2,000	(2)	100	(2)	1	(5)	1	(5)	1	(5)	1	(6)
Radium-226	6	(1)	73	(1)	50	(1)	2,000	(2)	100	(2)	1	(5)	1	(5)	1	(5)	1	(6)
Uranium-232	200	(1)	40	(1)	11	(1)	2,000	(2)	100	(2)	1	(5)	1	(5)	1	(5)	1	(6)
Protactinium-231	1,370	(1)	73	(1)	50	(1)	2,000	(2)	100	(2)	1	(5)	1	(5)	1	(5)	1	(6)
Nickel-59	89	(1)	4	(1)	20	(1)	2,000	(2)	100	(2)	1	(5)	1	(5)	1	(5)	1	(6)
Actinium-227	1,370	(1)	73	(1)	50	(1)	2,000	(2)	100	(2)	1	(5)	1	(5)	1	(5)	1	(6)
Americium-243	80	(1)	40	(1)	11	(1)	2,000	(2)	100	(2)	1	(5)	1	(5)	1	(5)	1	(6)
Radium-228	6	(1)	73	(1)	50	(1)	2,000	(2)	100	(2)	1	(5)	1	(5)	1	(5)	1	(6)
Curium-242	200	(1)	40	(1)	11	(1)	2,000	(2)	100	(2)	1	(5)	1	(5)	1	(5)	1	(6)
Thorium-229	250	(1)	73	(1)	50	(1)	2,000	(2)	100	(2)	1	(5)	1	(5)	1	(5)	1	(6)
Zirconium-93	300	(1)	17	(1)	10	(1)	2,000	(2)	100	(2)	1	(5)	1	(5)	1	(5)	1	(6)
Niobium-93m	1,000	(1)	73	(1)	50	(1)	2,000	(2)	100	(2)	1	(5)	1	(5)	1	(5)	1	(6)
Cadmium-113m	10	(1)	1.6	(1)	80	(1)	2,000	(2)	100	(2)	1	(5)	1	(5)	1	(5)	1	(6)
Selenium-79	1.7	(1)	8.4	(1)	100	(1)	2,000	(2)	100	(2)	1	(5)	1	(5)	1	(5)	1	(6)

Table 14 LAW Vitrification Emissions Analysis Equipment Decontamination Factors

Notes:
The following notes correspond to Table 14, LAW Vitrification Emissions Analysis Equipment Decontamination Factors, and provide the bases for vitrification melter and offgas decontamination factors for the facility emissions report.

1 Based on CCN 128548, "Air Emissions Vitrification Melters and Primary Offgas Decontamination Factors".

2 Based on the BARCT analysis, 24590-WTP-RPT-ENV-01-004, Rev 1, Section 4.2.2.1.

3 It is assumed that tritium (H-3) will have the same decontamination factor (DF) as water in the respective process unit. This DF is calculated by the flowsheet depending on the operating conditions of the unit.

4 It is assumed that carbon-14 will have the same DF as carbon dioxide in the respective process unit. No reduction in capture efficiency has been incorporated.

5 No particulate removal efficiency is assumed.

6 The LAW caustic scrubber is assumed to have a particulate scrubbing efficiency DF of 1.

7 Although the LAW caustic scrubber may have a small collection efficiency (<10 %) for carbon dioxide, it is assumed to be 0 % (DF = 1). Since the unit has not been designed as an abatement technology for carbon dioxide (i.e., carbon-14), the unit will be operated to minimize carbon dioxide capture in order to minimize solids sent to the Hanford Effluent Treatment Facility. Therefore, no capture of carbon dioxide (i.e., carbon-14) removal can be assumed. Acid gas and iodine removal requirements previously identified for the caustic scrubber have been moved to the sulfur impregnated carbon beds (24590-LAW-MKC-LVP-00004). Some acid gas and iodine removal is still expected in this unit and therefore a 10 % reduction is assumed for this evaluation (DF = 1.1). Due to lower pH operation of the scrubber, NO_x removal efficiency is expected to be lower. Therefore, a 10 % removal (DF = 1.1) is also assumed for NO_x in this evaluation. The removal efficiency of SO_x in the scrubber is stated as 97 % (DF = 33.3).

8 The design basis mercury DFs for the LAW S-AC columns is 100, per document 24590-LAW-MKC-LVP-00005. No reduction in efficiency is recommended since the unit's efficiency will effectively be infinite until breakthrough is approached. This unit also removes iodine and acid gases. The iodine removal efficiency is specified as 99 % (DF = 100) and for acid gases is 97 % (DF = 33.3).

9 Based on the LAW catalytic oxidizer/reducer datasheet (24590-LAW-MKD-LVP-00012), the NO_x removal efficiency is 98 % (DF = 50), but to bound the NO_x emissions, a DF of 20 (95 % removal efficiency) is used.

10 The thermal catalytic oxidizer (TCO) is known to oxidize both carbon monoxide (CO) and sulfur dioxide (SO_2) to carbon dioxide (CO_2) and sulfur trioxide (SO_3), respectively. Per contacts with catalyst vendors, the oxidation efficiency of carbon monoxide tends to be higher then the realized organic destruction efficiency, while the oxidation of sulfur dioxide tends to be less. However, to be conservative, the carbon monoxide conversion DF in the TCO emissions will be assumed to be equal to the organic DF destruction removal efficiency. For SO_2, the vendor recommended an oxidization efficiency of 20 % (DF = 1.2).

11 No gas scrubbing efficiency is assumed.

12 It is assumed that no ammonia (DF = 1) will be removed in the LAW caustic scrubber because of the alkaline conditions.

Table 15 HLW Vitrification Emissions Analysis Equipment Decontamination Factors

Inorganic Constituents	HLW Melter		SBS		WESP		HEME		HEPA (First)		HEPA (Second)		AgZ Column		S-AC Column		Thermal Cat Ox		NOx SCR	
	DF	Ref	DF	Ref	DF	Ref	DF	Ref	DF	Ref	DF	Ref	DF	Ref	DF	Ref	DF	Ref	DF	Ref
Silver	30	(1)	1.8	(1)	50	(1)	100	(1)	2,000	(2)	100	(2)	1	(5)	1	(5)	1	(5)	1	(5)
Aluminum	100	(1)	40	(1)	11	(1)	90	(1)	2,000	(2)	100	(2)	1	(5)	1	(5)	1	(5)	1	(5)
Arsenic	21	(1)	4.8	(1)	20	(1)	90	(1)	2,000	(2)	100	(2)	1	(5)	1	(5)	1	(5)	1	(5)
Boron	30	(1)	30	(1)	11	(1)	90	(1)	2,000	(2)	100	(2)	1	(5)	1	(5)	1	(5)	1	(5)
Barium	100	(1)	24	(1)	12	(1)	90	(1)	2,000	(2)	100	(2)	1	(5)	1	(5)	1	(5)	1	(5)
Bismuth	58	(1)	2.6	(1)	30	(1)	100	(1)	2,000	(2)	100	(2)	1	(5)	1	(5)	1	(5)	1	(5)
Calcium	75	(1)	20	(1)	11	(1)	90	(1)	2,000	(2)	100	(2)	1	(5)	1	(5)	1	(5)	1	(5)
Cadmium	10	(1)	1.6	(1)	80	(1)	110	(1)	2,000	(2)	100	(2)	1	(5)	1	(5)	1	(5)	1	(5)
Chloride	1.9	(1)	3.4	(1)	20	(1)	100	(1)	2,000	(2)	100	(2)	1	(5)	1	(5)	1	(5)	1	(5)
Chromium (hexavalent)	100	(1)	3.4	(1)	13	(1)	90	(1)	2,000	(2)	100	(2)	1	(5)	1	(5)	1	(5)	1	(5)
Copper	170	(1)	2.9	(1)	30	(1)	100	(1)	2,000	(2)	100	(2)	1	(5)	1	(5)	1	(5)	1	(5)
Flouride	4	(1)	4.8	(1)	20	(1)	90	(1)	2,000	(2)	100	(2)	1	(5)	1	(5)	1	(5)	1	(5)
Iron	120	(1)	40	(1)	11	(1)	90	(1)	2,000	(2)	100	(2)	1	(5)	1	(5)	1	(5)	1	(5)
Mercury	1	(1)	3.7	(1)	1	(1)	1	(1)	1	(2)	1	(2)	1	(1)	1000	(7)	1	(1)	1	(1)
Potassium	20	(1)	1.7	(1)	60	(1)	110	(1)	2,000	(2)	100	(2)	1	(5)	1	(5)	1	(5)	1	(5)
Lithium	100	(1)	2.1	(1)	40	(1)	100	(1)	2,000	(2)	100	(2)	1	(5)	1	(5)	1	(5)	1	(5)
Magnesium	63	(1)	20	(1)	10	(1)	90	(1)	2,000	(2)	100	(2)	1	(5)	1	(5)	1	(5)	1	(5)
Manganese	75	(1)	30	(1)	10	(1)	90	(1)	2,000	(2)	100	(2)	1	(5)	1	(5)	1	(5)	1	(5)
Sodium	100	(1)	2.6	(1)	30	(1)	100	(1)	2,000	(2)	100	(2)	1	(5)	1	(5)	1	(5)	1	(5)
Nickel	89	(1)	5.9	(1)	20	(1)	90	(1)	2,000	(2)	100	(2)	1	(5)	1	(5)	1	(5)	1	(5)
Nitrite	Destroyed	(1)	18.2	(1)	20	(1)	90	(1)	2,000	(2)	100	(2)	1	(5)	1	(5)	1	(5)	1	(5)
Nitrate	Destroyed	(1)	18.2	(1)	20	(1)	90	(1)	2,000	(2)	100	(2)	1	(5)	1	(5)	1	(5)	1	(5)
Hydroxide	1	(1)	18.2	(1)	20	(1)	90	(1)	2,000	(2)	100	(2)	1	(5)	1	(5)	1	(5)	1	(5)
Phosphorous	40	(1)	18.2	(1)	20	(1)	90	(1)	2,000	(2)	100	(2)	1	(5)	1	(5)	1	(5)	1	(5)
Lead	80	(1)	2.3	(1)	36	(1)	100	(1)	2,000	(2)	100	(2)	1	(5)	1	(5)	1	(5)	1	(5)
Phosphate	40	(1)	18.2	(1)	20	(1)	90	(1)	2,000	(2)	100	(2)	1	(5)	1	(5)	1	(5)	1	(5)
Total Sulfur	3	(1)	8	(1)	1	(1)	1	(1)	2,000	(2)	100	(2)	1	(5)	1	(5)	1	(5)	1	(5)
Silicon	230	(1)	30	(1)	11	(1)	90	(1)	2,000	(2)	100	(2)	1	(5)	1	(5)	1	(5)	1	(5)
Sulfate	2.7	(1)	4	(1)	20	(1)	90	(1)	2,000	(2)	100	(2)	1	(5)	1	(5)	1	(5)	1	(5)
Strontium (total)	100	(1)	40	(1)	11	(1)	90	(1)	2,000	(2)	100	(2)	1	(5)	1	(5)	1	(5)	1	(5)
Zinc	100	(1)	20	(1)	11	(1)	90	(1)	2,000	(2)	100	(2)	1	(5)	1	(5)	1	(5)	1	(5)
Zirconium	190	(1)	30	(1)	10	(1)	90	(1)	2,000	(2)	100	(2)	1	(5)	1	(5)	1	(5)	1	(5)
Beryllium	120	(1)	40	(1)	11	(1)	90	(1)	2,000	(2)	100	(2)	1	(5)	1	(5)	1	(5)	1	(5)
Cyanide	40	(1)	18.2	(1)	20	(1)	90	(1)	2,000	(2)	100	(2)	1	(5)	1	(5)	1	(5)	1	(5)
Cobalt	72	(1)	3.2	(1)	20	(1)	100	(1)	2,000	(2)	100	(2)	1	(5)	1	(5)	1	(5)	1	(5)
Molybdenum	58	(1)	8.7	(1)	200	(1)	490	(1)	2,000	(2)	100	(2)	1	(5)	1	(5)	1	(5)	1	(5)
Rhodium	37	(1)	6.1	(1)	530	(1)	500	(1)	2,000	(2)	100	(2)	1	(5)	1	(5)	1	(5)	1	(5)
Antimony	100	(1)	3.7	(1)	12	(1)	90	(1)	2,000	(2)	100	(2)	1	(5)	1	(5)	1	(5)	1	(5)

Table 15 HLW Vitrification Emissions Analysis Equipment Decontamination Factors

Inorganic Constituents	HLW Melter		SBS		WESP		HEME		HEPA (First)		HEPA (Second)		AgZ Column		S-AC Column		Thermal Cat Ox		NOx SCR	
	DF	Ref	DF	Ref	DF	Ref	DF	Ref	DF	Ref	DF	Ref	DF	Ref	DF	Ref	DF	Ref	DF	Ref
Selenium	2	(1)	5.9	(1)	200	(1)	490	(1)	2,000	(2)	100	(2)	1	(5)	1	(5)	1	(5)	1	(5)
Tin	120	(1)	40	(1)	11	(1)	90	(1)	2,000	(2)	100	(2)	1	(5)	1	(5)	1	(5)	1	(5)
Tantalum	72	(1)	427	(1)	20	(1)	470	(1)	2,000	(2)	100	(2)	1	(5)	1	(5)	1	(5)	1	(5)
Thallium	72	(1)	427	(1)	20	(1)	470	(1)	2,000	(2)	100	(2)	1	(5)	1	(5)	1	(5)	1	(5)
Uranium	72	(1)	40	(1)	11	(1)	90	(1)	2,000	(2)	100	(2)	1	(5)	1	(5)	1	(5)	1	(5)
Vanadium	58	(1)	4.6	(1)	370	(1)	500	(1)	2,000	(2)	100	(2)	1	(5)	1	(5)	1	(5)	1	(5)
Tungsten	72	(1)	427	(1)	20	(1)	470	(1)	2,000	(2)	100	(2)	1	(5)	1	(5)	1	(5)	1	(5)
Yttrium	72	(1)	40	(1)	11	(1)	90	(1)	2,000	(2)	100	(2)	1	(5)	1	(5)	1	(5)	1	(5)
Carbon monoxide	Produced	(1)	1	(1)	1	(1)	1	(1)	1	(2)	1	(2)	1	(10)	1	(10)	20	(9)	1	(10)
Carbon Dioxide	Produced	(1)	1	(1)	1	(1)	1	(1)	1	(2)	1	(2)	1	(10)	1	(10)	1	(10)	1	(10)
Nitric Oxide	Produced	(1)	1	(1)	1	(1)	1	(1)	1	(2)	1	(2)	1	(10)	1	(10)	1	(10)	20	(8)
Nitrogen Dioxide	Produced	(1)	1	(1)	1	(1)	1	(1)	1	(2)	1	(2)	1	(10)	1	(10)	1	(10)	20	(8)
Hydrochloric Acid	Produced	(1)	1	(1)	1.3	(1)	1	(1)	1	(2)	1	(2)	1000	(6)	1	(10)	1	(10)	1	(10)
Hydrofluoric Acid	Produced	(1)	2	(1)	1.14	(1)	2	(1)	1	(2)	1	(2)	1000	(6)	1	(10)	1	(10)	1	(10)
Sulfur dioxide	Produced	(1)	1	(1)	1	(1)	1	(1)	1	(2)	1	(2)	1	(10)	1	(10)	1.2	(9)	1	(10)
Ammonia/Ammonium	Produced	(1)	Calculated	(1)	1.1	(1)	1.01	(1)	1	(2)	1	(2)	1	(10)	1	(10)	1	(10)	1	(10)
Americium-241	58	(1)	40	(1)	11	(1)	90	(1)	2,000	(2)	100	(2)	1	(5)	1	(5)	1	(5)	1	(5)
Carbon-14	1	(4)	1	(4)	1	(4)	1	(4)	1	(4)	1	(4)	1	(4)	1	(4)	1	(4)	1	(4)
Cobalt-60	72	(1)	3.2	(1)	20	(1)	100	(1)	2,000	(2)	100	(2)	1	(5)	1	(5)	1	(5)	1	(5)
Curium-243	72	(1)	40	(1)	11	(1)	90	(1)	2,000	(2)	100	(2)	1	(5)	1	(5)	1	(5)	1	(5)
Curium-244	72	(1)	40	(1)	11	(1)	90	(1)	2,000	(2)	100	(2)	1	(5)	1	(5)	1	(5)	1	(5)
Cesium-137	30	(1)	2.4	(1)	30	(1)	100	(1)	2,000	(2)	100	(2)	1	(5)	1	(5)	1	(5)	1	(5)
Europium-152	72	(1)	40	(1)	11	(1)	90	(1)	2,000	(2)	100	(2)	1	(5)	1	(5)	1	(5)	1	(5)
Europium-154	72	(1)	40	(1)	11	(1)	90	(1)	2,000	(2)	100	(2)	1	(5)	1	(5)	1	(5)	1	(5)
Europium-155	72	(1)	40	(1)	11	(1)	90	(1)	2,000	(2)	100	(2)	1	(5)	1	(5)	1	(5)	1	(5)
Tritium	1	(3)	Calculated	(3)	Calculated	(3)	Calculated	(3)	1	(3)	1	(3)	1	(3)	1	(3)	1	(3)	1	(3)
Iodine-129	1.1	(1)	1.1	(1)	1	(1)	1	(1)	1	(2)	1	(2)	1000	(6)	1	(1)	1	(1)	1	(1)
Nickel-63	89	(1)	5.9	(1)	20	(1)	90	(1)	2,000	(2)	100	(2)	1	(5)	1	(5)	1	(5)	1	(5)
Neptunium-237	72	(1)	40	(1)	11	(1)	90	(1)	2,000	(2)	100	(2)	1	(5)	1	(5)	1	(5)	1	(5)
Plutonium-238	72	(1)	40	(1)	11	(1)	90	(1)	2,000	(2)	100	(2)	1	(5)	1	(5)	1	(5)	1	(5)
Plutonium-239	72	(1)	40	(1)	11	(1)	90	(1)	2,000	(2)	100	(2)	1	(5)	1	(5)	1	(5)	1	(5)
Plutonium-240	72	(1)	40	(1)	11	(1)	90	(1)	2,000	(2)	100	(2)	1	(5)	1	(5)	1	(5)	1	(5)
Plutonium-241	72	(1)	40	(1)	11	(1)	90	(1)	2,000	(2)	100	(2)	1	(5)	1	(5)	1	(5)	1	(5)
Antimony-125	100	(1)	3.7	(1)	12	(1)	90	(1)	2,000	(2)	100	(2)	1	(5)	1	(5)	1	(5)	1	(5)
Samarium-151	130	(1)	427	(1)	20	(1)	470	(1)	2,000	(2)	100	(2)	1	(5)	1	(5)	1	(5)	1	(5)
Tin-126	120	(1)	40	(1)	11	(1)	90	(1)	2,000	(2)	100	(2)	1	(5)	1	(5)	1	(5)	1	(5)
Strontium-90	100	(1)	40	(1)	11	(1)	90	(1)	2,000	(2)	100	(2)	1	(5)	1	(5)	1	(5)	1	(5)
Technetium-99	3	(1)	3.9	(1)	20	(1)	90	(1)	2,000	(2)	100	(2)	1	(5)	1	(5)	1	(5)	1	(5)

Table 15 HLW Vitrification Emissions Analysis Equipment Decontamination Factors

Inorganic Constituents	HLW Melter		SBS		WESP		HEME		HEPA (First)		HEPA (Second)		AgZ Column		S-AC Column		Thermal Cat Ox		NOx SCR	
	DF	Ref	DF	Ref	DF	Ref	DF	Ref	DF	Ref	DF	Ref	DF	Ref	DF	Ref	DF	Ref	DF	Ref
Thorium-232	72	(1)	427	(1)	20	(1)	470	(1)	2,000	(2)	100	(2)	1	(5)	1	(5)	1	(5)	1	(5)
Uranium-233	72	(1)	40	(1)	11	(1)	90	(1)	2,000	(2)	100	(2)	1	(5)	1	(5)	1	(5)	1	(5)
Uranium-234	72	(1)	40	(1)	11	(1)	90	(1)	2,000	(2)	100	(2)	1	(5)	1	(5)	1	(5)	1	(5)
Uranium-235	72	(1)	40	(1)	11	(1)	90	(1)	2,000	(2)	100	(2)	1	(5)	1	(5)	1	(5)	1	(5)
Uranium-236	72	(1)	40	(1)	11	(1)	90	(1)	2,000	(2)	100	(2)	1	(5)	1	(5)	1	(5)	1	(5)
Uranium-238	72	(1)	40	(1)	11	(1)	90	(1)	2,000	(2)	100	(2)	1	(5)	1	(5)	1	(5)	1	(5)
Yttrium-90	100	(1)	40	(1)	11	(1)	90	(1)	2,000	(2)	100	(2)	1	(5)	1	(5)	1	(5)	1	(5)
Ruthenium-106	3.9	(1)	3.6	(1)	20	(1)	90	(1)	2,000	(2)	100	(2)	1	(5)	1	(5)	1	(5)	1	(5)
Cesium-134	30	(1)	2.4	(1)	30	(1)	100	(1)	2,000	(2)	100	(2)	1	(5)	1	(5)	1	(5)	1	(5)
Barium-137m	30	(1)	2.4	(1)	30	(1)	100	(1)	2,000	(2)	100	(2)	1	(5)	1	(5)	1	(5)	1	(5)
Plutonium-242	72	(1)	40	(1)	11	(1)	90	(1)	2,000	(2)	100	(2)	1	(5)	1	(5)	1	(5)	1	(5)
Radium-226	4	(1)	427	(1)	20	(1)	470	(1)	2,000	(2)	100	(2)	1	(5)	1	(5)	1	(5)	1	(5)
Uranium-232	72	(1)	40	(1)	11	(1)	90	(1)	2,000	(2)	100	(2)	1	(5)	1	(5)	1	(5)	1	(5)
Protactinium-231	72	(1)	427	(1)	20	(1)	470	(1)	2,000	(2)	100	(2)	1	(5)	1	(5)	1	(5)	1	(5)
Nickel-59	89	(1)	5.9	(1)	20	(1)	90	(1)	2,000	(2)	100	(2)	1	(5)	1	(5)	1	(5)	1	(5)
Actinium-227	130	(1)	427	(1)	20	(1)	470	(1)	2,000	(2)	100	(2)	1	(5)	1	(5)	1	(5)	1	(5)
Americium-243	58	(1)	40	(1)	11	(1)	90	(1)	2,000	(2)	100	(2)	1	(5)	1	(5)	1	(5)	1	(5)
Radium-228	4	(1)	427	(1)	20	(1)	470	(1)	2,000	(2)	100	(2)	1	(5)	1	(5)	1	(5)	1	(5)
Curium-242	72	(1)	40	(1)	11	(1)	90	(1)	2,000	(2)	100	(2)	1	(5)	1	(5)	1	(5)	1	(5)
Thorium-229	72	(1)	427	(1)	20	(1)	470	(1)	2,000	(2)	100	(2)	1	(5)	1	(5)	1	(5)	1	(5)
Zirconium-93	190	(1)	30	(1)	10	(1)	90	(1)	2,000	(2)	100	(2)	1	(5)	1	(5)	1	(5)	1	(5)
Niobium-93m	72	(1)	427	(1)	20	(1)	470	(1)	2,000	(2)	100	(2)	1	(5)	1	(5)	1	(5)	1	(5)
Cadmium-113m	10	(1)	1.6	(1)	80	(1)	110	(1)	2,000	(2)	100	(2)	1	(5)	1	(5)	1	(5)	1	(5)
Selenium-79	2	(1)	5.9	(1)	200	(1)	490	(1)	2,000	(2)	100	(2)	1	(5)	1	(5)	1	(5)	1	(5)

Table 15 HLW Vitrification Emissions Analysis Equipment Decontamination Factors

Notes:
The following notes correspond to Table 15, HLW Vitrification Emissions Analysis Equipment Decontamination Factors, and provide the bases for vitrification melter and offgas decontamination factors for the facility emissions report.

1 Based on CCN 128548, "Air Emissions Vitrification Melters and Primary Offgas Decontamination Factors".

2 Based on the BARCT analysis, 24590-WTP-RPT-ENV-01-004, Rev 1, Section 4.2.2.1.

3 It is assumed that tritium (H-3) will have the same decontamination factor (DF) as water in the respective process unit. This DF is calculated by the flowsheet depending on the operating conditions of the unit.

4 It is assumed that carbon-14 will have the same DF as carbon dioxide in the respective process unit. No reduction in capture efficiency has been incorporated.

5 No particulate removal efficiency is assumed.

6 Based on Section 7.13, calculation 24590-HLW-MKC-HOP-00002, Rev B, no reduction in efficiency is recommended since the silver mordenite's efficiency will effectively be infinite until breakthrough is approached.

7 The design basis mercury DFs for the HLW S-AC column is 1000, per document 24590-HLW-MVD-HOP-00015. No reduction in efficiency is recommended since the unit's efficiency will effectively be infinite until breakthrough is approached.

8 Based on the HLW catalytic oxidizer/reducer datasheet (24590-HLW-MKD-HOP-00019), the NO_x removal efficiency is 95 % (DF = 20).

9 The thermal catalytic oxidizer (TCO) is known to oxidize both carbon monoxide (CO) and sulfur dioxide (SO_2) to carbon dioxide (CO_2) and sulfur trioxide (SO_3), respectively. Per contacts with catalyst vendors, the oxidation efficiency of carbon monoxide tends to be higher then the realized organic destruction efficiency, while the oxidation of sulfur dioxide tends to be less. However, to be conservative, the carbon monoxide conversion DF in the TCO emissions will be assumed to be equal to the organic DF destruction removal efficiency. For SO_2, the vendor recommended an oxidization efficiency of 20 % (DF = 1.2).

10 No gas scrubbing efficiency is assumed.

Table 16 Summary of LAW and HLW Vitrification Offgas Treatment Equipment DFs for Organic COPCs

CAS Registry Number	Compound	Phase f	HLW & LAW Melters a	HLW & LAW Submerged Bed Scrubber b	HLW & LAW WESP b	HLW HEME b	LAW Caustic Scrubber c	All HEPAs (First) d	All HEPAs (Second) d	HLW & LAW Thermal Catalytic Oxidizer e
100-00-5	p-Nitrochlorobenzene	Vapor	1.1	1	1	1	1	1	1	20
100-21-0	p-Phthalic acid	Vapor	1.1	1	1	1	1	1	1	20
100-41-4	Ethyl benzene	Vapor	1.1	1	1	1	1	1	1	20
100-42-5	Styrene	Vapor	1.1	1	1	1	1	1	1	20
10061-01-5	cis-1,3-Dichloropropene	Vapor	1.1	1	1	1	1	1	1	20
10061-02-6	trans-1,3-Dichloropropene	Vapor	1.1	1	1	1	1	1	1	20
101-55-3	4-Bromophenylphenyl ether	Vapor	1.1	1	1	1	1	1	1	20
101-84-8	Diphenyl ether	Vapor	1.1	1	1	1	1	1	1	20
106-35-4	3-Heptanone	Vapor	1.1	1	1	1	1	1	1	20
106-42-3	p-Xylene (Dimethyl benzene)	Vapor	1.1	1	1	1	1	1	1	20
106-46-7	1,4-Dichlorobenzene	Vapor	1.1	1	1	1	1	1	1	20
106-88-7	1,2-Epoxybutane	Vapor	1.1	1	1	1	1	1	1	20
106-93-4	Ethylene dibromide (Dibromethane)	Vapor	1.1	1	1	1	1	1	1	20
106-97-8	Butane	Vapor	1.1	1	1	1	1	1	1	20
106-99-0	1,3-Butadiene	Vapor	1.1	1	1	1	1	1	1	20
107-02-8	Acrolein	Vapor	1.1	1	1	1	1	1	1	20
107-05-1	3-Chloropropene (Allyl chloride)	Vapor	1.1	1	1	1	1	1	1	20
107-06-2	1,2-Dichloroethane (Ethylene chloride)	Vapor	1.1	1	1	1	1	1	1	20
107-12-0	Propionitrile	Vapor	1.1	1	1	1	1	1	1	20
107-13-1	Acrylonitrile	Vapor	1.1	1	1	1	1	1	1	20
107-18-6	2-Propene-1-ol	Vapor	1.1	1	1	1	1	1	1	20
107-31-3	Formic acid, methyl ester	Vapor	1.1	1	1	1	1	1	1	20
107-66-4	Dibutylphosphate	Particle-bound	1.1	1/20	1/20	1/90	1	1/2000	1/100	20
107-87-9	2-Pentanone	Vapor	1.1	1	1	1	1	1	1	20
108-03-2	1-Nitropropane	Vapor	1.1	1	1	1	1	1	1	20
108-05-4	Vinyl acetate	Vapor	1.1	1	1	1	1	1	1	20
108-10-1	Hexone (4-Methyl-2-pentanone or MIBK)	Vapor	1.1	1	1	1	1	1	1	20
108-20-3	Bis(isopropyl)ether	Vapor	1.1	1	1	1	1	1	1	20
108-38-3	m-Xylene (Dimethyl benzene)	Vapor	1.1	1	1	1	1	1	1	20
108-39-4	m-Cresol	Vapor	1.1	1	1	1	1	1	1	20
108-87-2	Methylcyclohexane	Vapor	1.1	1	1	1	1	1	1	20
108-88-3	Toluene	Vapor	1.1	1	1	1	1	1	1	20
108-90-7	Chlorobenzene	Vapor	1.1	1	1	1	1	1	1	20
108-93-0	Cyclohexanol	Vapor	1.1	1	1	1	1	1	1	20
108-94-1	Cyclohexanone	Vapor	1.1	1	1	1	1	1	1	20
108-95-2	Phenol	Vapor	1.1	1	1	1	1	1	1	20
109-66-0	n-Pentane	Vapor	1.1	1	1	1	1	1	1	20
109-99-9	Tetrahydrofuran	Vapor	1.1	1	1	1	1	1	1	20
110-12-3	5-Methyl-2-hexanone	Vapor	1.1	1	1	1	1	1	1	20
110-43-0	2-Heptanone	Vapor	1.1	1	1	1	1	1	1	20
110-54-3	n-Hexane	Vapor	1.1	1	1	1	1	1	1	20
110-62-3	n-Valeraldehyde	Vapor	1.1	1	1	1	1	1	1	20
110-82-7	Cyclohexane	Vapor	1.1	1	1	1	1	1	1	20
110-83-8	Cyclohexene	Vapor	1.1	1	1	1	1	1	1	20
110-86-1	Pyridine	Vapor	1.1	1	1	1	1	1	1	20
111-65-9	n-Octane	Vapor	1.1	1	1	1	1	1	1	20
111-76-2	Ethylene glycol monobutyl ether	Vapor	1.1	1	1	1	1	1	1	20
111-84-2	n-Nonane	Vapor	1.1	1	1	1	1	1	1	20
117-81-7	Bis(2-ethylhexyl)phthalate (DEHP)	Particle-bound	1.1	1/20	1/20	1/90	1	1/2000	1/100	20

Table 16 Summary of LAW and HLW Vitrification Offgas Treatment Equipment DFs for Organic COPCs

CAS Registry Number	Compound	Phase f	HLW & LAW Melters a	HLW & LAW Submerged Bed Scrubber b	HLW & LAW WESP b	HLW HEME b	LAW Caustic Scrubber c	All HEPAs (First) d	All HEPAs (Second) d	HLW & LAW Thermal Catalytic Oxidizer e
117-84-0	n-Dioctyl phthalate	Particle-bound	1.1	1/20	1/20	1/90	1	1/2000	1/100	20
120-12-7	Anthracene	Particle-bound	1.1	1/20	1/20	1/90	1	1/2000	1/100	20
120-82-1	1,2,4-Trichlorobenzene	Vapor	1.1	1	1	1	1	1	1	20
120-83-2	2,4-Dichlorophenol	Vapor	1.1	1	1	1	1	1	1	20
121-44-8	Triethylamine	Vapor	1.1	1	1	1	1	1	1	20
121-69-7	Dimethylaniline	Vapor	1.1	1	1	1	1	1	1	20
122-39-4	N,N-Diphenylamine	Vapor	1.1	1	1	1	1	1	1	20
123-19-3	4-Heptanone	Vapor	1.1	1	1	1	1	1	1	20
123-38-6	n-Propionaldehyde	Vapor	1.1	1	1	1	1	1	1	20
123-51-3	3-Methyl-1-butanol	Vapor	1.1	1	1	1	1	1	1	20
123-86-4	Acetic acid n-butyl ester	Vapor	1.1	1	1	1	1	1	1	20
123-91-1	1,4-Dioxane	Vapor	1.1	1	1	1	1	1	1	20
126-73-8	Tributyl phosphate	Particle-bound	1.1	1/20	1/20	1/90	1	1/2000	1/100	20
126-98-7	2-Methyl-2-propenenitrile (Methacrylonitrile)	Vapor	1.1	1	1	1	1	1	1	20
127-18-4	Perchloroethylene (tetrachloroethylene)	Vapor	1.1	1	1	1	1	1	1	20
127-19-5	N,N-Dimethylacetamide	Vapor	1.1	1	1	1	1	1	1	20
128-37-0	2,6-Bis(tert-butyl)-4-methylphenol	Vapor	1.1	1	1	1	1	1	1	20
129-00-0	Pyrene	Particle-bound	1.1	1/20	1/20	1/90	1	1/2000	1/100	20
1321-64-8	Pentachloronaphthalene	Particle-bound	1.1	1/20	1/20	1/90	1	1/2000	1/100	20
1321-65-9	Trichloronaphthalene	Particle-bound	1.1	1/20	1/20	1/90	1	1/2000	1/100	20
132-64-9	Dibenzofuran	Particle-bound	1.1	1/20	1/20	1/90	1	1/2000	1/100	20
1335-87-1	Hexachloronaphthalene	Particle-bound	1.1	1/20	1/20	1/90	1	1/2000	1/100	20
1335-88-2	Tetrachloronaphthalene	Particle-bound	1.1	1/20	1/20	1/90	1	1/2000	1/100	20
1336-36-3	Polychlorinated biphenyls (PCBs)	Vapor	1.1	1	1	1	1	1	1	20
141-78-6	Acetic acid ethyl ester (Ethyl acetate)	Vapor	1.1	1	1	1	1	1	1	20
141-79-7	4-Methyl-3-penten-2-one	Vapor	1.1	1	1	1	1	1	1	20
142-82-5	n-Heptane	Vapor	1.1	1	1	1	1	1	1	20
144-62-7	Oxalic acid	Vapor	1.1	1	1	1	1	1	1	20
156-60-5	trans-1,2-Dichloroethylene	Vapor	1.1	1	1	1	1	1	1	20
1634-04-4	Methyl tert-butyl ether	Vapor	1.1	1	1	1	1	1	1	20
189-55-9	Dibenzo[a,i]pyrene	Particle	1.1	20	20	90	1	2000	100	20
189-64-0	Dibenzo[a,h]pyrene	Particle	1.1	20	20	90	1	2000	100	20
191-24-2	Benzo(g,h,i)perylene	Particle-bound	1.1	1/20	1/20	1/90	1	1/2000	1/100	20
191-30-0	Benzo[a,i]pyrene	Particle	1.1	20	20	90	1	2000	100	20
192-65-4	Dibenzo[a,e]pyrene	Particle	1.1	20	20	90	1	2000	100	20
193-39-5	Indeno(1,2,3-cd)pyrene	Particle	1.1	20	20	90	1	2000	100	20
206-44-0	Fluoranthene	Particle-bound	1.1	1/20	1/20	1/90	1	1/2000	1/100	20
208-96-8	Acenaphthylene	Vapor	1.1	1	1	1	1	1	1	20
2234-13-1	Octachloronaphthalene	Particle-bound	1.1	1/20	1/20	1/90	1	1/2000	1/100	20
224-42-0	Dibenz[a,j]acridine	Particle-bound	1.1	1/20	1/20	1/90	1	1/2000	1/100	20
226-36-8	Dibenz[a,h]acridine	Particle-bound	1.1	1/20	1/20	1/90	1	1/2000	1/100	20
25551-13-7	Trimethyl benzene	Vapor	1.1	1	1	1	1	1	1	20
26140-60-3	Terphenyls	Particle-bound	1.1	1/20	1/20	1/90	1	1/2000	1/100	20
27154-33-2	Trichlorofluoroethane	Vapor	1.1	1	1	1	1	1	1	20
287-92-3	Cyclopentane	Vapor	1.1	1	1	1	1	1	1	20
3697-24-3	5-Methylchrysene	Particle-bound	1.1	1/20	1/20	1/90	1	1/2000	1/100	20
3825-26-1	Ammonium perfluorooctanoate	Vapor	1.1	1	1	1	1	1	1	20
4170-30-3	2-Butenaldehyde (2-Butenal)	Vapor	1.1	1	1	1	1	1	1	20
50-00-0	Formaldehyde	Vapor	1.1	1	1	1	1	1	1	20

Table 16 Summary of LAW and HLW Vitrification Offgas Treatment Equipment DFs for Organic COPCs

CAS Registry Number	Compound	Phase f	HLW & LAW Melters a	HLW & LAW Submerged Bed Scrubber b	HLW & LAW WESP b	HLW HEME b	LAW Caustic Scrubber c	All HEPAs (First) d	All HEPAs (Second) d	HLW & LAW Thermal Catalytic Oxidizer e
50-32-8	Benzo(a)pyrene	Particle-bound	1.1	1/20	1/20	1/90	1	1/2000	1/100	20
53-70-3	Dibenzo(a,h)anthracene	Particle-bound	1.1	1/20	1/20	1/90	1	1/2000	1/100	20
540-59-0	1,2-Dichloroethylene	Vapor	1.1	1	1	1	1	1	1	20
540-84-1	2,2,4-Trimethylpentane	Vapor	1.1	1	1	1	1	1	1	20
541-73-1	1,3-Dichlorobenzene	Vapor	1.1	1	1	1	1	1	1	20
56-23-5	Carbon tetrachloride	Vapor	1.1	1	1	1	1	1	1	20
563-80-4	3-Methyl-2-butanone	Vapor	1.1	1	1	1	1	1	1	20
56-49-5	3-Methylcholanthrene	Particle-bound	1.1	1/20	1/20	1/90	1	1/2000	1/100	20
57-14-7	1,1-Dimethylhydrazine	Vapor	1.1	1	1	1	1	1	1	20
58-90-2	2,3,4,6-Tetrachlorophenol	Vapor	1.1	1	1	1	1	1	1	20
591-78-6	2-Hexanone	Vapor	1.1	1	1	1	1	1	1	20
59-50-7	4-Chloro-3-methylphenol	Vapor	1.1	1	1	1	1	1	1	20
59-89-2	N-Nitrosomorpholine	Vapor	1.1	1	1	1	1	1	1	20
602-87-9	5-Nitroacenaphthene	Particle-bound	1.1	1/20	1/20	1/90	1	1/2000	1/100	20
60-29-7	Ethyl ether	Vapor	1.1	1	1	1	1	1	1	20
603-34-9	Triphenylamine	Vapor	1.1	1	1	1	1	1	1	20
60-34-4	Methylhydrazine	Vapor	1.1	1	1	1	1	1	1	20
60-35-5	Acetamide	Vapor	1.1	1	1	1	1	1	1	20
621-64-7	Di-n-Propylnitrosamine	Vapor	1.1	1	1	1	1	1	1	20
624-83-9	Methyl isocyanate	Vapor	1.1	1	1	1	1	1	1	20
627-13-4	Nitric acid, propyl ester	Vapor	1.1	1	1	1	1	1	1	20
62-75-9	N-Nitroso-N,N-dimethylamine	Vapor	1.1	1	1	1	1	1	1	20
630-20-6	1,1,1,2-Tetrachloroethane	Vapor	1.1	1	1	1	1	1	1	20
64-17-5	Ethyl alcohol	Vapor	1.1	1	1	1	1	1	1	20
64-18-6	Formic acid	Vapor	1.1	1	1	1	1	1	1	20
64-19-7	Acetic acid	Vapor	1.1	1	1	1	1	1	1	20
67-56-1	Methyl alcohol (Methanol)	Vapor	1.1	1	1	1	1	1	1	20
67-63-0	2-Propyl alcohol (Isopropanol)	Vapor	1.1	1	1	1	1	1	1	20
67-64-1	2-Propanone (Acetone)	Vapor	1.1	1	1	1	1	1	1	20
67-66-3	Chloroform	Vapor	1.1	1	1	1	1	1	1	20
67-72-1	Hexachloroethane	Vapor	1.1	1	1	1	1	1	1	20
684-16-2	Hexafluoroacetone	Vapor	1.1	1	1	1	1	1	1	20
71-23-8	n-Propyl alcohol	Vapor	1.1	1	1	1	1	1	1	20
71-36-3	n-Butyl alcohol	Vapor	1.1	1	1	1	1	1	1	20
71-43-2	Benzene	Vapor	1.1	1	1	1	1	1	1	20
71-55-6	Methyl chloroform (1,1,1-Trichloroethane)	Vapor	1.1	1	1	1	1	1	1	20
74-83-9	Bromomethane (Methyl bromide)	Vapor	1.1	1	1	1	1	1	1	20
74-87-3	Chloromethane (Methyl chloride)	Vapor	1.1	1	1	1	1	1	1	20
74-97-5	Bromochloromethane	Vapor	1.1	1	1	1	1	1	1	20
74-99-7	Methylacetylene	Vapor	1.1	1	1	1	1	1	1	20
75-00-3	Chloroethane	Vapor	1.1	1	1	1	1	1	1	20
75-01-4	Vinyl chloride (1-Chloroethene)	Vapor	1.1	1	1	1	1	1	1	20
75-05-8	Acetonitrile	Vapor	1.1	1	1	1	1	1	1	20
75-07-0	Acetaldehyde	Vapor	1.1	1	1	1	1	1	1	20
75-09-2	Dichloromethane (Methylene chloride)	Vapor	1.1	1	1	1	1	1	1	20
75-12-7	Formamide	Vapor	1.1	1	1	1	1	1	1	20
75-15-0	Carbon disulfide	Vapor	1.1	1	1	1	1	1	1	20
75-21-8	Ethylene oxide (Oxirane)	Vapor	1.1	1	1	1	1	1	1	20
75-27-4	Bromodichloromethane	Vapor	1.1	1	1	1	1	1	1	20

Table 16 Summary of LAW and HLW Vitrification Offgas Treatment Equipment DFs for Organic COPCs

CAS Registry Number	Compound	Phase f	HLW & LAW Melters a	HLW & LAW Submerged Bed Scrubber b	HLW & LAW WESP b	HLW HEME b	LAW Caustic Scrubber c	All HEPAs (First) d	All HEPAs (Second) d	HLW & LAW Thermal Catalytic Oxidizer e
75-34-3	1,1-Dichloroethane	Vapor	1.1	1	1	1	1	1	1	20
75-35-4	1,1-Dichloroethene (Vinylidene chloride)	Vapor	1.1	1	1	1	1	1	1	20
75-43-4	Dichlorofluoromethane	Vapor	1.1	1	1	1	1	1	1	20
75-45-6	Chlorodifluoromethane	Vapor	1.1	1	1	1	1	1	1	20
75-50-3	Trimethylamine	Vapor	1.1	1	1	1	1	1	1	20
75-52-5	Nitromethane	Vapor	1.1	1	1	1	1	1	1	20
75-55-8	2-Methylaziridine	Vapor	1.1	1	1	1	1	1	1	20
75-61-6	Difluorodibromomethane	Vapor	1.1	1	1	1	1	1	1	20
75-63-8	Trifluorobromomethane	Vapor	1.1	1	1	1	1	1	1	20
75-65-0	2-Methyl-2-propanol	Vapor	1.1	1	1	1	1	1	1	20
75-69-4	Trichlorofluoromethane	Vapor	1.1	1	1	1	1	1	1	20
75-71-8	Dichlorodifluoromethane	Vapor	1.1	1	1	1	1	1	1	20
76-03-9	Trichloroacetic acid	Vapor	1.1	1	1	1	1	1	1	20
76-11-9	1,1,1,2-Tetrachloro-2,2-difluoroethane	Vapor	1.1	1	1	1	1	1	1	20
76-12-0	1,1,2,2-Tetrachloro-1,2-difluoroethane	Vapor	1.1	1	1	1	1	1	1	20
76-13-1	1,2,2-Trichloro-1,1,2-trifluoroethane (Freon 113)	Vapor	1.1	1	1	1	1	1	1	20
76-14-2	1,2-Dichloro-1,1,2,2-tetrafluoroethane	Vapor	1.1	1	1	1	1	1	1	20
76-15-3	Chloropentafluoroethane	Vapor	1.1	1	1	1	1	1	1	20
78-83-1	2-Methylpropyl alcohol (Isobutyl alcohol)	Vapor	1.1	1	1	1	1	1	1	20
78-87-5	1,2-Dichloropropane	Vapor	1.1	1	1	1	1	1	1	20
78-92-2	1-Methylpropyl alcohol (2-Butanol)	Vapor	1.1	1	1	1	1	1	1	20
78-93-3	Methyl ethyl ketone (MEK, 2-Butanone)	Vapor	1.1	1	1	1	1	1	1	20
79-00-5	1,1,2-Trichloroethane	Vapor	1.1	1	1	1	1	1	1	20
79-01-6	Trichloroethylene	Vapor	1.1	1	1	1	1	1	1	20
79-09-4	Propionic acid	Vapor	1.1	1	1	1	1	1	1	20
79-10-7	2-Propenoic acid	Vapor	1.1	1	1	1	1	1	1	20
79-20-9	Methyl acetate	Vapor	1.1	1	1	1	1	1	1	20
79-34-5	1,1,2,2-Tetrachloroethane	Vapor	1.1	1	1	1	1	1	1	20
83-32-9	Acenaphthene	Vapor	1.1	1	1	1	1	1	1	20
84-66-2	Diethyl phthalate	Vapor	1.1	1	1	1	1	1	1	20
84-74-2	Dibutyl phthalate	Particle-bound	1.1	1/20	1/20	1/90	1	1/2000	1/100	20
85-01-8	Phenanthrene	Particle-bound	1.1	1/20	1/20	1/90	1	1/2000	1/100	20
85-68-7	Butylbenzyl phthalate	Particle-bound	1.1	1/20	1/20	1/90	1	1/2000	1/100	20
86-73-7	Fluorene	Vapor	1.1	1	1	1	1	1	1	20
87-68-3	Hexachlorobutadiene	Vapor	1.1	1	1	1	1	1	1	20
88-06-2	2,4,6-Trichlorophenol	Vapor	1.1	1	1	1	1	1	1	20
88-72-2	2-Nitrotoluene	Vapor	1.1	1	1	1	1	1	1	20
88-75-5	2-Nitrophenol	Vapor	1.1	1	1	1	1	1	1	20
88-89-1	Picric acid	Particle-bound	1.1	1/20	1/20	1/90	1	1/2000	1/100	20
91-20-3	Naphthalene	Vapor	1.1	1	1	1	1	1	1	20
91-22-5	Quinoline	Vapor	1.1	1	1	1	1	1	1	20
91-58-7	2-Chloronapthalene	Vapor	1.1	1	1	1	1	1	1	20
92-52-4	1,1`-Biphenyl	Vapor	1.1	1	1	1	1	1	1	20
92-93-3	4-Nitrobiphenyl	Particle-bound	1.1	1/20	1/20	1/90	1	1/2000	1/100	20
95-13-6	Indene	Vapor	1.1	1	1	1	1	1	1	20
95-47-6	o-Xylene	Vapor	1.1	1	1	1	1	1	1	20
95-48-7	o-Cresol (2-Methylphenol)	Vapor	1.1	1	1	1	1	1	1	20
95-49-8	2-Chlorotoluene	Vapor	1.1	1	1	1	1	1	1	20
95-50-1	o-Dichlorobenzene (1,2-Dichlorobenzene)	Vapor	1.1	1	1	1	1	1	1	20

Table 16 Summary of LAW and HLW Vitrification Offgas Treatment Equipment DFs for Organic COPCs

CAS Registry Number	Compound	Phase f	HLW & LAW Melters a	HLW & LAW Submerged Bed Scrubber b	HLW & LAW WESP b	HLW HEME b	LAW Caustic Scrubber c	All HEPAs (First) d	All HEPAs (Second) d	HLW & LAW Thermal Catalytic Oxidizer e
95-57-8	2-Chlorophenol	Vapor	1.1	1	1	1	1	1	1	20
95-95-4	2,4,5-Trichlorophenol	Vapor	1.1	1	1	1	1	1	1	20
96-22-0	3-Pentanone	Vapor	1.1	1	1	1	1	1	1	20
96-69-5	Bis(3-tert-butyl-4-hydroxy-6-methyl-phenyl)sulfide	Vapor	1.1	1	1	1	1	1	1	20
98-51-1	p-tert-Butyltoluene	Vapor	1.1	1	1	1	1	1	1	20
98-82-8	Cumene	Vapor	1.1	1	1	1	1	1	1	20
98-83-9	alpha-Methylstyrene	Vapor	1.1	1	1	1	1	1	1	20
98-86-2	Acetophenone	Vapor	1.1	1	1	1	1	1	1	20
98-95-3	Nitrobenzene	Vapor	1.1	1	1	1	1	1	1	20

a Per the *Final Report Integrated Off-Gas System Tests on the DM-1200 Melter with RPP-WTP LAW Sub-Envelope A1 Simulants* (24590-101-TSA-W000-0009-111-02) and *Final Report Integrated Off-Gas System Test on the DM-1200 Melter with RPP-WTP LAW Sub-Envelope C1 Simulants (24590-101-TSA-W000-0009-111-01)*, the DM-1200 melter organic DRE ranged from 0 % to 33 % for Envelope A and 42 % to 57 % for Envelope C. Because of the observed inefficient destruction efficiency in the DM-1200 melter, a combined VOC/SVOC DRE of 10 % (DF=1.1) for both the HLW and LAW melters is recommended.

b Miscellaneous anion species and nonvolatile organics are defined with the average cation DF due to various speciation potentials.

c The LAW caustic scrubber is assumed to have a particulate scrubbing efficiency DF of 1.

d Based on the *Best Available Radionuclide Control Technology Analysis for the WTP*, 24590-WTP-RPT-ENV-01-004, Rev 1.

e Per the VSL report *Final Report Off-Line Tests of the DM-1200 Thermal Catalytic Oxidation (TCO) Unit* (24590-101-TSA-W000-0009-87-09), the TCO can achieve a DRE of >99 % if the offgas residence time exceeds 0.4 seconds. If the residence time drops to 0.15 seconds, a DRE of ~95 % would be expected. No difference in efficiency was observed between SVOCs and VOCs. Preliminary TCO information (based on early vendor contacts) provided residence times between 0.05 and 0.1 seconds. There is also concern that the TCO units will lose efficiency over time due to poisoning. Therefore, a VOC/SVOC DRE of 90 % was initially recommended for the facility emissions report. However, per E&NS management direction, a 95 % organic DRE abatement efficiency is to be used for emissions modeling.

f Particle bound constituents have both vapor and particle DFs. The amount of the constituents in each phase is determined by the constituents F_v values.

Table 17 Summary of Organic Constituents Emission Rates for the WTP

CAS #	COPC	Feed	Unabated Streams					Abated Streams				
		FRP01 + FRP14	PVP01	PJV04	LMP06	HMP06	PJV32	PVP12	PJV11	LVP18	HOP31	PJV34
		WTP Feed	PT Vessel Vent	PT RFD/PJM	LAW Melter	HLW Melter	HLW PJM/RFD	PT Vessel Vent	PT RFD/PJM	LAW Melter	HLW Melter	HLW PJM/RFD
		g/sec	g/sec	g/sec	g/sec	g/sec	g/sec	g/sec	g/sec	g/sec	g/sec	g/sec
100-00-5	p-Nitrochlorobenzene	2.86E-02	1.55E-02	2.20E-08	4.26E-04	8.68E-05	5.65E-11	3.10E-07	2.20E-08	2.17E-05	4.49E-06	5.65E-11
100-21-0	p-Phthalic acid	4.29E-02	2.38E-09	1.90E-07	4.14E-01	2.28E-03	1.43E-09	2.38E-12	1.90E-07	2.07E-02	1.14E-04	1.43E-09
100-41-4	Ethyl benzene	2.86E-03	2.86E-03	1.66E-09	0.00E+00	0.00E+00	0.00E+00	2.86E-07	1.66E-09	0.00E+00	0.00E+00	0.00E+00
100-42-5	Styrene	2.86E-03	2.86E-03	1.66E-09	0.00E+00	0.00E+00	0.00E+00	2.86E-07	1.66E-09	0.00E+00	5.21E-15	0.00E+00
10061-01-5	cis-1,3-Dichloropropene	2.86E-03	2.85E-03	1.66E-09	0.00E+00	1.51E-15	0.00E+00	2.85E-05	1.66E-09	0.00E+00	1.49E-14	0.00E+00
10061-02-6	trans-1,3-Dichloropropene	2.86E-03	2.83E-03	1.67E-09	0.00E+00	6.76E-14	0.00E+00	5.65E-05	1.67E-09	1.02E-15	2.08E-13	0.00E+00
101-55-3	4-Bromophenylphenyl ether	4.29E-02	3.49E-02	2.69E-08	4.33E-08	4.07E-08	0.00E+00	2.09E-04	2.69E-08	3.24E-09	4.97E-09	0.00E+00
101-84-8	Diphenyl ether	7.14E-03	6.98E-03	4.21E-09	2.72E-13	1.22E-12	0.00E+00	2.79E-05	4.21E-09	1.25E-13	2.03E-12	0.00E+00
106-35-4	3-Heptanone	2.86E-03	2.33E-03	1.79E-09	2.88E-09	2.72E-09	0.00E+00	2.33E-07	1.79E-09	2.16E-10	3.31E-10	0.00E+00
106-42-3	p-Xylene (Dimethyl benzene)	7.14E-03	7.15E-03	4.15E-09	0.00E+00	1.28E-15	0.00E+00	7.15E-06	4.15E-09	0.00E+00	1.31E-14	0.00E+00
106-46-7	1,4-Dichlorobenzene	2.86E-03	2.79E-03	1.68E-09	0.00E+00	4.89E-13	0.00E+00	2.79E-05	1.68E-09	4.90E-15	8.13E-13	0.00E+00
106-88-7	1,2-Epoxybutane	7.14E-03	6.33E-03	4.36E-09	4.38E-10	6.95E-10	0.00E+00	6.33E-07	4.36E-09	4.42E-11	1.46E-10	0.00E+00
106-93-4	Ethylene dibromide (Dibromethane)	2.86E-03	2.72E-03	1.70E-09	4.42E-13	3.60E-12	0.00E+00	2.72E-04	1.70E-09	1.21E-13	3.22E-12	0.00E+00
106-97-8	Butane	7.14E-03	7.16E-03	4.14E-09	0.00E+00	0.00E+00	0.00E+00	7.16E-07	4.14E-09	0.00E+00	0.00E+00	0.00E+00
106-99-0	1,3-Butadiene	2.86E-03	2.86E-03	1.66E-09	0.00E+00	0.00E+00	0.00E+00	2.86E-07	1.66E-09	0.00E+00	0.00E+00	0.00E+00
107-02-8	Acrolein	7.14E-03	5.82E-03	4.48E-09	7.21E-09	6.79E-09	0.00E+00	5.82E-07	4.48E-09	5.40E-10	8.28E-10	0.00E+00
107-05-1	3-Chloropropene (Allyl chloride)	2.86E-03	2.86E-03	1.66E-09	0.00E+00	0.00E+00	0.00E+00	2.86E-07	1.66E-09	0.00E+00	0.00E+00	0.00E+00
107-06-2	1,2-Dichloroethane (Ethylene chloride)	2.86E-03	2.83E-03	1.67E-09	0.00E+00	6.76E-14	0.00E+00	2.83E-07	1.67E-09	1.02E-15	2.08E-13	0.00E+00
107-12-0	Propionitrile	7.14E-03	2.97E-03	5.17E-09	5.34E-07	2.75E-07	6.21E-14	2.97E-07	5.17E-09	3.11E-08	1.97E-08	6.21E-14
107-13-1	Acrylonitrile	1.43E-02	1.16E-02	8.95E-09	1.44E-08	1.36E-08	0.00E+00	1.16E-06	8.95E-09	1.08E-09	1.66E-09	0.00E+00
107-18-6	2-Propene-1-ol	4.29E-02	2.33E-02	3.30E-08	6.40E-04	1.30E-04	8.48E-11	2.33E-06	3.30E-08	3.25E-05	6.73E-06	8.48E-11
107-31-3	Formic acid, methyl ester	4.29E-02	3.80E-02	2.61E-08	2.63E-09	4.17E-09	0.00E+00	3.80E-06	2.61E-08	2.65E-10	8.78E-10	0.00E+00
107-66-4	Dibutylphosphate	4.29E-02	5.07E-05	6.77E-08	3.56E-02	2.17E-03	0.00E+00	5.05E-09	6.74E-08	1.76E-03	1.07E-04	0.00E+00
107-87-9	2-Pentanone	1.43E-02	1.16E-02	8.95E-09	1.44E-08	1.36E-08	0.00E+00	1.16E-06	8.95E-09	1.08E-09	1.66E-09	0.00E+00
108-03-2	1-Nitropropane	4.29E-02	3.49E-02	2.69E-08	4.33E-08	4.07E-08	0.00E+00	3.49E-06	2.69E-08	3.24E-09	4.97E-09	0.00E+00
108-05-4	Vinyl acetate	4.29E-02	4.06E-02	2.56E-08	3.57E-11	1.50E-10	0.00E+00	4.06E-06	2.56E-08	6.63E-12	8.39E-11	0.00E+00
108-10-1	Hexone (4-Methyl-2-pentanone or MIBK)	7.14E-03	5.82E-03	4.48E-09	7.21E-09	6.79E-09	0.00E+00	5.82E-07	4.48E-09	5.40E-10	8.28E-10	0.00E+00
108-20-3	Bis(isopropyl)ether	7.14E-03	6.97E-03	4.21E-09	0.00E+00	1.22E-12	0.00E+00	6.97E-07	4.21E-09	1.22E-14	2.03E-12	0.00E+00
108-38-3	m-Xylene (Dimethyl benzene)	7.14E-03	7.15E-03	4.15E-09	0.00E+00	1.28E-15	0.00E+00	7.15E-06	4.15E-09	0.00E+00	1.31E-14	0.00E+00
108-39-4	m-Cresol	7.14E-03	6.00E-04	7.44E-09	4.99E-04	9.71E-05	0.00E+00	3.00E-07	7.44E-09	2.51E-05	4.94E-06	0.00E+00
108-87-2	Methylcyclohexane	7.14E-03	7.17E-03	4.15E-09	0.00E+00	0.00E+00	0.00E+00	7.17E-07	4.15E-09	0.00E+00	0.00E+00	0.00E+00
108-88-3	Toluene	2.86E-03	2.86E-03	1.66E-09	0.00E+00	0.00E+00	0.00E+00	2.86E-07	1.66E-09	0.00E+00	0.00E+00	0.00E+00
108-90-7	Chlorobenzene	2.86E-03	2.86E-03	1.66E-09	0.00E+00	0.00E+00	0.00E+00	2.86E-05	1.66E-09	0.00E+00	5.21E-15	0.00E+00
108-93-0	Cyclohexanol	7.14E-03	3.88E-03	5.49E-09	1.07E-04	2.17E-05	1.41E-11	1.94E-07	5.49E-09	5.42E-06	1.12E-06	1.41E-11
108-94-1	Cyclohexanone	7.14E-03	1.24E-03	5.88E-09	2.24E-05	7.17E-06	0.00E+00	6.20E-08	5.88E-09	1.16E-06	3.93E-07	0.00E+00
108-95-2	Phenol	4.29E-02	1.31E-03	5.94E-08	1.78E-02	1.95E-03	0.00E+00	6.56E-06	5.94E-08	8.93E-04	9.80E-05	0.00E+00
109-66-0	n-Pentane	7.14E-03	7.16E-03	4.14E-09	0.00E+00	0.00E+00	0.00E+00	7.16E-07	4.14E-09	0.00E+00	0.00E+00	0.00E+00
109-99-9	Tetrahydrofuran	2.86E-03	1.19E-03	2.07E-09	2.14E-07	1.10E-07	2.48E-14	1.19E-07	2.07E-09	1.25E-08	7.87E-09	2.48E-14
110-12-3	5-Methyl-2-hexanone	2.86E-03	2.53E-03	1.74E-09	1.75E-10	2.78E-10	0.00E+00	2.53E-07	1.74E-09	1.77E-11	5.85E-11	0.00E+00
110-43-0	2-Heptanone	2.86E-03	2.53E-03	1.74E-09	1.75E-10	2.78E-10	0.00E+00	2.53E-07	1.74E-09	1.77E-11	5.85E-11	0.00E+00

Table 17 Summary of Organic Constituents Emission Rates for the WTP

CAS #	COPC	Feed	Unabated Streams					Abated Streams				
		FRP01 + FRP14	PVP01	PJV04	LMP06	HMP06	PJV32	PVP12	PJV11	LVP18	HOP31	PJV34
		WTP Feed	PT Vessel Vent	PT RFD/PJM	LAW Melter	HLW Melter	HLW PJM/RFD	PT Vessel Vent	PT RFD/PJM	LAW Melter	HLW Melter	HLW PJM/RFD
		g/sec	g/sec	g/sec	g/sec	g/sec	g/sec	g/sec	g/sec	g/sec	g/sec	g/sec
110-54-3	n-Hexane	7.14E-03	7.16E-03	4.14E-09	0.00E+00	0.00E+00	0.00E+00	7.16E-07	4.14E-09	0.00E+00	0.00E+00	0.00E+00
110-62-3	n-Valeraldehyde	4.29E-02	3.80E-02	2.61E-08	2.63E-09	4.17E-09	0.00E+00	3.80E-06	2.61E-08	2.65E-10	8.78E-10	0.00E+00
110-82-7	Cyclohexane	7.14E-03	7.17E-03	4.15E-09	0.00E+00	0.00E+00	0.00E+00	7.17E-07	4.15E-09	0.00E+00	0.00E+00	0.00E+00
110-83-8	Cyclohexene	2.86E-03	2.86E-03	1.66E-09	0.00E+00	0.00E+00	0.00E+00	2.86E-07	1.66E-09	0.00E+00	0.00E+00	0.00E+00
110-86-1	Pyridine	1.43E-02	2.48E-03	1.18E-08	4.49E-05	1.43E-05	0.00E+00	2.48E-07	1.18E-08	2.33E-06	7.87E-07	0.00E+00
111-65-9	n-Octane	7.14E-03	7.16E-03	4.14E-09	0.00E+00	0.00E+00	0.00E+00	7.16E-07	4.14E-09	0.00E+00	0.00E+00	0.00E+00
111-76-2	Ethylene glycol monobutyl ether	4.29E-02	3.60E-03	4.47E-08	3.00E-03	5.83E-04	0.00E+00	1.80E-07	4.47E-08	1.51E-04	2.97E-05	0.00E+00
111-84-2	n-Nonane	7.14E-03	7.16E-03	4.14E-09	0.00E+00	0.00E+00	0.00E+00	3.58E-07	4.14E-09	0.00E+00	0.00E+00	0.00E+00
117-81-7	Bis(2-ethylhexyl)phthalate (DEHP)	4.29E-02	1.48E-01	7.17E-08	1.86E-02	1.25E-03	7.93E-10	3.84E-07	9.32E-09	1.63E-05	1.11E-06	1.03E-10
117-84-0	n-Dioctyl phthalate	4.29E-02	2.38E-02	3.15E-08	2.23E-04	6.06E-05	4.08E-11	4.05E-07	2.68E-08	8.29E-06	2.34E-06	3.47E-11
120-12-7	Anthracene	4.29E-02	2.02E-02	3.04E-08	1.19E-06	7.26E-07	7.45E-13	4.02E-06	3.03E-08	7.56E-08	5.90E-08	7.44E-13
120-82-1	1,2,4-Trichlorobenzene	7.14E-03	7.07E-03	4.18E-09	0.00E+00	1.69E-13	0.00E+00	1.41E-05	4.18E-09	2.55E-15	5.20E-13	0.00E+00
120-83-2	2,4-Dichlorophenol	4.29E-02	2.33E-02	3.30E-08	6.40E-04	1.30E-04	8.48E-11	1.40E-04	3.30E-08	3.25E-05	6.73E-06	8.48E-11
121-44-8	Triethylamine	7.14E-03	6.33E-03	4.36E-09	4.38E-10	6.95E-10	0.00E+00	6.33E-07	4.36E-09	4.42E-11	1.46E-10	0.00E+00
121-69-7	Dimethylaniline	7.14E-03	2.97E-03	5.17E-09	5.34E-07	2.75E-07	6.21E-14	1.49E-07	5.17E-09	3.11E-08	1.97E-08	6.21E-14
122-39-4	N,N-Diphenylamine	1.43E-02	1.57E-03	1.36E-08	4.26E-04	8.68E-05	5.65E-11	6.27E-06	1.36E-08	2.17E-05	4.49E-06	5.65E-11
123-19-3	4-Heptanone	2.86E-03	1.19E-03	2.07E-09	2.14E-07	1.10E-07	2.48E-14	1.19E-07	2.07E-09	1.25E-08	7.87E-09	2.48E-14
123-38-6	n-Propionaldehyde	1.43E-02	1.16E-02	8.95E-09	1.44E-08	1.36E-08	0.00E+00	1.16E-06	8.95E-09	1.08E-09	1.66E-09	0.00E+00
123-51-3	3-Methyl-1-butanol	7.14E-03	1.42E-03	5.73E-09	1.23E-05	4.26E-06	0.00E+00	1.42E-07	5.73E-09	6.48E-07	2.40E-07	0.00E+00
123-86-4	Acetic acid n-butyl ester	1.35E-04	1.28E-04	8.06E-11	1.13E-13	4.72E-13	0.00E+00	1.28E-08	8.06E-11	2.09E-14	2.65E-13	0.00E+00
123-91-1	1,4-Dioxane	1.43E-03	7.76E-04	1.10E-09	2.13E-05	4.34E-06	2.83E-12	7.76E-08	1.10E-09	1.08E-06	2.24E-07	2.83E-12
126-73-8	Tributyl phosphate	2.86E-02	4.56E-04	4.43E-08	1.81E-02	1.51E-03	9.66E-10	9.08E-09	4.42E-08	8.96E-04	7.51E-05	9.62E-10
126-98-7	2-Methyl-2-propenenitrile (Methacrylonitrile)	7.14E-03	6.77E-03	4.26E-09	5.95E-12	2.49E-11	0.00E+00	6.77E-07	4.26E-09	1.10E-12	1.40E-11	0.00E+00
127-18-4	Perchloroethylene (tetrachloroethylene)	2.86E-03	2.86E-03	1.66E-09	0.00E+00	0.00E+00	0.00E+00	2.86E-04	1.66E-09	0.00E+00	0.00E+00	0.00E+00
127-19-5	N,N-Dimethylacetamide	7.14E-03	8.46E-06	1.13E-08	5.93E-03	3.61E-04	0.00E+00	8.46E-10	1.13E-08	2.97E-04	1.81E-05	0.00E+00
128-37-0	2,6-Bis(tert-butyl)-4-methylphenol	1.43E-02	7.93E-03	1.05E-08	7.43E-05	2.02E-05	1.36E-11	1.59E-07	1.05E-08	3.79E-06	1.07E-06	1.36E-11
129-00-0	Pyrene	4.29E-02	9.35E-03	3.79E-08	1.06E-04	3.46E-05	2.45E-11	5.57E-05	3.77E-08	5.56E-06	1.92E-06	2.43E-11
1321-64-8	Pentachloronaphthalene	4.29E-02	4.19E-02	2.53E-08	2.76E-12	7.35E-12	0.00E+00	2.44E-04	2.45E-08	1.23E-12	1.19E-11	0.00E+00
1321-65-9	Trichloronaphthalene	4.29E-02	3.80E-02	2.61E-08	2.63E-09	4.17E-09	0.00E+00	2.28E-04	2.61E-08	2.65E-10	8.76E-10	0.00E+00
132-64-9	Dibenzofuran	4.29E-02	3.41E-02	2.71E-08	5.25E-09	8.33E-09	0.00E+00	2.05E-04	2.70E-08	5.29E-10	1.74E-09	0.00E+00
1335-87-1	Hexachloronaphthalene	4.29E-02	3.49E-02	2.69E-08	4.33E-08	4.07E-08	0.00E+00	2.06E-04	2.64E-08	3.16E-09	4.86E-09	0.00E+00
1335-88-2	Tetrachloronaphthalene	4.29E-02	3.80E-02	2.61E-08	2.63E-09	4.17E-09	0.00E+00	2.26E-04	2.59E-08	2.62E-10	8.68E-10	0.00E+00
1336-36-3	Polychlorinated biphenyls (PCBs)	1.74E-03	4.26E-03	1.36E-09	5.82E-11	2.08E-10	1.20E-15	2.56E-05	1.36E-09	1.02E-11	9.47E-11	1.20E-15
141-78-6	Acetic acid ethyl ester (Ethyl acetate)	1.35E-04	1.10E-04	8.48E-11	1.37E-10	1.29E-10	0.00E+00	1.10E-08	8.48E-11	1.02E-11	1.57E-11	0.00E+00
141-79-7	4-Methyl-3-penten-2-one	4.29E-02	1.78E-02	3.10E-08	3.20E-06	1.65E-06	3.73E-13	1.78E-06	3.10E-08	1.87E-07	1.18E-07	3.73E-13
142-82-5	n-Heptane	7.14E-03	7.16E-03	4.14E-09	0.00E+00	0.00E+00	0.00E+00	7.16E-07	4.14E-09	0.00E+00	0.00E+00	0.00E+00
144-62-7	Oxalic acid	2.14E+00	3.27E-05	3.41E-06	1.83E+00	1.08E-01	0.00E+00	1.63E-07	3.41E-06	9.16E-02	5.40E-03	0.00E+00
156-60-5	trans-1,2-Dichloroethylene	7.14E-03	7.15E-03	4.14E-09	0.00E+00	0.00E+00	0.00E+00	7.15E-07	4.14E-09	0.00E+00	0.00E+00	0.00E+00
1634-04-4	Methyl tert-butyl ether	7.14E-03	6.77E-03	4.26E-09	5.95E-12	2.49E-11	0.00E+00	6.77E-07	4.26E-09	1.10E-12	1.40E-11	0.00E+00
189-55-9	Dibenzo[a,i]pyrene	4.29E-02	5.07E-05	6.77E-08	3.56E-02	2.17E-03	0.00E+00	2.31E-15	6.77E-14	2.26E-11	1.57E-14	0.00E+00

Table 17 Summary of Organic Constituents Emission Rates for the WTP

CAS #	COPC	Feed	Unabated Streams					Abated Streams				
		FRP01 + FRP14	PVP01	PJV04	LMP06	HMP06	PJV32	PVP12	PJV11	LVP18	HOP31	PJV34
		WTP Feed	PT Vessel Vent	PT RFD/PJM	LAW Melter	HLW Melter	HLW PJM/RFD	PT Vessel Vent	PT RFD/PJM	LAW Melter	HLW Melter	HLW PJM/RFD
		g/sec	g/sec	g/sec	g/sec	g/sec	g/sec	g/sec	g/sec	g/sec	g/sec	g/sec
189-64-0	Dibenzo[a,h]pyrene	4.29E-02	5.07E-05	6.77E-08	3.56E-02	2.17E-03	0.00E+00	2.31E-15	6.77E-14	2.26E-11	1.57E-14	0.00E+00
191-24-2	Benzo(g,h,i)perylene	4.29E-02	1.48E-01	7.17E-08	1.86E-02	1.25E-03	7.93E-10	5.75E-05	4.66E-09	4.21E-06	2.93E-07	5.15E-11
191-30-0	Benzo[a,i]pyrene	4.29E-02	5.07E-05	6.77E-08	3.56E-02	2.17E-03	0.00E+00	2.31E-15	6.77E-14	2.26E-11	1.57E-14	0.00E+00
192-65-4	Dibenzo[a,e]pyrene	4.29E-02	5.07E-05	6.77E-08	3.56E-02	2.17E-03	0.00E+00	2.31E-15	6.77E-14	2.26E-11	1.57E-14	0.00E+00
193-39-5	Indeno(1,2,3-cd)pyrene	4.29E-02	2.93E-01	6.86E-08	5.91E-10	2.84E-10	5.96E-15	1.33E-11	6.86E-14	1.26E-15	0.00E+00	0.00E+00
206-44-0	Fluoranthene	4.29E-02	4.19E-02	2.53E-08	1.27E-11	7.39E-12	0.00E+00	2.49E-04	2.51E-08	5.79E-12	1.22E-11	0.00E+00
208-96-8	Acenaphthylene	4.29E-02	2.79E-02	2.85E-08	8.65E-08	8.15E-08	0.00E+00	1.67E-04	2.85E-08	6.48E-09	9.92E-09	0.00E+00
2234-13-1	Octachloronaphthalene	1.35E-04	1.10E-04	8.48E-11	1.37E-10	1.29E-10	0.00E+00	4.16E-07	5.33E-11	4.84E-12	8.36E-12	0.00E+00
224-42-0	Dibenz[a,j]acridine	4.29E-02	6.34E-06	6.80E-08	3.65E-02	2.16E-03	0.00E+00	9.17E-09	1.64E-08	1.07E-04	6.32E-06	0.00E+00
226-36-8	Dibenz[a,h]acridine	4.29E-02	6.34E-06	6.80E-08	3.65E-02	2.16E-03	0.00E+00	1.08E-08	1.94E-08	1.49E-04	8.83E-06	0.00E+00
2551-13-7	Trimethyl benzene	7.14E-03	7.15E-03	4.15E-09	0.00E+00	1.28E-15	0.00E+00	3.57E-06	4.15E-09	0.00E+00	1.31E-14	0.00E+00
26140-60-3	Terphenyls	4.29E-02	4.19E-02	2.53E-08	8.58E-12	7.38E-12	0.00E+00	2.19E-04	2.21E-08	3.39E-12	1.07E-11	0.00E+00
27154-33-2	Trichlorofluoroethane	7.14E-03	7.15E-03	4.14E-09	0.00E+00	0.00E+00	0.00E+00	7.15E-04	4.14E-09	0.00E+00	0.00E+00	0.00E+00
287-92-3	Cyclopentane	7.14E-03	7.17E-03	4.15E-09	0.00E+00	0.00E+00	0.00E+00	7.17E-07	4.15E-09	0.00E+00	0.00E+00	0.00E+00
3697-24-3	5-Methylchrysene	4.29E-02	4.19E-02	2.53E-08	1.37E-11	7.40E-12	0.00E+00	2.07E-04	2.08E-08	5.07E-12	1.01E-11	0.00E+00
3825-26-1	Ammonium perfluorooctanoate	4.29E-02	3.49E-02	2.69E-08	4.33E-08	4.07E-08	0.00E+00	2.09E-04	2.69E-08	3.24E-09	4.97E-09	0.00E+00
4170-30-3	2-Butenaldehyde (2-Butenal or Crotonaldehyde)	7.14E-03	1.25E-03	5.88E-09	2.19E-05	7.02E-06	0.00E+00	1.25E-07	5.88E-09	1.14E-06	3.86E-07	0.00E+00
50-00-0	Formaldehyde	7.14E-03	2.80E-04	9.50E-09	2.42E-03	2.93E-04	0.00E+00	2.80E-08	9.50E-09	1.21E-04	1.47E-05	0.00E+00
50-32-8	Benzo(a)pyrene	2.72E-02	1.40E-03	4.73E-08	2.36E-02	1.59E-03	1.00E-09	2.44E-06	1.37E-08	1.01E-04	6.83E-06	2.91E-10
53-70-3	Dibenzo(a,h)anthracene	2.72E-02	4.33E-04	4.21E-08	1.72E-02	1.44E-03	9.18E-10	1.40E-07	2.27E-09	2.64E-06	2.24E-07	4.96E-11
540-59-0	1,2-Dichloroethylene	7.14E-03	7.15E-03	4.15E-09	0.00E+00	1.28E-15	0.00E+00	7.15E-07	4.15E-09	0.00E+00	1.31E-14	0.00E+00
540-84-1	2,2,4-Trimethylpentane	7.14E-03	7.16E-03	4.14E-09	0.00E+00	0.00E+00	0.00E+00	7.16E-07	4.14E-09	0.00E+00	0.00E+00	0.00E+00
541-73-1	1,3-Dichlorobenzene	2.86E-03	2.86E-03	1.66E-09	0.00E+00	0.00E+00	0.00E+00	2.86E-05	1.66E-09	0.00E+00	5.21E-15	0.00E+00
56-23-5	Carbon tetrachloride	2.86E-03	2.86E-03	1.66E-09	0.00E+00	0.00E+00	0.00E+00	5.73E-04	1.66E-09	0.00E+00	0.00E+00	0.00E+00
563-80-4	3-Methyl-2-butanone	7.14E-03	5.82E-03	4.48E-09	7.21E-09	6.79E-09	0.00E+00	5.82E-07	4.48E-09	5.40E-10	8.28E-10	0.00E+00
56-49-5	3-Methylcholanthrene	4.29E-02	4.30E-02	2.49E-08	0.00E+00	0.00E+00	0.00E+00	9.39E-05	9.05E-09	0.00E+00	0.00E+00	0.00E+00
57-14-7	1,1-Dimethylhydrazine	4.29E-02	8.54E-03	3.44E-08	7.41E-05	2.56E-05	0.00E+00	8.54E-07	3.44E-08	3.89E-06	1.44E-06	0.00E+00
58-90-2	2,3,4,6-Tetrachlorophenol	4.29E-02	7.12E-03	3.56E-08	1.60E-04	5.01E-05	0.00E+00	2.14E-04	3.56E-08	8.30E-06	2.73E-06	0.00E+00
591-78-6	2-Hexanone	7.14E-03	5.82E-03	4.48E-09	7.21E-09	6.79E-09	0.00E+00	5.82E-06	4.48E-09	5.40E-10	8.28E-10	0.00E+00
59-50-7	4-Chloro-3-methylphenol	4.29E-02	2.38E-02	3.15E-08	2.23E-04	6.06E-05	4.08E-11	3.57E-04	3.15E-08	1.14E-05	3.20E-06	4.08E-11
59-89-2	N-Nitrosomorpholine	4.29E-02	4.19E-02	2.53E-08	1.55E-11	7.41E-12	0.00E+00	2.09E-06	2.53E-08	7.14E-12	1.23E-11	0.00E+00
602-87-9	5-Nitroacenaphthene	4.29E-02	3.60E-03	4.47E-08	3.00E-03	5.83E-04	0.00E+00	2.15E-05	4.45E-08	1.50E-04	2.95E-05	0.00E+00
60-29-7	Ethyl ether	4.29E-02	4.24E-02	2.51E-08	0.00E+00	1.01E-12	0.00E+00	4.24E-06	2.51E-08	1.53E-14	3.12E-12	0.00E+00
603-34-9	Triphenylamine	4.29E-02	5.65E-03	3.77E-08	4.46E-04	1.21E-04	8.15E-11	3.39E-05	3.77E-08	2.28E-05	6.39E-06	8.15E-11
60-34-4	Methylhydrazine	7.14E-03	3.88E-03	5.49E-09	1.07E-04	2.17E-05	1.41E-11	3.88E-07	5.49E-09	5.42E-06	1.12E-06	1.41E-11
60-35-5	Acetamide	7.14E-03	8.46E-06	1.13E-08	5.93E-03	3.61E-04	0.00E+00	4.23E-10	1.13E-08	2.97E-04	1.81E-05	0.00E+00
621-64-7	Di-n-Propylnitrosamine (N-Nitroso-di-n-propylamine)	4.29E-02	4.19E-02	2.53E-08	1.37E-11	7.39E-12	8.48E-11	2.09E-06	2.53E-08	5.49E-07	1.23E-11	8.48E-11
624-83-9	Methyl isocyanate	7.14E-03	7.07E-03	4.18E-09	0.00E+00	1.69E-13	0.00E+00	7.07E-06	4.18E-09	2.55E-15	5.20E-13	0.00E+00
627-13-4	Nitric acid, propyl ester	3.57E-03	3.53E-03	2.09E-09	0.00E+00	8.45E-14	0.00E+00	3.53E-07	2.09E-09	1.28E-15	2.60E-13	0.00E+00
62-75-9	N-Nitroso-N,N-dimethylamine (Dimethylnitrosamine)	4.29E-02	3.60E-03	4.47E-08	3.00E-03	5.83E-04	0.00E+00	1.80E-07	4.47E-08	1.51E-04	2.97E-05	0.00E+00

Table 17 Summary of Organic Constituents Emission Rates for the WTP

CAS #	COPC	Feed	Unabated Streams					Abated Streams				
		FRP01 + FRP14	PVP01	PJV04	LMP06	HMP06	PJV32	PVP12	PJV11	LVP18	HOP31	PJV34
		WTP Feed	PT Vessel Vent	PT RFD/PJM	LAW Melter	HLW Melter	HLW PJM/RFD	PT Vessel Vent	PT RFD/PJM	LAW Melter	HLW Melter	HLW PJM/RFD
		g/sec	g/sec	g/sec	g/sec	g/sec	g/sec	g/sec	g/sec	g/sec	g/sec	g/sec
630-20-6	1,1,1,2-Tetrachloroethane	7.14E-03	6.97E-03	4.21E-09	0.00E+00	1.22E-12	0.00E+00	6.97E-04	4.21E-09	1.22E-14	2.03E-12	0.00E+00
64-17-5	Ethyl alcohol	7.14E-03	3.88E-03	5.49E-09	1.07E-04	2.17E-05	1.41E-11	3.88E-07	5.49E-09	5.42E-06	1.12E-06	1.41E-11
64-18-6	Formic acid	1.07E+01	1.71E-01	1.66E-05	6.77E+00	5.67E-01	3.62E-07	1.71E-05	1.66E-05	3.39E-01	2.84E-02	3.62E-07
64-19-7	Acetic acid	1.55E+01	1.51E+01	9.12E-06	5.60E-09	2.67E-09	0.00E+00	1.51E-03	9.12E-06	2.57E-09	4.44E-09	0.00E+00
67-56-1	Methyl alcohol (Methanol)	7.14E-03	3.88E-03	5.49E-09	1.07E-04	2.17E-05	1.41E-11	3.88E-07	5.49E-09	5.42E-06	1.12E-06	1.41E-11
67-63-0	2-Propyl alcohol (Isopropanol; Propan-2-01)	1.43E-03	2.48E-04	1.18E-09	4.49E-06	1.43E-06	0.00E+00	2.48E-08	1.18E-09	2.33E-07	7.87E-08	0.00E+00
67-64-1	2-Propanone (Acetone)	1.43E-02	5.94E-03	1.03E-08	1.07E-06	5.50E-07	1.24E-13	5.94E-07	1.03E-08	6.23E-08	3.93E-08	1.24E-13
67-66-3	Chloroform	2.86E-03	2.86E-03	1.66E-09	0.00E+00	0.00E+00	0.00E+00	1.43E-03	1.66E-09	0.00E+00	5.21E-15	0.00E+00
67-72-1	Hexachloroethane	4.29E-02	4.29E-02	2.49E-08	0.00E+00	7.66E-15	0.00E+00	8.58E-04	2.49E-08	0.00E+00	7.85E-14	0.00E+00
684-16-2	Hexafluoroacetone	7.14E-03	7.15E-03	4.15E-09	0.00E+00	1.28E-15	0.00E+00	7.15E-03	4.15E-09	0.00E+00	1.31E-14	0.00E+00
71-23-8	n-Propyl alcohol	2.86E-03	4.96E-04	2.35E-09	8.97E-06	2.87E-06	0.00E+00	4.96E-08	2.35E-09	4.66E-07	1.57E-07	0.00E+00
71-36-3	n-Butyl alcohol	7.14E-03	1.24E-03	5.88E-09	2.24E-05	7.17E-06	0.00E+00	1.24E-07	5.88E-09	1.16E-06	3.93E-07	0.00E+00
71-43-2	Benzene	2.86E-03	2.86E-03	1.66E-09	0.00E+00	0.00E+00	0.00E+00	2.86E-05	1.66E-09	0.00E+00	0.00E+00	0.00E+00
71-55-6	Methyl chloroform (1,1,1-Trichloroethane)	2.86E-03	2.86E-03	1.66E-09	0.00E+00	0.00E+00	0.00E+00	2.86E-06	1.66E-09	0.00E+00	0.00E+00	0.00E+00
74-83-9	Bromomethane (Methyl bromide)	2.86E-03	2.86E-03	1.66E-09	0.00E+00	0.00E+00	0.00E+00	2.86E-06	1.66E-09	0.00E+00	5.21E-15	0.00E+00
74-87-3	Chloromethane (Methyl chloride)	2.86E-03	2.86E-03	1.66E-09	0.00E+00	0.00E+00	0.00E+00	1.43E-04	1.66E-09	0.00E+00	0.00E+00	0.00E+00
74-97-5	Bromochloromethane	7.14E-03	7.07E-03	4.18E-09	0.00E+00	1.69E-13	0.00E+00	3.53E-03	4.18E-09	2.55E-15	5.20E-13	0.00E+00
74-99-7	Methylacetylene	4.29E-02	4.29E-02	2.49E-08	0.00E+00	0.00E+00	0.00E+00	4.29E-06	2.49E-08	0.00E+00	0.00E+00	0.00E+00
75-00-3	Chloroethane	2.86E-03	2.86E-03	1.66E-09	0.00E+00	0.00E+00	0.00E+00	2.86E-06	1.66E-09	0.00E+00	0.00E+00	0.00E+00
75-01-4	Vinyl chloride (1-Chloroethene)	2.86E-03	2.86E-03	1.66E-09	0.00E+00	0.00E+00	0.00E+00	2.86E-07	1.66E-09	0.00E+00	0.00E+00	0.00E+00
75-05-8	Acetonitrile	7.14E-03	2.58E-03	5.28E-09	8.70E-07	4.29E-07	0.00E+00	2.58E-06	5.28E-09	4.96E-08	2.95E-08	0.00E+00
75-07-0	Acetaldehyde	4.29E-02	1.78E-02	3.10E-08	3.20E-06	1.65E-06	3.73E-13	1.78E-06	3.10E-08	1.87E-07	1.18E-07	3.73E-13
75-09-2	Dichloromethane (Methylene chloride)	2.86E-03	2.86E-03	1.66E-09	0.00E+00	0.00E+00	0.00E+00	5.72E-05	1.66E-09	0.00E+00	5.21E-15	0.00E+00
75-12-7	Formamide	4.29E-02	6.34E-06	6.80E-08	3.65E-02	2.16E-03	0.00E+00	6.34E-10	6.80E-08	1.82E-03	1.08E-04	0.00E+00
75-15-0	Carbon disulfide	7.14E-03	7.15E-03	4.14E-09	0.00E+00	0.00E+00	0.00E+00	7.15E-07	4.14E-09	0.00E+00	0.00E+00	0.00E+00
75-21-8	Ethylene oxide (Oxirane)	1.43E-03	1.27E-03	8.72E-10	8.76E-11	1.39E-10	0.00E+00	1.27E-07	8.72E-10	8.84E-12	2.93E-11	0.00E+00
75-27-4	Bromodichloromethane	7.14E-03	6.97E-03	4.21E-09	0.00E+00	1.22E-12	0.00E+00	1.39E-03	4.21E-09	1.22E-14	2.03E-12	0.00E+00
75-34-3	1,1-Dichloroethane	2.86E-03	2.86E-03	1.66E-09	0.00E+00	0.00E+00	0.00E+00	2.86E-07	1.66E-09	0.00E+00	5.21E-15	0.00E+00
75-35-4	1,1-Dichloroethene (Vinylidene chloride)	7.14E-03	7.16E-03	4.14E-09	0.00E+00	0.00E+00	0.00E+00	7.16E-07	4.14E-09	0.00E+00	0.00E+00	0.00E+00
75-43-4	Dichlorofluoromethane	2.86E-03	2.86E-03	1.66E-09	0.00E+00	0.00E+00	0.00E+00	2.86E-06	1.66E-09	0.00E+00	0.00E+00	0.00E+00
75-45-6	Chlorodifluoromethane	2.86E-03	2.86E-03	1.66E-09	0.00E+00	0.00E+00	0.00E+00	5.73E-05	1.66E-09	0.00E+00	0.00E+00	0.00E+00
75-50-3	Trimethylamine	7.14E-03	5.82E-03	4.48E-09	7.21E-09	6.79E-09	0.00E+00	5.82E-07	4.48E-09	5.40E-10	8.28E-10	0.00E+00
75-52-5	Nitromethane	4.29E-02	1.78E-02	3.10E-08	3.20E-06	1.65E-06	3.73E-13	1.78E-06	3.10E-08	1.87E-07	1.18E-07	3.73E-13
75-55-8	2-Methylaziridine	4.29E-02	7.45E-03	3.53E-08	1.35E-04	4.30E-05	0.00E+00	7.45E-07	3.53E-08	6.99E-06	2.36E-06	0.00E+00
75-61-6	Difluorodibromomethane	7.14E-03	7.16E-03	4.14E-09	0.00E+00	0.00E+00	0.00E+00	7.16E-03	4.14E-09	0.00E+00	0.00E+00	0.00E+00
75-63-8	Trifluorobromomethane	7.14E-03	7.17E-03	4.15E-09	0.00E+00	0.00E+00	0.00E+00	7.17E-03	4.15E-09	0.00E+00	0.00E+00	0.00E+00
75-65-0	2-Methyl-2-propanol	7.14E-03	1.24E-03	5.88E-09	2.24E-05	7.17E-06	0.00E+00	1.24E-07	5.88E-09	1.16E-06	3.93E-07	0.00E+00
75-69-4	Trichlorofluoromethane	7.14E-03	7.15E-03	4.14E-09	0.00E+00	0.00E+00	0.00E+00	7.15E-03	4.14E-09	0.00E+00	0.00E+00	0.00E+00
75-71-8	Dichlorodifluoromethane	7.14E-03	7.17E-03	4.15E-09	0.00E+00	0.00E+00	0.00E+00	7.17E-03	4.15E-09	0.00E+00	0.00E+00	0.00E+00
76-03-9	Trichloroacetic acid	7.14E-03	8.46E-06	1.13E-08	5.93E-03	3.61E-04	0.00E+00	1.69E-07	1.13E-08	2.97E-04	1.81E-05	0.00E+00

Table 17 Summary of Organic Constituents Emission Rates for the WTP

CAS #	COPC	Feed	Unabated Streams					Abated Streams				
		FRP01 + FRP14	PVP01	PJV04	LMP06	HMP06	PJV32	PVP12	PJV11	LVP18	HOP31	PJV34
		WTP Feed	PT Vessel Vent	PT RFD/PJM	LAW Melter	HLW Melter	HLW PJM/RFD	PT Vessel Vent	PT RFD/PJM	LAW Melter	HLW Melter	HLW PJM/RFD
		g/sec	g/sec	g/sec	g/sec	g/sec	g/sec	g/sec	g/sec	g/sec	g/sec	g/sec
76-11-9	1,1,1,2-Tetrachloro-2,2-difluoroethane	4.29E-02	4.30E-02	2.49E-08	0.00E+00	0.00E+00	0.00E+00	4.30E-04	2.49E-08	0.00E+00	0.00E+00	0.00E+00
76-12-0	1,1,2,2-Tetrachloro-1,2-difluoroethane	4.29E-02	4.29E-02	2.48E-08	0.00E+00	0.00E+00	0.00E+00	4.29E-04	2.48E-08	0.00E+00	0.00E+00	0.00E+00
76-13-1	1,2,2-Trichloro-1,1,2-trifluoroethane (Freon 113)	7.14E-03	7.17E-03	4.15E-09	0.00E+00	0.00E+00	0.00E+00	1.79E-04	4.15E-09	0.00E+00	0.00E+00	0.00E+00
76-14-2	1,2-Dichloro-1,1,2,2-tetrafluoroethane	7.14E-03	7.16E-03	4.14E-09	0.00E+00	0.00E+00	0.00E+00	7.16E-03	4.14E-09	0.00E+00	0.00E+00	0.00E+00
76-15-3	Chloropentafluoroethane	7.14E-03	7.16E-03	4.14E-09	0.00E+00	0.00E+00	0.00E+00	7.16E-03	4.14E-09	0.00E+00	0.00E+00	0.00E+00
78-83-1	2-Methylpropyl alcohol (Isobutyl alcohol)	4.29E-02	7.45E-03	3.53E-08	1.35E-04	4.30E-05	0.00E+00	7.45E-07	3.53E-08	6.99E-06	2.36E-06	0.00E+00
78-87-5	1,2-Dichloropropane	2.86E-03	2.86E-03	1.66E-09	0.00E+00	0.00E+00	0.00E+00	2.86E-06	1.66E-09	0.00E+00	5.21E-15	0.00E+00
78-92-2	1-Methylpropyl alcohol (2-Butanol)	2.86E-03	4.96E-04	2.35E-09	8.97E-06	2.87E-06	0.00E+00	4.96E-08	2.35E-09	4.66E-07	1.57E-07	0.00E+00
78-93-3	Methyl ethyl ketone (MEK, 2-Butanone)	7.14E-03	2.97E-03	5.17E-09	5.34E-07	2.75E-07	6.21E-14	2.97E-06	5.17E-09	3.11E-08	1.97E-08	6.21E-14
79-00-5	1,1,2-Trichloroethane	7.14E-03	7.07E-03	4.18E-09	0.00E+00	1.69E-13	0.00E+00	7.07E-07	4.18E-09	2.55E-15	5.20E-13	0.00E+00
79-01-6	Trichloroethylene	7.14E-03	7.16E-03	4.15E-09	0.00E+00	0.00E+00	0.00E+00	7.16E-07	4.15E-09	0.00E+00	0.00E+00	0.00E+00
79-09-4	Propionic acid	4.29E-02	1.68E-03	5.70E-08	1.45E-02	1.76E-03	0.00E+00	1.68E-07	5.70E-08	7.28E-04	8.84E-05	0.00E+00
79-10-7	2-Propenoic acid	5.72E-02	2.24E-03	7.60E-08	1.94E-02	2.35E-03	0.00E+00	2.24E-07	7.60E-08	9.70E-04	1.18E-04	0.00E+00
79-20-9	Methyl acetate	4.29E-02	3.49E-02	2.69E-08	4.33E-08	4.07E-08	0.00E+00	3.49E-06	2.69E-08	3.24E-09	4.97E-09	0.00E+00
79-34-5	1,1,2,2-Tetrachloroethane	1.35E-05	1.28E-05	8.06E-12	1.13E-14	4.72E-14	0.00E+00	1.28E-06	8.06E-12	2.09E-15	2.65E-14	0.00E+00
83-32-9	Acenaphthene	4.29E-02	4.18E-02	2.52E-08	2.45E-12	7.34E-12	0.00E+00	2.51E-04	2.52E-08	1.13E-12	1.22E-11	0.00E+00
84-66-2	Diethyl phthalate	4.29E-02	2.05E-03	5.46E-08	1.12E-02	1.56E-03	0.00E+00	4.11E-08	5.46E-08	5.62E-04	7.87E-05	0.00E+00
84-74-2	Dibutyl phthalate	4.29E-02	4.09E-03	4.93E-08	4.56E-03	6.92E-04	4.43E-10	8.13E-08	4.90E-08	2.28E-04	3.48E-05	4.41E-10
85-01-8	Phenanthrene	4.29E-02	1.78E-02	3.10E-08	3.20E-06	1.65E-06	3.73E-13	1.07E-04	3.10E-08	1.87E-07	1.18E-07	3.72E-13
85-68-7	Butylbenzyl phthalate	4.29E-02	4.09E-03	4.93E-08	4.56E-03	6.92E-04	4.43E-10	7.75E-08	4.67E-08	2.07E-04	3.17E-05	4.20E-10
86-73-7	Fluorene	4.29E-02	3.49E-02	2.69E-08	4.33E-08	4.07E-08	0.00E+00	2.09E-04	2.69E-08	3.24E-09	4.97E-09	0.00E+00
87-68-3	Hexachlorobutadiene	7.14E-03	7.15E-03	4.14E-09	0.00E+00	0.00E+00	0.00E+00	2.86E-05	4.14E-09	0.00E+00	0.00E+00	0.00E+00
88-06-2	2,4,6-Trichlorophenol	4.29E-02	2.33E-02	3.30E-08	6.40E-04	1.30E-04	8.48E-11	1.40E-04	3.30E-08	3.25E-05	6.73E-06	8.48E-11
88-72-2	2-Nitrotoluene	7.14E-03	1.42E-03	5.73E-09	1.23E-05	4.26E-06	0.00E+00	7.12E-08	5.73E-09	6.48E-07	2.40E-07	0.00E+00
88-75-5	2-Nitrophenol	4.29E-02	8.54E-03	3.44E-08	7.41E-05	2.56E-05	0.00E+00	1.28E-04	3.44E-08	3.89E-06	1.44E-06	0.00E+00
88-89-1	Picric acid	4.29E-02	7.76E-08	6.82E-08	3.67E-02	2.16E-03	0.00E+00	1.45E-12	6.37E-08	1.60E-03	9.44E-05	0.00E+00
91-20-3	Naphthalene	1.43E-03	1.30E-03	8.63E-10	3.29E-12	1.29E-11	0.00E+00	6.51E-06	8.63E-10	5.77E-13	6.37E-12	0.00E+00
91-22-5	Quinoline	4.29E-02	3.60E-03	4.47E-08	3.00E-03	5.83E-04	0.00E+00	1.80E-07	4.47E-08	1.51E-04	2.97E-05	0.00E+00
91-58-7	2-Chloronapthalene	4.29E-02	4.06E-02	2.56E-08	3.57E-11	1.50E-10	0.00E+00	2.44E-04	2.56E-08	6.63E-12	8.39E-11	0.00E+00
92-52-4	1,1'-Biphenyl	2.86E-02	2.71E-02	1.70E-08	2.38E-11	9.97E-11	0.00E+00	5.41E-06	1.70E-08	4.42E-12	5.59E-11	0.00E+00
92-93-3	4-Nitrobiphenyl	4.29E-02	2.33E-02	3.30E-08	6.40E-04	1.30E-04	8.48E-11	1.40E-04	3.29E-08	3.25E-05	6.72E-06	8.47E-11
95-13-6	Indene	4.29E-02	4.18E-02	2.52E-08	0.00E+00	7.33E-12	0.00E+00	2.09E-05	2.52E-08	7.35E-14	1.22E-11	0.00E+00
95-47-6	o-Xylene	2.86E-03	2.86E-03	1.66E-09	0.00E+00	0.00E+00	0.00E+00	2.86E-07	1.66E-09	0.00E+00	5.21E-15	0.00E+00
95-48-7	o-Cresol (2-Methylphenol)	7.14E-03	6.00E-04	7.44E-09	4.99E-04	9.71E-05	0.00E+00	3.00E-07	7.44E-09	2.51E-05	4.94E-06	0.00E+00
95-49-8	2-Chlorotoluene	4.29E-02	4.29E-02	2.49E-08	0.00E+00	7.66E-15	0.00E+00	2.14E-06	2.49E-08	0.00E+00	7.85E-14	0.00E+00
95-50-1	o-Dichlorobenzene (1,2-Dichlorobenzene)	2.86E-03	2.79E-03	1.68E-09	0.00E+00	4.89E-13	0.00E+00	2.79E-05	1.68E-09	4.90E-15	8.13E-13	0.00E+00
95-57-8	2-Chlorophenol	4.29E-02	7.45E-03	3.53E-08	1.35E-04	4.30E-05	0.00E+00	3.72E-07	3.53E-08	6.99E-06	2.36E-06	0.00E+00
95-95-4	2,4,5-Trichlorophenol	4.29E-02	3.60E-03	4.47E-08	3.00E-03	5.83E-04	0.00E+00	2.16E-05	4.47E-08	1.51E-04	2.97E-05	0.00E+00
96-22-0	3-Pentanone	1.43E-02	1.16E-02	8.95E-09	1.44E-08	1.36E-08	0.00E+00	1.16E-06	8.95E-09	1.08E-09	1.66E-09	0.00E+00
96-69-5	Bis(3-tert-butyl-4-hydroxy-6-methyl-phenyl)sulfide	4.29E-02	4.29E-02	2.49E-08	0.00E+00	7.66E-15	0.00E+00	2.57E-04	2.49E-08	0.00E+00	7.85E-14	0.00E+00

Table 17 Summary of Organic Constituents Emission Rates for the WTP

CAS #	COPC	Feed	Unabated Streams					Abated Streams				
		FRP01 + FRP14	PVP01	PJV04	LMP06	HMP06	PJV32	PVP12	PJV11	LVP18	HOP31	PJV34
		WTP Feed	PT Vessel Vent	PT RFD/PJM	LAW Melter	HLW Melter	HLW PJM/RFD	PT Vessel Vent	PT RFD/PJM	LAW Melter	HLW Melter	HLW PJM/RFD
		g/sec	g/sec	g/sec	g/sec	g/sec	g/sec	g/sec	g/sec	g/sec	g/sec	g/sec
98-51-1	p-tert-Butyltoluene	4.29E-02	4.29E-02	2.48E-08	0.00E+00	0.00E+00	0.00E+00	2.15E-06	2.48E-08	0.00E+00	0.00E+00	0.00E+00
98-82-8	Cumene	4.29E-02	4.29E-02	2.49E-08	0.00E+00	0.00E+00	0.00E+00	2.15E-06	2.49E-08	0.00E+00	0.00E+00	0.00E+00
98-83-9	alpha-Methylstyrene	7.14E-03	7.15E-03	4.15E-09	0.00E+00	1.28E-15	0.00E+00	3.57E-05	4.15E-09	0.00E+00	1.31E-14	0.00E+00
98-86-2	Acetophenone	2.86E-02	5.16E-03	2.33E-08	7.50E-05	2.45E-05	0.00E+00	2.58E-05	2.33E-08	3.90E-06	1.36E-06	0.00E+00
98-95-3	Nitrobenzene	2.86E-02	5.69E-03	2.29E-08	4.94E-05	1.70E-05	0.00E+00	2.85E-07	2.29E-08	2.59E-06	9.62E-07	0.00E+00
Coplanar PCB's												
31508-00-6	2,3',4,4',5-Pentachlorobiphenyl (PBC 118)	1.24E-06	3.08E-06	9.81E-13	4.20E-14	1.50E-13	0.00E+00	1.85E-08	9.81E-13	7.34E-15	6.83E-14	0.00E+00
32598-13-3	3,3',4,4'-Tetrachlorobiphenyl (TCB)	1.24E-06	3.08E-06	9.81E-13	4.20E-14	1.50E-13	0.00E+00	1.85E-08	9.81E-13	7.34E-15	6.83E-14	0.00E+00
32598-14-4	2,3,3',4,4'-Pentachlorobiphenyl (PCB 105)	1.24E-06	3.08E-06	9.81E-13	4.20E-14	1.50E-13	0.00E+00	1.85E-08	9.81E-13	7.34E-15	6.83E-14	0.00E+00
32774-16-6	3,3',4,4',5,5'-Hexachlorobiphenyl	1.24E-06	3.08E-06	9.81E-13	4.20E-14	1.50E-13	0.00E+00	1.85E-08	9.81E-13	7.34E-15	6.83E-14	0.00E+00
35065-29-3	2,2',3,4,4',5,5'-Heptachlorobiphenyl	1.24E-06	3.08E-06	9.81E-13	4.20E-14	1.50E-13	0.00E+00	1.85E-08	9.81E-13	7.34E-15	6.83E-14	0.00E+00
35065-30-6	2,2',3,3',4,4',5-Heptachlorobiphenyl	1.24E-06	3.08E-06	9.81E-13	4.20E-14	1.50E-13	0.00E+00	1.85E-08	9.81E-13	7.34E-15	6.83E-14	0.00E+00
38380-08-4	2,3,3',4,4',5-Hexachlorobiphenyl (PCB 157)	1.24E-06	3.08E-06	9.81E-13	4.20E-14	1.50E-13	0.00E+00	1.85E-08	9.81E-13	7.34E-15	6.83E-14	0.00E+00
39635-31-9	2,3,3',4,4',5,5'-Heptachlorobiphenyl	1.24E-06	3.08E-06	9.81E-13	4.20E-14	1.50E-13	0.00E+00	1.85E-08	9.81E-13	7.34E-15	6.83E-14	0.00E+00
52663-72-6	2,3',4,4',5,5'-Hexachlorobiphenyl	1.24E-06	3.08E-06	9.81E-13	4.20E-14	1.50E-13	0.00E+00	1.85E-08	9.81E-13	7.34E-15	6.83E-14	0.00E+00
57465-28-8	3,3',4,4',5-Pentachlorobiphenyl	1.24E-06	3.08E-06	9.81E-13	4.20E-14	1.50E-13	0.00E+00	1.85E-08	9.81E-13	7.34E-15	6.83E-14	0.00E+00
65510-44-3	2',3,4,4',5-Pentachlorobiphenyl	1.24E-06	3.08E-06	9.81E-13	4.20E-14	1.50E-13	0.00E+00	1.85E-08	9.81E-13	7.34E-15	6.83E-14	0.00E+00
69782-90-7	2,3,3',4,4',5'-Hexachlorobiphenyl	1.24E-06	3.08E-06	9.81E-13	4.20E-14	1.50E-13	0.00E+00	1.85E-08	9.81E-13	7.34E-15	6.83E-14	0.00E+00
70362-50-4	3,4,4',5-Tetrachlorobiphenyl	1.24E-06	3.08E-06	9.81E-13	4.20E-14	1.50E-13	0.00E+00	1.85E-08	9.81E-13	7.34E-15	6.83E-14	0.00E+00
74472-37-0	2,3,4,4',5-Pentachlorobiphenyl	1.24E-06	3.08E-06	9.81E-13	4.20E-14	1.50E-13	0.00E+00	1.85E-08	9.81E-13	7.34E-15	6.83E-14	0.00E+00

Table 18 Estimated Inorganic COPC Emissions

CAS Number	Compound	Feed	Unabated Streams									Abated Streams				
		FRP01 + FRP14	PVP01	PJV04	LFP04	LMP06	LVP01	HFP03	HMP06	HOP10	PJV32	PVP12	PJV11	LVP18	HOP31	PJV34
		WTP Feed	PT Vessel Vent	PT RFD/PJM	LAW Melter Feed	LAW Melter	LAW Vessel Vent	HLW Melter Feed	HLW Melter	HLW Vessel Vent	HLW PJM/RFD	PT Vessel Vent	PT RFD/PJM	LAW Melter	HLW Melter	HLW PJM/RFD
		g/sec	g/sec	g/sec	g/sec	g/sec	g/sec	g/sec	g/sec	g/sec	g/sec	g/sec	g/sec	g/sec	g/sec	g/sec
7440-22-4	Silver	2.09E-02	1.07E-07	7.19E-08	2.45E-03	8.17E-05	7.48E-11	1.91E-02	6.37E-04	3.83E-09	4.04E-10	0.00E+00	7.19E-14	4.54E-12	3.54E-13	2.02E-15
7429-90-5	Aluminum	1.00E+01	6.01E-05	2.08E-05	1.91E+01	1.91E-01	4.58E-07	3.34E+00	3.34E-02	6.69E-07	2.10E-08	4.29E-13	2.08E-11	2.17E-09	4.26E-12	1.05E-13
7440-38-2	Arsenic	8.65E-03	6.89E-08	1.63E-08	8.68E-03	1.45E-03	2.78E-10	1.41E-03	6.72E-05	2.83E-10	4.24E-11	0.00E+00	1.63E-14	7.53E-11	3.89E-14	0.00E+00
7440-42-8	Boron	3.37E-02	2.68E-06	4.80E-07	1.79E+01	5.95E-01	3.69E-07	1.78E+00	5.93E-02	3.57E-07	3.73E-08	1.92E-14	4.80E-13	1.68E-08	1.00E-11	1.87E-13
7440-39-3	Barium	1.97E-02	1.05E-07	6.51E-08	2.80E-03	2.80E-05	8.43E-11	1.71E-02	1.71E-04	3.41E-09	1.07E-10	0.00E+00	6.51E-14	1.30E-13	3.31E-14	0.00E+00
7440-69-9	Bismuth	9.27E-02	2.46E-07	3.26E-07	5.05E-03	6.31E-05	1.52E-10	8.92E-02	1.54E-03	1.79E-08	9.73E-10	1.76E-15	3.26E-13	4.05E-12	9.87E-13	4.87E-15
7440-70-2	Calcium	1.58E-01	2.77E-05	5.15E-07	1.70E+01	2.26E-01	3.45E-07	1.05E-01	1.40E-03	2.11E-08	8.83E-10	1.98E-13	5.15E-13	5.14E-09	3.55E-13	4.41E-15
7440-43-9	Cadmium	6.61E-02	1.96E-07	2.53E-07	5.54E-03	5.54E-04	1.68E-10	6.88E-02	6.88E-03	1.38E-08	4.37E-09	1.40E-15	2.53E-13	2.17E-11	2.44E-12	2.18E-14
16887-00-6	Chloride	1.59E+00	8.77E-06	2.59E-06	1.77E+00	0.00E+00	5.75E-08	6.25E-02	0.00E+00	1.51E-07	7.60E-09	6.26E-14	2.59E-12	2.88E-13	7.56E-15	3.80E-14
18540-29-9	Chromium (hexavalent)	3.94E-01	1.73E-06	7.21E-07	3.72E-01	9.07E-03	1.10E-08	6.16E-02	6.16E-04	4.49E-08	1.04E-09	1.24E-14	7.21E-13	1.03E-09	7.76E-13	5.18E-15
7440-50-8	Copper	9.61E-03	5.35E-08	2.95E-08	2.37E-03	1.18E-05	7.12E-11	7.27E-03	4.27E-05	1.45E-09	2.70E-11	0.00E+00	2.95E-14	6.81E-13	2.46E-14	0.00E+00
16984-48-8	Flouride	7.10E-01	2.96E-06	1.97E-06	4.63E-01	0.00E+00	1.46E-08	3.85E-01	0.00E+00	7.78E-08	4.75E-08	2.11E-14	1.97E-12	7.30E-14	4.32E-15	2.38E-13
7439-89-6	Iron	2.73E+00	1.36E-05	9.78E-06	2.40E+01	1.20E-01	4.83E-07	3.05E+00	2.54E-02	7.32E-07	1.84E-08	9.69E-14	9.78E-12	1.36E-09	3.25E-12	9.21E-14
7439-97-6	Mercury	1.85E-02	2.92E-07	1.65E-07	2.88E-02	2.88E-02	1.07E-09	3.94E-02	3.94E-02	8.17E-09	1.81E-08	2.92E-07	1.65E-07	7.77E-05	1.07E-05	1.81E-08
7440-09-7	Potassium	3.73E+00	2.09E-05	5.89E-06	3.79E+00	1.89E-01	1.16E-07	1.69E-01	8.47E-03	3.40E-08	5.37E-09	1.49E-13	5.89E-12	9.28E-09	3.77E-12	2.69E-14
7439-93-2	Lithium	4.29E-03	1.36E-07	4.36E-08	4.72E+00	4.72E-02	9.57E-08	7.38E-01	7.38E-03	1.48E-07	4.67E-09	0.00E+00	4.36E-14	2.81E-09	4.40E-12	2.34E-14
7439-95-4	Magnesium	2.84E-02	2.56E-06	9.58E-08	6.22E+00	3.11E-02	1.25E-07	2.59E-02	4.11E-04	5.18E-09	2.59E-10	1.83E-14	9.58E-14	4.32E-09	1.14E-13	1.29E-15
7439-96-5	Manganese	2.65E-01	1.21E-06	9.18E-07	8.69E-02	1.16E-03	1.94E-09	2.50E-01	3.33E-03	5.00E-08	2.10E-09	8.67E-15	9.18E-13	1.93E-11	6.19E-13	1.05E-14
7440-23-5	Sodium	7.00E+01	3.37E-04	1.21E-04	6.76E+01	6.76E-01	2.04E-06	6.62E+00	6.62E-02	1.46E-05	3.05E-07	2.40E-12	1.21E-10	4.33E-08	4.32E-11	1.53E-12
7440-02-0	Nickel	1.40E-01	4.37E-07	4.46E-07	9.38E-02	1.05E-03	2.21E-09	1.12E-01	1.26E-03	3.97E-08	1.14E-09	3.12E-15	4.46E-13	6.59E-11	5.93E-13	5.68E-15
14797-65-0	Nitrite	2.85E+01	1.31E-04	4.58E-05	2.66E+01	0.00E+00	7.98E-07	1.73E+00	0.00E+00	3.45E-07	1.97E-13	9.33E-13	4.58E-11	3.99E-12	1.92E-14	0.00E+00
14797-55-8	Nitrate	5.09E+01	3.51E-04	1.03E-04	6.55E+01	0.00E+00	1.96E-06	5.82E+00	0.00E+00	2.47E-05	4.69E-07	2.51E-12	1.03E-10	9.82E-12	1.37E-12	2.34E-12
14280-30-9	Hydroxide	4.04E+01	2.65E-04	7.97E-05	7.39E-01	0.00E+00	2.99E-07	1.65E+01	0.00E+00	7.16E-06	7.68E-08	1.89E-12	7.97E-11	1.49E-12	3.98E-13	3.84E-13
7723-14-0	Phosphorous	0.00E+00	0.00E+00	0.00E+00	0.00E+00	0.00E+00	0.00E+00	0.00E+00	0.00E+00	0.00E+00	0.00E+00	0.00E+00	0.00E+00	0.00E+00	0.00E+00	0.00E+00
7439-92-1	Lead	1.73E-01	4.99E-07	5.65E-07	2.87E-02	3.50E-04	8.65E-10	1.46E-01	1.83E-03	2.93E-08	1.16E-09	3.56E-15	5.65E-13	2.12E-11	1.11E-12	5.79E-15
14265-44-2	Phosphate	1.70E+00	1.12E-05	3.98E-06	1.18E+00	2.96E-02	3.47E-08	6.83E-01	1.71E-02	1.37E-07	1.07E-08	7.99E-14	3.98E-12	4.35E-09	2.61E-12	5.37E-14
63705-05-5	Total Sulfur	0.00E+00	0.00E+00	0.00E+00	0.00E+00	0.00E+00	0.00E+00	0.00E+00	0.00E+00	0.00E+00	0.00E+00	0.00E+00	0.00E+00	7.79E-03	6.29E-03	0.00E+00
7440-21-3	Silicon	5.59E-01	1.15E-05	2.54E-06	2.69E+02	8.95E-01	5.39E-06	3.31E+01	1.44E-01	6.63E-06	9.06E-08	8.19E-14	2.54E-12	1.36E-08	2.46E-11	4.53E-13
14808-79-8	Sulfate	2.81E+00	1.36E-05	4.79E-06	2.56E+00	0.00E+00	7.62E-08	3.05E-01	0.00E+00	6.11E-08	9.09E-15	9.69E-14	4.79E-12	3.81E-13	3.39E-15	0.00E+00
7440-24-6	Strontium (total)	9.90E-03	2.59E-08	3.47E-08	4.87E-04	4.87E-06	1.47E-11	9.51E-03	9.51E-05	1.90E-09	5.98E-11	0.00E+00	3.47E-14	5.54E-14	1.21E-14	0.00E+00
7440-66-6	Zinc	1.38E-02	6.17E-07	1.12E-07	1.42E+01	1.42E-01	2.87E-07	8.07E-01	8.07E-03	1.62E-07	5.08E-09	4.41E-15	1.12E-13	3.65E-09	2.05E-12	2.54E-14
7440-67-7	Zirconium	6.57E-01	3.25E-06	2.36E-06	1.31E+01	4.38E-02	2.64E-07	7.67E-01	4.04E-03	1.54E-07	2.54E-09	2.32E-14	2.36E-12	1.31E-09	7.57E-13	1.27E-14
7440-41-7	Beryllium	4.98E-04	2.47E-09	1.79E-09	3.63E-05	1.81E-07	3.80E-08	4.98E-04	3.83E-06	1.16E-10	1.93E-12	0.00E+00	1.79E-15	1.92E-13	0.00E+00	0.00E+00
57-12-5	Cyanide	1.31E-03	8.60E-09	3.06E-09	9.09E-04	2.27E-05	5.07E-09	5.25E-04	1.31E-05	1.05E-10	8.26E-12	0.00E+00	3.06E-15	8.99E-13	2.02E-15	0.00E+00
7440-48-4	Cobalt	2.35E-03	1.01E-08	8.40E-09	5.89E-05	2.95E-07	3.37E-10	2.33E-03	1.79E-05	4.66E-10	2.04E-11	0.00E+00	8.40E-15	2.47E-14	1.40E-14	0.00E+00
7439-98-7	Molybdenum	1.80E-02	4.77E-08	6.32E-08	9.77E-04	1.22E-05	5.60E-09	1.73E-02	2.67E-04	3.46E-09	1.88E-10	0.00E+00	6.32E-14	4.26E-14	1.60E-15	0.00E+00
7440-16-6	Rhodium	2.96E-03	9.80E-09	8.58E-09	1.07E-03	2.02E-05	3.23E-11	1.96E-03	5.30E-05	3.93E-10	3.34E-11	0.00E+00	8.58E-15	6.39E-14	0.00E+00	0.00E+00
7440-36-0	Antimony	4.52E-03	1.19E-08	1.58E-08	2.39E-04	2.99E-06	1.37E-09	4.33E-03	4.33E-05	8.66E-10	2.73E-11	0.00E+00	1.58E-14	3.43E-13	5.42E-14	0.00E+00
7782-49-2	Selenium	7.76E-03	3.23E-08	2.15E-08	5.05E-03	2.97E-03	3.03E-08	4.20E-03	2.00E-03	8.49E-10	5.19E-10	0.00E+00	2.15E-14	1.78E-11	1.73E-14	2.59E-15
7440-31-5	Tin	3.69E-04	1.05E-09	1.20E-09	5.80E-05	2.90E-07	3.31E-10	3.13E-04	2.41E-06	6.26E-11	1.64E-12	0.00E+00	1.20E-15	4.95E-15	0.00E+00	0.00E+00
7440-25-7	Tantalum	7.28E-03	3.60E-08	2.62E-08	5.30E-04	2.12E-06	5.56E-07	7.27E-03	5.59E-05	1.70E-09	2.82E-11	0.00E+00	2.62E-14	2.78E-12	0.00E+00	0.00E+00
7440-28-0	Thallium	5.54E-03	2.31E-08	1.54E-08	3.61E-03	6.01E-04	2.16E-08	3.00E-03	2.31E-05	6.06E-10	3.70E-10	0.00E+00	1.54E-14	5.20E-13	0.00E+00	1.85E-15
7440-61-1	Uranium	1.43E-01	6.51E-07	4.90E-07	1.35E-02	6.73E-05	7.69E-08	1.31E-01	1.01E-03	2.63E-08	1.15E-09	4.65E-15	4.90E-13	1.15E-12	1.29E-13	5.74E-15

Table 18 Estimated Inorganic COPC Emissions

CAS Number	Compound	Feed	Unabated Streams									Abated Streams				
		FRP01 + FRP14	PVP01	PJV04	LFP04	LMP06	LVP01	HFP03	HMP06	HOP10	PJV32	PVP12	PJV11	LVP18	HOP31	PJV34
		WTP Feed	PT Vessel Vent	PT RFD/PJM	LAW Melter Feed	LAW Melter	LAW Vessel Vent	HLW Melter Feed	HLW Melter	HLW Vessel Vent	HLW PJM/RFD	PT Vessel Vent	PT RFD/PJM	LAW Melter	HLW Melter	HLW PJM/RFD
		g/sec	g/sec	g/sec	g/sec	g/sec	g/sec	g/sec	g/sec	g/sec	g/sec	g/sec	g/sec	g/sec	g/sec	g/sec
7440-62-2	Vanadium	3.11E-03	8.27E-09	1.09E-08	1.69E-04	2.12E-06	9.71E-10	2.99E-03	2.30E-05	5.99E-10	3.26E-11	0.00E+00	1.09E-14	7.32E-15	0.00E+00	0.00E+00
7440-33-7	Tungsten	6.46E-03	3.20E-08	2.32E-08	4.70E-04	1.88E-06	4.93E-07	6.45E-03	4.96E-05	1.51E-09	2.50E-11	0.00E+00	2.32E-14	2.47E-12	0.00E+00	0.00E+00
7440-65-5	Yttrium	1.29E-03	3.40E-09	4.48E-09	7.55E-05	7.55E-07	4.32E-10	1.22E-03	1.22E-05	2.45E-10	7.70E-12	0.00E+00	4.48E-15	1.07E-14	1.56E-15	0.00E+00
630-08-0	Carbon monoxide	0.00E+00	0.00E+00	0.00E+00	0.00E+00	4.94E-01	0.00E+00	0.00E+00	2.97E-02	0.00E+00	0.00E+00	0.00E+00	0.00E+00	2.47E-02	1.49E-03	0.00E+00
10102-43-9	Nitric Oxide	0.00E+00	0.00E+00	0.00E+00	0.00E+00	2.58E+01	0.00E+00	0.00E+00	2.08E+00	0.00E+00	0.00E+00	0.00E+00	0.00E+00	1.17E+00	1.04E-01	0.00E+00
10102-44-0	Nitrogen dioxide	0.00E+00	0.00E+00	0.00E+00	0.00E+00	3.62E+00	0.00E+00	0.00E+00	2.99E-01	0.00E+00	0.00E+00	0.00E+00	0.00E+00	1.64E-01	1.49E-02	0.00E+00
7446-09-5	Sulfur dioxide	0.00E+00	0.00E+00	0.00E+00	0.00E+00	9.33E-02	0.00E+00	0.00E+00	7.54E-02	0.00E+00	0.00E+00	0.00E+00	0.00E+00	2.34E-03	6.28E-02	0.00E+00
7664-41-7	Ammonia/Ammonium	3.44E-02	8.42E-06	5.34E-08	5.90E-03	5.90E-02	6.19E-10	6.14E-03	1.32E-02	1.23E-09	3.54E-11	2.81E-06	5.34E-08	1.04E-01	9.15E-03	3.54E-11
7647-01-0	Hydrochloric Acid	0.00E+00	0.00E+00	0.00E+00	0.00E+00	9.61E-01	0.00E+00	0.00E+00	3.38E-02	0.00E+00	0.00E+00	0.00E+00	0.00E+00	2.02E-02	2.60E-05	0.00E+00
7664-39-3	Hydrofluoric Acid	0.00E+00	0.00E+00	0.00E+00	0.00E+00	1.22E-01	0.00E+00	0.00E+00	1.01E-01	0.00E+00	0.00E+00	0.00E+00	0.00E+00	1.46E-03	2.22E-05	0.00E+00
	Total	2.16E+02	1.28E-03	4.09E-04	5.56E+02	3.44E+01	1.45E-05	7.70E+01	3.07E+00	5.64E-05	1.13E-06	3.10E-06	2.19E-07	1.50E+00	1.99E-01	1.81E-08

Table 19 Estimated Radionuclide COPC Emissions

CAS Number	Compound	Feed	Unabated Streams									Abated Streams				
		FRP01 + FRP14	PVP01	PJV04	LFP04	LMP06	LVP01	HFP03	HMP06	HOP10	PJV32	PVP12	PJV11	LVP18	HOP31	PJV34
		WTP Feed	PT Vessel Vent	PT RFD/PJM	LAW Melter Feed	LAW Melter	LAW Vessel Vent	HLW Melter Feed	HLW Melter	HLW Vessel Vent	HLW PJM/RFD	PT Vessel Vent	PT RFD/PJM	LAW Melter	HLW Melter	HLW PJM/RFD
		Ci/yr	Ci/yr	Ci/yr	Ci/yr	Ci/yr	Ci/yr	Ci/yr	Ci/yr	Ci/yr	Ci/yr	Ci/yr	Ci/yr	Ci/yr	Ci/yr	Ci/yr
14596-10-2	Americium-241	3.15E+05	8.13E-01	1.13E+00	6.62E+03	8.28E+01	2.00E-04	3.14E+05	5.42E+03	6.29E-02	3.41E-03	5.81E-09	1.13E-06	9.42E-07	6.88E-07	1.70E-08
14762-75-5	Carbon-14	1.59E+02	1.17E-03	2.90E-04	1.33E+02	1.33E+02	3.98E-06	2.56E+01	2.56E+01	5.12E-06	0.00E+00	1.17E-03	2.90E-04	1.33E+02	2.56E+01	0.00E+00
10198-40-0	Cobalt-60	3.52E+04	1.51E-01	1.25E-01	8.80E+02	4.40E+00	2.64E-05	3.47E+04	4.82E+02	6.95E-03	3.05E-04	1.08E-09	1.25E-07	3.44E-07	3.77E-07	1.52E-09
15757-87-6	Curium-243	4.34E+02	1.82E-03	1.57E-03	7.55E-01	3.77E-03	2.27E-08	4.39E+02	6.10E+00	8.79E-05	3.84E-06	1.30E-11	1.57E-09	4.30E-11	7.75E-10	1.92E-11
13981-15-2	Curium-244	9.87E+03	4.15E-02	3.57E-02	1.78E+01	8.91E-02	5.36E-07	9.99E+03	1.39E+02	2.00E-03	8.72E-05	2.96E-10	3.57E-08	1.02E-09	1.76E-08	4.36E-10
10045-97-3	Cesium-137	5.40E+07	1.46E+02	1.20E+02	4.35E+03	2.18E+03	1.61E-04	5.58E+07	1.86E+06	1.12E+01	1.18E+00	1.04E-06	1.20E-04	1.51E-04	1.29E-03	5.89E-06
14683-23-9	Europium-152	1.70E+03	4.39E-03	6.05E-03	4.94E+01	2.47E-01	1.48E-06	1.67E+03	2.32E+01	3.35E-04	1.46E-05	3.14E-11	6.05E-09	2.81E-09	2.95E-09	7.30E-11
15585-10-1	Europium-154	1.89E+05	4.99E-01	6.63E-01	1.02E+04	5.11E+01	3.07E-04	1.81E+05	2.52E+03	3.63E-02	1.58E-03	3.56E-09	6.63E-07	5.82E-07	3.20E-07	7.92E-09
14391-16-3	Europium-155	2.95E+04	8.06E-02	1.00E-01	2.95E+03	1.48E+01	8.87E-05	2.69E+04	3.73E+02	5.38E-03	2.35E-04	5.76E-10	1.00E-07	1.68E-07	4.74E-08	1.17E-09
10028-17-8	Tritium	1.39E+03	9.79E-01	3.34E-03	1.43E+02	1.43E+02	5.45E-06	6.23E+02	6.23E+02	1.28E-04	1.98E-04	8.07E-01	3.34E-03	2.73E+01	3.08E+02	1.98E-04
15046-84-1	Iodine-129	5.18E+00	5.11E-05	1.06E-05	4.76E+00	4.33E+00	1.50E-07	1.20E+00	1.09E+00	2.41E-07	6.26E-08	1.46E-05	1.06E-05	3.28E-02	9.91E-04	6.26E-08
13981-37-8	Nickel-63	2.22E+04	9.17E-02	4.64E-02	1.59E+04	1.79E+02	4.79E-04	6.42E+03	7.21E+01	1.28E-03	4.54E-05	6.55E-10	4.64E-08	1.12E-05	3.40E-08	2.27E-10
13994-20-2	Neptunium-237	2.59E+02	1.11E-03	9.27E-04	5.20E+00	2.60E-02	1.56E-07	2.57E+02	3.57E+00	5.15E-05	2.25E-06	7.90E-12	9.27E-10	2.96E-10	4.54E-10	1.12E-11
13981-16-3	Plutonium-238	1.23E+03	3.18E-03	4.41E-03	2.94E+01	1.47E-01	8.84E-07	1.22E+03	1.70E+01	2.44E-04	1.07E-05	2.27E-11	4.41E-09	1.67E-09	2.15E-09	5.33E-11
15117-48-3	Plutonium-239	1.11E+04	2.88E-02	3.93E-02	4.06E+02	2.03E+00	1.22E-05	1.08E+04	1.50E+02	2.17E-03	9.45E-05	2.06E-10	3.93E-08	2.31E-08	1.91E-08	4.73E-10
14119-33-6	Plutonium-240	2.92E+03	7.60E-03	1.04E-02	1.05E+02	5.26E-01	3.16E-06	2.85E+03	3.97E+01	5.71E-04	2.49E-05	5.43E-11	1.04E-08	5.99E-09	5.04E-09	1.25E-10
14119-32-5	Plutonium-241	7.78E+04	2.01E-01	2.77E-01	2.21E+03	1.10E+01	6.64E-05	7.66E+04	1.06E+03	1.53E-02	6.69E-04	1.44E-09	2.77E-07	1.26E-07	1.35E-07	3.35E-09
14234-35-6	Antimony-125	1.16E+05	3.07E-01	4.06E-01	6.14E+03	7.68E+01	1.85E-04	1.11E+05	1.11E+03	2.23E-02	7.02E-04	2.19E-09	4.06E-07	8.64E-06	1.39E-06	3.51E-09
15715-94-3	Samarium-151	1.42E+06	3.75E+00	4.94E+00	8.52E+04	6.22E+01	2.56E-03	1.35E+06	1.04E+04	2.69E-01	6.52E-03	2.68E-08	4.94E-06	9.80E-08	1.58E-08	3.26E-08
15832-50-5	Tin-126	6.15E+02	1.76E-03	2.01E-03	9.68E+01	4.84E-01	2.91E-06	5.23E+02	4.36E+00	1.05E-04	2.74E-06	1.26E-11	2.01E-09	5.51E-09	5.56E-10	1.37E-11
10098-97-2	Strontium-90	3.62E+07	9.56E+01	1.26E+02	2.12E+06	2.12E+04	6.39E-02	3.44E+07	3.44E+05	6.89E+00	2.17E-01	6.83E-07	1.26E-04	2.42E-04	4.39E-05	1.08E-06
14133-76-7	Technetium-99	6.89E+04	4.78E-01	3.12E-01	2.49E+04	8.30E+03	8.52E-04	7.79E+04	2.60E+04	1.58E-02	1.64E-02	3.42E-09	3.12E-07	6.29E-04	1.85E-05	8.20E-08
7440-29-1	Thorium-232	8.56E+00	3.65E-05	3.06E-05	1.95E-01	7.78E-04	5.48E-09	8.51E+00	1.18E-01	1.70E-06	7.38E-08	2.61E-13	3.06E-11	1.09E-12	1.65E-13	3.69E-13
13968-55-3	Uranium-233	6.93E+02	2.93E-03	2.50E-03	5.32E+00	2.66E-02	1.60E-07	6.97E+02	9.67E+00	1.39E-04	6.09E-06	2.09E-11	2.50E-09	3.03E-10	1.23E-09	3.04E-11
13966-29-5	Uranium-234	3.96E+01	1.80E-04	1.35E-04	3.72E+00	1.86E-02	1.12E-07	3.63E+01	5.04E-01	7.27E-06	3.17E-07	1.29E-12	1.35E-10	2.12E-10	6.41E-11	1.59E-12
15117-96-1	Uranium-235	1.01E+00	4.79E-06	3.34E-06	1.46E-01	7.32E-04	4.40E-09	8.74E-01	1.21E-02	1.75E-07	7.14E-09	3.63E-14	3.34E-12	8.35E-12	1.54E-12	3.57E-14
13982-70-2	Uranium-236	1.44E+00	6.98E-06	4.67E-06	2.51E-01	1.25E-03	7.54E-09	1.20E+00	1.67E-02	2.41E-07	9.81E-09	5.28E-14	4.67E-12	1.43E-11	2.12E-12	4.90E-14
7440-61-1	Uranium-238	2.32E+01	1.08E-04	7.78E-05	2.90E+00	1.45E-02	8.73E-08	2.06E+01	2.86E-01	4.11E-06	1.79E-07	7.73E-13	7.78E-11	1.65E-10	3.63E-11	8.93E-13
10098-91-6	Yttrium-90	3.59E+06	9.48E+00	1.25E+01	2.11E+05	2.11E+03	6.34E-03	3.41E+06	3.41E+04	6.83E-01	2.15E-02	6.77E-08	1.25E-05	2.40E-05	4.35E-06	1.07E-07
13967-48-1	Ruthenium-106	3.10E+02	1.29E-03	8.61E-04	2.02E+02	5.18E+01	6.37E-06	1.68E+02	4.31E+01	3.39E-05	2.07E-05	9.22E-12	8.61E-10	1.80E-05	3.32E-08	1.04E-10
13967-70-9	Cesium-134	4.83E+03	1.31E-02	1.07E-02	3.90E-01	1.95E-01	1.44E-08	5.00E+03	1.88E+02	1.00E-03	1.05E-04	9.35E-11	1.07E-08	1.35E-08	1.31E-07	5.27E-10
13981-97-0	Barium-137m	1.61E+07	4.34E+01	3.57E+01	1.29E+03	6.47E+02	4.78E-05	1.66E+07	6.24E+05	3.33E+00	3.50E-01	3.10E-07	3.57E-05	4.49E-05	4.34E-04	1.75E-06
13982-10-0	Plutonium-242	2.74E-01	6.59E-07	9.55E-07	1.11E-02	5.57E-05	3.35E-10	2.63E-01	3.65E-03	5.26E-08	1.67E-10	4.71E-15	9.55E-13	6.34E-13	4.64E-13	0.00E+00
13982-63-3	Radium-226	1.10E-03	5.43E-09	3.95E-09	7.99E-05	1.33E-05	4.41E-10	1.10E-03	8.43E-06	2.57E-10	4.25E-12	0.00E+00	3.95E-15	2.04E-14	0.00E+00	0.00E+00
14158-29-3	Uranium-232	1.18E+00	5.00E-06	4.27E-06	9.09E-03	4.54E-05	2.73E-10	1.19E+00	9.16E-03	2.38E-07	1.04E-08	3.57E-14	4.27E-12	5.18E-13	1.17E-12	5.20E-14
14331-85-2	Protactinium-231	7.77E-01	3.84E-06	2.79E-06	5.65E-02	4.13E-05	3.12E-07	7.76E-01	5.97E-03	1.82E-07	3.00E-09	2.74E-14	2.79E-12	1.62E-12	9.36E-15	1.50E-14
14336-70-0	Nickel-59	2.47E+02	1.02E-03	5.18E-04	1.77E+02	1.99E+00	5.34E-06	7.16E+01	9.39E-01	1.43E-05	5.07E-07	7.31E-12	5.18E-10	8.44E-08	4.43E-10	2.54E-12
14952-40-0	Actinium-227	1.05E+00	5.17E-06	3.76E-06	7.61E-02	5.56E-05	4.20E-07	1.04E+00	8.03E-03	2.44E-07	4.05E-09	3.70E-14	3.76E-12	2.18E-12	1.26E-14	2.02E-14
14993-75-0	Americium-243	2.93E+01	8.32E-05	9.75E-05	4.31E+00	5.38E-02	1.30E-07	2.55E+01	4.40E-01	5.10E-06	2.77E-07	5.94E-13	9.75E-11	6.13E-10	5.58E-11	1.38E-12
15262-20-1	Radium-228	1.72E+00	8.53E-06	6.20E-06	1.26E-01	2.09E-02	6.92E-07	1.72E+00	1.32E-02	4.03E-07	6.67E-09	6.09E-14	6.20E-12	3.21E-11	2.08E-14	3.34E-14
15510-73-3	Curium-242	3.76E+01	1.58E-04	1.36E-04	6.54E-02	3.27E-04	1.96E-09	3.80E+01	2.93E-01	7.61E-06	3.32E-07	1.13E-12	1.36E-10	3.72E-12	3.74E-11	1.66E-12
15594-54-4	Thorium-229	3.01E-01	1.28E-06	1.08E-06	6.85E-03	2.74E-05	3.67E-08	3.00E-01	2.30E-03	6.00E-08	2.60E-09	9.17E-15	1.08E-12	2.21E-13	3.51E-15	1.30E-14
15751-77-6	Zirconium-93	7.49E+02	3.71E-03	2.69E-03	5.45E+01	1.82E-01	3.01E-04	7.48E+02	9.24E+00	1.75E-04	2.90E-06	2.65E-11	2.69E-09	6.85E-09	1.72E-09	1.45E-11
7440-03-1	Niobium-93m	4.54E+02	2.25E-03	1.63E-03	3.31E+01	3.31E-02	1.82E-04	4.54E+02	3.49E+00	1.06E-04	1.76E-06	1.61E-11	1.63E-09	9.57E-10	9.47E-12	8.79E-12
14336-66-4	Cadmium-113m	6.29E+02	1.86E-03	2.41E-03	5.27E+01	5.27E+00	1.59E-06	6.54E+02	6.54E+01	1.31E-04	4.15E-05	1.33E-11	2.41E-09	2.06E-07	2.32E-08	2.08E-10
15758-45-9	Selenium-79	1.37E+01	5.72E-05	3.82E-05	8.96E+00	5.27E+00	2.83E-07	7.45E+00	3.55E+00	1.50E-06	9.19E-07	4.09E-13	3.82E-11	3.29E-08	3.07E-11	4.60E-12
	Total	1.04E+08	4.91E+02	1.38E+02	2.72E+06	3.21E+04	5.86E-02	1.04E+08	2.39E+06	2.51E+01	7.81E+01	1.82E+00	5.86E-03	4.02E+02	5.18E+02	1.70E-03

Table 20 WTP PIC Emissions

CAS Registry Number	Compound	PT Stack Flowrate (g/sec)	LAW Stack Flowrate (g/sec)	HLW Stack Flowrate (g/sec)
1746-01-6	2,3,7,8-Tetrachlorodibenzo(p)dioxin (TCDD)	3.31E-11	4.58E-11	3.38E-11
19408-74-3	1,2,3,7,8,9-Hexachlorodibenzo(p)dioxin	2.81E-11	3.90E-11	2.87E-11
3268-87-9	Octachlorodibenzo(p)dioxin	1.41E-10	1.95E-10	1.44E-10
35822-46-9	1,2,3,4,6,7,8-Heptachlorodibenzo(p)dioxin	5.63E-11	7.79E-11	5.74E-11
39001-02-0	Octachlorodibenzofuran	5.25E-10	7.27E-10	5.36E-10
39227-28-6	1,2,3,4,7,8-Hexachlorodibenzo(p)dioxin	2.81E-11	3.90E-11	2.87E-11
40321-76-4	1,2,3,7,8-Pentachlorodibenzo(p)dioxin	2.81E-11	3.90E-11	2.87E-11
51207-31-9	2,3,7,8-Tetrachlorodibenzofuran	2.24E-09	3.10E-09	2.29E-09
55673-89-7	1,2,3,4,7,8,9-Heptachlorodibenzofuran	2.02E-10	2.80E-10	2.06E-10
57117-31-4	2,3,4,7,8-Pentachlorodibenzofuran	2.89E-09	4.00E-09	2.95E-09
57117-41-6	1,2,3,7,8-Pentachlorodibenzofuran	3.14E-09	4.34E-09	3.20E-09
57117-44-9	1,2,3,6,7,8-Hexachlorodibenzofuran	1.42E-09	1.97E-09	1.45E-09
57653-85-7	1,2,3,6,7,8-Hexachlorodibenzo(p)dioxin	2.81E-11	3.90E-11	2.87E-11
60851-34-5	2,3,4,6,7,8-Hexachlorodibenzofuran	7.30E-10	1.01E-09	7.44E-10
67562-39-4	1,2,3,4,6,7,8-Heptachlorodibenzofuran	4.16E-09	5.76E-09	4.24E-09
70648-26-9	1,2,3,4,7,8-Hexachlorodibenzofuran	2.90E-09	4.01E-09	2.96E-09
72918-21-9	1,2,3,7,8,9-Hexachlorodibenzofuran	6.40E-11	8.86E-11	6.53E-11
192-97-2	Benzo(e)pyrene	5.40E-06	7.48E-06	5.51E-06
205-82-3	Benzo(j)fluoranthene	5.40E-06	7.48E-06	5.51E-06
205-99-2	Benzo(b)fluoranthene	5.40E-06	7.48E-06	5.51E-06
207-08-9	Benzo(k)fluoranthene	5.40E-06	7.48E-06	5.51E-06
218-01-9	Chrysene	5.40E-06	7.48E-06	5.51E-06
5385-75-1	Dibenzo(a,e)fluoranthene	5.40E-06	7.48E-06	5.51E-06
56-55-3	Benzo(a)anthracene	5.40E-06	7.48E-06	5.51E-06
91-57-6	2-Methylnaphthalene	5.40E-06	7.48E-06	5.51E-06
100-02-7	4-Nitrophenol	2.70E-05	3.74E-05	2.75E-05
100-25-4	1,4-Dinitrobenzene	2.70E-05	3.74E-05	2.75E-05
100-51-6	Benzyl alcohol	2.70E-05	3.74E-05	2.75E-05
100-52-7	Benzaldehyde	2.70E-05	3.74E-05	2.75E-05
101-77-9	4,4-Methylenedianiline	2.70E-05	3.74E-05	2.75E-05
103-33-3	Azobenzene	2.70E-05	3.74E-05	2.75E-05
105-67-9	2,4-Dimethylphenol	2.70E-05	3.74E-05	2.75E-05
106-44-5	p-Cresol (4-Methyl phenol)	2.70E-05	3.74E-05	2.75E-05
106-47-8	p-Chloroaniline	2.70E-05	3.74E-05	2.75E-05
106-49-0	p-Toluidine	2.70E-05	3.74E-05	2.75E-05
106-51-4	Quinone	2.70E-05	3.74E-05	2.75E-05
107-98-2	Propylene gylcol monomethyl ether	2.70E-05	3.74E-05	2.75E-05
108-60-1	Dichloroisopropyl ether	2.70E-05	3.74E-05	2.75E-05
109-86-4	2-Methoxyethanol	2.70E-05	3.74E-05	2.75E-05
110-80-5	2-Ethoxyethanol	2.70E-05	3.74E-05	2.75E-05
111-15-9	Ethylene glycol monoethyl ether acetate	2.70E-05	3.74E-05	2.75E-05
111-44-4	Bis(2-chloroethyl) ether	2.70E-05	3.74E-05	2.75E-05
111-91-1	Bis(2-chloroethoxy)methane	2.70E-05	3.74E-05	2.75E-05
1120-71-4	1,3-Propane sultone	2.70E-05	3.74E-05	2.75E-05
118-74-1	Hexachlorobenzene	2.70E-05	3.74E-05	2.75E-05
119-90-4	3,3'-Dimethoxybenzidine (ortol-dianisidine)	2.70E-05	3.74E-05	2.75E-05
121-14-2	2,4-Dinitrotoluene	2.70E-05	3.74E-05	2.75E-05
122-66-7	1,2-Diphenylhydrazine	2.70E-05	3.74E-05	2.75E-05

Table 20 WTP PIC Emissions

CAS Registry Number	Compound	PT Stack Flowrate (g/sec)	LAW Stack Flowrate (g/sec)	HLW Stack Flowrate (g/sec)
123-33-1	Maleic hydrazide	2.70E-05	3.74E-05	2.75E-05
131-11-3	Dimethylphthalate	2.70E-05	3.74E-05	2.75E-05
131-89-5	2-Cyclohexyl-4,6-dinitrophenol	2.70E-05	3.74E-05	2.75E-05
133-06-2	Captan	2.70E-05	3.74E-05	2.75E-05
145-73-3	Endothall	2.70E-05	3.74E-05	2.75E-05
23950-58-5	Pronamide	2.70E-05	3.74E-05	2.75E-05
319-84-6	Hexachlorocyclohexane (Lindane) Alpha BHC	2.70E-05	3.74E-05	2.75E-05
319-85-7	Hexachlorocyclohexane (Lindane) Beta BHC	2.70E-05	3.74E-05	2.75E-05
506-68-3	Cyanogen bromide	2.70E-05	3.74E-05	2.75E-05
510-15-6	Chlorobenzilate	2.70E-05	3.74E-05	2.75E-05
51-28-5	2,4-Dinitrophenol	2.70E-05	3.74E-05	2.75E-05
51-79-6	Ethyl Carbamate (urethane)	2.70E-05	3.74E-05	2.75E-05
528-29-0	o-Dinitrobenzene	2.70E-05	3.74E-05	2.75E-05
532-27-4	2-Chloroacetophenone	2.70E-05	3.74E-05	2.75E-05
534-52-1	4,6-Dinitro-o-cresol	5.31E-04	7.36E-04	5.42E-04
57-24-9	Strychnine	2.70E-05	3.74E-05	2.75E-05
57-74-9	Chlordane	2.70E-05	3.74E-05	2.75E-05
584-84-9	2,4-Toluene diisocyante	2.70E-05	3.74E-05	2.75E-05
58-89-9	gamma-BHC (Lindane)	2.70E-05	3.74E-05	2.75E-05
60-11-7	Dimethyl aminoazobenzene	2.70E-05	3.74E-05	2.75E-05
606-20-2	2,6-Dinitrotoluene	2.70E-05	3.74E-05	2.75E-05
608-93-5	Pentachlorobenzene	2.70E-05	3.74E-05	2.75E-05
62-50-0	Ethyl methanesulfonate	2.70E-05	3.74E-05	2.75E-05
62-53-3	Aniline	2.70E-05	3.74E-05	2.75E-05
65-85-0	Benzoic acid	2.70E-05	3.74E-05	2.75E-05
70-30-4	Hexachlorophene	2.70E-05	3.74E-05	2.75E-05
72-43-5	Methoxychlor	2.70E-05	3.74E-05	2.75E-05
72-55-9	4,4'-DDE	2.70E-05	3.74E-05	2.75E-05
76-44-8	Heptachlor	2.70E-05	3.74E-05	2.75E-05
765-34-4	Glycidylaldehyde	2.70E-05	3.74E-05	2.75E-05
77-47-4	Hexachlorocyclopentadiene	2.70E-05	3.74E-05	2.75E-05
77-78-1	Dimethyl sulfate	2.70E-05	3.74E-05	2.75E-05
822-06-0	Hexamethylene-1,5-diisocyanate	2.70E-05	3.74E-05	2.75E-05
823-40-5	Toluene-2,6-diamine	2.70E-05	3.74E-05	2.75E-05
82-68-8	Pentachloronitrobenzene (PCBN)	2.70E-05	3.74E-05	2.75E-05
85-44-9	Phthalic anhydride	2.70E-05	3.74E-05	2.75E-05
87-86-5	Pentachlorophenol	2.70E-05	3.74E-05	2.75E-05
88-74-4	o-Nitroaniline (2-Nitroaniline)	2.70E-05	3.74E-05	2.75E-05
90-04-0	o-Anisidine	2.70E-05	3.74E-05	2.75E-05
91-94-1	3,3'-Dichlorobenzidine	2.70E-05	3.74E-05	2.75E-05
94-59-7	Safrole	2.70E-05	3.74E-05	2.75E-05
94-75-7	2,4-D and esters (!60C typed)	2.70E-05	3.74E-05	2.75E-05
95-94-3	1,2,4,5-Tetrachlorobenzene	2.70E-05	3.74E-05	2.75E-05
96-12-8	1,2-Dibromo-3-chloropropane	2.70E-05	3.74E-05	2.75E-05
96-45-7	Ethylene thiourea	2.70E-05	3.74E-05	2.75E-05
98-01-1	Furfural	2.70E-05	3.74E-05	2.75E-05
98-07-7	Benzotrichloride	2.70E-05	3.74E-05	2.75E-05
99-35-4	1,3,5-Trinitrobenzene	2.70E-05	3.74E-05	2.75E-05

Table 20 WTP PIC Emissions

CAS Registry Number	Compound	PT Stack Flowrate (g/sec)	LAW Stack Flowrate (g/sec)	HLW Stack Flowrate (g/sec)
99-65-0	1,3-Dinitrobenzene	2.70E-05	3.74E-05	2.75E-05
100-44-7	Benzyl chloride	3.60E-06	4.98E-06	3.67E-06
103-65-1	n-Propyl benzene (Isocumene)	3.60E-06	4.98E-06	3.67E-06
104-51-8	n-Butylbenzene	3.60E-06	4.98E-06	3.67E-06
106-43-4	4-Chlorotoluene (p-Tolyl chloride)	3.60E-06	4.98E-06	3.67E-06
106-89-8	Epichlorohydrin (1-chloro-2,3-epoxypropane)	3.60E-06	4.98E-06	3.67E-06
107-19-7	Propargyl alcohol	3.60E-06	4.98E-06	3.67E-06
107-21-1	Ethylene glycol	3.60E-06	4.98E-06	3.67E-06
108-67-8	1,3,5-Trimethyl benzene	3.60E-06	4.98E-06	3.67E-06
108-86-1	Bromobenzene (Phenyl bromide)	3.60E-06	4.98E-06	3.67E-06
109-77-3	Malononitrile	3.60E-06	4.98E-06	3.67E-06
124-48-1	Chlorodibromomethane	3.60E-06	4.98E-06	3.67E-06
135-98-8	sec-Butylbenzene	3.60E-06	4.98E-06	3.67E-06
156-59-2	cis-1,2-Dichloroethene	3.60E-06	4.98E-06	3.67E-06
25013-15-4	Methyl styrene (mixed isomers)	3.60E-06	4.98E-06	3.67E-06
41851-50-7	Chlorocyclopentadiene	3.60E-06	4.98E-06	3.67E-06
460-19-5	Cyanogen	3.60E-06	4.98E-06	3.67E-06
506-77-4	Cyanogen chloride	3.60E-06	4.98E-06	3.67E-06
540-73-8	1,2-Dimethylhydrazine	3.60E-06	4.98E-06	3.67E-06
542-75-6	1,3-Dichloropropene	3.60E-06	4.98E-06	3.67E-06
542-88-1	Dichloromethyl ether	3.60E-06	4.98E-06	3.67E-06
593-60-2	Bromoethene	3.60E-06	4.98E-06	3.67E-06
61626-71-9	Dichloropentadiene	3.60E-06	4.98E-06	3.67E-06
74-88-4	Iodomethane (Methyl iodide)	3.60E-06	4.98E-06	3.67E-06
74-95-3	Methylene bromide	3.60E-06	4.98E-06	3.67E-06
75-25-2	Bromoform	3.60E-06	4.98E-06	3.67E-06
75-29-6	2-Chloropropane	3.60E-06	4.98E-06	3.67E-06
75-44-5	Phosgene	3.60E-06	4.98E-06	3.67E-06
76-01-7	Pentachloroethane	3.60E-06	4.98E-06	3.67E-06
764-41-0	1,4-Dichloro-2-butene	3.60E-06	4.98E-06	3.67E-06
80-62-6	Methyl methacrylate	3.60E-06	4.98E-06	3.67E-06
87-61-6	1,2,3-Trichlorobenzene	3.60E-06	4.98E-06	3.67E-06
924-16-3	N-Nitrosodi-n-butylamine	3.60E-06	4.98E-06	3.67E-06
95-53-4	o-Toluidine	3.60E-06	4.98E-06	3.67E-06
95-63-6	1,2,4-Trimethyl benzene	3.60E-06	4.98E-06	3.67E-06
96-18-4	1,2,3-Trichloropropane	3.60E-06	4.98E-06	3.67E-06
97-63-2	Ethyl methacrylate	3.60E-06	4.98E-06	3.67E-06
98-06-6	tert-Butyl benzene	3.60E-06	4.98E-06	3.67E-06
99-87-6	p-Cymene	3.60E-06	4.98E-06	3.67E-06

Table 21 Air Emissions for Additional Organic COPCs

CAS #	COPC	Feed	Unabated Streams					Abated Streams				
		FRP01 + FRP14	PVP01	PJV04	LMP06	HMP06	PJV32	PVP12	PJV11	LVP18	HOP31	PJV34
		WTP Feed	PT Vessel Vent	PT RFD/PJM	LAW Melter	HLW Melter	HLW PJM/RFD	PT Vessel Vent	PT RFD/PJM	LAW Melter	HLW Melter	HLW PJM/RFD
		g/sec	g/sec	g/sec	g/sec	g/sec	g/sec	g/sec	g/sec	g/sec	g/sec	g/sec
100-40-3	4-Ethenylcyclohexene	2.86E-03	2.86E-03	1.66E-09	0.00E+00	0.00E+00	0.00E+00	5.73E-08	1.66E-09	0.00E+00	0.00E+00	0.00E+00
104-76-7	2-Ethyl-1-hexanol	7.14E-03	1.42E-03	5.73E-09	1.23E-05	4.26E-06	0.00E+00	7.12E-09	5.73E-09	6.48E-07	2.40E-07	0.00E+00
10595-95-6	N-Nitrosomethylethylamine	4.29E-02	3.60E-03	4.47E-08	3.00E-03	5.83E-04	0.00E+00	7.20E-09	4.47E-08	1.51E-04	2.97E-05	0.00E+00
109-74-0	Butanenitrile	1.43E-02	5.94E-03	1.03E-08	1.07E-06	5.50E-07	1.24E-13	1.19E-07	1.03E-08	6.23E-08	3.93E-08	1.24E-13
110-59-8	Pentanenitrile	1.43E-02	5.94E-03	1.03E-08	1.07E-06	5.50E-07	1.24E-13	1.19E-07	1.03E-08	6.23E-08	3.93E-08	1.24E-13
123-72-8	Butanal	7.14E-03	6.33E-03	4.36E-09	4.38E-10	6.95E-10	0.00E+00	3.17E-07	4.36E-09	4.42E-11	1.46E-10	0.00E+00
134-32-7	alpha-Napthylamine	7.14E-03	6.97E-03	4.21E-09	2.59E-12	1.23E-12	0.00E+00	1.39E-08	4.21E-09	1.19E-12	2.05E-12	0.00E+00
589-38-8	3-Hexanone	2.86E-03	2.53E-03	1.74E-09	1.75E-10	2.78E-10	0.00E+00	1.27E-08	1.74E-09	1.77E-11	5.85E-11	0.00E+00
628-73-9	Hexanenitrile	1.43E-02	1.16E-02	8.95E-09	1.44E-08	1.36E-08	0.00E+00	5.82E-08	8.95E-09	1.08E-09	1.66E-09	0.00E+00
75-02-5	Fluoroethene	7.14E-03	7.15E-03	4.14E-09	0.00E+00	0.00E+00	0.00E+00	7.15E-07	4.14E-09	0.00E+00	0.00E+00	0.00E+00
79-46-9	2-Nitropropane	4.29E-02	3.80E-02	2.61E-08	2.63E-09	4.17E-09	0.00E+00	7.60E-07	2.61E-08	2.65E-10	8.78E-10	0.00E+00

Table 22 Radionuclide COPC Air Emissions Comparison

CAS Number	Compound	PVP12 - PT Vessel Vent					PJV11 - PT PJM/RFD				
		Avg Feed	Envelope A	Envelope B	Envelope C	MAX	Avg Feed	Envelope A	Envelope B	Envelope C	MAX
		Ci/yr					Ci/yr				
14596-10-2	Americium-241	5.81E-09	6.71E-11	1.82E-10	3.41E-12	Avg Feed	1.13E-06	7.41E-09	1.08E-07	9.90E-10	Avg Feed
14762-75-5	Carbon-14	1.17E-03	6.61E-05	1.26E-04	1.01E-04	Avg Feed	2.90E-04	1.07E-05	4.48E-05	3.48E-05	Avg Feed
10198-40-0	Cobalt-60	1.08E-09	2.80E-13	5.16E-12	9.02E-13	Avg Feed	1.25E-07	6.19E-12	2.04E-09	5.07E-11	Avg Feed
15757-87-6	Curium-243	1.30E-11	1.34E-14	5.03E-14	0.00E+00	Avg Feed	1.57E-09	1.04E-12	4.50E-12	1.93E-13	Avg Feed
13981-15-2	Curium-244	2.96E-10	2.84E-13	1.04E-12	4.60E-15	Avg Feed	3.57E-08	2.27E-11	9.31E-11	1.35E-12	Avg Feed
10045-97-3	Cesium-137	1.04E-06	1.04E-08	4.70E-08	7.18E-09	Avg Feed	1.20E-04	5.71E-07	7.81E-06	8.56E-07	Avg Feed
14683-23-9	Europium-152	3.14E-11	5.25E-13	1.27E-12	1.67E-14	Avg Feed	6.05E-09	4.49E-11	3.65E-10	5.05E-12	Avg Feed
15585-10-1	Europium-154	3.56E-09	3.32E-11	6.42E-11	2.07E-12	Avg Feed	6.63E-07	3.48E-09	3.81E-08	6.34E-10	Avg Feed
14391-16-3	Europium-155	5.76E-10	1.69E-11	5.66E-11	3.60E-13	Avg Feed	1.00E-07	1.78E-09	3.35E-08	1.14E-10	Avg Feed
10028-17-8	Tritium	8.07E-01	1.62E-01	5.88E-01	5.23E-02	Avg Feed	3.34E-03	3.81E-04	8.24E-04	8.96E-05	Avg Feed
15046-84-1	Iodine-129	1.46E-05	7.45E-06	3.79E-06	3.59E-06	Avg Feed	1.06E-05	2.55E-06	2.59E-06	2.48E-06	Avg Feed
13981-37-8	Nickel-63	6.55E-10	1.05E-10	1.78E-11	1.19E-12	Avg Feed	4.64E-08	1.02E-08	1.07E-08	1.28E-10	Avg Feed
13994-20-2	Neptunium-237	7.90E-12	6.54E-14	9.96E-14	1.78E-14	Avg Feed	9.27E-10	4.09E-12	5.37E-11	3.82E-12	Avg Feed
13981-16-3	Plutonium-238	2.27E-11	4.31E-12	8.69E-13	2.72E-14	Avg Feed	4.41E-09	4.75E-10	4.67E-10	8.90E-12	Avg Feed
15117-48-3	Plutonium-239	2.06E-10	1.22E-11	7.81E-12	1.48E-13	Avg Feed	3.93E-08	1.34E-09	4.19E-09	4.19E-11	Avg Feed
14119-33-6	Plutonium-240	5.43E-11	2.25E-12	2.39E-12	2.62E-14	Avg Feed	1.04E-08	2.47E-10	1.28E-09	7.41E-12	Avg Feed
14119-32-5	Plutonium-241	1.44E-09	2.96E-11	5.31E-11	1.65E-13	Avg Feed	2.77E-07	3.26E-09	2.86E-08	4.68E-11	Avg Feed
14234-35-6	Antimony-125	2.19E-09	1.10E-12	2.42E-11	6.17E-14	Avg Feed	4.06E-07	3.60E-11	4.97E-09	4.73E-12	Avg Feed
15715-94-3	Samarium-151	2.68E-08	4.78E-10	1.05E-09	1.37E-10	Avg Feed	4.94E-06	1.61E-08	5.28E-07	1.13E-08	Avg Feed
15832-50-5	Tin-126	1.26E-11	8.80E-14	5.33E-13	2.45E-14	Avg Feed	2.01E-09	2.95E-12	2.76E-10	2.01E-12	Avg Feed
10098-97-2	Strontium-90	6.83E-07	3.57E-08	3.16E-08	1.16E-09	Avg Feed	1.26E-04	3.90E-06	1.87E-05	3.85E-07	Avg Feed
14133-76-7	Technetium-99	3.42E-09	8.14E-12	2.13E-11	6.74E-12	Avg Feed	3.12E-07	1.87E-10	8.80E-10	3.00E-10	Avg Feed
7440-29-1	Thorium-232	2.61E-13	2.75E-15	0.00E+00	0.00E+00	Avg Feed	3.06E-11	9.87E-14	3.57E-14	1.43E-14	Avg Feed
13968-55-3	Uranium-233	2.09E-11	7.87E-15	0.00E+00	5.03E-15	Avg Feed	2.50E-09	1.83E-13	5.03E-13	1.27E-12	Avg Feed
13966-29-5	Uranium-234	1.29E-12	2.04E-14	6.35E-15	1.04E-15	Avg Feed	1.35E-10	1.21E-12	3.54E-12	2.64E-13	Avg Feed
15117-96-1	Uranium-235	3.63E-14	0.00E+00	0.00E+00	0.00E+00	Avg Feed	3.34E-12	2.86E-14	1.44E-13	1.11E-14	Avg Feed
13982-70-2	Uranium-236	5.28E-14	1.55E-15	0.00E+00	0.00E+00	Avg Feed	4.67E-12	7.68E-14	4.14E-13	9.46E-15	Avg Feed
7440-61-1	Uranium-238	7.73E-13	1.64E-14	4.46E-15	0.00E+00	Avg Feed	7.78E-11	9.48E-13	2.49E-12	2.36E-13	Avg Feed
10098-91-6	Yttrium-90	6.77E-08	7.57E-09	4.21E-09	1.76E-09	Avg Feed	1.25E-05	8.28E-07	2.50E-06	5.86E-07	Avg Feed

Table 22 Radionuclide COPC Air Emissions Comparison

CAS Number	Compound	LVP18 - LAW Melter					HOP31 - HLW Melter				
		Avg Feed	Envelope A	Envelope B	Envelope C	MAX	Avg Feed	Envelope A	Envelope B	Envelope C	MAX
		Ci/yr					Ci/yr				
14596-10-2	Americium-241	9.42E-07	3.94E-13	1.31E-11	5.01E-13	Avg Feed	6.88E-07	2.01E-13	5.58E-13	1.35E-14	Avg Feed
14762-75-5	Carbon-14	1.33E+02	5.60E+00	1.46E+01	1.19E+01	Avg Feed	2.56E+01	1.74E-01	1.03E-01	2.13E-01	Avg Feed
10198-40-0	Cobalt-60	3.44E-07	2.01E-12	2.35E-12	5.62E-13	Avg Feed	3.77E-07	0.00E+00	4.25E-14	0.00E+00	Avg Feed
15757-87-6	Curium-243	4.30E-11	0.00E+00	4.86E-14	0.00E+00	Avg Feed	7.75E-10	0.00E+00	0.00E+00	0.00E+00	Avg Feed
13981-15-2	Curium-244	1.02E-09	5.07E-15	1.00E-12	0.00E+00	Avg Feed	1.76E-08	0.00E+00	0.00E+00	0.00E+00	Avg Feed
10045-97-3	Cesium-137	1.51E-04	2.84E-10	9.92E-11	5.26E-10	Avg Feed	1.29E-03	2.38E-10	1.11E-09	1.78E-10	Avg Feed
14683-23-9	Europium-152	2.81E-09	1.61E-12	1.47E-12	1.87E-15	Avg Feed	2.95E-09	1.08E-15	1.68E-15	0.00E+00	Avg Feed
15585-10-1	Europium-154	5.82E-07	2.09E-11	3.98E-12	2.12E-13	Avg Feed	3.20E-07	9.29E-14	1.97E-13	8.73E-15	Avg Feed
14391-16-3	Europium-155	1.68E-07	1.03E-11	3.52E-12	2.68E-14	Avg Feed	4.74E-08	4.76E-14	1.74E-13	1.58E-15	Avg Feed
10028-17-8	Tritium	2.73E+01	5.31E+00	1.83E+01	1.78E+00	Avg Feed	3.08E+02	1.85E+01	9.03E+00	2.24E+00	Avg Feed
15046-84-1	Iodine-129	3.28E-02	4.33E-05	1.98E-05	1.92E-05	Avg Feed	9.91E-04	2.39E-05	3.45E-06	2.01E-05	Avg Feed
13981-37-8	Nickel-63	1.12E-05	1.64E-10	1.43E-13	4.06E-13	Avg Feed	3.40E-08	3.41E-13	5.23E-14	1.01E-15	Avg Feed
13994-20-2	Neptunium-237	2.96E-10	1.26E-13	8.36E-15	4.50E-15	Avg Feed	4.54E-10	0.00E+00	0.00E+00	0.00E+00	Avg Feed
13981-16-3	Plutonium-238	1.67E-09	1.24E-13	1.84E-13	1.23E-15	Avg Feed	2.15E-09	1.29E-14	2.39E-15	0.00E+00	Avg Feed
15117-48-3	Plutonium-239	2.31E-08	8.11E-13	1.66E-12	2.44E-14	Avg Feed	1.91E-08	3.64E-14	2.15E-14	0.00E+00	Avg Feed
14119-33-6	Plutonium-240	5.99E-09	1.69E-13	5.07E-13	4.32E-15	Avg Feed	5.04E-09	6.68E-15	6.58E-15	0.00E+00	Avg Feed
14119-32-5	Plutonium-241	1.26E-07	1.52E-12	1.13E-11	2.75E-14	Avg Feed	1.35E-07	8.81E-14	1.46E-13	0.00E+00	Avg Feed
14234-35-6	Antimony-125	8.64E-06	2.24E-11	4.05E-11	1.44E-13	Avg Feed	1.39E-06	0.00E+00	1.27E-14	0.00E+00	Avg Feed
15715-94-3	Samarium-151	9.80E-08	4.50E-09	4.04E-10	9.73E-11	Avg Feed	1.58E-08	6.68E-14	2.68E-12	6.46E-14	Avg Feed
15832-50-5	Tin-126	5.51E-09	8.26E-13	1.81E-13	1.75E-14	Avg Feed	5.56E-10	0.00E+00	1.41E-15	0.00E+00	Avg Feed
10098-97-2	Strontium-90	2.42E-04	2.50E-09	9.37E-10	4.12E-11	Avg Feed	4.39E-05	1.39E-10	7.00E-11	3.88E-12	Avg Feed
14133-76-7	Technetium-99	6.29E-04	9.56E-09	3.33E-08	1.03E-08	Avg Feed	1.85E-05	1.65E-13	3.93E-14	1.29E-13	Avg Feed
7440-29-1	Thorium-232	1.09E-12	1.53E-14	0.00E+00	0.00E+00	Avg Feed	1.65E-13	0.00E+00	0.00E+00	0.00E+00	Avg Feed
13968-55-3	Uranium-233	3.03E-10	5.45E-14	0.00E+00	0.00E+00	Avg Feed	1.23E-09	0.00E+00	0.00E+00	0.00E+00	Avg Feed
13966-29-5	Uranium-234	2.12E-10	4.68E-14	0.00E+00	0.00E+00	Avg Feed	6.41E-11	0.00E+00	0.00E+00	0.00E+00	Avg Feed
15117-96-1	Uranium-235	8.35E-12	1.89E-15	0.00E+00	0.00E+00	Avg Feed	1.54E-12	0.00E+00	0.00E+00	0.00E+00	Avg Feed
13982-70-2	Uranium-236	1.43E-11	2.73E-15	0.00E+00	0.00E+00	Avg Feed	2.12E-12	0.00E+00	0.00E+00	0.00E+00	Avg Feed
7440-61-1	Uranium-238	1.65E-10	3.88E-14	0.00E+00	0.00E+00	Avg Feed	3.63E-11	0.00E+00	0.00E+00	0.00E+00	Avg Feed
10098-91-6	Yttrium-90	2.40E-05	5.30E-10	1.25E-10	6.27E-11	Avg Feed	4.35E-06	2.94E-11	9.32E-12	5.91E-12	Avg Feed

Table 22 Radionuclide COPC Air Emissions Comparison

CAS Number	Compound	PJV34 - HLW PJM/RFD				
		Avg Feed	Envelope A	Envelope B	Envelope C	MAX
		Ci/yr				
14596-10-2	Americium-241	1.70E-08	3.90E-11	6.94E-09	1.29E-11	Avg Feed
14762-75-5	Carbon-14	0.00E+00	0.00E+00	0.00E+00	0.00E+00	Avg Feed
10198-40-0	Cobalt-60	1.52E-09	3.72E-15	1.27E-10	1.75E-13	Avg Feed
15757-87-6	Curium-243	1.92E-11	5.87E-15	1.50E-13	1.35E-15	Avg Feed
13981-15-2	Curium-244	4.36E-10	1.19E-13	3.04E-12	1.49E-14	Avg Feed
10045-97-3	Cesium-137	5.89E-06	1.91E-08	6.66E-06	8.24E-08	Env B
14683-23-9	Europium-152	7.30E-11	2.10E-13	2.10E-11	6.63E-14	Avg Feed
15585-10-1	Europium-154	7.92E-09	1.80E-11	2.45E-09	8.34E-12	Avg Feed
14391-16-3	Europium-155	1.17E-09	9.23E-12	2.16E-09	1.51E-12	Env B
10028-17-8	Tritium	1.98E-04	1.34E-05	1.70E-05	1.47E-06	Avg Feed
15046-84-1	Iodine-129	6.26E-08	1.00E-08	1.23E-07	5.53E-08	Env B
13981-37-8	Nickel-63	2.27E-10	7.56E-11	7.30E-10	1.08E-12	Env B
13994-20-2	Neptunium-237	1.12E-11	1.98E-14	3.47E-12	4.73E-14	Avg Feed
13981-16-3	Plutonium-238	5.33E-11	2.50E-12	2.98E-11	1.19E-13	Avg Feed
15117-48-3	Plutonium-239	4.73E-10	7.06E-12	2.67E-10	5.42E-13	Avg Feed
14119-33-6	Plutonium-240	1.25E-10	1.30E-12	8.18E-11	9.58E-14	Avg Feed
14119-32-5	Plutonium-241	3.35E-09	1.71E-11	1.82E-09	6.06E-13	Avg Feed
14234-35-6	Antimony-125	3.51E-09	1.40E-14	1.81E-10	1.28E-14	Avg Feed
15715-94-3	Samarium-151	3.26E-08	1.30E-11	3.34E-08	6.17E-11	Env B
15832-50-5	Tin-126	1.37E-11	2.49E-15	1.75E-11	1.06E-14	Env B
10098-97-2	Strontium-90	1.08E-06	2.66E-08	7.77E-07	3.31E-09	Avg Feed
14133-76-7	Technetium-99	8.20E-08	1.33E-11	2.41E-10	6.06E-11	Avg Feed
7440-29-1	Thorium-232	3.69E-13	0.00E+00	0.00E+00	0.00E+00	Avg Feed
13968-55-3	Uranium-233	3.04E-11	0.00E+00	1.15E-15	1.37E-14	Avg Feed
13966-29-5	Uranium-234	1.59E-12	6.08E-15	2.33E-13	1.79E-15	Avg Feed
15117-96-1	Uranium-235	3.57E-14	0.00E+00	0.00E+00	0.00E+00	Avg Feed
13982-70-2	Uranium-236	4.90E-14	0.00E+00	0.00E+00	0.00E+00	Avg Feed
7440-61-1	Uranium-238	8.93E-13	4.74E-15	1.63E-13	1.60E-15	Avg Feed
10098-91-6	Yttrium-90	1.07E-07	5.65E-09	1.04E-07	5.04E-09	Avg Feed

Table 23 Inorganic COPCs Air Emissions Comparison

CAS Number	Compound	PVP12 - PT Vessel Vent				
		Avg Feed	Envelope A	Envelope B	Envelope C	MAX
		g/sec				
7440-22-4	Silver	0.00E+00	0.00E+00	0.00E+00	0.00E+00	Avg Feed
7429-90-5	Aluminum	4.29E-13	4.22E-14	2.03E-14	1.78E-14	Avg Feed
7440-38-2	Arsenic	0.00E+00	0.00E+00	0.00E+00	0.00E+00	Avg Feed
7440-42-8	Boron	1.92E-14	2.49E-15	0.00E+00	0.00E+00	Avg Feed
7440-39-3	Barium	0.00E+00	0.00E+00	0.00E+00	0.00E+00	Avg Feed
7440-69-9	Bismuth	1.76E-15	0.00E+00	0.00E+00	0.00E+00	Avg Feed
7440-70-2	Calcium	1.98E-13	3.48E-14	2.92E-15	3.29E-15	Avg Feed
7440-43-9	Cadmium	1.40E-15	0.00E+00	0.00E+00	0.00E+00	Avg Feed
16887-00-6	Chloride	6.26E-14	8.67E-15	0.00E+00	5.72E-15	Avg Feed
18540-29-9	Chromium (hexavalent)	1.24E-14	0.00E+00	0.00E+00	0.00E+00	Avg Feed
7440-50-8	Copper	0.00E+00	0.00E+00	0.00E+00	0.00E+00	Avg Feed
16984-48-8	Flouride	2.11E-14	9.68E-15	2.61E-15	1.72E-15	Avg Feed
7439-89-6	Iron	9.69E-14	3.87E-14	6.40E-15	0.00E+00	Avg Feed
7439-97-6	Mercury	2.92E-07	6.56E-08	3.24E-10	0.00E+00	Avg Feed
7440-09-7	Potassium	1.49E-13	1.08E-13	6.14E-15	2.53E-15	Avg Feed
7439-93-2	Lithium	0.00E+00	0.00E+00	0.00E+00	0.00E+00	Avg Feed
7439-95-4	Magnesium	1.83E-14	5.80E-15	0.00E+00	0.00E+00	Avg Feed
7439-96-5	Manganese	8.67E-15	4.45E-15	0.00E+00	2.77E-15	Avg Feed
7440-23-5	Sodium	2.40E-12	5.42E-13	1.65E-13	3.32E-13	Avg Feed
7440-02-0	Nickel	3.12E-15	0.00E+00	0.00E+00	0.00E+00	Avg Feed
14797-65-0	Nitrite	9.33E-13	1.33E-13	8.58E-14	9.30E-14	Avg Feed
14797-55-8	Nitrate	2.51E-12	5.87E-13	1.25E-13	3.81E-13	Avg Feed
14280-30-9	Hydroxide	1.89E-12	2.56E-13	4.53E-14	6.82E-14	Avg Feed
7723-14-0	Phosphorous	0.00E+00	0.00E+00	0.00E+00	0.00E+00	Avg Feed
7439-92-1	Lead	3.56E-15	2.61E-15	0.00E+00	0.00E+00	Avg Feed
14265-44-2	Phosphate	7.99E-14	1.45E-14	1.92E-15	7.34E-15	Avg Feed
63705-05-5	Total Sulfur	0.00E+00	0.00E+00	0.00E+00	0.00E+00	Avg Feed
7440-21-3	Silicon	8.19E-14	5.23E-15	1.28E-15	0.00E+00	Avg Feed
14808-79-8	Sulfate	9.69E-14	1.62E-14	2.28E-14	2.11E-14	Avg Feed
7440-24-6	Strontium (total)	0.00E+00	0.00E+00	0.00E+00	1.30E-14	Env C
7440-66-6	Zinc	4.41E-15	0.00E+00	0.00E+00	0.00E+00	Avg Feed
7440-67-7	Zirconium	2.32E-14	0.00E+00	2.05E-15	0.00E+00	Avg Feed
630-08-0	Carbon monoxide	0.00E+00	0.00E+00	0.00E+00	0.00E+00	Avg Feed
10102-43-9	Nitric Oxide	0.00E+00	0.00E+00	0.00E+00	0.00E+00	Avg Feed
10102-44-0	Nitrogen dioxide	0.00E+00	0.00E+00	0.00E+00	0.00E+00	Avg Feed
7446-09-5	Sulfur dioxide	0.00E+00	0.00E+00	0.00E+00	0.00E+00	Avg Feed
7664-41-7	Ammonia/Ammonium	2.81E-06	7.26E-06	2.12E-04	6.07E-05	Env B
7647-01-0	Hydrochloric Acid	0.00E+00	0.00E+00	0.00E+00	0.00E+00	Avg Feed
7664-39-3	Hydrofluoric Acid	0.00E+00	0.00E+00	0.00E+00	0.00E+00	Avg Feed
7697-37-2	Nitric Acid	0.00E+00	4.45E-06	3.42E-06	4.28E-06	Env A

Table 23 Inorganic COPCs Air Emissions Comparison

CAS Number	Compound	PJV11 - PT RFD/PJM				
		Avg Feed	Envelope A	Envelope B	Envelope C	MAX
		g/sec				
7440-22-4	Silver	7.19E-14	0.00E+00	8.19E-15	0.00E+00	Avg Feed
7429-90-5	Aluminum	2.08E-11	1.90E-12	1.74E-12	9.19E-13	Avg Feed
7440-38-2	Arsenic	1.63E-14	0.00E+00	2.84E-15	0.00E+00	Avg Feed
7440-42-8	Boron	4.80E-13	5.87E-14	3.69E-14	1.08E-14	Avg Feed
7440-39-3	Barium	6.51E-14	2.40E-14	7.93E-15	1.86E-15	Avg Feed
7440-69-9	Bismuth	3.26E-13	4.69E-15	2.35E-15	3.64E-15	Avg Feed
7440-70-2	Calcium	5.15E-13	1.70E-13	7.24E-14	7.82E-14	Avg Feed
7440-43-9	Cadmium	2.53E-13	3.55E-15	2.61E-14	3.83E-15	Avg Feed
16887-00-6	Chloride	2.59E-12	2.35E-13	3.54E-14	2.48E-13	Avg Feed
18540-29-9	Chromium (hexavalent)	7.21E-13	5.29E-14	5.27E-14	4.90E-14	Avg Feed
7440-50-8	Copper	2.95E-14	6.23E-15	9.28E-15	2.11E-15	Avg Feed
16984-48-8	Flouride	1.97E-12	3.06E-13	1.55E-13	9.66E-14	Avg Feed
7439-89-6	Iron	9.78E-12	2.84E-12	3.52E-12	3.57E-14	Avg Feed
7439-97-6	Mercury	1.65E-07	3.96E-08	7.51E-10	0.00E+00	Avg Feed
7440-09-7	Potassium	5.89E-12	3.13E-12	3.48E-13	1.44E-13	Avg Feed
7439-93-2	Lithium	4.36E-14	5.50E-15	2.59E-14	2.21E-15	Avg Feed
7439-95-4	Magnesium	9.58E-14	5.49E-14	2.90E-14	5.68E-15	Avg Feed
7439-96-5	Manganese	9.18E-13	3.50E-13	4.36E-14	8.10E-13	Avg Feed
7440-23-5	Sodium	1.21E-10	1.71E-11	9.73E-12	1.65E-11	Avg Feed
7440-02-0	Nickel	4.46E-13	8.71E-14	2.00E-13	2.88E-14	Avg Feed
14797-65-0	Nitrite	4.58E-11	4.27E-12	4.99E-12	5.29E-12	Avg Feed
14797-55-8	Nitrate	1.03E-10	1.64E-11	7.11E-12	1.87E-11	Avg Feed
14280-30-9	Hydroxide	7.97E-11	1.01E-11	7.69E-12	1.92E-12	Avg Feed
7723-14-0	Phosphorous	0.00E+00	0.00E+00	0.00E+00	0.00E+00	Avg Feed
7439-92-1	Lead	5.65E-13	2.78E-13	1.27E-14	1.42E-14	Avg Feed
14265-44-2	Phosphate	3.98E-12	3.52E-13	9.25E-14	3.43E-13	Avg Feed
63705-05-5	Total Sulfur	0.00E+00	0.00E+00	0.00E+00	0.00E+00	Avg Feed
7440-21-3	Silicon	2.54E-12	7.92E-14	7.04E-14	5.31E-14	Avg Feed
14808-79-8	Sulfate	4.79E-12	4.83E-13	1.25E-12	1.15E-12	Avg Feed
7440-24-6	Strontium (total)	3.47E-14	9.32E-15	8.01E-15	3.83E-12	Env C
7440-66-6	Zinc	1.12E-13	1.46E-14	1.01E-14	4.30E-15	Avg Feed
7440-67-7	Zirconium	2.36E-12	2.42E-15	1.15E-12	8.01E-15	Avg Feed
630-08-0	Carbon monoxide	0.00E+00	0.00E+00	0.00E+00	0.00E+00	Avg Feed
10102-43-9	Nitric Oxide	0.00E+00	0.00E+00	0.00E+00	0.00E+00	Avg Feed
10102-44-0	Nitrogen dioxide	0.00E+00	0.00E+00	0.00E+00	0.00E+00	Avg Feed
7446-09-5	Sulfur dioxide	0.00E+00	0.00E+00	0.00E+00	0.00E+00	Avg Feed
7664-41-7	Ammonia/Ammonium	5.34E-08	4.86E-09	4.78E-07	2.50E-08	Env B
7647-01-0	Hydrochloric Acid	0.00E+00	0.00E+00	0.00E+00	0.00E+00	Avg Feed
7664-39-3	Hydrofluoric Acid	0.00E+00	0.00E+00	0.00E+00	0.00E+00	Avg Feed
7697-37-2	Nitric Acid	0.00E+00	0.00E+00	0.00E+00	0.00E+00	Avg Feed

Table 23 Inorganic COPCs Air Emissions Comparison

CAS Number	Compound	LVP18 - LAW Melter				
		Avg Feed	Envelope A	Envelope B	Envelope C	MAX
		g/sec				
7440-22-4	Silver	4.54E-12	0.00E+00	0.00E+00	0.00E+00	Avg Feed
7429-90-5	Aluminum	2.17E-09	5.77E-13	5.82E-14	3.09E-14	Avg Feed
7440-38-2	Arsenic	7.53E-11	0.00E+00	0.00E+00	0.00E+00	Avg Feed
7440-42-8	Boron	1.68E-08	8.47E-11	2.28E-12	3.67E-12	Avg Feed
7440-39-3	Barium	1.30E-13	0.00E+00	0.00E+00	0.00E+00	Avg Feed
7440-69-9	Bismuth	4.05E-12	0.00E+00	0.00E+00	0.00E+00	Avg Feed
7440-70-2	Calcium	5.14E-09	1.88E-12	2.33E-13	4.27E-14	Avg Feed
7440-43-9	Cadmium	2.17E-11	3.15E-15	2.38E-15	2.82E-15	Avg Feed
16887-00-6	Chloride	2.88E-13	3.21E-15	0.00E+00	2.56E-15	Avg Feed
18540-29-9	Chromium (hexavalent)	1.03E-09	5.87E-14	2.39E-14	2.59E-14	Avg Feed
7440-50-8	Copper	6.81E-13	0.00E+00	0.00E+00	0.00E+00	Avg Feed
16984-48-8	Flouride	7.30E-14	2.84E-15	0.00E+00	0.00E+00	Avg Feed
7439-89-6	Iron	1.36E-09	5.54E-13	1.57E-13	6.87E-14	Avg Feed
7439-97-6	Mercury	7.77E-05	5.72E-08	1.51E-08	3.52E-14	Avg Feed
7440-09-7	Potassium	9.28E-09	1.59E-11	1.08E-13	1.61E-13	Avg Feed
7439-93-2	Lithium	2.81E-09	6.62E-13	2.14E-13	1.22E-13	Avg Feed
7439-95-4	Magnesium	4.32E-09	5.13E-13	4.74E-14	2.15E-14	Avg Feed
7439-96-5	Manganese	1.93E-11	5.44E-15	7.37E-15	6.69E-15	Avg Feed
7440-23-5	Sodium	4.33E-08	1.03E-11	8.15E-13	2.04E-12	Avg Feed
7440-02-0	Nickel	6.59E-11	1.24E-15	0.00E+00	0.00E+00	Avg Feed
14797-65-0	Nitrite	3.99E-12	3.07E-14	2.41E-14	2.63E-14	Avg Feed
14797-55-8	Nitrate	9.82E-12	1.33E-13	3.35E-14	1.04E-13	Avg Feed
14280-30-9	Hydroxide	1.49E-12	4.38E-14	8.82E-14	7.66E-14	Avg Feed
7723-14-0	Phosphorous	0.00E+00	0.00E+00	0.00E+00	0.00E+00	Avg Feed
7439-92-1	Lead	2.12E-11	2.47E-15	0.00E+00	3.47E-15	Avg Feed
14265-44-2	Phosphate	4.35E-09	1.60E-12	2.05E-14	2.62E-13	Avg Feed
63705-05-5	Total Sulfur	7.79E-03	2.04E-06	4.61E-05	2.03E-05	Avg Feed
7440-21-3	Silicon	1.36E-08	1.72E-15	0.00E+00	0.00E+00	Avg Feed
14808-79-8	Sulfate	3.81E-13	3.70E-15	8.68E-15	6.95E-15	Avg Feed
7440-24-6	Strontium (total)	5.54E-14	0.00E+00	0.00E+00	0.00E+00	Avg Feed
7440-66-6	Zinc	3.65E-09	2.02E-12	4.59E-13	1.36E-13	Avg Feed
7440-67-7	Zirconium	1.31E-09	2.17E-12	1.47E-13	8.28E-14	Avg Feed
630-08-0	Carbon monoxide	2.47E-02	2.24E-03	1.93E-03	2.54E-03	Avg Feed
10102-43-9	Nitric Oxide	1.17E+00	3.71E-01	1.40E-01	2.96E-01	Avg Feed
10102-44-0	Nitrogen dioxide	1.64E-01	5.47E-02	2.09E-02	4.36E-02	Avg Feed
7446-09-5	Sulfur dioxide	2.34E-03	1.63E-05	3.69E-04	1.62E-04	Avg Feed
7664-41-7	Ammonia/Ammonium	1.04E-01	1.51E+00	5.73E-01	1.21E+00	Env A
7647-01-0	Hydrochloric Acid	2.02E-02	1.40E-04	8.59E-06	1.12E-04	Avg Feed
7664-39-3	Hydrofluoric Acid	1.46E-03	2.85E-05	5.13E-06	1.93E-06	Avg Feed
7697-37-2	Nitric Acid	0.00E+00	0.00E+00	0.00E+00	0.00E+00	Avg Feed

Table 23 Inorganic COPCs Air Emissions Comparison

CAS Number	Compound	HOP31 - HLW Melter				
		Avg Feed	Envelope A	Envelope B	Envelope C	MAX
		g/sec				
7440-22-4	Silver	3.54E-13	0.00E+00	0.00E+00	0.00E+00	Avg Feed
7429-90-5	Aluminum	4.26E-12	0.00E+00	0.00E+00	0.00E+00	Avg Feed
7440-38-2	Arsenic	3.89E-14	0.00E+00	0.00E+00	0.00E+00	Avg Feed
7440-42-8	Boron	1.00E-11	0.00E+00	0.00E+00	0.00E+00	Avg Feed
7440-39-3	Barium	3.31E-14	0.00E+00	0.00E+00	0.00E+00	Avg Feed
7440-69-9	Bismuth	9.87E-13	0.00E+00	0.00E+00	0.00E+00	Avg Feed
7440-70-2	Calcium	3.55E-13	0.00E+00	0.00E+00	0.00E+00	Avg Feed
7440-43-9	Cadmium	2.44E-12	0.00E+00	0.00E+00	0.00E+00	Avg Feed
16887-00-6	Chloride	7.56E-15	0.00E+00	0.00E+00	0.00E+00	Avg Feed
18540-29-9	Chromium (hexavalent)	7.76E-13	0.00E+00	0.00E+00	0.00E+00	Avg Feed
7440-50-8	Copper	2.46E-14	0.00E+00	0.00E+00	0.00E+00	Avg Feed
16984-48-8	Flouride	4.32E-15	0.00E+00	0.00E+00	0.00E+00	Avg Feed
7439-89-6	Iron	3.25E-12	0.00E+00	0.00E+00	0.00E+00	Avg Feed
7439-97-6	Mercury	1.07E-05	2.24E-06	2.16E-08	4.27E-14	Avg Feed
7440-09-7	Potassium	3.77E-12	0.00E+00	0.00E+00	0.00E+00	Avg Feed
7439-93-2	Lithium	4.40E-12	0.00E+00	0.00E+00	0.00E+00	Avg Feed
7439-95-4	Magnesium	1.14E-13	0.00E+00	0.00E+00	0.00E+00	Avg Feed
7439-96-5	Manganese	6.19E-13	0.00E+00	0.00E+00	0.00E+00	Avg Feed
7440-23-5	Sodium	4.32E-11	0.00E+00	0.00E+00	0.00E+00	Avg Feed
7440-02-0	Nickel	5.93E-13	0.00E+00	0.00E+00	0.00E+00	Avg Feed
14797-65-0	Nitrite	1.92E-14	0.00E+00	0.00E+00	0.00E+00	Avg Feed
14797-55-8	Nitrate	1.37E-12	0.00E+00	0.00E+00	0.00E+00	Avg Feed
14280-30-9	Hydroxide	3.98E-13	0.00E+00	0.00E+00	0.00E+00	Avg Feed
7723-14-0	Phosphorous	0.00E+00	0.00E+00	0.00E+00	0.00E+00	Avg Feed
7439-92-1	Lead	1.11E-12	0.00E+00	0.00E+00	0.00E+00	Avg Feed
14265-44-2	Phosphate	2.61E-12	0.00E+00	0.00E+00	0.00E+00	Avg Feed
63705-05-5	Total Sulfur	6.29E-03	2.49E-04	1.15E-04	2.77E-04	Avg Feed
7440-21-3	Silicon	2.46E-11	0.00E+00	0.00E+00	0.00E+00	Avg Feed
14808-79-8	Sulfate	3.39E-15	0.00E+00	0.00E+00	0.00E+00	Avg Feed
7440-24-6	Strontium (total)	1.21E-14	0.00E+00	0.00E+00	0.00E+00	Avg Feed
7440-66-6	Zinc	2.05E-12	0.00E+00	0.00E+00	0.00E+00	Avg Feed
7440-67-7	Zirconium	7.57E-13	0.00E+00	0.00E+00	0.00E+00	Avg Feed
630-08-0	Carbon monoxide	1.49E-03	4.56E-05	3.01E-05	2.02E-04	Avg Feed
10102-43-9	Nitric Oxide	1.04E-01	3.68E-02	1.05E-02	1.91E-02	Avg Feed
10102-44-0	Nitrogen dioxide	1.49E-02	5.83E-03	1.89E-03	3.13E-03	Avg Feed
7446-09-5	Sulfur dioxide	6.28E-02	1.99E-03	9.17E-04	2.22E-03	Avg Feed
7664-41-7	Ammonia/Ammonium	9.15E-03	4.30E-02	1.25E-02	2.25E-02	Env A
7647-01-0	Hydrochloric Acid	2.60E-05	2.74E-08	5.24E-09	1.58E-08	Avg Feed
7664-39-3	Hydrofluoric Acid	2.22E-05	8.27E-08	7.90E-09	1.02E-08	Avg Feed
7697-37-2	Nitric Acid	0.00E+00	0.00E+00	0.00E+00	0.00E+00	Avg Feed

Table 23 Inorganic COPCs Air Emissions Comparison

CAS Number	Compound	PJV34 - HLW PJM/RFD				
		Avg Feed	Envelope A	Envelope B	Envelope C	MAX
		g/sec				
7440-22-4	Silver	2.02E-15	0.00E+00	0.00E+00	0.00E+00	Avg Feed
7429-90-5	Aluminum	1.05E-13	8.37E-15	7.12E-15	3.02E-15	Avg Feed
7440-38-2	Arsenic	0.00E+00	0.00E+00	0.00E+00	0.00E+00	Avg Feed
7440-42-8	Boron	1.87E-13	2.51E-14	1.79E-14	1.72E-14	Avg Feed
7440-39-3	Barium	0.00E+00	0.00E+00	0.00E+00	0.00E+00	Avg Feed
7440-69-9	Bismuth	4.87E-15	0.00E+00	0.00E+00	0.00E+00	Avg Feed
7440-70-2	Calcium	4.41E-15	1.46E-15	6.27E-16	3.91E-15	Avg Feed
7440-43-9	Cadmium	2.18E-14	0.00E+00	2.39E-15	0.00E+00	Avg Feed
16887-00-6	Chloride	3.80E-14	7.43E-15	9.08E-15	2.24E-14	Avg Feed
18540-29-9	Chromium (hexavalent)	5.18E-15	0.00E+00	1.14E-16	1.53E-15	Avg Feed
7440-50-8	Copper	0.00E+00	0.00E+00	0.00E+00	0.00E+00	Avg Feed
16984-48-8	Flouride	2.38E-13	7.07E-15	5.17E-15	5.14E-15	Avg Feed
7439-89-6	Iron	9.21E-14	1.90E-14	2.76E-14	4.90E-15	Avg Feed
7439-97-6	Mercury	1.81E-08	1.55E-09	3.27E-11	0.00E+00	Avg Feed
7440-09-7	Potassium	2.69E-14	6.12E-15	3.50E-16	0.00E+00	Avg Feed
7439-93-2	Lithium	2.34E-14	2.87E-15	1.97E-15	2.26E-15	Avg Feed
7439-95-4	Magnesium	1.29E-15	0.00E+00	4.37E-16	1.79E-16	Avg Feed
7439-96-5	Manganese	1.05E-14	3.19E-15	1.18E-16	5.49E-15	Avg Feed
7440-23-5	Sodium	1.53E-12	1.55E-13	5.21E-14	2.22E-13	Avg Feed
7440-02-0	Nickel	5.68E-15	0.00E+00	1.40E-15	0.00E+00	Avg Feed
14797-65-0	Nitrite	0.00E+00	0.00E+00	0.00E+00	0.00E+00	Avg Feed
14797-55-8	Nitrate	2.34E-12	3.03E-13	1.82E-13	5.19E-13	Avg Feed
14280-30-9	Hydroxide	3.84E-13	3.97E-14	8.47E-15	5.49E-14	Avg Feed
7723-14-0	Phosphorous	0.00E+00	0.00E+00	0.00E+00	0.00E+00	Avg Feed
7439-92-1	Lead	5.79E-15	1.92E-15	1.04E-16	0.00E+00	Avg Feed
14265-44-2	Phosphate	5.37E-14	1.77E-15	0.00E+00	0.00E+00	Avg Feed
63705-05-5	Total Sulfur	0.00E+00	0.00E+00	0.00E+00	0.00E+00	Avg Feed
7440-21-3	Silicon	4.53E-13	0.00E+00	1.26E-16	0.00E+00	Avg Feed
14808-79-8	Sulfate	0.00E+00	9.19E-15	3.24E-14	6.03E-14	Env C
7440-24-6	Strontium (total)	0.00E+00	0.00E+00	0.00E+00	3.94E-14	Env C
7440-66-6	Zinc	2.54E-14	3.25E-15	3.92E-15	4.67E-15	Avg Feed
7440-67-7	Zirconium	1.27E-14	0.00E+00	5.38E-15	1.01E-15	Avg Feed
630-08-0	Carbon monoxide	0.00E+00	0.00E+00	0.00E+00	0.00E+00	Avg Feed
10102-43-9	Nitric Oxide	0.00E+00	0.00E+00	0.00E+00	0.00E+00	Avg Feed
10102-44-0	Nitrogen dioxide	0.00E+00	0.00E+00	0.00E+00	0.00E+00	Avg Feed
7446-09-5	Sulfur dioxide	0.00E+00	0.00E+00	0.00E+00	0.00E+00	Avg Feed
7664-41-7	Ammonia/Ammonium	3.54E-11	0.00E+00	0.00E+00	5.59E-10	Env C
7647-01-0	Hydrochloric Acid	0.00E+00	0.00E+00	0.00E+00	0.00E+00	Avg Feed
7664-39-3	Hydrofluoric Acid	0.00E+00	0.00E+00	0.00E+00	0.00E+00	Avg Feed
7697-37-2	Nitric Acid	0.00E+00	0.00E+00	0.00E+00	0.00E+00	Avg Feed

Figure 1 Simplified WTP Process Overview

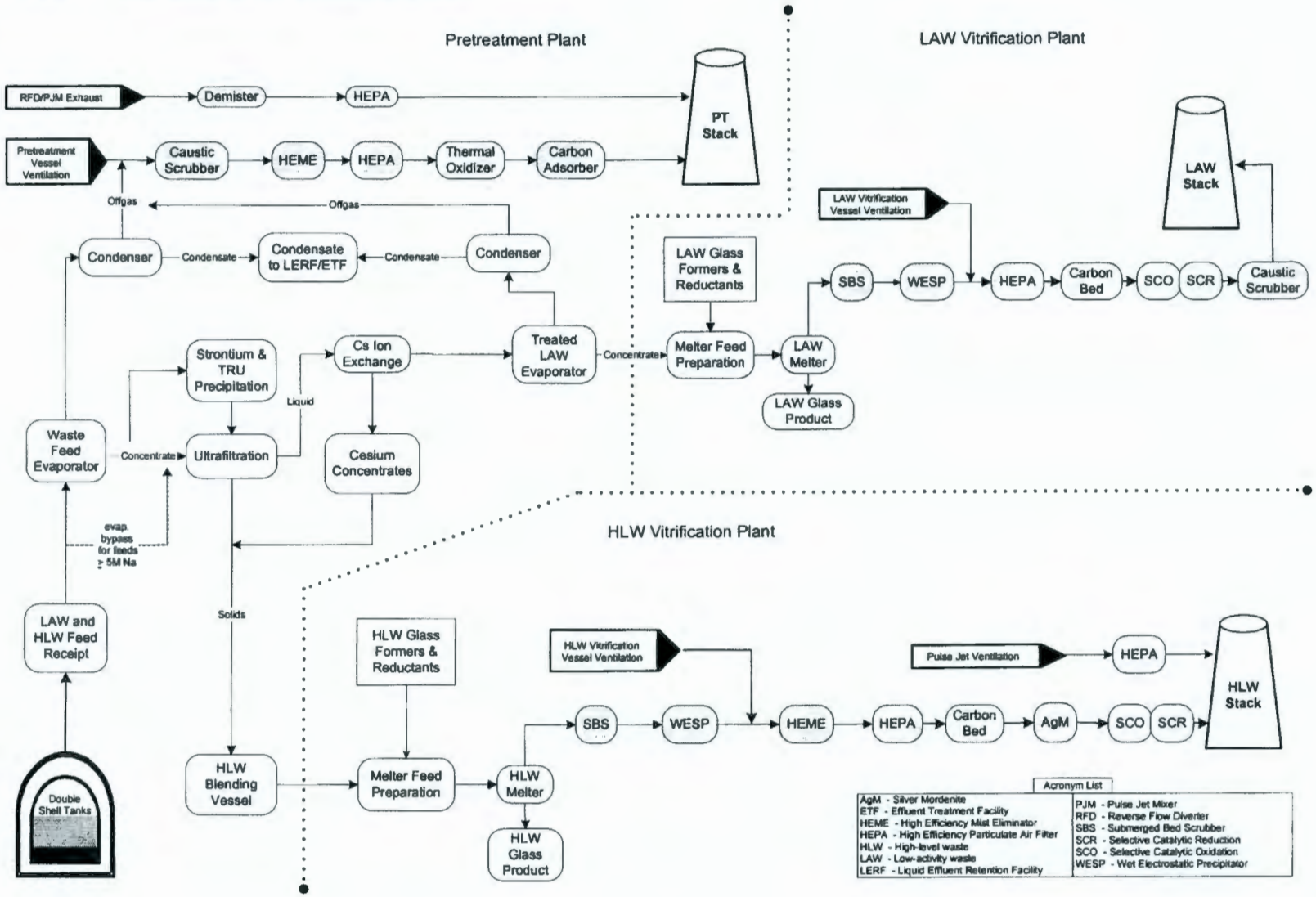

Figure 2 Simplified Pretreatment Process Flowsheet
(sheet 1 of 2)

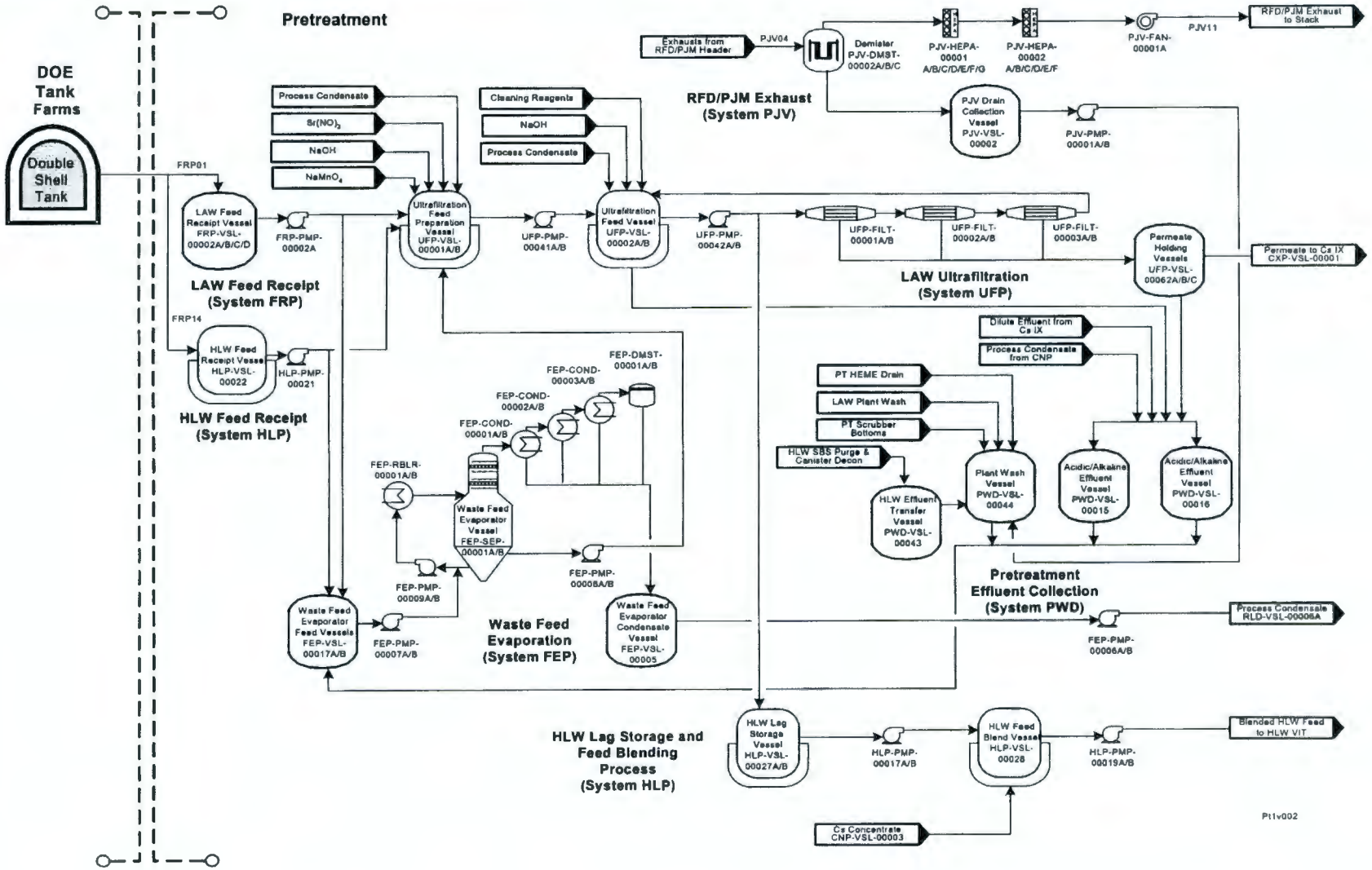

Figure 3 Simplified Pretreatment Process Flowsheet
(sheet 2 of 2)

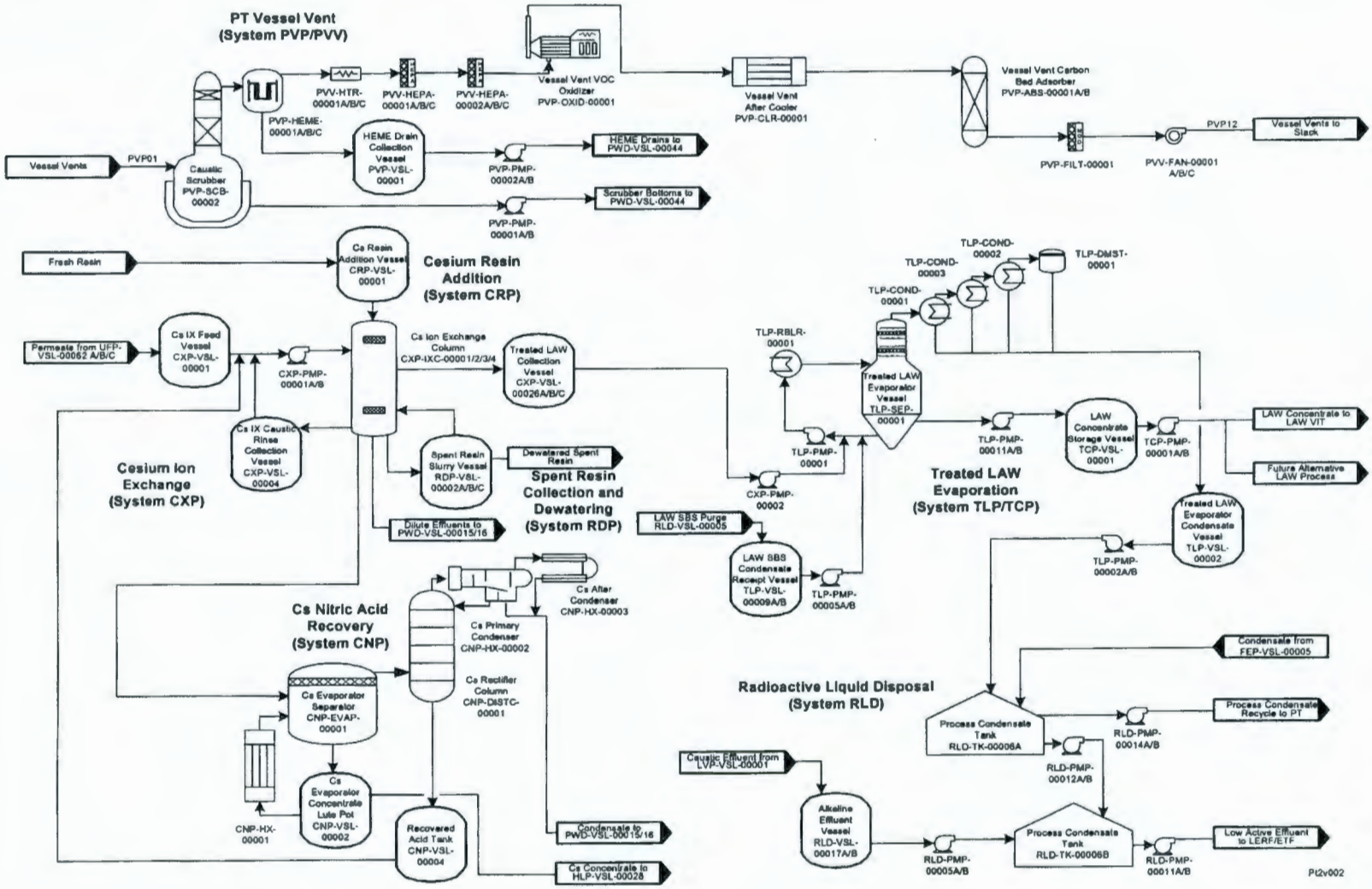

Figure 4 Simplified LAW Vitrification Process Flowsheet

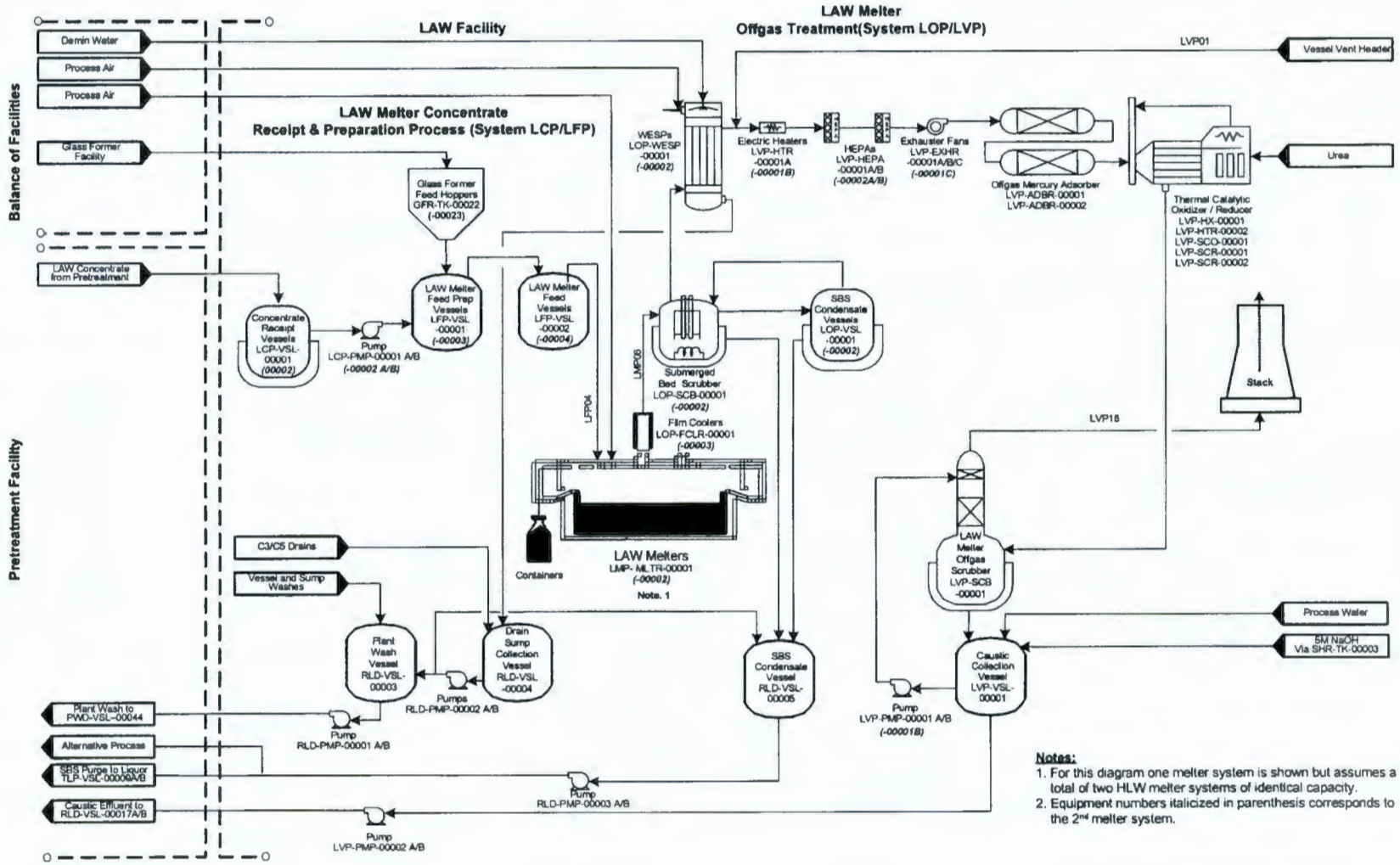

Notes:

1. For this diagram one melter system is shown but assumes a total of two HLW melter systems of identical capacity.
2. Equipment numbers italicized in parenthesis corresponds to the 2nd melter system.

Figure 5 Simplified HLW Vitrification Process Flowsheet

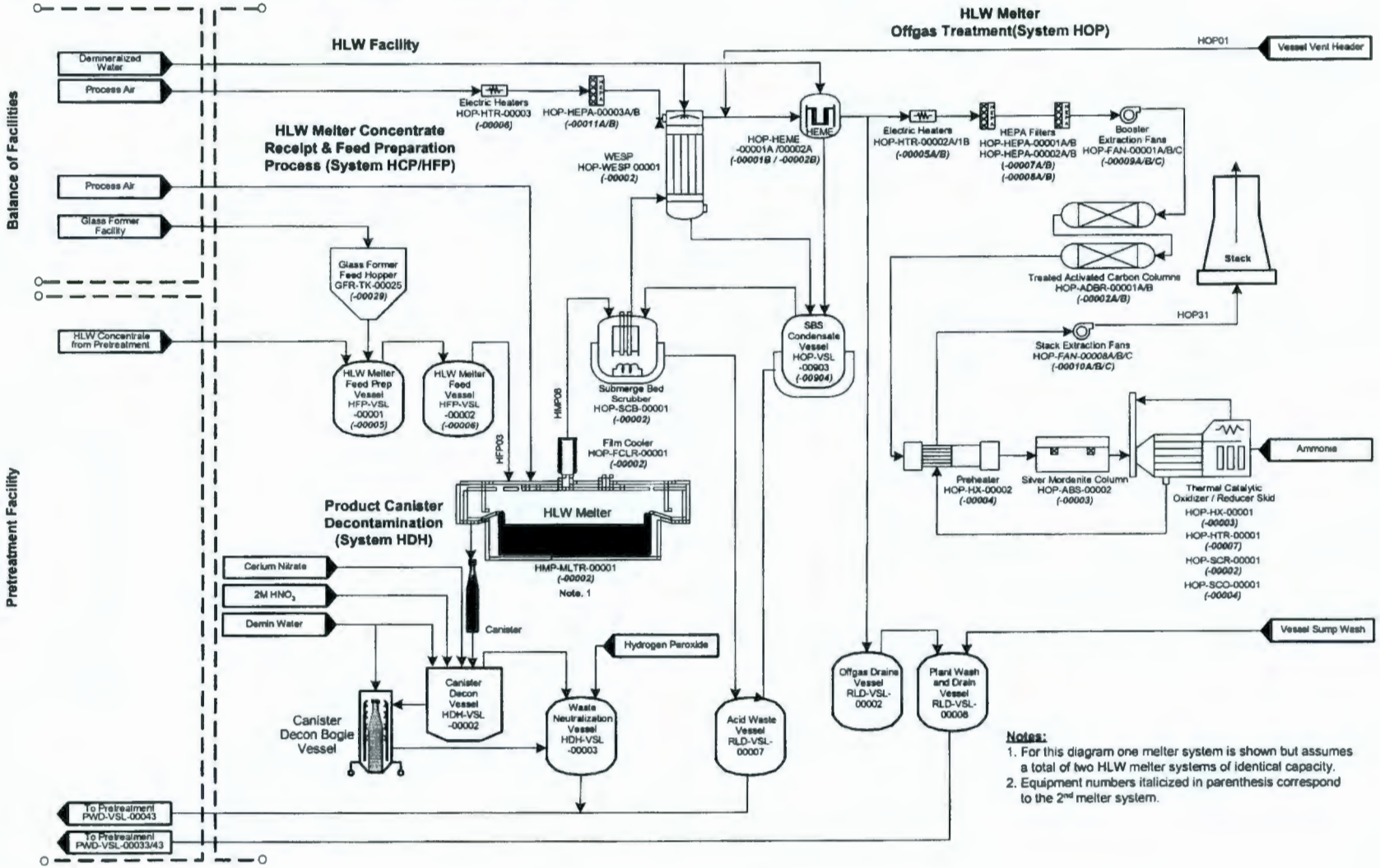

Figure 6 Emissions Estimate Objectives

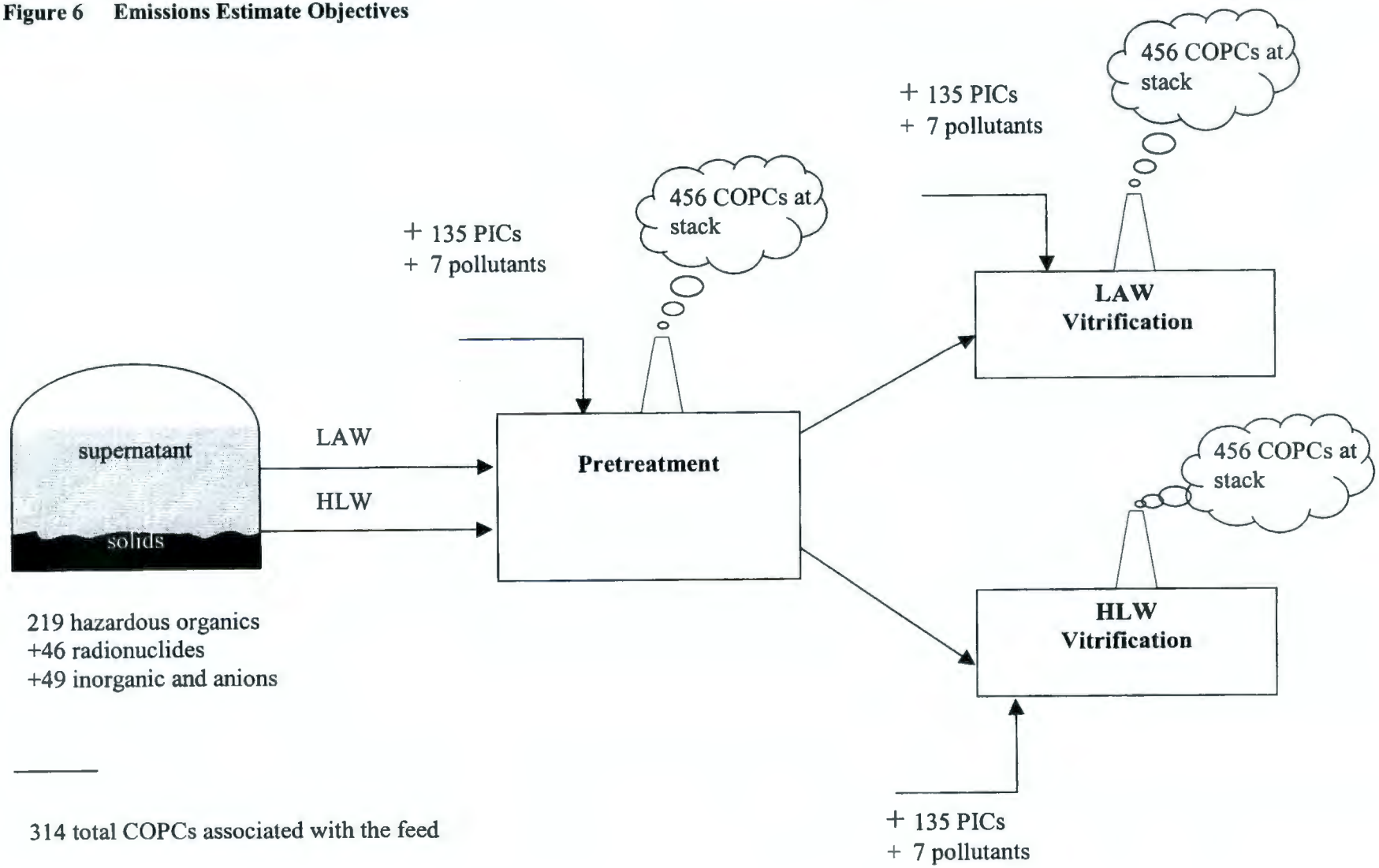

This page intentionally left blank.

Appendix A

Selected Stream-Specific Reports from the Steady State Flowsheet Model

This page intentionally left blank.

Appendix A
Selected Stream-Specific Reports from the Steady State Flowsheet Model

Appendix A contains stream-specific output from the steady state flowsheet model (SSFM) for unabated, abated, and feed points in the Hanford Tank Waste Treatment and Immobilization Plant (WTP) process. These stream-specific reports contain mass flow rate information for each of the inorganic, radionuclide, and organic constituents of potential concern (COPCs) included in the SSFM. Mass flow rates for COPCs not included directly in the SSFM are described in separate calculations. These calculations are included in Appendices B and C.

This page intentionally left blank.

Stream Number:	FRP14
Stream Name:	Waste feed from DOE to HLW Feed Receipt
Configuration:	MRQ-05-0049.acmf
Run Date / Time:	12/14/2005 - 1:42:25 PM
Run Data File:	H:\ACM v3.1\MRQ-05-0049\MRQ_05_0049A_Streams.csv

Stream Properties			
Variable	Value	Units	
Density	1.25E+00	g/cm^3	(does not include solid phase)
Enthalpy	-2.66E+07	BTU/hr	
Mass Flow	4.76E+03	Lb/hr	
	1.14E+05	Lb/day	
Volumetric Flow	7.21E+00	GPM	(does not include solid phase)
	9.63E-01	ft^3/min	(does not include solid phase)
Molar Flow	2.22E+02	Lbmol/hr	
Molecular Weight	1.99E+01	Lb/Lbmol	
Pressure	1.00E+03	mbar	
Temperature	4.90E+01	C	
Na Molarity	4.00E+00	mol/L	
pH	1.44E+01	pH	
Total TRU	2.90E-02	Ci/L	
Total Activity	5.16E+00	Ci/L	

Component	Aqueous Comp			Solid Comp	Gaseous (1)		Total Comp		
Unit	mol/L	Lb/gal	Lb/day	Lb/day	mol/L	Lb/day	Lb/day	mt/day	g/sec
Total	6.14E+01	1.02E+01	1.06E+05	5.05E+03	0.00E+00	0.00E+00	1.11E+05	5.04E+01	5.83E+02
Ag^+	3.17E-05	2.85E-05	2.98E-01	3.50E+00	0.00E+00	0.00E+00	3.80E+00	1.73E-03	2.00E-02
Al^{+3}	3.84E-01	8.64E-02	8.97E+02	4.93E+02	0.00E+00	0.00E+00	1.39E+03	6.32E-01	7.31E+00
As^{+3}	1.40E-04	8.73E-05	9.06E-01	2.20E-01	0.00E+00	0.00E+00	1.13E+00	5.12E-04	5.92E-03
B^{+3}	2.32E-03	2.09E-04	2.17E+00	3.00E+00	0.00E+00	0.00E+00	5.17E+00	2.35E-03	2.72E-02
Ba^{+2}	2.91E-05	3.34E-05	3.46E-01	3.20E+00	0.00E+00	0.00E+00	3.55E+00	1.61E-03	1.87E-02
Bi^{+3}	3.43E-05	5.99E-05	6.21E-01	1.67E+01	0.00E+00	0.00E+00	1.73E+01	7.85E-03	9.09E-02
Ca^{+2}	1.98E-03	6.61E-04	6.86E+00	1.92E+01	0.00E+00	0.00E+00	2.60E+01	1.18E-02	1.37E-01
Cd^{+2}	5.41E-05	5.07E-05	5.27E-01	1.17E+01	0.00E+00	0.00E+00	1.23E+01	5.58E-03	6.45E-02
Ce^{+3}	6.69E-05	7.83E-05	8.12E-01	4.01E+00	0.00E+00	0.00E+00	4.82E+00	2.19E-03	2.53E-02
Cl^-	6.17E-02	1.82E-02	1.89E+02	3.93E+00	0.00E+00	0.00E+00	1.93E+02	8.79E-02	1.02E+00
CO	0.00E+00	0.00E+00	0.00E+00	0.00E+00	0.00E+00	0.00E+00	0.00E+00	0.00E+00	0.00E+00
CO_2	0.00E+00	0.00E+00	0.00E+00	0.00E+00	0.00E+00	0.00E+00	0.00E+00	0.00E+00	0.00E+00
CO_3^{-2}	3.07E-01	1.54E-01	1.59E+03	4.40E+02	0.00E+00	0.00E+00	2.03E+03	9.24E-01	1.07E+01
Cr^{+3}	9.19E-03	3.99E-03	4.14E+01	9.96E+00	0.00E+00	0.00E+00	5.13E+01	2.33E-02	2.70E-01
Cu^{+2}	5.35E-05	2.84E-05	2.95E-01	1.36E+00	0.00E+00	0.00E+00	1.66E+00	7.53E-04	8.72E-03
F^-	2.47E-02	3.91E-03	4.06E+01	7.13E+01	0.00E+00	0.00E+00	1.12E+02	5.08E-02	5.88E-01
Fe^{+3}	1.39E-03	6.48E-04	6.72E+00	5.09E+02	0.00E+00	0.00E+00	5.15E+02	2.34E-01	2.71E+00
H_2O	5.20E+01	7.81E+00	8.11E+04	0.00E+00	0.00E+00	0.00E+00	8.11E+04	3.68E+01	4.26E+02
$H_2O(b)$	0.00E+00	0.00E+00	0.00E+00	0.00E+00	0.00E+00	0.00E+00	0.00E+00	0.00E+00	0.00E+00
H^+	0.00E+00	0.00E+00	0.00E+00	0.00E+00	0.00E+00	0.00E+00	0.00E+00	0.00E+00	0.00E+00
HCL	0.00E+00	0.00E+00	0.00E+00	0.00E+00	0.00E+00	0.00E+00	0.00E+00	0.00E+00	0.00E+00
HCO3-	0.00E+00	0.00E+00	0.00E+00	0.00E+00	0.00E+00	0.00E+00	0.00E+00	0.00E+00	0.00E+00
H2CO3	0.00E+00	0.00E+00	0.00E+00	0.00E+00	0.00E+00	0.00E+00	0.00E+00	0.00E+00	0.00E+00
HF	0.00E+00	0.00E+00	0.00E+00	0.00E+00	0.00E+00	0.00E+00	0.00E+00	0.00E+00	0.00E+00
Hg^{+2}	5.60E-05	9.38E-05	9.74E-01	1.99E+00	0.00E+00	0.00E+00	2.97E+00	1.35E-03	1.56E-02
HNO_3	0.00E+00	0.00E+00	0.00E+00	0.00E+00	0.00E+00	0.00E+00	0.00E+00	0.00E+00	0.00E+00
K^+	1.31E-01	4.28E-02	4.44E+02	1.01E+01	0.00E+00	0.00E+00	4.54E+02	2.07E-01	2.39E+00
La^{+3}	1.48E-05	1.72E-05	1.79E-01	5.94E+00	0.00E+00	0.00E+00	6.12E+00	2.78E-03	3.22E-02
Li^+	4.20E-04	2.43E-05	2.52E-01	4.18E-01	0.00E+00	0.00E+00	6.71E-01	3.05E-04	3.53E-03
Mg^{+2}	4.42E-04	8.96E-05	9.29E-01	3.93E+00	0.00E+00	0.00E+00	4.86E+00	2.21E-03	2.56E-02
Mn^{+3}	4.79E-04	2.20E-04	2.28E+00	4.67E+01	0.00E+00	0.00E+00	4.90E+01	2.23E-02	2.58E-01
MnO_4^-	0.00E+00	0.00E+00	0.00E+00	0.00E+00	0.00E+00	0.00E+00	0.00E+00	0.00E+00	0.00E+00
N_2	0.00E+00	0.00E+00	0.00E+00	0.00E+00	0.00E+00	0.00E+00	0.00E+00	0.00E+00	0.00E+00
Na^+	4.00E+00	7.67E-01	7.96E+03	7.92E+02	0.00E+00	0.00E+00	8.76E+03	3.98E+00	4.61E+01
NH3	2.82E-03	4.01E-04	4.16E+00	0.00E+00	0.00E+00	0.00E+00	4.16E+00	1.89E-03	2.19E-02
NH4+	0.00E+00	4.01E-04	0.00E+00	0.00E+00	0.00E+00	0.00E+00	0.00E+00	0.00E+00	0.00E+00
Ni^{+2}	7.32E-04	3.59E-04	3.72E+00	2.09E+01	0.00E+00	0.00E+00	2.46E+01	1.12E-02	1.29E-01
NO	0.00E+00	0.00E+00	0.00E+00	0.00E+00	0.00E+00	0.00E+00	0.00E+00	0.00E+00	0.00E+00
NO_2	0.00E+00	0.00E+00	0.00E+00	0.00E+00	0.00E+00	0.00E+00	0.00E+00	0.00E+00	0.00E+00
NO_2^-	8.34E-01	3.20E-01	3.32E+03	1.99E+02	0.00E+00	0.00E+00	3.52E+03	1.60E+00	1.85E+01
NO_3^-	1.13E+00	5.83E-01	6.05E+03	1.53E+02	0.00E+00	0.00E+00	6.21E+03	2.82E+00	3.27E+01
O_2	0.00E+00	0.00E+00	0.00E+00	0.00E+00	0.00E+00	0.00E+00	0.00E+00	0.00E+00	0.00E+00
O^-	0.00E+00	0.00E+00	0.00E+00	0.00E+00	0.00E+00	0.00E+00	0.00E+00	0.00E+00	0.00E+00
OH^-	2.53E+00	3.59E-01	3.73E+03	1.82E+03	0.00E+00	0.00E+00	5.54E+03	2.52E+00	2.92E+01
OH(b)	0.00E+00	0.00E+00	0.00E+00	0.00E+00	0.00E+00	0.00E+00	0.00E+00	0.00E+00	0.00E+00
Pb^{+2}	1.96E-04	3.39E-04	3.52E+00	2.74E+01	0.00E+00	0.00E+00	3.09E+01	1.40E-02	1.62E-01
Pd^{+2}	1.52E-05	1.35E-05	1.40E-01	1.13E+00	0.00E+00	0.00E+00	1.27E+00	5.78E-04	6.69E-03
PO_4^{-3}	1.57E-02	1.24E-02	1.29E+02	1.21E+02	0.00E+00	0.00E+00	2.50E+02	1.14E-01	1.32E+00
Resin	0.00E+00	0.00E+00	0.00E+00	0.00E+00	0.00E+00	0.00E+00	0.00E+00	0.00E+00	0.00E+00
Rh^{+3}	1.47E-05	1.26E-05	1.31E-01	3.58E-01	0.00E+00	0.00E+00	4.88E-01	2.22E-04	2.57E-03
Ru^{+3}	2.18E-05	1.84E-05	1.91E-01	2.50E+00	0.00E+00	0.00E+00	2.70E+00	1.23E-03	1.42E-02
S^{+6}	0.00E+00	0.00E+00	0.00E+00	0.00E+00	0.00E+00	0.00E+00	0.00E+00	0.00E+00	0.00E+00
SiO2	2.96E-03	1.48E-03	1.54E+01	8.20E+01	0.00E+00	0.00E+00	9.75E+01	4.43E-02	5.13E-01
SiO_4^{-4}	0.00E+00	0.00E+00	0.00E+00	0.00E+00	0.00E+00	0.00E+00	0.00E+00	0.00E+00	0.00E+00
SO_2	0.00E+00	0.00E+00	0.00E+00	0.00E+00	0.00E+00	0.00E+00	0.00E+00	0.00E+00	0.00E+00
SO_4^{-2}	3.74E-02	3.00E-02	3.11E+02	4.50E+01	0.00E+00	0.00E+00	3.56E+02	1.62E-01	1.88E+00
Sr^{+2}	6.95E-06	5.08E-06	5.28E-02	1.80E+00	0.00E+00	0.00E+00	1.85E+00	8.41E-04	9.74E-03
Sucrose	0.00E+00	0.00E+00	0.00E+00	0.00E+00	0.00E+00	0.00E+00	0.00E+00	0.00E+00	0.00E+00
Ti^{+4}	2.44E-05	9.75E-06	1.01E-01	7.23E-01	0.00E+00	0.00E+00	8.24E-01	3.74E-04	4.33E-03
Zn^{+2}	9.13E-05	4.98E-05	5.17E-01	1.81E+00	0.00E+00	0.00E+00	2.33E+00	1.06E-03	1.23E-02
Zr^{+4}	6.74E-05	5.13E-05	5.32E-01	1.24E+02	0.00E+00	0.00E+00	1.25E+02	5.66E-02	6.55E-01

Components	Aqueous Comp			Solid Comp	Gaseous		Total Comp		
Unit	mol/L	Lb/gal	Lb/day	Lb/day	mol/L	Lb/day	Lb/day	Mt/day	g/sec
Total	1.58E-02	1.16E-02	1.20E+02	5.95E+01	0.00E+00	0.00E+00	1.80E+02	8.18E-02	9.47E-01
$C_2O_4^{-2}$	1.58E-02	1.16E-02	1.20E+02	5.95E+01	0.00E+00	0.00E+00	1.80E+02	8.18E-02	9.47E-01
Formate	0.00E+00	0.00E+00	0.00E+00	0.00E+00	0.00E+00	0.00E+00	0.00E+00	0.00E+00	0.00E+00
Acetate	0.00E+00	0.00E+00	0.00E+00	0.00E+00	0.00E+00	0.00E+00	0.00E+00	0.00E+00	0.00E+00
Glycolate	0.00E+00	0.00E+00	0.00E+00	0.00E+00	0.00E+00	0.00E+00	0.00E+00	0.00E+00	0.00E+00
IDA	0.00E+00	0.00E+00	0.00E+00	0.00E+00	0.00E+00	0.00E+00	0.00E+00	0.00E+00	0.00E+00
Citrate	0.00E+00	0.00E+00	0.00E+00	0.00E+00	0.00E+00	0.00E+00	0.00E+00	0.00E+00	0.00E+00
HEDTA	0.00E+00	0.00E+00	0.00E+00	0.00E+00	0.00E+00	0.00E+00	0.00E+00	0.00E+00	0.00E+00
EDTA	0.00E+00	0.00E+00	0.00E+00	0.00E+00	0.00E+00	0.00E+00	0.00E+00	0.00E+00	0.00E+00

Rad. Comp	Aqueous Rad. Comp			Solids Rad. Comp (1)			Total Rad. Comp (1)		
Unit	Ci/L	Ci/day	Lb/day	Ci/L	Ci/day	Lb/day	Ci/L	Ci/day	Lb/day
Total	2.26E+00	8.88E+04	4.64E+01	2.90E+00	1.14E+05	8.52E+02	5.16E+00	2.03E+05	8.98E+02
^{241}Am	2.98E-04	1.17E+01	7.53E-03	2.15E-02	8.46E+02	5.44E-01	2.18E-02	8.58E+02	5.52E-01
^{243}Am	1.95E-07	7.65E-03	8.45E-05	1.74E-06	6.84E-02	7.55E-04	1.94E-06	7.60E-02	8.40E-04
^{14}C	6.09E-06	2.39E-01	1.18E-04	1.55E-06	6.08E-02	3.00E-05	7.64E-06	3.00E-01	1.48E-04
^{60}Co	4.00E-05	1.57E+00	3.06E-06	2.39E-03	9.39E+01	1.83E-04	2.43E-03	9.54E+01	1.86E-04
^{243}Cm	3.22E-08	1.26E-03	5.51E-08	3.02E-05	1.19E+00	5.18E-05	3.03E-05	1.19E+00	5.19E-05
^{244}Cm	7.61E-07	2.99E-02	8.14E-07	6.87E-04	2.70E+01	7.36E-04	6.88E-04	2.70E+01	7.36E-04
^{137}Cs	2.17E+00	8.52E+04	2.16E+00	3.58E-01	1.41E+04	3.58E-01	2.53E+00	9.92E+04	2.52E+00
^{152}Eu	2.24E-06	8.81E-02	1.12E-06	1.15E-04	4.51E+00	5.73E-05	1.17E-04	4.60E+00	5.84E-05
^{154}Eu	4.65E-04	1.83E+01	1.49E-04	1.24E-02	4.89E+02	3.99E-03	1.29E-02	5.07E+02	4.14E-03
^{155}Eu	1.34E-04	5.28E+00	2.40E-05	1.84E-03	7.24E+01	3.29E-04	1.98E-03	7.77E+01	3.53E-04
^{3}H	5.19E-05	2.04E+00	4.68E-07	1.55E-05	6.08E-01	1.40E-07	6.74E-05	2.65E+00	6.08E-07
^{129}I	1.86E-07	7.30E-03	9.11E-02	6.95E-08	2.73E-03	3.41E-02	2.55E-07	1.00E-02	1.25E-01
^{63}Ni	7.20E-04	2.83E+01	1.10E-03	4.14E-04	1.63E+01	6.32E-04	1.13E-03	4.46E+01	1.73E-03
^{237}Np	2.36E-07	9.27E-03	2.90E-02	1.77E-05	6.95E-01	2.18E+00	1.79E-05	7.05E-01	2.20E+00
^{238}Pu	1.33E-06	5.24E-02	6.74E-06	8.39E-05	3.30E+00	4.24E-04	8.53E-05	3.35E+00	4.31E-04
^{239}Pu	1.84E-05	7.24E-01	2.57E-02	7.43E-04	2.92E+01	1.04E+00	7.62E-04	2.99E+01	1.06E+00
^{240}Pu	4.78E-06	1.88E-01	1.82E-03	1.96E-04	7.71E+00	7.48E-02	2.01E-04	7.89E+00	7.67E-02
^{241}Pu	1.00E-04	3.94E+00	8.43E-05	5.27E-03	2.07E+02	4.43E-03	5.37E-03	2.11E+02	4.51E-03
^{242}Pu	5.06E-10	1.99E-05	1.11E-05	1.83E-08	7.18E-04	4.02E-04	1.88E-08	7.38E-04	4.13E-04
^{125}Sb	2.77E-04	1.09E+01	2.31E-05	7.67E-03	3.01E+02	6.40E-04	7.95E-03	3.12E+02	6.63E-04
^{151}Sm	3.89E-03	1.53E+02	1.28E-02	9.31E-02	3.66E+03	3.06E-01	9.70E-02	3.81E+03	3.19E-01
^{126}Sn	4.41E-06	1.73E-01	3.36E-02	3.60E-05	1.41E+00	2.74E-01	4.04E-05	1.59E+00	3.08E-01
^{90}Sr	8.64E-02	3.40E+03	5.42E-02	2.39E+00	9.39E+04	1.50E+00	2.48E+00	9.73E+04	1.55E+00
^{99}Tc	7.67E-04	3.01E+01	3.92E+00	3.60E-03	1.41E+02	1.84E+01	4.37E-03	1.71E+02	2.23E+01
^{232}Th	7.17E-09	2.82E-04	5.64E+00	5.86E-07	2.30E-02	4.61E+02	5.93E-07	2.33E-02	4.66E+02
^{233}U	2.39E-07	9.39E-03	2.15E-03	4.79E-05	1.88E+00	4.31E-01	4.82E-05	1.89E+00	4.33E-01
^{234}U	1.70E-07	6.66E-03	2.37E-03	2.49E-06	9.79E-02	3.48E-02	2.66E-06	1.05E-01	3.71E-02
^{235}U	6.68E-09	2.62E-04	2.68E-01	5.99E-08	2.35E-03	2.40E+00	6.66E-08	2.61E-03	2.67E+00
^{236}U	1.14E-08	4.50E-04	1.53E-02	8.23E-08	3.23E-03	1.10E-01	9.37E-08	3.68E-03	1.26E-01
^{238}U	1.32E-07	5.20E-03	3.41E+01	1.41E-06	5.54E-02	3.63E+02	1.54E-06	6.06E-02	3.98E+02

(1) All radionuclides in gaseous streams are assumed to exist as solid particulate.

CAS Comp	Organic Components				
Unit	mol/L	Lb/gal	Lb/day	Mt/day	g/sec
Total	4.06E-01	2.20E-01	2.28E+03	1.04E+00	1.20E+01
50-32-8	1.51E-04	3.18E-04	3.30E+00	1.50E-03	1.74E-02
56-23-5	2.60E-05	3.34E-05	3.46E-01	1.57E-04	1.82E-03
57-14-7	9.98E-04	5.01E-04	5.19E+00	2.36E-03	2.73E-02
58-90-2	2.59E-04	5.01E-04	5.20E+00	2.36E-03	2.74E-02
59-89-2	5.17E-04	5.01E-04	5.20E+00	2.36E-03	2.74E-02
60-35-5	1.69E-04	8.33E-05	8.65E-01	3.93E-04	4.55E-03
62-75-9	8.10E-04	5.01E-04	5.20E+00	2.36E-03	2.73E-02
64-19-7	3.61E-01	1.81E-01	1.88E+03	8.53E-01	9.88E+00
71-43-2	5.12E-05	3.34E-05	3.46E-01	1.57E-04	1.82E-03
75-05-8	2.44E-04	8.36E-05	8.67E-01	3.94E-04	4.56E-03
75-12-7	1.33E-03	5.00E-04	5.19E+00	2.36E-03	2.73E-02
76-15-3	6.47E-05	8.34E-05	8.66E-01	3.93E-04	4.55E-03
79-01-6	7.61E-05	8.35E-05	8.66E-01	3.94E-04	4.56E-03
83-32-9	3.89E-04	5.01E-04	5.20E+00	2.36E-03	2.73E-02
84-66-2	2.70E-04	5.01E-04	5.20E+00	2.36E-03	2.73E-02
84-74-2	2.16E-04	5.02E-04	5.21E+00	2.37E-03	2.74E-02
87-68-3	3.83E-05	8.33E-05	8.65E-01	3.93E-04	4.55E-03
88-89-1	2.62E-04	5.01E-04	5.20E+00	2.36E-03	2.74E-02
91-20-3	1.56E-05	1.67E-05	1.73E-01	7.87E-05	9.11E-04
95-50-1	2.72E-05	3.34E-05	3.46E-01	1.57E-04	1.82E-03
98-86-2	3.32E-04	3.34E-04	3.46E+00	1.57E-03	1.82E-02
100-21-0	3.61E-04	5.00E-04	5.19E+00	2.36E-03	2.73E-02
101-84-8	5.86E-05	8.35E-05	8.67E-01	3.94E-04	4.56E-03
106-93-4	2.13E-05	3.34E-05	3.47E-01	1.58E-04	1.82E-03
106-97-8	1.72E-04	8.34E-05	8.66E-01	3.94E-04	4.56E-03
106-99-0	7.39E-05	3.34E-05	3.46E-01	1.57E-04	1.82E-03
108-67-2	1.02E-04	8.36E-05	8.67E-01	3.94E-04	4.56E-03
108-88-3	4.34E-05	3.34E-05	3.46E-01	1.57E-04	1.82E-03
108-95-2	6.38E-04	5.01E-04	5.20E+00	2.36E-03	2.74E-02
110-54-3	1.16E-04	8.34E-05	8.66E-01	3.94E-04	4.55E-03
110-82-7	1.19E-04	8.36E-05	8.67E-01	3.94E-04	4.56E-03
111-84-2	7.80E-05	8.35E-05	8.66E-01	3.94E-04	4.56E-03
120-12-7	3.37E-04	5.01E-04	5.20E+00	2.36E-03	2.74E-02
120-82-1	5.51E-05	8.34E-05	8.66E-01	3.94E-04	4.56E-03
122-39-4	1.18E-04	1.67E-04	1.73E+00	7.86E-04	9.10E-03
126-73-8	1.50E-04	3.33E-04	3.46E+00	1.57E-03	1.82E-02
127-18-4	2.41E-05	3.34E-05	3.46E-01	1.57E-04	1.82E-03
129-00-0	2.97E-04	5.01E-04	5.20E+00	2.36E-03	2.74E-02
132-64-9	3.57E-04	5.01E-04	5.20E+00	2.36E-03	2.74E-02
144-62-7	3.33E-02	2.50E-02	2.60E+02	1.18E-01	1.37E+00
193-39-5	2.17E-04	5.00E-04	5.19E+00	2.36E-03	2.73E-02
206-44-0	2.97E-04	5.01E-04	5.20E+00	2.36E-03	2.74E-02
208-96-8	3.94E-04	5.00E-04	5.19E+00	2.36E-03	2.73E-02
603-34-9	2.45E-04	5.02E-04	5.21E+00	2.37E-03	2.74E-02
621-64-7	4.61E-04	5.01E-04	5.20E+00	2.36E-03	2.73E-02
1321-64-8	2.00E-04	5.01E-04	5.20E+00	2.37E-03	2.74E-02
1336-36-3	1.07E-05	2.87E-05	2.98E-01	1.35E-04	1.57E-03
3697-24-3	2.48E-04	5.02E-04	5.20E+00	2.37E-03	2.74E-02
4170-30-3	1.43E-04	8.36E-05	8.68E-01	3.95E-04	4.57E-03
10061-01-5	3.60E-05	3.33E-05	3.46E-01	1.57E-04	1.82E-03
26140-60-3	2.61E-04	5.02E-04	5.21E+00	2.37E-03	2.74E-02

Stream Number:	FRP01
Stream Name:	Waste feed from DOE to LAW Feed Receipt
Configuration:	MRQ-05-0049.acmf
Run Date / Time:	12/14/2005 - 1:42:25 PM
Run Data File:	H:\ACM v3.1\MRQ-05-0049\MRQ_05_0049A_Streams.csv

Stream Properties			
Variable	Value	Units	
Density	1.26E+00	g/cm^3	(does not include solid phase)
Enthalpy	-1.54E+07	BTU/hr	
Mass Flow	2.60E+03	Lb/hr	
	6.23E+04	Lb/day	
Volumetric Flow	4.12E+00	GPM	(does not include solid phase)
	5.50E-01	ft^3/min	(does not include solid phase)
Molar Flow	1.28E+02	Lbmol/hr	
Molecular Weight	1.99E+01	Lb/Lbmol	
Pressure	1.00E+03	mbar	
Temperature	2.50E+01	C	
Na Molarity	4.00E+00	mol/L	
pH	1.44E+01	pH	
Total TRU	4.24E-04	Ci/L	
Total Activity	2.26E+00	Ci/L	

Component	Aqueous Comp			Solid Comp	Gaseous (1)		Total Comp		
Unit	mol/L	Lb/gal	Lb/day	Lb/day	mol/L	Lb/day	Lb/day	mt/day	g/sec
Total	6.19E+01	1.03E+01	6.09E+04	0.00E+00	0.00E+00	0.00E+00	6.09E+04	2.77E+01	3.20E+02
Ag^+	3.17E-05	2.85E-05	1.69E-01	0.00E+00	0.00E+00	0.00E+00	1.69E-01	7.69E-05	8.89E-04
Al^{+3}	3.84E-01	8.64E-02	5.12E+02	0.00E+00	0.00E+00	0.00E+00	5.12E+02	2.33E-01	2.70E+00
As^{+3}	1.40E-04	8.73E-05	5.18E-01	0.00E+00	0.00E+00	0.00E+00	5.18E-01	2.35E-04	2.72E-03
B^{+3}	2.32E-03	2.09E-04	1.24E+00	0.00E+00	0.00E+00	0.00E+00	1.24E+00	5.64E-04	6.52E-03
Ba^{+2}	2.91E-05	3.34E-05	1.98E-01	0.00E+00	0.00E+00	0.00E+00	1.98E-01	8.99E-05	1.04E-03
Bi^{+3}	3.43E-05	5.99E-05	3.55E-01	0.00E+00	0.00E+00	0.00E+00	3.55E-01	1.61E-04	1.87E-03
Ca^{+2}	1.98E-03	6.61E-04	3.92E+00	0.00E+00	0.00E+00	0.00E+00	3.92E+00	1.78E-03	2.06E-02
Cd^{+2}	5.41E-05	5.07E-05	3.01E-01	0.00E+00	0.00E+00	0.00E+00	3.01E-01	1.37E-04	1.58E-03
Ce^{+3}	6.69E-05	7.83E-05	4.64E-01	0.00E+00	0.00E+00	0.00E+00	4.64E-01	2.11E-04	2.44E-03
Cl^-	6.17E-02	1.82E-02	1.08E+02	0.00E+00	0.00E+00	0.00E+00	1.08E+02	4.92E-02	5.69E-01
CO	0.00E+00	0.00E+00	0.00E+00	0.00E+00	0.00E+00	0.00E+00	0.00E+00	0.00E+00	0.00E+00
CO_2	0.00E+00	0.00E+00	0.00E+00	0.00E+00	0.00E+00	0.00E+00	0.00E+00	0.00E+00	0.00E+00
CO_3^{-2}	3.07E-01	1.54E-01	9.10E+02	0.00E+00	0.00E+00	0.00E+00	9.10E+02	4.14E-01	4.79E+00
Cr^{+3}	9.19E-03	3.99E-03	2.36E+01	0.00E+00	0.00E+00	0.00E+00	2.36E+01	1.07E-02	1.24E-01
Cu^{+2}	5.35E-05	2.84E-05	1.68E-01	0.00E+00	0.00E+00	0.00E+00	1.68E-01	7.65E-05	8.85E-04
F^-	2.47E-02	3.91E-03	2.32E+01	0.00E+00	0.00E+00	0.00E+00	2.32E+01	1.05E-02	1.22E-01
Fe^{+3}	1.39E-03	6.48E-04	3.84E+00	0.00E+00	0.00E+00	0.00E+00	3.84E+00	1.75E-03	2.02E-02
H_2O	5.24E+01	7.88E+00	4.68E+04	0.00E+00	0.00E+00	0.00E+00	4.68E+04	2.13E+01	2.46E+02
$H_2O(b)$	0.00E+00	0.00E+00	0.00E+00	0.00E+00	0.00E+00	0.00E+00	0.00E+00	0.00E+00	0.00E+00
H^+	0.00E+00	0.00E+00	0.00E+00	0.00E+00	0.00E+00	0.00E+00	0.00E+00	0.00E+00	0.00E+00
HCL	0.00E+00	0.00E+00	0.00E+00	0.00E+00	0.00E+00	0.00E+00	0.00E+00	0.00E+00	0.00E+00
HCO3-	0.00E+00	0.00E+00	0.00E+00	0.00E+00	0.00E+00	0.00E+00	0.00E+00	0.00E+00	0.00E+00
H2CO3	0.00E+00	0.00E+00	0.00E+00	0.00E+00	0.00E+00	0.00E+00	0.00E+00	0.00E+00	0.00E+00
HF	0.00E+00	0.00E+00	0.00E+00	0.00E+00	0.00E+00	0.00E+00	0.00E+00	0.00E+00	0.00E+00
Hg^{+2}	5.60E-05	9.38E-05	5.56E-01	0.00E+00	0.00E+00	0.00E+00	5.56E-01	2.53E-04	2.93E-03
HNO_3	0.00E+00	0.00E+00	0.00E+00	0.00E+00	0.00E+00	0.00E+00	0.00E+00	0.00E+00	0.00E+00
K^+	1.31E-01	4.28E-02	2.54E+02	0.00E+00	0.00E+00	0.00E+00	2.54E+02	1.15E-01	1.34E+00
La^{+3}	1.48E-05	1.72E-05	1.02E-01	0.00E+00	0.00E+00	0.00E+00	1.02E-01	4.64E-05	5.37E-04
Li^+	4.20E-04	2.43E-05	1.44E-01	0.00E+00	0.00E+00	0.00E+00	1.44E-01	6.55E-05	7.59E-04
Mg^{+2}	4.42E-04	8.96E-05	5.31E-01	0.00E+00	0.00E+00	0.00E+00	5.31E-01	2.41E-04	2.79E-03
Mn^{+3}	4.79E-04	2.20E-04	1.30E+00	0.00E+00	0.00E+00	0.00E+00	1.30E+00	5.92E-04	6.85E-03
MnO_4^-	0.00E+00	0.00E+00	0.00E+00	0.00E+00	0.00E+00	0.00E+00	0.00E+00	0.00E+00	0.00E+00
N_2	0.00E+00	0.00E+00	0.00E+00	0.00E+00	0.00E+00	0.00E+00	0.00E+00	0.00E+00	0.00E+00
Na^+	4.00E+00	7.67E-01	4.55E+03	0.00E+00	0.00E+00	0.00E+00	4.55E+03	2.07E+00	2.39E+01
NH3	2.82E-03	4.01E-04	2.38E+00	0.00E+00	0.00E+00	0.00E+00	2.38E+00	1.08E-03	1.25E-02
NH4+	0.00E+00	4.01E-04	0.00E+00	0.00E+00	0.00E+00	0.00E+00	0.00E+00	0.00E+00	0.00E+00
Ni^{+2}	7.32E-04	3.59E-04	2.13E+00	0.00E+00	0.00E+00	0.00E+00	2.13E+00	9.66E-04	1.12E-02
NO	0.00E+00	0.00E+00	0.00E+00	0.00E+00	0.00E+00	0.00E+00	0.00E+00	0.00E+00	0.00E+00
NO_2	0.00E+00	0.00E+00	0.00E+00	0.00E+00	0.00E+00	0.00E+00	0.00E+00	0.00E+00	0.00E+00
NO_2^-	8.34E-01	3.20E-01	1.90E+03	0.00E+00	0.00E+00	0.00E+00	1.90E+03	8.63E-01	9.99E+00
NO_3^-	1.13E+00	5.83E-01	3.46E+03	0.00E+00	0.00E+00	0.00E+00	3.46E+03	1.57E+00	1.82E+01
O_2	0.00E+00	0.00E+00	0.00E+00	0.00E+00	0.00E+00	0.00E+00	0.00E+00	0.00E+00	0.00E+00
O^-	0.00E+00	0.00E+00	0.00E+00	0.00E+00	0.00E+00	0.00E+00	0.00E+00	0.00E+00	0.00E+00
OH^-	2.53E+00	3.59E-01	2.13E+03	0.00E+00	0.00E+00	0.00E+00	2.13E+03	9.68E-01	1.12E+01
$OH(b)^-$	0.00E+00	0.00E+00	0.00E+00	0.00E+00	0.00E+00	0.00E+00	0.00E+00	0.00E+00	0.00E+00
Pb^{+2}	1.96E-04	3.39E-04	2.01E+00	0.00E+00	0.00E+00	0.00E+00	2.01E+00	9.15E-04	1.06E-02
Pd^{+2}	1.52E-05	1.35E-05	8.00E-02	0.00E+00	0.00E+00	0.00E+00	8.00E-02	3.64E-05	4.21E-04
PO_4^{-3}	1.57E-02	1.24E-02	7.37E+01	0.00E+00	0.00E+00	0.00E+00	7.37E+01	3.35E-02	3.88E-01
Resin	0.00E+00	0.00E+00	0.00E+00	0.00E+00	0.00E+00	0.00E+00	0.00E+00	0.00E+00	0.00E+00
Rh^{+3}	1.47E-05	1.26E-05	7.48E-02	0.00E+00	0.00E+00	0.00E+00	7.48E-02	3.40E-05	3.94E-04
Ru^{+3}	2.18E-05	1.84E-05	1.09E-01	0.00E+00	0.00E+00	0.00E+00	1.09E-01	4.96E-05	5.74E-04
S^{+6}	0.00E+00	0.00E+00	0.00E+00	0.00E+00	0.00E+00	0.00E+00	0.00E+00	0.00E+00	0.00E+00
SiO2	2.96E-03	1.48E-03	8.80E+00	0.00E+00	0.00E+00	0.00E+00	8.80E+00	4.00E-03	4.63E-02
SiO_4^{-4}	0.00E+00	0.00E+00	0.00E+00	0.00E+00	0.00E+00	0.00E+00	0.00E+00	0.00E+00	0.00E+00
SO_2	0.00E+00	0.00E+00	0.00E+00	0.00E+00	0.00E+00	0.00E+00	0.00E+00	0.00E+00	0.00E+00
SO_4^{-2}	3.74E-02	3.00E-02	1.78E+02	0.00E+00	0.00E+00	0.00E+00	1.78E+02	8.09E-02	9.36E-01
Sr^{+2}	6.95E-06	5.08E-06	3.01E-02	0.00E+00	0.00E+00	0.00E+00	3.01E-02	1.37E-05	1.59E-04
Sucrose	0.00E+00	0.00E+00	0.00E+00	0.00E+00	0.00E+00	0.00E+00	0.00E+00	0.00E+00	0.00E+00
Ti^{+4}	2.44E-05	9.75E-06	5.78E-02	0.00E+00	0.00E+00	0.00E+00	5.78E-02	2.63E-05	3.04E-04
Zn^{+2}	9.13E-05	4.98E-05	2.95E-01	0.00E+00	0.00E+00	0.00E+00	2.95E-01	1.34E-04	1.55E-03
Zr^{+4}	6.74E-05	5.13E-05	3.04E-01	0.00E+00	0.00E+00	0.00E+00	3.04E-01	1.38E-04	1.60E-03

Components	Aqueous Comp			Solid Comp	Gaseous		Total Comp		
Unit	mol/L	Lb/gal	Lb/day	Lb/day	mol/L	Lb/day	Lb/day	Mt/day	g/sec
Total	1.58E-02	1.16E-02	6.88E+01	0.00E+00	0.00E+00	0.00E+00	6.88E+01	3.13E-02	3.62E-01
$C_2O_4^{-2}$	1.58E-02	1.16E-02	6.88E+01	0.00E+00	0.00E+00	0.00E+00	6.88E+01	3.13E-02	3.62E-01
Formate	0.00E+00	0.00E+00	0.00E+00	0.00E+00	0.00E+00	0.00E+00	0.00E+00	0.00E+00	0.00E+00
Acetate	0.00E+00	0.00E+00	0.00E+00	0.00E+00	0.00E+00	0.00E+00	0.00E+00	0.00E+00	0.00E+00
Glycolate	0.00E+00	0.00E+00	0.00E+00	0.00E+00	0.00E+00	0.00E+00	0.00E+00	0.00E+00	0.00E+00
IDA	0.00E+00	0.00E+00	0.00E+00	0.00E+00	0.00E+00	0.00E+00	0.00E+00	0.00E+00	0.00E+00
Citrate	0.00E+00	0.00E+00	0.00E+00	0.00E+00	0.00E+00	0.00E+00	0.00E+00	0.00E+00	0.00E+00
HEDTA	0.00E+00	0.00E+00	0.00E+00	0.00E+00	0.00E+00	0.00E+00	0.00E+00	0.00E+00	0.00E+00
EDTA	0.00E+00	0.00E+00	0.00E+00	0.00E+00	0.00E+00	0.00E+00	0.00E+00	0.00E+00	0.00E+00

Rad. Comp	Aqueous Rad. Comp			Solids Rad. Comp (1)			Total Rad. Comp (1)		
Unit	Ci/L	Ci/day	Lb/day	Ci/L	Ci/day	Lb/day	Ci/L	Ci/day	Lb/day
Total	2.26E+00	5.08E+04	2.65E+01	0.00E+00	0.00E+00	0.00E+00	2.26E+00	5.08E+04	2.65E+01
^{241}Am	2.98E-04	6.69E+00	4.30E-03	0.00E+00	0.00E+00	0.00E+00	2.98E-04	6.69E+00	4.30E-03
^{243}Am	1.95E-07	4.37E-03	4.83E-05	0.00E+00	0.00E+00	0.00E+00	1.95E-07	4.37E-03	4.83E-05
^{14}C	6.09E-06	1.37E-01	6.75E-05	0.00E+00	0.00E+00	0.00E+00	6.09E-06	1.37E-01	6.75E-05
^{60}Co	4.00E-05	8.97E-01	1.75E-06	0.00E+00	0.00E+00	0.00E+00	4.00E-05	8.97E-01	1.75E-06
^{243}Cm	3.22E-08	7.22E-04	3.15E-08	0.00E+00	0.00E+00	0.00E+00	3.22E-08	7.22E-04	3.15E-08
^{244}Cm	7.61E-07	1.71E-02	4.65E-07	0.00E+00	0.00E+00	0.00E+00	7.61E-07	1.71E-02	4.65E-07
^{137}Cs	2.17E+00	4.87E+04	1.24E+00	0.00E+00	0.00E+00	0.00E+00	2.17E+00	4.87E+04	1.24E+00
^{152}Eu	2.24E-06	5.03E-02	6.38E-07	0.00E+00	0.00E+00	0.00E+00	2.24E-06	5.03E-02	6.38E-07
^{154}Eu	4.65E-04	1.04E+01	8.51E-05	0.00E+00	0.00E+00	0.00E+00	4.65E-04	1.04E+01	8.51E-05
^{155}Eu	1.34E-04	3.02E+00	1.37E-05	0.00E+00	0.00E+00	0.00E+00	1.34E-04	3.02E+00	1.37E-05
^{3}H	5.19E-05	1.17E+00	2.67E-07	0.00E+00	0.00E+00	0.00E+00	5.19E-05	1.17E+00	2.67E-07
^{129}I	1.86E-07	4.17E-03	5.21E-02	0.00E+00	0.00E+00	0.00E+00	1.86E-07	4.17E-03	5.21E-02
^{63}Ni	7.20E-04	1.62E+01	6.27E-04	0.00E+00	0.00E+00	0.00E+00	7.20E-04	1.62E+01	6.27E-04
^{237}Np	2.36E-07	5.30E-03	1.66E-02	0.00E+00	0.00E+00	0.00E+00	2.36E-07	5.30E-03	1.66E-02
^{238}Pu	1.33E-06	2.99E-02	3.85E-06	0.00E+00	0.00E+00	0.00E+00	1.33E-06	2.99E-02	3.85E-06
^{239}Pu	1.84E-05	4.14E-01	1.47E-02	0.00E+00	0.00E+00	0.00E+00	1.84E-05	4.14E-01	1.47E-02
^{240}Pu	4.78E-06	1.07E-01	1.04E-03	0.00E+00	0.00E+00	0.00E+00	4.78E-06	1.07E-01	1.04E-03
^{241}Pu	1.00E-04	2.25E+00	4.82E-05	0.00E+00	0.00E+00	0.00E+00	1.00E-04	2.25E+00	4.82E-05
^{242}Pu	5.06E-10	1.14E-05	6.36E-06	0.00E+00	0.00E+00	0.00E+00	5.06E-10	1.14E-05	6.36E-06
^{125}Sb	2.77E-04	6.22E+00	1.32E-05	0.00E+00	0.00E+00	0.00E+00	2.77E-04	6.22E+00	1.32E-05
^{151}Sm	3.89E-03	8.74E+01	7.32E-03	0.00E+00	0.00E+00	0.00E+00	3.89E-03	8.74E+01	7.32E-03
^{126}Sn	4.41E-06	9.90E-02	1.92E-02	0.00E+00	0.00E+00	0.00E+00	4.41E-06	9.90E-02	1.92E-02
^{90}Sr	8.64E-02	1.94E+03	3.10E-02	0.00E+00	0.00E+00	0.00E+00	8.64E-02	1.94E+03	3.10E-02
^{99}Tc	7.67E-04	1.72E+01	2.24E+00	0.00E+00	0.00E+00	0.00E+00	7.67E-04	1.72E+01	2.24E+00
^{232}Th	7.17E-09	1.61E-04	3.22E+00	0.00E+00	0.00E+00	0.00E+00	7.17E-09	1.61E-04	3.22E+00
^{233}U	2.39E-07	5.36E-03	1.23E-03	0.00E+00	0.00E+00	0.00E+00	2.39E-07	5.36E-03	1.23E-03
^{234}U	1.70E-07	3.81E-03	1.35E-03	0.00E+00	0.00E+00	0.00E+00	1.70E-07	3.81E-03	1.35E-03
^{235}U	6.68E-09	1.50E-04	1.53E-01	0.00E+00	0.00E+00	0.00E+00	6.68E-09	1.50E-04	1.53E-01
^{236}U	1.14E-08	2.57E-04	8.76E-03	0.00E+00	0.00E+00	0.00E+00	1.14E-08	2.57E-04	8.76E-03
^{238}U	1.32E-07	2.97E-03	1.95E+01	0.00E+00	0.00E+00	0.00E+00	1.32E-07	2.97E-03	1.95E+01

(1) All radionuclides in gaseous streams are assumed to exist as solid particulate.

CAS Comp	Organic Components				
Unit	mol/L	Lb/gal	Lb/day	Mt/day	g/sec
Total	4.06E-01	2.19E-01	1.30E+03	5.92E-01	6.85E+00
50-32-8	1.51E-04	3.18E-04	1.89E+00	8.57E-04	9.92E-03
56-23-5	2.60E-05	3.34E-05	1.98E-01	9.00E-05	1.04E-03
57-14-7	9.98E-04	5.01E-04	2.97E+00	1.35E-03	1.56E-02
58-90-2	2.59E-04	5.01E-04	2.97E+00	1.35E-03	1.56E-02
59-89-2	5.17E-04	5.01E-04	2.97E+00	1.35E-03	1.56E-02
60-35-5	1.69E-04	8.33E-05	4.94E-01	2.25E-04	2.60E-03
62-75-9	8.10E-04	5.01E-04	2.97E+00	1.35E-03	1.56E-02
64-19-7	3.61E-01	1.81E-01	1.07E+03	4.88E-01	5.64E+00
71-43-2	5.12E-05	3.34E-05	1.98E-01	9.00E-05	1.04E-03
75-05-8	2.44E-04	8.36E-05	4.96E-01	2.25E-04	2.61E-03
75-12-7	1.33E-03	5.00E-04	2.96E+00	1.35E-03	1.56E-02
76-15-3	6.47E-05	8.34E-05	4.95E-01	2.25E-04	2.60E-03
79-01-6	7.61E-05	8.35E-05	4.95E-01	2.25E-04	2.60E-03
83-32-9	3.89E-04	5.01E-04	2.97E+00	1.35E-03	1.56E-02
84-66-2	2.70E-04	5.01E-04	2.97E+00	1.35E-03	1.56E-02
84-74-2	2.16E-04	5.02E-04	2.98E+00	1.35E-03	1.57E-02
87-68-3	3.83E-05	8.33E-05	4.94E-01	2.25E-04	2.60E-03
88-89-1	2.62E-04	5.01E-04	2.97E+00	1.35E-03	1.56E-02
91-20-3	1.56E-05	1.67E-05	9.89E-02	4.50E-05	5.20E-04
95-50-1	2.72E-05	3.34E-05	1.98E-01	8.99E-05	1.04E-03
98-86-2	3.32E-04	3.34E-04	1.98E+00	9.00E-04	1.04E-02
100-21-0	3.61E-04	5.00E-04	2.97E+00	1.35E-03	1.56E-02
101-84-8	5.88E-05	8.35E-05	4.95E-01	2.25E-04	2.61E-03
106-93-4	2.13E-05	3.34E-05	1.98E-01	9.00E-05	1.04E-03
106-97-8	1.72E-04	8.34E-05	4.95E-01	2.25E-04	2.60E-03
106-99-0	7.39E-05	3.34E-05	1.98E-01	8.99E-05	1.04E-03
108-87-2	1.02E-04	8.36E-05	4.96E-01	2.25E-04	2.61E-03
108-88-3	4.34E-05	3.34E-05	1.98E-01	8.99E-05	1.04E-03
108-95-2	6.38E-04	5.01E-04	2.97E+00	1.35E-03	1.56E-02
110-54-3	1.16E-04	8.34E-05	4.95E-01	2.25E-04	2.60E-03
110-82-7	1.19E-04	8.36E-05	4.96E-01	2.25E-04	2.61E-03
111-84-2	7.80E-05	8.35E-05	4.95E-01	2.25E-04	2.60E-03
120-12-7	3.37E-04	5.01E-04	2.97E+00	1.35E-03	1.56E-02
120-82-1	5.51E-05	8.34E-05	4.95E-01	2.25E-04	2.60E-03
122-39-4	1.18E-04	1.67E-04	9.88E-01	4.49E-04	5.20E-03
126-73-8	1.50E-04	3.33E-04	1.98E+00	8.99E-04	1.04E-02
127-18-4	2.41E-05	3.34E-05	1.98E-01	8.99E-05	1.04E-03
129-00-0	2.97E-04	5.01E-04	2.97E+00	1.35E-03	1.56E-02
132-64-9	3.57E-04	5.01E-04	2.97E+00	1.35E-03	1.56E-02
144-62-7	3.33E-02	2.50E-02	1.48E+02	6.74E-02	7.81E-01
193-39-5	2.17E-04	5.00E-04	2.97E+00	1.35E-03	1.56E-02
206-44-0	2.97E-04	5.01E-04	2.97E+00	1.35E-03	1.56E-02
208-96-8	3.94E-04	5.00E-04	2.97E+00	1.35E-03	1.56E-02
603-34-9	2.45E-04	5.02E-04	2.97E+00	1.35E-03	1.56E-02
621-64-7	4.61E-04	5.01E-04	2.97E+00	1.35E-03	1.56E-02
1321-64-8	2.00E-04	5.01E-04	2.97E+00	1.35E-03	1.56E-02
1336-36-3	2.01E-06	5.40E-06	3.20E-02	1.46E-05	1.68E-04
3697-24-3	2.48E-04	5.02E-04	2.97E+00	1.35E-03	1.56E-02
4170-30-3	1.43E-04	8.36E-05	4.96E-01	2.25E-04	2.61E-03
10061-01-5	3.60E-05	3.33E-05	1.98E-01	8.99E-05	1.04E-03
25140-60-3	2.61E-04	5.02E-04	2.97E+00	1.35E-03	1.56E-02

Stream Number:	PVP01
Stream Name:	Pretreatment vessel vents feed to caustic scrubber
Configuration:	MRQ-05-0049.acmf
Run Date / Time:	12/14/2005 - 1:42:25 PM
Run Data File:	H:\ACM v3.1\MRQ-05-0049\MRQ_05_0049A_Streams.csv

Stream Properties			
Variable	Value	Units	
Density	1.10E-03	g/cm^3	(does not include solid phase)
Enthalpy	-4.75E+06	BTU/hr	
Mass Flow	3.28E+04	Lb/hr	
	7.87E+05	Lb/day	
Volumetric Flow	5.95E+04	GPM	(does not include solid phase)
	7.96E+03	ft^3/min	(does not include solid phase)
Molar Flow	1.15E+03	Lbmol/hr	
Molecular Weight	2.84E+01	Lb/Lbmol	
Pressure	9.68E+02	mbar	
Temperature	2.89E+01	C	
Na Molarity	0.00E+00	mol/L	
pH	5.55E+00	pH	
Total TRU	9.27E-12	Ci/L	
Total Activity	2.10E-09	Ci/L	

Component	Aqueous Comp			Solid Comp	Gaseous (1)		Total Comp		
Unit	mol/L	Lb/gal	Lb/day	Lb/day	mol/L	Lb/day	Lb/day	mt/day	g/sec
Total	1.69E-07	2.65E-08	2.27E+00	2.59E-02	3.86E-02	7.84E+05	7.84E+05	3.56E+02	4.13E+03
Ag^+	5.18E-14	4.66E-14	3.99E-06	1.64E-05	0.00E+00	0.00E+00	2.04E-05	9.25E-09	1.07E-07
Al^{+3}	4.93E-10	1.11E-10	9.52E-03	1.90E-03	0.00E+00	0.00E+00	1.14E-02	5.19E-06	6.01E-05
As^{+3}	2.09E-13	1.30E-13	1.12E-05	1.92E-06	0.00E+00	0.00E+00	1.31E-05	5.96E-09	6.89E-08
B^{+3}	3.68E-12	3.32E-13	2.85E-05	4.82E-04	0.00E+00	0.00E+00	5.10E-04	2.32E-07	2.68E-06
Ba^{+2}	4.91E-14	5.63E-14	4.83E-06	1.51E-05	0.00E+00	0.00E+00	1.99E-05	9.04E-09	1.05E-07
Bi^{+3}	3.00E-14	5.23E-14	4.49E-06	4.24E-05	0.00E+00	0.00E+00	4.68E-05	2.13E-08	2.46E-07
Ca^{+2}	7.54E-11	2.52E-11	2.16E-03	3.10E-03	0.00E+00	0.00E+00	5.26E-03	2.39E-06	2.77E-05
Cd^{+2}	4.86E-14	4.56E-14	3.91E-06	3.34E-05	0.00E+00	0.00E+00	3.73E-05	1.69E-08	1.96E-07
Ce^{+3}	1.89E-12	2.21E-12	1.89E-04	1.71E-05	0.00E+00	0.00E+00	2.07E-04	9.39E-08	1.09E-06
Cl^-	6.53E-11	1.93E-11	1.66E-03	1.08E-05	0.00E+00	0.00E+00	1.67E-03	7.57E-07	8.77E-06
CO	4.90E-35	1.15E-35	9.82E-28	0.00E+00	1.36E-71	2.73E-64	9.82E-28	4.46E-31	5.17E-30
CO_2	8.00E-15	2.94E-15	2.52E-07	0.00E+00	1.45E-12	4.56E-05	4.59E-05	2.08E-08	2.41E-07
CO_3^{-2}	4.60E-10	2.30E-10	1.97E-02	1.82E-03	0.00E+00	0.00E+00	2.16E-02	9.80E-06	1.13E-04
Cr^{+3}	8.09E-12	3.51E-12	3.01E-04	2.85E-05	0.00E+00	0.00E+00	3.29E-04	1.50E-07	1.73E-06
Cu^{+2}	8.75E-14	4.64E-14	3.98E-06	6.19E-06	0.00E+00	0.00E+00	1.02E-05	4.62E-09	5.35E-08
F^-	2.82E-11	4.47E-12	3.83E-04	1.79E-04	0.00E+00	0.00E+00	5.62E-04	2.56E-07	2.96E-06
Fe^{+3}	2.83E-12	1.32E-12	1.13E-04	2.47E-03	0.00E+00	0.00E+00	2.58E-03	1.17E-06	1.36E-05
H_2O	1.58E-07	2.38E-08	2.04E+00	0.00E+00	1.55E-03	2.00E+04	2.00E+04	9.08E+00	1.05E+02
$H_2O(b)$	0.00E+00	0.00E+00	0.00E+00	0.00E+00	0.00E+00	0.00E+00	0.00E+00	0.00E+00	0.00E+00
H^+	7.69E-11	6.47E-13	5.55E-05	0.00E+00	0.00E+00	0.00E+00	5.55E-05	2.52E-08	2.92E-07
HCL	0.00E+00	0.00E+00	0.00E+00	0.00E+00	8.61E-35	2.25E-27	2.25E-27	1.02E-30	1.18E-29
HCO3-	4.08E-16	2.08E-16	1.78E-08	0.00E+00	0.00E+00	0.00E+00	1.78E-08	8.10E-12	9.38E-11
H2CO3	8.00E-28	4.14E-28	3.55E-20	0.00E+00	0.00E+00	0.00E+00	3.55E-20	1.61E-23	1.87E-22
HF	0.00E+00	0.00E+00	0.00E+00	0.00E+00	1.13E-35	1.62E-28	1.62E-28	7.35E-32	8.51E-31
Hg^{+2}	8.38E-14	1.40E-13	1.20E-05	4.34E-05	0.00E+00	0.00E+00	5.55E-05	2.52E-08	2.92E-07
HNO_3	0.00E+00	0.00E+00	0.00E+00	0.00E+00	1.05E-33	4.72E-26	4.72E-26	2.15E-29	2.48E-28
K^+	1.41E-10	4.60E-11	3.95E-03	2.99E-05	0.00E+00	0.00E+00	3.98E-03	1.81E-06	2.09E-05
La^{+3}	2.22E-14	2.57E-14	2.21E-06	2.51E-05	0.00E+00	0.00E+00	2.73E-05	1.24E-08	1.44E-07
Li^+	2.95E-12	1.71E-13	1.47E-05	1.12E-05	0.00E+00	0.00E+00	2.59E-05	1.18E-08	1.36E-07
Mg^{+2}	6.64E-12	1.35E-12	1.16E-04	3.70E-04	0.00E+00	0.00E+00	4.86E-04	2.21E-07	2.56E-06
Mn^{+3}	7.36E-13	3.37E-13	2.89E-05	2.02E-04	0.00E+00	0.00E+00	2.31E-04	1.05E-07	1.21E-06
MnO_4^-	0.00E+00	0.00E+00	0.00E+00	0.00E+00	0.00E+00	0.00E+00	0.00E+00	0.00E+00	0.00E+00
N_2	3.18E-12	7.42E-13	6.37E-05	0.00E+00	2.92E-02	5.86E+05	5.86E+05	2.66E+02	3.08E+03
Na^+	3.77E-09	7.23E-10	6.20E-02	2.02E-03	0.00E+00	0.00E+00	6.40E-02	2.91E-05	3.37E-04
NH3	5.47E-12	7.78E-13	6.67E-05	0.00E+00	1.26E-10	1.53E-03	1.60E-03	7.28E-07	8.42E-06
NH4+	3.02E-15	7.78E-13	3.90E-08	0.00E+00	0.00E+00	0.00E+00	3.90E-08	1.77E-11	2.05E-10
Ni^{+2}	6.88E-13	3.37E-13	2.89E-05	5.41E-05	0.00E+00	0.00E+00	8.30E-05	3.77E-08	4.37E-07
NO	3.98E-34	9.97E-35	8.54E-27	0.00E+00	0.00E+00	0.00E+00	8.54E-27	3.88E-30	4.50E-29
NO_2	0.00E+00	0.00E+00	0.00E+00	0.00E+00	8.65E-50	2.85E-42	2.85E-42	1.29E-45	1.50E-44
NO_2^-	7.39E-10	2.84E-10	2.43E-02	5.04E-04	0.00E+00	0.00E+00	2.48E-02	1.13E-05	1.31E-04
NO_3^-	1.49E-09	7.73E-10	6.63E-02	4.10E-04	0.00E+00	0.00E+00	6.67E-02	3.03E-05	3.51E-04
O_2	1.02E-12	2.73E-13	2.34E-05	0.00E+00	7.77E-03	1.78E+05	1.78E+05	8.09E+01	9.36E+02
O^-	0.00E+00	0.00E+00	0.00E+00	1.33E-03	0.00E+00	0.00E+00	1.33E-03	6.02E-07	6.97E-06
OH^-	3.52E-09	5.00E-10	4.29E-02	7.51E-03	0.00E+00	0.00E+00	5.04E-02	2.29E-05	2.65E-04
OH(b)	5.30E-17	7.52E-18	6.45E-10	1.98E-19	0.00E+00	0.00E+00	6.45E-10	2.93E-13	3.39E-12
Pb^{+2}	1.72E-13	2.97E-13	2.54E-05	6.94E-05	0.00E+00	0.00E+00	9.48E-05	4.31E-08	4.99E-07
Pd^{+2}	1.35E-14	1.20E-14	1.03E-06	2.90E-06	0.00E+00	0.00E+00	3.93E-06	1.79E-09	2.07E-08
PO_4^{-3}	2.34E-11	1.86E-11	1.59E-03	5.34E-04	0.00E+00	0.00E+00	2.13E-03	9.66E-07	1.12E-05
Resin	0.00E+00	0.00E+00	0.00E+00	0.00E+00	0.00E+00	0.00E+00	0.00E+00	0.00E+00	0.00E+00
Rh^{+3}	1.28E-14	1.10E-14	9.41E-07	9.21E-07	0.00E+00	0.00E+00	1.86E-06	8.47E-10	9.80E-09
Ru^{+3}	1.90E-14	1.60E-14	1.37E-06	8.34E-06	0.00E+00	0.00E+00	9.72E-06	4.42E-09	5.11E-08
S^{-6}	0.00E+00	0.00E+00	0.00E+00	3.44E-20	0.00E+00	0.00E+00	3.44E-20	1.56E-23	1.81E-22
SiO2	7.83E-12	3.92E-12	3.36E-04	1.84E-03	0.00E+00	0.00E+00	2.18E-03	9.91E-07	1.15E-05
SiO_4^{-4}	4.31E-19	3.31E-19	2.84E-11	2.77E-10	0.00E+00	0.00E+00	3.05E-10	1.39E-13	1.60E-12
SO_2	1.57E-37	8.39E-38	7.19E-30	0.00E+00	0.00E+00	0.00E+00	7.19E-30	3.27E-33	3.78E-32
SO_4^{-2}	3.58E-11	2.87E-11	2.46E-03	1.20E-04	0.00E+00	0.00E+00	2.58E-03	1.17E-06	1.36E-05
Sr^{+2}	6.86E-15	5.02E-15	4.30E-07	4.50E-06	0.00E+00	0.00E+00	4.93E-06	2.24E-09	2.59E-08
Sucrose	0.00E+00	0.00E+00	0.00E+00	4.32E-37	0.00E+00	0.00E+00	4.32E-37	1.96E-40	2.27E-39
Ti^{+4}	4.10E-14	1.64E-14	1.40E-06	5.43E-06	0.00E+00	0.00E+00	6.84E-06	3.11E-09	3.60E-08
Zn^{+2}	1.39E-13	7.61E-14	6.52E-06	1.11E-04	0.00E+00	0.00E+00	1.17E-04	5.33E-08	6.17E-07
Zr^{+4}	1.13E-13	8.61E-14	7.38E-06	6.10E-04	0.00E+00	0.00E+00	6.18E-04	2.81E-07	3.25E-06

Components	Aqueous Comp			Solid Comp	Gaseous		Total Comp		
Unit	mol/L	Lb/gal	Lb/day	Lb/day	mol/L	Lb/day	Lb/day	Mt/day	g/sec
Total	1.46E-11	1.07E-11	9.18E-04	3.46E-03	0.00E+00	0.00E+00	4.38E-03	1.99E-06	2.30E-05
$C_2O_4^{-2}$	1.46E-11	1.07E-11	9.18E-04	3.46E-03	0.00E+00	0.00E+00	4.38E-03	1.99E-06	2.30E-05
Formate	1.98E-18	7.46E-19	6.39E-11	7.80E-10	0.00E+00	0.00E+00	8.44E-10	3.84E-13	4.44E-12
Acetate	1.54E-18	7.58E-19	6.50E-11	7.93E-10	0.00E+00	0.00E+00	8.58E-10	3.90E-13	4.51E-12
Glycolate	1.02E-17	6.41E-18	5.50E-10	7.85E-10	0.00E+00	0.00E+00	1.33E-09	6.06E-13	7.02E-12
IDA	5.17E-18	5.75E-18	4.93E-10	2.45E-10	0.00E+00	0.00E+00	7.38E-10	3.35E-13	3.88E-12
Citrate	4.73E-19	7.58E-19	6.50E-11	3.14E-10	0.00E+00	0.00E+00	3.79E-10	1.72E-13	2.00E-12
HEDTA	2.21E-18	5.14E-18	4.41E-10	2.95E-10	0.00E+00	0.00E+00	7.36E-10	3.35E-13	3.87E-12
EDTA	2.66E-19	6.49E-19	5.57E-11	3.01E-10	0.00E+00	0.00E+00	3.57E-10	1.62E-13	1.88E-12

Rad. Comp	Aqueous Rad. Comp			Solids Rad. Comp (1)			Total Rad. Comp (1)		
Unit	Ci/L	Ci/day	Lb/day	Ci/L	Ci/day	Lb/day	Ci/L	Ci/day	Lb/day
Total	1.18E-09	3.83E-01	5.54E-04	9.23E-10	3.00E-01	3.61E-03	2.10E-09	6.83E-01	4.17E-03
^{241}Am	2.59E-13	8.41E-05	5.41E-08	6.60E-12	2.14E-03	1.38E-06	6.86E-12	2.23E-03	1.43E-06
^{243}Am	1.69E-16	5.49E-08	6.07E-10	5.33E-16	1.73E-07	1.91E-09	7.02E-16	2.28E-07	2.52E-09
^{14}C	9.10E-15	2.95E-06	1.46E-09	7.76E-16	2.52E-07	1.24E-10	9.88E-15	3.21E-06	1.58E-09
^{60}Co	5.97E-14	1.94E-05	3.78E-11	1.21E-12	3.94E-04	7.67E-10	1.27E-12	4.13E-04	8.05E-10
^{243}Cm	4.80E-17	1.56E-08	6.79E-13	1.53E-14	4.98E-06	2.17E-10	1.54E-14	5.00E-06	2.18E-10
^{244}Cm	1.14E-15	3.69E-07	1.00E-11	3.49E-13	1.13E-04	3.09E-09	3.50E-13	1.14E-04	3.10E-09
^{137}Cs	1.09E-09	3.54E-01	8.99E-06	1.43E-10	4.64E-02	1.18E-06	1.23E-09	4.00E-01	1.02E-05
^{152}Eu	1.95E-15	6.33E-07	8.03E-12	3.51E-14	1.14E-05	1.45E-10	3.71E-14	1.20E-05	1.53E-10
^{154}Eu	4.04E-13	1.31E-04	1.07E-09	3.81E-12	1.24E-03	1.01E-08	4.21E-12	1.37E-03	1.11E-08
^{155}Eu	1.17E-13	3.80E-05	1.72E-10	5.64E-13	1.83E-04	8.30E-10	6.81E-13	2.21E-04	1.00E-09
^{3}H	4.51E-14	1.46E-05	3.36E-12	8.22E-12	2.67E-03	6.12E-10	8.26E-12	2.68E-03	6.15E-10
^{129}I	3.54E-16	1.15E-07	1.44E-06	7.66E-17	2.49E-08	3.10E-07	4.31E-16	1.40E-07	1.75E-06
^{63}Ni	6.42E-13	2.08E-04	8.08E-09	1.32E-13	4.30E-05	1.67E-09	7.74E-13	2.51E-04	9.75E-09
^{237}Np	3.52E-16	1.14E-07	3.57E-07	8.99E-15	2.92E-06	9.12E-06	9.34E-15	3.03E-06	9.48E-06
^{238}Pu	1.16E-15	3.76E-07	4.84E-11	2.57E-14	8.32E-06	1.07E-09	2.68E-14	8.70E-06	1.12E-09
^{239}Pu	1.60E-14	5.21E-06	1.85E-07	2.27E-13	7.37E-05	2.62E-06	2.43E-13	7.90E-05	2.81E-06
^{240}Pu	4.16E-15	1.35E-06	1.31E-08	6.00E-14	1.95E-05	1.89E-07	6.41E-14	2.08E-05	2.02E-07
^{241}Pu	8.73E-14	2.83E-05	6.06E-10	1.61E-12	5.22E-04	1.12E-08	1.70E-12	5.51E-04	1.18E-08
^{242}Pu	3.15E-20	1.02E-11	5.73E-12	5.53E-18	1.80E-09	1.01E-09	5.56E-18	1.81E-09	1.01E-09
^{126}Sb	2.42E-13	7.86E-05	1.67E-10	2.35E-12	7.61E-04	1.62E-09	2.59E-12	8.40E-04	1.78E-09
^{151}Sm	3.39E-12	1.10E-03	9.21E-08	2.83E-11	9.18E-03	7.69E-07	3.17E-11	1.03E-02	8.61E-07
^{126}Sn	3.85E-15	1.25E-06	2.43E-07	1.10E-14	3.57E-06	6.93E-07	1.48E-14	4.82E-06	9.36E-07
^{90}Sr	8.35E-11	2.71E-02	4.32E-07	7.24E-10	2.35E-01	3.75E-06	8.07E-10	2.62E-01	4.18E-06
^{99}Tc	1.15E-12	3.72E-04	4.84E-05	2.89E-12	9.39E-04	1.22E-04	4.04E-12	1.31E-03	1.70E-04
^{232}Th	1.07E-17	3.47E-09	6.96E-05	2.97E-16	9.64E-08	1.93E-03	3.08E-16	9.99E-08	2.00E-03
^{233}U	3.57E-16	1.16E-07	2.65E-08	2.44E-14	7.90E-06	1.81E-06	2.47E-14	8.02E-06	1.83E-06
^{234}U	2.53E-16	8.21E-08	2.92E-08	1.27E-15	4.11E-07	1.46E-07	1.52E-15	4.93E-07	1.75E-07
^{235}U	9.97E-18	3.23E-09	3.30E-06	3.04E-17	9.86E-09	1.01E-05	4.04E-17	1.31E-08	1.34E-05
^{236}U	1.71E-17	5.54E-09	1.89E-07	4.18E-17	1.36E-08	4.63E-07	5.89E-17	1.91E-08	6.52E-07
^{238}U	1.98E-16	6.42E-08	4.21E-04	7.16E-16	2.32E-07	1.53E-03	9.14E-16	2.97E-07	1.95E-03

(1) All radionuclides in gaseous streams are assumed to exist as solid particulate.

CAS Comp	Organic Components				
Unit	mol/L	Lb/gal	Lb/day	Mt/day	g/sec
Total	6.81E-05	3.53E-05	3.03E+03	1.38E+00	1.59E+01
50-32-8	1.48E-09	3.11E-09	2.66E-01	1.21E-04	1.40E-03
56-23-5	4.95E-09	6.35E-09	5.44E-01	2.47E-04	2.86E-03
57-14-7	3.78E-08	1.89E-08	1.62E+00	7.38E-04	8.54E-03
58-90-2	8.16E-09	1.58E-08	1.35E+00	6.15E-04	7.12E-03
59-89-2	9.58E-08	9.28E-08	7.96E+00	3.62E-03	4.19E-02
60-35-5	3.80E-11	1.87E-11	1.61E-03	7.31E-07	8.46E-06
62-75-9	1.29E-08	7.98E-09	6.84E-01	3.11E-04	3.60E-03
64-19-7	6.69E-05	3.35E-05	2.87E+03	1.31E+00	1.51E+01
71-43-2	9.74E-09	6.35E-09	5.44E-01	2.47E-04	2.86E-03
75-05-8	1.67E-08	5.72E-09	4.91E-01	2.23E-04	2.58E-03
75-12-7	3.74E-11	1.41E-11	1.21E-03	5.48E-07	6.34E-06
76-15-3	1.23E-08	1.59E-08	1.36E+00	6.18E-04	7.15E-03
79-01-6	1.45E-08	1.59E-08	1.36E+00	6.19E-04	7.16E-03
83-32-9	7.21E-08	9.28E-08	7.95E+00	3.61E-03	4.18E-02
84-66-2	2.45E-09	4.55E-09	3.90E-01	1.77E-04	2.05E-03
84-74-2	3.90E-09	9.06E-09	7.77E-01	3.53E-04	4.09E-03
87-68-3	7.28E-09	1.59E-08	1.36E+00	6.18E-04	7.15E-03
88-89-1	8.99E-14	1.72E-13	1.47E-05	6.70E-09	7.76E-08
91-20-3	2.70E-09	2.89E-09	2.48E-01	1.13E-04	1.30E-03
95-50-1	5.04E-09	6.18E-09	5.30E-01	2.41E-04	2.79E-03
98-86-2	1.14E-08	1.14E-08	9.80E-01	4.46E-04	5.16E-03
100-21-0	3.81E-15	5.28E-15	4.53E-07	2.06E-10	2.38E-09
101-84-8	1.09E-08	1.55E-08	1.33E+00	6.03E-04	6.98E-03
106-93-4	3.85E-09	6.04E-09	5.18E-01	2.35E-04	2.72E-03
106-97-8	3.27E-08	1.59E-08	1.36E+00	6.18E-04	7.16E-03
106-99-0	1.41E-08	6.35E-09	5.44E-01	2.47E-04	2.86E-03
108-87-2	1.94E-08	1.59E-08	1.36E+00	6.20E-04	7.17E-03
108-88-3	8.25E-09	6.35E-09	5.44E-01	2.47E-04	2.86E-03
108-95-2	3.70E-09	2.91E-09	2.49E-01	1.13E-04	1.31E-03
110-54-3	2.21E-08	1.59E-08	1.36E+00	6.18E-04	7.16E-03
110-82-7	2.26E-08	1.59E-08	1.36E+00	6.20E-04	7.17E-03
111-84-2	1.48E-08	1.59E-08	1.36E+00	6.19E-04	7.16E-03
120-12-7	3.01E-08	4.47E-08	3.83E+00	1.74E-03	2.02E-02
120-82-1	1.03E-08	1.57E-08	1.34E+00	6.11E-04	7.07E-03
122-39-4	2.46E-09	3.47E-09	2.98E-01	1.35E-04	1.57E-03
126-73-8	4.55E-10	1.01E-09	8.66E-02	3.94E-05	4.56E-04
127-18-4	4.58E-09	6.34E-09	5.44E-01	2.47E-04	2.86E-03
129-00-0	1.23E-08	2.07E-08	1.78E+00	8.08E-04	9.35E-03
132-64-9	5.39E-08	7.57E-08	6.49E+00	2.95E-03	3.41E-02
144-62-7	9.64E-11	7.24E-11	6.21E-03	2.82E-06	3.27E-05
193-39-5	2.82E-07	6.49E-07	5.57E+01	2.53E-02	2.93E-01
206-44-0	5.50E-08	9.29E-08	7.96E+00	3.62E-03	4.19E-02
208-96-8	4.87E-08	6.18E-08	5.30E+00	2.41E-03	2.79E-02
603-34-9	6.12E-09	1.25E-08	1.07E+00	4.86E-04	5.65E-03
621-64-7	8.54E-08	9.28E-08	7.96E+00	3.62E-03	4.19E-02
1321-64-8	3.71E-08	9.29E-08	7.97E+00	3.62E-03	4.19E-02
1336-36-3	3.55E-09	9.55E-09	8.19E-01	3.72E-04	4.31E-03
3697-24-3	4.60E-08	9.29E-08	7.97E+00	3.62E-03	4.19E-02
4170-30-3	4.72E-09	2.76E-09	2.37E-01	1.08E-04	1.25E-03
10061-01-5	6.83E-09	6.32E-09	5.42E-01	2.46E-04	2.85E-03
26140-60-3	4.84E-08	9.30E-08	7.97E+00	3.62E-03	4.19E-02

Stream Number: PJV04
Stream Name: Vapor feed to demister
Configuration: MRQ-05-0049.acmf
Run Date / Time: 12/14/2005 - 1:42:25 PM
Run Data File: H:\ACM v3.1\MRQ-05-0049\MRQ_05_0049A_Streams.csv

Stream Properties			
Variable	Value	Units	
Density	1.15E-03	g/cm^3	(does not include solid phase)
Enthalpy	-8.69E+06	BTU/hr	
Mass Flow	1.71E+05	Lb/hr	
	4.10E+06	Lb/day	
Volumetric Flow	2.96E+05	GPM	(does not include solid phase)
	3.96E+04	ft^3/min	(does not include solid phase)
Molar Flow	5.95E+03	Lbmol/hr	
Molecular Weight	2.87E+01	Lb/Lbmol	
Pressure	9.93E+02	mbar	
Temperature	2.50E+01	C	
Na Molarity	0.00E+00	mol/L	
pH	4.16E+00	pH	
Total TRU	2.55E-12	Ci/L	
Total Activity	4.31E-10	Ci/L	

Component	Aqueous Comp			Solid Comp	Gaseous (1)		Total Comp		
Unit	mol/L	Lb/gal	Lb/day	Lb/day	mol/L	Lb/day	Lb/day	mt/day	g/sec
Total	5.86E-09	9.45E-10	4.03E-01	1.86E-02	4.01E-02	4.10E+06	4.10E+06	1.86E+03	2.16E+04
Ag^+	1.85E-15	1.67E-15	7.13E-07	1.30E-05	0.00E+00	0.00E+00	1.37E-05	6.21E-09	7.19E-08
Al^{+3}	2.25E-11	5.06E-12	2.16E-03	1.79E-03	0.00E+00	0.00E+00	3.95E-03	1.80E-06	2.08E-05
As^{+3}	8.18E-15	5.11E-15	2.18E-06	9.12E-07	0.00E+00	0.00E+00	3.09E-06	1.41E-09	1.63E-08
B^{+3}	1.36E-13	1.22E-14	5.23E-06	8.60E-05	0.00E+00	0.00E+00	9.12E-05	4.14E-08	4.80E-07
Ba^{+2}	1.71E-15	1.95E-15	8.34E-07	1.15E-05	0.00E+00	0.00E+00	1.24E-05	5.63E-09	6.51E-08
Bi^{+3}	2.01E-15	3.51E-15	1.50E-06	6.05E-05	0.00E+00	0.00E+00	6.20E-05	2.82E-08	3.26E-07
Ca^{+2}	1.42E-13	4.76E-14	2.03E-05	7.75E-05	0.00E+00	0.00E+00	9.78E-05	4.45E-08	5.15E-07
Cd^{+2}	3.17E-15	2.97E-15	1.27E-06	4.69E-05	0.00E+00	0.00E+00	4.82E-05	2.19E-08	2.53E-07
Ce^{+3}	6.75E-14	7.90E-14	3.37E-05	1.44E-05	0.00E+00	0.00E+00	4.81E-05	2.19E-08	2.53E-07
Cl^-	3.79E-12	1.12E-12	4.79E-04	1.40E-05	0.00E+00	0.00E+00	4.92E-04	2.24E-07	2.59E-06
CO	1.10E-111	2.57E-112	1.10E-103	0.00E+00	0.00E+00	0.00E+00	1.10E-103	4.99E-107	5.78E-106
CO_2	1.36E-16	4.99E-17	2.13E-08	0.00E+00	4.20E-16	6.58E-08	8.71E-08	3.96E-11	4.58E-10
CO_3^{-2}	1.80E-11	9.01E-12	3.84E-03	1.57E-03	0.00E+00	0.00E+00	5.42E-03	2.46E-06	2.85E-05
Cr^{+3}	5.43E-13	2.36E-13	1.01E-04	3.65E-05	0.00E+00	0.00E+00	1.37E-04	6.23E-08	7.21E-07
Cu^{+2}	3.13E-15	1.66E-15	7.10E-07	4.89E-06	0.00E+00	0.00E+00	5.60E-06	2.55E-09	2.95E-08
F^-	1.78E-12	2.83E-13	1.21E-04	2.54E-04	0.00E+00	0.00E+00	3.75E-04	1.71E-07	1.97E-06
Fe^{+3}	9.72E-14	4.53E-14	1.93E-05	1.84E-03	0.00E+00	0.00E+00	1.86E-03	8.45E-07	9.78E-06
H_2O	5.28E-09	7.93E-10	3.39E-01	0.00E+00	5.63E-04	3.61E+04	3.61E+04	1.64E+01	1.90E+02
$H_2O(b)$	0.00E+00	0.00E+00	0.00E+00	0.00E+00	0.00E+00	0.00E+00	0.00E+00	0.00E+00	0.00E+00
H^+	3.79E-12	3.19E-14	1.36E-05	0.00E+00	0.00E+00	0.00E+00	1.36E-05	6.19E-09	7.17E-08
HCL	0.00E+00	0.00E+00	0.00E+00	0.00E+00	0.00E+00	0.00E+00	0.00E+00	0.00E+00	0.00E+00
HCO3-	1.87E-15	9.51E-16	4.06E-07	9.36E-22	0.00E+00	0.00E+00	4.06E-07	1.84E-10	2.14E-09
H2CO3	0.00E+00	0.00E+00	0.00E+00	0.00E+00	0.00E+00	0.00E+00	0.00E+00	0.00E+00	0.00E+00
HF	0.00E+00	0.00E+00	0.00E+00	0.00E+00	0.00E+00	0.00E+00	0.00E+00	0.00E+00	0.00E+00
Hg^{+2}	3.28E-15	5.49E-15	2.35E-06	2.90E-05	0.00E+00	0.00E+00	3.14E-05	1.43E-08	1.65E-07
HNO_3	0.00E+00	0.00E+00	0.00E+00	0.00E+00	0.00E+00	0.00E+00	0.00E+00	0.00E+00	0.00E+00
K^+	7.79E-12	2.54E-12	1.08E-03	3.59E-05	0.00E+00	0.00E+00	1.12E-03	5.09E-07	5.89E-06
La^{+3}	8.70E-16	1.01E-15	4.30E-07	2.17E-05	0.00E+00	0.00E+00	2.21E-05	1.00E-08	1.16E-07
Li^+	1.18E-13	6.81E-15	2.91E-06	5.37E-06	0.00E+00	0.00E+00	8.28E-06	3.76E-09	4.36E-08
Mg^{+2}	2.59E-14	5.24E-15	2.24E-06	1.60E-05	0.00E+00	0.00E+00	1.82E-05	8.28E-09	9.58E-08
Mn^{+3}	2.80E-14	1.29E-14	5.49E-06	1.69E-04	0.00E+00	0.00E+00	1.75E-04	7.93E-08	9.18E-07
MnO_4^-	0.00E+00	0.00E+00	0.00E+00	0.00E+00	0.00E+00	0.00E+00	0.00E+00	0.00E+00	0.00E+00
N_2	5.53E-14	1.29E-14	5.51E-06	0.00E+00	3.12E-02	3.12E+06	3.12E+06	1.42E+03	1.64E+04
Na^+	2.45E-10	4.71E-11	2.01E-02	2.83E-03	0.00E+00	0.00E+00	2.29E-02	1.04E-05	1.21E-04
NH3	1.67E-13	2.38E-14	1.01E-05	0.00E+00	0.00E+00	0.00E+00	1.01E-05	4.61E-09	5.34E-08
NH4+	1.25E-14	2.38E-14	8.01E-07	4.12E-23	0.00E+00	0.00E+00	8.01E-07	3.64E-10	4.21E-09
Ni^{+2}	4.50E-14	2.20E-14	9.41E-06	7.54E-05	0.00E+00	0.00E+00	8.48E-05	3.88E-08	4.48E-07
NO	6.65E-37	1.67E-37	7.11E-29	0.00E+00	0.00E+00	0.00E+00	7.11E-29	3.23E-32	3.74E-31
NO_2	9.76E-50	3.75E-50	1.60E-41	0.00E+00	0.00E+00	0.00E+00	1.60E-41	7.27E-45	8.42E-44
NO_2^-	4.88E-11	1.87E-11	8.00E-03	7.09E-04	0.00E+00	0.00E+00	8.71E-03	3.96E-06	4.58E-05
NO_3^-	8.58E-11	4.44E-11	1.90E-02	5.47E-04	0.00E+00	0.00E+00	1.95E-02	8.87E-06	1.03E-04
O_2	1.78E-14	4.76E-15	2.03E-06	0.00E+00	8.30E-03	9.46E+05	9.46E+05	4.30E+02	4.98E+03
O^-	0.00E+00	0.00E+00	0.00E+00	2.62E-04	0.00E+00	0.00E+00	2.62E-04	1.19E-07	1.38E-06
OH^-	1.43E-10	2.03E-11	8.68E-03	6.48E-03	0.00E+00	0.00E+00	1.52E-02	6.89E-06	7.97E-05
$OH(b)^-$	2.16E-19	3.07E-20	1.31E-11	6.92E-25	0.00E+00	0.00E+00	1.31E-11	5.96E-15	6.90E-14
Pb^{+2}	1.15E-14	1.99E-14	8.49E-06	9.90E-05	0.00E+00	0.00E+00	1.07E-04	4.88E-08	5.65E-07
Pd^{+2}	8.90E-16	7.90E-16	3.37E-07	4.06E-06	0.00E+00	0.00E+00	4.40E-06	2.00E-09	2.31E-08
PO_4^{-3}	9.18E-13	7.28E-13	3.11E-04	4.47E-04	0.00E+00	0.00E+00	7.57E-04	3.44E-07	3.98E-06
Resin	0.00E+00	0.00E+00	0.00E+00	0.00E+00	0.00E+00	0.00E+00	0.00E+00	0.00E+00	0.00E+00
Rh^{+3}	8.60E-16	7.39E-16	3.16E-07	1.32E-06	0.00E+00	0.00E+00	1.63E-06	7.41E-10	8.58E-09
Ru^{+3}	1.28E-15	1.08E-15	4.61E-07	1.23E-05	0.00E+00	0.00E+00	1.27E-05	5.78E-09	6.69E-08
S^{+6}	0.00E+00	0.00E+00	0.00E+00	3.67E-22	0.00E+00	0.00E+00	3.67E-22	1.67E-25	1.93E-24
SiO2	1.73E-13	8.69E-14	3.71E-05	4.46E-04	0.00E+00	0.00E+00	4.83E-04	2.19E-07	2.54E-06
SiO_4^{-4}	9.10E-26	7.00E-26	2.99E-17	7.91E-12	0.00E+00	0.00E+00	7.91E-12	3.59E-15	4.16E-14
SO_2	1.40E-52	7.48E-53	3.19E-44	0.00E+00	0.00E+00	0.00E+00	3.19E-44	1.45E-47	1.68E-46
SO_4^{-2}	2.19E-12	1.76E-12	7.50E-04	1.61E-04	0.00E+00	0.00E+00	9.11E-04	4.14E-07	4.79E-06
Sr^{+2}	4.57E-16	3.34E-16	1.43E-07	6.44E-06	0.00E+00	0.00E+00	6.59E-06	2.99E-09	3.47E-08
Sucrose	0.00E+00	0.00E+00	0.00E+00	0.00E+00	0.00E+00	0.00E+00	0.00E+00	0.00E+00	0.00E+00
Ti^{+4}	1.43E-15	5.71E-16	2.44E-07	2.73E-06	0.00E+00	0.00E+00	2.98E-06	1.35E-09	1.57E-08
Zn^{+2}	5.35E-15	2.92E-15	1.25E-06	2.00E-05	0.00E+00	0.00E+00	2.13E-05	9.68E-09	1.12E-07
Zr^{+4}	3.94E-15	3.00E-15	1.28E-06	4.48E-04	0.00E+00	0.00E+00	4.49E-04	2.04E-07	2.36E-06

Components	Aqueous Comp			Solid Comp	Gaseous		Total Comp		
Unit	mol/L	Lb/gal	Lb/day	Lb/day	mol/L	Lb/day	Lb/day	Mt/day	g/sec
Total	9.07E-13	6.66E-13	2.84E-04	2.24E-03	0.00E+00	0.00E+00	2.52E-03	1.15E-06	1.33E-05
$C_2O_4^{-2}$	9.07E-13	6.66E-13	2.84E-04	2.24E-03	0.00E+00	0.00E+00	2.52E-03	1.15E-06	1.33E-05
Formate	4.02E-25	1.51E-25	8.44E-17	3.08E-13	0.00E+00	0.00E+00	3.08E-13	1.40E-16	1.62E-15
Acetate	3.11E-25	1.53E-25	6.55E-17	3.13E-13	0.00E+00	0.00E+00	3.13E-13	1.42E-16	1.65E-15
Glycolate	2.07E-24	1.30E-24	5.54E-16	1.54E-13	0.00E+00	0.00E+00	1.54E-13	7.02E-17	8.13E-16
IDA	1.06E-24	1.18E-24	5.03E-16	3.93E-13	0.00E+00	0.00E+00	3.93E-13	1.79E-16	2.07E-15
Citrate	9.69E-26	1.55E-25	6.64E-17	3.37E-13	0.00E+00	0.00E+00	3.37E-13	1.53E-16	1.77E-15
HEDTA	4.54E-25	1.05E-24	4.50E-16	2.76E-13	0.00E+00	0.00E+00	2.77E-13	1.26E-16	1.46E-15
EDTA	5.46E-26	1.33E-25	5.68E-17	2.97E-13	0.00E+00	0.00E+00	2.97E-13	1.35E-16	1.56E-15

Rad. Comp	Aqueous Rad. Comp			Solids Rad. Comp (1)			Total Rad. Comp (1)		
Unit	Ci/L	Ci/day	Lb/day	Ci/L	Ci/day	Lb/day	Ci/L	Ci/day	Lb/day
Total	1.66E-10	2.69E-01	1.13E-04	2.65E-10	4.28E-01	3.12E-03	4.31E-10	6.96E-01	3.23E-03
^{241}Am	1.75E-14	2.82E-05	1.81E-08	1.90E-12	3.08E-03	1.98E-06	1.92E-12	3.10E-03	2.00E-06
^{243}Am	1.14E-17	1.84E-08	2.04E-10	1.54E-16	2.49E-07	2.75E-09	1.65E-16	2.67E-07	2.95E-09
^{14}C	3.57E-16	5.76E-07	2.85E-10	1.34E-16	2.17E-07	1.07E-10	4.91E-16	7.93E-07	3.92E-10
^{60}Co	2.34E-15	3.78E-06	7.37E-12	2.10E-13	3.40E-04	6.62E-10	2.13E-13	3.44E-04	6.69E-10
^{243}Cm	1.88E-18	3.04E-09	1.33E-13	2.66E-15	4.30E-06	1.88E-10	2.66E-15	4.30E-06	1.88E-10
^{244}Cm	4.46E-17	7.20E-08	1.96E-12	6.05E-14	9.77E-05	2.66E-09	6.05E-14	9.78E-05	2.66E-09
^{137}Cs	1.60E-10	2.59E-01	6.58E-06	4.31E-11	6.96E-02	1.77E-06	2.03E-10	3.29E-01	8.34E-06
^{152}Eu	1.31E-16	2.12E-07	2.69E-12	1.01E-14	1.64E-05	2.07E-10	1.03E-14	1.66E-05	2.10E-10
^{154}Eu	2.72E-14	4.40E-05	3.59E-10	1.10E-12	1.77E-03	1.45E-08	1.12E-12	1.82E-03	1.48E-08
^{155}Eu	7.87E-15	1.27E-05	5.77E-11	1.62E-13	2.62E-04	1.19E-09	1.70E-13	2.75E-04	1.25E-09
^{3}H	2.18E-15	3.53E-06	8.10E-13	3.48E-15	5.63E-06	1.29E-12	5.67E-15	9.16E-06	2.10E-12
^{129}I	1.09E-17	1.76E-08	2.19E-07	7.02E-18	1.13E-08	1.42E-07	1.79E-17	2.89E-08	3.61E-07
^{63}Ni	4.22E-14	6.81E-05	2.64E-09	3.65E-14	5.90E-05	2.29E-09	7.87E-14	1.27E-04	4.93E-09
^{237}Np	1.38E-17	2.23E-08	6.99E-08	1.56E-15	2.52E-06	7.87E-06	1.57E-15	2.54E-06	7.94E-06
^{238}Pu	7.81E-17	1.26E-07	1.62E-11	7.39E-15	1.19E-05	1.54E-09	7.47E-15	1.21E-05	1.55E-09
^{239}Pu	1.08E-15	1.75E-06	6.20E-08	6.55E-14	1.06E-04	3.76E-06	6.66E-14	1.08E-04	3.82E-06
^{240}Pu	2.80E-16	4.52E-07	4.39E-09	1.73E-14	2.79E-05	2.71E-07	1.76E-14	2.84E-05	2.76E-07
^{241}Pu	5.87E-15	9.49E-06	2.03E-10	4.64E-13	7.49E-04	1.60E-08	4.70E-13	7.59E-04	1.62E-08
^{242}Pu	2.96E-20	4.79E-11	2.68E-11	1.59E-18	2.57E-09	1.44E-09	1.62E-18	2.62E-09	1.47E-09
^{125}Sb	1.62E-14	2.62E-05	5.58E-11	6.73E-13	1.09E-03	2.31E-09	6.89E-13	1.11E-03	2.37E-09
^{151}Sm	2.28E-13	3.69E-04	3.09E-08	8.14E-12	1.32E-02	1.10E-06	8.37E-12	1.35E-02	1.13E-06
^{126}Sn	2.58E-16	4.17E-07	8.10E-08	3.15E-15	5.09E-06	9.88E-07	3.41E-15	5.51E-06	1.07E-06
^{90}Sr	5.57E-12	9.00E-03	1.44E-07	2.08E-10	3.36E-01	5.37E-06	2.14E-10	3.45E-01	5.51E-06
^{99}Tc	4.49E-14	7.26E-05	9.44E-06	4.83E-13	7.81E-04	1.02E-04	5.28E-13	8.54E-04	1.11E-04
^{232}Th	4.20E-19	6.78E-10	1.36E-05	5.15E-17	8.33E-08	1.67E-03	5.20E-17	8.40E-08	1.68E-03
^{233}U	1.40E-17	2.26E-08	5.17E-09	4.22E-15	6.82E-06	1.56E-06	4.23E-15	6.84E-06	1.56E-06
^{234}U	9.93E-18	1.61E-08	5.70E-09	2.19E-16	3.54E-07	1.26E-07	2.29E-16	3.71E-07	1.32E-07
^{235}U	3.91E-19	6.32E-10	6.45E-07	5.27E-18	8.52E-09	8.69E-06	5.66E-18	9.15E-09	9.34E-06
^{236}U	6.70E-19	1.08E-09	3.69E-08	7.24E-18	1.17E-08	3.99E-07	7.91E-18	1.28E-08	4.36E-07
^{238}U	7.76E-18	1.25E-08	8.22E-05	1.24E-16	2.01E-07	1.32E-03	1.32E-16	2.13E-07	1.40E-03

(1) All radionuclides in gaseous streams are assumed to exist as solid particulate.

CAS Comp	Organic Components				
Unit	mol/L	Lb/gal	Lb/day	Mt/day	g/sec
Total	1.06E-11	6.12E-12	2.61E-03	1.19E-06	1.37E-05
50-32-8	1.00E-14	2.11E-14	9.00E-06	4.09E-09	4.73E-08
56-23-5	5.75E-16	7.38E-16	3.15E-07	1.43E-10	1.66E-09
57-14-7	3.05E-14	1.53E-14	6.54E-06	2.97E-09	3.44E-08
58-90-2	8.19E-15	1.58E-14	6.76E-06	3.07E-09	3.56E-08
59-89-2	1.16E-14	1.12E-14	4.80E-06	2.18E-09	2.53E-08
60-35-5	1.02E-14	5.02E-15	2.14E-06	9.75E-10	1.13E-08
62-75-9	3.22E-14	1.99E-14	8.49E-06	3.86E-09	4.47E-08
64-19-7	8.10E-12	4.06E-12	1.73E-03	7.88E-07	9.12E-06
71-43-2	1.13E-15	7.39E-16	3.15E-07	1.43E-10	1.66E-09
75-05-8	6.86E-15	2.35E-15	1.00E-06	4.56E-10	5.28E-09
75-12-7	8.06E-14	3.03E-14	1.29E-05	5.88E-09	6.80E-08
76-15-3	1.43E-15	1.84E-15	7.87E-07	3.58E-10	4.14E-09
79-01-6	1.68E-15	1.85E-15	7.88E-07	3.58E-10	4.15E-09
83-32-9	8.73E-15	1.12E-14	4.80E-06	2.18E-09	2.52E-08
84-66-2	1.31E-14	2.43E-14	1.04E-05	4.72E-09	5.46E-08
84-74-2	9.45E-15	2.20E-14	9.37E-06	4.26E-09	4.93E-08
87-68-3	8.47E-16	1.84E-15	7.87E-07	3.58E-10	4.14E-09
88-89-1	1.59E-14	3.04E-14	1.30E-05	5.89E-09	6.82E-08
91-20-3	3.59E-16	3.84E-16	1.64E-07	7.46E-11	8.63E-10
95-50-1	6.10E-16	7.49E-16	3.20E-07	1.45E-10	1.68E-09
98-86-2	1.03E-14	1.04E-14	4.44E-06	2.02E-09	2.33E-08
100-21-0	6.11E-14	8.47E-14	3.61E-05	1.64E-08	1.90E-07
101-84-8	1.32E-15	1.87E-15	8.00E-07	3.64E-10	4.21E-09
106-93-4	4.83E-16	7.57E-16	3.23E-07	1.47E-10	1.70E-09
106-97-8	3.80E-15	1.84E-15	7.87E-07	3.58E-10	4.14E-09
106-99-0	1.63E-15	7.37E-16	3.15E-07	1.43E-10	1.66E-09
108-87-2	2.25E-15	1.85E-15	7.89E-07	3.58E-10	4.15E-09
108-88-3	9.60E-16	7.38E-16	3.15E-07	1.43E-10	1.66E-09
108-95-2	3.37E-14	2.64E-14	1.13E-05	5.13E-09	5.94E-08
110-54-3	2.56E-15	1.84E-15	7.87E-07	3.58E-10	4.14E-09
110-82-7	2.63E-15	1.85E-15	7.89E-07	3.58E-10	4.15E-09
111-84-2	1.72E-15	1.85E-15	7.88E-07	3.58E-10	4.14E-09
120-12-7	9.09E-15	1.35E-14	5.77E-06	2.62E-09	3.04E-08
120-82-1	1.23E-15	1.86E-15	7.95E-07	3.61E-10	4.18E-09
122-39-4	4.27E-15	6.03E-15	2.58E-06	1.17E-09	1.36E-08
126-73-8	8.88E-15	1.97E-14	8.43E-06	3.83E-09	4.43E-08
127-18-4	5.33E-16	7.38E-16	3.15E-07	1.43E-10	1.66E-09
129-00-0	1.00E-14	1.69E-14	7.20E-06	3.27E-09	3.79E-08
132-64-9	8.58E-15	1.20E-14	5.14E-06	2.34E-09	2.71E-08
144-62-7	2.02E-12	1.52E-12	6.48E-04	2.94E-07	3.41E-06
193-39-5	1.33E-14	3.06E-14	1.30E-05	5.93E-09	6.86E-08
206-44-0	6.67E-15	1.13E-14	4.80E-06	2.18E-09	2.53E-08
208-96-8	9.97E-15	1.27E-14	5.41E-06	2.46E-09	2.85E-08
603-34-9	8.20E-15	1.68E-14	7.16E-06	3.26E-09	3.77E-08
621-64-7	1.03E-14	1.12E-14	4.80E-06	2.18E-09	2.53E-08
1321-64-8	4.49E-15	1.13E-14	4.80E-06	2.18E-09	2.53E-08
1336-36-3	2.27E-16	6.11E-16	2.61E-07	1.19E-10	1.37E-09
3697-24-3	5.57E-15	1.13E-14	4.81E-06	2.18E-09	2.53E-08
4170-30-3	4.48E-15	2.62E-15	1.12E-06	5.08E-10	5.88E-09
10061-01-5	7.99E-16	7.40E-16	3.16E-07	1.44E-10	1.66E-09
26140-60-3	5.86E-15	1.13E-14	4.81E-06	2.19E-09	2.53E-08

Stream Number:	LMP06
Stream Name:	Melter offgas (primary)
Configuration:	MRQ-05-0049.acmf
Run Date / Time:	12/14/2005 - 1:42:25 PM
Run Data File:	H:\ACM v3.1\MRQ-05-0049\MRQ_05_0049A_Streams.csv

Stream Properties			
Variable	Value	Units	
Density	4.01E-04	g/cm^3	(does not include solid phase)
Enthalpy	-2.53E+07	BTU/hr	
Mass Flow	8.97E+03	Lb/hr	
	2.15E+05	Lb/day	
Volumetric Flow	4.43E+04	GPM	(does not include solid phase)
	5.92E+03	ft^3/min	(does not include solid phase)
Molar Flow	3.90E+02	Lbmol/hr	
Molecular Weight	2.28E+01	Lb/Lbmol	
Pressure	9.83E+02	mbar	
Temperature	4.00E+02	C	
Na Molarity	0.00E+00	mol/L	
pH	0.00E+00	pH	
Total TRU	1.10E-09	Ci/L	
Total Activity	3.68E-07	Ci/L	

Component	Aqueous Comp			Solid Comp	Gaseous (1)		Total Comp		
Unit	mol/L	Lb/gal	Lb/day	Lb/day	mol/L	Lb/day	Lb/day	mt/day	g/sec
Total	0.00E+00	0.00E+00	0.00E+00	1.01E+03	1.76E-02	2.13E+05	2.14E+05	9.72E+01	1.13E+03
Ag^+	0.00E+00	0.00E+00	0.00E+00	1.55E-02	0.00E+00	0.00E+00	1.55E-02	7.06E-06	8.17E-05
Al^{+3}	0.00E+00	0.00E+00	0.00E+00	3.63E+01	0.00E+00	0.00E+00	3.63E+01	1.65E-02	1.91E-01
As^{+3}	0.00E+00	0.00E+00	0.00E+00	2.75E-01	0.00E+00	0.00E+00	2.75E-01	1.25E-04	1.45E-03
B^{+3}	0.00E+00	0.00E+00	0.00E+00	1.13E+02	0.00E+00	0.00E+00	1.13E+02	5.14E-02	5.95E-01
Ba^{+2}	0.00E+00	0.00E+00	0.00E+00	5.32E-03	0.00E+00	0.00E+00	5.32E-03	2.42E-06	2.80E-05
Bi^{+3}	0.00E+00	0.00E+00	0.00E+00	1.20E-02	0.00E+00	0.00E+00	1.20E-02	5.45E-06	6.31E-05
Ca^{+2}	0.00E+00	0.00E+00	0.00E+00	4.30E+01	0.00E+00	0.00E+00	4.30E+01	1.95E-02	2.26E-01
Cd^{+2}	0.00E+00	0.00E+00	0.00E+00	1.05E-01	0.00E+00	0.00E+00	1.05E-01	4.79E-05	5.54E-04
Ce^{+3}	0.00E+00	0.00E+00	0.00E+00	1.20E-01	0.00E+00	0.00E+00	1.20E-01	5.45E-05	6.31E-04
Cl^-	0.00E+00	0.00E+00	0.00E+00	0.00E+00	0.00E+00	0.00E+00	0.00E+00	0.00E+00	0.00E+00
CO	0.00E+00	0.00E+00	0.00E+00	0.00E+00	6.30E-06	9.39E+01	9.39E+01	4.27E-02	4.94E-01
CO_2	0.00E+00	0.00E+00	0.00E+00	0.00E+00	6.30E-04	1.48E+04	1.48E+04	6.71E+00	7.76E+01
CO_3^{-2}	0.00E+00	0.00E+00	0.00E+00	0.00E+00	0.00E+00	0.00E+00	0.00E+00	0.00E+00	0.00E+00
Cr^{+3}	0.00E+00	0.00E+00	0.00E+00	1.72E+00	0.00E+00	0.00E+00	1.72E+00	7.83E-04	9.07E-03
Cu^{+2}	0.00E+00	0.00E+00	0.00E+00	2.25E-03	0.00E+00	0.00E+00	2.25E-03	1.02E-06	1.18E-05
F^-	0.00E+00	0.00E+00	0.00E+00	0.00E+00	0.00E+00	0.00E+00	0.00E+00	0.00E+00	0.00E+00
Fe^{+3}	0.00E+00	0.00E+00	0.00E+00	2.28E+01	0.00E+00	0.00E+00	2.28E+01	1.04E-02	1.20E-01
H_2O	0.00E+00	0.00E+00	0.00E+00	0.00E+00	1.10E-02	1.05E+05	1.05E+05	4.78E+01	5.53E+02
$H_2O(b)$	0.00E+00	0.00E+00	0.00E+00	0.00E+00	0.00E+00	0.00E+00	0.00E+00	0.00E+00	0.00E+00
H^+	0.00E+00	0.00E+00	0.00E+00	0.00E+00	0.00E+00	0.00E+00	0.00E+00	0.00E+00	0.00E+00
HCL	0.00E+00	0.00E+00	0.00E+00	0.00E+00	9.41E-06	1.83E+02	1.83E+02	8.30E-02	9.61E-01
HCO3-	0.00E+00	0.00E+00	0.00E+00	3.26E-15	0.00E+00	0.00E+00	3.26E-15	1.48E-18	1.71E-17
H2CO3	0.00E+00	0.00E+00	0.00E+00	0.00E+00	0.00E+00	0.00E+00	0.00E+00	0.00E+00	0.00E+00
HF	0.00E+00	0.00E+00	0.00E+00	0.00E+00	2.17E-06	2.32E+01	2.32E+01	1.05E-02	1.22E-01
Hg^{+2}	0.00E+00	0.00E+00	0.00E+00	5.47E+00	0.00E+00	0.00E+00	5.47E+00	2.48E-03	2.88E-02
HNO_3	0.00E+00	0.00E+00	0.00E+00	0.00E+00	0.00E+00	0.00E+00	0.00E+00	0.00E+00	0.00E+00
K^+	0.00E+00	0.00E+00	0.00E+00	3.60E+01	0.00E+00	0.00E+00	3.60E+01	1.64E-02	1.89E-01
La^{+3}	0.00E+00	0.00E+00	0.00E+00	5.56E-03	0.00E+00	0.00E+00	5.56E-03	2.53E-06	2.92E-05
Li^+	0.00E+00	0.00E+00	0.00E+00	8.98E+00	0.00E+00	0.00E+00	8.98E+00	4.08E-03	4.72E-02
Mg^{+2}	0.00E+00	0.00E+00	0.00E+00	5.91E+00	0.00E+00	0.00E+00	5.91E+00	2.69E-03	3.11E-02
Mn^{+3}	0.00E+00	0.00E+00	0.00E+00	2.20E-01	0.00E+00	0.00E+00	2.20E-01	1.00E-04	1.16E-03
MnO_4^-	0.00E+00	0.00E+00	0.00E+00	0.00E+00	0.00E+00	0.00E+00	0.00E+00	0.00E+00	0.00E+00
N_2	0.00E+00	0.00E+00	0.00E+00	0.00E+00	4.12E-03	6.15E+04	6.15E+04	2.80E+01	3.24E+02
Na^+	0.00E+00	0.00E+00	0.00E+00	1.28E+02	0.00E+00	0.00E+00	1.28E+02	5.84E-02	6.76E-01
NH3	0.00E+00	0.00E+00	0.00E+00	0.00E+00	1.24E-06	1.12E+01	1.12E+01	5.09E-03	5.90E-02
NH4+	0.00E+00	0.00E+00	0.00E+00	1.44E-16	0.00E+00	0.00E+00	1.44E-16	6.55E-20	7.58E-19
Ni^{+2}	0.00E+00	0.00E+00	0.00E+00	2.00E-01	0.00E+00	0.00E+00	2.00E-01	9.10E-05	1.05E-03
NO	0.00E+00	0.00E+00	0.00E+00	0.00E+00	3.07E-04	4.91E+03	4.91E+03	2.23E+00	2.58E+01
NO_2	0.00E+00	0.00E+00	0.00E+00	0.00E+00	2.81E-05	6.87E+02	6.87E+02	3.12E-01	3.62E+00
NO_2^-	0.00E+00	0.00E+00	0.00E+00	0.00E+00	0.00E+00	0.00E+00	0.00E+00	0.00E+00	0.00E+00
NO_3^-	0.00E+00	0.00E+00	0.00E+00	0.00E+00	0.00E+00	0.00E+00	0.00E+00	0.00E+00	0.00E+00
O_2	0.00E+00	0.00E+00	0.00E+00	0.00E+00	1.50E-03	2.56E+04	2.56E+04	1.16E+01	1.35E+02
O^-	0.00E+00	0.00E+00	0.00E+00	3.92E+02	0.00E+00	0.00E+00	3.92E+02	1.78E-01	2.06E+00
OH^-	0.00E+00	0.00E+00	0.00E+00	0.00E+00	0.00E+00	0.00E+00	0.00E+00	0.00E+00	0.00E+00
OH(b)	0.00E+00	0.00E+00	0.00E+00	0.00E+00	0.00E+00	0.00E+00	0.00E+00	0.00E+00	0.00E+00
Pb^{+2}	0.00E+00	0.00E+00	0.00E+00	6.66E-02	0.00E+00	0.00E+00	6.66E-02	3.03E-05	3.50E-04
Pd^{+2}	0.00E+00	0.00E+00	0.00E+00	1.07E-03	0.00E+00	0.00E+00	1.07E-03	4.87E-07	5.64E-06
PO_4^{-3}	0.00E+00	0.00E+00	0.00E+00	5.62E+00	0.00E+00	0.00E+00	5.62E+00	2.55E-03	2.96E-02
Resin	0.00E+00	0.00E+00	0.00E+00	0.00E+00	0.00E+00	0.00E+00	0.00E+00	0.00E+00	0.00E+00
Rh^{+3}	0.00E+00	0.00E+00	0.00E+00	3.84E-03	0.00E+00	0.00E+00	3.84E-03	1.74E-06	2.02E-05
Ru^{+3}	0.00E+00	0.00E+00	0.00E+00	9.81E-02	0.00E+00	0.00E+00	9.81E-02	4.46E-05	5.16E-04
S^{+6}	0.00E+00	0.00E+00	0.00E+00	0.00E+00	0.00E+00	0.00E+00	0.00E+00	0.00E+00	0.00E+00
SiO2	0.00E+00	0.00E+00	0.00E+00	1.70E+02	0.00E+00	0.00E+00	1.70E+02	7.74E-02	8.95E-01
SiO_4^{-4}	0.00E+00	0.00E+00	0.00E+00	9.15E-14	0.00E+00	0.00E+00	9.15E-14	4.16E-17	4.81E-16
SO_2	0.00E+00	0.00E+00	0.00E+00	0.00E+00	5.20E-07	1.77E+01	1.77E+01	8.06E-03	9.33E-02
SO_4^{-2}	0.00E+00	0.00E+00	0.00E+00	0.00E+00	0.00E+00	0.00E+00	0.00E+00	0.00E+00	0.00E+00
Sr^{+2}	0.00E+00	0.00E+00	0.00E+00	9.26E-04	0.00E+00	0.00E+00	9.26E-04	4.21E-07	4.87E-06
Sucrose	0.00E+00	0.00E+00	0.00E+00	0.00E+00	0.00E+00	0.00E+00	0.00E+00	0.00E+00	0.00E+00
Ti^{+4}	0.00E+00	0.00E+00	0.00E+00	5.23E-01	0.00E+00	0.00E+00	5.23E-01	2.38E-04	2.75E-03
Zn^{+2}	0.00E+00	0.00E+00	0.00E+00	2.70E+01	0.00E+00	0.00E+00	2.70E+01	1.23E-02	1.42E-01
Zr^{+4}	0.00E+00	0.00E+00	0.00E+00	8.32E+00	0.00E+00	0.00E+00	8.32E+00	3.78E-03	4.38E-02

Components	Aqueous Comp			Solid Comp	Gaseous		Total Comp		
Unit	mol/L	Lb/gal	Lb/day	Lb/day	mol/L	Lb/day	Lb/day	Mt/day	g/sec
Total	0.00E+00	0.00E+00	0.00E+00	9.71E+02	0.00E+00	0.00E+00	9.71E+02	4.41E-01	5.11E+00
$C_2O_4^{-2}$	0.00E+00	0.00E+00	0.00E+00	9.71E+02	0.00E+00	0.00E+00	9.71E+02	4.41E-01	5.11E+00
Formate	0.00E+00	0.00E+00	0.00E+00	4.79E-11	0.00E+00	0.00E+00	4.79E-11	2.18E-14	2.52E-13
Acetate	0.00E+00	0.00E+00	0.00E+00	4.87E-11	0.00E+00	0.00E+00	4.87E-11	2.21E-14	2.56E-13
Glycolate	0.00E+00	0.00E+00	0.00E+00	4.12E-10	0.00E+00	0.00E+00	4.12E-10	1.87E-13	2.17E-12
IDA	0.00E+00	0.00E+00	0.00E+00	3.88E-10	0.00E+00	0.00E+00	3.88E-10	1.76E-13	2.04E-12
Citrate	0.00E+00	0.00E+00	0.00E+00	5.11E-11	0.00E+00	0.00E+00	5.11E-11	2.32E-14	2.69E-13
HEDTA	0.00E+00	0.00E+00	0.00E+00	3.47E-10	0.00E+00	0.00E+00	3.47E-10	1.58E-13	1.82E-12
EDTA	0.00E+00	0.00E+00	0.00E+00	4.38E-11	0.00E+00	0.00E+00	4.38E-11	1.99E-14	2.30E-13

Rad. Comp	Aqueous Rad. Comp			Solids Rad. Comp (1)			Total Rad. Comp (1)		
Unit	Ci/L	Ci/day	Lb/day	Ci/L	Ci/day	Lb/day	Ci/L	Ci/day	Lb/day
Total	0.00E+00	0.00E+00	0.00E+00	3.68E-07	8.90E+01	3.41E+00	3.68E-07	8.90E+01	3.41E+00
^{241}Am	0.00E+00	0.00E+00	0.00E+00	9.39E-10	2.27E-01	1.46E-04	9.39E-10	2.27E-01	1.46E-04
^{243}Am	0.00E+00	0.00E+00	0.00E+00	6.11E-13	1.48E-04	1.63E-06	6.11E-13	1.48E-04	1.63E-06
^{14}C	0.00E+00	0.00E+00	0.00E+00	1.51E-09	3.64E-01	1.80E-04	1.51E-09	3.64E-01	1.80E-04
^{60}Co	0.00E+00	0.00E+00	0.00E+00	4.99E-11	1.21E-02	2.35E-08	4.99E-11	1.21E-02	2.35E-08
^{243}Cm	0.00E+00	0.00E+00	0.00E+00	4.28E-14	1.03E-05	4.51E-10	4.28E-14	1.03E-05	4.51E-10
^{244}Cm	0.00E+00	0.00E+00	0.00E+00	1.01E-12	2.44E-04	6.65E-09	1.01E-12	2.44E-04	6.65E-09
^{137}Cs	0.00E+00	0.00E+00	0.00E+00	2.47E-08	5.96E+00	1.51E-04	2.47E-08	5.96E+00	1.51E-04
^{152}Eu	0.00E+00	0.00E+00	0.00E+00	2.80E-12	6.77E-04	8.58E-09	2.80E-12	6.77E-04	8.58E-09
^{154}Eu	0.00E+00	0.00E+00	0.00E+00	5.80E-10	1.40E-01	1.14E-06	5.80E-10	1.40E-01	1.14E-06
^{155}Eu	0.00E+00	0.00E+00	0.00E+00	1.67E-10	4.04E-02	1.84E-07	1.67E-10	4.04E-02	1.84E-07
^{3}H	0.00E+00	0.00E+00	0.00E+00	1.62E-09	3.92E-01	8.99E-08	1.62E-09	3.92E-01	8.99E-08
^{129}I	0.00E+00	0.00E+00	0.00E+00	4.91E-11	1.19E-02	1.48E-01	4.91E-11	1.19E-02	1.48E-01
^{63}Ni	0.00E+00	0.00E+00	0.00E+00	2.03E-09	4.89E-01	1.90E-05	2.03E-09	4.89E-01	1.90E-05
^{237}Np	0.00E+00	0.00E+00	0.00E+00	2.95E-13	7.12E-05	2.23E-04	2.95E-13	7.12E-05	2.23E-04
^{238}Pu	0.00E+00	0.00E+00	0.00E+00	1.67E-12	4.03E-04	5.19E-08	1.67E-12	4.03E-04	5.19E-08
^{239}Pu	0.00E+00	0.00E+00	0.00E+00	2.30E-11	5.56E-03	1.98E-04	2.30E-11	5.56E-03	1.98E-04
^{240}Pu	0.00E+00	0.00E+00	0.00E+00	5.97E-12	1.44E-03	1.40E-05	5.97E-12	1.44E-03	1.40E-05
^{241}Pu	0.00E+00	0.00E+00	0.00E+00	1.25E-10	3.03E-02	6.48E-07	1.25E-10	3.03E-02	6.48E-07
^{242}Pu	0.00E+00	0.00E+00	0.00E+00	6.31E-16	1.52E-07	8.54E-08	6.31E-16	1.52E-07	8.54E-08
^{125}Sb	0.00E+00	0.00E+00	0.00E+00	8.71E-10	2.10E-01	4.47E-07	8.71E-10	2.10E-01	4.47E-07
^{151}Sm	0.00E+00	0.00E+00	0.00E+00	7.06E-10	1.70E-01	1.43E-05	7.06E-10	1.70E-01	1.43E-05
^{126}Sn	0.00E+00	0.00E+00	0.00E+00	5.49E-12	1.33E-03	2.57E-04	5.49E-12	1.33E-03	2.57E-04
^{90}Sr	0.00E+00	0.00E+00	0.00E+00	2.41E-07	5.82E+01	9.29E-04	2.41E-07	5.82E+01	9.29E-04
^{99}Tc	0.00E+00	0.00E+00	0.00E+00	9.41E-08	2.27E+01	2.96E+00	9.41E-08	2.27E+01	2.96E+00
^{232}Th	0.00E+00	0.00E+00	0.00E+00	8.83E-15	2.13E-06	4.27E-02	8.83E-15	2.13E-06	4.27E-02
^{233}U	0.00E+00	0.00E+00	0.00E+00	3.01E-13	7.28E-05	1.67E-05	3.01E-13	7.28E-05	1.67E-05
^{234}U	0.00E+00	0.00E+00	0.00E+00	2.11E-13	5.10E-05	1.81E-05	2.11E-13	5.10E-05	1.81E-05
^{235}U	0.00E+00	0.00E+00	0.00E+00	8.31E-15	2.01E-06	2.05E-03	8.31E-15	2.01E-06	2.05E-03
^{236}U	0.00E+00	0.00E+00	0.00E+00	1.42E-14	3.44E-06	1.17E-04	1.42E-14	3.44E-06	1.17E-04
^{238}U	0.00E+00	0.00E+00	0.00E+00	1.65E-13	3.98E-05	2.61E-01	1.65E-13	3.98E-05	2.61E-01

(1) All radionuclides in gaseous streams are assumed to exist as solid particulate.

CAS Comp	Organic Components				
Unit	mol/L	Lb/gal	Lb/day	Mt/day	g/sec
Total	8.70E-06	7.16E-06	4.57E+02	2.08E-01	2.40E+00
50-32-8	3.34E-08	7.02E-08	4.48E+00	2.04E-03	2.36E-02
56-23-5	0.00E+00	0.00E+00	0.00E+00	0.00E+00	0.00E+00
57-14-7	4.40E-10	2.21E-10	1.41E-02	6.40E-06	7.41E-05
58-90-2	2.47E-10	4.77E-10	3.05E-02	1.38E-05	1.60E-04
59-89-2	4.78E-17	4.63E-17	2.95E-09	1.34E-12	1.55E-11
60-35-5	3.58E-08	1.77E-08	1.13E+00	5.12E-04	5.93E-03
62-75-9	1.44E-08	8.92E-09	5.69E-01	2.59E-04	3.00E-03
64-19-7	3.33E-14	1.67E-14	1.06E-06	4.84E-10	5.60E-09
71-43-2	0.00E+00	0.00E+00	0.00E+00	0.00E+00	0.00E+00
75-05-8	7.57E-12	2.59E-12	1.65E-04	7.52E-08	8.70E-07
75-12-7	2.89E-07	1.09E-07	6.93E+00	3.15E-03	3.65E-02
76-15-3	0.00E+00	0.00E+00	0.00E+00	0.00E+00	0.00E+00
79-01-6	0.00E+00	0.00E+00	0.00E+00	0.00E+00	0.00E+00
83-32-9	5.68E-18	7.31E-18	4.66E-10	2.12E-13	2.45E-12
84-66-2	1.80E-08	3.34E-08	2.13E+00	9.69E-04	1.12E-02
84-74-2	5.85E-09	1.36E-08	8.68E-01	3.94E-04	4.56E-03
87-68-3	0.00E+00	0.00E+00	0.00E+00	0.00E+00	0.00E+00
88-89-1	5.71E-08	1.09E-07	6.97E+00	3.17E-03	3.67E-02
91-20-3	9.18E-18	9.82E-18	6.26E-10	2.85E-13	3.29E-12
95-50-1	0.00E+00	0.00E+00	0.00E+00	0.00E+00	0.00E+00
98-86-2	2.22E-10	2.23E-10	1.42E-02	6.48E-06	7.50E-05
100-21-0	8.90E-07	1.23E-06	7.87E+01	3.58E-02	4.14E-01
101-84-8	5.70E-19	8.09E-19	5.16E-11	2.35E-14	2.72E-13
106-93-4	8.40E-19	1.32E-18	8.40E-11	3.82E-14	4.42E-13
106-97-8	0.00E+00	0.00E+00	0.00E+00	0.00E+00	0.00E+00
106-99-0	0.00E+00	0.00E+00	0.00E+00	0.00E+00	0.00E+00
108-87-2	0.00E+00	0.00E+00	0.00E+00	0.00E+00	0.00E+00
108-88-3	0.00E+00	0.00E+00	0.00E+00	0.00E+00	0.00E+00
108-95-2	6.77E-08	5.32E-08	3.39E+00	1.54E-03	1.78E-02
110-54-3	0.00E+00	0.00E+00	0.00E+00	0.00E+00	0.00E+00
110-82-7	0.00E+00	0.00E+00	0.00E+00	0.00E+00	0.00E+00
111-84-2	0.00E+00	0.00E+00	0.00E+00	0.00E+00	0.00E+00
120-12-7	2.38E-12	3.54E-12	2.26E-04	1.03E-07	1.19E-06
120-82-1	4.00E-25	6.05E-25	3.86E-17	1.76E-20	2.03E-19
122-39-4	9.00E-10	1.27E-09	8.11E-02	3.68E-05	4.26E-04
126-73-8	2.42E-08	5.38E-08	3.43E+00	1.56E-03	1.81E-02
127-18-4	0.00E+00	0.00E+00	0.00E+00	0.00E+00	0.00E+00
129-00-0	1.87E-10	3.16E-10	2.02E-02	9.18E-06	1.06E-04
132-64-9	1.12E-14	1.57E-14	9.98E-07	4.54E-10	5.25E-09
144-62-7	7.26E-06	5.46E-06	3.48E+02	1.58E-01	1.83E+00
193-39-5	7.64E-16	1.76E-15	1.12E-07	5.11E-11	5.91E-10
206-44-0	2.25E-17	3.79E-17	2.42E-09	1.10E-12	1.27E-11
208-96-8	2.03E-13	2.58E-13	1.64E-05	7.46E-09	8.65E-08
603-34-9	6.48E-10	1.33E-09	8.47E-02	3.85E-05	4.46E-04
621-64-7	3.75E-17	4.08E-17	2.60E-09	1.18E-12	1.37E-11
1321-64-8	3.27E-18	8.21E-18	5.24E-10	2.38E-13	2.76E-12
1336-36-3	6.52E-17	1.75E-16	1.12E-08	5.08E-12	5.88E-11
3697-24-3	2.01E-17	4.07E-17	2.60E-09	1.18E-12	1.37E-11
4170-30-3	1.11E-10	6.51E-11	4.15E-03	1.89E-06	2.19E-05
10061-01-5	5.00E-26	4.63E-26	2.95E-18	1.34E-21	1.55E-20
26140-60-3	1.33E-17	2.56E-17	1.63E-09	7.41E-13	8.58E-12

Stream Number: HMP06
Stream Name: Melter offgas (primary)
Configuration: MRQ-05-0049.acmf
Run Date / Time: 12/14/2005 - 1:42:25 PM
Run Data File: H:\ACM v3.1\MRQ-05-0049\MRQ_05_0049A_Streams.csv

Stream Properties Variable	Value	Units	
Density	4.13E-04	g/cm³	(does not include solid phase)
Enthalpy	-4.44E+06	BTU/hr	
Mass Flow	2.21E+03	Lb/hr	
	5.31E+04	Lb/day	
Volumetric Flow	1.06E+04	GPM	(does not include solid phase)
	1.42E+03	ft³/min	(does not include solid phase)
Molar Flow	9.24E+01	Lbmol/hr	
Molecular Weight	2.36E+01	Lb/Lbmol	
Pressure	9.76E+02	mbar	
Temperature	4.00E+02	C	
Na Molarity	0.00E+00	mol/L	
pH	0.00E+00	pH	
Total TRU	3.25E-07	Ci/L	
Total Activity	1.07E-04	Ci/L	

Component	Aqueous Comp			Solid Comp	Gaseous (1)		Total Comp		
Unit	mol/L	Lb/gal	Lb/day	Lb/day	mol/L	Lb/day	Lb/day	mt/day	g/sec
Total	0.00E+00	0.00E+00	0.00E+00	1.33E+02	1.74E-02	5.25E+04	5.26E+04	2.39E+01	2.77E+02
Ag^+	0.00E+00	0.00E+00	0.00E+00	1.21E-01	0.00E+00	0.00E+00	1.21E-01	5.50E-05	6.37E-04
Al^{+3}	0.00E+00	0.00E+00	0.00E+00	6.36E+00	0.00E+00	0.00E+00	6.36E+00	2.89E-03	3.34E-02
As^{+3}	0.00E+00	0.00E+00	0.00E+00	1.28E-02	0.00E+00	0.00E+00	1.28E-02	5.80E-06	6.72E-05
B^{+3}	0.00E+00	0.00E+00	0.00E+00	1.13E+01	0.00E+00	0.00E+00	1.13E+01	5.13E-03	5.93E-02
Ba^{+2}	0.00E+00	0.00E+00	0.00E+00	3.24E-02	0.00E+00	0.00E+00	3.24E-02	1.47E-05	1.71E-04
Bi^{+3}	0.00E+00	0.00E+00	0.00E+00	2.92E-01	0.00E+00	0.00E+00	2.92E-01	1.33E-04	1.54E-03
Ca^{+2}	0.00E+00	0.00E+00	0.00E+00	2.67E-01	0.00E+00	0.00E+00	2.67E-01	1.21E-04	1.40E-03
Cd^{+2}	0.00E+00	0.00E+00	0.00E+00	1.31E+00	0.00E+00	0.00E+00	1.31E+00	5.94E-04	6.88E-03
Ce^{+3}	0.00E+00	0.00E+00	0.00E+00	2.32E-02	0.00E+00	0.00E+00	2.32E-02	1.05E-05	1.22E-04
Cl^-	0.00E+00	0.00E+00	0.00E+00	0.00E+00	0.00E+00	0.00E+00	0.00E+00	0.00E+00	0.00E+00
CO	0.00E+00	0.00E+00	0.00E+00	0.00E+00	1.59E-06	5.65E+00	5.65E+00	2.57E-03	2.97E-02
CO_2	0.00E+00	0.00E+00	0.00E+00	0.00E+00	1.59E-04	8.88E+02	8.88E+02	4.03E-01	4.67E+00
CO_3^{-2}	0.00E+00	0.00E+00	0.00E+00	0.00E+00	0.00E+00	0.00E+00	0.00E+00	0.00E+00	0.00E+00
Cr^{+3}	0.00E+00	0.00E+00	0.00E+00	1.17E-01	0.00E+00	0.00E+00	1.17E-01	5.32E-05	6.16E-04
Cu^{+2}	0.00E+00	0.00E+00	0.00E+00	8.13E-03	0.00E+00	0.00E+00	8.13E-03	3.69E-06	4.27E-05
F^-	0.00E+00	0.00E+00	0.00E+00	0.00E+00	0.00E+00	0.00E+00	0.00E+00	0.00E+00	0.00E+00
Fe^{+3}	0.00E+00	0.00E+00	0.00E+00	4.83E+00	0.00E+00	0.00E+00	4.83E+00	2.20E-03	2.54E-02
H_2O	0.00E+00	0.00E+00	0.00E+00	0.00E+00	8.70E-03	1.99E+04	1.99E+04	9.07E+00	1.05E+02
$H_2O(b)$	0.00E+00	0.00E+00	0.00E+00	0.00E+00	0.00E+00	0.00E+00	0.00E+00	0.00E+00	0.00E+00
H^+	0.00E+00	0.00E+00	0.00E+00	0.00E+00	0.00E+00	0.00E+00	0.00E+00	0.00E+00	0.00E+00
HCL	0.00E+00	0.00E+00	0.00E+00	0.00E+00	1.39E-06	6.43E+00	6.43E+00	2.92E-03	3.38E-02
HCO3-	0.00E+00	0.00E+00	0.00E+00	7.99E-21	0.00E+00	0.00E+00	7.99E-21	3.63E-24	4.21E-23
H2CO3	0.00E+00	0.00E+00	0.00E+00	0.00E+00	0.00E+00	0.00E+00	0.00E+00	0.00E+00	0.00E+00
HF	0.00E+00	0.00E+00	0.00E+00	0.00E+00	7.57E-06	1.93E+01	1.93E+01	8.76E-03	1.01E-01
Hg^{+2}	0.00E+00	0.00E+00	0.00E+00	7.49E+00	0.00E+00	0.00E+00	7.49E+00	3.41E-03	3.94E-02
HNO_3	0.00E+00	0.00E+00	0.00E+00	0.00E+00	0.00E+00	0.00E+00	0.00E+00	0.00E+00	0.00E+00
K^+	0.00E+00	0.00E+00	0.00E+00	1.61E+00	0.00E+00	0.00E+00	1.61E+00	7.31E-04	8.47E-03
La^{+3}	0.00E+00	0.00E+00	0.00E+00	1.21E-01	0.00E+00	0.00E+00	1.21E-01	5.51E-05	6.38E-04
Li^+	0.00E+00	0.00E+00	0.00E+00	1.40E+00	0.00E+00	0.00E+00	1.40E+00	6.38E-04	7.38E-03
Mg^{+2}	0.00E+00	0.00E+00	0.00E+00	7.81E-02	0.00E+00	0.00E+00	7.81E-02	3.55E-05	4.11E-04
Mn^{+3}	0.00E+00	0.00E+00	0.00E+00	6.33E-01	0.00E+00	0.00E+00	6.33E-01	2.88E-04	3.33E-03
MnO_4^-	0.00E+00	0.00E+00	0.00E+00	0.00E+00	0.00E+00	0.00E+00	0.00E+00	0.00E+00	0.00E+00
N_2	0.00E+00	0.00E+00	0.00E+00	0.00E+00	6.45E-03	2.30E+04	2.30E+04	1.05E+01	1.21E+02
Na^+	0.00E+00	0.00E+00	0.00E+00	1.26E+01	0.00E+00	0.00E+00	1.26E+01	5.72E-03	6.62E-02
NH3	0.00E+00	0.00E+00	0.00E+00	0.00E+00	1.16E-06	2.51E+00	2.51E+00	1.14E-03	1.32E-02
NH4+	0.00E+00	0.00E+00	0.00E+00	1.23E-17	0.00E+00	0.00E+00	1.23E-17	5.58E-21	6.46E-20
Ni^{+2}	0.00E+00	0.00E+00	0.00E+00	2.39E-01	0.00E+00	0.00E+00	2.39E-01	1.08E-04	1.26E-03
NO	0.00E+00	0.00E+00	0.00E+00	0.00E+00	1.04E-04	3.96E+02	3.96E+02	1.80E-01	2.08E+00
NO_2	0.00E+00	0.00E+00	0.00E+00	0.00E+00	9.70E-06	5.68E+01	5.68E+01	2.58E-02	2.99E-01
NO_2^-	0.00E+00	0.00E+00	0.00E+00	0.00E+00	0.00E+00	0.00E+00	0.00E+00	0.00E+00	0.00E+00
NO_3^-	0.00E+00	0.00E+00	0.00E+00	0.00E+00	0.00E+00	0.00E+00	0.00E+00	0.00E+00	0.00E+00
O_2	0.00E+00	0.00E+00	0.00E+00	0.00E+00	2.00E-03	8.14E+03	8.14E+03	3.70E+00	4.28E+01
O^-	0.00E+00	0.00E+00	0.00E+00	4.98E+01	0.00E+00	0.00E+00	4.98E+01	2.27E-02	2.62E-01
OH^-	0.00E+00	0.00E+00	0.00E+00	0.00E+00	0.00E+00	0.00E+00	0.00E+00	0.00E+00	0.00E+00
$OH(b)^-$	0.00E+00	0.00E+00	0.00E+00	0.00E+00	0.00E+00	0.00E+00	0.00E+00	0.00E+00	0.00E+00
Pb^{+2}	0.00E+00	0.00E+00	0.00E+00	3.48E-01	0.00E+00	0.00E+00	3.48E-01	1.58E-04	1.83E-03
Pd^{+2}	0.00E+00	0.00E+00	0.00E+00	5.71E-03	0.00E+00	0.00E+00	5.71E-03	2.60E-06	3.01E-05
PO_4^{-3}	0.00E+00	0.00E+00	0.00E+00	3.24E+00	0.00E+00	0.00E+00	3.24E+00	1.47E-03	1.71E-02
Resin	0.00E+00	0.00E+00	0.00E+00	0.00E+00	0.00E+00	0.00E+00	0.00E+00	0.00E+00	0.00E+00
Rh^{+3}	0.00E+00	0.00E+00	0.00E+00	1.01E-02	0.00E+00	0.00E+00	1.01E-02	4.58E-06	5.30E-05
Ru^{+3}	0.00E+00	0.00E+00	0.00E+00	8.66E-01	0.00E+00	0.00E+00	8.66E-01	3.94E-04	4.56E-03
S^{+6}	0.00E+00	0.00E+00	0.00E+00	0.00E+00	0.00E+00	0.00E+00	0.00E+00	0.00E+00	0.00E+00
SiO2	0.00E+00	0.00E+00	0.00E+00	2.74E+01	0.00E+00	0.00E+00	2.74E+01	1.24E-02	1.44E-01
SiO_4^{-4}	0.00E+00	0.00E+00	0.00E+00	9.04E-09	0.00E+00	0.00E+00	9.04E-09	4.11E-12	4.76E-11
SO_2	0.00E+00	0.00E+00	0.00E+00	0.00E+00	1.76E-06	1.43E+01	1.43E+01	6.52E-03	7.54E-02
SO_4^{-2}	0.00E+00	0.00E+00	0.00E+00	0.00E+00	0.00E+00	0.00E+00	0.00E+00	0.00E+00	0.00E+00
Sr^{+2}	0.00E+00	0.00E+00	0.00E+00	1.81E-02	0.00E+00	0.00E+00	1.81E-02	8.21E-06	9.51E-05
Sucrose	0.00E+00	0.00E+00	0.00E+00	0.00E+00	0.00E+00	0.00E+00	0.00E+00	0.00E+00	0.00E+00
Ti^{+4}	0.00E+00	0.00E+00	0.00E+00	1.65E-03	0.00E+00	0.00E+00	1.65E-03	7.51E-07	8.69E-06
Zn^{+2}	0.00E+00	0.00E+00	0.00E+00	1.53E+00	0.00E+00	0.00E+00	1.53E+00	6.97E-04	8.07E-03
Zr^{+4}	0.00E+00	0.00E+00	0.00E+00	7.68E-01	0.00E+00	0.00E+00	7.68E-01	3.49E-04	4.04E-03

Components	Aqueous Comp			Solid Comp	Gaseous		Total Comp		
Unit	mol/L	Lb/gal	Lb/day	Lb/day	mol/L	Lb/day	Lb/day	Mt/day	g/sec
Total	0.00E+00	0.00E+00	0.00E+00	4.79E+02	0.00E+00	0.00E+00	4.79E+02	2.18E-01	2.52E+00
$C_2O_4^{-2}$	0.00E+00	0.00E+00	0.00E+00	4.79E+02	0.00E+00	0.00E+00	4.79E+02	2.18E-01	2.52E+00
Formate	0.00E+00	0.00E+00	0.00E+00	9.17E-08	0.00E+00	0.00E+00	9.17E-08	4.17E-11	4.82E-10
Acetate	0.00E+00	0.00E+00	0.00E+00	9.32E-08	0.00E+00	0.00E+00	9.32E-08	4.23E-11	4.90E-10
Glycolate	0.00E+00	0.00E+00	0.00E+00	4.58E-08	0.00E+00	0.00E+00	4.58E-08	2.08E-11	2.41E-10
IDA	0.00E+00	0.00E+00	0.00E+00	1.17E-07	0.00E+00	0.00E+00	1.17E-07	5.31E-11	6.15E-10
Citrate	0.00E+00	0.00E+00	0.00E+00	1.00E-07	0.00E+00	0.00E+00	1.00E-07	4.56E-11	5.28E-10
HEDTA	0.00E+00	0.00E+00	0.00E+00	8.22E-08	0.00E+00	0.00E+00	8.22E-08	3.74E-11	4.33E-10
EDTA	0.00E+00	0.00E+00	0.00E+00	8.84E-08	0.00E+00	0.00E+00	8.84E-08	4.02E-11	4.65E-10

Rad. Comp	Aqueous Rad. Comp			Solids Rad. Comp (1)			Total Rad. Comp (1)		
Unit	Ci/L	Ci/day	Lb/day	Ci/L	Ci/day	Lb/day	Ci/L	Ci/day	Lb/day
Total	0.00E+00	0.00E+00	0.00E+00	1.07E-04	6.18E+03	2.12E+01	1.07E-04	6.18E+03	2.12E+01
^{241}Am	0.00E+00	0.00E+00	0.00E+00	2.57E-07	1.48E+01	9.55E-03	2.57E-07	1.48E+01	9.55E-03
^{243}Am	0.00E+00	0.00E+00	0.00E+00	2.09E-11	1.20E-03	1.33E-05	2.09E-11	1.20E-03	1.33E-05
^{14}C	0.00E+00	0.00E+00	0.00E+00	1.22E-09	7.01E-02	3.46E-05	1.22E-09	7.01E-02	3.46E-05
^{60}Co	0.00E+00	0.00E+00	0.00E+00	2.29E-08	1.32E+00	2.58E-06	2.29E-08	1.32E+00	2.58E-06
^{243}Cm	0.00E+00	0.00E+00	0.00E+00	2.90E-10	1.67E-02	7.29E-07	2.90E-10	1.67E-02	7.29E-07
^{244}Cm	0.00E+00	0.00E+00	0.00E+00	6.58E-09	3.80E-01	1.04E-05	6.58E-09	3.80E-01	1.04E-05
^{137}Cs	0.00E+00	0.00E+00	0.00E+00	8.84E-05	5.10E+03	1.30E-01	8.84E-05	5.10E+03	1.30E-01
^{152}Eu	0.00E+00	0.00E+00	0.00E+00	1.10E-09	6.36E-02	8.07E-07	1.10E-09	6.36E-02	8.07E-07
^{154}Eu	0.00E+00	0.00E+00	0.00E+00	1.20E-07	6.90E+00	5.63E-05	1.20E-07	6.90E+00	5.63E-05
^{155}Eu	0.00E+00	0.00E+00	0.00E+00	1.77E-08	1.02E+00	4.64E-06	1.77E-08	1.02E+00	4.64E-06
^{3}H	0.00E+00	0.00E+00	0.00E+00	2.96E-08	1.71E+00	3.91E-07	2.96E-08	1.71E+00	3.91E-07
^{129}I	0.00E+00	0.00E+00	0.00E+00	5.18E-11	2.99E-03	3.73E-02	5.18E-11	2.99E-03	3.73E-02
^{63}Ni	0.00E+00	0.00E+00	0.00E+00	3.42E-09	1.98E-01	7.66E-06	3.42E-09	1.98E-01	7.66E-06
^{237}Np	0.00E+00	0.00E+00	0.00E+00	1.70E-10	9.79E-03	3.06E-02	1.70E-10	9.79E-03	3.06E-02
^{239}Pu	0.00E+00	0.00E+00	0.00E+00	8.05E-10	4.65E-02	5.98E-06	8.05E-10	4.65E-02	5.98E-06
^{238}Pu	0.00E+00	0.00E+00	0.00E+00	7.13E-09	4.12E-01	1.46E-02	7.13E-09	4.12E-01	1.46E-02
^{240}Pu	0.00E+00	0.00E+00	0.00E+00	1.88E-09	1.09E-01	1.06E-03	1.88E-09	1.09E-01	1.06E-03
^{241}Pu	0.00E+00	0.00E+00	0.00E+00	5.05E-08	2.92E+00	6.24E-05	5.05E-08	2.92E+00	6.24E-05
^{242}Pu	0.00E+00	0.00E+00	0.00E+00	1.73E-13	1.00E-05	5.60E-06	1.73E-13	1.00E-05	5.60E-06
^{125}Sb	0.00E+00	0.00E+00	0.00E+00	5.28E-08	3.05E+00	6.47E-06	5.28E-08	3.05E+00	6.47E-06
^{151}Sm	0.00E+00	0.00E+00	0.00E+00	4.92E-07	2.84E+01	2.38E-03	4.92E-07	2.84E+01	2.38E-03
^{126}Sn	0.00E+00	0.00E+00	0.00E+00	2.07E-10	1.19E-02	2.32E-03	2.07E-10	1.19E-02	2.32E-03
^{90}Sr	0.00E+00	0.00E+00	0.00E+00	1.64E-05	9.44E+02	1.51E-02	1.64E-05	9.44E+02	1.51E-02
^{99}Tc	0.00E+00	0.00E+00	0.00E+00	1.23E-06	7.12E+01	9.26E+00	1.23E-06	7.12E+01	9.26E+00
^{232}Th	0.00E+00	0.00E+00	0.00E+00	5.61E-12	3.24E-04	6.49E+00	5.61E-12	3.24E-04	6.49E+00
^{233}U	0.00E+00	0.00E+00	0.00E+00	4.59E-10	2.65E-02	6.06E-03	4.59E-10	2.65E-02	6.06E-03
^{234}U	0.00E+00	0.00E+00	0.00E+00	2.39E-11	1.38E-03	4.91E-04	2.39E-11	1.38E-03	4.91E-04
^{235}U	0.00E+00	0.00E+00	0.00E+00	5.76E-13	3.32E-05	3.39E-02	5.76E-13	3.32E-05	3.39E-02
^{236}U	0.00E+00	0.00E+00	0.00E+00	7.93E-13	4.57E-05	1.56E-03	7.93E-13	4.57E-05	1.56E-03
^{238}U	0.00E+00	0.00E+00	0.00E+00	1.36E-11	7.82E-04	5.13E+00	1.36E-11	7.82E-04	5.13E+00

(1) All radionuclides in gaseous streams are assumed to exist as solid particulate.

CAS Comp	Organic Components				
Unit	mol/L	Lb/gal	Lb/day	Mt/day	g/sec
Total	1.99E-06	1.54E-06	2.34E+01	1.07E-02	1.23E-01
50-32-8	9.41E-09	1.98E-08	3.02E-01	1.37E-04	1.59E-03
56-23-5	6.24E-29	8.01E-29	1.22E-21	5.55E-25	6.42E-24
57-14-7	6.36E-10	3.19E-10	4.86E-03	2.21E-06	2.56E-05
58-90-2	3.23E-10	6.25E-10	9.52E-03	4.33E-06	5.01E-05
59-89-2	9.53E-17	9.24E-17	1.41E-09	6.40E-13	7.41E-12
60-35-5	9.14E-09	4.51E-09	6.87E-02	3.12E-05	3.61E-04
62-75-9	1.17E-08	7.27E-09	1.11E-01	5.03E-05	5.83E-04
64-19-7	6.65E-14	3.33E-14	5.08E-07	2.31E-10	2.67E-09
71-43-2	2.84E-22	1.85E-22	2.82E-15	1.28E-18	1.48E-17
75-05-8	1.58E-11	5.35E-12	8.16E-05	3.71E-08	4.29E-07
75-12-7	7.17E-08	2.69E-08	4.11E-01	1.87E-04	2.16E-03
76-15-3	0.00E+00	0.00E+00	0.00E+00	0.00E+00	0.00E+00
79-01-6	8.12E-24	8.90E-24	1.36E-16	6.17E-20	7.14E-19
83-32-9	7.11E-17	9.16E-17	1.40E-09	6.34E-13	7.34E-12
84-66-2	1.05E-08	1.95E-08	2.97E-01	1.35E-04	1.56E-03
84-74-2	3.71E-09	8.63E-09	1.31E-01	5.98E-05	6.92E-04
87-68-3	2.84E-24	6.19E-24	9.44E-17	4.29E-20	4.96E-19
88-89-1	1.41E-08	2.70E-08	4.11E-01	1.87E-04	2.16E-03
91-20-3	1.51E-16	1.61E-16	2.45E-09	1.12E-12	1.29E-11
95-50-1	4.97E-18	6.10E-18	9.29E-11	4.22E-14	4.89E-13
98-86-2	3.04E-10	3.06E-10	4.66E-03	2.12E-06	2.45E-05
100-21-0	2.05E-08	2.84E-08	4.33E-01	1.97E-04	2.28E-03
101-84-8	1.07E-17	1.53E-17	2.33E-10	1.06E-13	1.22E-12
106-93-4	2.86E-17	4.49E-17	6.84E-10	3.11E-13	3.60E-12
106-97-8	0.00E+00	0.00E+00	0.00E+00	0.00E+00	0.00E+00
106-99-0	0.00E+00	0.00E+00	0.00E+00	0.00E+00	0.00E+00
108-87-2	0.00E+00	0.00E+00	0.00E+00	0.00E+00	0.00E+00
108-88-3	7.01E-23	5.39E-23	8.22E-16	3.74E-19	4.32E-18
108-95-2	3.10E-08	2.44E-08	3.71E-01	1.69E-04	1.95E-03
110-54-3	0.00E+00	0.00E+00	0.00E+00	0.00E+00	0.00E+00
110-82-7	0.00E+00	0.00E+00	0.00E+00	0.00E+00	0.00E+00
111-84-2	0.00E+00	0.00E+00	0.00E+00	0.00E+00	0.00E+00
120-12-7	6.09E-12	9.06E-12	1.38E-04	6.28E-08	7.26E-07
120-82-1	1.39E-18	2.11E-18	3.21E-11	1.46E-14	1.69E-13
122-39-4	7.67E-10	1.08E-09	1.65E-02	7.50E-06	8.68E-05
126-73-8	8.48E-09	1.89E-08	2.87E-01	1.31E-04	1.51E-03
127-18-4	1.07E-28	1.49E-28	2.27E-21	1.03E-24	1.19E-23
129-00-0	2.56E-10	4.31E-10	6.58E-03	2.99E-06	3.46E-05
132-64-9	7.40E-14	1.04E-13	1.58E-06	7.20E-10	8.33E-09
144-62-7	1.79E-06	1.35E-06	2.05E+01	9.34E-03	1.08E-01
193-39-5	1.53E-15	3.54E-15	5.40E-08	2.45E-11	2.84E-10
206-44-0	5.46E-17	9.21E-17	1.40E-09	6.38E-13	7.39E-12
208-96-8	8.00E-13	1.02E-12	1.55E-05	7.04E-09	8.15E-08
603-34-9	7.38E-10	1.51E-09	2.30E-02	1.05E-05	1.21E-04
621-64-7	8.48E-17	9.21E-17	1.40E-09	6.38E-13	7.39E-12
1321-64-8	3.66E-17	9.17E-17	1.40E-09	6.35E-13	7.35E-12
1336-36-3	9.75E-16	2.62E-15	3.99E-08	1.82E-11	2.10E-10
3697-24-3	4.56E-17	9.22E-17	1.41E-09	6.39E-13	7.40E-12
4170-30-3	1.50E-10	8.75E-11	1.33E-03	6.06E-07	7.02E-06
10061-01-5	2.04E-20	1.89E-20	2.87E-13	1.31E-16	1.51E-15
26140-60-3	4.79E-17	9.20E-17	1.40E-09	6.37E-13	7.38E-12

Stream Number:	PJV32
Stream Name:	HLW pulse ventilation header offgas
Configuration:	MRQ-05-0049.acmf
Run Date / Time:	12/14/2005 - 1:42:25 PM
Run Data File:	H:\ACM v3.1\MRQ-05-0049\MRQ_05_0049A_Streams.csv

Stream Properties			
Variable	Value	Units	
Density	1.03E-03	g/cm^3	(does not include solid phase)
Enthalpy	-7.39E+05	BTU/hr	
Mass Flow	2.11E+04	Lb/hr	
	5.06E+05	Lb/day	
Volumetric Flow	4.08E+04	GPM	(does not include solid phase)
	5.45E+03	ft^3/min	(does not include solid phase)
Molar Flow	7.34E+02	Lbmol/hr	
Molecular Weight	2.87E+01	Lb/Lbmol	
Pressure	8.91E+02	mbar	
Temperature	2.52E+01	C	
Na Molarity	0.00E+00	mol/L	
pH	2.24E+00	pH	
Total TRU	5.30E-14	Ci/L	
Total Activity	1.76E-11	Ci/L	

Component	Aqueous Comp			Solid Comp	Gaseous (1)		Total Comp		
Unit	mol/L	Lb/gal	Lb/day	Lb/day	mol/L	Lb/day	Lb/day	mt/day	g/sec
Total	2.94E-09	4.43E-10	2.60E-02	6.92E-05	3.59E-02	5.06E+05	5.06E+05	2.30E+02	2.66E+03
Ag^+	2.76E-23	2.49E-23	1.46E-15	7.67E-08	0.00E+00	0.00E+00	7.67E-08	3.49E-11	4.04E-10
Al^{+3}	3.34E-19	7.52E-20	4.42E-12	4.00E-06	0.00E+00	0.00E+00	4.00E-06	1.82E-09	2.10E-08
As^{+3}	1.22E-22	7.61E-23	4.47E-15	8.05E-09	0.00E+00	0.00E+00	8.05E-09	3.66E-12	4.24E-11
B^{+3}	1.87E-19	1.69E-20	9.91E-13	7.10E-06	0.00E+00	0.00E+00	7.10E-06	3.23E-09	3.73E-08
Ba^{+2}	2.54E-23	2.91E-23	1.71E-15	2.04E-08	0.00E+00	0.00E+00	2.04E-08	9.28E-12	1.07E-10
Bi^{+3}	2.99E-23	5.21E-23	3.06E-15	1.85E-07	0.00E+00	0.00E+00	1.85E-07	8.41E-11	9.73E-10
Ca^{+2}	6.08E-15	2.03E-15	1.19E-07	4.83E-08	0.00E+00	0.00E+00	1.68E-07	7.63E-11	8.83E-10
Cd^{+2}	4.71E-23	4.42E-23	2.59E-15	8.30E-07	0.00E+00	0.00E+00	8.30E-07	3.77E-10	4.37E-09
Ce^{+3}	6.78E-14	7.93E-14	4.66E-06	1.46E-08	0.00E+00	0.00E+00	4.67E-06	2.12E-09	2.46E-08
Cl^-	8.32E-14	2.46E-14	1.45E-06	3.73E-15	0.00E+00	0.00E+00	1.45E-06	6.57E-10	7.60E-09
CO	0.00E+00	0.00E+00	0.00E+00	0.00E+00	0.00E+00	0.00E+00	0.00E+00	0.00E+00	0.00E+00
CO_2	7.01E-18	2.58E-18	1.51E-10	0.00E+00	4.76E-15	1.03E-07	1.03E-07	4.67E-11	5.41E-10
CO_3^{-2}	4.07E-16	2.04E-16	1.20E-08	1.38E-10	0.00E+00	0.00E+00	1.21E-08	5.50E-12	6.37E-11
Cr^{+3}	4.83E-15	2.10E-15	1.23E-07	7.39E-08	0.00E+00	0.00E+00	1.97E-07	8.96E-11	1.04E-09
Cu^{+2}	4.67E-23	2.48E-23	1.45E-15	5.14E-09	0.00E+00	0.00E+00	5.14E-09	2.34E-12	2.70E-11
F^-	9.70E-13	1.54E-13	9.03E-06	6.78E-14	0.00E+00	0.00E+00	9.03E-06	4.11E-09	4.75E-08
Fe^{+3}	1.68E-14	7.84E-15	4.60E-07	3.04E-06	0.00E+00	0.00E+00	3.50E-06	1.59E-09	1.84E-08
H_2O	2.93E-09	4.40E-10	2.59E-02	0.00E+00	3.48E-04	3.07E+03	3.07E+03	1.40E+00	1.62E+01
$H_2O(b)$	0.00E+00	0.00E+00	0.00E+00	0.00E+00	0.00E+00	0.00E+00	0.00E+00	0.00E+00	0.00E+00
H^+	4.00E-15	3.37E-17	1.98E-09	0.00E+00	0.00E+00	0.00E+00	1.98E-09	8.99E-13	1.04E-11
HCL	0.00E+00	0.00E+00	0.00E+00	0.00E+00	0.00E+00	0.00E+00	0.00E+00	0.00E+00	0.00E+00
HCO3-	2.12E-14	1.08E-14	6.33E-07	7.68E-29	0.00E+00	0.00E+00	6.33E-07	2.88E-10	3.33E-09
H2CO3	0.00E+00	0.00E+00	0.00E+00	0.00E+00	0.00E+00	0.00E+00	0.00E+00	0.00E+00	0.00E+00
HF	0.00E+00	0.00E+00	0.00E+00	0.00E+00	0.00E+00	0.00E+00	0.00E+00	0.00E+00	0.00E+00
Hg^{+2}	0.00E+00	0.00E+00	0.00E+00	3.44E-06	0.00E+00	0.00E+00	3.44E-06	1.56E-09	1.81E-08
HNO_3	0.00E+00	0.00E+00	0.00E+00	0.00E+00	0.00E+00	0.00E+00	0.00E+00	0.00E+00	0.00E+00
K^+	5.33E-14	1.74E-14	1.02E-06	2.45E-23	0.00E+00	0.00E+00	1.02E-06	4.64E-10	5.37E-09
La^{+3}	1.31E-23	1.51E-23	8.89E-16	7.63E-08	0.00E+00	0.00E+00	7.63E-08	3.47E-11	4.01E-10
Li^+	1.29E-13	7.47E-15	4.39E-07	4.49E-07	0.00E+00	0.00E+00	8.88E-07	4.04E-10	4.67E-09
Mg^{+2}	3.85E-22	7.81E-23	4.59E-15	4.91E-08	0.00E+00	0.00E+00	4.91E-08	2.23E-11	2.59E-10
Mn^{+3}	4.17E-22	1.91E-22	1.12E-14	3.98E-07	0.00E+00	0.00E+00	3.98E-07	1.81E-10	2.10E-09
MnO_4^-	0.00E+00	0.00E+00	0.00E+00	0.00E+00	0.00E+00	0.00E+00	0.00E+00	0.00E+00	0.00E+00
N_2	0.00E+00	0.00E+00	0.00E+00	0.00E+00	2.81E-02	3.86E+05	3.86E+05	1.75E+02	2.03E+03
Na^+	5.15E-12	9.87E-13	5.80E-05	7.31E-12	0.00E+00	0.00E+00	5.80E-05	2.64E-08	3.05E-07
NH3	8.07E-16	1.15E-16	6.74E-09	0.00E+00	0.00E+00	0.00E+00	6.74E-09	3.06E-12	3.54E-11
NH4+	1.41E-13	1.15E-16	1.25E-06	0.00E+00	0.00E+00	0.00E+00	1.25E-06	5.68E-10	6.57E-09
Ni^{+2}	2.28E-15	1.12E-15	6.55E-08	1.50E-07	0.00E+00	0.00E+00	2.16E-07	9.82E-11	1.14E-09
NO	0.00E+00	0.00E+00	0.00E+00	0.00E+00	0.00E+00	0.00E+00	0.00E+00	0.00E+00	0.00E+00
NO_2	0.00E+00	0.00E+00	0.00E+00	0.00E+00	0.00E+00	0.00E+00	0.00E+00	0.00E+00	0.00E+00
NO_2^-	7.25E-19	2.78E-19	1.64E-11	2.12E-11	0.00E+00	0.00E+00	3.75E-11	1.71E-14	1.97E-13
NO_3^-	2.93E-12	1.52E-12	8.91E-05	1.63E-11	0.00E+00	0.00E+00	8.91E-05	4.05E-08	4.69E-07
O_2	0.00E+00	0.00E+00	0.00E+00	0.00E+00	7.47E-03	1.17E+05	1.17E+05	5.33E+01	6.17E+02
O^-	0.00E+00	0.00E+00	0.00E+00	2.77E-05	0.00E+00	0.00E+00	2.77E-05	1.26E-08	1.46E-07
OH^-	1.75E-12	2.49E-13	1.46E-05	3.97E-10	0.00E+00	0.00E+00	1.46E-05	6.64E-09	7.68E-08
OH(b)$^-$	7.40E-19	1.05E-19	6.17E-12	3.76E-34	0.00E+00	0.00E+00	6.17E-12	2.80E-15	3.24E-14
Pb^{+2}	1.71E-22	2.95E-22	1.73E-14	2.20E-07	0.00E+00	0.00E+00	2.20E-07	1.00E-10	1.16E-09
Pd^{+2}	1.33E-23	1.18E-23	6.95E-16	3.59E-09	0.00E+00	0.00E+00	3.59E-09	1.63E-12	1.89E-11
PO_4^{-3}	1.37E-20	1.08E-20	6.36E-13	2.04E-06	0.00E+00	0.00E+00	2.04E-06	9.28E-10	1.07E-08
Resin	0.00E+00	0.00E+00	0.00E+00	0.00E+00	0.00E+00	0.00E+00	0.00E+00	0.00E+00	0.00E+00
Rh^{+3}	1.29E-23	1.11E-23	6.50E-16	6.35E-09	0.00E+00	0.00E+00	6.35E-09	2.89E-12	3.34E-11
Ru^{+3}	1.90E-23	1.60E-23	9.39E-16	5.47E-07	0.00E+00	0.00E+00	5.47E-07	2.49E-10	2.88E-09
S^{+6}	0.00E+00	0.00E+00	0.00E+00	1.08E-29	0.00E+00	0.00E+00	1.08E-29	4.89E-33	5.66E-32
SiO2	2.58E-21	1.29E-21	7.60E-14	1.72E-05	0.00E+00	0.00E+00	1.72E-05	7.83E-09	9.06E-08
SiO_4^{-4}	1.97E-33	1.52E-33	8.90E-26	1.32E-12	0.00E+00	0.00E+00	1.32E-12	5.98E-16	6.92E-15
SO_2	0.00E+00	0.00E+00	0.00E+00	0.00E+00	0.00E+00	0.00E+00	0.00E+00	0.00E+00	0.00E+00
SO_4^{-2}	3.26E-20	2.61E-20	1.53E-12	1.93E-13	0.00E+00	0.00E+00	1.73E-12	7.85E-16	9.09E-15
Sr^{+2}	1.68E-16	1.23E-16	7.20E-09	4.17E-09	0.00E+00	0.00E+00	1.14E-08	5.17E-12	5.98E-11
Sucrose	0.00E+00	0.00E+00	0.00E+00	0.00E+00	0.00E+00	0.00E+00	0.00E+00	0.00E+00	0.00E+00
Ti^{+4}	2.15E-23	8.58E-24	5.04E-16	1.04E-09	0.00E+00	0.00E+00	1.04E-09	4.73E-13	5.47E-12
Zn^{+2}	7.96E-23	4.34E-23	2.55E-15	9.66E-07	0.00E+00	0.00E+00	9.66E-07	4.39E-10	5.08E-09
Zr^{+4}	5.87E-23	4.47E-23	2.63E-15	4.83E-07	0.00E+00	0.00E+00	4.83E-07	2.20E-10	2.54E-09

Components	Aqueous Comp			Solid Comp	Gaseous		Total Comp		
Unit	mol/L	Lb/gal	Lb/day	Lb/day	mol/L	Lb/day	Lb/day	Mt/day	g/sec
Total	1.72E-20	1.26E-20	7.42E-13	3.01E-04	0.00E+00	0.00E+00	3.01E-04	1.37E-07	1.59E-06
$C_2O_4^{-2}$	1.72E-20	1.26E-20	7.42E-13	3.01E-04	0.00E+00	0.00E+00	3.01E-04	1.37E-07	1.59E-06
Formate	0.00E+00	0.00E+00	0.00E+00	0.00E+00	0.00E+00	0.00E+00	0.00E+00	0.00E+00	0.00E+00
Acetate	0.00E+00	0.00E+00	0.00E+00	1.89E-26	0.00E+00	0.00E+00	1.89E-26	8.59E-30	9.94E-29
Glycolate	0.00E+00	0.00E+00	0.00E+00	0.00E+00	0.00E+00	0.00E+00	0.00E+00	0.00E+00	0.00E+00
IDA	0.00E+00	0.00E+00	0.00E+00	0.00E+00	0.00E+00	0.00E+00	0.00E+00	0.00E+00	0.00E+00
Citrate	0.00E+00	0.00E+00	0.00E+00	5.15E-27	0.00E+00	0.00E+00	5.15E-27	2.34E-30	2.71E-29
HEDTA	0.00E+00	0.00E+00	0.00E+00	6.87E-27	0.00E+00	0.00E+00	6.87E-27	3.12E-30	3.61E-29
EDTA	0.00E+00	0.00E+00	0.00E+00	0.00E+00	0.00E+00	0.00E+00	0.00E+00	0.00E+00	0.00E+00

Rad. Comp	Aqueous Rad. Comp			Solids Rad. Comp (1)			Total Rad. Comp (1)		
Unit	Ci/L	Ci/day	Lb/day	Ci/L	Ci/day	Lb/day	Ci/L	Ci/day	Lb/day
Total	1.69E-12	3.76E-04	6.00E-09	1.59E-11	3.53E-03	1.33E-05	1.76E-11	3.90E-03	1.33E-05
^{241}Am	2.59E-22	5.75E-14	3.70E-17	4.20E-14	9.34E-06	6.01E-09	4.20E-14	9.34E-06	6.01E-09
^{243}Am	1.69E-25	3.76E-17	4.15E-19	3.41E-18	7.58E-10	8.37E-12	3.41E-18	7.58E-10	8.37E-12
^{14}C	0.00E+00	0.00E+00	0.00E+00	0.00E+00	0.00E+00	0.00E+00	0.00E+00	0.00E+00	0.00E+00
^{60}Co	3.49E-23	7.76E-15	1.51E-20	3.75E-15	8.35E-07	1.63E-12	3.75E-15	8.35E-07	1.63E-12
^{243}Cm	2.80E-26	6.23E-18	2.72E-22	4.73E-17	1.05E-08	4.59E-13	4.73E-17	1.05E-08	4.59E-13
^{244}Cm	6.63E-25	1.48E-16	4.02E-21	1.07E-15	2.39E-07	6.51E-12	1.07E-15	2.39E-07	6.51E-12
^{137}Cs	7.61E-17	1.69E-08	4.30E-13	1.45E-11	3.23E-03	8.19E-08	1.45E-11	3.23E-03	8.19E-08
^{152}Eu	1.95E-24	4.33E-16	5.49E-21	1.80E-16	4.00E-08	5.08E-13	1.80E-16	4.00E-08	5.08E-13
^{154}Eu	4.03E-22	8.97E-14	7.32E-19	1.95E-14	4.34E-06	3.54E-11	1.95E-14	4.34E-06	3.54E-11
^{155}Eu	1.17E-22	2.59E-14	1.18E-19	2.89E-15	6.44E-07	2.92E-12	2.89E-15	6.44E-07	2.92E-12
^{3}H	2.11E-23	4.68E-15	1.07E-21	2.44E-15	5.43E-07	1.25E-13	2.44E-15	5.43E-07	1.25E-13
^{129}I	0.00E+00	0.00E+00	0.00E+00	7.71E-19	1.72E-10	2.14E-09	7.71E-19	1.72E-10	2.14E-09
^{63}Ni	6.25E-22	1.39E-13	5.39E-18	5.60E-16	1.25E-07	4.83E-12	5.60E-16	1.25E-07	4.83E-12
^{237}Np	2.06E-25	4.57E-17	1.43E-16	2.77E-17	6.16E-09	1.93E-08	2.77E-17	6.16E-09	1.93E-08
^{238}Pu	1.16E-24	2.57E-16	3.31E-20	1.31E-16	2.92E-08	3.76E-12	1.31E-16	2.92E-08	3.76E-12
^{239}Pu	1.60E-23	3.56E-15	1.26E-16	1.16E-15	2.59E-07	9.20E-09	1.16E-15	2.59E-07	9.20E-09
^{240}Pu	4.15E-24	9.23E-16	8.96E-18	3.07E-16	6.83E-08	6.64E-10	3.07E-16	6.83E-08	6.64E-10
^{241}Pu	8.71E-23	1.94E-14	4.15E-19	8.25E-15	1.83E-06	3.93E-11	8.25E-15	1.83E-06	3.93E-11
^{242}Pu	4.39E-28	9.77E-20	5.47E-20	2.06E-21	4.59E-13	2.57E-13	2.06E-21	4.59E-13	2.57E-13
^{125}Sb	2.41E-22	5.36E-14	1.14E-19	8.65E-15	1.92E-06	4.09E-12	8.65E-15	1.92E-06	4.09E-12
^{151}Sm	3.41E-21	7.59E-13	8.35E-17	8.03E-14	1.79E-05	1.50E-09	8.03E-14	1.79E-05	1.50E-09
^{126}Sn	3.83E-24	8.52E-16	1.65E-16	3.38E-17	7.51E-09	1.46E-09	3.38E-17	7.51E-09	1.46E-09
^{90}Sr	1.69E-12	3.76E-04	6.00E-09	9.78E-13	2.18E-04	3.47E-09	2.67E-12	5.94E-04	9.47E-09
^{99}Tc	6.69E-22	1.49E-13	1.93E-14	2.02E-13	4.49E-05	5.84E-06	2.02E-13	4.49E-05	5.84E-06
^{232}Th	6.30E-27	1.40E-18	2.81E-14	9.09E-19	2.02E-10	4.05E-06	9.09E-19	2.02E-10	4.05E-06
^{233}U	2.08E-25	4.63E-17	1.06E-17	7.50E-17	1.67E-08	3.82E-09	7.50E-17	1.67E-08	3.82E-09
^{234}U	1.48E-25	3.29E-17	1.17E-17	3.91E-18	8.69E-10	3.08E-10	3.91E-18	8.69E-10	3.08E-10
^{235}U	5.82E-27	1.30E-18	1.32E-15	8.79E-20	1.96E-11	2.00E-08	8.79E-20	1.96E-11	2.00E-08
^{236}U	9.98E-27	2.22E-18	7.56E-17	1.21E-19	2.69E-11	9.16E-10	1.21E-19	2.69E-11	9.16E-10
^{238}U	1.15E-25	2.57E-17	1.68E-13	2.20E-18	4.89E-10	3.21E-06	2.20E-18	4.89E-10	3.21E-06

(1) All radionuclides in gaseous streams are assumed to exist as solid particulate.

CAS Comp	Organic Components			Mt/day	g/sec
Unit	mol/L	Lb/gal	Lb/day		
Total	7.22E-15	1.30E-14	7.62E-07	3.46E-10	4.01E-09
50-32-8	1.54E-15	3.25E-15	1.91E-07	8.68E-11	1.00E-09
56-23-5	1.64E-62	2.11E-62	1.24E-54	5.63E-58	6.52E-57
57-14-7	1.27E-44	6.38E-45	3.75E-37	1.70E-40	1.97E-39
58-90-2	2.56E-31	4.96E-31	2.91E-23	1.32E-26	1.53E-25
59-89-2	0.00E+00	0.00E+00	0.00E+00	0.00E+00	0.00E+00
60-35-5	0.00E+00	0.00E+00	0.00E+00	0.00E+00	0.00E+00
62-75-9	0.00E+00	0.00E+00	0.00E+00	0.00E+00	0.00E+00
64-19-7	0.00E+00	0.00E+00	0.00E+00	0.00E+00	0.00E+00
71-43-2	3.15E-56	2.05E-56	1.20E-48	5.48E-52	6.34E-51
75-05-8	1.48E-45	5.06E-46	2.98E-38	1.35E-41	1.57E-40
75-12-7	1.67E-29	6.28E-30	3.69E-22	1.68E-25	1.94E-24
76-15-3	0.00E+00	0.00E+00	0.00E+00	0.00E+00	0.00E+00
79-01-6	2.21E-58	2.42E-58	1.42E-50	6.46E-54	7.47E-53
83-32-9	0.00E+00	0.00E+00	0.00E+00	0.00E+00	0.00E+00
84-66-2	7.44E-30	1.38E-29	8.10E-22	3.68E-25	4.26E-24
84-74-2	6.17E-16	1.43E-15	8.43E-08	3.83E-11	4.43E-10
87-68-3	7.94E-60	1.73E-59	1.01E-51	4.61E-55	5.34E-54
88-89-1	0.00E+00	0.00E+00	0.00E+00	0.00E+00	0.00E+00
91-20-3	6.46E-50	6.91E-50	4.06E-42	1.84E-45	2.14E-44
95-50-1	0.00E+00	0.00E+00	0.00E+00	0.00E+00	0.00E+00
98-86-2	9.09E-31	9.14E-31	5.37E-23	2.44E-26	2.82E-25
100-21-0	3.34E-15	4.63E-15	2.72E-07	1.24E-10	1.43E-09
101-84-8	0.00E+00	0.00E+00	0.00E+00	0.00E+00	0.00E+00
106-93-4	2.72E-49	4.27E-49	2.51E-41	1.14E-44	1.32E-43
106-97-8	0.00E+00	0.00E+00	0.00E+00	0.00E+00	0.00E+00
106-99-0	0.00E+00	0.00E+00	0.00E+00	0.00E+00	0.00E+00
108-87-2	0.00E+00	0.00E+00	0.00E+00	0.00E+00	0.00E+00
108-88-3	2.69E-56	2.07E-56	1.21E-48	5.52E-52	6.39E-51
108-95-2	1.91E-29	1.50E-29	8.83E-22	4.01E-25	4.65E-24
110-54-3	0.00E+00	0.00E+00	0.00E+00	0.00E+00	0.00E+00
110-82-7	0.00E+00	0.00E+00	0.00E+00	0.00E+00	0.00E+00
111-84-2	0.00E+00	0.00E+00	0.00E+00	0.00E+00	0.00E+00
120-12-7	1.62E-18	2.41E-18	1.42E-10	6.44E-14	7.45E-13
120-82-1	5.74E-52	8.69E-52	5.11E-44	2.32E-47	2.69E-46
122-39-4	1.29E-16	1.83E-16	1.07E-08	4.88E-12	5.65E-11
126-73-8	1.41E-15	3.13E-15	1.84E-07	8.35E-11	9.66E-10
127-18-4	2.92E-61	4.05E-61	2.38E-53	1.08E-56	1.25E-55
129-00-0	4.69E-17	7.92E-17	4.65E-09	2.11E-12	2.45E-11
132-64-9	2.02E-47	2.83E-47	1.66E-39	7.57E-43	8.76E-42
144-62-7	3.13E-32	2.35E-32	1.38E-24	6.28E-28	7.27E-27
193-39-5	8.36E-21	1.93E-20	1.13E-12	5.15E-16	5.96E-15
206-44-0	0.00E+00	0.00E+00	0.00E+00	0.00E+00	0.00E+00
208-96-8	8.02E-34	1.02E-33	5.98E-26	2.72E-29	3.15E-28
603-34-9	1.29E-16	2.64E-16	1.55E-08	7.04E-12	8.15E-11
621-64-7	0.00E+00	0.00E+00	0.00E+00	0.00E+00	0.00E+00
1321-64-8	0.00E+00	0.00E+00	0.00E+00	0.00E+00	0.00E+00
1336-36-3	1.45E-21	3.91E-21	2.29E-13	1.04E-16	1.21E-15
3697-24-3	0.00E+00	0.00E+00	0.00E+00	0.00E+00	0.00E+00
4170-30-3	0.00E+00	0.00E+00	0.00E+00	0.00E+00	0.00E+00
10061-01-5	1.82E-53	1.69E-53	9.91E-46	4.50E-49	5.21E-48
26140-60-3	0.00E+00	0.00E+00	0.00E+00	0.00E+00	0.00E+00

Stream Number:	PVP12
Stream Name:	Carbon bed adsorber discharge
Configuration:	MRQ-05-0049.acmf
Run Date / Time:	12/14/2005 - 1:42:25 PM
Run Data File:	H:\ACM v3.1\MRQ-05-0049\MRQ_05_0049A_Streams.csv

Stream Properties			
Variable	Value	Units	
Density	9.01E-04	g/cm^3	(does not include solid phase)
Enthalpy	-3.82E+06	BTU/hr	
Mass Flow	3.25E+04	Lb/hr	
	7.81E+05	Lb/day	
Volumetric Flow	7.21E+04	GPM	(does not include solid phase)
	9.64E+03	ft^3/min	(does not include solid phase)
Molar Flow	1.14E+03	Lbmol/hr	
Molecular Weight	2.85E+01	Lb/Lbmol	
Pressure	8.10E+02	mbar	
Temperature	3.49E+01	C	
Na Molarity	0.00E+00	mol/L	
pH	1.02E+01	pH	
Total TRU	5.47E-20	Ci/L	
Total Activity	5.64E-12	Ci/L	

Component	Aqueous Comp			Solid Comp	Gaseous (1)		Total Comp		
Unit	mol/L	Lb/gal	Lb/day	Lb/day	mol/L	Lb/day	Lb/day	mt/day	g/sec
Total	6.85E-11	1.92E-12	1.77E-04	4.34E-05	3.16E-02	7.81E+05	7.81E+05	3.55E+02	4.11E+03
Ag^+	3.05E-22	2.75E-22	2.85E-14	1.17E-13	0.00E+00	0.00E+00	1.45E-13	6.61E-17	7.65E-16
Al^{+3}	2.91E-18	6.55E-19	6.80E-11	1.36E-11	0.00E+00	0.00E+00	8.15E-11	3.71E-14	4.29E-13
As^{+3}	1.23E-21	7.69E-22	7.99E-14	1.37E-14	0.00E+00	0.00E+00	9.36E-14	4.25E-17	4.92E-16
B^{+3}	2.17E-20	1.96E-21	2.03E-13	3.44E-12	0.00E+00	0.00E+00	3.64E-12	1.66E-15	1.92E-14
Ba^{+2}	2.90E-22	3.32E-22	3.45E-14	1.08E-13	0.00E+00	0.00E+00	1.42E-13	6.45E-17	7.47E-16
Bi^{+3}	1.77E-22	3.09E-22	3.20E-14	3.03E-13	0.00E+00	0.00E+00	3.35E-13	1.52E-16	1.76E-15
Ca^{+2}	4.45E-19	1.49E-19	1.54E-11	2.21E-11	0.00E+00	0.00E+00	3.76E-11	1.71E-14	1.98E-13
Cd^{+2}	2.87E-22	2.69E-22	2.79E-14	2.38E-13	0.00E+00	0.00E+00	2.66E-13	1.21E-16	1.40E-15
Ce^{+3}	1.11E-20	1.30E-20	1.35E-12	1.22E-13	0.00E+00	0.00E+00	1.48E-12	6.71E-16	7.76E-15
Cl^-	3.85E-19	1.14E-19	1.18E-11	7.73E-14	0.00E+00	0.00E+00	1.19E-11	5.41E-15	6.26E-14
CO	1.30E-38	3.04E-39	3.15E-31	0.00E+00	1.13E-71	2.73E-64	3.15E-31	1.43E-34	1.66E-33
CO_2	0.00E+00	0.00E+00	0.00E+00	0.00E+00	1.12E-12	4.28E-05	4.28E-05	1.95E-08	2.25E-07
CO_3^{-2}	2.71E-18	1.36E-18	1.41E-10	1.30E-11	0.00E+00	0.00E+00	1.54E-10	7.00E-14	8.10E-13
Cr^{+3}	4.77E-20	2.07E-20	2.15E-12	2.04E-13	0.00E+00	0.00E+00	2.35E-12	1.07E-15	1.24E-14
Cu^{+2}	5.16E-22	2.74E-22	2.84E-14	4.42E-14	0.00E+00	0.00E+00	7.26E-14	3.30E-17	3.82E-16
F^-	1.66E-19	2.63E-20	2.74E-12	1.28E-12	0.00E+00	0.00E+00	4.02E-12	1.83E-15	2.11E-14
Fe^{+3}	1.67E-20	7.79E-21	8.09E-13	1.76E-11	0.00E+00	0.00E+00	1.84E-11	8.37E-15	9.69E-14
H_2O	0.00E+00	0.00E+00	0.00E+00	0.00E+00	1.06E-03	1.65E+04	1.65E+04	7.49E+00	8.67E+01
$H_2O(b)$	0.00E+00	0.00E+00	0.00E+00	0.00E+00	0.00E+00	0.00E+00	0.00E+00	0.00E+00	0.00E+00
H^+	6.35E-11	5.34E-13	5.55E-05	0.00E+00	0.00E+00	0.00E+00	5.55E-05	2.52E-08	2.92E-07
HCL	0.00E+00	0.00E+00	0.00E+00	0.00E+00	2.37E-35	7.49E-28	7.49E-28	3.40E-31	3.94E-30
HCO3-	2.41E-24	1.23E-24	1.27E-16	0.00E+00	0.00E+00	0.00E+00	1.27E-16	5.79E-20	6.70E-19
H2CO3	6.60E-28	3.42E-28	3.55E-20	0.00E+00	0.00E+00	0.00E+00	3.55E-20	1.61E-23	1.87E-22
HF	0.00E+00	0.00E+00	0.00E+00	0.00E+00	3.11E-36	5.39E-29	5.39E-29	2.45E-32	2.84E-31
Hg^{+2}	6.92E-14	1.16E-13	1.20E-05	4.34E-05	0.00E+00	0.00E+00	5.55E-05	2.52E-08	2.92E-07
HNO_3	0.00E+00	0.00E+00	0.00E+00	0.00E+00	2.88E-34	1.57E-26	1.57E-26	7.15E-30	8.28E-29
K^+	8.32E-19	2.72E-19	2.82E-11	2.14E-13	0.00E+00	0.00E+00	2.84E-11	1.29E-14	1.49E-13
La^{+3}	1.31E-22	1.52E-22	1.58E-14	1.79E-13	0.00E+00	0.00E+00	1.95E-13	8.86E-17	1.03E-15
Li^+	1.74E-20	1.01E-21	1.05E-13	8.02E-14	0.00E+00	0.00E+00	1.85E-13	8.40E-17	9.72E-16
Mg^{+2}	3.92E-20	7.95E-21	8.25E-13	2.65E-12	0.00E+00	0.00E+00	3.47E-12	1.58E-15	1.83E-14
Mn^{+3}	4.34E-21	1.99E-21	2.07E-13	1.44E-12	0.00E+00	0.00E+00	1.65E-12	7.49E-16	8.67E-15
MnO_4^-	0.00E+00	0.00E+00	0.00E+00	0.00E+00	0.00E+00	0.00E+00	0.00E+00	0.00E+00	0.00E+00
N_2	2.62E-12	6.13E-13	6.37E-05	0.00E+00	2.41E-02	5.86E+05	5.86E+05	2.66E+02	3.08E+03
Na^+	2.22E-17	4.26E-18	4.43E-10	1.44E-11	0.00E+00	0.00E+00	4.57E-10	2.08E-13	2.40E-12
NH3	1.51E-12	2.14E-13	2.22E-05	0.00E+00	3.47E-11	5.12E-04	5.34E-04	2.43E-07	2.81E-06
NH4+	8.31E-16	2.14E-13	1.30E-08	0.00E+00	0.00E+00	0.00E+00	1.30E-08	5.91E-12	6.83E-11
Ni^{+2}	4.06E-21	1.99E-21	2.06E-13	3.87E-13	0.00E+00	0.00E+00	5.93E-13	2.70E-16	3.12E-15
NO	7.86E-36	1.97E-36	2.04E-28	0.00E+00	0.00E+00	0.00E+00	2.04E-28	9.29E-32	1.07E-30
NO_2	0.00E+00	0.00E+00	0.00E+00	0.00E+00	3.97E-50	1.58E-42	1.58E-42	7.19E-46	8.32E-45
NO_2^-	4.36E-18	1.67E-18	1.74E-10	3.60E-12	0.00E+00	0.00E+00	1.77E-10	8.06E-14	9.33E-13
NO_3^-	8.81E-18	4.56E-18	4.73E-10	2.93E-12	0.00E+00	0.00E+00	4.76E-10	2.16E-13	2.51E-12
O_2	8.45E-13	2.26E-13	2.34E-05	0.00E+00	6.42E-03	1.78E+05	1.78E+05	8.09E+01	9.36E+02
O^-	0.00E+00	0.00E+00	0.00E+00	1.51E-11	0.00E+00	0.00E+00	1.51E-11	6.87E-15	7.95E-14
OH^-	2.08E-17	2.95E-18	3.06E-10	5.37E-11	0.00E+00	0.00E+00	3.60E-10	1.64E-13	1.89E-12
$OH(b)^-$	3.28E-25	4.66E-26	4.84E-18	1.49E-27	0.00E+00	0.00E+00	4.84E-18	2.20E-21	2.55E-20
Pb^{+2}	1.01E-21	1.75E-21	1.82E-13	4.96E-13	0.00E+00	0.00E+00	6.77E-13	3.08E-16	3.56E-15
Pd^{+2}	7.99E-23	7.09E-23	7.37E-15	2.07E-14	0.00E+00	0.00E+00	2.81E-14	1.28E-17	1.48E-16
PO_4^{-3}	1.38E-19	1.10E-19	1.14E-11	3.81E-12	0.00E+00	0.00E+00	1.52E-11	6.90E-15	7.99E-14
Resin	0.00E+00	0.00E+00	0.00E+00	0.00E+00	0.00E+00	0.00E+00	0.00E+00	0.00E+00	0.00E+00
Rh^{+3}	7.54E-23	6.48E-23	6.72E-15	6.58E-15	0.00E+00	0.00E+00	1.33E-14	6.05E-18	7.00E-17
Ru^{+3}	1.12E-22	9.45E-23	9.81E-15	5.96E-14	0.00E+00	0.00E+00	6.94E-14	3.16E-17	3.65E-16
S^{+6}	0.00E+00	0.00E+00	0.00E+00	2.46E-28	0.00E+00	0.00E+00	2.46E-28	1.12E-31	1.29E-30
SiO2	4.61E-20	2.31E-20	2.40E-12	1.32E-11	0.00E+00	0.00E+00	1.56E-11	7.08E-15	8.19E-14
SiO_4^{-4}	2.54E-27	1.95E-27	2.03E-19	1.98E-18	0.00E+00	0.00E+00	2.18E-18	9.90E-22	1.15E-20
SO_2	7.59E-38	4.06E-38	4.21E-30	0.00E+00	0.00E+00	0.00E+00	4.21E-30	1.91E-33	2.22E-32
SO_4^{-2}	2.11E-19	1.69E-19	1.76E-11	8.60E-13	0.00E+00	0.00E+00	1.84E-11	8.37E-15	9.69E-14
Sr^{+2}	4.05E-23	2.96E-23	3.07E-15	3.21E-14	0.00E+00	0.00E+00	3.52E-14	1.60E-17	1.85E-16
Sucrose	0.00E+00	0.00E+00	0.00E+00	3.09E-45	0.00E+00	0.00E+00	3.09E-45	1.40E-48	1.62E-47
Ti^{+4}	2.42E-22	9.66E-23	1.00E-14	3.88E-14	0.00E+00	0.00E+00	4.88E-14	2.22E-17	2.57E-16
Zn^{+2}	8.22E-22	4.49E-22	4.66E-14	7.91E-13	0.00E+00	0.00E+00	8.38E-13	3.81E-16	4.41E-15
Zr^{+4}	6.67E-22	5.08E-22	5.27E-14	4.36E-12	0.00E+00	0.00E+00	4.41E-12	2.01E-15	2.32E-14

Components	Aqueous Comp			Solid Comp	Gaseous		Total Comp		
Unit	mol/L	Lb/gal	Lb/day	Lb/day	mol/L	Lb/day	Lb/day	Mt/day	g/sec
Total	4.30E-22	3.16E-22	3.28E-14	1.24E-13	0.00E+00	0.00E+00	1.56E-13	7.10E-17	8.22E-16
$C_2O_4^{-2}$	4.30E-22	3.16E-22	3.28E-14	1.24E-13	0.00E+00	0.00E+00	1.56E-13	7.10E-17	8.22E-16
Formate	6.83E-29	2.57E-29	2.66E-21	3.25E-20	0.00E+00	0.00E+00	3.52E-20	1.60E-23	1.85E-22
Acetate	5.29E-29	2.61E-29	2.71E-21	3.30E-20	0.00E+00	0.00E+00	3.57E-20	1.62E-23	1.88E-22
Glycolate	3.52E-28	2.21E-28	2.29E-20	3.27E-20	0.00E+00	0.00E+00	5.56E-20	2.53E-23	2.92E-22
IDA	1.78E-28	1.98E-28	2.05E-20	1.02E-20	0.00E+00	0.00E+00	3.07E-20	1.40E-23	1.62E-22
Citrate	1.63E-29	2.61E-29	2.71E-21	1.31E-20	0.00E+00	0.00E+00	1.58E-20	7.18E-24	8.31E-23
HEDTA	7.62E-29	1.77E-28	1.84E-20	1.23E-20	0.00E+00	0.00E+00	3.07E-20	1.39E-23	1.61E-22
EDTA	9.15E-30	2.23E-29	2.32E-21	1.25E-20	0.00E+00	0.00E+00	1.49E-20	6.76E-24	7.82E-23

Rad. Comp	Aqueous Rad. Comp			Solids Rad. Comp (1)			Total Rad. Comp (1)		
Unit	Ci/L	Ci/day	Lb/day	Ci/L	Ci/day	Lb/day	Ci/L	Ci/day	Lb/day
Total	3.83E-14	1.50E-05	4.12E-07	5.60E-12	2.20E-03	8.93E-08	5.64E-12	2.22E-03	5.01E-07
^{241}Am	1.53E-21	6.01E-13	3.87E-16	3.89E-20	1.53E-11	9.85E-15	4.05E-20	1.59E-11	1.02E-14
^{243}Am	9.98E-25	3.92E-16	4.33E-18	3.14E-24	1.24E-15	1.37E-17	4.14E-24	1.63E-15	1.80E-17
^{14}C	7.51E-15	2.95E-06	1.46E-09	6.41E-16	2.52E-07	1.24E-10	8.15E-15	3.21E-06	1.58E-09
^{60}Co	3.52E-22	1.38E-13	2.70E-19	7.15E-21	2.81E-12	5.48E-18	7.51E-21	2.95E-12	5.75E-18
^{243}Cm	3.00E-25	1.18E-16	5.14E-21	9.05E-23	3.56E-14	1.55E-18	9.08E-23	3.57E-14	1.56E-18
^{244}Cm	6.70E-24	2.63E-15	7.17E-20	2.06E-21	8.09E-13	2.20E-17	2.06E-21	8.12E-13	2.21E-17
^{137}Cs	6.43E-18	2.53E-09	6.42E-14	8.43E-19	3.31E-10	8.42E-15	7.27E-18	2.86E-09	7.26E-14
^{152}Eu	1.15E-23	4.52E-15	5.74E-20	2.07E-22	8.14E-14	1.03E-18	2.19E-22	8.59E-14	1.09E-18
^{154}Eu	2.38E-21	9.37E-13	7.65E-18	2.24E-20	8.82E-12	7.20E-17	2.48E-20	9.76E-12	7.96E-17
^{155}Eu	6.90E-22	2.71E-13	1.23E-18	3.32E-21	1.31E-12	5.93E-18	4.01E-21	1.58E-12	7.16E-18
^{3}H	3.07E-14	1.21E-05	2.77E-12	5.60E-12	2.20E-03	5.05E-10	5.63E-12	2.21E-03	5.08E-10
^{129}I	8.36E-17	3.29E-08	4.10E-07	1.81E-17	7.10E-09	8.87E-08	1.02E-16	4.00E-08	4.99E-07
^{63}Ni	3.78E-21	1.49E-12	5.77E-17	7.81E-22	3.07E-13	1.19E-17	4.56E-21	1.79E-12	6.96E-17
^{237}Np	2.08E-24	8.16E-16	2.55E-15	5.30E-23	2.08E-14	6.52E-14	5.51E-23	2.16E-14	6.77E-14
^{238}Pu	6.84E-24	2.69E-15	3.46E-19	1.51E-22	5.95E-14	7.66E-18	1.58E-22	6.22E-14	8.00E-18
^{239}Pu	9.46E-23	3.72E-14	1.32E-15	1.34E-21	5.27E-13	1.87E-14	1.43E-21	5.64E-13	2.00E-14
^{240}Pu	2.45E-23	9.64E-15	9.36E-17	3.54E-22	1.39E-13	1.35E-15	3.78E-22	1.49E-13	1.44E-15
^{241}Pu	5.15E-22	2.02E-13	4.33E-18	9.49E-21	3.73E-12	7.99E-17	1.00E-20	3.93E-12	8.42E-17
^{242}Pu	1.97E-26	7.76E-20	4.34E-20	3.26E-26	1.28E-17	7.18E-18	3.28E-26	1.29E-17	7.22E-18
^{125}Sb	1.43E-21	5.62E-13	1.19E-18	1.38E-20	5.44E-12	1.16E-17	1.53E-20	6.00E-12	1.27E-17
^{151}Sm	2.00E-20	7.85E-12	6.58E-16	1.67E-19	6.56E-11	5.49E-15	1.87E-19	7.34E-11	6.15E-15
^{126}Sn	2.27E-23	8.93E-15	1.73E-15	6.48E-23	2.55E-14	4.95E-15	8.76E-23	3.44E-14	6.68E-15
^{90}Sr	4.92E-19	1.94E-10	3.09E-15	4.27E-18	1.68E-09	2.68E-14	4.76E-18	1.87E-09	2.99E-14
^{99}Tc	6.76E-21	2.66E-12	3.46E-13	1.71E-20	6.71E-12	8.72E-13	2.38E-20	9.36E-12	1.22E-12
^{232}Th	6.69E-26	2.63E-17	5.27E-13	1.75E-24	6.89E-16	1.38E-11	1.82E-24	7.15E-16	1.43E-11
^{233}U	2.10E-24	8.27E-16	1.89E-16	1.44E-22	5.64E-14	1.29E-14	1.46E-22	5.73E-14	1.31E-14
^{234}U	1.49E-24	5.87E-16	2.08E-16	7.47E-24	2.93E-15	1.04E-15	8.96E-24	3.52E-15	1.25E-15
^{235}U	6.23E-26	2.45E-17	2.50E-14	1.90E-25	7.49E-17	7.64E-14	2.53E-25	9.94E-17	1.01E-13
^{236}U	1.07E-25	4.20E-17	1.43E-15	2.61E-25	1.03E-16	3.50E-15	3.68E-25	1.45E-16	4.94E-15
^{238}U	1.17E-24	4.58E-16	3.01E-12	4.22E-24	1.66E-15	1.09E-11	5.39E-24	2.12E-15	1.39E-11

(1) All radionuclides in gaseous streams are assumed to exist as solid particulate.

CAS Comp	Organic Components				
Unit	mol/L	Lb/gal	Lb/day	Mt/day	g/sec
Total	1.96E-08	2.18E-08	2.26E+00	1.03E-03	1.19E-02
50-32-8	5.22E-20	1.10E-19	1.14E-11	5.19E-15	6.00E-14
56-23-5	8.17E-10	1.05E-09	1.09E-01	4.95E-05	5.73E-04
57-14-7	3.12E-12	1.56E-12	1.62E-04	7.38E-08	8.54E-07
58-90-2	2.02E-10	3.91E-10	4.06E-02	1.85E-05	2.14E-04
59-89-2	3.95E-12	3.83E-12	3.98E-04	1.81E-07	2.09E-06
60-35-5	1.57E-15	7.74E-16	8.04E-08	3.65E-11	4.23E-10
62-75-9	1.07E-12	6.59E-13	6.84E-05	3.11E-08	3.60E-07
64-19-7	5.52E-09	2.77E-09	2.87E-01	1.31E-04	1.51E-03
71-43-2	8.04E-11	5.24E-11	5.44E-03	2.47E-06	2.86E-05
75-05-8	1.38E-11	4.73E-12	4.91E-04	2.23E-07	2.58E-06
75-12-7	3.09E-15	1.16E-15	1.21E-07	5.48E-11	6.34E-10
76-15-3	1.02E-08	1.31E-08	1.36E+00	6.18E-04	7.16E-03
79-01-6	1.20E-12	1.31E-12	1.36E-04	6.19E-08	7.16E-07
83-32-9	3.57E-10	4.60E-10	4.77E-02	2.17E-05	2.51E-04
84-66-2	4.05E-14	7.52E-14	7.80E-06	3.55E-09	4.11E-08
84-74-2	4.60E-22	1.07E-21	1.11E-13	5.05E-17	5.84E-16
87-68-3	2.41E-11	5.24E-11	5.44E-03	2.47E-06	2.86E-05
88-89-1	1.49E-18	2.84E-18	2.95E-10	1.34E-13	1.55E-12
91-20-3	1.11E-12	1.19E-12	1.24E-04	5.63E-08	6.51E-07
95-50-1	4.16E-11	5.11E-11	5.30E-03	2.41E-06	2.79E-05
98-86-2	4.69E-11	4.72E-11	4.90E-03	2.23E-06	2.58E-05
100-21-0	3.14E-18	4.36E-18	4.53E-10	2.06E-13	2.38E-12
101-84-8	3.60E-11	5.11E-11	5.31E-03	2.41E-06	2.79E-05
106-93-4	3.18E-10	4.98E-10	5.18E-02	2.35E-05	2.72E-04
106-97-8	2.70E-12	1.31E-12	1.36E-04	6.18E-08	7.16E-07
106-99-0	1.16E-12	5.24E-13	5.44E-05	2.47E-08	2.86E-07
108-87-2	1.60E-12	1.31E-12	1.36E-04	6.20E-08	7.17E-07
108-88-3	6.81E-13	5.24E-13	5.44E-05	2.47E-08	2.86E-07
108-95-2	7.64E-12	6.00E-12	6.23E-04	2.83E-07	3.28E-06
110-54-3	1.82E-12	1.31E-12	1.36E-04	6.18E-08	7.16E-07
110-82-7	1.87E-12	1.31E-12	1.36E-04	6.20E-08	7.17E-07
111-84-2	6.12E-13	6.56E-13	6.81E-05	3.09E-08	3.58E-07
120-12-7	4.96E-12	7.38E-12	7.66E-04	3.48E-07	4.03E-06
120-82-1	1.71E-11	2.59E-11	2.69E-03	1.22E-06	1.41E-05
122-39-4	8.12E-12	1.15E-11	1.19E-03	5.41E-07	6.27E-06
126-73-8	7.51E-15	1.67E-14	1.73E-06	7.88E-10	9.12E-09
127-18-4	3.78E-10	5.24E-10	5.44E-02	2.47E-05	2.86E-04
129-00-0	4.34E-19	7.33E-19	7.61E-11	3.46E-14	4.01E-13
132-64-9	2.67E-10	3.75E-10	3.89E-02	1.77E-05	2.05E-04
144-62-7	3.98E-13	2.99E-13	3.10E-05	1.41E-08	1.63E-07
193-39-5	9.96E-18	2.30E-17	2.39E-09	1.08E-12	1.26E-11
206-44-0	2.73E-10	4.60E-10	4.78E-02	2.17E-05	2.51E-04
208-96-8	2.41E-10	3.06E-10	3.18E-02	1.45E-05	1.67E-04
603-34-9	3.03E-11	6.20E-11	6.44E-03	2.93E-06	3.39E-05
621-64-7	3.53E-12	3.83E-12	3.98E-04	1.81E-07	2.09E-06
1321-64-8	1.84E-10	4.60E-10	4.78E-02	2.17E-05	2.51E-04
1336-36-3	1.26E-19	3.38E-19	3.51E-11	1.59E-14	1.85E-13
3697-24-3	2.28E-10	4.60E-10	4.78E-02	2.17E-05	2.51E-04
4170-30-3	3.90E-13	2.28E-13	2.37E-05	1.08E-08	1.25E-07
10061-01-5	5.64E-11	5.22E-11	5.42E-03	2.46E-06	2.85E-05
26140-60-3	2.40E-10	4.60E-10	4.78E-02	2.17E-05	2.52E-04

Stream Number:	PJV11
Stream Name:	HEPA discharge
Configuration:	MRQ-05-0049.acmf
Run Date / Time:	12/14/2005 - 1:42:25 PM
Run Data File:	H:\ACM v3.1\MRQ-05-0049\MRQ_05_0049A_Streams.csv

Stream Properties			
Variable	Value	Units	
Density	1.07E-03	g/cm^3	(does not include solid phase)
Enthalpy	-9.30E+06	BTU/hr	
Mass Flow	1.85E+05	Lb/hr	
	4.44E+06	Lb/day	
Volumetric Flow	3.44E+05	GPM	(does not include solid phase)
	4.59E+04	ft^3/min	(does not include solid phase)
Molar Flow	6.44E+03	Lbmol/hr	
Molecular Weight	2.87E+01	Lb/Lbmol	
Pressure	9.33E+02	mbar	
Temperature	2.64E+01	C	
Na Molarity	0.00E+00	mol/L	
pH	1.15E+01	pH	
Total TRU	2.20E-18	Ci/L	
Total Activity	5.70E-15	Ci/L	

Component	Aqueous Comp			Solid Comp	Gaseous (1)		Total Comp		
Unit	mol/L	Lb/gal	Lb/day	Lb/day	mol/L	Lb/day	Lb/day	mt/day	g/sec
Total	4.56E-09	6.84E-10	3.39E-01	2.90E-05	3.74E-02	4.44E+06	4.44E+06	2.02E+03	2.34E+04
Ag^+	1.60E-21	1.44E-21	7.13E-13	1.30E-11	0.00E+00	0.00E+00	1.37E-11	6.21E-15	7.19E-14
Al^{+3}	1.94E-17	4.36E-18	2.16E-09	1.79E-09	0.00E+00	0.00E+00	3.95E-09	1.80E-12	2.08E-11
As^{+3}	7.05E-21	4.41E-21	2.18E-12	9.12E-13	0.00E+00	0.00E+00	3.09E-12	1.41E-15	1.63E-14
B^{+3}	1.17E-19	1.06E-20	5.23E-12	8.60E-11	0.00E+00	0.00E+00	9.12E-11	4.14E-14	4.80E-13
Ba^{+2}	1.47E-21	1.69E-21	8.34E-13	1.15E-11	0.00E+00	0.00E+00	1.24E-11	5.63E-15	6.51E-14
Bi^{+3}	1.73E-21	3.03E-21	1.50E-12	6.05E-11	0.00E+00	0.00E+00	6.20E-11	2.82E-14	3.26E-13
Ca^{+2}	1.23E-19	4.11E-20	2.03E-11	7.75E-11	0.00E+00	0.00E+00	9.78E-11	4.45E-14	5.15E-13
Cd^{+2}	2.73E-21	2.56E-21	1.27E-12	4.69E-11	0.00E+00	0.00E+00	4.82E-11	2.19E-14	2.53E-13
Ce^{+3}	5.83E-20	6.81E-20	3.37E-11	1.44E-11	0.00E+00	0.00E+00	4.81E-11	2.19E-14	2.53E-13
Cl^-	3.27E-18	9.67E-19	4.79E-10	1.40E-11	0.00E+00	0.00E+00	4.92E-10	2.24E-13	2.59E-12
CO	9.50E-112	2.22E-112	1.10E-103	0.00E+00	0.00E+00	0.00E+00	1.10E-103	4.99E-107	5.78E-106
CO_2	1.17E-16	4.31E-17	2.13E-08	0.00E+00	3.62E-16	6.58E-08	8.71E-08	3.96E-11	4.58E-10
CO_3^{-2}	1.55E-17	7.77E-18	3.84E-09	1.57E-09	0.00E+00	0.00E+00	5.42E-09	2.46E-12	2.85E-11
Cr^{+3}	4.68E-19	2.03E-19	1.01E-10	3.65E-11	0.00E+00	0.00E+00	1.37E-10	6.23E-14	7.21E-13
Cu^{+2}	2.70E-21	1.43E-21	7.10E-13	4.89E-12	0.00E+00	0.00E+00	5.60E-12	2.55E-15	2.95E-14
F^-	1.54E-18	2.44E-19	1.21E-10	2.54E-10	0.00E+00	0.00E+00	3.75E-10	1.71E-13	1.97E-12
Fe^{+3}	8.38E-20	3.91E-20	1.93E-11	1.84E-09	0.00E+00	0.00E+00	1.86E-09	8.45E-13	9.78E-12
H_2O	4.55E-09	6.84E-10	3.39E-01	0.00E+00	5.26E-04	3.91E+04	3.91E+04	1.78E+01	2.06E+02
$H_2O(b)$	0.00E+00	0.00E+00	0.00E+00	0.00E+00	0.00E+00	0.00E+00	0.00E+00	0.00E+00	0.00E+00
H^+	3.27E-12	2.75E-14	1.36E-05	0.00E+00	0.00E+00	0.00E+00	1.36E-05	6.19E-09	7.17E-08
HCL	0.00E+00	0.00E+00	0.00E+00	0.00E+00	0.00E+00	0.00E+00	0.00E+00	0.00E+00	0.00E+00
HCO3-	1.61E-21	8.20E-22	4.06E-13	9.36E-28	0.00E+00	0.00E+00	4.06E-13	1.84E-16	2.14E-15
H2CO3	0.00E+00	0.00E+00	0.00E+00	0.00E+00	0.00E+00	0.00E+00	0.00E+00	0.00E+00	0.00E+00
HF	0.00E+00	0.00E+00	0.00E+00	0.00E+00	0.00E+00	0.00E+00	0.00E+00	0.00E+00	0.00E+00
Hg^{+2}	2.83E-15	4.74E-15	2.35E-06	2.90E-05	0.00E+00	0.00E+00	3.14E-05	1.43E-08	1.65E-07
HNO_3	0.00E+00	0.00E+00	0.00E+00	0.00E+00	0.00E+00	0.00E+00	0.00E+00	0.00E+00	0.00E+00
K^+	6.72E-18	2.19E-18	1.08E-09	3.59E-11	0.00E+00	0.00E+00	1.12E-09	5.09E-13	5.89E-12
La^{+3}	7.50E-22	8.70E-22	4.30E-13	2.17E-11	0.00E+00	0.00E+00	2.21E-11	1.00E-14	1.16E-13
Li^+	1.01E-19	5.88E-21	2.91E-12	5.37E-12	0.00E+00	0.00E+00	8.28E-12	3.76E-15	4.36E-14
Mg^{+2}	2.23E-20	4.52E-21	2.24E-12	1.60E-11	0.00E+00	0.00E+00	1.82E-11	8.28E-15	9.58E-14
Mn^{+3}	2.42E-20	1.11E-20	5.49E-12	1.69E-10	0.00E+00	0.00E+00	1.75E-10	7.93E-14	9.18E-13
MnO_4^-	0.00E+00	0.00E+00	0.00E+00	0.00E+00	0.00E+00	0.00E+00	0.00E+00	0.00E+00	0.00E+00
N_2	4.77E-14	1.11E-14	5.51E-06	0.00E+00	2.92E-02	3.37E+06	3.37E+06	1.53E+03	1.78E+04
Na^+	2.12E-16	4.06E-17	2.01E-08	2.83E-09	0.00E+00	0.00E+00	2.29E-08	1.04E-11	1.21E-10
NH3	1.44E-13	2.05E-14	1.01E-05	0.00E+00	0.00E+00	0.00E+00	1.01E-05	4.61E-09	5.34E-08
NH4+	1.07E-14	2.05E-14	8.01E-07	4.12E-23	0.00E+00	0.00E+00	8.01E-07	3.64E-10	4.21E-09
Ni^{+2}	3.88E-20	1.90E-20	9.41E-12	7.54E-11	0.00E+00	0.00E+00	8.48E-11	3.86E-14	4.46E-13
NO	5.74E-37	1.44E-37	7.11E-29	0.00E+00	0.00E+00	0.00E+00	7.11E-29	3.23E-32	3.74E-31
NO_2	8.42E-50	3.23E-50	1.60E-41	0.00E+00	0.00E+00	0.00E+00	1.60E-41	7.27E-45	8.42E-44
NO_2^-	4.21E-17	1.62E-17	8.00E-09	7.09E-10	0.00E+00	0.00E+00	8.71E-09	3.96E-12	4.58E-11
NO_3^-	7.40E-17	3.83E-17	1.90E-08	5.47E-10	0.00E+00	0.00E+00	1.95E-08	8.87E-12	1.03E-10
O_2	1.54E-14	4.11E-15	2.03E-06	0.00E+00	7.75E-03	1.02E+06	1.02E+06	4.66E+02	5.39E+03
$O^=$	0.00E+00	0.00E+00	0.00E+00	2.62E-10	0.00E+00	0.00E+00	2.62E-10	1.19E-13	1.38E-12
OH^-	1.24E-16	1.75E-17	8.68E-09	6.48E-09	0.00E+00	0.00E+00	1.52E-08	8.89E-12	7.97E-11
OH(b)	1.87E-25	2.65E-26	1.31E-17	6.92E-31	0.00E+00	0.00E+00	1.31E-17	5.96E-21	6.90E-20
Pb^{+2}	9.92E-21	1.71E-20	8.49E-12	9.90E-11	0.00E+00	0.00E+00	1.07E-10	4.88E-14	5.65E-13
Pd^{+2}	7.68E-22	6.82E-22	3.37E-13	4.06E-12	0.00E+00	0.00E+00	4.40E-12	2.00E-15	2.31E-14
PO_4^{-3}	7.92E-19	6.28E-19	3.11E-10	4.47E-10	0.00E+00	0.00E+00	7.57E-10	3.44E-13	3.98E-12
Resin	0.00E+00	0.00E+00	0.00E+00	0.00E+00	0.00E+00	0.00E+00	0.00E+00	0.00E+00	0.00E+00
Rh^{+3}	7.42E-22	6.38E-22	3.16E-13	1.32E-12	0.00E+00	0.00E+00	1.63E-12	7.41E-16	8.58E-15
Ru^{+3}	1.10E-21	9.31E-22	4.61E-13	1.23E-11	0.00E+00	0.00E+00	1.27E-11	5.78E-15	6.69E-14
S^{+6}	0.00E+00	0.00E+00	0.00E+00	3.67E-28	0.00E+00	0.00E+00	3.67E-28	1.67E-31	1.93E-30
SiO2	1.50E-19	7.50E-20	3.71E-11	4.46E-10	0.00E+00	0.00E+00	4.83E-10	2.19E-13	2.54E-12
SiO_4^{-4}	7.85E-32	6.04E-32	2.99E-23	7.91E-18	0.00E+00	0.00E+00	7.91E-18	3.59E-21	4.18E-20
SO_2	1.21E-52	6.45E-53	3.19E-44	0.00E+00	0.00E+00	0.00E+00	3.19E-44	1.45E-47	1.68E-46
SO_4^{-2}	1.89E-18	1.52E-18	7.50E-10	1.61E-10	0.00E+00	0.00E+00	9.11E-10	4.14E-13	4.79E-12
Sr^{+2}	3.95E-22	2.89E-22	1.43E-13	6.44E-12	0.00E+00	0.00E+00	6.59E-12	2.99E-15	3.47E-14
Sucrose	0.00E+00	0.00E+00	0.00E+00	0.00E+00	0.00E+00	0.00E+00	0.00E+00	0.00E+00	0.00E+00
Ti^{+4}	1.23E-21	4.93E-22	2.44E-13	2.73E-12	0.00E+00	0.00E+00	2.98E-12	1.35E-15	1.57E-14
Zn^{+2}	4.61E-21	2.52E-21	1.25E-12	2.00E-11	0.00E+00	0.00E+00	2.13E-11	9.68E-15	1.12E-13
Zr^{+4}	3.40E-21	2.59E-21	1.28E-12	4.48E-10	0.00E+00	0.00E+00	4.49E-10	2.04E-13	2.36E-12

Components	Aqueous Comp			Solid Comp	Gaseous		Total Comp		
Unit	mol/L	Lb/gal	Lb/day	Lb/day	mol/L	Lb/day	Lb/day	Mt/day	g/sec
Total	7.82E-19	5.75E-19	2.84E-10	2.24E-09	0.00E+00	0.00E+00	2.52E-09	1.15E-12	1.33E-11
$C_2O_4^{-2}$	7.82E-19	5.75E-19	2.84E-10	2.24E-09	0.00E+00	0.00E+00	2.52E-09	1.15E-12	1.33E-11
Formate	3.47E-31	1.30E-31	6.44E-23	3.08E-19	0.00E+00	0.00E+00	3.08E-19	1.40E-22	1.62E-21
Acetate	2.69E-31	1.32E-31	6.55E-23	3.13E-19	0.00E+00	0.00E+00	3.13E-19	1.42E-22	1.65E-21
Glycolate	1.79E-30	1.12E-30	5.54E-22	1.54E-19	0.00E+00	0.00E+00	1.54E-19	7.02E-23	8.13E-22
IDA	9.15E-31	1.02E-30	5.03E-22	3.93E-19	0.00E+00	0.00E+00	3.93E-19	1.79E-22	2.07E-21
Citrate	8.36E-32	1.34E-31	6.64E-23	3.37E-19	0.00E+00	0.00E+00	3.37E-19	1.53E-22	1.77E-21
HEDTA	3.92E-31	9.10E-31	4.50E-22	2.76E-19	0.00E+00	0.00E+00	2.77E-19	1.26E-22	1.46E-21
EDTA	4.71E-32	1.15E-31	5.68E-23	2.97E-19	0.00E+00	0.00E+00	2.97E-19	1.35E-22	1.56E-21

Rad. Comp	Aqueous Rad. Comp			Solids Rad. Comp (1)			Total Rad. Comp (1)		
Unit	Ci/L	Ci/day	Lb/day	Ci/L	Ci/day	Lb/day	Ci/L	Ci/day	Lb/day
Total	2.35E-15	4.39E-06	2.20E-07	3.35E-15	6.28E-06	1.45E-07	5.70E-15	1.07E-05	3.65E-07
^{241}Am	1.51E-20	2.82E-11	1.81E-14	1.64E-18	3.08E-09	1.98E-12	1.66E-18	3.10E-09	2.00E-12
^{243}Am	9.84E-24	1.84E-14	2.04E-16	1.33E-22	2.49E-13	2.75E-15	1.43E-22	2.67E-13	2.95E-15
^{14}C	3.08E-16	5.76E-07	2.85E-10	1.16E-16	2.17E-07	1.07E-10	4.24E-16	7.93E-07	3.92E-10
^{60}Co	2.02E-21	3.78E-12	7.37E-18	1.81E-19	3.40E-10	6.62E-16	1.83E-19	3.44E-10	6.69E-16
^{243}Cm	1.62E-24	3.04E-15	1.33E-19	2.30E-21	4.30E-12	1.88E-16	2.30E-21	4.30E-12	1.88E-16
^{244}Cm	3.84E-23	7.20E-14	1.96E-18	5.22E-20	9.77E-11	2.66E-15	5.22E-20	9.78E-11	2.66E-15
^{137}Cs	1.38E-16	2.59E-07	6.58E-12	3.72E-17	6.96E-08	1.77E-12	1.75E-16	3.29E-07	8.34E-12
^{152}Eu	1.13E-22	2.12E-13	2.69E-18	8.73E-21	1.64E-11	2.07E-16	8.84E-21	1.66E-11	2.10E-16
^{154}Eu	2.35E-20	4.40E-11	3.59E-16	9.46E-19	1.77E-09	1.45E-14	9.69E-19	1.82E-09	1.48E-14
^{155}Eu	6.79E-21	1.27E-11	5.77E-17	1.40E-19	2.62E-10	1.19E-15	1.47E-19	2.75E-10	1.25E-15
^{3}H	1.88E-15	3.53E-06	8.10E-13	3.00E-15	5.63E-06	1.29E-12	4.89E-15	9.16E-06	2.10E-12
^{129}I	9.38E-18	1.76E-08	2.19E-07	6.05E-18	1.13E-08	1.42E-07	1.54E-17	2.89E-08	3.61E-07
^{63}Ni	3.64E-20	6.81E-11	2.64E-15	3.15E-20	5.90E-11	2.29E-15	6.79E-20	1.27E-10	4.93E-15
^{237}Np	1.19E-23	2.23E-14	6.99E-14	1.34E-21	2.52E-12	7.87E-12	1.36E-21	2.54E-12	7.94E-12
^{238}Pu	6.74E-23	1.26E-13	1.62E-17	6.38E-21	1.19E-11	1.54E-15	6.44E-21	1.21E-11	1.55E-15
^{239}Pu	9.32E-22	1.75E-12	6.20E-14	5.65E-20	1.06E-10	3.76E-12	5.74E-20	1.08E-10	3.82E-12
^{240}Pu	2.41E-22	4.52E-13	4.39E-15	1.49E-20	2.79E-11	2.71E-13	1.51E-20	2.84E-11	2.76E-13
^{241}Pu	5.07E-21	9.49E-12	2.03E-16	4.00E-19	7.49E-10	1.60E-14	4.05E-19	7.59E-10	1.62E-14
^{242}Pu	2.56E-26	4.79E-17	2.68E-17	1.37E-24	2.57E-15	1.44E-15	1.40E-24	2.62E-15	1.47E-15
^{125}Sb	1.40E-20	2.62E-11	5.58E-17	5.80E-19	1.09E-09	2.31E-15	5.94E-19	1.11E-09	2.37E-15
^{151}Sm	1.97E-19	3.69E-10	3.09E-14	7.02E-18	1.32E-08	1.10E-12	7.22E-18	1.35E-08	1.13E-12
^{126}Sn	2.23E-22	4.17E-13	8.10E-14	2.72E-21	5.09E-12	9.88E-13	2.94E-21	5.51E-12	1.07E-12
^{90}Sr	4.81E-18	9.00E-09	1.44E-13	1.80E-16	3.36E-07	5.37E-12	1.84E-16	3.45E-07	5.51E-12
^{99}Tc	3.87E-20	7.26E-11	9.44E-12	4.17E-19	7.81E-10	1.02E-10	4.56E-19	8.54E-10	1.11E-10
^{232}Th	3.62E-25	6.78E-16	1.36E-11	4.45E-23	8.33E-14	1.67E-09	4.48E-23	8.40E-14	1.68E-09
^{233}U	1.21E-23	2.26E-14	5.17E-15	3.64E-21	6.82E-12	1.56E-12	3.65E-21	6.84E-12	1.56E-12
^{234}U	8.57E-24	1.61E-14	5.70E-15	1.89E-22	3.54E-13	1.26E-13	1.98E-22	3.71E-13	1.32E-13
^{235}U	3.38E-25	6.32E-16	6.45E-13	4.55E-24	8.52E-15	8.69E-12	4.88E-24	9.15E-15	9.34E-12
^{236}U	5.78E-25	1.08E-15	3.69E-14	6.25E-24	1.17E-14	3.99E-13	6.83E-24	1.28E-14	4.38E-13
^{238}U	6.69E-24	1.25E-14	8.22E-11	1.07E-22	2.01E-13	1.32E-09	1.14E-22	2.13E-13	1.40E-09

(1) All radionuclides in gaseous streams are assumed to exist as solid particulate.

CAS Comp	Organic Components				
Unit	mol/L	Lb/gal	Lb/day	Mt/day	g/sec
Total	9.11E-12	5.20E-12	2.57E-03	1.17E-06	1.35E-05
50-32-8	8.64E-21	1.82E-20	9.00E-12	4.09E-15	4.73E-14
56-23-5	4.96E-16	6.37E-16	3.15E-07	1.43E-10	1.66E-09
57-14-7	2.63E-14	1.32E-14	6.54E-06	2.97E-09	3.44E-08
58-90-2	7.06E-15	1.37E-14	6.76E-06	3.07E-09	3.56E-08
59-89-2	1.00E-14	9.70E-15	4.80E-06	2.18E-09	2.53E-08
60-35-5	8.79E-15	4.33E-15	2.14E-06	9.75E-10	1.13E-08
62-75-9	2.77E-14	1.72E-14	8.49E-06	3.86E-09	4.47E-08
64-19-7	6.99E-12	3.50E-12	1.73E-03	7.88E-07	9.12E-06
71-43-2	9.78E-16	6.37E-16	3.15E-07	1.43E-10	1.66E-09
75-05-8	5.92E-15	2.03E-15	1.00E-06	4.56E-10	5.28E-09
75-12-7	6.95E-14	2.61E-14	1.29E-05	5.88E-09	6.80E-08
76-15-3	1.23E-15	1.59E-15	7.87E-07	3.58E-10	4.14E-09
79-01-6	1.45E-15	1.59E-15	7.88E-07	3.58E-10	4.15E-09
83-32-9	7.53E-15	9.69E-15	4.80E-06	2.18E-09	2.52E-08
84-66-2	1.13E-14	2.10E-14	1.04E-05	4.72E-09	5.46E-08
84-74-2	8.15E-21	1.89E-20	9.37E-12	4.26E-15	4.93E-14
87-68-3	7.31E-16	1.59E-15	7.87E-07	3.58E-10	4.14E-09
88-89-1	1.37E-14	2.62E-14	1.30E-05	5.89E-09	6.82E-08
91-20-3	3.10E-16	3.32E-16	1.64E-07	7.46E-11	8.63E-10
95-50-1	5.27E-16	6.46E-16	3.20E-07	1.45E-10	1.68E-09
98-86-2	8.91E-15	8.96E-15	4.44E-06	2.02E-09	2.33E-08
100-21-0	5.27E-14	7.30E-14	3.61E-05	1.64E-08	1.90E-07
101-84-8	1.14E-15	1.62E-15	8.00E-07	3.64E-10	4.21E-09
106-93-4	4.17E-16	6.53E-16	3.23E-07	1.47E-10	1.70E-09
106-97-8	3.28E-15	1.59E-15	7.87E-07	3.58E-10	4.14E-09
106-99-0	1.41E-15	6.36E-16	3.15E-07	1.43E-10	1.66E-09
108-87-2	1.94E-15	1.59E-15	7.89E-07	3.58E-10	4.15E-09
108-88-3	8.28E-16	6.37E-16	3.15E-07	1.43E-10	1.66E-09
108-95-2	2.90E-14	2.28E-14	1.13E-05	5.13E-09	5.94E-08
110-54-3	2.21E-15	1.59E-15	7.87E-07	3.58E-10	4.14E-09
110-82-7	2.27E-15	1.59E-15	7.89E-07	3.58E-10	4.15E-09
111-84-2	1.49E-15	1.59E-15	7.88E-07	3.58E-10	4.14E-09
120-12-7	7.85E-15	1.17E-14	5.77E-06	2.62E-09	3.04E-08
120-82-1	1.06E-15	1.61E-15	7.95E-07	3.61E-10	4.18E-09
122-39-4	3.69E-15	5.21E-15	2.58E-06	1.17E-09	1.36E-08
126-73-8	7.66E-15	1.70E-14	8.43E-06	3.83E-09	4.43E-08
127-18-4	4.60E-16	6.36E-16	3.15E-07	1.43E-10	1.66E-09
129-00-0	8.62E-21	1.46E-20	7.20E-12	3.27E-15	3.79E-14
132-64-9	7.41E-15	1.04E-14	5.14E-06	2.34E-09	2.71E-08
144-62-7	1.74E-12	1.31E-12	6.48E-04	2.94E-07	3.41E-06
193-39-5	1.14E-20	2.64E-20	1.30E-11	5.93E-15	6.86E-14
206-44-0	5.75E-15	9.71E-15	4.80E-06	2.18E-09	2.53E-08
208-96-8	8.60E-15	1.09E-14	5.41E-06	2.46E-09	2.85E-08
603-34-9	7.07E-15	1.45E-14	7.16E-06	3.26E-09	3.77E-08
621-64-7	8.93E-15	9.70E-15	4.80E-06	2.18E-09	2.53E-08
1321-64-8	3.87E-15	9.71E-15	4.80E-06	2.18E-09	2.53E-08
1336-36-3	1.96E-22	5.27E-22	2.61E-13	1.19E-16	1.37E-15
3697-24-3	4.80E-15	9.71E-15	4.81E-06	2.18E-09	2.53E-08
4170-30-3	3.86E-15	2.26E-15	1.12E-06	5.08E-10	5.88E-09
10061-01-5	6.89E-16	6.36E-16	3.15E-07	1.44E-10	1.66E-09
26140-60-3	5.05E-15	9.71E-15	4.81E-06	2.19E-09	2.53E-08

Stream Number:	LVP18
Stream Name:	Caustic scrubber offgas discharge to stack
Configuration:	MRQ-05-0049.acmf
Run Date / Time:	12/14/2005 - 1:42:25 PM
Run Data File:	H:\ACM v3.1\MRQ-05-0049\MRQ_05_0049A_Streams.csv

Stream Properties			
Variable	Value	Units	
Density	1.02E-03	g/cm^3	(does not include solid phase)
Enthalpy	-1.40E+07	BTU/hr	
Mass Flow	1.83E+04	Lb/hr	
	4.40E+05	Lb/day	
Volumetric Flow	3.59E+04	GPM	(does not include solid phase)
	4.79E+03	ft^3/min	(does not include solid phase)
Molar Flow	6.70E+02	Lbmol/hr	
Molecular Weight	2.74E+01	Lb/Lbmol	
Pressure	1.02E+03	mbar	
Temperature	5.72E+01	C	
Na Molarity	0.00E+00	mol/L	
pH	-2.41E+00	pH	
Total TRU	1.54E-17	Ci/L	
Total Activity	2.24E-09	Ci/L	

Component	Aqueous Comp			Solid Comp	Gaseous (1)		Total Comp		
Unit	mol/L	Lb/gal	Lb/day	Lb/day	mol/L	Lb/day	Lb/day	mt/day	g/sec
Total	1.68E-14	4.74E-15	1.27E-07	3.71E+00	3.73E-02	4.40E+05	4.40E+05	2.00E+02	2.31E+03
Ag^+	1.45E-21	1.31E-21	6.75E-14	8.62E-10	0.00E+00	0.00E+00	8.62E-10	3.92E-13	4.54E-12
Al^{+3}	1.76E-17	3.96E-18	2.05E-10	4.13E-07	0.00E+00	0.00E+00	4.13E-07	1.88E-10	2.17E-09
As^{+3}	6.40E-21	4.00E-21	2.07E-13	1.43E-08	0.00E+00	0.00E+00	1.43E-08	6.51E-12	7.53E-11
B^{+3}	7.05E-17	6.36E-18	3.28E-10	3.19E-06	0.00E+00	0.00E+00	3.19E-06	1.45E-09	1.68E-08
Ba^{+2}	1.33E-21	1.53E-21	7.90E-14	2.46E-11	0.00E+00	0.00E+00	2.47E-11	1.12E-14	1.30E-13
Bi^{+3}	1.58E-21	2.75E-21	1.42E-13	7.69E-10	0.00E+00	0.00E+00	7.69E-10	3.50E-13	4.05E-12
Ca^{+2}	2.34E-19	7.83E-20	4.04E-12	9.78E-07	0.00E+00	0.00E+00	9.78E-07	4.44E-10	5.14E-09
Cd^{+2}	2.48E-21	2.33E-21	1.20E-13	4.12E-09	0.00E+00	0.00E+00	4.12E-09	1.87E-12	2.17E-11
Ce^{+3}	5.93E-20	6.93E-20	3.58E-12	9.09E-11	0.00E+00	0.00E+00	9.45E-11	4.29E-14	4.97E-13
Cl^-	3.57E-18	1.06E-18	5.46E-11	7.97E-14	0.00E+00	0.00E+00	5.47E-11	2.48E-14	2.88E-13
CO	0.00E+00	0.00E+00	0.00E+00	0.00E+00	3.89E-07	4.70E+00	4.70E+00	2.13E-03	2.47E-02
CO_2	5.77E-17	2.12E-17	1.09E-09	0.00E+00	7.85E-04	1.49E+04	1.49E+04	6.76E+00	7.83E+01
CO_3^{-2}	1.42E-17	7.12E-18	3.68E-10	3.87E-10	0.00E+00	0.00E+00	7.54E-10	3.43E-13	3.97E-12
Cr^{+3}	4.26E-19	1.85E-19	9.54E-12	1.95E-07	0.00E+00	0.00E+00	1.95E-07	8.86E-11	1.03E-09
Cu^{+2}	2.45E-21	1.30E-21	6.72E-14	1.29E-10	0.00E+00	0.00E+00	1.29E-10	5.88E-14	6.81E-13
F^-	1.70E-18	2.69E-19	1.39E-11	1.22E-15	0.00E+00	0.00E+00	1.39E-11	6.31E-15	7.30E-14
Fe^{+3}	7.76E-20	3.82E-20	1.87E-12	2.59E-07	0.00E+00	0.00E+00	2.59E-07	1.18E-10	1.36E-09
H_2O	0.00E+00	0.00E+00	0.00E+00	0.00E+00	6.37E-03	4.94E+04	4.94E+04	2.25E+01	2.60E+02
$H_2O(b)$	0.00E+00	0.00E+00	0.00E+00	0.00E+00	0.00E+00	0.00E+00	0.00E+00	0.00E+00	0.00E+00
H^+	8.08E-30	6.80E-32	3.51E-24	0.00E+00	0.00E+00	0.00E+00	3.51E-24	1.60E-27	1.85E-26
HCL	0.00E+00	0.00E+00	0.00E+00	0.00E+00	2.44E-07	3.83E+00	3.83E+00	1.74E-03	2.02E-02
HCO3-	7.93E-41	4.04E-41	2.09E-33	3.16E-23	0.00E+00	0.00E+00	3.16E-23	1.44E-26	1.66E-25
H2CO3	0.00E+00	0.00E+00	0.00E+00	0.00E+00	0.00E+00	0.00E+00	0.00E+00	0.00E+00	0.00E+00
HF	0.00E+00	0.00E+00	0.00E+00	0.00E+00	3.22E-08	2.77E-01	2.77E-01	1.26E-04	1.46E-03
Hg^{+2}	5.14E-18	8.60E-18	4.44E-10	1.48E-02	0.00E+00	0.00E+00	1.48E-02	6.72E-06	7.77E-05
HNO_3	0.00E+00	0.00E+00	0.00E+00	0.00E+00	0.00E+00	0.00E+00	0.00E+00	0.00E+00	0.00E+00
K^+	6.49E-18	2.12E-18	1.09E-10	1.76E-06	0.00E+00	0.00E+00	1.76E-06	8.02E-10	9.28E-09
La^{+3}	6.81E-22	7.89E-22	4.07E-14	9.94E-13	0.00E+00	0.00E+00	1.03E-12	4.70E-16	5.44E-15
Li^+	3.68E-19	2.13E-20	1.10E-12	5.34E-07	0.00E+00	0.00E+00	5.34E-07	2.43E-10	2.81E-09
Mg^{+2}	2.02E-20	4.10E-21	2.12E-13	8.21E-07	0.00E+00	0.00E+00	8.21E-07	3.73E-10	4.32E-09
Mn^{+3}	2.19E-20	1.01E-20	5.20E-13	3.67E-09	0.00E+00	0.00E+00	3.67E-09	1.67E-12	1.93E-11
MnO_4^-	0.00E+00	0.00E+00	0.00E+00	0.00E+00	0.00E+00	0.00E+00	0.00E+00	0.00E+00	0.00E+00
N_2	8.70E-35	2.03E-35	1.05E-27	0.00E+00	2.35E-02	2.84E+05	2.84E+05	1.29E+02	1.49E+03
Na^+	1.95E-16	3.75E-17	1.94E-09	8.24E-06	0.00E+00	0.00E+00	8.24E-06	3.74E-09	4.33E-08
NH3	1.60E-14	2.28E-15	1.18E-07	0.00E+00	2.70E-06	1.98E+01	1.98E+01	8.99E-03	1.04E-01
NH4+	3.84E-18	2.28E-15	2.99E-11	1.44E-18	0.00E+00	0.00E+00	2.99E-11	1.36E-14	1.57E-13
Ni^{+2}	3.55E-20	1.74E-20	8.98E-13	1.25E-08	0.00E+00	0.00E+00	1.25E-08	5.69E-12	6.59E-11
NO	0.00E+00	0.00E+00	0.00E+00	0.00E+00	1.73E-05	2.23E+02	2.23E+02	1.01E-01	1.17E+00
NO_2	0.00E+00	0.00E+00	0.00E+00	0.00E+00	1.58E-06	3.12E+01	3.12E+01	1.42E-02	1.64E-01
NO_2^-	3.82E-17	1.47E-17	7.58E-10	3.41E-15	0.00E+00	0.00E+00	7.58E-10	3.45E-13	3.99E-12
NO_3^-	6.99E-17	3.61E-17	1.87E-09	2.62E-15	0.00E+00	0.00E+00	1.87E-09	8.49E-13	9.82E-12
O_2	4.61E-37	1.23E-37	6.36E-30	0.00E+00	6.65E-03	9.17E+04	9.17E+04	4.17E+01	4.82E+02
O^-	0.00E+00	0.00E+00	0.00E+00	2.22E+00	0.00E+00	0.00E+00	2.22E+00	1.01E-03	1.17E-02
OH^-	3.88E-17	5.50E-18	2.84E-10	1.04E-14	0.00E+00	0.00E+00	2.84E-10	1.29E-13	1.49E-12
OH(b)	2.81E-16	3.99E-17	2.06E-09	0.00E+00	0.00E+00	0.00E+00	2.06E-09	9.38E-13	1.09E-11
Pb^{+2}	9.01E-21	1.56E-20	8.04E-13	4.02E-09	0.00E+00	0.00E+00	4.02E-09	1.83E-12	2.12E-11
Pd^{+2}	6.97E-22	6.19E-22	3.20E-14	1.19E-12	0.00E+00	0.00E+00	1.22E-12	5.56E-16	6.44E-15
PO_4^{-3}	7.19E-19	5.70E-19	2.94E-11	8.26E-07	0.00E+00	0.00E+00	8.26E-07	3.76E-10	4.35E-09
Resin	0.00E+00	0.00E+00	0.00E+00	0.00E+00	0.00E+00	0.00E+00	0.00E+00	0.00E+00	0.00E+00
Rh^{+3}	6.74E-22	5.79E-22	2.99E-14	1.21E-11	0.00E+00	0.00E+00	1.21E-11	5.52E-15	6.39E-14
Ru^{+3}	1.00E-21	8.45E-22	4.37E-14	3.41E-08	0.00E+00	0.00E+00	3.41E-08	1.55E-11	1.79E-10
S^{+6}	0.00E+00	0.00E+00	0.00E+00	1.48E+00	0.00E+00	0.00E+00	1.48E+00	6.73E-04	7.79E-03
SiO2	1.36E-19	6.80E-20	3.51E-12	2.58E-06	0.00E+00	0.00E+00	2.58E-06	1.17E-09	1.38E-08
SiO_4^{-4}	1.04E-31	7.97E-32	4.12E-24	1.39E-21	0.00E+00	0.00E+00	1.39E-21	6.32E-25	7.31E-24
SO_2	0.00E+00	0.00E+00	0.00E+00	0.00E+00	1.61E-08	4.44E-01	4.44E-01	2.02E-04	2.34E-03
SO_4^{-2}	1.72E-18	1.38E-18	7.11E-11	1.33E-12	0.00E+00	0.00E+00	7.24E-11	3.29E-14	3.81E-13
Sr^{+2}	3.66E-22	2.67E-22	1.38E-14	1.05E-11	0.00E+00	0.00E+00	1.05E-11	4.79E-15	5.54E-14
Sucrose	0.00E+00	0.00E+00	0.00E+00	0.00E+00	0.00E+00	0.00E+00	0.00E+00	0.00E+00	0.00E+00
Ti^{+4}	1.12E-21	4.47E-22	2.31E-14	2.87E-10	0.00E+00	0.00E+00	2.87E-10	1.31E-13	1.51E-12
Zn^{+2}	4.18E-21	2.28E-21	1.18E-13	6.95E-07	0.00E+00	0.00E+00	6.95E-07	3.16E-10	3.65E-09
Zr^{+4}	3.09E-21	2.35E-21	1.21E-13	2.49E-07	0.00E+00	0.00E+00	2.49E-07	1.13E-10	1.31E-09

Components	Aqueous Comp			Solid Comp	Gaseous		Total Comp		
Unit	mol/L	Lb/gal	Lb/day	Lb/day	mol/L	Lb/day	Lb/day	Mt/day	g/sec
Total	3.24E-20	2.38E-20	1.23E-12	6.07E-07	0.00E+00	0.00E+00	6.07E-07	2.76E-10	3.19E-09
$C_2O_4^{-2}$	3.24E-20	2.38E-20	1.23E-12	6.07E-07	0.00E+00	0.00E+00	6.07E-07	2.76E-10	3.19E-09
Formate	4.08E-27	1.53E-27	7.91E-20	2.40E-12	0.00E+00	0.00E+00	2.40E-12	1.09E-15	1.26E-14
Acetate	3.16E-27	1.56E-27	8.04E-20	2.44E-12	0.00E+00	0.00E+00	2.44E-12	1.11E-15	1.28E-14
Glycolate	2.10E-26	1.32E-26	6.80E-19	2.06E-11	0.00E+00	0.00E+00	2.06E-11	9.37E-15	1.08E-13
IDA	1.11E-26	1.24E-26	6.39E-19	1.94E-11	0.00E+00	0.00E+00	1.94E-11	8.81E-15	1.02E-13
Citrate	1.02E-27	1.63E-27	8.44E-20	2.56E-12	0.00E+00	0.00E+00	2.56E-12	1.16E-15	1.34E-14
HEDTA	9.54E-26	2.22E-25	1.14E-17	3.47E-10	0.00E+00	0.00E+00	3.47E-10	1.58E-13	1.82E-12
EDTA	1.15E-26	2.80E-26	1.44E-18	4.38E-11	0.00E+00	0.00E+00	4.38E-11	1.99E-14	2.30E-13

Rad. Comp	Aqueous Rad. Comp			Solids Rad. Comp (1)			Total Rad. Comp (1)		
Unit	Ci/L	Ci/day	Lb/day	Ci/L	Ci/day	Lb/day	Ci/L	Ci/day	Lb/day
Total	1.01E-16	1.98E-08	5.32E-11	2.24E-09	4.39E-01	1.30E-03	2.24E-09	4.39E-01	1.30E-03
^{241}Am	1.37E-20	2.67E-12	1.72E-15	1.32E-17	2.58E-09	1.66E-12	1.32E-17	2.58E-09	1.66E-12
^{243}Am	8.94E-24	1.75E-15	1.93E-17	8.58E-21	1.68E-12	1.85E-14	8.58E-21	1.68E-12	1.85E-14
^{14}C	5.58E-17	1.09E-08	5.39E-12	1.86E-09	3.64E-01	1.80E-04	1.86E-09	3.64E-01	1.80E-04
^{60}Co	1.83E-21	3.58E-13	6.98E-19	4.82E-18	9.41E-10	1.83E-15	4.82E-18	9.42E-10	1.84E-15
^{243}Cm	1.47E-24	2.88E-16	1.26E-20	6.01E-22	1.18E-13	5.13E-18	6.03E-22	1.18E-13	5.14E-18
^{244}Cm	3.49E-23	6.82E-15	1.86E-19	1.42E-20	2.77E-12	7.56E-17	1.42E-20	2.78E-12	7.58E-17
^{137}Cs	2.96E-21	5.78E-13	1.47E-17	2.12E-15	4.14E-07	1.05E-11	2.12E-15	4.14E-07	1.05E-11
^{152}Eu	1.03E-22	2.01E-14	2.55E-19	3.93E-20	7.69E-12	9.75E-17	3.94E-20	7.71E-12	9.78E-17
^{154}Eu	2.13E-20	4.17E-12	3.40E-17	8.14E-18	1.59E-09	1.30E-14	8.16E-18	1.59E-09	1.30E-14
^{155}Eu	6.17E-21	1.21E-12	5.47E-18	2.35E-18	4.60E-10	2.09E-15	2.36E-18	4.61E-10	2.09E-15
^{3}H	4.06E-17	7.93E-09	1.82E-15	3.82E-10	7.47E-02	1.71E-08	3.82E-10	7.47E-02	1.71E-08
^{129}I	1.55E-20	3.02E-12	3.77E-11	4.60E-13	8.99E-05	1.12E-03	4.60E-13	8.99E-05	1.12E-03
^{63}Ni	3.30E-20	6.46E-12	2.51E-16	1.56E-16	3.06E-08	1.19E-12	1.56E-16	3.06E-08	1.19E-12
^{237}Np	1.08E-23	2.11E-15	6.61E-15	4.14E-21	8.10E-13	2.53E-12	4.15E-21	8.12E-13	2.54E-12
^{238}Pu	6.12E-23	1.20E-14	1.54E-18	2.34E-20	4.58E-12	5.89E-16	2.35E-20	4.59E-12	5.91E-16
^{239}Pu	8.46E-22	1.65E-13	5.88E-15	3.23E-19	6.32E-11	2.24E-12	3.24E-19	6.33E-11	2.25E-12
^{240}Pu	2.19E-22	4.29E-14	4.16E-16	8.38E-20	1.64E-11	1.59E-13	8.40E-20	1.64E-11	1.59E-13
^{241}Pu	4.60E-21	9.00E-13	1.93E-17	1.76E-18	3.44E-10	7.36E-15	1.76E-18	3.45E-10	7.38E-15
^{242}Pu	2.32E-26	4.54E-18	2.54E-18	8.86E-24	1.73E-15	9.70E-16	8.89E-24	1.74E-15	9.73E-16
^{125}Sb	1.27E-20	2.49E-12	5.28E-18	1.21E-16	2.37E-08	5.03E-14	1.21E-16	2.37E-08	5.03E-14
^{151}Sm	1.79E-19	3.49E-11	2.93E-15	1.19E-18	2.34E-10	1.96E-14	1.37E-18	2.69E-10	2.25E-14
^{126}Sn	2.02E-22	3.96E-14	7.68E-15	7.71E-20	1.51E-11	2.93E-12	7.73E-20	1.51E-11	2.93E-12
^{90}Sr	4.44E-18	8.68E-10	1.39E-14	3.38E-15	6.61E-07	1.06E-11	3.39E-15	6.62E-07	1.06E-11
^{99}Tc	3.51E-20	6.87E-12	8.94E-13	8.81E-15	1.72E-06	2.24E-07	8.81E-15	1.72E-06	2.24E-07
^{232}Th	3.29E-25	6.42E-17	1.29E-12	1.50E-23	2.93E-15	5.87E-11	1.53E-23	3.00E-15	6.00E-11
^{233}U	1.10E-23	2.14E-15	4.90E-16	4.23E-21	8.27E-13	1.89E-13	4.24E-21	8.30E-13	1.90E-13
^{234}U	7.77E-24	1.52E-15	5.40E-16	2.96E-21	5.79E-13	2.06E-13	2.97E-21	5.81E-13	2.06E-13
^{235}U	3.06E-25	5.99E-17	6.11E-14	1.17E-22	2.28E-14	2.33E-11	1.17E-22	2.29E-14	2.33E-11
^{236}U	5.25E-25	1.03E-16	3.50E-15	2.00E-22	3.91E-14	1.33E-12	2.00E-22	3.92E-14	1.34E-12
^{238}U	6.07E-24	1.19E-15	7.79E-12	2.31E-21	4.52E-13	2.97E-09	2.32E-21	4.53E-13	2.97E-09

(1) All radionuclides in gaseous streams are assumed to exist as solid particulate.

CAS Comp	Organic Components				
Unit	mol/L	Lb/gal	Lb/day	Mt/day	g/sec
Total	4.80E-07	3.61E-07	1.86E+01	8.47E-03	9.81E-02
50-32-8	4.97E-17	1.05E-16	5.41E-09	2.46E-12	2.85E-11
56-23-5	0.00E+00	0.00E+00	0.00E+00	0.00E+00	0.00E+00
57-14-7	2.85E-11	1.43E-11	7.39E-04	3.36E-07	3.89E-06
58-90-2	1.58E-11	3.05E-11	1.58E-03	7.17E-07	8.30E-06
59-89-2	2.71E-17	2.63E-17	1.36E-09	6.17E-13	7.14E-12
60-35-5	2.21E-09	1.09E-09	5.64E-02	2.56E-05	2.97E-04
62-75-9	8.98E-10	5.55E-10	2.87E-02	1.30E-05	1.51E-04
64-19-7	1.89E-14	9.47E-15	4.89E-07	2.22E-10	2.57E-09
71-43-2	0.00E+00	0.00E+00	0.00E+00	0.00E+00	0.00E+00
75-05-8	5.33E-13	1.83E-13	9.44E-06	4.29E-09	4.96E-08
75-12-7	1.79E-08	6.71E-09	3.47E-01	1.58E-04	1.82E-03
76-15-3	0.00E+00	0.00E+00	0.00E+00	0.00E+00	0.00E+00
79-01-6	0.00E+00	0.00E+00	0.00E+00	0.00E+00	0.00E+00
83-32-9	3.22E-18	4.15E-18	2.14E-10	9.74E-14	1.13E-12
84-66-2	1.12E-09	2.07E-09	1.07E-01	4.86E-05	5.62E-04
84-74-2	2.11E-17	4.91E-17	2.53E-09	1.15E-12	1.33E-11
87-68-3	0.00E+00	0.00E+00	0.00E+00	0.00E+00	0.00E+00
88-89-1	3.53E-09	6.75E-09	3.49E-01	1.58E-04	1.83E-03
91-20-3	1.99E-18	2.12E-18	1.10E-10	4.99E-14	5.77E-13
95-50-1	1.47E-20	1.80E-20	9.31E-13	4.23E-16	4.90E-15
98-86-2	1.43E-11	1.44E-11	7.42E-04	3.37E-07	3.90E-06
100-21-0	6.87E-16	9.53E-16	4.92E-08	2.24E-11	2.59E-10
101-84-8	3.23E-19	4.59E-19	2.37E-11	1.08E-14	1.25E-13
106-93-4	2.84E-19	4.45E-19	2.30E-11	1.05E-14	1.21E-13
106-97-8	0.00E+00	0.00E+00	0.00E+00	0.00E+00	0.00E+00
106-99-0	0.00E+00	0.00E+00	0.00E+00	0.00E+00	0.00E+00
108-87-2	0.00E+00	0.00E+00	0.00E+00	0.00E+00	0.00E+00
108-88-3	0.00E+00	0.00E+00	0.00E+00	0.00E+00	0.00E+00
108-95-2	4.19E-09	3.29E-09	1.70E-01	7.72E-05	8.93E-04
110-54-3	0.00E+00	0.00E+00	0.00E+00	0.00E+00	0.00E+00
110-82-7	0.00E+00	0.00E+00	0.00E+00	0.00E+00	0.00E+00
111-84-2	0.00E+00	0.00E+00	0.00E+00	0.00E+00	0.00E+00
120-12-7	2.05E-19	3.04E-19	1.57E-11	7.14E-15	8.27E-14
120-82-1	6.20E-21	9.39E-21	4.85E-13	2.20E-16	2.55E-15
122-39-4	5.47E-18	7.72E-18	3.99E-10	1.81E-13	2.10E-12
126-73-8	1.50E-09	3.32E-09	1.72E-01	7.81E-05	9.03E-04
127-18-4	0.00E+00	0.00E+00	0.00E+00	0.00E+00	0.00E+00
129-00-0	3.62E-18	6.11E-18	3.16E-10	1.44E-13	1.66E-12
132-64-9	1.39E-15	1.95E-15	1.01E-07	4.57E-11	5.29E-10
144-62-7	4.49E-07	3.37E-07	1.74E+01	7.91E-03	9.16E-02
193-39-5	2.01E-21	4.63E-21	2.39E-13	1.09E-16	1.26E-15
206-44-0	1.27E-17	2.15E-17	1.11E-09	5.05E-13	5.85E-12
208-96-8	1.88E-14	2.39E-14	1.23E-06	5.60E-10	6.48E-09
603-34-9	4.09E-11	8.38E-11	4.33E-03	1.97E-06	2.28E-05
621-64-7	2.13E-17	2.32E-17	1.20E-09	5.44E-13	6.29E-12
1321-64-8	1.86E-18	4.66E-18	2.41E-10	1.09E-13	1.27E-12
1336-36-3	5.03E-23	1.35E-22	6.98E-15	3.17E-18	3.67E-17
3697-24-3	1.14E-17	2.31E-17	1.19E-09	5.43E-13	6.28E-12
4170-30-3	7.14E-12	4.18E-12	2.16E-04	9.81E-08	1.14E-06
10061-01-5	3.48E-23	3.22E-23	1.66E-15	7.56E-19	8.75E-18
26140-60-3	7.55E-18	1.45E-17	7.49E-10	3.41E-13	3.94E-12

Stream Number:	HCP31
Stream Name:	Stack extraction fan discharge to stack
Configuration:	MRQ-05-0049.acmf
Run Date / Time:	12/14/2005 - 1:42:25 PM
Run Data File:	H:\ACM v3.1\MRQ-05-0049\MRQ_05_0049A_Streams.csv

Stream Properties			
Variable	Value	Units	
Density	7.88E-04	g/cm^3	(does not include solid phase)
Enthalpy	-3.70E+06	BTU/hr	
Mass Flow	1.19E+04	Lb/hr	
	2.85E+05	Lb/day	
Volumetric Flow	3.01E+04	GPM	(does not include solid phase)
	4.02E+03	ft^3/min	(does not include solid phase)
Molar Flow	4.26E+02	Lbmol/hr	
Molecular Weight	2.79E+01	Lb/Lbmol	
Pressure	9.86E+02	mbar	
Temperature	1.46E+02	C	
Na Molarity	0.00E+00	mol/L	
pH	-3.18E+00	pH	
Total TRU	1.45E-17	Ci/L	
Total Activity	5.58E-09	Ci/L	

Component	Aqueous Comp			Solid Comp	Gaseous (1)		Total Comp		
Unit	mol/L	Lb/gal	Lb/day	Lb/day	mol/L	Lb/day	Lb/day	mt/day	g/sec
Total	6.89E-14	1.83E-14	5.57E-07	2.99E+00	2.83E-02	2.85E+05	2.85E+05	1.29E+02	1.50E+03
Ag^+	2.97E-24	2.67E-24	1.16E-16	6.73E-11	0.00E+00	0.00E+00	6.73E-11	3.06E-14	3.54E-13
Al^{+3}	3.99E-20	8.98E-21	3.89E-13	8.09E-10	0.00E+00	0.00E+00	8.10E-10	3.68E-13	4.26E-12
As^{+3}	1.45E-23	9.09E-24	3.93E-16	7.39E-12	0.00E+00	0.00E+00	7.39E-12	3.36E-15	3.89E-14
B^{+3}	2.23E-20	2.01E-21	8.72E-14	1.90E-09	0.00E+00	0.00E+00	1.90E-09	8.65E-13	1.00E-11
Ba^{+2}	3.03E-24	3.47E-24	1.50E-16	6.29E-12	0.00E+00	0.00E+00	6.29E-12	2.86E-15	3.31E-14
Bi^{+3}	3.21E-24	5.59E-24	2.42E-16	1.88E-10	0.00E+00	0.00E+00	1.88E-10	8.53E-14	9.87E-13
Ca^{+2}	2.17E-22	7.27E-23	3.14E-15	6.76E-11	0.00E+00	0.00E+00	6.76E-11	3.07E-14	3.55E-13
Cd^{+2}	4.59E-24	4.31E-24	1.86E-16	4.64E-10	0.00E+00	0.00E+00	4.64E-10	2.11E-13	2.44E-12
Ce^{+3}	4.93E-20	5.77E-20	2.50E-12	8.33E-14	0.00E+00	0.00E+00	2.58E-12	1.17E-15	1.36E-14
Cl^-	1.09E-19	3.23E-20	1.40E-12	3.92E-14	0.00E+00	0.00E+00	1.44E-12	6.54E-16	7.56E-15
CO	6.50E-112	1.52E-112	6.57E-105	0.00E+00	2.79E-08	2.82E-01	2.82E-01	1.28E-04	1.49E-03
CO_2	0.00E+00	0.00E+00	0.00E+00	0.00E+00	5.63E-05	8.95E+02	8.95E+02	4.07E-01	4.71E+00
CO_3^{-2}	5.87E-21	2.94E-21	1.27E-13	2.23E-12	0.00E+00	0.00E+00	2.36E-12	1.07E-15	1.24E-14
Cr^{+3}	1.93E-20	8.37E-21	3.62E-13	1.47E-10	0.00E+00	0.00E+00	1.48E-10	6.71E-14	7.76E-13
Cu^{+2}	5.02E-24	2.66E-24	1.15E-16	4.68E-12	0.00E+00	0.00E+00	4.68E-12	2.13E-15	2.46E-14
F^-	4.29E-21	6.80E-22	2.94E-14	7.92E-13	0.00E+00	0.00E+00	8.21E-13	3.73E-16	4.32E-15
Fe^{+3}	6.40E-20	2.98E-20	1.29E-12	6.17E-10	0.00E+00	0.00E+00	6.18E-10	2.81E-13	3.25E-12
H_2O	0.00E+00	0.00E+00	0.00E+00	0.00E+00	2.69E-03	1.75E+04	1.75E+04	7.96E+00	9.21E+01
$H_2O(b)$	0.00E+00	0.00E+00	0.00E+00	0.00E+00	0.00E+00	0.00E+00	0.00E+00	0.00E+00	0.00E+00
H^+	1.93E-21	1.62E-23	7.02E-16	0.00E+00	0.00E+00	0.00E+00	7.02E-16	3.19E-19	3.69E-18
HCL	0.00E+00	0.00E+00	0.00E+00	0.00E+00	3.75E-10	4.94E-03	4.94E-03	2.25E-06	2.60E-05
HCO3-	5.53E-22	2.82E-22	1.22E-14	4.03E-29	0.00E+00	0.00E+00	1.22E-14	5.54E-18	6.41E-17
H2CO3	0.00E+00	0.00E+00	0.00E+00	0.00E+00	0.00E+00	0.00E+00	0.00E+00	0.00E+00	0.00E+00
HF	0.00E+00	0.00E+00	0.00E+00	0.00E+00	5.85E-10	4.23E-03	4.23E-03	1.92E-06	2.22E-05
Hg^{+2}	1.05E-19	1.76E-19	7.61E-12	2.03E-03	0.00E+00	0.00E+00	2.03E-03	9.20E-07	1.07E-05
HNO_3	0.00E+00	0.00E+00	0.00E+00	0.00E+00	0.00E+00	0.00E+00	0.00E+00	0.00E+00	0.00E+00
K^+	1.36E-20	4.45E-21	1.92E-13	7.17E-10	0.00E+00	0.00E+00	7.17E-10	3.26E-13	3.77E-12
La^{+3}	3.03E-25	3.51E-25	1.52E-17	1.09E-13	0.00E+00	0.00E+00	1.09E-13	4.94E-17	5.72E-16
Li^+	2.47E-22	1.43E-23	6.20E-16	8.36E-10	0.00E+00	0.00E+00	8.36E-10	3.80E-13	4.40E-12
Mg^{+2}	4.60E-23	9.32E-24	4.03E-16	2.17E-11	0.00E+00	0.00E+00	2.17E-11	9.68E-15	1.14E-13
Mn^{+3}	4.99E-23	2.29E-23	9.89E-16	1.18E-10	0.00E+00	0.00E+00	1.18E-10	5.35E-14	6.19E-13
MnO_4^-	0.00E+00	0.00E+00	0.00E+00	0.00E+00	0.00E+00	0.00E+00	0.00E+00	0.00E+00	0.00E+00
N_2	2.33E-14	5.45E-15	2.36E-07	0.00E+00	2.01E-02	2.03E+05	2.03E+05	9.24E+01	1.07E+03
Na^+	1.56E-17	3.00E-18	1.30E-10	8.08E-09	0.00E+00	0.00E+00	8.20E-09	3.73E-12	4.32E-11
NH3	3.80E-14	5.40E-15	2.34E-07	0.00E+00	2.83E-07	1.74E+00	1.74E+00	7.91E-04	9.15E-03
NH4+	1.52E-20	5.40E-15	9.93E-14	1.54E-23	0.00E+00	0.00E+00	9.93E-14	4.51E-17	5.22E-16
Ni^{+2}	8.72E-21	4.27E-21	1.85E-13	1.13E-10	0.00E+00	0.00E+00	1.13E-10	5.13E-14	5.93E-13
NO	4.09E-37	1.03E-37	4.44E-30	0.00E+00	1.83E-06	1.98E+01	1.98E+01	9.00E-03	1.04E-01
NO_2	5.77E-50	2.22E-50	9.59E-43	0.00E+00	1.71E-07	2.84E+00	2.84E+00	1.29E-03	1.49E-02
NO_2^-	8.66E-20	3.33E-20	1.44E-12	2.21E-12	0.00E+00	0.00E+00	3.65E-12	1.66E-15	1.92E-14
NO_3^-	1.16E-17	6.00E-18	2.60E-10	1.70E-12	0.00E+00	0.00E+00	2.61E-10	1.19E-13	1.37E-12
O_2	7.52E-15	2.01E-15	8.69E-08	0.00E+00	5.43E-03	6.28E+04	6.28E+04	2.85E+01	3.30E+02
$O^=$	0.00E+00	0.00E+00	0.00E+00	1.79E+00	0.00E+00	0.00E+00	1.79E+00	8.15E-04	9.43E-03
OH^-	6.63E-18	9.42E-19	4.07E-11	3.49E-11	0.00E+00	0.00E+00	7.56E-11	3.44E-14	3.98E-13
$OH(b)^-$	8.84E-20	1.25E-20	5.43E-13	2.20E-33	0.00E+00	0.00E+00	5.43E-13	2.47E-16	2.85E-15
Pb^{+2}	1.83E-23	3.17E-23	1.37E-15	2.10E-10	0.00E+00	0.00E+00	2.10E-10	9.56E-14	1.11E-12
Pd^{+2}	3.02E-25	2.68E-25	1.16E-17	6.89E-15	0.00E+00	0.00E+00	6.90E-15	3.14E-18	3.63E-17
PO_4^{-3}	1.63E-21	1.29E-21	5.60E-14	4.97E-10	0.00E+00	0.00E+00	4.97E-10	2.26E-13	2.61E-12
Resin	0.00E+00	0.00E+00	0.00E+00	0.00E+00	0.00E+00	0.00E+00	0.00E+00	0.00E+00	0.00E+00
Rh^{+3}	2.74E-25	2.36E-25	1.02E-17	3.19E-14	0.00E+00	0.00E+00	3.19E-14	1.45E-17	1.68E-16
Ru^{+3}	2.26E-24	1.91E-24	8.27E-17	6.68E-10	0.00E+00	0.00E+00	6.68E-10	3.04E-13	3.52E-12
S^{+6}	0.00E+00	0.00E+00	0.00E+00	1.20E+00	0.00E+00	0.00E+00	1.20E+00	5.43E-04	6.29E-03
SiO2	3.08E-22	1.55E-22	6.69E-15	4.68E-09	0.00E+00	0.00E+00	4.68E-09	2.13E-12	2.46E-11
SiO_4^{-4}	2.36E-34	1.81E-34	7.84E-27	1.55E-18	0.00E+00	0.00E+00	1.55E-18	7.03E-22	8.14E-21
SO_2	6.22E-53	3.32E-53	1.44E-45	0.00E+00	5.16E-07	1.19E+01	1.19E+01	5.43E-03	6.28E-02
SO_4^{-2}	3.89E-21	3.12E-21	1.35E-13	5.10E-13	0.00E+00	0.00E+00	6.45E-13	2.93E-16	3.39E-15
Sr^{+2}	1.02E-24	7.47E-25	3.23E-17	2.30E-12	0.00E+00	0.00E+00	2.30E-12	1.05E-15	1.21E-14
Sucrose	0.00E+00	0.00E+00	0.00E+00	0.00E+00	0.00E+00	0.00E+00	0.00E+00	0.00E+00	0.00E+00
Tl^{+4}	4.58E-25	1.83E-25	7.91E-18	6.27E-15	0.00E+00	0.00E+00	6.28E-15	2.85E-18	3.30E-17
Zn^{+2}	9.51E-24	5.19E-24	2.24E-16	3.89E-10	0.00E+00	0.00E+00	3.89E-10	1.77E-13	2.05E-12
Zr^{+4}	7.01E-24	5.34E-24	2.31E-16	1.44E-10	0.00E+00	0.00E+00	1.44E-10	6.54E-14	7.57E-13

Components	Aqueous Comp			Solid Comp	Gaseous		Total Comp		
Unit	mol/L	Lb/gal	Lb/day	Lb/day	mol/L	Lb/day	Lb/day	Mt/day	g/sec
Total	2.05E-17	1.51E-17	6.53E-10	6.66E-04	0.00E+00	0.00E+00	6.66E-04	3.03E-07	3.50E-06
$C_2O_4^{-2}$	2.05E-17	1.51E-17	6.53E-10	6.65E-04	0.00E+00	0.00E+00	6.65E-04	3.02E-07	3.50E-06
Formate	1.31E-27	4.94E-28	2.14E-20	4.58E-09	0.00E+00	0.00E+00	4.58E-09	2.08E-12	2.41E-11
Acetate	1.02E-27	5.02E-28	2.17E-20	4.66E-09	0.00E+00	0.00E+00	4.66E-09	2.12E-12	2.45E-11
Glycolate	6.78E-27	4.25E-27	1.84E-19	2.29E-09	0.00E+00	0.00E+00	2.29E-09	1.04E-12	1.20E-11
IDA	6.35E-26	7.06E-26	3.05E-18	1.17E-07	0.00E+00	0.00E+00	1.17E-07	5.31E-11	6.15E-10
Citrate	2.90E-28	4.65E-28	2.01E-20	5.02E-09	0.00E+00	0.00E+00	5.02E-09	2.28E-12	2.64E-11
HEDTA	1.36E-27	3.16E-27	1.37E-19	4.11E-09	0.00E+00	0.00E+00	4.11E-09	1.87E-12	2.16E-11
EDTA	1.63E-28	3.98E-28	1.72E-20	4.42E-09	0.00E+00	0.00E+00	4.42E-09	2.01E-12	2.32E-11

Rad. Comp	Aqueous Rad. Comp			Solids Rad. Comp (1)			Total Rad. Comp (1)		
Unit	Ci/L	Ci/day	Lb/day	Ci/L	Ci/day	Lb/day	Ci/L	Ci/day	Lb/day
Total	2.20E-16	3.60E-08	1.70E-12	5.58E-09	9.15E-01	6.87E-05	5.58E-09	9.15E-01	6.87E-05
^{241}Am	3.09E-23	5.06E-15	3.26E-18	1.15E-17	1.88E-09	1.21E-12	1.15E-17	1.88E-09	1.21E-12
^{243}Am	2.02E-26	3.31E-18	3.65E-20	9.33E-22	1.53E-13	1.69E-15	9.33E-22	1.53E-13	1.69E-15
^{14}C	1.14E-17	1.87E-09	9.23E-13	4.28E-10	7.01E-02	3.46E-05	4.28E-10	7.01E-02	3.46E-05
^{60}Co	3.75E-24	6.14E-16	1.20E-21	6.31E-18	1.03E-09	2.01E-15	6.31E-18	1.03E-09	2.01E-15
^{243}Cm	3.35E-27	5.48E-19	2.39E-23	1.30E-20	2.12E-12	9.26E-17	1.30E-20	2.12E-12	9.26E-17
^{244}Cm	7.92E-26	1.30E-17	3.54E-22	2.95E-19	4.83E-11	1.32E-15	2.95E-19	4.83E-11	1.32E-15
^{137}Cs	8.17E-18	1.34E-09	3.40E-14	2.16E-14	3.54E-06	8.99E-11	2.16E-14	3.54E-06	9.00E-11
^{152}Eu	2.33E-25	3.81E-17	4.83E-22	4.93E-20	8.08E-12	1.03E-16	4.93E-20	8.08E-12	1.03E-16
^{154}Eu	4.82E-23	7.89E-15	6.44E-20	5.35E-18	8.76E-10	7.15E-15	5.35E-18	8.76E-10	7.15E-15
^{155}Eu	1.39E-23	2.28E-15	1.04E-20	7.93E-19	1.30E-10	5.90E-16	7.93E-19	1.30E-10	5.90E-16
^{3}H	2.00E-16	3.28E-08	7.52E-15	5.16E-09	8.45E-01	1.94E-07	5.16E-09	8.45E-01	1.94E-07
^{129}I	3.50E-22	5.73E-14	7.16E-13	1.66E-14	2.72E-06	3.39E-05	1.66E-14	2.72E-06	3.39E-05
^{63}Ni	7.47E-23	1.22E-14	4.75E-19	5.69E-19	9.32E-11	3.62E-15	5.69E-19	9.32E-11	3.62E-15
^{237}Np	2.46E-26	4.02E-18	1.26E-17	7.59E-21	1.24E-12	3.89E-12	7.59E-21	1.24E-12	3.89E-12
^{238}Pu	1.38E-25	2.27E-17	2.92E-21	3.60E-20	5.90E-12	7.60E-16	3.60E-20	5.90E-12	7.60E-16
^{239}Pu	1.91E-24	3.13E-16	1.11E-17	3.19E-19	5.23E-11	1.86E-12	3.19E-19	5.23E-11	1.86E-12
^{240}Pu	4.96E-25	8.12E-17	7.89E-19	8.43E-20	1.38E-11	1.34E-13	8.43E-20	1.38E-11	1.34E-13
^{241}Pu	1.04E-23	1.70E-15	3.65E-20	2.26E-18	3.70E-10	7.93E-15	2.26E-18	3.70E-10	7.93E-15
^{242}Pu	5.25E-29	8.60E-21	4.81E-21	7.76E-24	1.27E-15	7.12E-16	7.76E-24	1.27E-15	7.12E-16
^{125}Sb	2.88E-23	4.72E-15	1.00E-20	2.33E-17	3.82E-09	8.11E-15	2.33E-17	3.82E-09	8.11E-15
^{151}Sm	7.73E-23	1.27E-14	1.06E-18	2.64E-19	4.32E-11	3.62E-15	2.64E-19	4.32E-11	3.62E-15
^{126}Sn	4.58E-25	7.50E-17	1.46E-17	9.30E-21	1.52E-12	2.96E-13	9.30E-21	1.52E-12	2.96E-13
^{90}Sr	1.20E-20	1.97E-12	3.14E-17	7.34E-16	1.20E-07	1.92E-12	7.34E-16	1.20E-07	1.92E-12
^{99}Tc	7.99E-23	1.31E-14	1.70E-15	3.10E-16	5.07E-08	6.59E-09	3.10E-16	5.07E-08	6.59E-09
^{232}Th	1.43E-28	2.34E-20	4.69E-16	2.77E-24	4.53E-16	9.08E-12	2.77E-24	4.53E-16	9.08E-12
^{233}U	2.49E-26	4.08E-18	9.32E-19	2.06E-20	3.37E-12	7.70E-13	2.06E-20	3.37E-12	7.70E-13
^{234}U	1.77E-26	2.89E-18	1.03E-18	1.07E-21	1.76E-13	6.23E-14	1.07E-21	1.76E-13	6.23E-14
^{235}U	6.96E-28	1.14E-19	1.16E-16	2.58E-23	4.22E-15	4.31E-12	2.58E-23	4.22E-15	4.31E-12
^{236}U	1.19E-27	1.95E-19	6.65E-18	3.55E-23	5.81E-15	1.98E-13	3.55E-23	5.81E-15	1.98E-13
^{238}U	1.38E-26	2.26E-18	1.48E-14	6.07E-22	9.94E-14	6.52E-10	6.07E-22	9.94E-14	6.52E-10

(1) All radionuclides in gaseous streams are assumed to exist as solid particulate.

CAS Comp	Organic Components				
Unit	mol/L	Lb/gal	Lb/day	Mt/day	g/sec
Total	3.42E-08	2.57E-08	1.11E+00	5.05E-04	5.85E-03
50-32-8	6.53E-20	1.38E-19	5.95E-12	2.70E-15	3.13E-14
56-23-5	9.73E-28	1.25E-27	5.41E-20	2.46E-23	2.84E-22
57-14-7	1.26E-11	6.34E-12	2.74E-04	1.25E-07	1.44E-06
58-90-2	6.20E-12	1.20E-11	5.19E-04	2.36E-07	2.73E-06
59-89-2	5.58E-17	5.41E-17	2.34E-09	1.06E-12	1.23E-11
60-35-5	1.61E-10	7.94E-11	3.44E-03	1.56E-06	1.81E-05
62-75-9	2.11E-10	1.30E-10	5.64E-03	2.56E-06	2.97E-05
64-19-7	3.90E-14	1.95E-14	8.45E-07	3.84E-10	4.44E-09
71-43-2	3.81E-21	2.48E-21	1.08E-13	4.89E-17	5.66E-16
75-05-8	3.78E-13	1.29E-13	5.60E-06	2.55E-09	2.95E-08
75-12-7	1.26E-09	4.74E-10	2.05E-02	9.33E-06	1.08E-04
76-15-3	0.00E+00	0.00E+00	0.00E+00	0.00E+00	0.00E+00
79-01-6	3.27E-22	3.58E-22	1.55E-14	7.05E-18	8.15E-17
83-32-9	4.16E-17	5.36E-17	2.32E-09	1.05E-12	1.22E-11
84-66-2	1.86E-10	3.46E-10	1.50E-02	6.80E-06	7.87E-05
84-74-2	7.53E-20	1.75E-19	7.57E-12	3.44E-15	3.98E-14
87-68-3	1.26E-22	2.75E-22	1.19E-14	5.40E-18	6.25E-17
88-89-1	2.49E-10	4.75E-10	2.06E-02	9.35E-06	1.08E-04
91-20-3	2.62E-17	2.80E-17	1.21E-09	5.50E-13	6.37E-12
95-50-1	2.91E-18	3.57E-18	1.54E-10	7.02E-14	8.13E-13
98-86-2	5.93E-12	5.96E-12	2.58E-04	1.17E-07	1.36E-06
100-21-0	5.01E-20	6.94E-20	3.00E-12	1.37E-15	1.58E-14
101-84-8	6.29E-18	8.94E-18	3.87E-10	1.76E-13	2.03E-12
106-93-4	9.02E-18	1.41E-17	6.12E-10	2.78E-13	3.22E-12
106-97-8	0.00E+00	0.00E+00	0.00E+00	0.00E+00	0.00E+00
106-99-0	0.00E+00	0.00E+00	0.00E+00	0.00E+00	0.00E+00
108-87-2	0.00E+00	0.00E+00	0.00E+00	0.00E+00	0.00E+00
108-88-3	1.33E-21	1.02E-21	4.43E-14	2.02E-17	2.33E-16
108-95-2	5.48E-10	4.31E-10	1.86E-02	8.47E-06	9.80E-05
110-54-3	0.00E+00	0.00E+00	0.00E+00	0.00E+00	0.00E+00
110-82-7	0.00E+00	0.00E+00	0.00E+00	0.00E+00	0.00E+00
111-84-2	0.00E+00	0.00E+00	0.00E+00	0.00E+00	0.00E+00
120-12-7	3.76E-21	5.59E-21	2.42E-13	1.10E-16	1.27E-15
120-82-1	1.51E-18	2.29E-18	9.89E-11	4.50E-14	5.20E-13
122-39-4	2.76E-20	3.89E-20	1.68E-12	7.66E-18	8.86E-15
126-73-8	8.55E-14	1.90E-13	8.22E-06	3.74E-09	4.33E-08
127-18-4	5.60E-26	7.75E-26	3.35E-18	1.52E-21	1.76E-20
129-00-0	3.14E-20	5.31E-20	2.30E-12	1.04E-15	1.21E-14
132-64-9	5.45E-15	7.66E-15	3.31E-07	1.51E-10	1.74E-09
144-62-7	3.16E-08	2.37E-08	1.03E+00	4.67E-04	5.40E-03
193-39-5	4.84E-23	1.12E-22	4.83E-15	2.20E-18	2.54E-17
206-44-0	3.20E-17	5.39E-17	2.33E-09	1.06E-12	1.23E-11
208-96-8	3.43E-14	4.36E-14	1.89E-06	8.57E-10	9.92E-09
603-34-9	1.52E-14	3.10E-14	1.34E-06	6.11E-10	7.07E-09
621-64-7	4.96E-17	5.39E-17	2.33E-09	1.06E-12	1.23E-11
1321-64-8	2.14E-17	5.37E-17	2.32E-09	1.06E-12	1.22E-11
1336-36-3	7.73E-24	2.08E-23	8.99E-16	4.09E-19	4.73E-18
3697-24-3	2.67E-17	5.40E-17	2.34E-09	1.06E-12	1.23E-11
4170-30-3	2.90E-12	1.69E-12	7.33E-05	3.33E-08	3.86E-07
10061-01-5	7.07E-20	6.55E-20	2.83E-12	1.29E-15	1.49E-14
26140-60-3	2.80E-17	5.39E-17	2.33E-09	1.06E-12	1.23E-11

Stream Number:	PJV34
Stream Name:	Pulse vent HEPA discharge offgas
Configuration:	MRQ-05-0049.acmf
Run Date / Time:	12/14/2005 - 1:42:25 PM
Run Data File:	H:\ACM v3.1\MRQ-05-0049\MRQ_05_0049A_Streams.csv

Stream Properties			
Variable	Value	Units	
Density	9.73E-04	g/cm^3	(does not include solid phase)
Enthalpy	-6.84E+05	BTU/hr	
Mass Flow	2.11E+04	Lb/hr	
	5.06E+05	Lb/day	
Volumetric Flow	4.33E+04	GPM	(does not include solid phase)
	5.79E+03	ft^3/min	(does not include solid phase)
Molar Flow	7.34E+02	Lbmol/hr	
Molecular Weight	2.87E+01	Lb/Lbmol	
Pressure	8.56E+02	mbar	
Temperature	3.10E+01	C	
Na Molarity	0.00E+00	mol/L	
pH	1.44E+01	pH	
Total TRU	2.50E-19	Ci/L	
Total Activity	2.39E-15	Ci/L	

Component	Aqueous Comp			Solid Comp	Gaseous (1)		Total Comp		
Unit	mol/L	Lb/gal	Lb/day	Lb/day	mol/L	Lb/day	Lb/day	mt/day	g/sec
Total	2.76E-09	4.15E-10	2.59E-02	3.44E-06	3.38E-02	5.06E+05	5.06E+05	2.30E+02	2.66E+03
Ag^+	1.30E-28	1.17E-28	7.31E-21	3.84E-13	0.00E+00	0.00E+00	3.84E-13	1.74E-16	2.02E-15
Al^{+3}	1.57E-24	3.54E-25	2.21E-17	2.00E-11	0.00E+00	0.00E+00	2.00E-11	9.09E-15	1.05E-13
As^{+3}	5.73E-28	3.59E-28	2.24E-20	4.03E-14	0.00E+00	0.00E+00	4.03E-14	1.83E-17	2.12E-16
B^{+3}	8.81E-25	7.95E-26	4.95E-18	3.55E-11	0.00E+00	0.00E+00	3.55E-11	1.61E-14	1.87E-13
Ba^{+2}	1.20E-28	1.37E-28	8.54E-21	1.02E-13	0.00E+00	0.00E+00	1.02E-13	4.64E-17	5.37E-16
Bi^{+3}	1.41E-28	2.45E-28	1.53E-20	9.25E-13	0.00E+00	0.00E+00	9.25E-13	4.20E-16	4.67E-15
Ca^{+2}	2.87E-20	9.58E-21	5.97E-13	2.42E-13	0.00E+00	0.00E+00	8.39E-13	3.81E-16	4.41E-15
Cd^{+2}	2.22E-28	2.08E-28	1.30E-20	4.15E-12	0.00E+00	0.00E+00	4.15E-12	1.89E-15	2.18E-14
Ce^{+3}	3.20E-19	3.74E-19	2.33E-11	7.29E-14	0.00E+00	0.00E+00	2.34E-11	1.06E-14	1.23E-13
Cl^-	3.92E-19	1.16E-19	7.23E-12	1.87E-20	0.00E+00	0.00E+00	7.23E-12	3.28E-15	3.80E-14
CO	0.00E+00	0.00E+00	0.00E+00	0.00E+00	0.00E+00	0.00E+00	0.00E+00	0.00E+00	0.00E+00
CO_2	6.61E-18	2.43E-18	1.51E-10	0.00E+00	4.48E-15	1.03E-07	1.03E-07	4.67E-11	5.41E-10
CO_3^{-2}	1.92E-21	9.59E-22	5.98E-14	6.91E-16	0.00E+00	0.00E+00	6.05E-14	2.75E-17	3.18E-16
Cr^{+3}	2.28E-20	9.88E-21	6.16E-13	3.69E-13	0.00E+00	0.00E+00	9.85E-13	4.48E-16	5.18E-15
Cu^{+2}	2.20E-28	1.17E-28	7.27E-21	2.57E-14	0.00E+00	0.00E+00	2.57E-14	1.17E-17	1.35E-16
F^-	4.57E-18	7.24E-19	4.52E-11	3.39E-19	0.00E+00	0.00E+00	4.52E-11	2.05E-14	2.38E-13
Fe^{+3}	7.92E-20	3.69E-20	2.30E-12	1.52E-11	0.00E+00	0.00E+00	1.75E-11	7.96E-15	9.21E-14
H_2O	2.76E-09	4.15E-10	2.59E-02	0.00E+00	3.28E-04	3.07E+03	3.07E+03	1.40E+00	1.62E+01
$H_2O(b)$	0.00E+00	0.00E+00	0.00E+00	0.00E+00	0.00E+00	0.00E+00	0.00E+00	0.00E+00	0.00E+00
H^+	3.77E-15	3.17E-17	1.98E-09	0.00E+00	0.00E+00	0.00E+00	1.98E-09	8.99E-13	1.04E-11
HCL	0.00E+00	0.00E+00	0.00E+00	0.00E+00	0.00E+00	0.00E+00	0.00E+00	0.00E+00	0.00E+00
HCO3-	9.97E-20	5.08E-20	3.17E-12	3.84E-34	0.00E+00	0.00E+00	3.17E-12	1.44E-15	1.67E-14
H2CO3	0.00E+00	0.00E+00	0.00E+00	0.00E+00	0.00E+00	0.00E+00	0.00E+00	0.00E+00	0.00E+00
HF	0.00E+00	0.00E+00	0.00E+00	0.00E+00	0.00E+00	0.00E+00	0.00E+00	0.00E+00	0.00E+00
Hg^{+2}	0.00E+00	0.00E+00	0.00E+00	3.44E-06	0.00E+00	0.00E+00	3.44E-06	1.56E-09	1.81E-08
HNO_3	0.00E+00	0.00E+00	0.00E+00	0.00E+00	0.00E+00	0.00E+00	0.00E+00	0.00E+00	0.00E+00
K^+	2.51E-19	8.19E-20	5.10E-12	1.23E-28	0.00E+00	0.00E+00	5.10E-12	2.32E-15	2.69E-14
La^{+3}	6.15E-29	7.13E-29	4.45E-21	3.81E-13	0.00E+00	0.00E+00	3.81E-13	1.73E-16	2.01E-15
Li^+	6.08E-19	3.52E-20	2.19E-12	2.25E-12	0.00E+00	0.00E+00	4.44E-12	2.02E-15	2.34E-14
Mg^{+2}	1.81E-27	3.68E-28	2.29E-20	2.46E-13	0.00E+00	0.00E+00	2.46E-13	1.12E-16	1.29E-15
Mn^{+3}	1.97E-27	9.02E-28	5.62E-20	1.99E-12	0.00E+00	0.00E+00	1.99E-12	9.05E-16	1.05E-14
MnO_4^-	0.00E+00	0.00E+00	0.00E+00	0.00E+00	0.00E+00	0.00E+00	0.00E+00	0.00E+00	0.00E+00
N_2	0.00E+00	0.00E+00	0.00E+00	0.00E+00	2.65E-02	3.86E+05	3.86E+05	1.75E+02	2.03E+03
Na^+	2.42E-17	4.65E-18	2.90E-10	3.65E-17	0.00E+00	0.00E+00	2.90E-10	1.32E-13	1.53E-12
NH3	7.60E-16	1.08E-16	6.74E-09	0.00E+00	0.00E+00	0.00E+00	6.74E-09	3.06E-12	3.54E-11
NH4+	6.65E-19	1.08E-16	6.24E-12	0.00E+00	0.00E+00	0.00E+00	6.24E-12	2.84E-15	3.28E-14
Ni^{+2}	1.07E-20	5.25E-21	3.28E-13	7.52E-13	0.00E+00	0.00E+00	1.08E-12	4.91E-16	5.68E-15
NO	0.00E+00	0.00E+00	0.00E+00	0.00E+00	0.00E+00	0.00E+00	0.00E+00	0.00E+00	0.00E+00
NO_2	0.00E+00	0.00E+00	0.00E+00	0.00E+00	0.00E+00	0.00E+00	0.00E+00	0.00E+00	0.00E+00
NO_2^-	3.42E-24	1.31E-24	8.18E-17	1.06E-16	0.00E+00	0.00E+00	1.88E-16	8.53E-20	9.87E-19
NO_3^-	1.38E-17	7.14E-18	4.45E-10	8.16E-17	0.00E+00	0.00E+00	4.45E-10	2.02E-13	2.34E-12
O_2	0.00E+00	0.00E+00	0.00E+00	0.00E+00	7.04E-03	1.17E+05	1.17E+05	5.33E+01	6.17E+02
O^-	0.00E+00	0.00E+00	0.00E+00	1.39E-10	0.00E+00	0.00E+00	1.39E-10	6.31E-14	7.30E-13
OH^-	8.25E-18	1.17E-18	7.30E-11	1.98E-15	0.00E+00	0.00E+00	7.30E-11	3.32E-14	3.84E-13
$OH(b)^-$	3.48E-24	4.95E-25	3.08E-17	1.88E-39	0.00E+00	0.00E+00	3.08E-17	1.40E-20	1.62E-19
Pb^{+2}	8.05E-28	1.39E-27	8.67E-20	1.10E-12	0.00E+00	0.00E+00	1.10E-12	5.00E-16	5.79E-15
Pd^{+2}	6.27E-29	5.57E-29	3.47E-21	1.80E-14	0.00E+00	0.00E+00	1.80E-14	8.17E-18	9.45E-17
PO_4^{-3}	6.44E-26	5.10E-26	3.18E-18	1.02E-11	0.00E+00	0.00E+00	1.02E-11	4.64E-15	5.37E-14
Resin	0.00E+00	0.00E+00	0.00E+00	0.00E+00	0.00E+00	0.00E+00	0.00E+00	0.00E+00	0.00E+00
Rh^{+3}	6.07E-29	5.21E-29	3.25E-21	3.18E-14	0.00E+00	0.00E+00	3.18E-14	1.44E-17	1.67E-16
Ru^{+3}	8.93E-29	7.53E-29	4.70E-21	2.73E-12	0.00E+00	0.00E+00	2.73E-12	1.24E-15	1.44E-14
S^{+6}	0.00E+00	0.00E+00	0.00E+00	5.38E-35	0.00E+00	0.00E+00	5.38E-35	2.45E-38	2.83E-37
SiO2	1.22E-26	6.10E-27	3.80E-19	8.61E-11	0.00E+00	0.00E+00	8.61E-11	3.91E-14	4.53E-13
SiO_4^{-4}	9.29E-39	7.14E-39	4.45E-31	6.58E-18	0.00E+00	0.00E+00	6.58E-18	2.99E-21	3.46E-20
SO_2	0.00E+00	0.00E+00	0.00E+00	0.00E+00	0.00E+00	0.00E+00	0.00E+00	0.00E+00	0.00E+00
SO_4^{-2}	1.54E-25	1.23E-25	7.67E-18	9.63E-19	0.00E+00	0.00E+00	8.64E-18	3.93E-21	4.54E-20
Sr^{+2}	7.90E-22	5.78E-22	3.60E-14	2.08E-14	0.00E+00	0.00E+00	5.68E-14	2.58E-17	2.99E-16
Sucrose	0.00E+00	0.00E+00	0.00E+00	0.00E+00	0.00E+00	0.00E+00	0.00E+00	0.00E+00	0.00E+00
Tl^{+4}	1.01E-28	4.04E-29	2.52E-21	5.20E-15	0.00E+00	0.00E+00	5.20E-15	2.36E-18	2.73E-17
Zn^{+2}	3.75E-28	2.05E-28	1.28E-20	4.83E-12	0.00E+00	0.00E+00	4.83E-12	2.19E-15	2.54E-14
Zr^{+4}	2.77E-28	2.11E-28	1.31E-20	2.42E-12	0.00E+00	0.00E+00	2.42E-12	1.10E-15	1.27E-14

Components	Aqueous Comp			Solid Comp	Gaseous		Total Comp		
Unit	mol/L	Lb/gal	Lb/day	Lb/day	mol/L	Lb/day	Lb/day	Mt/day	g/sec
Total	8.10E-26	5.95E-26	3.71E-18	1.51E-09	0.00E+00	0.00E+00	1.51E-09	6.85E-13	7.93E-12
$C_2O_4^{-2}$	8.10E-26	5.95E-26	3.71E-18	1.51E-09	0.00E+00	0.00E+00	1.51E-09	6.85E-13	7.93E-12
Formate	0.00E+00	0.00E+00	0.00E+00	0.00E+00	0.00E+00	0.00E+00	0.00E+00	0.00E+00	0.00E+00
Acetate	0.00E+00	0.00E+00	0.00E+00	9.45E-32	0.00E+00	0.00E+00	9.45E-32	4.29E-35	4.97E-34
Glycolate	0.00E+00	0.00E+00	0.00E+00	0.00E+00	0.00E+00	0.00E+00	0.00E+00	0.00E+00	0.00E+00
IDA	0.00E+00	0.00E+00	0.00E+00	0.00E+00	0.00E+00	0.00E+00	0.00E+00	0.00E+00	0.00E+00
Citrate	0.00E+00	0.00E+00	0.00E+00	2.58E-32	0.00E+00	0.00E+00	2.58E-32	1.17E-35	1.36E-34
HEDTA	0.00E+00	0.00E+00	0.00E+00	3.44E-32	0.00E+00	0.00E+00	3.44E-32	1.56E-35	1.81E-34
EDTA	0.00E+00	0.00E+00	0.00E+00	0.00E+00	0.00E+00	0.00E+00	0.00E+00	0.00E+00	0.00E+00

Rad. Comp	Aqueous Rad. Comp			Solids Rad. Comp (1)			Total Rad. Comp (1)		
Unit	Ci/L	Ci/day	Lb/day	Ci/L	Ci/day	Lb/day	Ci/L	Ci/day	Lb/day
Total	7.97E-18	1.88E-09	3.00E-14	2.38E-15	5.61E-07	2.21E-09	2.39E-15	5.63E-07	2.21E-09
^{241}Am	1.22E-27	2.88E-19	1.85E-22	1.98E-19	4.67E-11	3.00E-14	1.98E-19	4.67E-11	3.00E-14
^{243}Am	7.96E-31	1.88E-22	2.08E-24	1.61E-23	3.79E-15	4.18E-17	1.61E-23	3.79E-15	4.18E-17
^{14}C	0.00E+00	0.00E+00	0.00E+00	0.00E+00	0.00E+00	0.00E+00	0.00E+00	0.00E+00	0.00E+00
^{60}Co	1.64E-28	3.88E-20	7.56E-26	1.77E-20	4.17E-12	8.13E-18	1.77E-20	4.17E-12	8.13E-18
^{243}Cm	1.32E-31	3.12E-23	1.36E-27	2.23E-22	5.26E-14	2.29E-18	2.23E-22	5.26E-14	2.29E-18
^{244}Cm	3.13E-30	7.38E-22	2.01E-26	5.06E-21	1.20E-12	3.26E-17	5.06E-21	1.20E-12	3.26E-17
^{137}Cs	3.58E-22	8.46E-14	2.15E-18	6.84E-17	1.61E-08	4.10E-13	6.84E-17	1.61E-08	4.10E-13
^{152}Eu	9.17E-30	2.16E-21	2.75E-26	8.48E-22	2.00E-13	2.54E-18	8.48E-22	2.00E-13	2.54E-18
^{154}Eu	1.90E-27	4.49E-19	3.66E-24	9.19E-20	2.17E-11	1.77E-16	9.19E-20	2.17E-11	1.77E-16
^{155}Eu	5.50E-28	1.30E-19	5.89E-25	1.36E-20	3.22E-12	1.46E-17	1.36E-20	3.22E-12	1.46E-17
^{3}H	1.98E-23	4.68E-15	1.07E-21	2.30E-15	5.43E-07	1.25E-13	2.30E-15	5.43E-07	1.25E-13
^{129}I	0.00E+00	0.00E+00	0.00E+00	7.27E-19	1.72E-10	2.14E-09	7.27E-19	1.72E-10	2.14E-09
^{63}Ni	2.94E-27	6.95E-19	2.70E-23	2.64E-21	6.23E-13	2.42E-17	2.64E-21	6.23E-13	2.42E-17
^{237}Np	9.69E-31	2.29E-22	7.15E-22	1.31E-22	3.08E-14	9.63E-14	1.31E-22	3.08E-14	9.63E-14
^{238}Pu	5.45E-30	1.29E-21	1.66E-25	6.19E-22	1.46E-13	1.88E-17	6.19E-22	1.46E-13	1.88E-17
^{239}Pu	7.54E-29	1.78E-20	6.32E-22	5.49E-21	1.29E-12	4.60E-14	5.49E-21	1.29E-12	4.60E-14
^{240}Pu	1.95E-29	4.61E-21	4.48E-23	1.45E-21	3.42E-13	3.32E-15	1.45E-21	3.42E-13	3.32E-15
^{241}Pu	4.10E-28	9.68E-20	2.07E-24	3.89E-20	9.17E-12	1.96E-16	3.89E-20	9.17E-12	1.96E-16
^{242}Pu	2.07E-33	4.88E-25	2.73E-25	9.72E-27	2.29E-18	1.28E-18	9.72E-27	2.29E-18	1.28E-18
^{125}Sb	1.14E-27	2.68E-19	5.69E-25	4.08E-20	9.62E-12	2.04E-17	4.08E-20	9.62E-12	2.04E-17
^{151}Sm	1.61E-26	3.79E-18	3.18E-22	3.78E-19	8.93E-11	7.48E-15	3.78E-19	8.93E-11	7.48E-15
^{126}Sn	1.81E-29	4.26E-21	8.27E-22	1.59E-22	3.75E-14	7.29E-15	1.59E-22	3.75E-14	7.29E-15
^{90}Sr	7.97E-18	1.88E-09	3.00E-14	4.61E-18	1.09E-09	1.74E-14	1.26E-17	2.97E-09	4.74E-14
^{99}Tc	3.15E-27	7.43E-19	9.67E-20	9.52E-19	2.25E-10	2.92E-11	9.52E-19	2.25E-10	2.92E-11
^{232}Th	2.97E-32	7.01E-24	1.40E-19	4.28E-24	1.01E-15	2.03E-11	4.28E-24	1.01E-15	2.03E-11
^{233}U	9.81E-31	2.32E-22	5.30E-23	3.53E-22	8.34E-14	1.91E-14	3.53E-22	8.34E-14	1.91E-14
^{234}U	6.97E-31	1.64E-22	5.84E-23	1.84E-23	4.34E-15	1.54E-15	1.84E-23	4.34E-15	1.54E-15
^{235}U	2.74E-32	6.48E-24	6.61E-21	4.14E-25	9.78E-17	9.98E-14	4.14E-25	9.78E-17	9.98E-14
^{236}U	4.70E-32	1.11E-23	3.78E-22	5.69E-25	1.34E-16	4.58E-15	5.69E-25	1.34E-16	4.58E-15
^{238}U	5.44E-31	1.28E-22	8.42E-19	1.04E-23	2.45E-15	1.60E-11	1.04E-23	2.45E-15	1.60E-11

(1) All radionuclides in gaseous streams are assumed to exist as solid particulate.

CAS Comp	Organic Components				
Unit	mol/L	Lb/gal	Lb/day	Mt/day	g/sec
Total	4.72E-15	7.74E-15	4.82E-07	2.19E-10	2.54E-09
50-32-8	7.27E-21	1.53E-20	9.54E-13	4.34E-16	5.02E-15
56-23-5	1.55E-62	1.99E-62	1.24E-54	5.63E-58	6.52E-57
57-14-7	1.20E-44	6.01E-45	3.75E-37	1.70E-40	1.97E-39
58-90-2	2.41E-31	4.67E-31	2.91E-23	1.32E-26	1.53E-25
59-89-2	0.00E+00	0.00E+00	0.00E+00	0.00E+00	0.00E+00
60-35-5	0.00E+00	0.00E+00	0.00E+00	0.00E+00	0.00E+00
62-75-9	0.00E+00	0.00E+00	0.00E+00	0.00E+00	0.00E+00
64-19-7	0.00E+00	0.00E+00	0.00E+00	0.00E+00	0.00E+00
71-43-2	2.96E-56	1.93E-56	1.20E-48	5.48E-52	6.34E-51
75-05-8	1.39E-45	4.77E-46	2.98E-38	1.35E-41	1.57E-40
75-12-7	1.57E-29	5.91E-30	3.69E-22	1.68E-25	1.94E-24
76-15-3	0.00E+00	0.00E+00	0.00E+00	0.00E+00	0.00E+00
79-01-6	2.08E-58	2.28E-58	1.42E-50	6.46E-54	7.47E-53
83-32-9	0.00E+00	0.00E+00	0.00E+00	0.00E+00	0.00E+00
84-66-2	7.01E-30	1.30E-29	8.10E-22	3.68E-25	4.26E-24
84-74-2	2.91E-21	6.76E-21	4.21E-13	1.91E-16	2.22E-15
87-68-3	7.48E-60	1.63E-59	1.01E-51	4.61E-55	5.34E-54
88-89-1	0.00E+00	0.00E+00	0.00E+00	0.00E+00	0.00E+00
91-20-3	6.09E-50	6.51E-50	4.06E-42	1.84E-45	2.14E-44
95-50-1	0.00E+00	0.00E+00	0.00E+00	0.00E+00	0.00E+00
98-86-2	8.56E-31	8.61E-31	5.37E-23	2.44E-26	2.82E-25
100-21-0	3.15E-15	4.37E-15	2.72E-07	1.24E-10	1.43E-09
101-84-8	0.00E+00	0.00E+00	0.00E+00	0.00E+00	0.00E+00
106-93-4	2.56E-49	4.02E-49	2.51E-41	1.14E-44	1.32E-43
106-97-8	0.00E+00	0.00E+00	0.00E+00	0.00E+00	0.00E+00
106-99-0	0.00E+00	0.00E+00	0.00E+00	0.00E+00	0.00E+00
108-87-2	0.00E+00	0.00E+00	0.00E+00	0.00E+00	0.00E+00
108-88-3	2.53E-56	1.95E-56	1.21E-48	5.52E-52	6.39E-51
108-95-2	1.80E-29	1.42E-29	8.83E-22	4.01E-25	4.65E-24
110-54-3	0.00E+00	0.00E+00	0.00E+00	0.00E+00	0.00E+00
110-82-7	0.00E+00	0.00E+00	0.00E+00	0.00E+00	0.00E+00
111-84-2	0.00E+00	0.00E+00	0.00E+00	0.00E+00	0.00E+00
120-12-7	1.53E-18	2.27E-18	1.42E-10	6.44E-14	7.45E-13
120-82-1	5.41E-52	8.19E-52	5.11E-44	2.32E-47	2.69E-46
122-39-4	1.22E-16	1.72E-16	1.07E-08	4.88E-12	5.65E-11
126-73-8	1.33E-15	2.95E-15	1.84E-07	8.35E-11	9.66E-10
127-18-4	2.76E-61	3.81E-61	2.38E-53	1.08E-56	1.25E-55
129-00-0	2.21E-22	3.73E-22	2.32E-14	1.06E-17	1.22E-16
132-64-9	1.90E-47	2.67E-47	1.66E-39	7.57E-43	8.76E-42
144-62-7	2.95E-32	2.22E-32	1.38E-24	6.26E-28	7.27E-27
193-39-5	3.94E-26	9.08E-26	5.66E-18	2.57E-21	2.98E-20
206-44-0	0.00E+00	0.00E+00	0.00E+00	0.00E+00	0.00E+00
208-96-8	7.56E-34	9.60E-34	5.98E-26	2.72E-29	3.15E-28
603-34-9	1.21E-16	2.49E-16	1.55E-08	7.04E-12	8.15E-11
621-64-7	0.00E+00	0.00E+00	0.00E+00	0.00E+00	0.00E+00
1321-64-8	0.00E+00	0.00E+00	0.00E+00	0.00E+00	0.00E+00
1336-36-3	6.85E-27	1.84E-26	1.15E-18	5.21E-22	6.04E-21
3697-24-3	0.00E+00	0.00E+00	0.00E+00	0.00E+00	0.00E+00
4170-30-3	0.00E+00	0.00E+00	0.00E+00	0.00E+00	0.00E+00
10061-01-5	1.72E-53	1.59E-53	9.91E-46	4.50E-49	5.21E-48
26140-60-3	0.00E+00	0.00E+00	0.00E+00	0.00E+00	0.00E+00

Stream Number: LFP04
Stream Name: Blended LAW melter feed to melter
Configuration: MRQ-05-0049.acmf
Run Date / Time: 12/14/2005 - 1:42:25 PM
Run Data File: H:\ACM v3.1\MRQ-05-0049\MRQ_05_0049A_Streams.csv

Stream Properties Variable	Value	Units	
Density	1.21E+00	g/cm^3	(does not include solid phase)
Enthalpy	-3.75E+07	BTU/hr	
Mass Flow	1.03E+04	Lb/hr	
	2.46E+05	Lb/day	
Volumetric Flow	1.03E+01	GPM	(does not include solid phase)
	1.37E+00	ft^3/min	(does not include solid phase)
Molar Flow	3.11E+02	Lbmol/hr	
Molecular Weight	2.00E+01	Lb/Lbmol	
Pressure	1.00E+03	mbar	
Temperature	3.00E+01	C	
Na Molarity	4.53E+00	mol/L	
pH	1.28E+01	pH	
Total TRU	4.60E-04	Ci/L	
Total Activity	1.12E-01	Ci/L	

Component	Aqueous Comp			Solid Comp	Gaseous (1)		Total Comp		
Unit	mol/L	Lb/gal	Lb/day	Lb/day	mol/L	Lb/day	Lb/day	mt/day	g/sec
Total	6.05E+01	1.01E+01	1.49E+05	9.57E+04	0.00E+00	0.00E+00	2.45E+05	1.11E+02	1.29E+03
Ag^+	3.38E-05	3.04E-05	4.50E-01	1.57E-02	0.00E+00	0.00E+00	4.66E-01	2.12E-04	2.45E-03
Al^{+3}	4.10E-01	9.22E-02	1.36E+03	2.27E+03	0.00E+00	0.00E+00	3.63E+03	1.65E+00	1.91E+01
As^{+3}	1.49E-04	9.31E-05	1.38E+00	2.72E-01	0.00E+00	0.00E+00	1.65E+00	7.50E-04	8.68E-03
B^{+3}	2.46E+00	2.22E-01	3.28E+03	1.12E+02	0.00E+00	0.00E+00	3.39E+03	1.54E+00	1.79E+01
Ba^{+2}	3.11E-05	3.56E-05	5.27E-01	5.68E-03	0.00E+00	0.00E+00	5.32E-01	2.42E-04	2.80E-03
Bi^{+3}	3.67E-05	6.39E-05	9.46E-01	1.38E-02	0.00E+00	0.00E+00	9.60E-01	4.36E-04	5.05E-03
Ca^{+2}	4.62E-03	1.55E-03	2.29E+01	3.20E+03	0.00E+00	0.00E+00	3.23E+03	1.47E+00	1.70E+01
Cd^{+2}	5.78E-05	5.42E-05	8.02E-01	2.52E-01	0.00E+00	0.00E+00	1.05E+00	4.79E-04	5.54E-03
Ce^{+3}	1.38E-03	1.61E-03	2.39E+01	1.20E-01	0.00E+00	0.00E+00	2.40E+01	1.09E-02	1.26E-01
Cl^-	7.69E-02	2.28E-02	3.37E+02	7.97E-01	0.00E+00	0.00E+00	3.37E+02	1.53E-01	1.77E+00
CO	0.00E+00	0.00E+00	0.00E+00	0.00E+00	0.00E+00	0.00E+00	0.00E+00	0.00E+00	0.00E+00
CO_2	0.00E+00	0.00E+00	0.00E+00	0.00E+00	0.00E+00	0.00E+00	0.00E+00	0.00E+00	0.00E+00
CO_3^{-2}	3.29E-01	1.65E-01	2.44E+03	3.87E+03	0.00E+00	0.00E+00	6.31E+03	2.87E+00	3.32E+01
Cr^{+3}	9.91E-03	4.30E-03	6.36E+01	7.04E+00	0.00E+00	0.00E+00	7.07E+01	3.21E-02	3.72E-01
Cu^{+2}	5.71E-05	3.03E-05	4.48E-01	2.38E-03	0.00E+00	0.00E+00	4.50E-01	2.05E-04	2.37E-03
F^-	3.75E-02	5.95E-03	8.80E+01	8.16E-03	0.00E+00	0.00E+00	8.80E+01	4.00E-02	4.63E-01
Fe^{+3}	1.81E-03	8.42E-04	1.25E+01	4.54E+03	0.00E+00	0.00E+00	4.56E+03	2.07E+00	2.40E+01
H_2O	4.00E+01	6.01E+00	8.90E+04	0.00E+00	0.00E+00	0.00E+00	8.90E+04	4.04E+01	4.68E+02
$H_2O(b)$	0.00E+00	0.00E+00	0.00E+00	0.00E+00	0.00E+00	0.00E+00	0.00E+00	0.00E+00	0.00E+00
H^+	1.50E-13	1.26E-15	1.86E-11	0.00E+00	0.00E+00	0.00E+00	1.86E-11	8.46E-15	9.79E-14
HCL	0.00E+00	0.00E+00	0.00E+00	0.00E+00	0.00E+00	0.00E+00	0.00E+00	0.00E+00	0.00E+00
HCO3-	1.85E-24	9.40E-25	1.39E-20	3.26E-15	0.00E+00	0.00E+00	3.26E-15	1.48E-18	1.71E-17
H2CO3	1.17E-23	6.04E-24	8.93E-20	0.00E+00	0.00E+00	0.00E+00	8.93E-20	4.06E-23	4.70E-22
HF	0.00E+00	0.00E+00	0.00E+00	0.00E+00	0.00E+00	0.00E+00	0.00E+00	0.00E+00	0.00E+00
Hg^{+2}	5.98E-05	1.00E-04	1.48E+00	3.99E+00	0.00E+00	0.00E+00	5.47E+00	2.48E-03	2.88E-02
HNO_3	0.00E+00	0.00E+00	0.00E+00	0.00E+00	0.00E+00	0.00E+00	0.00E+00	0.00E+00	0.00E+00
K^+	1.47E-01	4.80E-02	7.10E+02	1.00E+01	0.00E+00	0.00E+00	7.20E+02	3.27E-01	3.79E+00
La^{+3}	1.58E-05	1.84E-05	2.72E-01	6.24E-03	0.00E+00	0.00E+00	2.78E-01	1.26E-04	1.46E-03
Li^+	6.73E-03	3.90E-04	5.76E+00	8.92E+02	0.00E+00	0.00E+00	8.98E+02	4.08E-01	4.72E+00
Mg^{+2}	4.71E-04	9.55E-05	1.41E+00	1.18E+03	0.00E+00	0.00E+00	1.18E+03	5.37E-01	6.22E+00
Mn^{+3}	5.11E-04	2.34E-04	3.46E+00	1.31E+01	0.00E+00	0.00E+00	1.65E+01	7.51E-03	8.69E-02
MnO_4^-	0.00E+00	0.00E+00	0.00E+00	0.00E+00	0.00E+00	0.00E+00	0.00E+00	0.00E+00	0.00E+00
N_2	1.01E-23	2.37E-24	3.50E-20	0.00E+00	0.00E+00	0.00E+00	3.50E-20	1.59E-23	1.84E-22
Na^+	4.53E+00	8.68E-01	1.28E+04	3.88E+00	0.00E+00	0.00E+00	1.28E+04	5.84E+00	6.76E+01
NH3	5.33E-04	7.58E-05	1.12E+00	0.00E+00	0.00E+00	0.00E+00	1.12E+00	5.09E-04	5.90E-03
NH4+	7.66E-23	7.58E-05	1.71E-19	1.44E-16	0.00E+00	0.00E+00	1.44E-16	6.55E-20	7.58E-19
Ni^{+2}	8.26E-04	4.05E-04	5.99E+00	1.18E+01	0.00E+00	0.00E+00	1.78E+01	8.10E-03	9.38E-02
NO	0.00E+00	0.00E+00	0.00E+00	0.00E+00	0.00E+00	0.00E+00	0.00E+00	0.00E+00	0.00E+00
NO_2	0.00E+00	0.00E+00	0.00E+00	0.00E+00	0.00E+00	0.00E+00	0.00E+00	0.00E+00	0.00E+00
NO_2^-	8.90E-01	3.42E-01	5.06E+03	2.27E-02	0.00E+00	0.00E+00	5.06E+03	2.30E+00	2.66E+01
NO_3^-	1.63E+00	8.41E-01	1.24E+04	1.75E-02	0.00E+00	0.00E+00	1.24E+04	5.66E+00	6.55E+01
O_2	5.37E-26	1.43E-26	2.12E-22	0.00E+00	0.00E+00	0.00E+00	2.12E-22	9.63E-26	1.12E-24
O^-	0.00E+00	0.00E+00	0.00E+00	1.57E+04	0.00E+00	0.00E+00	1.57E+04	7.16E+00	8.28E+01
OH^-	6.69E-02	9.49E-03	1.40E+02	0.00E+00	0.00E+00	0.00E+00	1.40E+02	6.38E-02	7.39E-01
$OH(b)^-$	9.82E+00	1.39E+00	2.06E+04	0.00E+00	0.00E+00	0.00E+00	2.06E+04	9.38E+00	1.09E+02
Pb^{+2}	2.10E-04	3.62E-04	5.36E+00	9.99E-02	0.00E+00	0.00E+00	5.46E+00	2.48E-03	2.87E-02
Pd^{+2}	1.62E-05	1.44E-05	2.13E-01	1.20E-03	0.00E+00	0.00E+00	2.14E-01	9.75E-05	1.13E-03
PO_4^{-3}	1.67E-02	1.33E-02	1.96E+02	2.86E+01	0.00E+00	0.00E+00	2.25E+02	1.02E-01	1.18E+00
Resin	0.00E+00	0.00E+00	0.00E+00	0.00E+00	0.00E+00	0.00E+00	0.00E+00	0.00E+00	0.00E+00
Rh^{+3}	1.57E-05	1.35E-05	1.99E-01	3.87E-03	0.00E+00	0.00E+00	2.03E-01	9.24E-05	1.07E-03
Ru^{+3}	2.33E-05	1.97E-05	2.91E-01	9.17E-02	0.00E+00	0.00E+00	3.83E-01	1.74E-04	2.01E-03
S^{+6}	0.00E+00	0.00E+00	0.00E+00	1.04E-15	0.00E+00	0.00E+00	1.04E-15	4.73E-19	5.48E-18
SiO2	3.16E-03	1.58E-03	2.34E+01	5.10E+04	0.00E+00	0.00E+00	5.11E+04	2.32E+01	2.69E+02
SiO_4^{-4}	2.41E-15	1.86E-15	2.74E-11	0.00E+00	0.00E+00	0.00E+00	2.74E-11	1.25E-14	1.44E-13
SO_2	0.00E+00	0.00E+00	0.00E+00	0.00E+00	0.00E+00	0.00E+00	0.00E+00	0.00E+00	0.00E+00
SO_4^{-2}	3.99E-02	3.20E-02	4.74E+02	1.33E+01	0.00E+00	0.00E+00	4.87E+02	2.21E-01	2.56E+00
Sr^{+2}	8.50E-06	6.21E-06	9.19E-02	6.79E-04	0.00E+00	0.00E+00	9.26E-02	4.21E-05	4.87E-04
Sucrose	0.00E+00	0.00E+00	0.00E+00	6.60E+03	0.00E+00	0.00E+00	6.60E+03	3.00E+00	3.47E+01
Tl^{+4}	2.60E-05	1.04E-05	1.54E-01	9.67E+02	0.00E+00	0.00E+00	9.67E+02	4.40E-01	5.09E+00
Zn^{+2}	9.74E-05	5.31E-05	7.86E-01	2.70E+03	0.00E+00	0.00E+00	2.70E+03	1.23E+00	1.42E+01
Zr^{+4}	7.18E-05	5.47E-05	8.09E-01	2.50E+03	0.00E+00	0.00E+00	2.50E+03	1.14E+00	1.31E+01

Components	Aqueous Comp			Solid Comp	Gaseous		Total Comp		
Unit	mol/L	Lb/gal	Lb/day	Lb/day	mol/L	Lb/day	Lb/day	Mt/day	g/sec
Total	1.51E-02	1.11E-02	1.64E+02	9.04E+02	0.00E+00	0.00E+00	1.07E+03	4.85E-01	5.62E+00
$C_2O_4^{-2}$	1.51E-02	1.11E-02	1.64E+02	9.04E+02	0.00E+00	0.00E+00	1.07E+03	4.85E-01	5.62E+00
Formate	9.49E-15	3.56E-15	5.27E-11	0.00E+00	0.00E+00	0.00E+00	5.27E-11	2.40E-14	2.77E-13
Acetate	7.35E-15	3.62E-15	5.36E-11	0.00E+00	0.00E+00	0.00E+00	5.36E-11	2.44E-14	2.82E-13
Glycolate	4.89E-14	3.06E-14	4.53E-10	0.00E+00	0.00E+00	0.00E+00	4.53E-10	2.06E-13	2.38E-12
IDA	2.59E-14	2.88E-14	4.26E-10	0.00E+00	0.00E+00	0.00E+00	4.26E-10	1.94E-13	2.24E-12
Citrate	2.37E-15	3.80E-15	5.62E-11	0.00E+00	0.00E+00	0.00E+00	5.62E-11	2.56E-14	2.96E-13
HEDTA	1.11E-14	2.58E-14	3.82E-10	0.00E+00	0.00E+00	0.00E+00	3.82E-10	1.73E-13	2.01E-12
EDTA	1.33E-15	3.25E-15	4.81E-11	0.00E+00	0.00E+00	0.00E+00	4.81E-11	2.19E-14	2.53E-13

Rad. Comp	Aqueous Rad. Comp			Solids Rad. Comp (1)			Total Rad. Comp (1)		
Unit	Ci/L	Ci/day	Lb/day	Ci/L	Ci/day	Lb/day	Ci/L	Ci/day	Lb/day
Total	1.10E-01	6.19E+03	6.73E+01	1.30E-03	7.31E+01	5.34E+00	1.12E-01	6.26E+03	7.26E+01
^{241}Am	3.18E-04	1.78E+01	1.15E-02	5.80E-06	3.25E-01	2.09E-04	3.24E-04	1.81E+01	1.17E-02
^{243}Am	2.08E-07	1.16E-02	1.29E-04	2.77E-09	1.55E-04	1.71E-06	2.11E-07	1.18E-02	1.30E-04
^{14}C	6.50E-06	3.64E-01	1.80E-04	1.24E-10	6.96E-06	3.43E-09	6.50E-06	3.64E-01	1.80E-04
^{60}Co	4.26E-05	2.39E+00	4.65E-06	4.06E-07	2.27E-02	4.43E-08	4.30E-05	2.41E+00	4.70E-06
^{243}Cm	3.43E-08	1.92E-03	8.38E-08	2.64E-09	1.48E-04	6.45E-09	3.69E-08	2.07E-03	9.02E-08
^{244}Cm	8.12E-07	4.55E-02	1.24E-06	6.02E-08	3.37E-03	9.19E-08	8.72E-07	4.88E-02	1.33E-06
^{137}Cs	6.88E-05	3.85E+00	9.78E-05	1.44E-04	8.08E+00	2.05E-04	2.13E-04	1.19E+01	3.03E-04
^{152}Eu	2.40E-06	1.34E-01	1.70E-06	2.14E-08	1.20E-03	1.52E-08	2.42E-06	1.35E-01	1.72E-06
^{154}Eu	4.96E-04	2.78E+01	2.27E-04	3.51E-06	1.96E-01	1.60E-06	5.00E-04	2.80E+01	2.28E-04
^{155}Eu	1.44E-04	8.04E+00	3.65E-05	8.71E-07	4.88E-02	2.21E-07	1.44E-04	8.09E+00	3.67E-05
^{3}H	4.72E-06	2.64E-01	6.07E-08	2.27E-06	1.27E-01	2.92E-08	6.99E-06	3.92E-01	8.99E-08
^{129}I	1.98E-07	1.11E-02	1.38E-01	3.52E-08	1.97E-03	2.46E-02	2.33E-07	1.30E-02	1.63E-01
^{63}Ni	7.69E-04	4.31E+01	1.67E-03	8.66E-06	4.85E-01	1.88E-05	7.78E-04	4.35E+01	1.69E-03
^{237}Np	2.52E-07	1.41E-02	4.41E-02	2.71E-09	1.52E-04	4.74E-04	2.54E-07	1.42E-02	4.46E-02
^{238}Pu	1.42E-06	7.98E-02	1.03E-05	1.40E-08	7.85E-04	1.01E-07	1.44E-06	8.06E-02	1.04E-05
^{239}Pu	1.97E-05	1.10E+00	3.92E-02	1.60E-07	8.94E-03	3.18E-04	1.99E-05	1.11E+00	3.95E-02
^{240}Pu	5.11E-06	2.86E-01	2.78E-03	4.17E-08	2.33E-03	2.27E-05	5.15E-06	2.88E-01	2.80E-03
^{241}Pu	1.07E-04	6.00E+00	1.28E-04	9.68E-07	5.42E-02	1.16E-06	1.08E-04	6.05E+00	1.30E-04
^{242}Pu	5.40E-10	3.03E-05	1.69E-05	4.19E-12	2.35E-07	1.31E-07	5.45E-10	3.05E-05	1.71E-05
^{125}Sb	2.96E-04	1.66E+01	3.52E-05	4.29E-06	2.40E-01	5.11E-07	3.00E-04	1.68E+01	3.57E-05
^{151}Sm	4.16E-03	2.33E+02	1.95E-02	1.06E-05	5.92E-01	4.96E-05	4.17E-03	2.34E+02	1.96E-02
^{126}Sn	4.71E-06	2.64E-01	5.12E-02	2.65E-08	1.49E-03	2.88E-04	4.74E-06	2.65E-01	5.15E-02
^{90}Sr	1.03E-01	5.78E+03	9.22E-02	7.23E-04	4.05E+01	6.46E-04	1.04E-01	5.82E+03	9.29E-02
^{99}Tc	8.18E-04	4.58E+01	5.96E+00	4.00E-04	2.24E+01	2.91E+00	1.22E-03	6.82E+01	8.87E+00
^{232}Th	7.65E-09	4.28E-04	8.58E+00	1.87E-09	1.05E-04	2.10E+00	9.52E-09	5.33E-04	1.07E+01
^{233}U	2.55E-07	1.43E-02	3.27E-03	5.19E-09	2.91E-04	6.65E-05	2.60E-07	1.46E-02	3.33E-03
^{234}U	1.81E-07	1.01E-02	3.60E-03	1.11E-09	6.21E-05	2.21E-05	1.82E-07	1.02E-02	3.62E-03
^{235}U	7.13E-09	3.99E-04	4.07E-01	4.06E-11	2.27E-06	2.32E-03	7.17E-09	4.01E-04	4.10E-01
^{236}U	1.22E-08	6.84E-04	2.33E-02	6.79E-11	3.80E-06	1.30E-04	1.23E-08	6.87E-04	2.34E-02
^{238}U	1.41E-07	7.91E-03	5.19E+01	8.23E-10	4.61E-05	3.02E-01	1.42E-07	7.96E-03	5.22E+01

(1) All radionuclides in gaseous streams are assumed to exist as solid particulate.

CAS Comp	Organic Components				
Unit	mol/L	Lb/gal	Lb/day	Mt/day	g/sec
Total	4.13E-02	3.40E-02	5.03E+02	2.28E-01	2.64E+00
50-32-8	1.58E-04	3.33E-04	4.93E+00	2.24E-03	2.59E-02
56-23-5	0.00E+00	0.00E+00	0.00E+00	0.00E+00	0.00E+00
57-14-7	2.09E-06	1.05E-06	1.55E-02	7.04E-06	8.15E-05
58-90-2	1.17E-06	2.27E-06	3.35E-02	1.52E-05	1.76E-04
59-89-2	2.27E-13	2.20E-13	3.25E-09	1.48E-12	1.71E-11
60-35-5	1.70E-04	8.38E-05	1.24E+00	5.64E-04	6.52E-03
62-75-9	6.85E-05	4.23E-05	6.26E-01	2.85E-04	3.29E-03
64-19-7	1.58E-10	7.92E-11	1.17E-06	5.32E-10	6.16E-09
71-43-2	0.00E+00	0.00E+00	0.00E+00	0.00E+00	0.00E+00
75-05-8	3.59E-08	1.23E-08	1.82E-04	8.27E-08	9.57E-07
75-12-7	1.37E-03	5.16E-04	7.63E+00	3.47E-03	4.01E-02
76-15-3	0.00E+00	0.00E+00	0.00E+00	0.00E+00	0.00E+00
79-01-6	0.00E+00	0.00E+00	0.00E+00	0.00E+00	0.00E+00
83-32-9	2.69E-14	3.47E-14	5.13E-10	2.33E-13	2.70E-12
84-66-2	8.55E-05	1.59E-04	2.35E+00	1.07E-03	1.23E-02
84-74-2	2.78E-05	6.45E-05	9.54E-01	4.34E-04	5.02E-03
87-68-3	0.00E+00	0.00E+00	0.00E+00	0.00E+00	0.00E+00
88-89-1	2.71E-04	5.18E-04	7.67E+00	3.49E-03	4.03E-02
91-20-3	4.35E-14	4.66E-14	6.89E-10	3.13E-13	3.62E-12
95-50-1	0.00E+00	0.00E+00	0.00E+00	0.00E+00	0.00E+00
98-86-2	1.05E-06	1.06E-06	1.57E-02	7.12E-06	8.25E-05
100-21-0	4.22E-03	5.85E-03	8.66E+01	3.94E-02	4.56E-01
101-84-8	2.70E-15	3.84E-15	5.68E-11	2.58E-14	2.99E-13
106-93-4	3.99E-15	6.25E-15	9.24E-11	4.20E-14	4.86E-13
106-97-8	0.00E+00	0.00E+00	0.00E+00	0.00E+00	0.00E+00
106-99-0	0.00E+00	0.00E+00	0.00E+00	0.00E+00	0.00E+00
108-87-2	0.00E+00	0.00E+00	0.00E+00	0.00E+00	0.00E+00
108-88-3	0.00E+00	0.00E+00	0.00E+00	0.00E+00	0.00E+00
108-95-2	3.21E-04	2.52E-04	3.73E+00	1.70E-03	1.96E-02
110-54-3	0.00E+00	0.00E+00	0.00E+00	0.00E+00	0.00E+00
110-82-7	0.00E+00	0.00E+00	0.00E+00	0.00E+00	0.00E+00
111-84-2	0.00E+00	0.00E+00	0.00E+00	0.00E+00	0.00E+00
120-12-7	1.13E-08	1.68E-08	2.49E-04	1.13E-07	1.31E-06
120-82-1	1.90E-21	2.87E-21	4.25E-17	1.93E-20	2.23E-19
122-39-4	4.27E-06	6.03E-06	8.92E-02	4.05E-05	4.69E-04
126-73-8	1.15E-04	2.55E-04	3.78E+00	1.72E-03	1.99E-02
127-18-4	0.00E+00	0.00E+00	0.00E+00	0.00E+00	0.00E+00
129-00-0	8.89E-07	1.50E-06	2.22E-02	1.01E-05	1.17E-04
132-64-9	5.29E-11	7.42E-11	1.10E-06	4.99E-10	5.78E-09
144-62-7	3.44E-02	2.59E-02	3.83E+02	1.74E-01	2.01E+00
193-39-5	3.62E-12	8.35E-12	1.24E-07	5.62E-11	6.50E-10
206-44-0	1.07E-13	1.80E-13	2.66E-09	1.21E-12	1.40E-11
208-96-8	9.63E-10	1.22E-09	1.81E-05	8.22E-09	9.52E-08
503-34-9	3.08E-06	6.30E-06	9.32E-02	4.23E-05	4.90E-04
621-64-7	1.78E-13	1.94E-13	2.86E-09	1.30E-12	1.51E-11
1321-64-8	1.55E-14	3.89E-14	5.76E-10	2.62E-13	3.03E-12
1336-36-3	3.09E-13	8.31E-13	1.23E-08	5.58E-12	6.46E-11
3697-24-3	9.55E-14	1.93E-13	2.86E-09	1.30E-12	1.50E-11
4170-30-3	5.28E-07	3.09E-07	4.57E-03	2.08E-06	2.40E-05
10061-01-5	2.37E-22	2.20E-22	3.25E-18	1.48E-21	1.71E-20
26140-60-3	6.31E-14	1.21E-13	1.79E-09	8.15E-13	9.43E-12

Stream Number: HFP03
Stream Name: Blended HLW melter feed to HLW melter
Configuration: MRQ-05-0049.acmf
Run Date / Time: 12/14/2005 - 1:42:25 PM
Run Data File: H:\ACM v3.1\MRQ-05-0049\MRQ_05_0049A_Streams.csv

Stream Properties			
Variable	Value	Units	
Density	1.06E+00	g/cm^3	(does not include solid phase)
Enthalpy	-5.24E+06	BTU/hr	
Mass Flow	1.51E+03	Lb/hr	
	3.62E+04	Lb/day	
Volumetric Flow	1.54E+00	GPM	(does not include solid phase)
	2.05E-01	ft^3/min	(does not include solid phase)
Molar Flow	4.29E+01	Lbmol/hr	
Molecular Weight	1.89E+01	Lb/Lbmol	
Pressure	1.00E+03	mbar	
Temperature	3.00E+01	C	
Na Molarity	9.21E-01	mol/L	
pH	6.99E+00	pH	
Total TRU	1.36E-01	Ci/L	
Total Activity	3.03E+01	Ci/L	

Component	Aqueous Comp			Solid Comp	Gaseous (1)		Total Comp		
Unit	mol/L	Lb/gal	Lb/day	Lb/day	mol/L	Lb/day	Lb/day	mt/day	g/sec
Total	5.58E+01	8.81E+00	1.95E+04	1.52E+04	0.00E+00	0.00E+00	3.47E+04	1.58E+01	1.83E+02
Ag^+	5.81E-06	5.23E-06	1.16E-02	3.62E+00	0.00E+00	0.00E+00	3.63E+00	1.65E-03	1.91E-02
Al^{+3}	7.03E-02	1.58E-02	3.50E+01	6.01E+02	0.00E+00	0.00E+00	6.36E+02	2.89E-01	3.34E+00
As^{+3}	2.56E-05	1.60E-05	3.54E-02	2.33E-01	0.00E+00	0.00E+00	2.68E-01	1.22E-04	1.41E-03
B^{+3}	3.93E-02	3.55E-03	7.85E+00	3.31E+02	0.00E+00	0.00E+00	3.38E+02	1.54E-01	1.78E+00
Ba^{+2}	5.34E-06	6.12E-06	1.35E-02	3.23E+00	0.00E+00	0.00E+00	3.24E+00	1.47E-03	1.71E-02
Bi^{+3}	6.28E-06	1.09E-05	2.42E-02	1.69E+01	0.00E+00	0.00E+00	1.70E+01	7.71E-03	8.92E-02
Ca^{+2}	3.70E-04	1.24E-04	2.73E-01	1.97E+01	0.00E+00	0.00E+00	2.00E+01	9.09E-03	1.05E-01
Cd^{+2}	9.88E-06	9.27E-06	2.05E-02	1.31E+01	0.00E+00	0.00E+00	1.31E+01	5.94E-03	6.88E-02
Ce^{+3}	2.37E-04	2.77E-04	6.13E-01	4.02E+00	0.00E+00	0.00E+00	4.64E+00	2.11E-03	2.44E-02
Cl^-	1.22E-02	3.60E-03	7.95E+00	3.92E+00	0.00E+00	0.00E+00	1.19E+01	5.40E-03	6.25E-02
CO	6.36E-101	1.49E-101	3.29E-98	0.00E+00	0.00E+00	0.00E+00	3.29E-98	1.49E-101	1.73E-100
CO_2	4.90E-06	1.80E-06	3.98E-03	0.00E+00	0.00E+00	0.00E+00	3.98E-03	1.81E-06	2.09E-05
CO_3^{-2}	5.62E-02	2.82E-02	6.23E+01	1.09E+03	0.00E+00	0.00E+00	1.16E+03	5.26E-01	6.09E+00
Cr^{+3}	1.69E-03	7.35E-04	1.63E+00	1.01E+01	0.00E+00	0.00E+00	1.17E+01	5.32E-03	6.16E-02
Cu^{+2}	9.81E-06	5.20E-06	1.15E-02	1.37E+00	0.00E+00	0.00E+00	1.38E+00	6.28E-04	7.27E-03
F^-	5.51E-03	8.74E-04	1.93E+00	7.13E+01	0.00E+00	0.00E+00	7.32E+01	3.33E-02	3.85E-01
Fe^{+3}	3.11E-04	1.45E-04	3.20E-01	5.80E+02	0.00E+00	0.00E+00	5.80E+02	2.64E-01	3.05E+00
H_2O	5.35E+01	8.05E+00	1.78E+04	0.00E+00	0.00E+00	0.00E+00	1.78E+04	8.09E+00	9.36E+01
$H_2O(b)$	0.00E+00	0.00E+00	0.00E+00	1.38E+02	0.00E+00	0.00E+00	1.38E+02	6.27E-02	7.26E-01
H^+	1.01E-07	8.53E-10	1.89E-06	0.00E+00	0.00E+00	0.00E+00	1.89E-06	8.57E-10	9.92E-09
HCL	0.00E+00	0.00E+00	0.00E+00	0.00E+00	0.00E+00	0.00E+00	0.00E+00	0.00E+00	0.00E+00
HCO3-	7.10E-24	3.61E-24	7.99E-21	0.00E+00	0.00E+00	0.00E+00	7.99E-21	3.63E-24	4.21E-23
H2CO3	7.66E-23	3.96E-23	8.77E-20	0.00E+00	0.00E+00	0.00E+00	8.77E-20	3.99E-23	4.61E-22
HF	0.00E+00	0.00E+00	0.00E+00	0.00E+00	0.00E+00	0.00E+00	0.00E+00	0.00E+00	0.00E+00
Hg^{+2}	1.03E-05	1.72E-05	3.80E-02	7.45E+00	0.00E+00	0.00E+00	7.49E+00	3.41E-03	3.94E-02
HNO_3	0.00E+00	0.00E+00	0.00E+00	0.00E+00	0.00E+00	0.00E+00	0.00E+00	0.00E+00	0.00E+00
K^+	2.92E-02	9.53E-03	2.11E+01	1.11E+01	0.00E+00	0.00E+00	3.22E+01	1.46E-02	1.69E-01
La^{+3}	2.72E-06	3.16E-06	6.98E-03	6.06E+00	0.00E+00	0.00E+00	6.06E+00	2.76E-03	3.19E-02
Li^+	2.12E-04	1.23E-05	2.71E-02	1.40E+02	0.00E+00	0.00E+00	1.40E+02	6.38E-02	7.38E-01
Mg^{+2}	8.09E-05	1.64E-05	3.63E-02	4.88E+00	0.00E+00	0.00E+00	4.92E+00	2.24E-03	2.59E-02
Mn^{+3}	8.78E-05	4.03E-05	8.90E-02	4.74E+01	0.00E+00	0.00E+00	4.75E+01	2.16E-02	2.50E-01
MnO_4^-	0.00E+00	0.00E+00	0.00E+00	0.00E+00	0.00E+00	0.00E+00	0.00E+00	0.00E+00	0.00E+00
N_2	2.28E-03	5.33E-04	1.18E+00	0.00E+00	0.00E+00	0.00E+00	1.18E+00	5.36E-04	6.20E-03
Na^+	9.21E-01	1.77E-01	3.91E+02	8.68E+02	0.00E+00	0.00E+00	1.26E+03	5.72E-01	6.62E+00
NH3	3.72E-03	5.28E-04	1.17E+00	0.00E+00	0.00E+00	0.00E+00	1.17E+00	5.31E-04	6.14E-03
NH4+	3.69E-20	5.28E-04	1.23E-17	0.00E+00	0.00E+00	0.00E+00	1.23E-17	5.58E-21	6.46E-20
Ni^{+2}	1.41E-04	6.92E-05	1.53E-01	2.11E+01	0.00E+00	0.00E+00	2.12E+01	9.65E-03	1.12E-01
NO	4.00E-26	1.00E-26	2.22E-23	0.00E+00	0.00E+00	0.00E+00	2.22E-23	1.01E-26	1.17E-25
NO_2	5.65E-39	2.17E-39	4.80E-36	0.00E+00	0.00E+00	0.00E+00	4.80E-36	2.18E-39	2.52E-38
NO_2^-	1.53E-01	5.86E-02	1.30E+02	1.99E+02	0.00E+00	0.00E+00	3.28E+02	1.49E-01	1.73E+00
NO_3^-	8.33E-01	4.31E-01	9.54E+02	1.53E+02	0.00E+00	0.00E+00	1.11E+03	5.03E-01	5.82E+00
O_2	7.36E-04	1.96E-04	4.34E-01	0.00E+00	0.00E+00	0.00E+00	4.34E-01	1.97E-04	2.29E-03
O^-	0.00E+00	0.00E+00	0.00E+00	9.53E+02	0.00E+00	0.00E+00	9.53E+02	4.33E-01	5.01E+00
OH^-	9.86E-08	1.40E-08	3.10E-05	3.14E+03	0.00E+00	0.00E+00	3.14E+03	1.43E+00	1.65E+01
$OH(b)^-$	1.56E-01	2.21E-02	4.88E+01	1.98E-19	0.00E+00	0.00E+00	4.88E+01	2.22E-02	2.57E-01
Pb^{+2}	3.59E-05	6.20E-05	1.37E-01	2.77E+01	0.00E+00	0.00E+00	2.78E+01	1.27E-02	1.46E-01
Pd^{+2}	2.78E-06	2.46E-06	5.45E-03	1.14E+00	0.00E+00	0.00E+00	1.14E+00	5.19E-04	6.01E-03
PO_4^{-3}	2.87E-03	2.28E-03	5.04E+00	1.25E+02	0.00E+00	0.00E+00	1.30E+02	5.90E-02	6.83E-01
Resin	0.00E+00	0.00E+00	0.00E+00	0.00E+00	0.00E+00	0.00E+00	0.00E+00	0.00E+00	0.00E+00
Rh^{+3}	2.68E-06	2.30E-06	5.10E-03	3.68E-01	0.00E+00	0.00E+00	3.73E-01	1.69E-04	1.96E-03
Ru^{+3}	3.99E-06	3.36E-06	7.44E-03	3.37E+00	0.00E+00	0.00E+00	3.38E+00	1.54E-03	1.78E-02
S^{+6}	0.00E+00	0.00E+00	0.00E+00	8.52E-17	0.00E+00	0.00E+00	8.52E-17	3.87E-20	4.48E-19
SiO2	5.43E-04	2.72E-04	6.02E-01	6.30E+03	0.00E+00	0.00E+00	6.30E+03	2.86E+00	3.31E+01
SiO_4^{-4}	4.15E-16	3.19E-16	7.05E-13	2.08E-06	0.00E+00	0.00E+00	2.08E-06	9.45E-10	1.09E-08
SO_2	6.08E-42	3.25E-42	7.19E-39	0.00E+00	0.00E+00	0.00E+00	7.19E-39	3.27E-42	3.78E-41
SO_4^{-2}	6.86E-03	5.50E-03	1.22E+01	4.59E+01	0.00E+00	0.00E+00	5.80E+01	2.64E-02	3.05E-01
Sr^{+2}	1.45E-06	1.06E-06	2.34E-03	1.80E+00	0.00E+00	0.00E+00	1.81E+00	8.21E-04	9.51E-03
Sucrose	0.00E+00	0.00E+00	0.00E+00	3.59E-36	0.00E+00	0.00E+00	3.59E-36	1.63E-39	1.89E-38
Ti^{+4}	4.48E-06	1.79E-06	3.95E-03	3.05E+00	0.00E+00	0.00E+00	3.06E+00	1.39E-03	1.61E-02
Zn^{+2}	1.67E-05	9.13E-06	2.02E-02	1.53E+02	0.00E+00	0.00E+00	1.53E+02	6.97E-02	8.07E-01
Zr^{+4}	1.23E-05	9.40E-06	2.08E-02	1.46E+02	0.00E+00	0.00E+00	1.46E+02	6.63E-02	7.67E-01

Components	Aqueous Comp			Solid Comp	Gaseous		Total Comp		
Unit	mol/L	Lb/gal	Lb/day	Lb/day	mol/L	Lb/day	Lb/day	Mt/day	g/sec
Total	3.62E-03	2.66E-03	5.87E+00	5.21E+02	0.00E+00	0.00E+00	5.27E+02	2.40E-01	2.77E+00
$C_2O_4^{-2}$	3.62E-03	2.66E-03	5.87E+00	5.21E+02	0.00E+00	0.00E+00	5.27E+02	2.40E-01	2.77E+00
Formate	2.57E-15	9.66E-16	2.14E-12	1.01E-07	0.00E+00	0.00E+00	1.01E-07	4.58E-11	5.30E-10
Acetate	1.99E-15	9.82E-16	2.17E-12	1.02E-07	0.00E+00	0.00E+00	1.02E-07	4.66E-11	5.39E-10
Glycolate	1.33E-14	8.31E-15	1.84E-11	5.03E-08	0.00E+00	0.00E+00	5.03E-08	2.29E-11	2.65E-10
IDA	6.21E-15	6.90E-15	1.53E-11	1.28E-07	0.00E+00	0.00E+00	1.29E-07	5.84E-11	6.76E-10
Citrate	5.68E-16	9.11E-16	2.01E-12	1.10E-07	0.00E+00	0.00E+00	1.10E-07	5.02E-11	5.81E-10
HEDTA	2.66E-15	6.18E-15	1.37E-11	9.04E-08	0.00E+00	0.00E+00	9.04E-08	4.11E-11	4.76E-10
EDTA	3.20E-16	7.80E-16	1.72E-12	9.72E-08	0.00E+00	0.00E+00	9.72E-08	4.42E-11	5.11E-10

Rad. Comp	Aqueous Rad. Comp			Solids Rad. Comp (1)			Total Rad. Comp (1)		
Unit	Ci/L	Ci/day	Lb/day	Ci/L	Ci/day	Lb/day	Ci/L	Ci/day	Lb/day
Total	1.60E+01	1.34E+05	5.13E+00	1.43E+01	1.19E+05	8.72E+02	3.03E+01	2.53E+05	8.77E+02
^{241}Am	5.44E-05	4.56E-01	2.93E-04	1.03E-01	8.61E+02	5.54E-01	1.03E-01	8.61E+02	5.54E-01
^{243}Am	3.56E-08	2.98E-04	3.29E-06	8.31E-06	6.96E-02	7.69E-04	8.35E-06	6.99E-02	7.72E-04
^{14}C	1.12E-06	9.35E-03	4.62E-06	7.26E-06	6.08E-02	3.00E-05	8.38E-06	7.01E-02	3.46E-05
^{60}Co	7.33E-06	6.14E-02	1.20E-07	1.14E-02	9.51E+01	1.85E-04	1.14E-02	9.52E+01	1.85E-04
^{243}Cm	5.90E-09	4.94E-05	2.15E-09	1.44E-04	1.20E+00	5.25E-05	1.44E-04	1.20E+00	5.25E-05
^{244}Cm	1.40E-07	1.17E-03	3.18E-08	3.27E-03	2.74E+01	7.45E-04	3.27E-03	2.74E+01	7.45E-04
^{137}Cs	1.60E+01	1.34E+05	3.40E+00	2.29E+00	1.92E+04	4.87E-01	1.83E+01	1.53E+05	3.89E+00
^{152}Eu	4.09E-07	3.43E-03	4.35E-08	5.47E-04	4.58E+00	5.81E-05	5.47E-04	4.58E+00	5.81E-05
^{154}Eu	8.49E-05	7.10E-01	5.80E-06	5.92E-02	4.96E+02	4.05E-03	5.93E-02	4.97E+02	4.05E-03
^{155}Eu	2.45E-05	2.05E-01	9.33E-07	8.77E-03	7.34E+01	3.33E-04	8.80E-03	7.37E+01	3.34E-04
^{3}H	2.40E-05	2.01E-01	4.60E-08	1.80E-04	1.51E+00	3.45E-07	2.04E-04	1.71E+00	3.91E-07
^{129}I	3.42E-08	2.87E-04	3.58E-03	3.58E-07	3.00E-03	3.74E-02	3.93E-07	3.29E-03	4.10E-02
^{63}Ni	1.31E-04	1.10E+00	4.27E-05	1.97E-03	1.65E+01	6.39E-04	2.10E-03	1.76E+01	6.82E-04
^{237}Np	4.33E-08	3.62E-04	1.13E-03	8.41E-05	7.04E-01	2.20E+00	8.42E-05	7.05E-01	2.20E+00
^{238}Pu	2.44E-07	2.04E-03	2.62E-07	3.99E-04	3.34E+00	4.30E-04	4.00E-04	3.35E+00	4.31E-04
^{239}Pu	3.37E-06	2.82E-02	1.00E-03	3.54E-03	2.96E+01	1.05E+00	3.54E-03	2.96E+01	1.05E+00
^{240}Pu	8.73E-07	7.31E-03	7.10E-05	9.33E-04	7.81E+00	7.59E-02	9.34E-04	7.82E+00	7.60E-02
^{241}Pu	1.83E-05	1.53E-01	3.28E-06	2.51E-02	2.10E+02	4.49E-03	2.51E-02	2.10E+02	4.49E-03
^{242}Pu	9.24E-11	7.74E-07	4.33E-07	8.60E-08	7.20E-04	4.03E-04	8.61E-08	7.21E-04	4.03E-04
^{125}Sb	5.07E-05	4.24E-01	9.02E-07	3.63E-02	3.04E+02	6.46E-04	3.64E-02	3.05E+02	6.47E-04
^{151}Sm	7.11E-04	5.95E+00	4.99E-04	4.40E-01	3.68E+03	3.09E-01	4.41E-01	3.69E+03	3.09E-01
^{126}Sn	8.06E-07	6.75E-03	1.31E-03	1.70E-04	1.43E+00	2.77E-01	1.71E-04	1.43E+00	2.78E-01
^{90}Sr	1.76E-02	1.47E+02	2.35E-03	1.13E+01	9.42E+04	1.50E+00	1.13E+01	9.44E+04	1.51E+00
^{99}Tc	1.41E-04	1.18E+00	1.53E-01	2.54E-02	2.12E+02	2.76E+01	2.55E-02	2.14E+02	2.78E+01
^{232}Th	1.31E-09	1.10E-05	2.20E-01	2.78E-06	2.33E-02	4.67E+02	2.79E-06	2.33E-02	4.67E+02
^{233}U	4.38E-08	3.67E-04	8.39E-05	2.28E-04	1.91E+00	4.37E-01	2.28E-04	1.91E+00	4.37E-01
^{234}U	3.11E-08	2.60E-04	9.24E-05	1.18E-05	9.92E-02	3.52E-02	1.19E-05	9.95E-02	3.53E-02
^{235}U	1.23E-09	1.03E-05	1.05E-02	2.85E-07	2.38E-03	2.43E+00	2.86E-07	2.39E-03	2.44E+00
^{236}U	2.10E-09	1.76E-05	5.99E-04	3.91E-07	3.28E-03	1.12E-01	3.93E-07	3.29E-03	1.12E-01
^{238}U	2.43E-08	2.03E-04	1.33E+00	6.70E-06	5.61E-02	3.68E+02	6.73E-06	5.63E-02	3.70E+02

(1) All radionuclides in gaseous streams are assumed to exist as solid particulate.

CAS Comp	Organic Components				
Unit	mol/L	Lb/gal	Lb/day	Mt/day	g/sec
Total	1.51E-02	1.17E-02	2.58E+01	1.17E-02	1.36E-01
50-32-8	7.13E-05	1.50E-04	3.32E-01	1.51E-04	1.75E-03
56-23-5	4.73E-25	6.07E-25	1.34E-21	6.10E-25	7.07E-24
57-14-7	4.82E-06	2.42E-06	5.35E-03	2.43E-06	2.81E-05
58-90-2	2.45E-06	4.74E-06	1.05E-02	4.76E-06	5.51E-05
59-89-2	7.23E-13	7.00E-13	1.55E-09	7.04E-13	8.15E-12
60-35-5	6.93E-05	3.42E-05	7.56E-02	3.44E-05	3.98E-04
62-75-9	8.91E-05	5.51E-05	1.22E-01	5.54E-05	6.41E-04
64-19-7	5.04E-10	2.53E-10	5.59E-07	2.54E-10	2.94E-09
71-43-2	2.15E-18	1.40E-18	3.10E-15	1.41E-18	1.63E-17
75-05-8	1.18E-07	4.06E-08	8.98E-05	4.08E-08	4.72E-07
75-12-7	5.43E-04	2.04E-04	4.52E-01	2.05E-04	2.38E-03
78-15-3	0.00E+00	0.00E+00	0.00E+00	0.00E+00	0.00E+00
79-01-6	6.16E-20	6.75E-20	1.49E-16	6.79E-20	7.85E-19
83-32-9	5.39E-13	6.94E-13	1.54E-09	6.98E-13	8.08E-12
84-66-2	7.97E-05	1.48E-04	3.27E-01	1.49E-04	1.72E-03
84-74-2	2.82E-05	6.54E-05	1.45E-01	6.57E-05	7.61E-04
87-68-3	2.16E-20	4.69E-20	1.04E-16	4.72E-20	5.46E-19
88-89-1	1.07E-04	2.05E-04	4.52E-01	2.06E-04	2.38E-03
91-20-3	1.14E-12	1.22E-12	2.70E-09	1.23E-12	1.42E-11
95-50-1	3.77E-14	4.62E-14	1.02E-10	4.65E-14	5.38E-13
98-86-2	2.31E-06	2.32E-06	5.13E-03	2.33E-06	2.70E-05
100-21-0	1.55E-04	2.15E-04	4.76E-01	2.16E-04	2.50E-03
101-84-8	8.15E-14	1.16E-13	2.56E-10	1.16E-13	1.35E-12
106-93-4	2.17E-13	3.40E-13	7.52E-10	3.42E-13	3.96E-12
106-97-8	0.00E+00	0.00E+00	0.00E+00	0.00E+00	0.00E+00
106-99-0	0.00E+00	0.00E+00	0.00E+00	0.00E+00	0.00E+00
108-87-2	0.00E+00	0.00E+00	0.00E+00	0.00E+00	0.00E+00
108-88-3	5.32E-19	4.09E-19	9.04E-16	4.11E-19	4.76E-18
108-95-2	2.35E-04	1.85E-04	4.09E-01	1.86E-04	2.15E-03
110-54-3	0.00E+00	0.00E+00	0.00E+00	0.00E+00	0.00E+00
110-82-7	0.00E+00	0.00E+00	0.00E+00	0.00E+00	0.00E+00
111-84-2	0.00E+00	0.00E+00	0.00E+00	0.00E+00	0.00E+00
120-12-7	4.62E-08	6.87E-08	1.52E-04	6.90E-08	7.99E-07
120-82-1	1.06E-14	1.60E-14	3.53E-11	1.61E-14	1.86E-13
122-39-4	5.81E-06	8.21E-06	1.82E-02	8.25E-06	9.55E-05
126-73-8	6.43E-05	1.43E-04	3.16E-01	1.44E-04	1.66E-03
127-18-4	8.14E-25	1.13E-24	2.49E-21	1.13E-24	1.31E-23
129-00-0	1.94E-06	3.27E-06	7.23E-03	3.29E-06	3.81E-05
132-64-9	5.61E-10	7.88E-10	1.74E-06	7.92E-10	9.17E-09
144-62-7	1.36E-02	1.02E-02	2.26E+01	1.03E-02	1.19E-01
193-39-5	1.16E-11	2.68E-11	5.94E-08	2.70E-11	3.12E-10
206-44-0	4.14E-13	6.99E-13	1.54E-09	7.02E-13	8.13E-12
208-96-8	6.06E-09	7.70E-09	1.70E-05	7.74E-09	8.96E-08
603-34-9	5.59E-06	1.15E-05	2.53E-02	1.15E-05	1.33E-04
621-64-7	6.43E-13	6.98E-13	1.54E-09	7.02E-13	8.13E-12
1321-64-8	2.77E-13	6.95E-13	1.54E-09	6.99E-13	8.09E-12
1336-36-3	7.39E-12	1.99E-11	4.39E-08	2.00E-11	2.31E-10
3697-24-3	3.46E-13	6.99E-13	1.55E-09	7.03E-13	8.14E-12
4170-30-3	1.13E-06	6.63E-07	1.47E-03	6.67E-07	7.72E-06
10061-01-5	1.54E-16	1.43E-16	3.16E-13	1.44E-16	1.66E-15
26140-60-3	3.63E-13	6.98E-13	1.54E-09	7.01E-13	8.12E-12

Stream Number: HOP10
Stream Name: HLW vessel ventilation header offgas
Configuration: MRQ-05-0049.acmf
Run Date / Time: 12/14/2005 - 1:42:25 PM
Run Data File: H:\ACM v3.1\MRQ-05-0049\MRQ_05_0049A_Streams.csv

Stream Properties			
Variable	Value	Units	
Density	1.15E-03	g/cm^3	(does not include solid phase)
Enthalpy	-1.25E+05	BTU/hr	
Mass Flow	1.15E+03	Lb/hr	
	2.76E+04	Lb/day	
Volumetric Flow	2.00E+03	GPM	(does not include solid phase)
	2.67E+02	ft^3/min	(does not include solid phase)
Molar Flow	4.03E+01	Lbmol/hr	
Molecular Weight	2.85E+01	Lb/Lbmol	
Pressure	1.00E+03	mbar	
Temperature	2.55E+01	C	
Na Molarity	0.00E+00	mol/L	
pH	5.25E+00	pH	
Total TRU	2.10E-11	Ci/L	
Total Activity	4.66E-09	Ci/L	

Component	Aqueous Comp			Solid Comp	Gaseous (1)		Total Comp		
Unit	mol/L	Lb/gal	Lb/day	Lb/day	mol/L	Lb/day	Lb/day	mt/day	g/sec
Total	4.95E-07	7.58E-08	2.18E-01	3.02E-03	4.03E-02	2.76E+04	2.76E+04	1.25E+01	1.45E+02
Ag^+	8.93E-16	8.04E-16	2.31E-09	7.25E-07	0.00E+00	0.00E+00	7.27E-07	3.31E-10	3.83E-09
Al^{+3}	1.08E-11	2.43E-12	7.00E-08	1.20E-04	0.00E+00	0.00E+00	1.27E-04	5.78E-08	6.69E-07
As^{+3}	3.94E-15	2.46E-15	7.08E-09	4.67E-08	0.00E+00	0.00E+00	5.37E-08	2.44E-11	2.83E-10
B^{+3}	6.05E-12	5.46E-13	1.57E-06	6.62E-05	0.00E+00	0.00E+00	6.78E-05	3.08E-08	3.57E-07
Ba^{+2}	8.21E-16	9.41E-16	2.71E-09	6.46E-07	0.00E+00	0.00E+00	6.49E-07	2.95E-10	3.41E-09
Bi^{+3}	9.65E-16	1.68E-15	4.84E-09	3.39E-06	0.00E+00	0.00E+00	3.40E-06	1.54E-09	1.79E-08
Ca^{+2}	5.88E-14	1.97E-14	5.66E-08	3.95E-06	0.00E+00	0.00E+00	4.00E-06	1.82E-09	2.11E-08
Cd^{+2}	1.52E-15	1.43E-15	4.10E-09	2.62E-06	0.00E+00	0.00E+00	2.63E-06	1.19E-09	1.38E-08
Ce^{+3}	6.97E-11	8.15E-11	2.35E-04	8.05E-07	0.00E+00	0.00E+00	2.35E-04	1.07E-07	1.24E-06
Cl^-	3.29E-11	9.73E-12	2.80E-05	7.84E-07	0.00E+00	0.00E+00	2.88E-05	1.31E-08	1.51E-07
CO	9.78E-111	2.29E-111	6.57E-105	0.00E+00	0.00E+00	0.00E+00	6.57E-105	2.99E-108	3.46E-107
CO_2	7.54E-16	2.77E-16	7.96E-10	0.00E+00	1.18E-32	1.24E-26	7.96E-10	3.82E-13	4.19E-12
CO_3^{-2}	8.65E-12	4.33E-12	1.25E-05	2.19E-04	0.00E+00	0.00E+00	2.31E-04	1.05E-07	1.22E-06
Cr^{+3}	5.22E-12	2.27E-12	6.52E-06	2.02E-06	0.00E+00	0.00E+00	8.54E-06	3.88E-09	4.49E-08
Cu^{+2}	1.51E-15	8.00E-16	2.30E-09	2.74E-07	0.00E+00	0.00E+00	2.76E-07	1.26E-10	1.45E-09
F^-	1.16E-12	1.84E-13	5.30E-07	1.43E-05	0.00E+00	0.00E+00	1.48E-05	6.72E-09	7.78E-08
Fe^{+3}	1.73E-11	8.07E-12	2.32E-05	1.16E-04	0.00E+00	0.00E+00	1.39E-04	6.33E-08	7.32E-07
H_2O	4.85E-07	7.29E-08	2.10E-01	0.00E+00	1.21E-03	5.22E+02	5.22E+02	2.37E-01	2.74E+00
$H_2O(b)$	0.00E+00	0.00E+00	0.00E+00	0.00E+00	0.00E+00	0.00E+00	0.00E+00	0.00E+00	0.00E+00
H^+	2.73E-12	2.29E-14	6.60E-08	0.00E+00	0.00E+00	0.00E+00	6.60E-08	3.00E-11	3.47E-10
HCL	0.00E+00	0.00E+00	0.00E+00	0.00E+00	0.00E+00	0.00E+00	0.00E+00	0.00E+00	0.00E+00
HCO3-	6.88E-15	3.50E-15	1.01E-08	0.00E+00	0.00E+00	0.00E+00	1.01E-08	4.58E-12	5.30E-11
H2CO3	0.00E+00	0.00E+00	0.00E+00	0.00E+00	0.00E+00	0.00E+00	0.00E+00	0.00E+00	0.00E+00
HF	0.00E+00	0.00E+00	0.00E+00	0.00E+00	0.00E+00	0.00E+00	0.00E+00	0.00E+00	0.00E+00
Hg^{+2}	1.58E-15	2.65E-15	7.61E-09	1.55E-06	0.00E+00	0.00E+00	1.55E-06	7.06E-10	8.17E-09
HNO_3	0.00E+00	0.00E+00	0.00E+00	0.00E+00	0.00E+00	0.00E+00	0.00E+00	0.00E+00	0.00E+00
K^-	4.51E-12	1.47E-12	4.23E-06	2.22E-06	0.00E+00	0.00E+00	6.45E-06	2.93E-09	3.40E-08
La^{+3}	4.19E-16	4.85E-16	1.40E-09	1.21E-06	0.00E+00	0.00E+00	1.21E-06	5.52E-10	6.39E-09
Li^+	7.45E-14	4.31E-15	1.24E-08	2.81E-05	0.00E+00	0.00E+00	2.81E-05	1.28E-08	1.48E-07
Mg^{+2}	1.24E-14	2.53E-15	7.26E-09	9.77E-07	0.00E+00	0.00E+00	9.85E-07	4.48E-10	5.18E-09
Mn^{+3}	1.35E-14	6.19E-15	1.78E-08	9.48E-06	0.00E+00	0.00E+00	9.50E-06	4.32E-09	5.00E-08
MnO_4^-	0.00E+00	0.00E+00	0.00E+00	0.00E+00	0.00E+00	0.00E+00	0.00E+00	0.00E+00	0.00E+00
N_2	3.51E-13	8.20E-14	2.36E-07	0.00E+00	3.09E-02	2.07E+04	2.07E+04	9.43E+00	1.09E+02
Na^+	4.70E-09	9.02E-10	2.59E-03	1.74E-04	0.00E+00	0.00E+00	2.77E-03	1.26E-06	1.46E-05
NH3	5.72E-13	8.13E-14	2.34E-07	0.00E+00	0.00E+00	0.00E+00	2.34E-07	1.06E-10	1.23E-09
NH4+	4.59E-14	8.13E-14	1.99E-08	0.00E+00	0.00E+00	0.00E+00	1.99E-08	9.03E-12	1.04E-10
Ni^{+2}	2.36E-12	1.16E-12	3.33E-06	4.22E-06	0.00E+00	0.00E+00	7.55E-06	3.43E-09	3.97E-08
NO	6.16E-36	1.54E-36	4.44E-30	0.00E+00	0.00E+00	0.00E+00	4.44E-30	2.02E-33	2.33E-32
NO_2	8.69E-49	3.34E-49	9.59E-43	0.00E+00	0.00E+00	0.00E+00	9.59E-43	4.36E-46	5.05E-45
NO_2^-	2.35E-11	9.01E-12	2.59E-05	3.97E-05	0.00E+00	0.00E+00	6.56E-05	2.98E-08	3.45E-07
NO_3^-	3.14E-09	1.62E-09	4.67E-03	3.06E-05	0.00E+00	0.00E+00	4.70E-03	2.14E-06	2.47E-05
O_2	1.13E-13	3.02E-14	8.69E-08	0.00E+00	8.20E-03	6.30E+03	6.30E+03	2.86E+00	3.31E+01
O^-	0.00E+00	0.00E+00	0.00E+00	1.91E-04	0.00E+00	0.00E+00	1.91E-04	8.68E-08	1.00E-06
OH^-	1.80E-09	2.55E-10	7.33E-04	6.28E-04	0.00E+00	0.00E+00	1.36E-03	6.19E-07	7.16E-06
OH(b)	2.39E-11	3.40E-12	9.77E-06	3.96E-26	0.00E+00	0.00E+00	9.77E-06	4.44E-09	5.14E-08
Pb^{+2}	5.52E-15	9.54E-15	2.74E-08	5.54E-06	0.00E+00	0.00E+00	5.57E-06	2.53E-09	2.93E-08
Pd^{+2}	4.27E-16	3.79E-16	1.09E-09	2.27E-07	0.00E+00	0.00E+00	2.29E-07	1.04E-10	1.20E-09
PO_4^{-3}	4.42E-13	3.50E-13	1.01E-06	2.50E-05	0.00E+00	0.00E+00	2.60E-05	1.18E-08	1.37E-07
Resin	0.00E+00	0.00E+00	0.00E+00	0.00E+00	0.00E+00	0.00E+00	0.00E+00	0.00E+00	0.00E+00
Rh^{+3}	4.13E-16	3.54E-16	1.02E-09	7.36E-08	0.00E+00	0.00E+00	7.46E-08	3.39E-11	3.93E-10
Ru^{+3}	6.13E-16	5.17E-16	1.49E-09	6.83E-07	0.00E+00	0.00E+00	6.84E-07	3.11E-10	3.60E-09
S^{+6}	0.00E+00	0.00E+00	0.00E+00	1.70E-23	0.00E+00	0.00E+00	1.70E-23	7.75E-27	8.97E-26
SiO2	8.35E-14	4.19E-14	1.20E-07	1.26E-03	0.00E+00	0.00E+00	1.26E-03	5.72E-07	6.63E-06
SiO_4^{-4}	6.38E-26	4.90E-26	1.41E-19	4.37E-13	0.00E+00	0.00E+00	4.37E-13	1.99E-16	2.30E-15
SO_2	9.36E-52	5.00E-52	1.44E-45	0.00E+00	0.00E+00	0.00E+00	1.44E-45	8.54E-49	7.57E-48
SO_4^{-2}	1.05E-12	8.45E-13	2.43E-06	9.18E-06	0.00E+00	0.00E+00	1.16E-05	5.28E-09	6.11E-08
Sr^{+2}	2.77E-16	2.02E-16	5.82E-10	3.61E-07	0.00E+00	0.00E+00	3.62E-07	1.64E-10	1.90E-09
Sucrose	0.00E+00	0.00E+00	0.00E+00	0.00E+00	0.00E+00	0.00E+00	0.00E+00	0.00E+00	0.00E+00
Ti^{+4}	6.88E-16	2.75E-16	7.91E-10	6.11E-07	0.00E+00	0.00E+00	6.11E-07	2.78E-10	3.22E-09
Zn^{+2}	2.57E-15	1.40E-15	4.04E-09	3.07E-05	0.00E+00	0.00E+00	3.07E-05	1.40E-08	1.62E-07
Zr^{+4}	1.90E-15	1.45E-15	4.16E-09	2.92E-05	0.00E+00	0.00E+00	2.92E-05	1.33E-08	1.54E-07

Components	Aqueous Comp			Solid Comp	Gaseous		Total Comp		
Unit	mol/L	Lb/gal	Lb/day	Lb/day	mol/L	Lb/day	Lb/day	Mt/day	g/sec
Total	5.56E-13	4.08E-13	1.17E-06	1.09E-04	0.00E+00	0.00E+00	1.10E-04	5.01E-08	5.80E-07
$C_2O_4^{-2}$	5.56E-13	4.08E-13	1.17E-06	1.09E-04	0.00E+00	0.00E+00	1.10E-04	5.01E-08	5.80E-07
Formate	3.96E-25	1.49E-25	4.27E-19	2.02E-14	0.00E+00	0.00E+00	2.02E-14	9.17E-18	1.06E-16
Acetate	3.07E-25	1.51E-25	4.34E-19	2.05E-14	0.00E+00	0.00E+00	2.05E-14	9.32E-18	1.08E-16
Glycolate	2.04E-24	1.28E-24	3.68E-18	1.01E-14	0.00E+00	0.00E+00	1.01E-14	4.58E-18	5.30E-17
IDA	9.56E-25	1.06E-24	3.05E-18	2.57E-14	0.00E+00	0.00E+00	2.57E-14	1.17E-17	1.35E-16
Citrate	8.73E-26	1.40E-25	4.03E-19	2.21E-14	0.00E+00	0.00E+00	2.21E-14	1.00E-17	1.16E-16
HEDTA	4.09E-25	9.50E-25	2.73E-18	1.81E-14	0.00E+00	0.00E+00	1.81E-14	8.22E-18	9.52E-17
EDTA	4.92E-26	1.20E-25	3.45E-19	1.94E-14	0.00E+00	0.00E+00	1.94E-14	8.84E-18	1.02E-16

Rad. Comp	Aqueous Rad. Comp			Solids Rad. Comp (1)			Total Rad. Comp (1)		
Unit	Ci/L	Ci/day	Lb/day	Ci/L	Ci/day	Lb/day	Ci/L	Ci/day	Lb/day
Total	2.46E-09	2.68E-02	1.03E-06	2.20E-09	2.39E-02	1.75E-04	4.66E-09	5.07E-02	1.76E-04
^{241}Am	8.37E-15	9.11E-08	5.86E-11	1.58E-11	1.72E-04	1.11E-07	1.58E-11	1.72E-04	1.11E-07
^{243}Am	5.47E-18	5.95E-11	6.58E-13	1.28E-15	1.39E-08	1.54E-10	1.28E-15	1.40E-08	1.54E-10
^{14}C	1.72E-16	1.87E-09	9.23E-13	1.12E-15	1.22E-08	6.00E-12	1.29E-15	1.40E-08	6.92E-12
^{60}Co	1.13E-15	1.23E-08	2.39E-14	1.75E-12	1.90E-05	3.71E-11	1.75E-12	1.90E-05	3.71E-11
^{243}Cm	9.07E-19	9.87E-12	4.31E-16	2.21E-14	2.41E-07	1.05E-11	2.21E-14	2.41E-07	1.05E-11
^{244}Cm	2.15E-17	2.34E-10	6.37E-15	5.03E-13	5.47E-06	1.49E-10	5.03E-13	5.48E-06	1.49E-10
^{137}Cs	2.46E-09	2.68E-02	6.80E-07	3.57E-10	3.89E-03	9.87E-08	2.82E-09	3.07E-02	7.78E-07
^{152}Eu	6.30E-17	6.86E-10	8.70E-15	8.41E-14	9.16E-07	1.16E-11	8.42E-14	9.17E-07	1.16E-11
^{154}Eu	1.31E-14	1.42E-07	1.16E-12	9.12E-12	9.92E-05	8.10E-10	9.13E-12	9.94E-05	8.11E-10
^{155}Eu	3.77E-15	4.11E-08	1.67E-13	1.35E-12	1.47E-05	6.67E-11	1.35E-12	1.47E-05	6.69E-11
^{3}H	3.68E-15	4.01E-08	9.20E-15	2.84E-14	3.10E-07	7.11E-14	3.21E-14	3.50E-07	8.03E-14
^{129}I	5.27E-18	5.73E-11	7.16E-10	5.54E-17	6.03E-10	7.52E-09	6.06E-17	6.60E-10	8.24E-09
^{63}Ni	2.02E-14	2.20E-07	8.54E-12	3.03E-13	3.30E-06	1.28E-10	3.23E-13	3.52E-06	1.37E-10
^{237}Np	6.65E-18	7.24E-11	2.27E-10	1.29E-14	1.41E-07	4.41E-07	1.30E-14	1.41E-07	4.41E-07
^{238}Pu	3.75E-17	4.08E-10	5.25E-14	6.15E-14	6.69E-07	8.61E-11	6.15E-14	6.70E-07	8.62E-11
^{239}Pu	5.18E-16	5.64E-09	2.00E-10	5.44E-13	5.93E-06	2.11E-07	5.45E-13	5.93E-06	2.11E-07
^{240}Pu	1.34E-16	1.46E-09	1.42E-11	1.44E-13	1.56E-06	1.52E-08	1.44E-13	1.57E-06	1.52E-08
^{238}U	3.73E-18	4.07E-11	2.67E-07	1.03E-15	1.12E-08	7.37E-05	1.04E-15	1.13E-08	7.40E-05

(1) All radionuclides in gaseous streams are assumed to exist as solid particulate.

CAS Comp	Organic Components				
Unit	mol/L	Lb/gal	Lb/day	Mt/day	g/sec
Total	4.14E-09	4.96E-09	1.43E-02	6.49E-06	7.51E-05
50-32-8	2.29E-10	4.82E-10	1.39E-03	6.31E-07	7.30E-06
56-23-5	2.92E-25	3.76E-25	1.08E-18	4.91E-22	5.68E-21
57-14-7	4.33E-10	2.17E-10	6.24E-04	2.84E-07	3.28E-06
58-90-2	1.55E-10	3.00E-10	8.62E-04	3.92E-07	4.53E-06
59-89-2	1.63E-14	1.58E-14	4.54E-08	2.06E-11	2.39E-10
60-35-5	5.43E-12	2.68E-12	7.69E-06	3.50E-09	4.05E-08
62-75-9	1.14E-09	7.05E-10	2.03E-03	9.22E-07	1.07E-05
64-19-7	1.14E-11	5.70E-12	1.64E-05	7.45E-09	8.62E-08
71-43-2	1.15E-18	7.47E-19	2.15E-12	9.76E-16	1.13E-14
75-05-8	3.09E-11	1.06E-11	3.04E-05	1.38E-08	1.60E-07
75-12-7	5.31E-12	2.00E-12	5.74E-06	2.61E-09	3.02E-08
76-15-3	0.00E+00	0.00E+00	0.00E+00	0.00E+00	0.00E+00
79-01-6	9.82E-20	1.08E-19	3.10E-13	1.41E-16	1.63E-15
83-32-9	1.22E-14	1.56E-14	4.50E-08	2.05E-11	2.37E-10
84-66-2	3.42E-10	6.34E-10	1.82E-03	8.29E-07	9.59E-06
84-74-2	3.58E-10	8.33E-10	2.39E-03	1.09E-06	1.26E-05
87-68-3	3.80E-20	8.26E-20	2.38E-13	1.08E-16	1.25E-15
88-89-1	1.27E-14	2.44E-14	7.01E-08	3.19E-11	3.69E-10
91-20-3	7.07E-15	7.56E-15	2.18E-08	9.89E-12	1.14E-10
95-50-1	8.49E-16	1.04E-15	3.00E-09	1.36E-12	1.58E-11
98-86-2	1.72E-10	1.73E-10	4.97E-04	2.26E-07	2.61E-06
100-21-0	4.23E-16	5.86E-16	1.69E-09	7.66E-13	8.87E-12
101-84-8	1.84E-15	2.61E-15	7.50E-09	3.41E-12	3.95E-11
106-93-4	2.56E-15	4.02E-15	1.16E-08	5.25E-12	6.08E-11
106-97-8	0.00E+00	0.00E+00	0.00E+00	0.00E+00	0.00E+00
106-99-0	0.00E+00	0.00E+00	0.00E+00	0.00E+00	0.00E+00
108-87-2	0.00E+00	0.00E+00	0.00E+00	0.00E+00	0.00E+00
108-88-3	4.01E-19	3.08E-19	8.86E-13	4.03E-16	4.66E-15
108-95-2	5.50E-10	4.32E-10	1.24E-03	5.64E-07	6.53E-06
110-54-3	0.00E+00	0.00E+00	0.00E+00	0.00E+00	0.00E+00
110-82-7	0.00E+00	0.00E+00	0.00E+00	0.00E+00	0.00E+00
111-84-2	0.00E+00	0.00E+00	0.00E+00	0.00E+00	0.00E+00
120-12-7	2.03E-11	3.02E-11	8.68E-05	3.95E-08	4.57E-07
120-82-1	4.47E-16	6.77E-16	1.95E-09	8.85E-13	1.02E-11
122-39-4	1.39E-10	1.97E-10	5.65E-04	2.57E-07	2.97E-06
126-73-8	6.78E-11	1.51E-10	4.33E-04	1.97E-07	2.28E-06
127-18-4	1.68E-23	2.33E-23	6.71E-17	3.05E-20	3.53E-19
129-00-0	1.67E-10	2.82E-10	8.10E-04	3.68E-07	4.26E-06
132-64-9	1.25E-12	1.75E-12	5.04E-06	2.29E-09	2.65E-08
144-62-7	1.37E-11	1.03E-11	2.95E-05	1.34E-08	1.55E-07
193-39-5	2.62E-13	6.05E-13	1.74E-06	7.91E-10	9.15E-09
206-44-0	9.33E-15	1.57E-14	4.53E-08	2.06E-11	2.38E-10
208-96-8	6.08E-12	7.73E-12	2.22E-05	1.01E-08	1.17E-07
603-34-9	2.15E-10	4.40E-10	1.27E-03	5.76E-07	6.66E-06
621-64-7	1.45E-14	1.57E-14	4.53E-08	2.06E-11	2.38E-10
1321-64-8	6.25E-15	1.57E-14	4.51E-08	2.05E-11	2.37E-10
1336-36-3	4.19E-14	1.13E-13	3.24E-07	1.47E-10	1.70E-09
3697-24-3	7.79E-15	1.58E-14	4.53E-08	2.06E-11	2.38E-10
4170-30-3	7.88E-11	4.61E-11	1.33E-04	6.02E-08	6.97E-07
10061-01-5	2.12E-17	1.96E-17	5.64E-11	2.56E-14	2.97E-13
26140-60-3	8.18E-15	1.57E-14	4.52E-08	2.06E-11	2.38E-10

Appendix B

Calculation: Estimation of Non-SSFM Represented Organic Emission Rates Required to Support the Integrated Emissions Baseline Report

24590-WTP-M4C-FRP-00005, Rev C

This page intentionally left blank.

Calculation Cover Sheet

R10664579

ISSUED BY
RPP-WTP PDC

RIVER PROTECTION PROJECT-WASTE TREATMENT PLANT		JOB NO.: 24590	
CALC NO. 24590-WTP-M4C-FRP-00005	GROUP Process Eng.		FACILITY Central
SUBJECT Estimation of Non-SSFM Represented Organic Emission Rates Required to Support the Integrated Emissions Baseline Report			
CALCULATION STATUS DESIGNATION	☒ PRELIMINARY ☐ SUPERSEDED	☐ COMMITTED BY:	☐ CONFIRMED ☐ CANCELLED
SOFTWARE APPLICATIONS ☒ N/A			
QAS: ☐ YES ☐ NO	PROGRAM NAME:		VERSION/RELEASE NO.:

RECORD OF REVISIONS

NO.	REASON FOR REVISION	TOTAL NO. OF SHEETS	LAST SHEET NO.	ORIGINATOR	CHECKED	APPROVED/ ACCEPTED	DATE
A	Initial Issue	102	102	E. Berrios	J. Cook/C. Nguyen/R. Rieck	O. Block	05/21/03
B	Revision to incorporate new emissions profile	104	B-27	E. Berrios	J. Cook/C. Leung	O. Block	12/12/03
C	Revision to incorporate new emissions profile	90	B-19	E. Berrios	J. Cook	S. Saunders	01/27/06

Notes/Comments

Calculations were performed on a Compaq Personal Computer using the software Microsoft Excel® 2000.

This calculation does not affect any structures, systems, components, or services of the WTP.

This revision is a complete rewrite therefore no revision bars are used.

Contents

1 Objective 2
2 Inputs 2
3 Background 19
4 Applicable Codes and Standards 19
5 Methodology 20
6 Assumptions 21
7 Calculations 21
7.1 Feed Rate 22
7.2 Pretreatment Vessel Vent Analysis 22
7.3 Pretreatment PJM/RFD Analysis 25
7.4 LAW Vitrification Analysis 28
7.5 HLW Vitrification Analysis 34
7.6 HLW PJM/RFD Analysis 40
8 Results and Conclusion 43
9 References 46
10 Attachments 46
Attachment A - Stream Reports A-1
Attachment B - Calculations B-1

List of Tables

Table A-1 - PJV32 Stream Report A-2
Table A-2 - FRP01 Stream Report A-4
Table A-3 - FRP14 Stream Report A-6
Table A-4 - PVP01 Stream Report A-8
Table A-5 - PJV04 Stream Report A-10
Table A-6 - LMP06 Stream Report A-12
Table A-7 - LFP06 Stream Report A-14
Table A-8 - RLD32 Stream Report A-16
Table A-9 - RLD33 Stream Report A-18
Table A-10 - RLD34 Stream Report A-20

Table A-11 - HMP06 Stream Report **A-22**

Table A-12 - HOP10 Stream Report **A-24**

Table B-1 Feed Rate **B-2**

Table B-2 PVP01 - Unabated Pretreatment Vessel Vent System **B-4**

Table B-3 PVP12 - Abated Pretreatment Vessel Vent System **B-5**

Table B-4 PJV04 - Unabated Pretreatment PJM/RFD **B-6**

Table B-5 PJV11 - Abated Pretreatment PJM/RFD **B-7**

Table B-6 LMP06 - Unabated LAW Melter **B-9**

Table B-7 LVP01 - LAW Vessel Ventilation **B-10**

Table B-8 LVP18 - Abated LAW Melter Offgas System **B-11**

Table B-9 HMP06 - Unabated HLW Melter **B-13**

Table B-10 HOP10 - HLW Vessel Ventilation **B-14**

Table B-11 HOP31 - Abated HLW Melter Offgas System **B-15**

Table B-12 PJV32 - Unabated HLW PJM/RFD **B-17**

Table B-13 PJV34 - Abated HLW PJM/RFD **B-18**

1 Objective

The objective of this calculation is to estimate the air emission rates for all organic constituents that are not tracked through the Steady State Flowsheet Model (SSFM) to support the update of the *Integrated Emissions Baseline Report for the Hanford Tank Waste Treatment and Immobilization Plant* (24590-WTP-RPT-PO-03-008). The estimation of the releases is based on the performance of the representative compounds that are tracked in the SSFM.

2 Inputs

- Organic constituent feed concentrations were obtained from Section 8 of the *WTP Air Emissions Hazardous Organic Constituents Feed Concentrations* (24590-WTP-M4C-FRP-00006). These concentrations are shown below in units of milligrams per liter. The feed concentration of 1336-36-3 as shown in the table is 0.7 mg/l for LAW supernatant and for HLW, the concentration is 50 mg/kg (from Section 8.2.1 of 24590-WTP-RPT-PO-03-008). For oxalic acid (144-62-7), formic acid (64-18-6), and acetic acid (64-19-7), the feed concentrations as per Section 2 of 24590-WTP-M4C-FRP-00006 are 3,000 mg/l, 15,000 mg/l, and 21,704 mg/l respectively.

Organic Constituents Feed Concentrations

CAS #	COPC	Feed Concentration (mg/L)
100-00-5	p-Nitrochlorobenzene	40.0
100-21-0	p-Phthalic acid	60.0

CALCULATION SHEET

PROJECT: WTP
JOB NO.: 24590
CALC NO.: 24590-WTP-M4C-FRP-00005
SHEET REV: C
SHEET NO.: 3

BY: E. Berrios
DATE: 01/09/06

SUBJECT: Estimation of Non-SSFM Represented Organic Emission Rates Required to Support the Integrated Emissions Baseline Report

CAS #	COPC	Feed Concentration (mg/L)
100-41-4	Ethyl benzene	4.0
100-42-5	Styrene	4.0
10061-01-5	cis-1,3-Dichloropropene	4.0
10061-02-6	trans-1,3-Dichloropropene	4.0
101-55-3	4-Bromophenylphenyl ether	60.0
101-84-8	Diphenyl ether	10.0
106-35-4	3-Heptanone	4.0
106-42-3	p-Xylene (Dimethyl benzene)	10.0
106-46-7	1,4-Dichlorobenzene	4.0
106-88-7	1,2-Epoxybutane	10.0
106-93-4	Ethylene dibromide (Dibromethane)	4.0
106-97-8	Butane	10.0
106-99-0	1,3-Butadiene	4.0
107-02-8	Acrolein	10.0
107-05-1	3-Chloropropene (Allyl chloride)	4.0
107-06-2	1,2-Dichloroethane (Ethylene chloride)	4.0
107-12-0	Propionitrile	10.0
107-13-1	Acrylonitrile	20.0
107-18-6	2-Propene-1-ol	60.0
107-31-3	Formic acid, methyl ester	60.0
107-66-4	Dibutylphosphate	60.0
107-87-9	2-Pentanone	20.0
108-03-2	1-Nitropropane	60.0
108-05-4	Vinyl acetate	60.0
108-10-1	Hexone (4-Methyl-2-pentanone or MIBK)	10.0
108-20-3	Bis(isopropyl)ether	10.0
108-38-3	m-Xylene (Dimethyl benzene)	10.0
108-39-4	m-Cresol	10.0
108-87-2	Methylcyclohexane	10.0
108-88-3	Toluene	4.0
108-90-7	Chlorobenzene	4.0
108-93-0	Cyclohexanol	10.0
108-94-1	Cyclohexanone	10.0
108-95-2	Phenol	60.0
109-66-0	n-Pentane	10.0
109-99-9	Tetrahydrofuran	4.0
110-12-3	5-Methyl-2-hexanone	4.0
110-43-0	2-Heptanone	4.0
110-54-3	n-Hexane	10.0
110-62-3	n-Valeraldehyde	60.0
110-82-7	Cyclohexane	10.0
110-83-8	Cyclohexene	4.0

CALCULATION SHEET

PROJECT: WTP
JOB NO.: 24590
CALC NO.: 24590-WTP-M4C-FRP-00005
SHEET REV: C
SHEET NO.: 4

BY: E. Berrios
DATE: 01/09/06

SUBJECT: Estimation of Non-SSFM Represented Organic Emission Rates Required to Support the Integrated Emissions Baseline Report

CAS #	COPC	Feed Concentration (mg/L)
110-86-1	Pyridine	20.0
111-65-9	n-Octane	10.0
111-76-2	Ethylene glycol monobutyl ether	60.0
111-84-2	n-Nonane	10.0
117-81-7	Bis(2-ethylhexyl)phthalate (DEHP)	60.0
117-84-0	n-Dioctyl phthalate	60.0
120-12-7	Anthracene	60.0
120-82-1	1,2,4-Trichlorobenzene	10.0
120-83-2	2,4-Dichlorophenol	60.0
121-44-8	Triethylamine	10.0
121-69-7	Dimethylaniline	10.0
122-39-4	N,N-Diphenylamine	20.0
123-19-3	4-Heptanone	4.0
123-38-6	n-Propionaldehyde	20.0
123-51-3	3-Methyl-1-butanol	10.0
123-86-4	Acetic acid n-butyl ester	0.2
123-91-1	1,4-Dioxane	2.0
126-73-8	Tributyl phosphate	40.0
126-98-7	2-Methyl-2-propenenitrile (Methacrylonitrile)	10.0
127-18-4	Perchloroethylene (tetrachloroethylene)	4.0
127-19-5	N,N-Dimethylacetamide	10.0
128-37-0	2,6-Bis(tert-butyl)-4-methylphenol	20.0
129-00-0	Pyrene	60.0
1321-64-8	Pentachloronaphthalene	60.0
1321-65-9	Trichloronaphthalene	60.0
132-64-9	Dibenzofuran	60.0
1335-87-1	Hexachloronaphthalene	60.0
1335-88-2	Tetrachloronaphthalene	60.0
1336-36-3	Polychlorinated biphenyls (PCBs)	0.7*
141-78-6	Acetic acid ethyl ester (Ethyl acetate)	0.2
141-79-7	4-Methyl-3-penten-2-one	60.0
142-82-5	n-Heptane	10.0
156-60-5	trans-1,2-Dichloroethylene	10.0
1634-04-4	Methyl tert-butyl ether	10.0
189-55-9	Dibenzo[a,i]pyrene	60.0
189-64-0	Dibenzo[a,h]pyrene	60.0
191-24-2	Benzo(g,h,i)perylene	60.0
191-30-0	Benzo[a,i]pyrene	60.0
192-65-4	Dibenzo[a,e]pyrene	60.0
193-39-5	Indeno(1,2,3-cd)pyrene	60.0
206-44-0	Fluoranthene	60.0
208-96-8	Acenaphthylene	60.0

CALCULATION SHEET

PROJECT: WTP
JOB NO.: 24590
CALC NO.: 24590-WTP-M4C-FRP-00005
SHEET REV: C
SHEET NO.: 5

BY: E. Berrios
DATE: 01/09/06

SUBJECT: Estimation of Non-SSFM Represented Organic Emission Rates Required to Support the Integrated Emissions Baseline Report

CAS #	COPC	Feed Concentration (mg/L)
2234-13-1	Octachloronaphthalene	0.2
224-42-0	Dibenz[a,j]acridine	60.0
226-36-8	Dibenz[a,h]acridine	60.0
25551-13-7	Trimethyl benzene	10.0
26140-60-3	Terphenyls	60.0
27154-33-2	Trichlorofluoroethane	10.0
287-92-3	Cyclopentane	10.0
3697-24-3	5-Methylchrysene	60.0
3825-26-1	Ammonium perfluorooctanoate	60.0
4170-30-3	2-Butenaldehyde (2-Butenal or Crotonaldehyde)	10.0
50-00-0	Formaldehyde	10.0
50-32-8	Benzo(a)pyrene	38.0
53-70-3	Dibenzo(a,h)anthracene	38.0
540-59-0	1,2-Dichloroethylene	10.0
540-84-1	2,2,4-Trimethylpentane	10.0
541-73-1	1,3-Dichlorobenzene	4.0
56-23-5	Carbon tetrachloride	4.0
563-80-4	3-Methyl-2-butanone	10.0
56-49-5	3-Methylcholanthrene	60.0
57-14-7	1,1-Dimethylhydrazine	60.0
58-90-2	2,3,4,6-Tetrachlorophenol	60.0
591-78-6	2-Hexanone	10.0
59-50-7	4-Chloro-3-methylphenol	60.0
59-89-2	N-Nitrosomorpholine	60.0
602-87-9	5-Nitroacenaphthene	60.0
60-29-7	Ethyl ether	60.0
603-34-9	Triphenylamine	60.0
60-34-4	Methylhydrazine	10.0
60-35-5	Acetamide	10.0
621-64-7	Di-n-Propylnitrosamine (N-Nitroso-di-n-propylamine)	60.0
624-83-9	Methyl isocyanate	10.0
627-13-4	Nitric acid, propyl ester	5.0
62-75-9	N-Nitroso-N,N-dimethylamine (Dimethylnitrosamine)	60.0
630-20-6	1,1,1,2-Tetrachloroethane	10.0
64-17-5	Ethyl alcohol	10.0
67-56-1	Methyl alcohol (Methanol)	10.0
67-63-0	2-Propyl alcohol (Isopropanol; Propan-2-01)	2.0
67-64-1	2-Propanone (Acetone)	20.0
67-66-3	Chloroform	4.0
67-72-1	Hexachloroethane	60.0
684-16-2	Hexafluoroacetone	10.0
71-23-8	n-Propyl alcohol	4.0

CALCULATION SHEET

PROJECT: WTP
JOB NO.: 24590
CALC NO.: 24590-WTP-M4C-FRP-00005
SHEET REV: C
SHEET NO.: 6

BY: E. Berrios
DATE: 01/09/06

SUBJECT: Estimation of Non-SSFM Represented Organic Emission Rates Required to Support the Integrated Emissions Baseline Report

CAS #	COPC	Feed Concentration (mg/L)
71-36-3	n-Butyl alcohol	10.0
71-43-2	Benzene	4.0
71-55-6	Methyl chloroform (1,1,1-Trichloroethane)	4.0
74-83-9	Bromomethane (Methyl bromide)	4.0
74-87-3	Chloromethane (Methyl chloride)	4.0
74-97-5	Bromochloromethane	10.0
74-99-7	Methylacetylene	60.0
75-00-3	Chloroethane	4.0
75-01-4	Vinyl chloride (1-Chloroethene)	4.0
75-05-8	Acetonitrile	10.0
75-07-0	Acetaldehyde	60.0
75-09-2	Dichloromethane (Methylene chloride)	4.0
75-12-7	Formamide	60.0
75-15-0	Carbon disulfide	10.0
75-21-8	Ethylene oxide (Oxirane)	2.0
75-27-4	Bromodichloromethane	10.0
75-34-3	1,1-Dichloroethane	4.0
75-35-4	1,1-Dichloroethene (Vinylidene chloride)	10.0
75-43-4	Dichlorofluoromethane	4.0
75-45-6	Chlorodifluoromethane	4.0
75-50-3	Trimethylamine	10.0
75-52-5	Nitromethane	60.0
75-55-8	2-Methylaziridine	60.0
75-61-6	Difluorodibromomethane	10.0
75-63-8	Trifluorobromomethane	10.0
75-65-0	2-Methyl-2-propanol	10.0
75-69-4	Trichlorofluoromethane	10.0
75-71-8	Dichlorodifluoromethane	10.0
76-03-9	Trichloroacetic acid	10.0
76-11-9	1,1,1,2-Tetrachloro-2,2-difluoroethane	60.0
76-12-0	1,1,2,2-Tetrachloro-1,2-difluoroethane	60.0
76-13-1	1,2,2-Trichloro-1,1,2-trifluoroethane (Freon 113)	10.0
76-14-2	1,2-Dichloro-1,1,2,2-tetrafluoroethane	10.0
76-15-3	Chloropentafluoroethane	10.0
78-83-1	2-Methylpropyl alcohol (Isobutyl alcohol)	60.0
78-87-5	1,2-Dichloropropane	4.0
78-92-2	1-Methylpropyl alcohol (2-Butanol)	4.0
78-93-3	Methyl ethyl ketone (MEK, 2-Butanone)	10.0
79-00-5	1,1,2-Trichloroethane	10.0
79-01-6	Trichloroethylene	10.0
79-09-4	Propionic acid	60.0
79-10-7	2-Propenoic acid	60.0

CAS #	COPC	Feed Concentration (mg/L)
79-20-9	Methyl acetate	60.0
79-34-5	1,1,2,2-Tetrachloroethane	0.02
83-32-9	Acenaphthene	60.0
84-66-2	Diethyl phthalate	60.0
84-74-2	Dibutyl phthalate	60.0
85-01-8	Phenanthrene	60.0
85-68-7	Butylbenzyl phthalate	60.0
86-73-7	Fluorene	60.0
87-68-3	Hexachlorobutadiene	10.0
88-06-2	2,4,6-Trichlorophenol	60.0
88-72-2	2-Nitrotoluene	10.0
88-75-5	2-Nitrophenol	60.0
88-89-1	Picric acid	60.0
91-20-3	Naphthalene	2.0
91-22-5	Quinoline	60.0
91-58-7	2-Chloronapthalene	60.0
92-52-4	1,1`-Biphenyl	40.0
92-93-3	4-Nitrobiphenyl	60.0
95-13-6	Indene	60.0
95-47-6	o-Xylene	4.0
95-48-7	o-Cresol (2-Methylphenol)	10.0
95-49-8	2-Chlorotoluene	60.0
95-50-1	o-Dichlorobenzene (1,2-Dichlorobenzene)	4.0
95-57-8	2-Chlorophenol	60.0
95-95-4	2,4,5-Trichlorophenol	60.0
96-22-0	3-Pentanone	20.0
96-69-5	Bis(3-tert-butyl-4-hydroxy-6-methyl-phenyl)sulfide	60.0
98-51-1	p-tert-Butyltoluene	60.0
98-82-8	Cumene	60.0
98-83-9	alpha-Methylstyrene	10.0
98-86-2	Acetophenone	40.0
98-95-3	Nitrobenzene	40.0

*1336-36-3 LAW supernate feed concentration is 0.7 mg/l and for the HLW solids is 50 mg / kg total solids (24590-WTP-RPT-PO-03-008, Section 8.2.1)

- Constituents were separated into groups based on similar physical and chemical characteristics and expected behavior throughout the flowsheet. The constituents and their respected group numbers are presented below along with the phase that they are expected to be in the offgas. The constituents with an "X" under the Modeled column indicate the constituents that were included in the flowsheet. This data was obtained from the *Integrated Emissions Baseline Report for the Hanford Tank Waste Treatment and Immobilization Plant* (24590-WTP-RPT-PO-03-008), Table 2. Since the issuance of Rev 1 of 24590-WTP-RPT-PO-03-008, some feed organic constituents that were tracked in the SSFM have been deleted. These have been replaced by the following constituents: 101-84-8, 1321-64-8, 193-39-5, 206-44-0, 26140-60-3, 3697-24-3, 59-89-2, 621-64-7, 64-19-7, 83-32-9, 95-50-1 (24590-WTP-MRQ-PO-05-0049). These changes will be incorporated in Table 2 of

24590-WTP-RPT-PO-03-008 in the next revision. The table below also provides the F_v values for each organic constituent. F_v is a unitless parameter used to classify a constituent as being in one of three categories: vapor phase, particle phase, or particle-bound phase. This phase type affects the removal efficiency of the offgas control system for that compound. An F_v value of 1 indicates that the constituent exists only in the vapor phase. If the F_v value is less than 1, for example 0.9, this means that 90% of the compound exists in the vapor phase and 10% is particle-bound (i.e. [1-0.9]*100%). Therefore, removal efficiency for each portion of the constituent will differ based on the phase. Using the example above on HEPA filters, 90% of the constituent value on the gas stream will have a DF of 1 through the HEPA filters while 10% of its value will have a DF of 200,000. The F_v values were obtained from CCN 129507.

Organic Constituents Grouping

CAS#	Compound	F_v value	Group	Modeled	Phase
100-00-5	p-Nitrochlorobenzene	1	10		vapor
100-21-0	p-Phthalic acid	1	1	X	vapor
100-41-4	Ethyl benzene	1	20		vapor
100-42-5	Styrene	1	19		vapor
10061-01-5	cis-1,3-Dichloropropene	1	19	X	vapor
10061-02-6	trans-1,3-Dichloropropene	1	17		vapor
101-55-3	4-Bromophenylphenyl ether	1	14		vapor
101-84-8	Diphenyl ether	1	16	X	vapor
106-35-4	3-Heptanone	1	14		vapor
106-42-3	p-Xylene (Dimethyl benzene)	1	19		vapor
106-46-7	1,4-Dichlorobenzene	1	18		vapor
106-88-7	1,2-Epoxybutane	1	15		vapor
106-93-4	Ethylene dibromide (Dibromethane)	1	16	X	vapor
106-97-8	Butane	1	26	X	vapor
106-99-0	1,3-Butadiene	1	23	X	vapor
107-02-8	Acrolein	1	14		vapor
107-05-1	3-Chloropropene (Allyl chloride)	1	20		vapor
107-06-2	1,2-Dichloroethane (Ethylene chloride)	1	17		vapor
107-12-0	Propionitrile	1	13		vapor
107-13-1	Acrylonitrile	1	14		vapor
107-18-6	2-Propene-1-ol	1	10		vapor
107-31-3	Formic acid, methyl ester	1	15		vapor
107-66-4	Dibutylphosphate	0.995	5		particle-bound
107-87-9	2-Pentanone	1	14		vapor
108-03-2	1-Nitropropane	1	14		vapor
108-05-4	Vinyl acetate	1	16		vapor
108-10-1	Hexone (4-Methyl-2-pentanone or MIBK)	1	14		vapor
108-20-3	Bis(isopropyl)ether	1	18		vapor
108-38-3	m-Xylene (Dimethyl benzene)	1	19		vapor
108-39-4	m-Cresol	1	9		vapor
108-87-2	Methylcyclohexane	1	25	X	vapor
108-88-3	Toluene	1	19	X	vapor
108-90-7	Chlorobenzene	1	19		vapor
108-93-0	Cyclohexanol	1	10		vapor
108-94-1	Cyclohexanone	1	11		vapor

CALCULATION SHEET

PROJECT: WTP
JOB NO.: 24590
CALC NO.: 24590-WTP-M4C-FRP-00005
SHEET REV: C
SHEET NO.: 9

BY: E. Berrios
DATE: 01/09/06

SUBJECT: Estimation of Non-SSFM Represented Organic Emission Rates Required to Support the Integrated Emissions Baseline Report

CAS#	Compound	F_v value	Group	Modeled	Phase
108-95-2	Phenol	1	8	X	vapor
109-66-0	n-Pentane	1	26		vapor
109-99-9	Tetrahydrofuran	1	13		vapor
110-12-3	5-Methyl-2-hexanone	1	15		vapor
110-43-0	2-Heptanone	1	15		vapor
110-54-3	n-Hexane	1	27	X	vapor
110-62-3	n-Valeraldehyde	1	15		vapor
110-82-7	Cyclohexane	1	24	X	vapor
110-83-8	Cyclohexene	1	22		vapor
110-86-1	Pyridine	1	11		vapor
111-65-9	n-Octane	1	28		vapor
111-76-2	Ethylene glycol monobutyl ether	1	9		vapor
111-84-2	n-Nonane	1	28	X	vapor
117-81-7	Bis(2-ethylhexyl)phthalate (DEHP)	0.130	30		particle-bound
117-84-0	n-Dioctyl phthalate	0.852	32		particle-bound
120-12-7	Anthracene	0.998	13	X	particle-bound
120-82-1	1,2,4-Trichlorobenzene	1	17	X	vapor
120-83-2	2,4-Dichlorophenol	1	10		vapor
121-44-8	Triethylamine	1	15		vapor
121-69-7	Dimethylaniline	1	13		vapor
122-39-4	N,N-Diphenylamine	1	10	X	vapor
123-19-3	4-Heptanone	1	13		vapor
123-38-6	n-Propionaldehyde	1	14		vapor
123-51-3	3-Methyl-1-butanol	1	12		vapor
123-86-4	Acetic acid n-butyl ester	1	16		vapor
123-91-1	1,4-Dioxane	1	10		vapor
126-73-8	Tributyl phosphate	0.996	7	X	particle-bound
126-98-7	2-Methyl-2-propenenitrile (Methacrylonitrile)	1	16		vapor
127-18-4	Perchloroethylene (tetrachloroethylene)	1	21	X	vapor
127-19-5	N,N-Dimethylacetamide	1	5		vapor
128-37-0	2,6-Bis(tert-butyl)-4-methylphenol	1	32		vapor
129-00-0	Pyrene	0.994	33	X	particle-bound
1321-64-8	Pentachloronaphthalene	0.971	14	X	particle-bound
1321-65-9	Trichloronaphthalene	0.999	15		particle-bound
132-64-9	Dibenzofuran	0.999	15	X	particle-bound
1335-87-1	Hexachloronaphthalene	0.984	14		particle-bound
1335-88-2	Tetrachloronaphthalene	0.991	15		particle-bound
1336-36-3	Polychlorinated biphenyls (PCBs)	1	35	X	vapor
141-78-6	Acetic acid ethyl ester (Ethyl acetate)	1	14		vapor
141-79-7	4-Methyl-3-penten-2-one	1	13		vapor
142-82-5	n-Heptane	1	27		vapor
144-62-7	Oxalic acid	1	3	X	vapor
156-60-5	trans-1,2-Dichloroethylene	1	20		vapor
1634-04-4	Methyl tert-butyl ether	1	16		vapor
189-55-9	Dibenzo[a,i]pyrene	0	5		particle

CALCULATION SHEET

PROJECT: WTP
JOB NO.: 24590
CALC NO.: 24590-WTP-M4C-FRP-00005
SHEET REV: C
SHEET NO.: 10

BY: E. Berrios
DATE: 01/09/06

SUBJECT: Estimation of Non-SSFM Represented Organic Emission Rates Required to Support the Integrated Emissions Baseline Report

CAS#	Compound	F_v value	Group	Modeled	Phase
189-64-0	Dibenzo[a,h]pyrene	0	5		particle
191-24-2	Benzo(g,h,i)perylene	0.065	30		particle-bound
191-30-0	Benzo[a,i]pyrene	0	5		particle
192-65-4	Dibenzo[a,e]pyrene	0	5		particle
193-39-5	Indeno(1,2,3-cd)pyrene	0	30	X	particle
206-44-0	Fluoranthene	0.992	33	X	particle-bound
208-96-8	Acenaphthylene	1	14	X	vapor
2234-13-1	Octachloronaphthalene	0.629	14		particle-bound
224-42-0	Dibenz[a,j]acridine	0.241	4		particle-bound
226-36-8	Dibenz[a,h]acridine	0.285	4		particle-bound
25551-13-7	Trimethyl benzene	1	19		vapor
26140-60-3	Terphenyls	0.872	34	X	particle-bound
27154-33-2	Trichlorofluoroethane	1	23		vapor
287-92-3	Cyclopentane	1	24		vapor
3697-24-3	5-Methylchrysene	0.823	32	X	particle-bound
3825-26-1	Ammonium perfluorooctanoate	1	14		vapor
4170-30-3	2-Butenaldehyde (2-Butenal or Crotonaldehyde)	1	11	X	vapor
50-00-0	Formaldehyde	1	8		vapor
50-32-8	Benzo(a)pyrene	0.290	30	X	particle-bound
53-70-3	Dibenzo(a,h)anthracene	0	7		particle
540-59-0	1,2-Dichloroethylene	1	19		vapor
540-84-1	2,2,4-Trimethylpentane	1	28		vapor
541-73-1	1,3-Dichlorobenzene	1	19		vapor
56-23-5	Carbon tetrachloride	1	22	X	vapor
563-80-4	3-Methyl-2-butanone	1	14		vapor
56-49-5	3-Methylcholanthrene	0.364	28		particle-bound
57-14-7	1,1-Dimethylhydrazine	1	12	X	vapor
58-90-2	2,3,4,6-Tetrachlorophenol	1	11	X	vapor
591-78-6	2-Hexanone	1	14		vapor
59-50-7	4-Chloro-3-methylphenol	1	32		vapor
59-89-2	N-Nitrosomorpholine	1	6	X	vapor
602-87-9	5-Nitroacenaphthene	0.997	9		particle-bound
60-29-7	Ethyl ether	1	17		vapor
603-34-9	Triphenylamine	1	32	X	vapor
60-34-4	Methylhydrazine	1	10		vapor
60-35-5	Acetamide	1	5	X	vapor
621-64-7	Di-n-Propylnitrosamine (N-Nitroso-di-n-propylamine)	1	10	X	vapor
624-83-9	Methyl isocyanate	1	17		vapor
627-13-4	Nitric acid, propyl ester	1	17		vapor
62-75-9	N-Nitroso-N,N-dimethylamine (Dimethylnitrosamine)	1	9	X	vapor
630-20-6	1,1,1,2-Tetrachloroethane	1	18		vapor
64-17-5	Ethyl alcohol	1	10		vapor
64-18-6	Formic acid	1	7		vapor
64-19-7	Acetic acid	1	6	X	vapor

CALCULATION SHEET

PROJECT: WTP
JOB NO.: 24590
CALC NO.: 24590-WTP-M4C-FRP-00005
SHEET REV: C
SHEET NO.: 11

BY: E. Berrios
DATE: 01/09/06

SUBJECT: Estimation of Non-SSFM Represented Organic Emission Rates Required to Support the Integrated Emissions Baseline Report

CAS#	Compound	F_v value	Group	Modeled	Phase
67-56-1	Methyl alcohol (Methanol)	1	10		vapor
67-63-0	2-Propyl alcohol (Isopropanol; Propan-2-01)	1	11		vapor
67-64-1	2-Propanone (Acetone)	1	13		vapor
67-66-3	Chloroform	1	19		vapor
67-72-1	Hexachloroethane	1	19		vapor
684-16-2	Hexafluoroacetone	1	19		vapor
71-23-8	n-Propyl alcohol	1	11		vapor
71-36-3	n-Butyl alcohol	1	11		vapor
71-43-2	Benzene	1	19	X	vapor
71-55-6	Methyl chloroform (1,1,1-Trichloroethane)	1	21		vapor
74-83-9	Bromomethane (Methyl bromide)	1	19		vapor
74-87-3	Chloromethane (Methyl chloride)	1	20		vapor
74-97-5	Bromochloromethane	1	17		vapor
74-99-7	Methylacetylene	1	20		vapor
75-00-3	Chloroethane	1	20		vapor
75-01-4	Vinyl chloride (1-Chloroethene)	1	22		vapor
75-05-8	Acetonitrile	1	13	X	vapor
75-07-0	Acetaldehyde	1	13		vapor
75-09-2	Dichloromethane (Methylene chloride)	1	19		vapor
75-12-7	Formamide	1	4	X	vapor
75-15-0	Carbon disulfide	1	20		vapor
75-21-8	Ethylene oxide (Oxirane)	1	15		vapor
75-27-4	Bromodichloromethane	1	18		vapor
75-34-3	1,1-Dichloroethane	1	19		vapor
75-35-4	1,1-Dichloroethene (Vinylidene chloride)	1	22		vapor
75-43-4	Dichlorofluoromethane	1	20		vapor
75-45-6	Chlorodifluoromethane	1	22		vapor
75-50-3	Trimethylamine	1	14		vapor
75-52-5	Nitromethane	1	13		vapor
75-55-8	2-Methylaziridine	1	11		vapor
75-61-6	Difluorodibromomethane	1	22		vapor
75-63-8	Trifluorobromomethane	1	25		vapor
75-65-0	2-Methyl-2-propanol	1	11		vapor
75-69-4	Trichlorofluoromethane	1	23		vapor
75-71-8	Dichlorodifluoromethane	1	25		vapor
76-03-9	Trichloroacetic acid	1	5		vapor
76-11-9	1,1,1,2-Tetrachloro-2,2-difluoroethane	1	24		vapor
76-12-0	1,1,2,2-Tetrachloro-1,2-difluoroethane	1	23		vapor
76-13-1	1,2,2-Trichloro-1,1,2-trifluoroethane (Freon 113)	1	25		vapor
76-14-2	1,2-Dichloro-1,1,2,2-tetrafluoroethane	1	28		vapor
76-15-3	Chloropentafluoroethane	1	29	X	vapor
78-83-1	2-Methylpropyl alcohol (Isobutyl alcohol)	1	11		vapor
78-87-5	1,2-Dichloropropane	1	19		vapor
78-92-2	1-Methylpropyl alcohol (2-Butanol)	1	11		vapor
78-93-3	Methyl ethyl ketone (MEK, 2-Butanone)	1	13		vapor

CALCULATION SHEET

PROJECT: WTP
JOB NO.: 24590
CALC NO.: 24590-WTP-M4C-FRP-00005
SHEET REV: C
SHEET NO.: 12

BY: E. Berrios
DATE: 01/09/06

SUBJECT: Estimation of Non-SSFM Represented Organic Emission Rates Required to Support the Integrated Emissions Baseline Report

CAS#	Compound	F_v value	Group	Modeled	Phase
79-00-5	1,1,2-Trichloroethane	1	17		vapor
79-01-6	Trichloroethylene	1	20	X	vapor
79-09-4	Propionic acid	1	8		vapor
79-10-7	2-Propenoic acid	1	8		vapor
79-20-9	Methyl acetate	1	14		vapor
79-34-5	1,1,2,2-Tetrachloroethane	1	16		vapor
83-32-9	Acenaphthene	1	15	X	vapor
84-66-2	Diethyl phthalate	1	8	X	vapor
84-74-2	Dibutyl phthalate	0.994	31	X	particle-bound
85-01-8	Phenanthrene	0.999	13		particle-bound
85-68-7	Butylbenzyl phthalate	0.948	31		particle-bound
86-73-7	Fluorene	1	14		vapor
87-68-3	Hexachlorobutadiene	1	20	X	vapor
88-06-2	2,4,6-Trichlorophenol	1	10		vapor
88-72-2	2-Nitrotoluene	1	12		vapor
88-75-5	2-Nitrophenol	1	12		vapor
88-89-1	Picric acid	0.939	2	X	particle-bound
91-20-3	Naphthalene	1	16	X	vapor
91-22-5	Quinoline	1	9		vapor
91-58-7	2-Chloronapthalene	1	16		vapor
92-52-4	1,1`-Biphenyl	1	16		vapor
92-93-3	4-Nitrobiphenyl	0.999	10		particle-bound
95-13-6	Indene	1	18		vapor
95-47-6	o-Xylene	1	19		vapor
95-48-7	o-Cresol (2-Methylphenol)	1	9		vapor
95-49-8	2-Chlorotoluene	1	19		vapor
95-50-1	o-Dichlorobenzene (1,2-Dichlorobenzene)	1	18	X	vapor
95-57-8	2-Chlorophenol	1	11		vapor
95-95-4	2,4,5-Trichlorophenol	1	9		vapor
96-22-0	3-Pentanone	1	14		vapor
96-69-5	Bis(3-tert-butyl-4-hydroxy-6-methyl-phenyl)sulfide	1	19		vapor
98-51-1	p-tert-Butyltoluene	1	21		vapor
98-82-8	Cumene	1	20		vapor
98-83-9	alpha-Methylstyrene	1	19		vapor
98-86-2	Acetophenone	1	11	X	vapor
98-95-3	Nitrobenzene	1	12		vapor

- Each organic constituent has a specific removal efficiency (i.e. decontamination factor - DF) that has been specified by engineering calculations and Research and Technology testing results. The DFs assigned per facility are as follows:
  - Pretreatment
    - PVP Caustic scrubber (24590-PTF-MKD-PVP-00002)
      - Vapor: 1
      - Particle: 3.5
    - PVP HEME (24590-WTP-RPT-PO-03-008, Table 11)
      - Vapor: 1

    - Particle: 200
  - PVV/PJV HEPA Filters (24590-WTP-RPT-ENV-01-004, section 4.2.2.1)
    - Vapor: 1
    - Particle: 200,000
  - PVP Thermal Oxidizer (24590-WTP-RPT-PO-03-008, Appendix G)
    - DFs dependent on organic constituent. Values are shown in the table at the end of this section.
  - PVP Carbon Beds (24590-WTP-RPT-PO-03-008, Appendix G)
    - DFs dependent on organic constituent. Values are shown in the table at the end of this section.
  - PJV Demister (24590-WTP-RPT-PO-03-008, Table 11)
    - Vapor: 1
    - Particle: 5

- LAW and HLW Vitrification (CCN 053500)
  - Melters
    - Vapor: 1.1
    - Particle: 1.1
  - SBS
    - Vapor: 1
    - Particle: 20
  - WESP
    - Vapor: 1
    - Particle: 20
  - HLW HEME
    - Vapor: 1
    - Particle: 90
  - LVP/HOP/PJV HEPA filters
    - Vapor: 1
    - Particle: 200,000
  - LVP/HOP Sulfur Activated Carbon
    - Vapor: 1
    - Particle: 1
  - HOP Silver Mordenite
    - Vapor: 1
    - Particle: 1
  - LVP/HOP Thermal Catalytic Oxidizer
    - Vapor: 20
    - Particle: 20
  - LVP/HOP Selective Catalytic Reducer
    - Vapor: 1
    - Particle: 1
  - LVP Caustic Scrubber
    - Vapor: 1
    - Particle: 1

CALCULATION SHEET

PROJECT: WTP
JOB NO.: 24590
CALC NO.: 24590-WTP-M4C-FRP-00005
SHEET REV: C
SHEET NO.: 14

BY: E. Berrios
DATE: 01/09/06

SUBJECT: Estimation of Non-SSFM Represented Organic Emission Rates Required to Support the Integrated Emissions Baseline Report

Pretreatment Facility Organic Constituents Thermal Oxidizer and Carbon Bed Adsorber DFs		
CAS Registry Number	**PT Thermal Oxidizer DF**	**PT Carbon Bed Adsorber DF**
100-00-5	10,000	5
100-21-0	20	50
100-41-4	10,000	1
100-42-5	10,000	1
10061-01-5	100	1
10061-02-6	50	1
101-55-3	3.333333	50
101-84-8	50	5
106-35-4	10,000	1
106-42-3	1,000	1
106-46-7	50	2
106-88-7	10,000	1
106-93-4	1	10
106-97-8	10,000	1
106-99-0	10,000	1
107-02-8	10,000	1
107-05-1	10,000	1
107-06-2	10,000	1
107-12-0	10,000	1
107-13-1	10,000	1
107-18-6	10,000	1
107-31-3	10,000	1
107-66-4	10,000	1
107-87-9	10,000	1
108-03-2	10,000	1
108-05-4	10,000	1
108-10-1	10,000	1
108-20-3	10,000	1
108-38-3	1,000	1
108-39-4	1,000	2
108-87-2	10,000	1
108-88-3	10,000	1
108-90-7	20	5
108-93-0	10,000	2
108-94-1	10,000	2
108-95-2	10	20
109-66-0	10,000	1
109-99-9	10,000	1
110-12-3	10,000	1

Pretreatment Facility Organic Constituents Thermal Oxidizer and Carbon Bed Adsorber DFs		
CAS Registry Number	**PT Thermal Oxidizer DF**	**PT Carbon Bed Adsorber DF**
110-43-0	10,000	1
110-54-3	10,000	1
110-62-3	10,000	1
110-82-7	10,000	1
110-83-8	10,000	1
110-86-1	10,000	1
111-65-9	10,000	1
111-76-2	10,000	2
111-84-2	10,000	2
117-81-7	10,000	5
117-84-0	10,000	5
120-12-7	1,000	5
120-82-1	100	5
120-83-2	3.333333	50
121-44-8	10,000	1
121-69-7	10,000	2
122-39-4	50	5
123-19-3	10,000	1
123-38-6	10,000	1
123-51-3	10,000	1
123-86-4	10,000	1
123-91-1	10,000	1
126-73-8	10,000	5
126-98-7	10,000	1
127-18-4	1	10
127-19-5	10,000	1
128-37-0	10,000	5
129-00-0	3.333333	50
1321-64-8	3.333333	50
1321-65-9	3.333333	50
132-64-9	3.333333	50
1335-87-1	3.333333	50
1335-88-2	3.333333	50
1336-36-3	3.333333	50
141-78-6	10,000	1
141-79-7	10,000	1
142-82-5	10,000	1
144-62-7	10	20
156-60-5	10,000	1

CALCULATION SHEET

PROJECT: WTP
JOB NO.: 24590
CALC NO.: 24590-WTP-M4C-FRP-00005
SHEET REV: C
SHEET NO.: 16

BY: E. Berrios
DATE: 01/09/06

SUBJECT: Estimation of Non-SSFM Represented Organic Emission Rates Required to Support the Integrated Emissions Baseline Report

Pretreatment Facility Organic Constituents Thermal Oxidizer and Carbon Bed Adsorber DFs		
CAS Registry Number	**PT Thermal Oxidizer DF**	**PT Carbon Bed Adsorber DF**
1634-04-4	10,000	1
189-55-9	3.333333	50
189-64-0	3.333333	50
191-24-2	3.333333	50
191-30-0	3.333333	50
192-65-4	3.333333	50
193-39-5	3.333333	50
206-44-0	3.333333	50
208-96-8	3.333333	50
2234-13-1	3.333333	50
224-42-0	3.333333	50
226-36-8	3.333333	50
25551-13-7	1,000	2
26140-60-3	3.333333	50
27154-33-2	1	10
287-92-3	10,000	1
3697-24-3	3.333333	50
3825-26-1	3.333333	50
4170-30-3	10,000	1
50-00-0	10,000	1
50-32-8	3.333333	50
53-70-3	3.333333	50
540-59-0	10,000	1
540-84-1	10,000	1
541-73-1	50	2
56-23-5	1	5
563-80-4	10,000	1
56-49-5	3.333333	50
57-14-7	10,000	1
58-90-2	3.333333	10
591-78-6	1,000	1
59-50-7	3.333333	20
59-89-2	10,000	2
602-87-9	3.333333	50
60-29-7	10,000	1
603-34-9	3.333333	50
60-34-4	10,000	1
60-35-5	10,000	2
621-64-7	10,000	2

CALCULATION SHEET

PROJECT: WTP
JOB NO.: 24590
CALC NO.: 24590-WTP-M4C-FRP-00005
SHEET REV: C
SHEET NO.: 17

BY: E. Berrios
DATE: 01/09/06

SUBJECT: Estimation of Non-SSFM Represented Organic Emission Rates Required to Support the Integrated Emissions Baseline Report

Pretreatment Facility Organic Constituents Thermal Oxidizer and Carbon Bed Adsorber DFs		
CAS Registry Number	**PT Thermal Oxidizer DF**	**PT Carbon Bed Adsorber DF**
624-83-9	1,000	1
627-13-4	10,000	1
62-75-9	10,000	2
630-20-6	1	10
64-17-5	10,000	1
64-18-6	10,000	1
64-19-7	10,000	1
67-56-1	10,000	1
67-63-0	10,000	1
67-64-1	10,000	1
67-66-3	1	2
67-72-1	1	50
684-16-2	1	1
71-23-8	10,000	1
71-36-3	10,000	1
71-43-2	100	1
71-55-6	1,000	1
74-83-9	1,000	1
74-87-3	20	1
74-97-5	1	2
74-99-7	10,000	1
75-00-3	1,000	1
75-01-4	10,000	1
75-05-8	1,000	1
75-07-0	10,000	1
75-09-2	50	1
75-12-7	10,000	1
75-15-0	10,000	1
75-21-8	10,000	1
75-27-4	1	5
75-34-3	10,000	1
75-35-4	10,000	1
75-43-4	1,000	1
75-45-6	50	1
75-50-3	10,000	1
75-52-5	10,000	1
75-55-8	10,000	1
75-61-6	1	1
75-63-8	1	1

CALCULATION SHEET

PROJECT: WTP
JOB NO.: 24590
CALC NO.: 24590-WTP-M4C-FRP-00005
SHEET REV: C
SHEET NO.: 18

BY: E. Berrios
DATE: 01/09/06

SUBJECT: Estimation of Non-SSFM Represented Organic Emission Rates Required to Support the Integrated Emissions Baseline Report

Pretreatment Facility Organic Constituents Thermal Oxidizer and Carbon Bed Adsorber DFs		
CAS Registry Number	**PT Thermal Oxidizer DF**	**PT Carbon Bed Adsorber DF**
75-65-0	10,000	1
75-69-4	1	1
75-71-8	1	1
76-03-9	1	50
76-11-9	20	5
76-12-0	20	5
76-13-1	20	2
76-14-2	1	1
76-15-3	1	1
78-83-1	10,000	1
78-87-5	1,000	1
78-92-2	10,000	1
78-93-3	1,000	1
79-00-5	10,000	1
79-01-6	10,000	1
79-09-4	10,000	1
79-10-7	10,000	1
79-20-9	10,000	1
79-34-5	1	10
83-32-9	3.333333	50
84-66-2	10,000	5
84-74-2	10,000	5
85-01-8	3.333333	50
85-68-7	10,000	5
86-73-7	3.333333	50
87-68-3	50	5
88-06-2	3.333333	50
88-72-2	10,000	2
88-75-5	3.333333	20
88-89-1	10,000	5
91-20-3	100	2
91-22-5	10,000	2
91-58-7	3.333333	50
92-52-4	1,000	5
92-93-3	3.333333	50
95-13-6	1,000	2
95-47-6	10,000	1
95-48-7	1,000	2
95-49-8	10,000	2

Pretreatment Facility Organic Constituents Thermal Oxidizer and Carbon Bed Adsorber DFs		
CAS Registry Number	**PT Thermal Oxidizer DF**	**PT Carbon Bed Adsorber DF**
95-50-1	50	2
95-57-8	10,000	2
95-95-4	3.333333	50
96-22-0	10,000	1
96-69-5	3.333333	50
98-51-1	10,000	2
98-82-8	10,000	2
98-83-9	100	2
98-86-2	100	2
98-95-3	10,000	2

- The results from the SSFM used to estimate the organic releases in this calculation were based on the model run request titled *2005 Air Emissions Profile* (24590-WTP-MRQ-PO-05-0049). The stream reports used in this calculation are:
  - FRP01 - LAW Feed
  - FRP14 – HLW Feed
  - HOP10 – Unabated HLW Vessel Ventilation Header
  - HMP06 – Unabated HLW Melter Offgas
  - LFP06+RLD32+RLD33+RLD34 – Unabated LAW Vessel Ventilation Header (known as LVP01)
  - LMP06 – Unabated LAW Melter Offgas
  - PJV04 – Unabated Pretreatment RFD/PJM
  - PJV32 – Unabated HLW RFD/PJM
  - PVP01 – Unabated Pretreatment Vessel Vent

  These stream reports can be found in Attachment A of this calculation.

3 Background

There are a total of 219 organic constituents (excluding Products of Incomplete Combustion) that are required to be tracked through the WTP for permitting purposes. Emissions profiles for the WTP are generated by using the SSFM. In order to simplify the flowsheet, not all organic constituents are tracked in the SSFM. The constituents were segregated into groups based on similar physical and chemical properties. Representatives from each group were selected and are tracked in the SSFM. Only 51 organic constituents are tracked in the SSFM. Based on the behavior and results of these representative constituents, the expected emissions rates for the non-tracked constituents can be calculated. This calculation estimates these rates.

4 Applicable Codes and Standards

NA

5 Methodology

The following methodology was used in this calculation:

- Organic feed rates to the WTP were calculated by multiplying the constituent's feed concentration in mg/l by the volumetric flowrate of the feed stream in liters per minute. This mass flowrate was then converted to grams per second.
- The results from the representative compounds were obtained from the SSFM for each desired stream (PVP01 is used as an example). The performance factor (PF) for the representative compounds was calculated per stream relative to the feed stream, FRP01 and FRP14. This was done by obtaining the representative compounds mass feed rate from stream reports # FRP01 and FRP14 and its mass flowrate at the stream being evaluated. The PF was calculated by dividing the constituent's mass feed rate by the specified stream's constituent mass flowrate.

  $$PF = \frac{\text{mass rate at waste feed [representative compound]}}{\text{mass rate at point of interest [representative compound]}}$$

- Once the PF was calculated, it was multiplied by the feed rate for the non-represented compound in order to obtain the mass flowrate of the constituent at that stream. If more than one compound was used to represent a group, the average PF between the compounds was used to calculate the non-represented compound rate.
- The combined rate of the 14 coplanar PCBs is established as 1% of the total PCB (as represented by CAS# 1336-36-3). Thus, to calculate the feed rate for each coplanar PCB, the feed rate of the total PCB was multiplied by 0.01 and divided by 14.
- For the constituents in the Pretreatment Vessel Vent the stack calculation is easily determined by applying the DFs per unit operation. Thus, the feed rate entering the Pretreatment Vessel Vent is divided by all the applicable DFs for each constituent. The final number obtained is the stack emissions estimate. This same process also applies to the Pretreatment PJM/RFD system and the HLW PJM/RFD system. For example, if a constituent had a value of 1.0E-03 g/sec at the entrance to the pretreatment caustic scrubber (stream PVP01) and DFs of 1 for the caustic scrubber, 1 for the HEME, 1 for the HEPA filters, 1000 for the TCO and 5 for the carbon beds, then the stack flowrate would be:
  1.0E-03 / (1*1*1*1000*5) = 2.0E-07 g/sec.
- For particle-bound constituents with F_v values within the following range $1 > F_v \geq 0.05$, the vapor and particle fraction for the constituent were calculated and then the applicable DFs were applied. For example, if a constituent had a mass rate in stream PVP01 of 10 g/sec with an F_v value of 0.9, this means that:
  10 g/sec * 0.9 = 9 g/sec of the constituent is in the vapor phase and,
  10 g/sec - 9 g/sec = 1 g/sec of the constituent is in the particle-bound phase
  Assuming that the thermal oxidizer DF is 10,000 and the carbon bed DF is 5, then the stack emission rate for this constituent is:
  Vapor portion:
  9 g/sec / (DF NaOH Scrubber * DF HEME * DF HEPA * DF TO * DF CB) = stack emission rate in g/sec
  9 g/sec / (1 * 1 * 1 * 10,000 * 5) = 1.80E-04 g/sec
  Particle portion:
  1 g/sec / (DF NaOH Scrubber * DF HEME * DF HEPA * DF TO * DF CB) = stack emission rate in g/sec
  1 g/sec / (3.5 * 200 * 200,000 * 10,000 * 5) = 1.43E-13 g/sec
  Therefore the total stack emission rate for this constituent is:
  Total = vapor portion + particle portion
  Total = 1.80E-04 g/sec + 1.43E-13 g/sec = 1.80E-04 g/sec
- For constituents with F_v values less than 0.05, the constituent is considered entirely in the particle phase and the applicable DFs were applied.
- In the HLW and LAW vitrification facilities, there is generation of offgas in the melter, which is eventually mixed with the vessel vents in the primary offgas system. Thus for the vitrification plants, the estimation of

organic constituents generation from the melter and vessel vents is calculated as was done in the Pretreatment vessel vent and PJM/RFD areas. When the offgas meets the vessel vent stream, these two streams were added together to obtain the overall constituent mass flowrate at that point. From then on, the specific DFs were used for all unit operations found from the mixing point up to the stack. The effect of the Fv values was taken into account as described above.

- After the values were calculated for each stream, they were analyzed to determine if they were less than 1E-15. If yes, then the value was set to zero, otherwise, the value remain the same.

6 Assumptions

NA

7 Calculations

Calculations were performed using the Microsoft Excel® 2000 spreadsheet on a Compaq PC workstation. The calculation for two groupings of organic constituents having similar chemical and physical properties is shown for all the streams. Of the groups selected, one group has one representative compound while the other group has two representative compounds. The groups selected are:
Group 4: represented by Formamide (75-12-7)
Group 8: represented by Phenol (108-95-2) and Diethyl Phthalate (84-66-2)
The entire lists of constituents for these two groups are as follows:
Group 4
- Formamide (75-12-7)
- Dibenz[a,j]acridine (224-42-0)
- Dibenz[a,h]acridine (226-36-8)

Group 8
- - Phenol (108-95-2)
- - Diethyl Phthalate (84-66-2)
- Formaldehyde (50-00-0)
- Propionic Acid (79-09-4)
- 2-Propenoic Acid (79-10-7)

Also the calculation for Coplanar PCBs is included for all the streams. The coplanar PCBs are represented by:
2,3',4,4',5-Pentachlorobiphenyl (PBC 118) (31508-00-6)
3,3',4,4'-Tetrachlorobiphenyl (TCB) (32598-13-3)
2,3,3',4,4'-Pentachlorobiphenyl (PCB 105) (32598-14-4)
3,3',4,4',5,5'-Hexachlorobiphenyl (32774-16-6)
2,2',3,4,4',5,5'-Heptachlorobiphenyl (35065-29-3)
2,2',3,3',4,4',5-Heptachlorobiphenyl (35065-30-6)
2,3,3',4,4',5-Hexachlorobiphenyl (PCB 157) (38380-08-4)
2,3,3',4,4',5,5'-Heptachlorobiphenyl (39635-31-9)
2,3',4,4',5,5'-Hexachlorobiphenyl (52663-72-6)
3,3',4,4',5-Pentachlorobiphenyl (57465-28-8)
2',3,4,4',5-Pentachlorobiphenyl (65510-44-3)
2,3,3',4,4',5'-Hexachlorobiphenyl (69782-90-7)
3,4,4',5-Tetrachlorobiphenyl (70362-50-4)
2,3,4,4',5-Pentachlorobiphenyl (74472-37-0)

7.1 Feed Rate

FRP14 is the HLW waste feed stream while FRP01 is the LAW waste feed. The total feed rate per constituent is calculated by adding the feed rate values in each stream.

For all the calculations in this section refer to Table B-1 in Attachment B. From Attachment A, streams FRP01 and FRP14, the total WTP feed volumetric flowrate for this stream is: 1.51 ft^3/min (cell D1)
Converting to liters per minute: 1.51 ft^3/min * 28.317 l/ft^3 = 42.9 l/min (cell D2)

Group 4 feed rates in grams per second:
Formamide (75-12-7) feed concentration: 60 mg/l (cell C149)
60 mg/l (cell C149) * 42.9 l/min * 1 g / 1000 mg * 1 min / 60 sec = 4.29E-02 g/sec (cell H149)
The other 2 constituents in this group have the same feed concentration thus the feed rate is the same.

Group 8 feed rates in grams per second:
Phenol (108-95-2) feed concentration: 60 mg/l (cell C41)
60 mg/l (cell C41) * 42.9 l/min * 1 g / 1000 mg * 1 min / 60 sec = 4.29E-02 g/sec (cell H41)
Constituents Diethyl Phthalate (84-66-2), Propionic Acid (79-09-4), and 2-Propenoic Acid (79-10-7) have the same feed concentration thus the feed rate is the same. Formaldehyde's (50-00-0) feed concentration is different.
Formaldehyde feed concentration (50-00-0): 10 mg/l (cell C103)
10 mg/l (cell C103) * 42.9 l/min * 1 g / 1000 mg * 1 min / 60 sec = 7.14E-03 g/sec (cell H103)

Coplanar PCBs feed rate:
The coplanar PCB feed rate is obtained by summing the SSFM results for streams FRP01 and FRP14. The feed rate for the PCBs depends on the amount of supernate in the feed and the amount of solids in the feed. For the supernate, the PCBs are based on a concentration of 0.7 mg/l. For the solids, the PCBs are based on a concentration of 50 mg PCBs / kg of total solids. Per Tables A-2 and A-3, the PCBs total feed rate is 1.74E-03 g/sec.
Based on this, the feed rate for the 14 coplanar PCBs is:
1.74E-03 (cell H78) * 0.01/14 = 1.24E-06 g/sec (cells L8 through L21)

7.2 Pretreatment Vessel Vent Analysis

To determine the stack releases from the Pretreatment Vessel Vent System (PVV), first the mass rates of all the constituents are calculated in stream PVP01 (the unabated Pretreatment Vessel Vent stream). Then the corresponding DFs for each constituent within the system are applied to these values to obtain the final stack releases (stream PVP12). For particle-bound constituents with F_v values within the range $1 > F_v \geq 0.05$, both the vapor and particle DF were applied to the corresponding vapor and particle mass rate to arrive at the desired emission rate.

7.2.1 PVP01 Stream

This streams depicts the unabated Pretreatment Vessel Ventilation. For all the calculations in this section refer to Table B-2. First the feed rate is obtained followed by the mass rate of the representative constituent at the stream specified. The performance factor for this constituent is calculated and applied to the non-represented compounds to obtain their mass rate.

Group 4
Formamide (75-12-7) feed rate: 4.29E-02 g/sec (cell C147)

Formamide (75-12-7) rate at PVP01 from the PVP01 stream report in Attachment A: 6.34E-06 g/sec (cell H147 of Table B-2)
Performance factor for Formamide: 6.34E-06/4.29E-02 = 1.48E-04 (cell I147, also copied to cell O8)

Dibenz[a,j]acridine (224-42-0) feed rate: 4.29E-02 g/sec (cell C92)
Mass rate at PVP01: 4.29E-02 (cell C92) * 1.48E-04 (cell O8) = 6.34E-06 g/sec (cell K92)
Dibenz[a,h]acridine (226-36-8) feed rate: 4.29E-02 g/sec (cell C93)
Mass rate at PVP01: 4.29E-02 (cell C93) * 1.48E-04 (cell O8) = 6.34E-06 g/sec (cell K93)

Group 8
Phenol (108-95-2) feed rate: 4.29E-02 g/sec (cell C39)
Phenol (108-95-2) rate at PVP01 from the PVP01 stream report in Attachment A: 1.31E-03 g/sec (cell H39)
Performance factor for Phenol: 1.31E-03/4.29E-02 = 3.06E-02 (cell I39)

Diethyl Phthalate (84-66-2) feed rate: 4.29E-02 g/sec (cell C180)
Diethyl Phthalate (84-66-2) rate at PVP01 from the PVP01 stream report in Attachment A: 2.05E-03 g/sec (cell H180)
Performance factor for Diethyl Phthalate: 2.05E-03/4.29E-02 = 4.79E-02 (cell I180)

Since this group is represented by the above 2 constituents, an average performance factor is then calculated and applied to the other constituents. Average performance factor is:
(3.06E-02 (cell I39) + 4.79E-02 (cell I180))/2 = 3.92E-02 (cell O12)

Formaldehyde (50-00-0) feed rate: 7.14E-03 g/sec (cell C101)
Mass rate at PVP01: 7.14E-03 (cell C101) * 3.92E-02 (cell O12) = 2.80E-04 g/sec (cell K101)

Propionic Acid (79-09-4) feed rate: 4.29E-02 g/sec (cell C175)
Mass rate at PVP01: 4.29E-02 (cell C175) * 3.92E-02 (cell O12) = 1.68E-03 g/sec (cell K175)

2-Propenoic Acid (79-10-7) feed rate: 5.72E-02 g/sec (cell C176)
Mass rate at PVP01: 5.72E-02 (cell C176) * 3.92E-02 (cell O12) = 2.24E-03 g/sec (cell K176)

Column L adjusts the values to zero if they are below 1E-15, otherwise they remain the same.

Coplanar PCBs
1336-36-3 feed rate at PVP01 from the PVP01 stream report in Attachment A: 4.31E-03 g/sec (cell H76)
Mass rate for the 14 coplanar PCBs in PVP01 is:
4.31E-03 (cell H76) * 0.01/14 = 3.08E-06 g/sec (cells T7 through T20)
Thus the corrected mass rate for 1336-36-3 in PVP01 is:
4.31E-03 g/sec * 0.99 = 4.26E-03 g/sec (cell K76)

7.2.2 PVP12 Stream

For all the calculations for this stream refer to Table B-3 of Attachment B. Input to this spreadsheet are the results from PVP01 stream calculations. These numbers are imported to Column C from cells L4 through L208 of Table B-2. Also all the DFs and F_v values are imported from Section 2 of this calculation. The corresponding DFs for this stream are related to the following unit operations: caustic scrubber, HEME, HEPA filters, TO, and carbon beds. The calculations for Group 4 and Coplanar PCBs are the only ones shown below. The remaining groups are calculated in the same manner.

Group 4

Formamide (75-12-7) mass rate at PVP01: 6.34E-06 g/sec (cell C147)

To calculate the emission rate, first, the F_v value for the constituent is analyzed and the split between vapor and particle is determined. The F_v value is imported to column E from Section 2. The F_v value given pertains to the vapor phase. If this value is less than 0.05, the constituent is assumed to be 100% particle. Column F makes this adjustment to the Fv. Since the F_v value for formamide is 1 (cell E147) no adjustment is required and the value in cell F147 is 1. The particle fraction is calculated by using the following formula: $1 - F_v$. This calculation is done in column G. Since the F_v value is 1 for formamide, the particle fraction is 1 - 1 = 0 (cell G147). Columns L and M provide the TO and carbon bed DF for formamide:

TO DF = 10,000 (cell L147)

Carbon bed DF = 1 (cell M147)

Cells W21 through AB26 show the applicable DFs for the PVP/PVV system for vapor and particle constituents. The overall DF is calculated in column AB.

The emission rates are then calculated for both the vapor and particle fractions. The vapor mass rate is calculated by multiplying the stream mass rate (cell C147) by the F_v vapor value (cell F147). This value is then divided by the overall vapor DF calculated in cell AB25 and by the TO DF (cell L147) and the carbon bed DF (cell M147).

Vapor fraction = 6.34E-06 g/sec (cell C147) * 1 (cell F147) / 1 (cell AB25) / 10,000 (cell L147) / 1 (cell M147)

Vapor fraction = 6.34E-10 g/sec (cell N147)

The particle mass rate is calculated identically as the vapor fraction except for the overall DF used which is the particle DF shown in cell AB26. The particle emission rate is shown on cell O147.

Particle fraction = 6.34E-06 g/sec (cell C147) * 0 (cell G147) / 1.32E+08 (cell AB26) / 10,000 (cell L147) / 1 (cell M147)

Particle fraction = 0 g/sec (cell O147)

The overall emission rate is then the summation of the vapor and particle fraction:

Total emission rate = vapor fraction + particle fraction

Total emission rate = 6.34E-10 g/sec (cell N147) + 0 g/sec (cell O147) = 6.34E-10 g/sec (cell P147)

Dibenz[a,j]acridine (224-42-0) mass rate at PVP01: 6.34E-06 g/sec (cell C92)

The same process as described above was followed:

F_v vapor: 0.241 (cell E92)

Since F_v is $\geq$0.05, the value remains the same in cell F92. The particle fraction is therefore:

Particle fraction: 1 - 0.241 = 0.759 (cell G92)

The vapor fraction mass rate is:

Vapor fraction = 6.34E-06 g/sec (cell C92) * 0.241 (cell F92) / 1 (cell AB25) / 3.333333 (cell L92) / 50 (cell M92)

Vapor fraction = 9.17E-09 g/sec (cell N92)

The particle fraction mass rate is:

Particle fraction = 6.34E-06 g/sec (cell C92) * 0.759 (cell G92) / 1.32E+08 (cell AB26) / 3.333333 (cell L92) / 50 (cell M92)

Particle fraction = 2.19E-16 g/sec (cell O92)

The total emission rate is:

Total emission rate: 9.17E-09 g/sec (cell N92) + 2.19E-16 g/sec (cell O92) = 9.17E-09 g/sec (cell P92)

Dibenz[a,h]acridine (226-36-8) mass rate at PVP01: 6.34E-06 g/sec (cell C93)

F_v vapor: 0.285 (cell E93)

Since F_v is $\geq$0.05, the value remains the same in cell F93. The particle fraction is therefore:

Particle fraction: 1 - 0.285 = 0.715 (cell G93)
The vapor fraction mass rate is:
Vapor fraction = 6.34E-06 g/sec (cell C93) * 0.285 (cell F93) / 1 (cell AB25) / 3.333333 (cell L93) / 50 (cell M93)
Vapor fraction = 1.08E-08 g/sec (cell N93)
The particle fraction mass rate is:
Particle fraction = 6.34E-06 g/sec (cell C93) * 0.715 (cell G93) / 1.32E+08 (cell AB26) / 3.333333 (cell L93) / 50 (cell M93)
Particle fraction = 2.06E-16 g/sec (cell O93)
The total emission rate is:
Total emission rate: 1.08E-08 g/sec (cell N93) + 2.06E-16 g/sec (cell O93) = 1.08E-08 g/sec (cell P93)

Column Q adjusts the values to zero if they are less than 1E-15, otherwise the value remains the same.

Coplanar PCBs
1336-36-3 corrected mass rate at PVP01: 4.26E-03 (cell C76)
F_v vapor: 1 (cell E76)
Since F_v is $\geq$0.05, the value remains the same in cell F76. The particle fraction is therefore:
Particle fraction: 1 - 1 = 0 (cell G76)
The vapor fraction mass rate is:
Vapor fraction = 4.26E-03 g/sec (cell C76) * 1 (cell F76) / 1 (cell AB25) / 3.333333 (cell L76) / 50 (cell M76)
Vapor fraction = 2.56E-05 g/sec (cell N76)
The particle fraction mass rate is:
Particle fraction = 4.26E-03 g/sec (cell C76) * 0 (cell G76) / 1.32E+08 (cell AB26) / 3.333333 (cell L76) / 50 (cell M76)
Particle fraction = 0 g/sec (cell O76)
The total emission rate is:
Total emission rate: 2.56E-05 g/sec (cell N76) + 0 g/sec (cell O76) = 2.56E-05 g/sec (cell P76)
Mass rate for the 14 coplanar PCBs in PVP12 is:
2.56E-05 (cell N76) * 0.01/14/0.99 = 1.85E-08 g/sec (cells U6 through U19)

7.3 Pretreatment PJM/RFD Analysis

To determine the stack releases from the Pretreatment PJM/RFD Ventilation System (PJV), first the mass rates of all the constituents are calculated in stream PJV04 (the unabated Pretreatment PJM/RFD Vent stream). Then the corresponding DFs for each constituent within the system are applied to these values to obtain the final stack releases (stream PJV11).

7.3.1 PJV04 Stream

This streams depicts the unabated Pretreatment RFD/PJM Ventilation. For all the calculations in this section refer to Table B-4. First the feed rate is obtained followed by the mass rate of the representative constituent at the stream specified. The performance factor for this constituent is calculated and applied to the non-represented compounds to obtain their mass rate.

Group 4
Formamide (75-12-7) feed rate: 4.29E-02 g/sec (cell C147)
Formamide (75-12-7) rate at PJV04 from the PJV04 stream report in Attachment A: 6.80E-08 g/sec (cell H147)
Performance factor for Formamide: 6.80E-08/4.29E-02 = 1.59E-06 (cell I147, also copied to cell O8)

Dibenz[a,j]acridine (224-42-0) feed rate: 4.29E-02 g/sec (cell C92)
Mass rate at PJV04: 4.29E-02 (cell C92) * 1.59E-06 (cell O8) = 6.80E-08 g/sec (cell K92)
Dibenz[a,h]acridine (226-36-8) feed rate: 4.29E-02 g/sec (cell C93)
Mass rate at PJV04: 4.29E-02 (cell C93) * 1.59E-06 (cell O8) = 6.80E-08 g/sec (cell K93)

Group 8
Phenol (108-95-2) feed rate: 4.29E-02 g/sec (cell C39)
Phenol (108-95-2) rate at PJV04 from the PJV04 stream report in Attachment A: 5.94E-08 g/sec (cell H39)
Performance factor for Phenol: 5.94E-08/4.29E-02 = 1.39E-06 (cell I39)

Diethyl Phthalate (84-66-2) feed rate: 4.29E-02 g/sec (cell C180)
Diethyl Phthalate (84-66-2) rate at PJV04 from the PJV04 stream report in Attachment A: 5.46E-08 g/sec (cell H180)
Performance factor for Diethyl Phthalate: 5.46E-08/4.29E-02 = 1.27E-06 (cell I180)

Since this group is represented by the above 2 constituents, an average performance factor is then calculated and applied to the other constituents. Average performance factor is:
(1.39E-06 (cell I39) + 1.27E-06 (cell I180))/2 = 1.33E-06 (cell O12)

Formaldehyde (50-00-0) feed rate: 7.14E-03 g/sec (cell C101)
Mass rate at PJV04: 7.14E-03 (cell C101) * 1.33E-06 (cell O12) = 9.50E-09 g/sec (cell K101)

Propionic Acid (79-09-4) feed rate: 4.29E-02 g/sec (cell C175)
Mass rate at PJV04: 4.29E-02 (cell C175) * 1.33E-06 (cell O12) = 5.70E-08 g/sec (cell K175)

2-Propenoic Acid (79-10-7) feed rate: 5.72E-02 g/sec (cell C176)
Mass rate at PJV04: 5.72E-02 (cell C176) * 1.33E-06 (cell O12) = 7.60E-08 g/sec (cell K176)

Coplanar PCBs
1336-36-3 feed rate at PJV04 from the PJV04 stream report in Attachment A: 1.37E-09 g/sec (cell H76)
Mass rate for the 14 coplanar PCBs in PJV04 is:
1.37E-09 (cell H76) * 0.01/14 = 9.81E-13 g/sec (cells T7 through T20)
This means that the corrected mass rate for 1336-36-3 in PJV04 is:
1.37E-09 g/sec * 0.99 = 1.36E-09 g/sec (cell K76)

7.3.2 PJV11 Stream

For all the calculations for this stream refer to Table B-5 of Attachment B. Input to this spreadsheet is the results from PJV04 stream calculations. These numbers are imported to Column C from cells L4 through L208. Also all the DFs and F_v values are imported from Section 2 of this calculation. The corresponding DFs for this stream are related to the following unit operations: demister and HEPA filters. The calculations for Group 4 and Coplanar PCBs are the only ones shown below. The remaining groups are calculated in the same manner.

Group 4
Formamide (75-12-7) mass rate at PJV04: 6.80E-08 g/sec (cell C147)
To calculate the emission rate, first the F_v value for the constituent is analyzed and the split between vapor and particle is determined. The F_v value is imported to column E from Section 2. The F_v value given pertains to the vapor phase. If this value is less than 0.05, the constituent is assumed to be 100% particle. Column F makes this adjustment to the Fv. Since the F_v value for formamide is 1 (cell E147) no adjustment is required and the value in

cell F147 is 1. The particle fraction is calculated by using the following formula: 1 - F_v. This calculation is done in column G. Since the F_v value is 1 for formamide, the particle fraction is 1 - 1 = 0 (cell G147). Cells P24 through T26 show the applicable DFs for the PT PJV system for vapor and particle constituents. The overall DF is calculated in column T.

The emission rates are then calculated for both the vapor and particle fractions. The vapor mass rate is calculated by multiplying the stream mass rate (cell C147) by the F_v vapor value (cell F147). This value is then divided by the overall vapor DF calculated in cell T25 to arrive to the vapor fraction emission rate (cell K147).
Vapor fraction = 6.80E-08 g/sec (cell C147) * 1 (cell F147) / 1 (cell T25)
Vapor fraction = 6.80E-08 g/sec (cell K147)

The particle mass rate is calculated identically as the vapor fraction except for the overall DF used which is the particle DF shown in cell T26. The particle emission rate is shown on cell L147.
Particle fraction = 6.80E-08 g/sec (cell C147) * 0 (cell G147) / 1.00E+06 (cell T26)
Particle fraction = 0 g/sec (cell L147)

The overall emission rate is then the summation of the vapor and particle fraction:
Total emission rate = vapor fraction + particle fraction
Total emission rate = 6.80E-08 g/sec (cell K147) + 0 g/sec (cell L147) = 6.80E-08 g/sec (cell M147)

Dibenz[a,j]acridine (224-42-0) mass rate at PJV04: 6.80E-08 g/sec (cell C92)
The same process as described above was followed:
F_v vapor: 0.241 (cell E92)
Since F_v is $\geq$0.05, the value remains the same in cell F92. The particle fraction is therefore:
Particle fraction: 1 - 0.241 = 0.759 (cell G92)
The vapor fraction mass rate is:
Vapor fraction = 6.80E-08 g/sec (cell C92) * 0.241 (cell F92) / 1 (cell T25)
Vapor fraction = 1.64E-08 g/sec (cell K92)
The particle fraction mass rate is:
Particle fraction = 6.80E-08 g/sec (cell C92) * 0.759 (cell G92) / 1.00E+06 (cell T26)
Particle fraction = 5.16E-14 g/sec (cell L92)
The total emission rate is:
Total emission rate: 1.64E-08 g/sec (cell K92) + 5.16E-14 g/sec (cell L92) = 1.64E-08 g/sec (cell M92)

Dibenz[a,h]acridine (226-36-8) feed rate mass rate at PJV04: 6.80E-08 g/sec (cell C93)
F_v vapor: 0.285 (cell E93)
Since F_v is $\geq$0.05, the value remains the same in cell F93. The particle fraction is therefore:
Particle fraction: 1 - 0.285 = 0.715 (cell G93)
The vapor fraction mass rate is:
Vapor fraction = 6.80E-08 g/sec (cell C93) * 0.285 (cell F93) / 1 (cell T25)
Vapor fraction = 1.94E-08 g/sec (cell K93)
The particle fraction mass rate is:
Particle fraction = 6.80E-08 g/sec (cell C93) * 0.715 (cell G93) / 1.00E+06 (cell T26)
Particle fraction = 4.86E-14 g/sec (cell L93)
The total emission rate is:
Total emission rate: 1.94E-08 g/sec (cell K93) + 4.86E-14 g/sec (cell L93) = 1.94E-08 g/sec (cell M93)

Column N adjusts the values to zero if they are less than 1E-15, otherwise the value remains the same.

Coplanar PCBs
1336-36-3 corrected mass rate at PJV04: 1.36E-09 g/sec (cell C76)
F_v vapor: 1 (cell E76)
Since F_v is $\geq$0.05, the value remains the same in cell F76. The particle fraction is therefore:
Particle fraction: 1 - 1 = 0 (cell G76)
The vapor fraction mass rate is:
Vapor fraction = 1.36E-09 g/sec (cell C76) * 1 (cell F76) / 1 (cell T25)
Vapor fraction = 1.36E-09 g/sec (cell K76)
The particle fraction mass rate is:
Particle fraction = 1.36E-09 g/sec (cell C76) * 0 (cell G76) / 1.00E+06 (cell T26)
Particle fraction = 0 g/sec (cell L76)
The total emission rate is:
Total emission rate: 1.36E-09 g/sec (cell K76) + 0 g/sec (cell L76) = 1.36E-09 g/sec (cell M76)
Mass rate for the 14 coplanar PCBs in PJV11 is:
1.36E-09 (cell M76) * 0.01/14/0.99 = 9.81E-13 g/sec (cells S6 through S19)

7.4 LAW Vitrification Analysis

To determine the stack releases from the LAW Melter Offgas System (LVP), first the mass rates of all the constituents are calculated in stream LMP06 (the unabated LAW Melter Offgas stream). From these values, the DFs that correspond to the SBS and WESP are applied to each constituent. These results are representative of LOP08. At this point the LAW Vessel Ventilation header joins the main offgas system. At this point also the mass rates of all the constituents are calculated in stream LVP01 (the unabated LAW Vessel Ventilation Header). The values from these two streams, LOP08 and LVP01, are then added together to represent stream LVP03 (combined offgas stream). From this point on, the corresponding DFs for each constituent within the system are applied to these values to obtain the final stack releases (stream LVP18). See sketch below for a simplified depiction of the process.

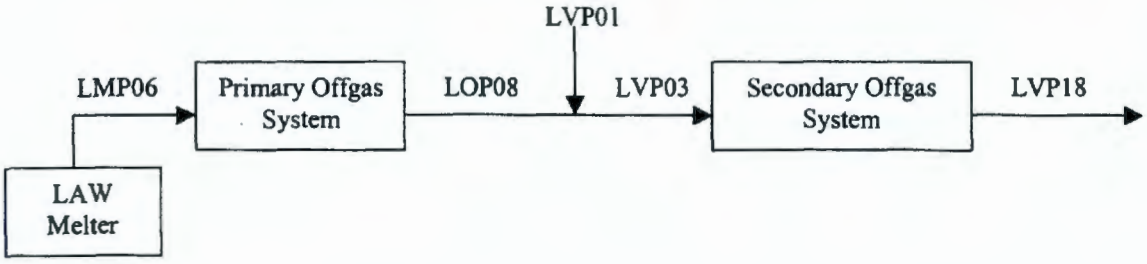

7.4.1 LMP06 Stream

This streams depicts the unabated LAW Melter Offgas. For all the calculations in this section refer to Table B-6. First the feed rate is obtained followed by the mass rate of the representative constituent at the stream specified. The performance factor for this constituent is calculated and applied to the non-represented compounds to obtain their mass rate.

Group 4
Formamide (75-12-7) feed rate: 4.29E-02 g/sec (cell C147)

Formamide (75-12-7) rate at LMP06 from the LMP06 stream report in Attachment A: 3.65E-02 g/sec (cell H147)
Performance factor for Formamide: 3.65E-02/4.29E-02 = 8.51E-01 (cell I147, also copied to cell O8)

Dibenz[a,j]acridine (224-42-0) feed rate: 4.29E-02 g/sec (cell C92)
Mass rate at LMP06: 4.29E-02 (cell C92) * 8.51E-01 (cell O8) = 3.65E-02 g/sec (cell K92)
Dibenz[a,h]acridine (226-36-8) feed rate: 4.29E-02 g/sec (cell C93)
Mass rate at LMP06: 4.29E-02 (cell C92) * 8.51E-01 (cell O8) = 3.65E-02 g/sec (cell K93)

Group 8
Phenol (108-95-2) feed rate: 4.29E-02 g/sec (cell C39)
Phenol (108-95-2) rate at LMP06 from the LMP06 stream report in Attachment A: 1.78E-02 g/sec (cell H39)
Performance factor for Phenol: 1.78E-02/4.29E-02 = 4.16E-01 (cell I39)

Diethyl Phthalate (84-66-2) feed rate: 4.29E-02 g/sec (cell C180)
Diethyl Phthalate (84-66-2) rate at LMP06 from the LMP06 stream report in Attachment A: 1.12E-02 g/sec (cell H180)
Performance factor for Diethyl Phthalate: 1.12E-02/4.29E-02 = 2.62E-01 (cell I180)

Since this group is represented by the above 2 constituents, an average performance factor is then calculated and applied to the other constituents. Average performance factor is:
(4.16E-01 (cell I39) + 2.62E-01 (cell I180))/2 = 3.39E-01 (cell O12)

Formaldehyde (50-00-0) feed rate: 7.14E-03 g/sec (cell C101)
Mass rate at LMP06: 7.14E-03 (cell C101) * 3.39E-01 (cell O12) = 2.42E-03 g/sec (cell K101)

Propionic Acid (79-09-4) feed rate: 4.29E-02 g/sec (cell C175)
Mass rate at LMP06: 4.29E-02 (cell C175) * 3.39E-01 (cell O12) = 1.42E-02 g/sec (cell K175)

2-Propenoic Acid (79-10-7) feed rate: 5.72E-02 g/sec (cell C176)
Mass rate at LMP06: 5.72E-02 (cell C176) * 3.39E-01 (cell O12) = 1.94E-02 g/sec (cell K176)

Column L adjusts the values to zero if they are less than 1E-15, otherwise the value remains the same.

Coplanar PCBs
1336-36-3 feed rate at LMP06 from the LMP06 stream report in Attachment A: 5.88E-11 g/sec (cell H76)
Mass rate for the 14 coplanar PCBs in LMP06 is:
5.88E-11 (cell H76) * 0.01/14 = 4.20E-14 g/sec (cells T7 through T20)
Thus the corrected mass rate of 1336-36-3 in LMP06 is:
5.88E-11 g/sec * 0.99 = 5.82E-11 g/sec (cell K76)

7.4.2 LVP01 Stream

This streams depicts the unabated LAW Vessel Ventilation. This stream is represented by the addition of streams LFP06, RLD32, RLD33, and RLD34. For all the calculations in this section refer to Table B-7. First the feed rate is obtained followed by the mass rate of the representative constituent at the stream specified. The performance factor for this constituent is calculated and applied to the non-represented compounds to obtain their mass rate.

Group 4
Formamide (75-12-7) feed rate: 4.29E-02 g/sec (cell C147)

Formamide (75-12-7) rate at LVP01 from the addition of stream reports LFP06, RLD32, RLD33, and RLD34 in Attachment A:
2.02E-07 g/sec (Table A-7) + 0 g/sec (Table A-8) + 0 g/sec (Table A-9) + 0 g/sec (Table A-10) = 2.02E-07 g/sec (cell H147)
Performance factor for Formamide: 2.02E-07/4.29E-02 = 4.71E-06 (cell I147, also copied to cell O8)

Dibenz[a,j]acridine (224-42-0) feed rate: 4.29E-02 g/sec (cell C92)
Mass rate at LVP01: 4.29E-02 (cell C92) * 4.71E-06 (cell O8) = 2.02E-07 g/sec (cell K92)
Dibenz[a,h]acridine (226-36-8) feed rate: 4.29E-02 g/sec (cell C93)
Mass rate at LVP01: 4.29E-02 (cell C93) * 4.71E-06 (cell O8) = 2.02E-07 g/sec (cell K93)

Group 8
Phenol (108-95-2) feed rate: 4.29E-02 g/sec (cell C39)
Phenol (108-95-2) rate at LVP01 from the addition of stream reports LFP06, RLD32, RLD33, and RLD34 in Attachment A: 2.36E-05g/sec (cell H39)
Performance factor for Phenol: 2.36E-05/4.29E-02 = 5.51E-04 (cell I39)

Diethyl Phthalate (84-66-2) feed rate: 4.29E-02 g/sec (cell C180)
Diethyl Phthalate (84-66-2) rate at LVP01 from the addition of stream reports LFP06, RLD32, RLD33, and RLD34 in Attachment A: 2.72E-05 g/sec (cell H180)
Performance factor for Diethyl Phthalate: 2.72E-05/4.29E-02 = 6.35E-04 (cell I180)

Since this group is represented by the above 2 constituents, an average performance factor is then calculated and applied to the other constituents. Average performance factor is:
(5.51E-04(cell I39) + 6.35E-04 (cell I180))/2 = 5.93E-04 (cell O12)

Formaldehyde (50-00-0) feed rate: 7.14E-03 g/sec (cell C101)
Mass rate at LVP01: 7.14E-03 (cell C101) * 5.93E-04 (cell O12) = 4.24E-06 g/sec (cell K101)

Propionic Acid (79-09-4) feed rate: 4.29E-02 g/sec (cell C175)
Mass rate at LVP01: 4.29E-02 (cell C175) * 5.93E-04 (cell O12) = 2.54E-05 g/sec (cell K175)

2-Propenoic Acid (79-10-7) feed rate: 5.72E-02 g/sec (cell C176)
Mass rate at LVP01: 5.72E-02 (cell C176) * 5.93E-04 (cell O12) = 3.39E-05 g/sec (cell K176)

Column L adjusts the values to zero if they are less than 1E-15, otherwise the value remains the same.

Coplanar PCBs
1336-36-3 feed rate at LVP01 from the addition of stream reports LFP06, RLD32, RLD33, and RLD34 in Attachment A: 1.47E-10 g/sec (cell H76)
Mass rate for the 14 coplanar PCBs in LVP01 is:
1.47E-10 (cell H76) * 0.01/14 = 1.05E-13 g/sec (cells T7 through T20)
Thus the corrected mass rate for 1336-36-3 in LVP01 is:
1.47E-10 g/sec * 0.99 = 1.45E-10 g/sec (cell K76)

7.4.3 LVP18 Stream

For all the calculations for this stream refer to Table B-8 of Attachment B. Input to this spreadsheet is the results from LMP06 and LVP01 stream calculations. The numbers for LMP06 were imported to Column C (cells C4

through C208). The ones for stream LVP01 were imported to column K (cells K4 through K208). Also all the DFs and F_v values were imported from Section 2 of this calculation. The corresponding DFs for this stream are related to the following unit operations: SBS, WESP, HEPA filters, TCO, and caustic scrubber. The calculations for Group 4 and Coplanar PCBs are the only ones shown below. The remaining groups are calculated in the same manner.

First the intermediate stream, LOP08, is calculated by applying the DFs for the SBS and WESP to stream LMP06. At this point, the values calculated for LVP01 are added to LOP08 to represent stream LVP03. The DFs for the rest of the unit operations in the system are then applied to the values in LVP03. Final results represent the composition of stream LVP18.

7.4.3.1 LOP08 Calculation

Group 4

Formamide (75-12-7) mass rate at LMP06: 3.65E-02 g/sec (cell C147)
To calculate the emission rate, first the F_v value for the constituent is analyzed and the split between vapor and particle is determined. The F_v value is imported to column E from Section 2. The F_v value given pertains to the vapor phase. If this value is less than 0.05, the constituent is assumed to be 100% particle. Column F makes this adjustment to the Fv. Since the F_v value for formamide is 1 (cell E147) no adjustment is required and the value in cell F147 is 1. The particle fraction is calculated by using the following formula: 1 - F_v. This calculation is done in column G. Since the F_v value is 1 for formamide, the particle fraction is 1 - 1 = 0 (cell G147). Cells R5 through U9 show the applicable DFs for the LOP Primary Offgas system for vapor and particle constituents. The overall DF is calculated in column U.

The emission rates are then calculated for both the vapor and particle fractions. The vapor mass rate is calculated by multiplying the stream mass rate (cell C147) by the F_v vapor value (cell F147). This value is then divided by the overall vapor DF calculated in cell U8 to arrive to the vapor fraction emission rate (cell H147).
Vapor fraction = 3.65E-02 g/sec (cell C147) * 1 (cell F147) / 1 (cell U8)
Vapor fraction = 3.65E-02 g/sec (cell H147)

The particle mass rate is calculated identically as the vapor fraction except for the overall DF used which is the particle DF shown in cell U9. The particle emission rate is shown on cell I147.
Particle fraction = 3.65E-02 g/sec (cell C147) * 0 (cell G147) / 400 (cell U9)
Particle fraction = 0 g/sec (cell I147)

The overall emission rate is then the summation of the vapor and particle fraction:
Total emission rate = vapor fraction + particle fraction
Total emission rate = 3.65E-02 g/sec (cell H147) + 0 g/sec (cell I147) = 3.65E-02 g/sec (cell J147)

Dibenz[a,j]acridine (224-42-0) mass rate at LMP06: 3.65E-02 g/sec (cell C92)
The same process as described above was followed:
F_v vapor: 0.241 (cell E92)
Since F_v is $\geq$0.05, the value remains the same in cell F92. The particle fraction is therefore:
Particle fraction: 1 - 0.241 = 0.759 (cell G92)
The vapor fraction mass rate is:
Vapor fraction = 3.65E-02 g/sec (cell C92) * 0.241 (cell F92) / 1 (cell U8)
Vapor fraction = 8.79E-03 g/sec (cell H92)
The particle fraction mass rate is:
Particle fraction = 3.65E-02 g/sec (cell C92) * 0.759 (cell G92) / 400 (cell U9)

Particle fraction = 6.92E-05 g/sec (cell I92)
The total emission rate is:
Total emission rate: 8.79E-03 g/sec (cell H92) + 6.92E-05 g/sec (cell I92) = 8.86E-03 g/sec (cell J92)

Dibenz[a,h]acridine (226-36-8) feed rate mass rate at LMP06: 3.65E-02 g/sec (cell C93)
F_v vapor: 0.285 (cell E93)
Since F_v is $\geq$0.05, the value remains the same in cell F93. The particle fraction is therefore:
Particle fraction: 1 - 0.285 = 0.715 (cell G93)
The vapor fraction mass rate is:
Vapor fraction = 3.65E-02 g/sec (cell C93) * 0.285 (cell F93) / 1 (cell U8)
Vapor fraction = 1.04E-02 g/sec (cell H93)
The particle fraction mass rate is:
Particle fraction = 3.65E-02 g/sec (cell C93) * 0.714860 (cell G93) / 400 (cell U9)
Particle fraction = 6.52E-05 g/sec (cell I93)
The total emission rate is:
Total emission rate: 1.04E-02 g/sec (cell H93) + 6.52E-05 g/sec (cell I93) = 1.05E-02 g/sec (cell J93)

Coplanar PCBs
1336-36-3 corrected mass rate at LMP06: 5.82E-11 g/sec (cell C76)
F_v vapor: 1 (cell E76)
Since F_v is $\geq$0.05, the value remains the same in cell F76. The particle fraction is therefore:
Particle fraction: 1 - 1 = 0 (cell G76)
The vapor fraction mass rate is:
Vapor fraction = 5.82E-11 g/sec (cell C76) * 1 (cell F76) / 1 (cell U8)
Vapor fraction = 5.82E-11 g/sec (cell H76)
The particle fraction mass rate is:
Particle fraction = 5.82E-11 g/sec (cell C76) * 0 (cell G76) / 400 (cell U9)
Particle fraction = 0 g/sec (cell I76)
The total emission rate is:
Total emission rate: 5.81E-11 g/sec (cell H76) + 0 g/sec (cell I76) = 5.82E-11 g/sec (cell J76)
Mass rate for the 14 coplanar PCBs in LOP08 is:
5.82E-11 (cell J76) * 0.01/14/0.99 = 4.20E-14 g/sec (cells J213 through J226)

7.4.3.2 LVP03 Calculation

The composition of this stream is calculated by summing the mass rates in streams LVP01 and LOP08 for each constituents.

Group 4
Formamide (75-12-7) mass rate at LVP01: 2.02E-07 g/sec (cell K147)
Formamide (75-12-7) mass rate at LOP08: 3.65E-02 g/sec (cell J147)
Formamide (75-12-7) mass rate at LVP03: 2.02E-07 + 3.65E-02 = 3.65E-02 g/sec (cell L147)

Dibenz[a,j]acridine (224-42-0) mass rate at LVP01: 2.02E-07 g/sec (cell K92)
Dibenz[a,j]acridine (224-42-0) mass rate at LOP08: 8.86E-03 g/sec (cell J92)
Dibenz[a,j]acridine (224-42-0) mass rate at LVP03: 2.02E-07 + 8.86E-03 = 8.86E-03 g/sec (cell L92)

Dibenz[a,h]acridine (226-36-8) mass rate at LVP01: 2.02E-07 g/sec (cell K93)
Dibenz[a,h]acridine (226-36-8) mass rate at LOP08: 1.05E-02 g/sec (cell J93)

Dibenz[a,h]acridine (226-36-8) mass rate at LVP03: 2.02E-07 + 1.05E-02 = 1.05E-02 g/sec (cell L93)

Coplanar PCBs
1336-36-3 mass rate at LVP01: 1.45E-10 g/sec (cell K76)
1336-36-3 mass rate at LOP08: 5.82E-11 g/sec (cell J76)
1336-36-3 mass rate at LVP03: 1.45E-10 + 5.82E-11 = 2.03E-10 g/sec (cell L76)
Mass rate for the 14 coplanar PCBs in LVP03 is:
Mass rate at LVP01: 1.05E-13 g/sec (cell K213)
Mass rate at LOP08: 4.20E-14 g/sec (cell J213)
Mass rate at LVP03 = 1.05E-13 g/sec + 4.20E-14 g/sec = 1.47E-13 g/sec (cells L213 through L226)

7.4.3.3 LVP18 Calculation

The composition of this stream is calculated by using the values of stream LVP03 and applying the corresponding DFs from the following units: HEPA Filters, sulfur impregnated carbon bed, TCO, SCR, and Caustic Scrubber. The calculations for Group 4 and Coplanar PCBs are the only ones shown below as all the rest of the calculations are the same.

Group 4
Formamide (75-12-7) mass rate at LVP03: 3.65E-02 g/sec (cell L147)
Cells R11 through X15 show the applicable DFs for the LVP Secondary Offgas system for vapor and particle constituents. The overall DF is calculated in column X.

The emission rates are then calculated for both the vapor and particle fractions. The vapor mass rate is calculated by multiplying the stream mass rate (cell L147) by the F_v vapor value (cell F147). This value is then divided by the overall vapor DF calculated in cell X14 to arrive to the vapor fraction emission rate (cell M147).
Vapor fraction = 3.65E-02 g/sec (cell L147) * 1 (cell F147) / 20 (cell X14)
Vapor fraction = 1.82E-03 g/sec (cell M147)

The particle mass rate is calculated identically as the vapor fraction except for the overall DF used which is the particle DF shown in cell AA15. The particle emission rate is shown on cell N147.
Particle fraction = 3.65E-02 g/sec (cell L147) * 0 (cell G147) / 4.00E+06 (cell X15)
Particle fraction = 0 g/sec (cell N147)

The overall emission rate is then the summation of the vapor and particle fraction:
Total emission rate = vapor fraction + particle fraction
Total emission rate = 1.82E-03 g/sec (cell M147) + 0 g/sec (cell N147) = 1.82E-03 g/sec (cell O147)

Dibenz[a,j]acridine (224-42-0) mass rate at LVP03: 8.86E-03 g/sec (cell L92)
The vapor fraction mass rate is:
Vapor fraction = 8.86E-03 g/sec (cell L92) * 0.241 (cell F92) / 20 (cell X14)
Vapor fraction = 1.07E-04 g/sec (cell M92)
The particle fraction mass rate is:
Particle fraction = 8.86E-03 g/sec (cell L92) * 0.759 (cell G92) / 4.00E+06 (cell X15)
Particle fraction = 1.68E-09 g/sec (cell N92)
The total emission rate is:
Total emission rate: 1.07E-04 g/sec (cell M92) + 1.68E-09 g/sec (cell N92) = 1.07E-04 g/sec (cell O92)

Dibenz[a,h]acridine (226-36-8) feed rate mass rate at LVP03: 1.05E-02 g/sec (cell L93)

The vapor fraction mass rate is:
Vapor fraction = 1.05E-02 g/sec (cell L93) * 0.285 (cell F93) / 20 (cell X14)
Vapor fraction = 1.49E-04 g/sec (cell M93)
The particle fraction mass rate is:
Particle fraction = 1.05E-02 g/sec (cell L93) * 0.715 (cell G93) / 4.00E+06 (cell X15)
Particle fraction = 1.87E-09 g/sec (cell N93)
The total emission rate is:
Total emission rate: 1.49E-04 g/sec (cell M93) + 1.87E-09 g/sec (cell N93) = 1.49E-04 g/sec (cell O93)

Column P adjusts the values to zero if they are less than 1E-15, otherwise they remain the same.

Coplanar PCBs
1336-36-3 mass rate at LVP03: 2.03E-10 g/sec (cell L76)
The vapor fraction mass rate is:
Vapor fraction = 2.03E-10 g/sec (cell L76) * 1 (cell F76) / 20 (cell X14)
Vapor fraction = 1.02E-11 g/sec (cell M76)
The particle fraction mass rate is:
Particle fraction = 2.03E-10 g/sec (cell L76) * 0 (cell G76) / 4.00E+06 (cell X15)
Particle fraction = 0 g/sec (cell N76)
The total emission rate is:
Total emission rate: 1.02E-11 g/sec (cell M76) + 0 g/sec (cell N76) = 1.02E-11 g/sec (cell O76)
Mass rate for the 14 coplanar PCBs in LVP18 is:
1.02E-11 (cell O76) * 0.01/14 = 7.34E-15 g/sec (cells O213 through O226)

7.5 HLW Vitrification Analysis

To determine the stack releases from the HLW Melter Offgas System (HOP), first the mass rates of all the constituents are calculated in stream HMP06 (the unabated HLW Melter Offgas stream). From these values, the DFs that correspond to the SBS and WESP are applied to each constituent. These results are representative of HOP07. At this point the HLW Vessel Ventilation header joins the main offgas system. The mass rates of all the constituents are calculated in stream HOP10 (the unabated HLW Vessel Ventilation Header). The values from these two streams, HOP07 and HOP10, are then added together to represent stream HOP11 (combined offgas stream). From this point on, the corresponding DFs for each constituent within the system are applied to these values to obtain the final stack releases (stream HOP31). See sketch below for a simplified depiction of the process.

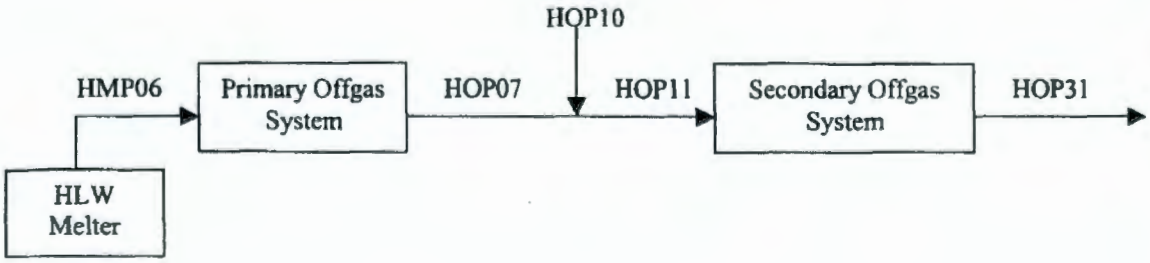

7.5.1 HMP06 Stream

This streams depicts the unabated HLW Melter Offgas. For all the calculations in this section refer to Table B-9. First the feed rate is obtained followed by the mass rate of the representative constituent at the stream specified. The performance factor for this constituent is calculated and applied to the non-represented compounds to obtain their mass rate.

Group 4
Formamide (75-12-7) feed rate: 4.29E-02 g/sec (cell C147)
Formamide (75-12-7) rate at HMP06 from the HMP06 stream report in Attachment A: 2.16E-03 g/sec (cell H147)
Performance factor for Formamide: 2.16E-03/4.29E-02 = 5.04E-02 (cell I147, also copied to cell O8)

Dibenz[a,j]acridine (224-42-0) feed rate: 4.29E-02 g/sec (cell C92)
Mass rate at HMP06: 4.29E-02 (cell C92) * 5.04E-02 (cell O8) = 2.16E-03 g/sec (cell K92)
Dibenz[a,h]acridine (226-36-8) feed rate: 4.29E-02 g/sec (cell C93)
Mass rate at HMP06: 4.29E-02 (cell C93) * 5.04E-02 (cell O8) = 2.16E-03 g/sec (cell K93)

Group 8
Phenol (108-95-2) feed rate: 4.29E-02 g/sec (cell C39)
Phenol (108-95-2) rate at HMP06 from the HMP06 stream report in Attachment A: 1.95E-03 g/sec (cell H39)
Performance factor for Phenol: 1.95E-03/4.29E-02 = 4.56E-02 (cell I39)

Diethyl Phthalate (84-66-2) feed rate: 4.29E-02 g/sec (cell C180)
Diethyl Phthalate (84-66-2) rate at HMP06 from the HMP06 stream report in Attachment A: 1.56E-03 g/sec (cell H180)
Performance factor for Diethyl Phthalate: 1.56E-03/4.29E-02 = 3.65E-02 (cell I180)

Since this group is represented by the above 2 constituents, an average performance factor is then calculated and applied to the other constituents. Average performance factor is:
(4.56E-02 (cell I39) + 3.65E-02 (cell I180))/2 = 4.10E-02 (cell O12)

Formaldehyde (50-00-0) feed rate: 7.14E-03 g/sec (cell C101)
Mass rate at HMP06: 7.14E-03 (cell C101) * 4.10E-02 (cell O12) = 2.93E-04 g/sec (cell K101)

Propionic Acid (79-09-4) feed rate: 4.29E-02 g/sec (cell C175)
Mass rate at HMP06: 4.29E-02 (cell C175) * 4.10E-02 (cell O12) = 1.76E-03 g/sec (cell K175)

2-Propenoic Acid (79-10-7) feed rate: 5.72E-02 g/sec (cell C176)
Mass rate at HMP06: 5.72E-02 (cell C176) * 4.10E-02 (cell O12) = 2.35E-03 g/sec (cell K176)

Column L adjusts the values to zero if they are less than 1E-15, otherwise the values stay the same.

Coplanar PCBs
1336-36-3 feed rate at HMP06 from the HMP06 stream report in Attachment A: 2.10E-10 g/sec (cell H76)
Mass rate for the 14 coplanar PCBs in HMP06 is:
2.10E-10 (cell H76) * 0.01/14 = 1.50E-13 g/sec (cells T7 through T20)
Thus the correct mass rate for 1336-36-3 in HMP06 is:
2.10E-10 g/sec * 0.99 = 2.08E-10 g/sec (cell K76)

7.5.2 HOP10 Stream

This streams depicts the unabated HLW Vessel Ventilation. For all the calculations in this section refer to Table B-10. First the feed rate is obtained followed by the mass rate of the representative constituent at the stream specified. The performance factor for this constituent is calculated and applied to the non-represented compounds to obtain their mass rate.

Group 4
Formamide (75-12-7) feed rate: 4.29E-02 g/sec (cell C147)
Formamide (75-12-7) rate at HOP10 from the HOP10 stream report in Attachment A: 3.02E-08 g/sec (cell H147)
Performance factor for Formamide: 3.02E-08/4.29E-02 = 7.04E-07 (cell I147, also copied to cell O8)

Dibenz[a,j]acridine (224-42-0) feed rate: 4.29E-02 g/sec (cell C92)
Mass rate at HOP10: 4.29E-02 (cell C92) * 7.04E-07 (cell O8) = 3.02E-08 g/sec (cell K92)
Dibenz[a,h]acridine (226-36-8) feed rate: 4.29E-02 g/sec (cell C93)
Mass rate at HOP10: 4.29E-02 (cell C93) * 7.04E-07 (cell O8) = 3.02E-08 g/sec (cell K93)

Group 8
Phenol (108-95-2) feed rate: 4.29E-02 g/sec (cell C39)
Phenol (108-95-2) rate at HOP10 from the HOP10 stream report in Attachment A: 6.53E-06 g/sec (cell H39)
Performance factor for Phenol: 6.53E-06/4.29E-02 = 1.52E-04 (cell I39)

Diethyl Phthalate (84-66-2) feed rate: 4.29E-02 g/sec (cell C180)
Diethyl Phthalate (84-66-2) rate at HOP10 from the HOP10 stream report in Attachment A: 9.59E-06 g/sec (cell H180)
Performance factor for Diethyl Phthalate: 9.59E-06/4.29E-02 = 2.24E-04 (cell I180)

Since this group is represented by the above 2 constituents, an average performance factor is then calculated and applied to the other constituents. Average performance factor is:
(1.52E-04 (cell I39) + 2.24E-04 (cell I180))/2 = 1.88E-04 (cell O12)

Formaldehyde (50-00-0) feed rate: 7.14E-03 g/sec (cell C101)
Mass rate at HOP10: 7.14E-03 (cell C101) * 1.88E-04 (cell O12) = 1.34E-06 g/sec (cell K101)

Propionic Acid (79-09-4) feed rate: 4.29E-02 g/sec (cell C175)
Mass rate at HOP10: 4.29E-02 (cell C175) * 1.88E-04 (cell O12) = 8.06E-06 g/sec (cell K175)

2-Propenoic Acid (79-10-7) feed rate: 5.72E-02 g/sec (cell C176)
Mass rate at HOP10: 5.72E-02 (cell C176) * 1.88E-04 (cell O12) = 1.08E-05 g/sec (cell K176)

Column L adjusts the values to zero if they are less than 1E-15, otherwise they remain the same.

Coplanar PCBs
1336-36-3 feed rate at HOP10 from the HOP10 stream report in Attachment A: 1.70E-09 g/sec (cell H76)
Mass rate for the 14 coplanar PCBs in HOP10 is:
1.70E-09 (cell H76) * 0.01/14 = 1.22E-12 g/sec (cells T7 through T20)
Thus the corrected mass rate for 1336-36-3 in HOP10 is:
1.70E-09 g/sec * 0.99 = 1.69E-09 g/sec (cell K76)

7.5.3 HOP31 Stream

For all the calculations for this stream refer to Table B-11 of Attachment B. Input to this spreadsheet is the results from HMP06 and HOP10 stream calculations. The numbers for HMP06 were imported to Column C (cells C4 through C208). The ones for stream HOP10 are imported to column K (cells K4 through K208). Also all the DFs and F_v values are imported from Section 2 of this calculation. The corresponding DFs for this stream are related to the following unit operations: SBS, WESP, HEME, HEPA filters, sulfur impregnated carbon beds, silver mordenite, TCO, and SCR. The calculations for Group 4 and Coplanar PCBs are the only ones shown below. The remaining groups are calculated in the same manner.

First the intermediate stream, HOP07, is calculated by applying the DFs for the SBS and WESP to stream HMP06. At this point, the values calculated for HOP10 are added to HOP07 to represent stream HOP11. The DFs for the rest of the unit operations in the system are then applied to the values in HOP11. Final results represent the composition of stream HOP31.

7.5.3.1 HOP07 Calculation

Group 4
Formamide (75-12-7) mass rate at HMP06: 2.16E-03 g/sec (cell C147)
To calculate the emission rate, first the F_v value for the constituent is analyzed and the split between vapor and particle is determined. The F_v value is imported to column E from Section 2. The F_v value given pertains to the vapor phase. If this value is less than 0.05, the constituent is assumed to be 100% particle. Column F makes this adjustment to the F_v. Since the F_v value for formamide is 1 (cell E147) no adjustment is required and the value in cell F147 is 1. The particle fraction is calculated by using the following formula: 1 - F_v. This calculation is done in column G. Since the F_v value is 1 for formamide, the particle fraction is 1 - 1 = 0 (cell G147). Cells R5 through U9 show the applicable DFs for the HOP Primary Offgas system for vapor and particle constituents. The overall DF is calculated in column U.

The emission rates are then calculated for both the vapor and particle fractions. The vapor mass rate is calculated by multiplying the stream mass rate (cell C147) by the F_v vapor value (cell F147). This value is then divided by the overall vapor DF calculated in cell U8 to arrive to the vapor fraction emission rate (cell H147).
Vapor fraction = 2.16E-03 g/sec (cell C147) * 1 (cell F147) / 1 (cell U8)
Vapor fraction = 2.16E-03 g/sec (cell H147)

The particle mass rate is calculated identically as the vapor fraction except for the overall DF used which is the particle DF shown in cell U9. The particle emission rate is shown on cell I147.
Particle fraction = 2.16E-03 g/sec (cell C147) * 0 (cell G147) / 400 (cell U9)
Particle fraction = 0 g/sec (cell I147)

The overall emission rate is then the summation of the vapor and particle fraction:
Total emission rate = vapor fraction + particle fraction
Total emission rate = 2.16E-03 g/sec (cell H147) + 0 g/sec (cell I147) = 2.16E-03 g/sec (cell J147)

Dibenz[a,j]acridine (224-42-0) mass rate at HMP06: 2.16E-03 g/sec (cell C92)
The same process as described above was followed:
F_v vapor: 0.241 (cell E92)
Since F_v is $\geq$0.05, the value remains the same in cell F92. The particle fraction is therefore:
Particle fraction: 1 - 0.241 = 0.759 (cell G92)

The vapor fraction mass rate is:
Vapor fraction = 2.16E-03 g/sec (cell C92) * 0.241 (cell F92) / 1 (cell U8)
Vapor fraction = 5.21E-04 g/sec (cell H92)
The particle fraction mass rate is:
Particle fraction = 2.16E-03 g/sec (cell C92) * 0.759 (cell G92) / 400 (cell U9)
Particle fraction = 4.10E-06 g/sec (cell I92)
The total emission rate is:
Total emission rate: 5.21E-04 g/sec (cell H92) + 4.10E-06 g/sec (cell I92) = 5.25E-04 g/sec (cell J92)

Dibenz[a,h]acridine (226-36-8) feed rate mass rate at HMP06: 2.16E-03 g/sec (cell C93)
F_v vapor: 0.285 (cell E93)
Since F_v is $\geq$0.05, the value remains the same in cell F93. The particle fraction is therefore:
Particle fraction: 1 - 0.285 = 0.715 (cell G93)
The vapor fraction mass rate is:
Vapor fraction = 2.16E-03 g/sec (cell C93) * 0.285 (cell F93) / 1 (cell U8)
Vapor fraction = 6.16E-04 g/sec (cell H93)
The particle fraction mass rate is:
Particle fraction = 2.16E-03 g/sec (cell C93) * 0.715 (cell G93) / 400 (cell U9)
Particle fraction = 3.86E-06 g/sec (cell I93)
The total emission rate is:
Total emission rate: 6.16E-04 g/sec (cell H93) + 3.86E-06 g/sec (cell I93) = 6.20E-04 g/sec (cell J93)

Coplanar PCBs
1336-36-3 mass rate at HMP06: 2.08E-10 g/sec (cell C76)
F_v vapor: 1 (cell E76)
Since F_v is $\geq$0.05, the value remains the same in cell F76. The particle fraction is therefore:
Particle fraction: 1 - 1 = 0 (cell G76)
The vapor fraction mass rate is:
Vapor fraction = 2.08E-10 g/sec (cell C76) * 1 (cell F76) / 1 (cell U8)
Vapor fraction = 2.08E-10 g/sec (cell H76)
The particle fraction mass rate is:
Particle fraction = 2.08E-10 g/sec (cell C76) * 0 (cell G76) / 400 (cell U9)
Particle fraction = 0 g/sec (cell I76)
The total emission rate is:
Total emission rate: 2.08E-10 g/sec (cell H76) + 0 g/sec (cell I76) = 2.08E-10 g/sec (cell J76)
Mass rate for the 14 coplanar PCBs in HOP07 is:
2.08E-10 (cell J76) * 0.01/14/0.99 = 1.50E-13 g/sec (cells J213 through J226)

7.5.3.2 HOP11 Calculation

The composition of this stream is calculated by summing the mass rates in streams HOP10 and HOP07 for each constituent.

Group 4
Formamide (75-12-7) mass rate at HOP10: 3.02E-08 g/sec (cell K147)
Formamide (75-12-7) mass rate at HOP07: 2.16E-03 g/sec (cell J147)
Formamide (75-12-7) mass rate at HOP11: 3.02E-08 + 2.16E-03 = 2.16E-03 g/sec (cell L147)

Dibenz[a,j]acridine (224-42-0) mass rate at HOP10: 3.02E-08 g/sec (cell K92)

Dibenz[a,j]acridine (224-42-0) mass rate at HOP07: 5.25E-04 g/sec (cell J92)
Dibenz[a,j]acridine (224-42-0) mass rate at HOP11: 3.02E-08 + 5.25E-04 = 5.25E-04 g/sec (cell L92)

Dibenz[a,h]acridine (226-36-8) mass rate at HOP10: 3.02E-08 g/sec (cell K93)
Dibenz[a,h]acridine (226-36-8) mass rate at HOP07: 6.20E-04 g/sec (cell J93)
Dibenz[a,h]acridine (226-36-8) mass rate at HOP11: 3.02E-08 + 6.20E-04 = 6.20E-04 g/sec (cell L93)

Coplanar PCBs
1336-36-3 mass rate at HOP10: 1.69E-09 g/sec (cell K76)
1336-36-3 mass rate at HOP07: 2.08E-10 g/sec (cell J76)
1336-36-3 mass rate at HOP11: 1.69E-09 + 2.08E-10 = 1.89E-09 g/sec (cell L76)
Mass rate for the 14 coplanar PCBs in HOP11 is:
Mass rate at HOP10: 1.22E-12 g/sec (cell K213)
Mass rate at HOP07: 1.50E-13 g/sec (cell J213)
Mass rate at HOP11: 1.22E-12 g/sec + 1.50E-13 g/sec = 1.37E-12 g/sec (cells L213 through L226)

7.5.3.3 HOP31 Calculation

The composition of this stream is calculated by using the values of stream HOP11 and applying the corresponding DFs from the following units: HEME, HEPA Filters, sulfur impregnated carbon beds, silver mordenite, TCO, and SCR. The calculations for Group 4 and Coplanar PCBs are the only ones shown below as all the rest of the calculations are the same.

Group 4
Formamide (75-12-7) mass rate at HOP11: 2.16E-03 g/sec (cell L147)
Cells R11 through Y15 show the applicable DFs for the HOP Secondary Offgas system for vapor and particle constituents. The overall DF is calculated in column Y.

The emission rates are then calculated for both the vapor and particle fractions. The vapor mass rate is calculated by multiplying the stream mass rate (cell L147) by the F_v vapor value (cell F147). This value is then divided by the overall vapor DF calculated in cell Y14 to arrive to the vapor fraction emission rate (cell M147).
Vapor fraction = 2.16E-03 g/sec (cell L147) * 1 (cell F147) / 20 (cell Y14)
Vapor fraction = 1.08E-04 g/sec (cell M147)

The particle mass rate is calculated identically as the vapor fraction except for the overall DF used which is the particle DF shown in cell Y15. The particle emission rate is shown on cell N147.
Particle fraction = 2.16E-03 g/sec (cell L147) * 0 (cell G147) / 3.60E+08 (cell Y15)
Particle fraction = 0 g/sec (cell N147)

The overall emission rate is then the summation of the vapor and particle fraction:
Total emission rate = vapor fraction + particle fraction
Total emission rate = 1.08E-04 g/sec (cell M147) + 0 g/sec (cell N147) = 1.08E-04 g/sec (cell O147)

Dibenz[a,j]acridine (224-42-0) mass rate at HOP11: 5.25E-04 g/sec (cell L92)
The vapor fraction mass rate is:
Vapor fraction = 5.25E-04 g/sec (cell L92) * 0.241 (cell F92) / 20 (cell Y14)
Vapor fraction = 6.32E-06 g/sec (cell M92)
The particle fraction mass rate is:
Particle fraction = 5.25E-04 g/sec (cell L92) * 0.759 (cell G92) / 3.60E+08 (cell Y15)

Particle fraction = 1.11E-12 g/sec (cell N92)
The total emission rate is:
Total emission rate: 6.32E-06 g/sec (cell M92) + 1.11E-12 g/sec (cell N92) = 6.32E-12 g/sec (cell O92)

Dibenz[a,h]acridine (226-36-8) feed rate mass rate at HOP11: 6.20E-04 g/sec (cell L93)
The vapor fraction mass rate is:
Vapor fraction = 6.20E-04 g/sec (cell L93) * 0.285 (cell F93) / 20 (cell Y14)
Vapor fraction = 8.83E-06 g/sec (cell M93)
The particle fraction mass rate is:
Particle fraction = 6.20E-04 g/sec (cell L93) * 0.715 (cell G93) / 3.60E+08 (cell Y15)
Particle fraction = 1.23E-12 g/sec (cell N93)
The total emission rate is:
Total emission rate: 8.83E-06 g/sec (cell M93) + 1.23E-12 g/sec (cell N93) = 8.83E-06 g/sec (cell O93)

Column P adjusts the values to zero if they are less than 1E-15, otherwise the values remain the same.

Coplanar PCBs
1336-36-3 mass rate at HOP11: 1.89E-09 g/sec (cell L76)
The vapor fraction mass rate is:
Vapor fraction = 1.89E-09 g/sec (cell L76) * 1 (cell F76) / 20 (cell Y14)
Vapor fraction = 9.47E-11 g/sec (cell M76)
The particle fraction mass rate is:
Particle fraction = 1.89E-09 g/sec (cell L76) * 0 (cell G76) / 3.60E+08 (cell Y15)
Particle fraction = 0 g/sec (cell N76)
The total emission rate is:
Total emission rate: 9.46E-11 g/sec (cell M76) + 0 g/sec (cell N76) = 9.47E-11 g/sec (cell O76)
Mass rate for the 14 coplanar PCBs in HOP31 is:
9.47E-11 (cell O76) * 0.01/14/0.99 = 6.83E-14 g/sec (cells O213 through O226)

7.6 HLW PJM/RFD Analysis

To determine the stack releases from the HLW PJM/RFD Ventilation System (PJV), first the mass rates of all the constituents are calculated in stream PJV32 (the unabated HLW PJM/RFD Vent stream). Then the corresponding DFs for each constituent within the system are applied to these values to obtain the final stack releases (stream PJV34).

7.6.1 PJV32 Stream

This streams depicts the unabated HLW RFD/PJM Ventilation. For all the calculations in this section refer to Table B-12. First the feed rate is obtained followed by the mass rate of the representative constituent at the stream specified. The performance factor for this constituent is calculated and applied to the non-represented compounds to obtain their mass rate.

Group 4
Formamide (75-12-7) feed rate: 4.29E-02 g/sec (cell C147)
Formamide (75-12-7) rate at PJV32 from the PJV32 stream report in Attachment A: 1.94E-24 g/sec (cell H147)
Performance factor for Formamide: 1.94E-24/4.29E-02 = 4.53E-23 (cell I147, also copied to cell O8)

Dibenz[a,j]acridine (224-42-0) feed rate: 4.29E-02 g/sec (cell C92)

Mass rate at PVP01: 4.29E-02 (cell C92) * 4.53E-23 (cell O8) = 1.94E-24 g/sec (cell K92)
Dibenz[a,h]acridine (226-36-8) feed rate: 4.29E-02 g/sec (cell C93)
Mass rate at PVP01: 4.29E-02 (cell C93) * 4.53E-23 (cell O8) = 1.94E-24 g/sec (cell K93)

Group 8
Phenol (108-95-2) feed rate: 4.29E-02 g/sec (cell C39)
Phenol (108-95-2) rate at PJV32 from the PJV32 stream report in Attachment A: 4.65E-24 g/sec (cell H39)
Performance factor for Phenol: 4.65E-24/4.29E-02 = 1.08E-22 (cell I39)

Diethyl Phthalate (84-66-2) feed rate: 4.29E-02 g/sec (cell C180)
Diethyl Phthalate (84-66-2) rate at PJV32 from the PJV32 stream report in Attachment A: 4.26E-24 g/sec (cell H180)
Performance factor for Diethyl Phthalate: 4.26E-24/4.29E-02 = 9.94E-23 (cell I180)

Since this group is represented by the above 2 constituents, an average performance factor is then calculated and applied to the other constituents. Average performance factor is:
(1.08E-22 (cell I39) + 9.94E-23 (cell I180))/2 = 1.04E-22 (cell O12)

Formaldehyde (50-00-0) feed rate: 7.14E-03 g/sec (cell C101)
Mass rate at PVP01: 7.14E-03 (cell C101) * 1.04E-22 (cell O12) = 7.42E-25 g/sec (cell K101)

Propionic Acid (79-09-4) feed rate: 4.29E-02 g/sec (cell C175)
Mass rate at PVP01: 4.29E-02 (cell C175) * 1.04E-22 (cell O12) = 4.45E-24 g/sec (cell K175)

2-Propenoic Acid (79-10-7) feed rate: 5.72E-02 g/sec (cell C176)
Mass rate at PVP01: 5.72E-02 (cell C176) * 1.04E-22 (cell O12) = 5.94E-24 g/sec (cell K176)

Column L adjusts the values to zero if they are less than 1E-15, otherwise the values remain the same.
Coplanar PCBs
1336-36-3 feed rate at PJV32 from the PJV32 stream report in Attachment A: 1.21E-15 g/sec (cell H76)
Mass rate for the 14 coplanar PCBs in PJV32 is:
1.21E-15 (cell H76) * 0.01/14 = 8.62E-19 g/sec (cells T7 through T20)
Thus the corrected mass rate for 1336-36-3 in PJV32 is:
1.21E-15 g/sec * 0.99 = 1.20E-15 g/sec (cell K76)

7.6.2 PJV34 Stream

For all the calculations for this stream refer to Table B-13 of Attachment B. Input to this spreadsheet is the results from PJV32 stream calculations. These numbers are imported to Column C (cells C4 through C208). Also all the DFs are imported from Section 2 of this calculation. The corresponding DFs for this stream are related to the following unit operations: HEPA filters. The calculations for Group 4 and Coplanar PCBs are the only ones shown below as all the rest of the calculations are the same.

Group 4
Formamide (75-12-7) mass rate at PJV32: 0 g/sec (cell C147)
To calculate the emission rate, first the F_v value for the constituent is analyzed and the split between vapor and particle is determined. The F_v value is imported to column E from Section 2. The F_v value given pertains to the vapor phase. If this value is less than 0.05, the constituent is assumed to be 100% particle. Column F makes this adjustment to the Fv. Since the F_v value for formamide is 1 (cell E147) no adjustment is required and the value in

cell F147 is 1. The particle fraction is calculated by using the following formula: 1 - F_v. This calculation is done in column G. Since the F_v value is 1 for formamide, the particle fraction is 1 - 1 = 0 (cell G147). Cells M25 through P29 show the applicable DFs for the HOP Primary Offgas system for vapor and particle constituents. The overall DF is calculated in column O.

The emission rates are then calculated for both the vapor and particle fractions. The vapor mass rate is calculated by multiplying the stream mass rate (cell C147) by the F_v vapor value (cell F147). This value is then divided by the overall vapor DF calculated in cell P28 to arrive to the vapor fraction emission rate (cell H147).
Vapor fraction = 0 g/sec (cell C147) * 1 (cell F147) / 1 (cell P28)
Vapor fraction = 0 g/sec (cell H147)

The particle mass rate is calculated identically as the vapor fraction except for the overall DF used which is the particle DF shown in cell P29. The particle emission rate is shown on cell I147.
Particle fraction = 0 g/sec (cell C147) * 0 (cell G147) / 200,000 (cell P29)
Particle fraction = 0 g/sec (cell I147)

The overall emission rate is then the summation of the vapor and particle fraction:
Total emission rate = vapor fraction + particle fraction
Total emission rate = 0 g/sec (cell H147) + 0 g/sec (cell I147) = 0 g/sec (cell J147)

Dibenz[a,j]acridine (224-42-0) mass rate at PJV32: 0 g/sec (cell C92)
The same process as described above was followed:
F_v vapor: 0.241 (cell E92)
Since F_v is $\geq$0.05, the value remains the same in cell F92. The particle fraction is therefore:
Particle fraction: 1 - 0.241 = 0.759 (cell G92)
The vapor fraction mass rate is:
Vapor fraction = 0 g/sec (cell C92) * 0.241 (cell F92) / 1 (cell P28)
Vapor fraction = 0 g/sec (cell H92)
The particle fraction mass rate is:
Particle fraction = 0 g/sec (cell C92) * 0.759 (cell G92) / 200,000 (cell P29)
Particle fraction = 0 g/sec (cell I92)
The total emission rate is:
Total emission rate: 0 g/sec (cell H92) + 0 g/sec (cell I92) = 0 g/sec (cell J92)

Dibenz[a,h]acridine (226-36-8) feed rate mass rate at PJV32: 0 g/sec (cell C93)
F_v vapor: 0.285 (cell E93)
Since F_v is $\geq$0.05, the value remains the same in cell F93. The particle fraction is therefore:
Particle fraction: 1 - 0.285 = 0.715 (cell G93)
The vapor fraction mass rate is:
Vapor fraction = 0 g/sec (cell C93) * 0.285 (cell F93) / 1 (cell P28)
Vapor fraction = 0 g/sec (cell H93)
The particle fraction mass rate is:
Particle fraction = 0 g/sec (cell C93) * 0.715 (cell G93) / 200,000 (cell P29)
Particle fraction = 0 g/sec (cell I93)
The total emission rate is:
Total emission rate: 0 g/sec (cell H93) + 0 g/sec (cell I93) = 0 g/sec (cell J93)

Column K adjusts the values to zero if they are less than 1E-15, otherwise the values remain the same.

Coplanar PCBs
1336-36-3 corrected mass rate at PJV32: 1.20E-15 g/sec (cell C76)
F_v vapor: 1 (cell E76)
Since F_v is $\geq$0.05, the value remains the same in cell F76. The particle fraction is therefore:
Particle fraction: 1 - 1 = 0 (cell G76)
The vapor fraction mass rate is:
Vapor fraction = 1.20E-15 g/sec (cell C76) * 1 (cell F76) / 1 (cell P28)
Vapor fraction = 1.20E-15 g/sec (cell H76)
The particle fraction mass rate is:
Particle fraction = 1.20E-15 g/sec (cell C76) * 0 (cell G76) / 200,000 (cell P29)
Particle fraction = 0 g/sec (cell I76)
The total emission rate is:
Total emission rate: 1.20E-15 g/sec (cell H76) + 0 g/sec (cell I76) = 1.20E-15 g/sec (cell J76)
Mass rate for the 14 coplanar PCBs in PJV34 is:
1.20E-15 (cell J76) * 0.01/14/0.99 = 8.62E-19 g/sec (cells J6 through J19)

8 Results and Conclusion

A summary of the results per constituent per stream is presented below. Emissions rates from the non-represented organic compounds in the SSFM have been estimated in this calculation. These rates will be reported in the next revision of the *Integrated Emissions Baseline Report for the Hanford Tank Waste Treatment and Immobilization Plant* (24590-WTP-RPT-PO-03-008). This calculation will be updated each time a new official emissions profile is generated.

CALCULATION SHEET

BY: E. Berrios
DATE: 01/09/06

PROJECT: WTP
JOB NO.: 24590
CALC NO.: 24590-WTP-M4C-FRP-00005
SHEET REV: C
SHEET NO.: 44

	A	B	C	F	I	L	O	R	U	X	AA	AD	AG	AJ
1	Summary of Organic Constituents Emission Rates for the WTP													
2			Feed	Unabated Streams					Abated Streams					
3	CAS #	COPC	FRP01+FRP14	PVP01	PJV04	LMP06	HMP06	PJV32	PVP12	PJV11	LVP18	HOP31	PJV34	
4			WTP Feed	PT Vessel Vent	PT RFD/PJM	LAW Melter	HLW Melter	HLW PJM/RFD	PT Vessel Vent	PT RFD/PJM	LAW Melter	HLW Melter	HLW PJM/RFD	
5			g/sec	g/sec	g/sec	g/sec	g/sec	g/sec	g/sec	g/sec	g/sec	g/sec	g/sec	
6	100-00-5	p-Nitrochlorobenzene	2.86E-02	1.55E-02	2.20E-08	4.26E-04	8.68E-05	5.65E-11	3.10E-07	2.20E-08	2.17E-05	4.49E-06	5.65E-11	
7	100-21-0	p-Phthalic acid	4.29E-02	2.38E-09	1.90E-07	4.14E-01	2.28E-03	1.43E-09	2.38E-12	1.90E-07	2.07E-02	1.14E-04	1.43E-09	
8	100-41-4	Ethyl benzene	2.86E-03	2.86E-03	1.66E-09	0.00E+00	0.00E+00	0.00E+00	2.86E-07	1.66E-09	0.00E+00	0.00E+00	0.00E+00	
9	100-42-5	Styrene	2.86E-03	2.86E-03	1.66E-09	0.00E+00	0.00E+00	0.00E+00	2.86E-07	1.66E-09	0.00E+00	5.21E-15	0.00E+00	
10	10061-01-5	cis-1,3-Dichloropropene	2.86E-03	2.85E-03	1.66E-09	0.00E+00	1.51E-15	0.00E+00	2.85E-05	1.66E-09	0.00E+00	1.49E-14	0.00E+00	
11	10061-02-6	trans-1,3-Dichloropropene	2.86E-03	2.83E-03	1.67E-09	0.00E+00	6.76E-14	0.00E+00	5.65E-05	1.67E-09	1.02E-15	2.08E-13	0.00E+00	
12	101-55-3	4-Bromophenylphenyl ether	4.29E-02	3.49E-02	2.69E-08	4.33E-08	4.07E-08	0.00E+00	2.09E-04	2.69E-08	3.24E-09	4.97E-09	0.00E+00	
13	101-84-8	Diphenyl ether	7.14E-03	6.98E-03	4.21E-09	2.72E-13	1.22E-12	0.00E+00	2.79E-05	4.21E-09	1.25E-13	2.03E-12	0.00E+00	
14	106-35-4	3-Heptanone	2.86E-03	2.33E-03	1.79E-09	2.88E-09	2.72E-09	0.00E+00	2.33E-07	1.79E-09	2.16E-10	3.31E-10	0.00E+00	
15	106-42-3	p-Xylene (Dimethyl benzene)	7.14E-03	7.15E-03	4.15E-09	0.00E+00	1.28E-15	0.00E+00	7.15E-06	4.15E-09	0.00E+00	1.31E-14	0.00E+00	
16	106-46-7	1,4-Dichlorobenzene	2.86E-03	2.79E-03	1.68E-09	0.00E+00	4.89E-13	0.00E+00	2.79E-05	1.68E-09	4.90E-15	8.13E-13	0.00E+00	
17	106-88-7	1,2-Epoxybutane	7.14E-03	6.33E-03	4.36E-09	4.38E-10	6.95E-10	0.00E+00	6.33E-07	4.36E-09	4.42E-11	1.46E-10	0.00E+00	
18	106-93-4	Ethylene dibromide (Dibromethane)	2.86E-03	2.72E-03	1.70E-09	4.42E-13	3.60E-12	0.00E+00	2.72E-04	1.70E-09	1.21E-13	3.22E-12	0.00E+00	
19	106-97-8	Butane	7.14E-03	7.16E-03	4.14E-09	0.00E+00	0.00E+00	0.00E+00	7.16E-07	4.14E-09	0.00E+00	0.00E+00	0.00E+00	
20	106-99-0	1,3-Butadiene	2.86E-03	2.86E-03	1.66E-09	0.00E+00	0.00E+00	0.00E+00	2.86E-07	1.66E-09	0.00E+00	0.00E+00	0.00E+00	
21	107-02-8	Acrolein	7.14E-03	5.82E-03	4.48E-09	7.21E-09	6.79E-09	0.00E+00	5.82E-07	4.48E-09	5.40E-10	8.28E-10	0.00E+00	
22	107-05-1	3-Chloropropene (Allyl chloride)	2.86E-03	2.86E-03	1.66E-09	0.00E+00	0.00E+00	0.00E+00	2.86E-07	1.66E-09	0.00E+00	0.00E+00	0.00E+00	
23	107-06-2	1,2-Dichloroethane (Ethylene chloride)	2.86E-03	2.83E-03	1.67E-09	0.00E+00	6.76E-14	0.00E+00	2.83E-07	1.67E-09	1.02E-15	2.08E-13	0.00E+00	
24	107-12-0	Propionitrile	7.14E-03	2.97E-03	5.17E-09	5.34E-07	2.75E-07	6.21E-14	2.97E-07	5.17E-09	3.11E-08	1.97E-08	6.21E-14	
25	107-13-1	Acrylonitrile	1.43E-02	1.16E-02	8.95E-09	1.44E-08	1.36E-08	0.00E+00	1.16E-06	8.95E-09	1.08E-09	1.66E-09	0.00E+00	
26	107-18-6	2-Propene-1-ol	4.29E-02	2.33E-02	3.30E-08	6.40E-04	1.30E-04	8.48E-11	2.33E-06	3.30E-08	3.25E-05	6.73E-06	8.48E-11	
27	107-31-3	Formic acid, methyl ester	4.29E-02	3.80E-02	2.61E-08	2.63E-09	4.17E-09	0.00E+00	3.80E-06	2.61E-08	2.65E-10	8.78E-10	0.00E+00	
28	107-66-4	Dibutylphosphate	4.29E-02	5.07E-05	6.77E-08	3.56E-02	2.17E-03	0.00E+00	5.05E-09	6.74E-08	1.76E-03	1.07E-04	0.00E+00	
29	107-87-9	2-Pentanone	1.43E-02	1.16E-02	8.95E-09	1.44E-08	1.36E-08	0.00E+00	1.16E-06	8.95E-09	1.08E-09	1.66E-09	0.00E+00	
30	108-03-2	1-Nitropropane	4.29E-02	3.49E-02	2.69E-08	4.33E-08	4.07E-08	0.00E+00	3.49E-06	2.69E-08	3.24E-09	4.97E-09	0.00E+00	
31	108-05-4	Vinyl acetate	4.29E-02	4.06E-02	2.56E-08	3.57E-11	1.50E-10	0.00E+00	4.06E-06	2.56E-08	6.63E-12	8.39E-11	0.00E+00	
32	108-10-1	Hexone (4-Methyl-2-pentanone or MIBK)	7.14E-03	5.82E-03	4.48E-09	7.21E-09	6.79E-09	0.00E+00	5.82E-07	4.48E-09	5.40E-10	8.28E-10	0.00E+00	
33	108-20-3	Bis(isopropyl)ether	7.14E-03	6.97E-03	4.21E-09	0.00E+00	1.22E-12	0.00E+00	6.97E-07	4.21E-09	1.22E-14	2.03E-12	0.00E+00	
34	108-38-3	m-Xylene (Dimethyl benzene)	7.14E-03	7.15E-03	4.15E-09	0.00E+00	1.28E-15	0.00E+00	7.15E-06	4.15E-09	0.00E+00	1.31E-14	0.00E+00	
35	108-39-4	m-Cresol	7.14E-03	6.00E-04	7.44E-09	4.99E-04	9.71E-05	0.00E+00	3.00E-07	7.44E-09	2.51E-05	4.94E-06	0.00E+00	
36	108-87-2	Methylcyclohexane	7.14E-03	7.17E-03	4.15E-09	0.00E+00	0.00E+00	0.00E+00	7.17E-07	4.15E-09	0.00E+00	0.00E+00	0.00E+00	
37	108-88-3	Toluene	2.86E-03	2.86E-03	1.66E-09	0.00E+00	0.00E+00	0.00E+00	2.86E-07	1.66E-09	0.00E+00	0.00E+00	0.00E+00	
38	108-90-7	Chlorobenzene	2.86E-03	2.86E-03	1.66E-09	0.00E+00	0.00E+00	0.00E+00	2.86E-05	1.66E-09	0.00E+00	5.21E-15	0.00E+00	
39	108-93-0	Cyclohexanol	7.14E-03	3.88E-03	5.49E-09	1.07E-04	2.17E-05	1.41E-11	1.94E-07	5.49E-09	5.42E-06	1.12E-06	1.41E-11	
40	108-94-1	Cyclohexanone	7.14E-03	1.24E-03	5.88E-09	2.24E-05	7.17E-06	0.00E+00	6.20E-08	5.88E-09	1.16E-06	3.93E-07	0.00E+00	
41	108-95-2	Phenol	4.29E-02	1.31E-03	5.94E-08	1.78E-02	1.95E-03	0.00E+00	6.56E-06	5.94E-08	8.93E-04	9.80E-05	0.00E+00	
42	109-66-0	n-Pentane	7.14E-03	7.16E-03	4.14E-09	0.00E+00	0.00E+00	0.00E+00	7.16E-07	4.14E-09	0.00E+00	0.00E+00	0.00E+00	
43	109-99-9	Tetrahydrofuran	2.86E-03	1.19E-03	2.07E-09	2.14E-07	1.10E-07	2.48E-14	1.19E-07	2.07E-09	1.25E-08	7.87E-09	2.48E-14	
44	110-12-3	5-Methyl-2-hexanone	2.86E-03	2.53E-03	1.74E-09	1.75E-10	2.78E-10	0.00E+00	2.53E-07	1.74E-09	1.77E-11	5.85E-11	0.00E+00	
45	110-43-0	2-Heptanone	2.86E-03	2.53E-03	1.74E-09	1.75E-10	2.78E-10	0.00E+00	2.53E-07	1.74E-09	1.77E-11	5.85E-11	0.00E+00	
46	110-54-3	n-Hexane	7.14E-03	7.16E-03	4.14E-09	0.00E+00	0.00E+00	0.00E+00	7.16E-07	4.14E-09	0.00E+00	0.00E+00	0.00E+00	
47	110-62-3	n-Valeraldehyde	4.29E-02	3.80E-02	2.61E-08	2.63E-09	4.17E-09	0.00E+00	3.80E-06	2.61E-08	2.65E-10	8.78E-10	0.00E+00	
48	110-82-7	Cyclohexane	7.14E-03	7.17E-03	4.15E-09	0.00E+00	0.00E+00	0.00E+00	7.17E-07	4.15E-09	0.00E+00	0.00E+00	0.00E+00	
49	110-83-8	Cyclohexene	2.86E-03	2.86E-03	1.66E-09	0.00E+00	0.00E+00	0.00E+00	2.86E-07	1.66E-09	0.00E+00	0.00E+00	0.00E+00	
50	110-86-1	Pyridine	1.43E-02	2.48E-03	1.18E-08	4.49E-05	1.43E-05	0.00E+00	2.48E-07	1.18E-08	2.33E-06	7.87E-07	0.00E+00	
51	111-65-9	n-Octane	7.14E-03	7.16E-03	4.14E-09	0.00E+00	0.00E+00	0.00E+00	7.16E-07	4.14E-09	0.00E+00	0.00E+00	0.00E+00	
52	111-76-2	Ethylene glycol monobutyl ether	4.29E-02	3.60E-03	4.47E-08	3.00E-03	5.83E-04	0.00E+00	1.80E-07	4.47E-08	1.51E-04	2.97E-05	0.00E+00	
53	111-84-2	n-Nonane	7.14E-03	7.16E-03	4.14E-09	0.00E+00	0.00E+00	0.00E+00	3.58E-07	4.14E-09	0.00E+00	0.00E+00	0.00E+00	
54	117-81-7	Bis(2-ethylhexyl)phthalate (DEHP)	4.29E-02	1.48E-01	7.17E-08	1.86E-02	1.25E-03	7.93E-10	3.84E-07	9.32E-09	1.63E-05	1.11E-06	1.03E-10	
55	117-84-0	n-Dioctyl phthalate	4.29E-02	2.38E-02	3.15E-08	2.23E-04	6.06E-05	4.08E-11	4.05E-07	2.68E-08	8.29E-06	2.34E-06	3.47E-11	
56	120-12-7	Anthracene	4.29E-02	2.02E-02	3.04E-08	1.19E-06	7.26E-07	7.45E-13	4.02E-06	3.03E-08	7.56E-08	5.90E-08	7.44E-13	
57	120-82-1	1,2,4-Trichlorobenzene	7.14E-03	7.07E-03	4.18E-09	0.00E+00	1.69E-13	0.00E+00	1.41E-05	4.18E-09	2.55E-15	5.20E-13	0.00E+00	
58	120-83-2	2,4-Dichlorophenol	4.29E-02	2.33E-02	3.30E-08	6.40E-04	1.30E-04	8.48E-11	1.40E-04	3.30E-08	3.25E-05	6.73E-06	8.48E-11	
59	121-44-8	Triethylamine	7.14E-03	6.33E-03	4.36E-09	4.38E-10	6.95E-10	0.00E+00	6.33E-07	4.36E-09	4.42E-11	1.46E-10	0.00E+00	
60	121-69-7	Dimethylaniline	7.14E-03	2.97E-03	5.17E-09	5.34E-07	2.75E-07	6.21E-14	1.49E-07	5.17E-09	3.11E-08	1.97E-08	6.21E-14	
61	122-39-4	N,N-Diphenylamine	1.43E-02	1.57E-03	1.36E-08	4.26E-04	8.68E-05	5.65E-11	6.27E-06	1.36E-08	2.17E-05	4.49E-06	5.65E-11	
62	123-19-3	4-Heptanone	2.86E-03	1.19E-03	2.07E-09	2.14E-07	1.10E-07	2.48E-14	1.19E-07	2.07E-09	1.25E-08	7.87E-09	2.48E-14	
63	123-38-6	n-Propionaldehyde	1.43E-02	1.16E-02	8.95E-09	1.44E-08	1.36E-08	0.00E+00	1.16E-06	8.95E-09	1.08E-09	1.66E-09	0.00E+00	
64	123-51-3	3-Methyl-1-butanol	7.14E-03	1.42E-03	5.73E-09	1.23E-05	4.26E-06	0.00E+00	1.42E-07	5.73E-09	6.48E-07	2.40E-07	0.00E+00	
65	123-86-4	Acetic acid n-butyl ester	1.35E-04	1.28E-04	8.06E-11	1.13E-13	4.72E-13	0.00E+00	1.28E-08	8.06E-11	2.09E-14	2.65E-13	0.00E+00	
66	123-91-1	1,4-Dioxane	1.43E-03	7.76E-04	1.10E-09	2.13E-05	4.34E-06	2.83E-12	7.76E-08	1.10E-09	1.08E-06	2.24E-07	2.83E-12	
67	126-73-8	Tributyl phosphate	2.86E-02	4.56E-04	4.43E-08	1.81E-02	1.51E-03	9.66E-10	9.08E-09	4.42E-08	8.96E-04	7.51E-05	9.62E-10	
68	126-98-7	2-Methyl-2-propenenitrile (Methacrylonitrile)	7.14E-03	6.77E-03	4.26E-09	5.95E-12	2.49E-11	0.00E+00	6.77E-07	4.26E-09	1.10E-12	1.40E-11	0.00E+00	
69	127-18-4	Perchloroethylene (tetrachloroethylene)	2.86E-03	2.86E-03	1.66E-09	0.00E+00	0.00E+00	0.00E+00	2.86E-04	1.66E-09	0.00E+00	0.00E+00	0.00E+00	
70	127-19-5	N,N-Dimethylacetamide	7.14E-03	8.46E-06	1.13E-08	5.93E-03	3.61E-04	0.00E+00	8.46E-10	1.13E-08	2.97E-04	1.81E-05	0.00E+00	
71	128-37-0	2,6-Bis(tert-butyl)-4-methylphenol	1.43E-02	7.93E-03	1.05E-08	7.43E-05	2.02E-05	1.36E-11	1.59E-07	1.05E-08	3.79E-06	1.07E-06	1.36E-11	
72	129-00-0	Pyrene	4.29E-02	9.35E-03	3.79E-08	1.06E-04	3.46E-05	2.45E-11	5.57E-05	3.77E-08	5.56E-06	1.92E-06	2.43E-11	
73	1321-64-8	Pentachloronaphthalene	4.29E-02	4.19E-02	2.53E-08	2.76E-12	7.35E-12	0.00E+00	2.44E-04	2.45E-08	1.23E-12	1.19E-11	0.00E+00	
74	1321-65-9	Trichloronaphthalene	4.29E-02	3.80E-02	2.61E-08	2.63E-09	4.17E-09	0.00E+00	2.28E-04	2.61E-08	2.65E-10	8.76E-10	0.00E+00	
75	132-64-9	Dibenzofuran	4.29E-02	3.41E-02	2.71E-08	5.25E-09	8.33E-09	0.00E+00	2.05E-04	2.70E-08	5.29E-10	1.74E-09	0.00E+00	
76	1335-87-1	Hexachloronaphthalene	4.29E-02	3.49E-02	2.69E-08	4.33E-08	4.07E-08	0.00E+00	2.06E-04	2.64E-08	3.16E-09	4.86E-09	0.00E+00	
77	1335-88-2	Tetrachloronaphthalene	4.29E-02	3.80E-02	2.61E-08	2.63E-09	4.17E-09	0.00E+00	2.26E-04	2.59E-08	2.62E-10	8.68E-10	0.00E+00	
78	1336-36-3	Polychlorinated biphenyls (PCBs)	1.74E-03	4.26E-03	1.36E-09	5.82E-11	2.08E-10	1.20E-15	2.56E-05	1.36E-09	1.02E-11	9.47E-11	1.20E-15	
79	141-78-6	Acetic acid ethyl ester (Ethyl acetate)	1.35E-04	1.10E-04	8.48E-11	1.37E-10	1.29E-10	0.00E+00	1.10E-08	8.48E-11	1.02E-11	1.57E-11	0.00E+00	
80	141-79-7	4-Methyl-3-penten-2-one	4.29E-02	1.78E-02	3.10E-08	3.20E-06	1.65E-06	3.73E-13	1.78E-06	3.10E-08	1.87E-07	1.18E-07	3.73E-13	
81	142-82-5	n-Heptane	7.14E-03	7.16E-03	4.14E-09	0.00E+00	0.00E+00	0.00E+00	7.16E-07	4.14E-09	0.00E+00	0.00E+00	0.00E+00	
82	144-62-7	Oxalic acid	2.14E+00	3.27E-05	3.41E-06	1.83E+00	1.08E-01	0.00E+00	1.63E-07	3.41E-06	9.16E-02	5.40E-03	0.00E+00	
83	156-60-5	trans-1,2-Dichloroethylene	7.14E-03	7.15E-03	4.14E-09	0.00E+00	0.00E+00	0.00E+00	7.15E-07	4.14E-09	0.00E+00	0.00E+00	0.00E+00	
84	1634-04-4	Methyl tert-butyl ether	7.14E-03	6.77E-03	4.26E-09	5.95E-12	2.49E-11	0.00E+00	6.77E-07	4.26E-09	1.10E-12	1.40E-11	0.00E+00	
85	189-55-9	Dibenzo[a,i]pyrene	4.29E-02	5.07E-05	6.77E-08	3.56E-02	2.17E-03	0.00E+00	2.31E-15	6.77E-14	2.26E-11	1.57E-14	0.00E+00	
86	189-64-0	Dibenzo[a,h]pyrene	4.29E-02	5.07E-05	6.77E-08	3.56E-02	2.17E-03	0.00E+00	2.31E-15	6.77E-14	2.26E-11	1.57E-14	0.00E+00	
87	191-24-2	Benzo(g,h,i)perylene	4.29E-02	1.48E-01	7.17E-08	1.86E-02	1.25E-03	7.93E-10	5.75E-05	4.66E-09	4.21E-06	2.93E-07	5.15E-11	
88	191-30-0	Benzo[a,l]pyrene	4.29E-02	5.07E-05	6.77E-08	3.56E-02	2.17E-03	0.00E+00	2.31E-15	6.77E-14	2.26E-11	1.57E-14	0.00E+00	
89	192-65-4	Dibenzo[a,e]pyrene	4.29E-02	5.07E-05	6.77E-08	3.56E-02	2.17E-03	0.00E+00	2.31E-15	6.77E-14	2.26E-11	1.57E-14	0.00E+00	
90	193-39-5	Indeno(1,2,3-cd)pyrene	4.29E-02	2.93E-01	6.86E-08	5.91E-10	2.84E-10	5.96E-15	1.33E-11	6.86E-14	1.26E-15	0.00E+00	0.00E+00	
91	206-44-0	Fluoranthene	4.29E-02	4.19E-02	2.53E-08	1.27E-11	7.39E-12	0.00E+00	2.49E-04	2.51E-08	5.79E-12	1.22E-11	0.00E+00	
92	208-96-8	Acenaphthylene	4.29E-02	2.79E-02	2.85E-08	8.65E-08	8.15E-08	0.00E+00	1.67E-04	2.85E-08	6.48E-09	9.92E-09	0.00E+00	
93	2234-13-1	Octachloronaphthalene	1.35E-04	1.10E-04	8.48E-11	1.37E-10	1.29E-10	0.00E+00	4.16E-07	5.33E-11	4.84E-12	8.36E-12	0.00E+00	
94	224-42-0	Dibenz[a,j]acridine	4.29E-02	6.34E-06	6.80E-08	3.65E-02	2.16E-03	0.00E+00	9.17E-09	1.64E-08	1.07E-04	6.32E-06	0.00E+00	
95	226-36-8	Dibenz[a,h]acridine	4.29E-02	6.34E-06	6.80E-08	3.65E-02	2.16E-03	0.00E+00	1.08E-08	1.94E-08	1.49E-04	8.83E-06	0.00E+00	
96	2551-13-7	Trimethyl benzene	7.14E-03	7.15E-03	4.15E-09	0.00E+00	1.28E-15	0.00E+00	3.57E-06	4.15E-09	0.00E+00	1.31E-14	0.00E+00	
97	26140-60-3	Terphenyls	4.29E-02	4.19E-02	2.53E-08	8.58E-12	7.38E-12	0.00E+00	2.19E-04	2.21E-08	3.39E-12	1.07E-11	0.00E+00	
98	27154-33-2	Trichlorofluoroethane	7.14E-03	7.15E-03	4.14E-09	0.00E+00	0.00E+00	0.00E+00	7.15E-04	4.14E-09	0.00E+00	0.00E+00	0.00E+00	
99	287-92-3	Cyclopentane	7.14E-03	7.17E-03	4.15E-09	0.00E+00	0.00E+00	0.00E+00	7.17E-07	4.15E-09	0.00E+00	0.00E+00	0.00E+00	
100	3697-24-3	5-Methylchrysene	4.29E-02	4.19E-02	2.53E-08	1.37E-11	7.40E-12	0.00E+00	2.07E-04	2.08E-08	5.07E-12	1.01E-11	0.00E+00	
101	3825-26-1	Ammonium perfluorooctanoate	4.29E-02	3.49E-02	2.69E-08	4.33E-08	4.07E-08	0.00E+00	2.09E-04	2.69E-08	3.24E-09	4.97E-09	0.00E+00	
102	4170-30-3	2-Butenaldehyde (2-Butenal or Crotonaldehyde)	7.14E-03	1.25E-03	5.88E-09	2.19E-05	7.02E-06	0.00E+00	1.25E-07	5.88E-09	1.14E-06	3.86E-07	0.00E+00	
103	50-00-0	Formaldehyde	7.14E-03	2.80E-04	9.50E-09	2.42E-03	2.93E-04	0.00E+00	2.80E-08	9.50E-09	1.21E-04	1.47E-05	0.00E+00	
104	50-32-8	Benzo(a)pyrene	2.72E-02	1.40E-03	4.73E-08	2.36E-02	1.59E-03	1.00E-09	2.44E-06	1.37E-08	1.01E-04	6.83E-06	2.91E-10	
105	53-70-3	Dibenzo(a,h)anthracene	2.72E-02	4.33E-04	4.21E-08	1.72E-02	1.44E-03	9.18E-10	1.40E-07	2.27E-09	2.64E-06	2.24E-07	4.96E-11	
106	540-59-0	1,2-Dichloroethylene	7.14E-03	7.15E-03	4.15E-09	0.00E+00	1.28E-15	0.00E+00	7.15E-07	4.15E-09	0.00E+00	1.31E-14	0.00E+00	
107	540-84-1	2,2,4-Trimethylpentane	7.14E-03	7.16E-03	4.14E-09	0.00E+00	0.00E+00	0.00E+00	7.16E-07	4.14E-09	0.00E+00	0.00E+00	0.00E+00	
108	541-73-1	1,3-Dichlorobenzene	2.86E-03	2.86E-03	1.66E-09	0.00E+00	0.00E+00	0.00E+00	2.86E-05	1.66E-09	0.00E+00	5.21E-15	0.00E+00	
109	56-23-5	Carbon tetrachloride	2.86E-03	2.86E-03	1.66E-09	0.00E+00	0.00E+00	0.00E+00	5.73E-04	1.66E-09	0.00E+00	0.00E+00	0.00E+00	
110	563-80-4	3-Methyl-2-butanone	7.14E-03	5.82E-03	4.48E-09	7.21E-09	6.79E-09	0.00E+00	5.82E-07	4.48E-09	5.40E-10	8.28E-10	0.00E+00	
111	56-49-5	3-Methylcholanthrene	4.29E-02	4.30E-02	2.49E-08	0.00E+00	0.00E+00	0.00E+00	9.39E-05	9.05E-09	0.00E+00	0.00E+00	0.00E+00	
112	57-14-7	1,1-Dimethylhydrazine	4.29E-02	8.54E-03	3.44E-08	7.41E-05	2.56E-05	0.00E+00	8.54E-07	3.44E-08	3.89E-06	1.44E-06	0.00E+00	
113	58-90-2	2,3,4,6-Tetrachlorophenol	4.29E-02	7.12E-03	3.56E-08	1.60E-04	5.01E-05	0.00E+00	2.14E-04	3.56E-08	8.30E-06	2.73E-06	0.00E+00	
114	591-78-6	2-Hexanone	7.14E-03	5.82E-03	4.48E-09	7.21E-09	6.79E-09	0.00E+00	5.82E-06	4.48E-09	5.40E-10	8.28E-10	0.00E+00	
115	59-50-7	4-Chloro-3-methylphenol	4.29E-02	2.38E-02	3.15E-08	2.23E-04	6.06E-05	4.08E-11	3.57E-04	3.15E-08	1.14E-05	3.20E-06	4.08E-11	
116	59-89-2	N-Nitrosomorpholine	4.29E-02	4.19E-02	2.53E-08	1.55E-11	7.41E-12	0.00E+00	2.09E-06	2.53E-08	7.14E-12	1.23E-11	0.00E+00	
117	602-87-9	5-Nitroacenaphthene	4.29E-02	3.60E-03	4.47E-08	3.00E-03	5.83E-04	0.00E+00	2.15E-05	4.45E-08	1.50E-04	2.95E-05	0.00E+00	
118	60-29-7	Ethyl ether	4.29E-02	4.24E-02	2.51E-08	0.00E+00	1.01E-12	0.00E+00	4.24E-06	2.51E-08	1.53E-14	3.12E-12	0.00E+00	

CALCULATION SHEET

BY: E. Berrios
DATE: 01/09/06

PROJECT: WTP
JOB NO.: 24590
CALC NO.: 24590-WTP-M4C-FRP-00005
SHEET REV: C
SHEET NO.: 45

	A	B	C	F	I	L	O	R	U	X	AA	AD	AG	AJ
1	Summary of Organic Constituents Emission Rates for the WTP													
2			Feed	Unabated Streams					Abated Streams					
3	CAS #	COPC	FRP01+FRP14	PVP01	PJV04	LMP06	HMP06	PJV32	PVP12	PJV11	LVP18	HOP31	PJV34	
4			WTP Feed	PT Vessel Vent	PT RFD/PJM	LAW Melter	HLW Melter	HLW PJM/RFD	PT Vessel Vent	PT RFD/PJM	LAW Melter	HLW Melter	HLW PJM/RFD	
5			g/sec	g/sec	g/sec	g/sec	g/sec	g/sec	g/sec	g/sec	g/sec	g/sec	g/sec	
119	603-34-9	Triphenylamine	4.29E-02	5.65E-03	3.77E-08	4.46E-04	1.21E-04	8.15E-11	3.39E-05	3.77E-08	2.28E-05	6.39E-06	8.15E-11	
120	60-34-4	Methylhydrazine	7.14E-03	3.88E-03	5.49E-09	1.07E-04	2.17E-05	1.41E-11	3.88E-07	5.49E-09	5.42E-06	1.12E-06	1.41E-11	
121	60-35-5	Acetamide	7.14E-03	8.46E-06	1.13E-08	5.93E-03	3.61E-04	0.00E+00	4.23E-10	1.13E-08	2.97E-04	1.81E-05	0.00E+00	
122	621-64-7	Di-n-Propylnitrosamine (N-Nitroso-di-n-propylamine)	4.29E-02	4.19E-02	2.53E-08	1.37E-11	7.39E-12	8.48E-11	2.09E-06	2.53E-08	5.49E-07	1.23E-11	8.48E-11	
123	624-83-9	Methyl isocyanate	7.14E-03	7.07E-03	4.18E-09	0.00E+00	1.69E-13	0.00E+00	7.07E-06	4.18E-09	2.55E-15	5.20E-13	0.00E+00	
124	627-13-4	Nitric acid, propyl ester	3.57E-03	3.53E-03	2.09E-09	0.00E+00	8.45E-14	0.00E+00	3.53E-07	2.09E-09	1.28E-15	2.60E-13	0.00E+00	
125	62-75-9	N-Nitroso-N,N-dimethylamine (Dimethylnitrosamine)	4.29E-02	3.60E-03	4.47E-08	3.00E-03	5.83E-04	0.00E+00	1.80E-07	4.47E-08	1.51E-04	2.97E-05	0.00E+00	
126	630-20-6	1,1,1,2-Tetrachloroethane	7.14E-03	6.97E-03	4.21E-09	0.00E+00	1.22E-12	0.00E+00	6.97E-04	4.21E-09	1.22E-14	2.03E-12	0.00E+00	
127	64-17-5	Ethyl alcohol	7.14E-03	3.88E-03	5.49E-09	1.07E-04	2.17E-05	1.41E-11	3.88E-07	5.49E-09	5.42E-06	1.12E-06	1.41E-11	
128	64-18-6	Formic acid	1.07E+01	1.71E-01	1.66E-05	6.77E+00	5.67E-01	3.62E-07	1.71E-05	1.66E-05	3.39E-01	2.84E-02	3.62E-07	
129	64-19-7	Acetic acid	1.55E+01	1.51E+01	9.12E-06	5.60E-09	2.67E-09	0.00E+00	1.51E-03	9.12E-06	2.57E-09	4.44E-09	0.00E+00	
130	67-56-1	Methyl alcohol (Methanol)	7.14E-03	3.88E-03	5.49E-09	1.07E-04	2.17E-05	1.41E-11	3.88E-07	5.49E-09	5.42E-06	1.12E-06	1.41E-11	
131	67-63-0	2-Propyl alcohol (Isopropanol; Propan-2-01)	1.43E-03	2.48E-04	1.18E-09	4.49E-06	1.43E-06	0.00E+00	2.48E-08	1.18E-09	2.33E-07	7.87E-08	0.00E+00	
132	67-64-1	2-Propanone (Acetone)	1.43E-02	5.94E-03	1.03E-08	1.07E-06	5.50E-07	1.24E-13	5.94E-07	1.03E-08	6.23E-08	3.93E-08	1.24E-13	
133	67-66-3	Chloroform	2.86E-03	2.86E-03	1.66E-09	0.00E+00	0.00E+00	0.00E+00	1.43E-03	1.66E-09	0.00E+00	5.21E-15	0.00E+00	
134	67-72-1	Hexachloroethane	4.29E-02	4.29E-02	2.49E-08	0.00E+00	7.66E-15	0.00E+00	8.58E-04	2.49E-08	0.00E+00	7.85E-14	0.00E+00	
135	684-16-2	Hexafluoroacetone	7.14E-03	7.15E-03	4.15E-09	0.00E+00	1.28E-15	0.00E+00	7.15E-03	4.15E-09	0.00E+00	1.31E-14	0.00E+00	
136	71-23-8	n-Propyl alcohol	2.86E-03	4.96E-04	2.35E-09	8.97E-06	2.87E-06	0.00E+00	4.96E-08	2.35E-09	4.66E-07	1.57E-07	0.00E+00	
137	71-36-3	n-Butyl alcohol	7.14E-03	1.24E-03	5.88E-09	2.24E-05	7.17E-06	0.00E+00	1.24E-07	5.88E-09	1.16E-06	3.93E-07	0.00E+00	
138	71-43-2	Benzene	2.86E-03	2.86E-03	1.66E-09	0.00E+00	0.00E+00	0.00E+00	2.86E-05	1.66E-09	0.00E+00	0.00E+00	0.00E+00	
139	71-55-6	Methyl chloroform (1,1,1-Trichloroethane)	2.86E-03	2.86E-03	1.66E-09	0.00E+00	0.00E+00	0.00E+00	2.86E-06	1.66E-09	0.00E+00	0.00E+00	0.00E+00	
140	74-83-9	Bromomethane (Methyl bromide)	2.86E-03	2.86E-03	1.66E-09	0.00E+00	0.00E+00	0.00E+00	2.86E-06	1.66E-09	0.00E+00	5.21E-15	0.00E+00	
141	74-87-3	Chloromethane (Methyl chloride)	2.86E-03	2.86E-03	1.66E-09	0.00E+00	0.00E+00	0.00E+00	1.43E-04	1.66E-09	0.00E+00	0.00E+00	0.00E+00	
142	74-97-5	Bromochloromethane	7.14E-03	7.07E-03	4.18E-09	0.00E+00	1.69E-13	0.00E+00	3.53E-03	4.18E-09	2.55E-15	5.20E-13	0.00E+00	
143	74-99-7	Methylacetylene	4.29E-02	4.29E-02	2.49E-08	0.00E+00	0.00E+00	0.00E+00	4.29E-06	2.49E-08	0.00E+00	0.00E+00	0.00E+00	
144	75-00-3	Chloroethane	2.86E-03	2.86E-03	1.66E-09	0.00E+00	0.00E+00	0.00E+00	2.86E-06	1.66E-09	0.00E+00	0.00E+00	0.00E+00	
145	75-01-4	Vinyl chloride (1-Chloroethene)	2.86E-03	2.86E-03	1.66E-09	0.00E+00	0.00E+00	0.00E+00	2.86E-07	1.66E-09	0.00E+00	0.00E+00	0.00E+00	
146	75-05-8	Acetonitrile	7.14E-03	2.58E-03	5.28E-09	8.70E-07	4.29E-07	0.00E+00	2.58E-06	5.28E-09	4.96E-08	2.95E-08	0.00E+00	
147	75-07-0	Acetaldehyde	4.29E-02	1.78E-02	3.10E-08	3.20E-06	1.65E-06	3.73E-13	1.78E-06	3.10E-08	1.87E-07	1.18E-07	3.73E-13	
148	75-09-2	Dichloromethane (Methylene chloride)	2.86E-03	2.86E-03	1.66E-09	0.00E+00	0.00E+00	0.00E+00	5.72E-05	1.66E-09	0.00E+00	5.21E-15	0.00E+00	
149	75-12-7	Formamide	4.29E-02	6.34E-06	6.80E-08	3.65E-02	2.16E-03	0.00E+00	6.34E-10	6.80E-08	1.82E-03	1.08E-04	0.00E+00	
150	75-15-0	Carbon disulfide	7.14E-03	7.15E-03	4.14E-09	0.00E+00	0.00E+00	0.00E+00	7.15E-07	4.14E-09	0.00E+00	0.00E+00	0.00E+00	
151	75-21-8	Ethylene oxide (Oxirane)	1.43E-03	1.27E-03	8.72E-10	8.76E-11	1.39E-10	0.00E+00	1.27E-07	8.72E-10	8.84E-12	2.93E-11	0.00E+00	
152	75-27-4	Bromodichloromethane	7.14E-03	6.97E-03	4.21E-09	0.00E+00	1.22E-12	0.00E+00	1.39E-03	4.21E-09	1.22E-14	2.03E-12	0.00E+00	
153	75-34-3	1,1-Dichloroethane	2.86E-03	2.86E-03	1.66E-09	0.00E+00	0.00E+00	0.00E+00	2.86E-07	1.66E-09	0.00E+00	5.21E-15	0.00E+00	
154	75-35-4	1,1-Dichloroethene (Vinylidene chloride)	7.14E-03	7.16E-03	4.14E-09	0.00E+00	0.00E+00	0.00E+00	7.16E-07	4.14E-09	0.00E+00	0.00E+00	0.00E+00	
155	75-43-4	Dichlorofluoromethane	2.86E-03	2.86E-03	1.66E-09	0.00E+00	0.00E+00	0.00E+00	2.86E-06	1.66E-09	0.00E+00	0.00E+00	0.00E+00	
156	75-45-6	Chlorodifluoromethane	2.86E-03	2.86E-03	1.66E-09	0.00E+00	0.00E+00	0.00E+00	5.73E-05	1.66E-09	0.00E+00	0.00E+00	0.00E+00	
157	75-50-3	Trimethylamine	7.14E-03	5.82E-03	4.48E-09	7.21E-09	6.79E-09	0.00E+00	5.82E-07	4.48E-09	5.40E-10	8.28E-10	0.00E+00	
158	75-52-5	Nitromethane	4.29E-02	1.78E-02	3.10E-08	3.20E-06	1.65E-06	3.73E-13	1.78E-06	3.10E-08	1.87E-07	1.18E-07	3.73E-13	
159	75-55-8	2-Methylaziridine	4.29E-02	7.45E-03	3.53E-08	1.35E-04	4.30E-05	0.00E+00	7.45E-07	3.53E-08	6.99E-06	2.36E-06	0.00E+00	
160	75-61-6	Difluorodibromomethane	7.14E-03	7.16E-03	4.14E-09	0.00E+00	0.00E+00	0.00E+00	7.16E-03	4.14E-09	0.00E+00	0.00E+00	0.00E+00	
161	75-63-8	Trifluorobromomethane	7.14E-03	7.17E-03	4.15E-09	0.00E+00	0.00E+00	0.00E+00	7.17E-03	4.15E-09	0.00E+00	0.00E+00	0.00E+00	
162	75-65-0	2-Methyl-2-propanol	7.14E-03	1.24E-03	5.88E-09	2.24E-05	7.17E-06	0.00E+00	1.24E-07	5.88E-09	1.16E-06	3.93E-07	0.00E+00	
163	75-69-4	Trichlorofluoromethane	7.14E-03	7.15E-03	4.14E-09	0.00E+00	0.00E+00	0.00E+00	7.15E-03	4.14E-09	0.00E+00	0.00E+00	0.00E+00	
164	75-71-8	Dichlorodifluoromethane	7.14E-03	7.17E-03	4.15E-09	0.00E+00	0.00E+00	0.00E+00	7.17E-03	4.15E-09	0.00E+00	0.00E+00	0.00E+00	
165	76-03-9	Trichloroacetic acid	7.14E-03	8.46E-06	1.13E-08	5.93E-03	3.61E-04	0.00E+00	1.69E-07	1.13E-08	2.97E-04	1.81E-05	0.00E+00	
166	76-11-9	1,1,1,2-Tetrachloro-2,2-difluoroethane	4.29E-02	4.30E-02	2.49E-08	0.00E+00	0.00E+00	0.00E+00	4.30E-04	2.49E-08	0.00E+00	0.00E+00	0.00E+00	
167	76-12-0	1,1,2,2-Tetrachloro-1,2-difluoroethane	4.29E-02	4.29E-02	2.48E-08	0.00E+00	0.00E+00	0.00E+00	4.29E-04	2.48E-08	0.00E+00	0.00E+00	0.00E+00	
168	76-13-1	1,2,2-Trichloro-1,1,2-trifluoroethane (Freon 113)	7.14E-03	7.17E-03	4.15E-09	0.00E+00	0.00E+00	0.00E+00	1.79E-04	4.15E-09	0.00E+00	0.00E+00	0.00E+00	
169	76-14-2	1,2-Dichloro-1,1,2,2-tetrafluoroethane	7.14E-03	7.16E-03	4.14E-09	0.00E+00	0.00E+00	0.00E+00	7.16E-03	4.14E-09	0.00E+00	0.00E+00	0.00E+00	
170	76-15-3	Chloropentafluoroethane	7.14E-03	7.16E-03	4.14E-09	0.00E+00	0.00E+00	0.00E+00	7.16E-03	4.14E-09	0.00E+00	0.00E+00	0.00E+00	
171	78-83-1	2-Methylpropyl alcohol (Isobutyl alcohol)	4.29E-02	7.45E-03	3.53E-08	1.35E-04	4.30E-05	0.00E+00	7.45E-07	3.53E-08	6.99E-06	2.36E-06	0.00E+00	
172	78-87-5	1,2-Dichloropropane	2.86E-03	2.86E-03	1.66E-09	0.00E+00	0.00E+00	0.00E+00	2.86E-06	1.66E-09	0.00E+00	5.21E-15	0.00E+00	
173	78-92-2	1-Methylpropyl alcohol (2-Butanol)	2.86E-03	4.96E-04	2.35E-09	8.97E-06	2.87E-06	0.00E+00	4.96E-08	2.35E-09	4.66E-07	1.57E-07	0.00E+00	
174	78-93-3	Methyl ethyl ketone (MEK, 2-Butanone)	7.14E-03	2.97E-03	5.17E-09	5.34E-07	2.75E-07	6.21E-14	2.97E-06	5.17E-09	3.11E-08	1.97E-08	6.21E-14	
175	79-00-5	1,1,2-Trichloroethane	7.14E-03	7.07E-03	4.18E-09	0.00E+00	1.69E-13	0.00E+00	7.07E-07	4.18E-09	2.55E-15	5.20E-13	0.00E+00	
176	79-01-6	Trichloroethylene	7.14E-03	7.16E-03	4.15E-09	0.00E+00	0.00E+00	0.00E+00	7.16E-07	4.15E-09	0.00E+00	0.00E+00	0.00E+00	
177	79-09-4	Propionic acid	4.29E-02	1.68E-03	5.70E-08	1.45E-02	1.76E-03	0.00E+00	1.68E-07	5.70E-08	7.28E-04	8.84E-05	0.00E+00	
178	79-10-7	2-Propenoic acid	5.72E-02	2.24E-03	7.60E-08	1.94E-02	2.35E-03	0.00E+00	2.24E-07	7.60E-08	9.70E-04	1.18E-04	0.00E+00	
179	79-20-9	Methyl acetate	4.29E-02	3.49E-02	2.69E-08	4.33E-08	4.07E-08	0.00E+00	3.49E-06	2.69E-08	3.24E-09	4.97E-09	0.00E+00	
180	79-34-5	1,1,2,2-Tetrachloroethane	1.35E-05	1.28E-05	8.06E-12	1.13E-14	4.72E-14	0.00E+00	1.28E-06	8.06E-12	2.09E-15	2.65E-14	0.00E+00	
181	83-32-9	Acenaphthene	4.29E-02	4.18E-02	2.52E-08	2.45E-12	7.34E-12	0.00E+00	2.51E-04	2.52E-08	1.13E-12	1.22E-11	0.00E+00	
182	84-66-2	Diethyl phthalate	4.29E-02	2.05E-03	5.46E-08	1.12E-02	1.56E-03	0.00E+00	4.11E-08	5.46E-08	5.62E-04	7.87E-05	0.00E+00	
183	84-74-2	Dibutyl phthalate	4.29E-02	4.09E-03	4.93E-08	4.56E-03	6.92E-04	4.43E-10	8.13E-08	4.90E-08	2.28E-04	3.48E-05	4.41E-10	
184	85-01-8	Phenanthrene	4.29E-02	1.78E-02	3.10E-08	3.20E-06	1.65E-06	3.73E-13	1.07E-04	3.10E-08	1.87E-07	1.18E-07	3.72E-13	
185	85-68-7	Butylbenzyl phthalate	4.29E-02	4.09E-03	4.93E-08	4.56E-03	6.92E-04	4.43E-10	7.75E-08	4.67E-08	2.07E-04	3.17E-05	4.20E-10	
186	86-73-7	Fluorene	4.29E-02	3.49E-02	2.69E-08	4.33E-08	4.07E-08	0.00E+00	2.09E-04	2.69E-08	3.24E-09	4.97E-09	0.00E+00	
187	87-68-3	Hexachlorobutadiene	7.14E-03	7.15E-03	4.14E-09	0.00E+00	0.00E+00	0.00E+00	2.86E-05	4.14E-09	0.00E+00	0.00E+00	0.00E+00	
188	88-06-2	2,4,6-Trichlorophenol	4.29E-02	2.33E-02	3.30E-08	6.40E-04	1.30E-04	8.48E-11	1.40E-04	3.30E-08	3.25E-05	6.73E-06	8.48E-11	
189	88-72-2	2-Nitrotoluene	7.14E-03	1.42E-03	5.73E-09	1.23E-05	4.26E-06	0.00E+00	7.12E-08	5.73E-09	6.48E-07	2.40E-07	0.00E+00	
190	88-75-5	2-Nitrophenol	4.29E-02	8.54E-03	3.44E-08	7.41E-05	2.56E-05	0.00E+00	1.28E-04	3.44E-08	3.89E-06	1.44E-06	0.00E+00	
191	88-89-1	Picric acid	4.29E-02	7.76E-08	6.82E-08	3.67E-02	2.16E-03	0.00E+00	1.45E-12	6.37E-08	1.60E-03	9.44E-05	0.00E+00	
192	91-20-3	Naphthalene	1.43E-03	1.30E-03	8.63E-10	3.29E-12	1.29E-11	0.00E+00	6.51E-06	8.63E-10	5.77E-13	6.37E-12	0.00E+00	
193	91-22-5	Quinoline	4.29E-02	3.60E-03	4.47E-08	3.00E-03	5.83E-04	0.00E+00	1.80E-07	4.47E-08	1.51E-04	2.97E-05	0.00E+00	
194	91-58-7	2-Chloronapthalene	4.29E-02	4.06E-02	2.56E-08	3.57E-11	1.50E-10	0.00E+00	2.44E-04	2.56E-08	6.63E-12	8.39E-11	0.00E+00	
195	92-52-4	1,1'-Biphenyl	2.86E-02	2.71E-02	1.70E-08	2.38E-11	9.97E-11	0.00E+00	5.41E-06	1.70E-08	4.42E-12	5.59E-11	0.00E+00	
196	92-93-3	4-Nitrobiphenyl	4.29E-02	2.33E-02	3.30E-08	6.40E-04	1.30E-04	8.48E-11	1.40E-04	3.29E-08	3.25E-05	6.72E-06	8.47E-11	
197	95-13-6	Indene	4.29E-02	4.18E-02	2.52E-08	0.00E+00	7.33E-12	0.00E+00	2.09E-05	2.52E-08	7.35E-14	1.22E-11	0.00E+00	
198	95-47-6	o-Xylene	2.86E-03	2.86E-03	1.66E-09	0.00E+00	0.00E+00	0.00E+00	2.86E-07	1.66E-09	0.00E+00	5.21E-15	0.00E+00	
199	95-48-7	o-Cresol (2-Methylphenol)	7.14E-03	6.00E-04	7.44E-09	4.99E-04	9.71E-05	0.00E+00	3.00E-07	7.44E-09	2.51E-05	4.94E-06	0.00E+00	
200	95-49-8	2-Chlorotoluene	4.29E-02	4.29E-02	2.49E-08	0.00E+00	7.66E-15	0.00E+00	2.14E-06	2.49E-08	0.00E+00	7.85E-14	0.00E+00	
201	95-50-1	o-Dichlorobenzene (1,2-Dichlorobenzene)	2.86E-03	2.79E-03	1.68E-09	0.00E+00	4.89E-13	0.00E+00	2.79E-05	1.68E-09	4.90E-15	8.13E-13	0.00E+00	
202	95-57-8	2-Chlorophenol	4.29E-02	7.45E-03	3.53E-08	1.35E-04	4.30E-05	0.00E+00	3.72E-07	3.53E-08	6.99E-06	2.36E-06	0.00E+00	
203	95-95-4	2,4,5-Trichlorophenol	4.29E-02	3.60E-03	4.47E-08	3.00E-03	5.83E-04	0.00E+00	2.16E-05	4.47E-08	1.51E-04	2.97E-05	0.00E+00	
204	96-22-0	3-Pentanone	1.43E-02	1.16E-02	8.95E-09	1.44E-08	1.36E-08	0.00E+00	1.16E-06	8.95E-09	1.08E-09	1.66E-09	0.00E+00	
205	96-69-5	Bis(3-tert-butyl-4-hydroxy-6-methyl-phenyl)sulfide	4.29E-02	4.29E-02	2.49E-08	0.00E+00	7.66E-15	0.00E+00	2.57E-04	2.49E-08	0.00E+00	7.85E-14	0.00E+00	
206	98-51-1	p-tert-Butyltoluene	4.29E-02	4.29E-02	2.48E-08	0.00E+00	0.00E+00	0.00E+00	2.15E-06	2.48E-08	0.00E+00	0.00E+00	0.00E+00	
207	98-82-8	Cumene	4.29E-02	4.29E-02	2.49E-08	0.00E+00	0.00E+00	0.00E+00	2.15E-06	2.49E-08	0.00E+00	0.00E+00	0.00E+00	
208	98-83-9	alpha-Methylstyrene	7.14E-03	7.15E-03	4.15E-09	0.00E+00	1.28E-15	0.00E+00	3.57E-05	4.15E-09	0.00E+00	1.31E-14	0.00E+00	
209	98-86-2	Acetophenone	2.86E-02	5.16E-03	2.33E-08	7.50E-05	2.45E-05	0.00E+00	2.58E-05	2.33E-08	3.90E-06	1.36E-06	0.00E+00	
210	98-95-3	Nitrobenzene	2.86E-02	5.69E-03	2.29E-08	4.94E-05	1.70E-05	0.00E+00	2.85E-07	2.29E-08	2.59E-06	9.62E-07	0.00E+00	
211	Coplanar PCB's													
212	31508-00-6	2,3',4,4',5-Pentachlorobiphenyl (PBC 118)	1.24E-06	3.08E-06	9.81E-13	4.20E-14	1.50E-13	0.00E+00	1.85E-08	9.81E-13	7.34E-15	6.83E-14	0.00E+00	
213	32598-13-3	3,3',4,4'-Tetrachlorobiphenyl (TCB)	1.24E-06	3.08E-06	9.81E-13	4.20E-14	1.50E-13	0.00E+00	1.85E-08	9.81E-13	7.34E-15	6.83E-14	0.00E+00	
214	32598-14-4	2,3,3',4,4'-Pentachlorobiphenyl (PCB 105)	1.24E-06	3.08E-06	9.81E-13	4.20E-14	1.50E-13	0.00E+00	1.85E-08	9.81E-13	7.34E-15	6.83E-14	0.00E+00	
215	32774-16-6	3,3',4,4',5,5'-Hexachlorobiphenyl	1.24E-06	3.08E-06	9.81E-13	4.20E-14	1.50E-13	0.00E+00	1.85E-08	9.81E-13	7.34E-15	6.83E-14	0.00E+00	
216	35065-29-3	2,2',3,4,4',5,5'-Heptachlorobiphenyl	1.24E-06	3.08E-06	9.81E-13	4.20E-14	1.50E-13	0.00E+00	1.85E-08	9.81E-13	7.34E-15	6.83E-14	0.00E+00	
217	35065-30-6	2,2',3,3',4,4',5-Heptachlorobiphenyl	1.24E-06	3.08E-06	9.81E-13	4.20E-14	1.50E-13	0.00E+00	1.85E-08	9.81E-13	7.34E-15	6.83E-14	0.00E+00	
218	38380-08-4	2,3,3',4,4',5-Hexachlorobiphenyl (PCB 157)	1.24E-06	3.08E-06	9.81E-13	4.20E-14	1.50E-13	0.00E+00	1.85E-08	9.81E-13	7.34E-15	6.83E-14	0.00E+00	
219	39635-31-9	2,3,3',4,4',5,5'-Heptachlorobiphenyl	1.24E-06	3.08E-06	9.81E-13	4.20E-14	1.50E-13	0.00E+00	1.85E-08	9.81E-13	7.34E-15	6.83E-14	0.00E+00	
220	52663-72-6	2,3',4,4',5,5'-Hexachlorobiphenyl	1.24E-06	3.08E-06	9.81E-13	4.20E-14	1.50E-13	0.00E+00	1.85E-08	9.81E-13	7.34E-15	6.83E-14	0.00E+00	
221	57465-28-8	3,3',4,4',5-Pentachlorobiphenyl	1.24E-06	3.08E-06	9.81E-13	4.20E-14	1.50E-13	0.00E+00	1.85E-08	9.81E-13	7.34E-15	6.83E-14	0.00E+00	
222	65510-44-3	2',3,4,4',5-Pentachlorobiphenyl	1.24E-06	3.08E-06	9.81E-13	4.20E-14	1.50E-13	0.00E+00	1.85E-08	9.81E-13	7.34E-15	6.83E-14	0.00E+00	
223	69782-90-7	2,3,3',4,4',5'-Hexachlorobiphenyl	1.24E-06	3.08E-06	9.81E-13	4.20E-14	1.50E-13	0.00E+00	1.85E-08	9.81E-13	7.34E-15	6.83E-14	0.00E+00	
224	70362-50-4	3,4,4',5-Tetrachlorobiphenyl	1.24E-06	3.08E-06	9.81E-13	4.20E-14	1.50E-13	0.00E+00	1.85E-08	9.81E-13	7.34E-15	6.83E-14	0.00E+00	
225	74472-37-0	2,3,4,4',5-Pentachlorobiphenyl	1.24E-06	3.08E-06	9.81E-13	4.20E-14	1.50E-13	0.00E+00	1.85E-08	9.81E-13	7.34E-15	6.83E-14	0.00E+00	

9 References

Project Documents

CCN 053500, Memorandum, Jim Rouse/Edgardo Berríos to Fred Beranek, "HLW and LAW Vitrification Decontamination Factors for Air Emissions Modeling"

CCN 129507, Memorandum, Lee Bostic to Edgardo Berríos, January 6, 2006, "Update 2: Vapor Phase Partitioning Coefficients"

24590-PTF-MKD-PVP-00002, Rev 5, *Mechanical Data Sheet PTF Vessel Vent Caustic Scrubber*

24590-WTP-M4C-FRP-00006, Rev A, *WTP Air Emissions Hazardous Organic Constituents Feed Concentrations*

24590-WTP-MRQ-P0-05-0049, Rev 0, *2005 Air Emissions Profile*

24590-WTP-RPT-ENV-01-004, Rev 1, *Best Available Radionuclide Control Technology Analysis for the WTP*

24590-WTP-RPT-PO-03-008, Rev 1, *Integrated Emissions Baseline Report for the Hanford Tank Waste Treatment and Immobilization Plant*

10 Attachments

Attachment A - Stream Reports (25 pages)

Attachment B - Calculations (19 pages)

Attachment A - Stream Reports

BY: E. Berrios
DATE: 01/09/06

Table A-1 PJV32 Stream Report

Stream Number: PJV32
Stream Name: HLW pulse ventilation header offgas
Configuration: MRQ-05-0049.acmf
Run Date / Time: 12/14/2005 - 1:42:25 PM
Run Data File: H:\ACM v3.1\MRQ-05-0049\MRQ_05_0049A_Streams.csv

Variable	Value	Units	
Density	1.03E-03	g/cm^3	(does not include solid phase)
Enthalpy	-7.39E+05	BTU/hr	
Mass Flow	2.11E+04	Lb/hr	
	5.06E+05	Lb/day	
Volumetric Flow	4.08E+04	GPM	(does not include solid phase)
	5.45E+03	ft^3/min	(does not include solid phase)
Molar Flow	7.34E+02	Lbmol/hr	
Molecular Weight	2.87E+01	Lb/Lbmol	
Pressure	8.91E+02	mbar	
Temperature	2.52E+01	C	
Na Molarity	0.00E+00	mol/L	
pH	2.24E+00	pH	
Total TRU	5.30E-14	Ci/L	
Total Activity	1.78E-11	Ci/L	

Component	Aqueous Comp			Solid Comp	Gaseous (L)		Total Comp		
Unit	mol/L	Lb/gal	Lb/day	Lb/day	mol/L	Lb/day	Lb/day	mol/day	g/sec
Total	2.94E-09	4.43E-10	2.60E-02	6.92E-05	3.59E-02	5.06E+05	5.06E+05	2.30E+02	2.66E+03
Ag^+	2.78E-23	2.49E-23	1.46E-15	7.67E-08	0.00E+00	0.00E+00	7.67E-08	3.48E-11	4.04E-10
Al^{+3}	3.34E-19	7.52E-20	4.42E-12	4.00E-06	0.00E+00	0.00E+00	4.00E-06	1.82E-09	2.10E-08
As^{+3}	1.22E-22	7.81E-23	4.47E-15	8.05E-09	0.00E+00	0.00E+00	8.05E-09	3.66E-12	4.24E-11
B^{+3}	1.87E-19	1.89E-20	9.91E-13	7.10E-06	0.00E+00	0.00E+00	7.10E-06	3.23E-09	3.73E-08
Ba^{+2}	2.54E-23	2.91E-23	1.71E-15	2.04E-08	0.00E+00	0.00E+00	2.04E-08	9.28E-12	1.07E-10
Bi^{+3}	2.99E-23	5.21E-23	3.06E-15	1.85E-07	0.00E+00	0.00E+00	1.85E-07	8.41E-11	9.73E-10
Ca^{+2}	6.08E-15	2.03E-15	1.19E-07	4.83E-06	0.00E+00	0.00E+00	1.68E-07	7.63E-11	8.83E-10
Cd^{+2}	4.71E-23	4.42E-23	2.59E-15	8.30E-07	0.00E+00	0.00E+00	8.30E-07	3.77E-10	4.37E-09
Ce^{+3}	6.78E-14	7.93E-14	4.66E-06	1.46E-06	0.00E+00	0.00E+00	4.67E-06	2.12E-09	2.46E-08
Cl^-	8.32E-14	2.46E-14	1.45E-06	3.73E-15	0.00E+00	0.00E+00	1.45E-06	6.57E-10	7.60E-09
CO	0.00E+00	0.00E+00	0.00E+00	0.00E+00	0.00E+00	0.00E+00	0.00E+00	0.00E+00	0.00E+00
CO_2	7.01E-18	2.59E-19	1.51E-10	0.00E+00	4.76E-15	1.03E-07	1.03E-07	4.67E-11	5.41E-10
CO_3^{-2}	4.07E-18	2.04E-18	1.20E-08	1.38E-10	0.00E+00	0.00E+00	1.21E-08	5.50E-12	6.37E-11
Cr^{+3}	4.83E-15	2.10E-15	1.23E-07	7.39E-08	0.00E+00	0.00E+00	1.97E-07	8.96E-11	1.04E-08
Cu^{+2}	4.67E-23	2.48E-23	1.45E-15	5.14E-09	0.00E+00	0.00E+00	5.14E-09	2.34E-12	2.70E-11
F^-	9.70E-13	1.54E-13	9.03E-06	6.78E-14	0.00E+00	0.00E+00	9.03E-06	4.11E-09	4.75E-08
Fe^{+3}	1.68E-14	7.84E-15	4.60E-07	3.04E-06	0.00E+00	0.00E+00	3.50E-06	1.59E-09	1.84E-08
H_2O	2.93E-09	4.40E-10	2.58E-02	0.00E+00	3.48E-04	3.07E+03	3.07E+03	1.40E+00	1.62E+01
H_2O(b)	0.00E+00	0.00E+00	0.00E+00	0.00E+00	0.00E+00	0.00E+00	0.00E+00	0.00E+00	0.00E+00
H^+	4.00E-15	3.37E-17	1.98E-09	0.00E+00	0.00E+00	0.00E+00	1.98E-09	8.99E-13	1.04E-11
HCL	0.00E+00	0.00E+00	0.00E+00	0.00E+00	0.00E+00	0.00E+00	0.00E+00	0.00E+00	0.00E+00
HCO3-	2.12E-14	1.08E-14	6.33E-07	7.68E-29	0.00E+00	0.00E+00	6.33E-07	2.88E-10	3.33E-09
H2CO3	0.00E+00	0.00E+00	0.00E+00	0.00E+00	0.00E+00	0.00E+00	0.00E+00	0.00E+00	0.00E+00
HF	0.00E+00	0.00E+00	0.00E+00	0.00E+00	0.00E+00	0.00E+00	0.00E+00	0.00E+00	0.00E+00
Hg^{+2}	0.00E+00	0.00E+00	0.00E+00	3.44E-06	0.00E+00	0.00E+00	3.44E-06	1.56E-09	1.81E-08
HNO_2	0.00E+00	0.00E+00	0.00E+00	0.00E+00	0.00E+00	0.00E+00	0.00E+00	0.00E+00	0.00E+00
K^+	5.33E-14	1.74E-14	1.02E-06	2.45E-23	0.00E+00	0.00E+00	1.02E-06	4.64E-10	5.37E-09
La^{+3}	1.31E-23	1.51E-23	8.89E-16	7.63E-08	0.00E+00	0.00E+00	7.63E-08	3.47E-11	4.01E-10
Li^+	1.29E-13	7.47E-15	4.39E-07	4.49E-07	0.00E+00	0.00E+00	8.88E-07	4.04E-10	4.67E-09
Mg^{+2}	3.85E-22	7.81E-23	4.59E-15	4.91E-08	0.00E+00	0.00E+00	4.91E-08	2.23E-11	2.58E-10
Mn^{+3}	4.17E-22	1.91E-22	1.12E-14	3.98E-07	0.00E+00	0.00E+00	3.98E-07	1.81E-10	2.10E-09
MnO_4^-	0.00E+00	0.00E+00	0.00E+00	0.00E+00	0.00E+00	0.00E+00	0.00E+00	0.00E+00	0.00E+00
N_2	0.00E+00	0.00E+00	0.00E+00	0.00E+00	2.81E-02	3.86E+05	3.86E+05	1.75E+02	2.03E+03
Na^+	5.15E-12	9.87E-13	5.80E-05	7.31E-12	0.00E+00	0.00E+00	5.80E-05	2.64E-08	3.05E-07
NH3	8.07E-18	1.15E-18	6.74E-09	0.00E+00	0.00E+00	0.00E+00	6.74E-09	3.06E-12	3.54E-11
NH4+	1.41E-13	1.15E-18	1.25E-06	0.00E+00	0.00E+00	0.00E+00	1.25E-06	5.68E-10	6.57E-09
Ni^{+2}	2.28E-15	1.12E-15	6.55E-08	1.50E-07	0.00E+00	0.00E+00	2.16E-07	9.82E-11	1.14E-09
NO	0.00E+00	0.00E+00	0.00E+00	0.00E+00	0.00E+00	0.00E+00	0.00E+00	0.00E+00	0.00E+00
NO_3	0.00E+00	0.00E+00	0.00E+00	0.00E+00	0.00E+00	0.00E+00	0.00E+00	0.00E+00	0.00E+00
NO_2^-	7.25E-19	2.78E-19	1.64E-11	2.12E-11	0.00E+00	0.00E+00	3.75E-11	1.71E-14	1.97E-13
NO_3^-	2.93E-12	1.52E-12	8.91E-05	1.63E-11	0.00E+00	0.00E+00	8.91E-05	4.05E-08	4.69E-07
O_2	0.00E+00	0.00E+00	0.00E+00	0.00E+00	7.47E-03	1.17E+05	1.17E+05	5.33E+01	6.17E+02
O^{--}	0.00E+00	0.00E+00	0.00E+00	2.77E-05	0.00E+00	0.00E+00	2.77E-05	1.26E-08	1.46E-07
OH^-	1.75E-12	2.49E-13	1.46E-05	3.97E-10	0.00E+00	0.00E+00	1.46E-05	6.64E-09	7.68E-08
OH(b)	7.40E-19	1.05E-19	6.17E-12	3.78E-34	0.00E+00	0.00E+00	6.17E-12	2.80E-15	3.24E-14
Pb^{+2}	1.71E-22	2.95E-22	1.73E-14	2.20E-07	0.00E+00	0.00E+00	2.20E-07	1.00E-10	1.16E-09
Pd^{+2}	1.33E-23	1.18E-23	6.95E-16	3.59E-09	0.00E+00	0.00E+00	3.59E-09	1.63E-12	1.89E-11
PO_4^{-3}	1.37E-20	1.08E-20	6.36E-13	2.04E-08	0.00E+00	0.00E+00	2.04E-08	9.28E-10	1.07E-08
Resin	0.00E+00	0.00E+00	0.00E+00	0.00E+00	0.00E+00	0.00E+00	0.00E+00	0.00E+00	0.00E+00
Rh^{+3}	1.29E-23	1.11E-23	6.50E-16	6.35E-09	0.00E+00	0.00E+00	6.35E-09	2.89E-12	3.34E-11
Ru^{+3}	1.90E-23	1.60E-23	9.39E-16	5.47E-07	0.00E+00	0.00E+00	5.47E-07	2.49E-10	2.88E-09
S^{+6}	0.00E+00	0.00E+00	0.00E+00	1.08E-29	0.00E+00	0.00E+00	1.08E-29	4.89E-33	5.66E-32
SiO2	2.58E-21	1.29E-21	7.60E-14	1.72E-05	0.00E+00	0.00E+00	1.72E-05	7.83E-09	9.06E-08
SeO_4^{-4}	1.97E-33	1.52E-33	8.90E-26	1.32E-12	0.00E+00	0.00E+00	1.32E-12	5.98E-16	6.92E-15
SO_3	0.00E+00	0.00E+00	0.00E+00	0.00E+00	0.00E+00	0.00E+00	0.00E+00	0.00E+00	0.00E+00
SO_4^{-2}	3.28E-20	2.61E-20	1.53E-12	1.93E-13	0.00E+00	0.00E+00	1.73E-12	7.85E-16	9.09E-15
Sr^{+2}	1.68E-16	1.23E-16	7.20E-09	4.17E-09	0.00E+00	0.00E+00	1.14E-08	5.17E-12	5.98E-11
Sucrose	0.00E+00	0.00E+00	0.00E+00	0.00E+00	0.00E+00	0.00E+00	0.00E+00	0.00E+00	0.00E+00
Tl^{+4}	2.15E-23	8.58E-24	5.04E-16	1.04E-09	0.00E+00	0.00E+00	1.04E-09	4.73E-13	5.47E-12
Zn^{+2}	7.98E-23	4.34E-23	2.55E-15	9.66E-07	0.00E+00	0.00E+00	9.66E-07	4.39E-10	5.08E-09
Zr^{+4}	5.87E-23	4.47E-23	2.63E-15	4.83E-07	0.00E+00	0.00E+00	4.83E-07	2.20E-10	2.54E-09

Components	Aqueous Comp			Solid Comp	Gaseous		Total Comp		
Unit	mol/L	Lb/gal	Lb/day	Lb/day	mol/L	Lb/day	Lb/day	MM/day	g/sec
Total	1.72E-20	1.26E-20	7.42E-13	3.01E-04	0.00E+00	0.00E+00	3.01E-04	1.37E-07	1.59E-06

CALCULATION SHEET

BY: E. Barrios
DATE: 01/09/06

PROJECT: WTP
JOB NO.: 24590
CALC NO.: 24590-WTP-M4C-FRP-00005
SHEET REV: C
SHEET NO.: A-3

$C_2O_4^{-2}$	1.72E-20	1.26E-20	7.42E-13	3.01E-04	0.00E+00	0.00E+00	3.01E-04	1.37E-07	1.59E-06
Formate	0.00E+00	0.00E+00	0.00E+00	0.00E+00	0.00E+00	0.00E+00	0.00E+00	0.00E+00	0.00E+00
Acetate	0.00E+00	0.00E+00	0.00E+00	1.89E-26	0.00E+00	0.00E+00	1.89E-26	8.58E-30	9.94E-29
Glycolate	0.00E+00	0.00E+00	0.00E+00	0.00E+00	0.00E+00	0.00E+00	0.00E+00	0.00E+00	0.00E+00
IDA	0.00E+00	0.00E+00	0.00E+00	0.00E+00	0.00E+00	0.00E+00	0.00E+00	0.00E+00	0.00E+00
Citrate	0.00E+00	0.00E+00	0.00E+00	5.15E-27	0.00E+00	0.00E+00	5.15E-27	2.34E-30	2.71E-29
HEDTA	0.00E+00	0.00E+00	0.00E+00	6.87E-27	0.00E+00	0.00E+00	6.87E-27	3.12E-30	3.61E-29
EDTA	0.00E+00	0.00E+00	0.00E+00	0.00E+00	0.00E+00	0.00E+00	0.00E+00	0.00E+00	0.00E+00

Rad. Comp	Aqueous Rad. Comp			Solids Rad. Comp (1)			Total Rad. Comp (1)		
Unit	Ci/L	Ci/day	Lb/day	Ci/L	Ci/day	Lb/day	Ci/L	Ci/day	Lb/day
Total	1.69E-12	3.76E-04	6.00E-09	1.59E-11	3.53E-03	1.33E-05	1.76E-11	3.90E-03	1.33E-05
^{241}Am	2.59E-22	5.75E-14	3.70E-17	4.20E-14	9.34E-06	6.01E-09	4.20E-14	9.34E-06	6.01E-09
^{243}Am	1.69E-25	3.76E-17	4.15E-19	3.41E-18	7.58E-10	8.37E-12	3.41E-18	7.58E-10	8.37E-12
^{14}C	0.00E+00	0.00E+00	0.00E+00	0.00E+00	0.00E+00	0.00E+00	0.00E+00	0.00E+00	0.00E+00
^{60}Co	3.49E-23	7.76E-15	1.51E-20	3.75E-15	8.35E-07	1.63E-12	3.75E-15	8.35E-07	1.63E-12
^{243}Cm	2.80E-26	6.23E-18	2.72E-22	4.73E-17	1.05E-08	4.59E-13	4.73E-17	1.05E-08	4.59E-13
^{244}Cm	6.63E-25	1.48E-16	4.02E-21	1.07E-15	2.39E-07	6.51E-12	1.07E-15	2.39E-07	6.51E-12
^{137}Cs	7.61E-17	1.69E-08	4.30E-13	1.45E-11	3.23E-03	8.19E-08	1.45E-11	3.23E-03	8.19E-08
^{152}Eu	1.95E-24	4.33E-16	5.49E-21	1.80E-16	4.00E-08	5.08E-13	1.80E-16	4.00E-08	5.08E-13
^{154}Eu	4.03E-22	8.97E-14	7.32E-19	1.95E-14	4.34E-06	3.54E-11	1.95E-14	4.34E-06	3.54E-11
^{155}Eu	1.17E-22	2.59E-14	1.18E-19	2.89E-15	6.44E-07	2.92E-12	2.89E-15	6.44E-07	2.92E-12
^{3}H	2.11E-23	4.68E-15	1.07E-21	2.44E-15	5.43E-07	1.25E-13	2.44E-15	5.43E-07	1.25E-13
^{129}I	0.00E+00	0.00E+00	0.00E+00	7.71E-19	1.72E-10	2.14E-09	7.71E-19	1.72E-10	2.14E-09
^{94}Nb	8.25E-22	1.39E-13	5.39E-18	5.60E-16	1.25E-07	4.83E-12	5.60E-16	1.25E-07	4.83E-12
^{93m}Nb	2.08E-25	4.57E-17	1.43E-16	2.77E-17	6.16E-09	1.93E-08	2.77E-17	6.16E-09	1.93E-08
^{238}Pu	1.16E-24	2.57E-16	3.31E-20	1.31E-16	2.92E-08	3.76E-12	1.31E-16	2.92E-08	3.76E-12
^{239}Pu	1.60E-23	3.56E-15	1.26E-16	1.16E-15	2.59E-07	9.20E-09	1.16E-15	2.59E-07	9.20E-09
^{240}Pu	4.15E-24	9.23E-16	8.98E-18	3.07E-16	6.83E-08	6.64E-10	3.07E-16	6.83E-08	6.64E-10
^{241}Pu	8.71E-23	1.94E-14	4.15E-19	8.25E-15	1.83E-06	3.93E-11	8.25E-15	1.83E-06	3.93E-11
^{242}Pu	4.39E-28	9.77E-20	5.47E-20	2.06E-21	4.59E-13	2.57E-13	2.06E-21	4.59E-13	2.57E-13
^{125}Sb	2.41E-22	5.36E-14	1.14E-19	8.65E-15	1.92E-06	4.09E-12	8.65E-15	1.92E-06	4.09E-12
^{151}Sm	3.41E-21	7.59E-13	8.35E-17	8.03E-14	1.79E-05	1.50E-08	8.03E-14	1.79E-05	1.50E-08
^{126}Sn	3.83E-24	8.52E-16	1.65E-16	3.38E-17	7.51E-09	1.46E-09	3.38E-17	7.51E-09	1.46E-09
^{90}Sr	1.69E-12	3.76E-04	6.00E-09	9.78E-13	2.18E-04	3.47E-09	2.67E-12	5.94E-04	9.47E-09
^{99}Tc	8.68E-22	1.49E-13	1.93E-14	2.02E-13	4.49E-05	5.84E-08	2.02E-13	4.49E-05	5.84E-08
^{229}Th	6.30E-27	1.40E-18	2.81E-14	9.09E-19	2.02E-10	4.05E-08	9.09E-19	2.02E-10	4.05E-08
^{233}U	2.08E-25	4.63E-17	1.06E-17	7.50E-17	1.67E-08	3.82E-09	7.50E-17	1.67E-08	3.82E-09
^{234}U	1.48E-25	3.29E-17	1.17E-17	3.91E-18	8.69E-10	3.08E-10	3.91E-18	8.69E-10	3.08E-10
^{235}U	5.82E-27	1.30E-18	1.32E-15	8.79E-20	1.96E-11	2.00E-08	8.79E-20	1.96E-11	2.00E-08
^{236}U	9.98E-27	2.22E-18	7.56E-17	1.21E-19	2.69E-11	9.16E-10	1.21E-19	2.69E-11	9.16E-10
^{238}U	1.15E-25	2.57E-17	1.66E-13	2.20E-18	4.89E-10	3.21E-06	2.20E-18	4.89E-10	3.21E-06

(1) All radionuclides in gaseous streams are assumed to exist as solid particulate.

CAS Comp	Organic Components				
Unit	mol/L	Lb/gal	Lb/day	lbM/day	g/sec
Total	7.22E-15	1.30E-14	7.62E-07	3.46E-10	4.01E-09
50-32-8	1.54E-15	3.25E-15	1.91E-07	8.68E-11	1.00E-09
56-23-5	1.64E-62	2.11E-62	1.24E-54	5.63E-58	6.52E-57
57-14-7	1.27E-44	6.38E-45	3.75E-37	1.70E-40	1.97E-39
58-90-2	2.58E-31	4.98E-31	2.91E-23	1.32E-26	1.53E-25
59-89-2	0.00E+00	0.00E+00	0.00E+00	0.00E+00	0.00E+00
60-35-5	0.00E+00	0.00E+00	0.00E+00	0.00E+00	0.00E+00
62-75-9	0.00E+00	0.00E+00	0.00E+00	0.00E+00	0.00E+00
64-19-7	0.00E+00	0.00E+00	0.00E+00	0.00E+00	0.00E+00
71-43-2	3.15E-56	2.05E-56	1.20E-48	5.48E-52	6.34E-51
75-05-8	1.48E-45	5.06E-46	2.96E-38	1.35E-41	1.57E-40
75-12-7	1.67E-29	6.26E-30	3.66E-22	1.66E-25	1.94E-24
76-15-3	0.00E+00	0.00E+00	0.00E+00	0.00E+00	0.00E+00
79-01-6	2.21E-58	2.42E-58	1.42E-50	6.46E-54	7.47E-53
83-32-9	0.00E+00	0.00E+00	0.00E+00	0.00E+00	0.00E+00
84-66-2	7.44E-30	1.38E-29	8.10E-22	3.68E-25	4.26E-24
84-74-2	6.17E-16	1.43E-15	8.43E-08	3.83E-11	4.43E-10
87-68-3	7.94E-60	1.73E-59	1.01E-51	4.61E-55	5.34E-54
88-89-1	0.00E+00	0.00E+00	0.00E+00	0.00E+00	0.00E+00
91-20-3	6.46E-50	6.81E-50	4.00E-42	1.84E-45	2.14E-44
95-50-1	0.00E+00	0.00E+00	0.00E+00	0.00E+00	0.00E+00
98-86-2	9.09E-31	9.14E-31	5.37E-23	2.44E-26	2.82E-25
100-21-0	3.34E-15	4.83E-15	2.72E-07	1.24E-10	1.43E-09
101-84-8	0.00E+00	0.00E+00	0.00E+00	0.00E+00	0.00E+00
106-93-4	2.72E-49	4.27E-49	2.51E-41	1.14E-44	1.32E-43
108-97-8	0.00E+00	0.00E+00	0.00E+00	0.00E+00	0.00E+00
108-99-6	0.00E+00	0.00E+00	0.00E+00	0.00E+00	0.00E+00
108-87-2	0.00E+00	0.00E+00	0.00E+00	0.00E+00	0.00E+00
108-88-3	2.89E-56	2.07E-56	1.21E-48	5.52E-52	6.39E-51
108-95-2	1.91E-29	1.50E-29	8.83E-22	4.01E-25	4.65E-24
110-54-3	0.00E+00	0.00E+00	0.00E+00	0.00E+00	0.00E+00
110-82-7	0.00E+00	0.00E+00	0.00E+00	0.00E+00	0.00E+00
111-84-2	0.00E+00	0.00E+00	0.00E+00	0.00E+00	0.00E+00
120-12-7	1.62E-18	2.41E-18	1.42E-10	6.44E-14	7.45E-13
120-82-1	5.74E-52	8.89E-52	5.11E-44	2.32E-47	2.69E-46
122-39-4	1.29E-18	1.83E-18	1.07E-08	4.88E-12	5.65E-11
126-73-8	1.41E-15	3.13E-15	1.84E-07	8.35E-11	9.66E-10
127-18-4	2.92E-61	4.05E-61	2.38E-53	1.08E-56	1.25E-55
129-00-0	4.69E-17	7.92E-17	4.65E-09	2.11E-12	2.45E-11
132-64-9	2.02E-47	2.83E-47	1.66E-39	7.57E-43	8.76E-42
144-62-7	3.13E-32	2.35E-32	1.38E-24	6.28E-28	7.27E-27
193-39-5	8.36E-21	1.93E-20	1.13E-12	5.15E-16	5.96E-15
205-44-0	0.00E+00	0.00E+00	0.00E+00	0.00E+00	0.00E+00
208-96-8	8.02E-34	1.02E-33	5.98E-26	2.72E-29	3.15E-28
603-34-9	1.29E-18	2.64E-18	1.55E-08	7.04E-12	8.15E-11
621-64-7	0.00E+00	0.00E+00	0.00E+00	0.00E+00	0.00E+00
1321-64-8	0.00E+00	0.00E+00	0.00E+00	0.00E+00	0.00E+00
1336-36-3	1.45E-21	3.91E-21	2.29E-13	1.04E-16	1.21E-15
3697-24-3	0.00E+00	0.00E+00	0.00E+00	0.00E+00	0.00E+00
4170-30-3	0.00E+00	0.00E+00	0.00E+00	0.00E+00	0.00E+00
10061-01-5	1.82E-53	1.69E-53	9.91E-46	4.50E-49	5.21E-48
26140-60-3	0.00E+00	0.00E+00	0.00E+00	0.00E+00	0.00E+00

Table A-2 FRP01 Stream Report

Stream Number: FRP01
Stream Name: Waste feed from DOE to LAW Feed Receipt
Configuration: MRQ-05-0049.acmf
Run Date / Time: 12/14/2005 - 1:42:25 PM
Run Data File: H:\ACM v3.1\MRQ-05-0049\MRQ_05_0049A_Streams.csv

Variable	Value	Units	
Density	1.26E+00	g/cm³	(does not include solid phase)
Enthalpy	-1.54E+07	BTU/hr	
Mass Flow	2.60E+03	Lb/hr	
	6.23E+04	Lb/day	
Volumetric Flow	4.12E+00	GPM	(does not include solid phase)
	5.50E-01	ft³/min	(does not include solid phase)
Molar Flow	1.28E+02	Lbmol/hr	
Molecular Weight	1.99E+01	Lb/Lbmol	
Pressure	1.00E+03	mbar	
Temperature	2.50E+01	C	
Na Molarity	4.00E+00	mol/L	
pH	1.44E+01	pH	
Total TRU	4.24E-04	Ci/L	
Total Activity	2.26E+00	Ci/L	

Component	Aqueous Comp			Solid Comp	Gaseous (1)		Total Comp		
Unit	mol/L	Lb/gal	Lb/day	Lb/day	mol/L	Lb/day	Lb/day	mt/day	g/sec
Total	6.19E+01	1.03E+01	6.09E+04	0.00E+00	0.00E+00	0.00E+00	6.09E+04	2.77E+01	3.20E+02
Ag^{+}	3.17E-05	2.85E-05	1.69E-01	0.00E+00	0.00E+00	0.00E+00	1.69E-01	7.69E-05	8.89E-04
Al^{+3}	3.84E-01	8.64E-02	5.12E+02	0.00E+00	0.00E+00	0.00E+00	5.12E+02	2.33E-01	2.70E+00
As^{+3}	1.40E-04	8.73E-05	5.18E-01	0.00E+00	0.00E+00	0.00E+00	5.18E-01	2.35E-04	2.72E-03
B^{+3}	2.32E-03	2.09E-04	1.24E+00	0.00E+00	0.00E+00	0.00E+00	1.24E+00	5.64E-04	6.52E-03
Ba^{+2}	2.91E-05	3.34E-05	1.98E-01	0.00E+00	0.00E+00	0.00E+00	1.98E-01	8.99E-05	1.04E-03
Bi^{+3}	3.43E-05	5.99E-05	3.55E-01	0.00E+00	0.00E+00	0.00E+00	3.55E-01	1.61E-04	1.87E-03
Ca^{+2}	1.98E-03	6.81E-04	3.92E+00	0.00E+00	0.00E+00	0.00E+00	3.92E+00	1.78E-03	2.06E-02
Cd^{+2}	5.41E-05	5.07E-05	3.01E-01	0.00E+00	0.00E+00	0.00E+00	3.01E-01	1.37E-04	1.58E-03
Ce^{+3}	6.69E-05	7.83E-05	4.64E-01	0.00E+00	0.00E+00	0.00E+00	4.64E-01	2.11E-04	2.44E-03
Cl^{-}	6.17E-02	1.82E-02	1.08E+02	0.00E+00	0.00E+00	0.00E+00	1.08E+02	4.92E-02	5.69E-01
CO	0.00E+00	0.00E+00	0.00E+00	0.00E+00	0.00E+00	0.00E+00	0.00E+00	0.00E+00	0.00E+00
CO_2	0.00E+00	0.00E+00	0.00E+00	0.00E+00	0.00E+00	0.00E+00	0.00E+00	0.00E+00	0.00E+00
CO_3^{-2}	3.07E-01	1.54E-01	9.10E+02	0.00E+00	0.00E+00	0.00E+00	9.10E+02	4.14E-01	4.79E+00
Cr^{+3}	8.19E-03	3.99E-03	2.36E+01	0.00E+00	0.00E+00	0.00E+00	2.36E+01	1.07E-02	1.24E-01
Cu^{+2}	5.35E-05	2.84E-05	1.68E-01	0.00E+00	0.00E+00	0.00E+00	1.68E-01	7.85E-05	8.85E-04
F^{-}	2.47E-02	3.91E-03	2.32E+01	0.00E+00	0.00E+00	0.00E+00	2.32E+01	1.05E-02	1.22E-01
Fe^{+3}	1.39E-03	6.48E-04	3.84E+00	0.00E+00	0.00E+00	0.00E+00	3.84E+00	1.75E-03	2.02E-02
H_2O	5.24E+01	7.86E+00	4.66E+04	0.00E+00	0.00E+00	0.00E+00	4.66E+04	2.13E+01	2.46E+02
$H_2O(b)$	0.00E+00	0.00E+00	0.00E+00	0.00E+00	0.00E+00	0.00E+00	0.00E+00	0.00E+00	0.00E+00
H^{+}	0.00E+00	0.00E+00	0.00E+00	0.00E+00	0.00E+00	0.00E+00	0.00E+00	0.00E+00	0.00E+00
HCL	0.00E+00	0.00E+00	0.00E+00	0.00E+00	0.00E+00	0.00E+00	0.00E+00	0.00E+00	0.00E+00
HCO3-	0.00E+00	0.00E+00	0.00E+00	0.00E+00	0.00E+00	0.00E+00	0.00E+00	0.00E+00	0.00E+00
H2CO3	0.00E+00	0.00E+00	0.00E+00	0.00E+00	0.00E+00	0.00E+00	0.00E+00	0.00E+00	0.00E+00
HF	0.00E+00	0.00E+00	0.00E+00	0.00E+00	0.00E+00	0.00E+00	0.00E+00	0.00E+00	0.00E+00
Hg^{+2}	5.60E-05	9.38E-05	5.56E-01	0.00E+00	0.00E+00	0.00E+00	5.56E-01	2.53E-04	2.93E-03
HNO_3	0.00E+00	0.00E+00	0.00E+00	0.00E+00	0.00E+00	0.00E+00	0.00E+00	0.00E+00	0.00E+00
K^{+}	1.31E-01	4.28E-02	2.54E+02	0.00E+00	0.00E+00	0.00E+00	2.54E+02	1.15E-01	1.34E+00
La^{+3}	1.46E-05	1.72E-05	1.02E-01	0.00E+00	0.00E+00	0.00E+00	1.02E-01	4.64E-05	5.37E-04
Li^{+}	4.20E-04	2.43E-05	1.44E-01	0.00E+00	0.00E+00	0.00E+00	1.44E-01	6.55E-05	7.59E-04
Mg^{+2}	4.42E-04	8.98E-05	5.31E-01	0.00E+00	0.00E+00	0.00E+00	5.31E-01	2.41E-04	2.79E-03
Mn^{+3}	4.79E-04	2.20E-04	1.30E+00	0.00E+00	0.00E+00	0.00E+00	1.30E+00	5.92E-04	6.85E-03
MnO_4^{-}	0.00E+00	0.00E+00	0.00E+00	0.00E+00	0.00E+00	0.00E+00	0.00E+00	0.00E+00	0.00E+00
N_2	0.00E+00	0.00E+00	0.00E+00	0.00E+00	0.00E+00	0.00E+00	0.00E+00	0.00E+00	0.00E+00
Na^{+}	4.00E+00	7.67E-01	4.55E+03	0.00E+00	0.00E+00	0.00E+00	4.55E+03	2.07E+00	2.39E+01
NHG	2.62E-03	4.01E-04	2.36E+00	0.00E+00	0.00E+00	0.00E+00	2.36E+00	1.08E-03	1.25E-02
NH4+	0.00E+00	4.01E-04	0.00E+00	0.00E+00	0.00E+00	0.00E+00	0.00E+00	0.00E+00	0.00E+00
Ni^{+2}	7.32E-04	3.59E-04	2.13E+00	0.00E+00	0.00E+00	0.00E+00	2.13E+00	9.68E-04	1.12E-02
NO	0.00E+00	0.00E+00	0.00E+00	0.00E+00	0.00E+00	0.00E+00	0.00E+00	0.00E+00	0.00E+00
NO_2	0.00E+00	0.00E+00	0.00E+00	0.00E+00	0.00E+00	0.00E+00	0.00E+00	0.00E+00	0.00E+00
NO_2^{-}	8.34E-01	3.20E-01	1.90E+03	0.00E+00	0.00E+00	0.00E+00	1.90E+03	8.63E-01	9.99E+00
NO_3^{-}	1.13E+00	5.83E-01	3.46E+03	0.00E+00	0.00E+00	0.00E+00	3.46E+03	1.57E+00	1.82E+01
O_2	0.00E+00	0.00E+00	0.00E+00	0.00E+00	0.00E+00	0.00E+00	0.00E+00	0.00E+00	0.00E+00
O^{-}	0.00E+00	0.00E+00	0.00E+00	0.00E+00	0.00E+00	0.00E+00	0.00E+00	0.00E+00	0.00E+00
OH^{-}	2.53E+00	3.59E-01	2.13E+03	0.00E+00	0.00E+00	0.00E+00	2.13E+03	9.68E-01	1.12E+01
OH(b)	0.00E+00	0.00E+00	0.00E+00	0.00E+00	0.00E+00	0.00E+00	0.00E+00	0.00E+00	0.00E+00
Pb^{+2}	1.98E-04	3.39E-04	2.01E+00	0.00E+00	0.00E+00	0.00E+00	2.01E+00	9.15E-04	1.06E-02
Pd^{+2}	1.52E-05	1.35E-05	8.00E-02	0.00E+00	0.00E+00	0.00E+00	8.00E-02	3.64E-05	4.21E-04
PO_4^{-3}	1.57E-02	1.24E-02	7.37E+01	0.00E+00	0.00E+00	0.00E+00	7.37E+01	3.35E-02	3.88E-01
Resin	0.00E+00	0.00E+00	0.00E+00	0.00E+00	0.00E+00	0.00E+00	0.00E+00	0.00E+00	0.00E+00
Rh^{+3}	1.47E-05	1.26E-05	7.48E-02	0.00E+00	0.00E+00	0.00E+00	7.48E-02	3.40E-05	3.94E-04
Ru^{+3}	2.18E-05	1.84E-05	1.09E-01	0.00E+00	0.00E+00	0.00E+00	1.09E-01	4.96E-05	5.74E-04
S^{+6}	0.00E+00	0.00E+00	0.00E+00	0.00E+00	0.00E+00	0.00E+00	0.00E+00	0.00E+00	0.00E+00
SiO2	2.96E-03	1.48E-03	8.80E+00	0.00E+00	0.00E+00	0.00E+00	8.80E+00	4.00E-03	4.63E-02
SiO_4^{-4}	0.00E+00	0.00E+00	0.00E+00	0.00E+00	0.00E+00	0.00E+00	0.00E+00	0.00E+00	0.00E+00
SO_3	0.00E+00	0.00E+00	0.00E+00	0.00E+00	0.00E+00	0.00E+00	0.00E+00	0.00E+00	0.00E+00
SO_4^{-2}	3.74E-02	3.00E-02	1.78E+02	0.00E+00	0.00E+00	0.00E+00	1.78E+02	8.09E-02	9.36E-01
Sr^{+2}	8.95E-06	5.08E-06	3.01E-02	0.00E+00	0.00E+00	0.00E+00	3.01E-02	1.37E-05	1.59E-04
Sucrose	0.00E+00	0.00E+00	0.00E+00	0.00E+00	0.00E+00	0.00E+00	0.00E+00	0.00E+00	0.00E+00
Tl^{+4}	2.44E-05	9.75E-06	5.78E-02	0.00E+00	0.00E+00	0.00E+00	5.78E-02	2.63E-05	3.04E-04
Zn^{+2}	9.13E-05	4.98E-05	2.95E-01	0.00E+00	0.00E+00	0.00E+00	2.95E-01	1.34E-04	1.55E-03
Zr^{+4}	6.74E-05	5.13E-05	3.04E-01	0.00E+00	0.00E+00	0.00E+00	3.04E-01	1.38E-04	1.60E-03

Components	Aqueous Comp			Solid Comp	Gaseous		Total Comp		
Unit	mol/L	Lb/gal	Lb/day	Lb/day	mol/L	Lb/day	Lb/day	Mt/day	g/sec
Total	1.58E-02	1.16E-02	6.88E+01	0.00E+00	0.00E+00	0.00E+00	6.88E+01	3.13E-02	3.62E-01

CALCULATION SHEET

BY: E. Berrios
DATE: 01/09/06

PROJECT: WTP
JOB NO.: 24590
CALC NO.: 24590-WTP-M4C-FRP-00005
SHEET REV C
SHEET NO: A-5

$C_2O_4^{-2}$	1.58E-02	1.16E-02	6.88E+01	0.00E+00	0.00E+00	0.00E+00	6.88E+01	3.13E-02	3.62E-01
Formate	0.00E+00	0.00E+00	0.00E+00	0.00E+00	0.00E+00	0.00E+00	0.00E+00	0.00E+00	0.00E+00
Acetate	0.00E+00	0.00E+00	0.00E+00	0.00E+00	0.00E+00	0.00E+00	0.00E+00	0.00E+00	0.00E+00
Glycolate	0.00E+00	0.00E+00	0.00E+00	0.00E+00	0.00E+00	0.00E+00	0.00E+00	0.00E+00	0.00E+00
IDA	0.00E+00	0.00E+00	0.00E+00	0.00E+00	0.00E+00	0.00E+00	0.00E+00	0.00E+00	0.00E+00
Citrate	0.00E+00	0.00E+00	0.00E+00	0.00E+00	0.00E+00	0.00E+00	0.00E+00	0.00E+00	0.00E+00
HEDTA	0.00E+00	0.00E+00	0.00E+00	0.00E+00	0.00E+00	0.00E+00	0.00E+00	0.00E+00	0.00E+00
EDTA	0.00E+00	0.00E+00	0.00E+00	0.00E+00	0.00E+00	0.00E+00	0.00E+00	0.00E+00	0.00E+00

Rad. Comp	Aqueous Rad. Comp			Solids Rad. Comp (1)			Total Rad. Comp (1)		
Unit	Ci/L	Ci/day	Lb/day	Ci/L	Ci/day	Lb/day	Ci/L	Ci/day	Lb/day
Total	2.26E+00	5.08E+04	2.65E+01	0.00E+00	0.00E+00	0.00E+00	2.26E+00	5.08E+04	2.65E+01
^{241}Am	2.98E-04	6.69E+00	4.30E-03	0.00E+00	0.00E+00	0.00E+00	2.98E-04	6.69E+00	4.30E-03
^{243}Am	1.95E-07	4.37E-03	4.83E-05	0.00E+00	0.00E+00	0.00E+00	1.95E-07	4.37E-03	4.83E-05
^{14}C	6.09E-06	1.37E-01	6.75E-05	0.00E+00	0.00E+00	0.00E+00	6.09E-06	1.37E-01	6.75E-05
^{60}Co	4.00E-05	8.97E-01	1.75E-06	0.00E+00	0.00E+00	0.00E+00	4.00E-05	8.97E-01	1.75E-06
^{243}Cm	3.22E-08	7.22E-04	3.15E-08	0.00E+00	0.00E+00	0.00E+00	3.22E-08	7.22E-04	3.15E-08
^{244}Cm	7.61E-07	1.71E-02	4.65E-07	0.00E+00	0.00E+00	0.00E+00	7.61E-07	1.71E-02	4.65E-07
^{137}Cs	2.17E+00	4.87E+04	1.24E+00	0.00E+00	0.00E+00	0.00E+00	2.17E+00	4.87E+04	1.24E+00
^{152}Eu	2.24E-06	5.03E-02	8.38E-07	0.00E+00	0.00E+00	0.00E+00	2.24E-06	5.03E-02	8.38E-07
^{154}Eu	4.65E-04	1.04E+01	8.51E-05	0.00E+00	0.00E+00	0.00E+00	4.65E-04	1.04E+01	8.51E-05
^{155}Eu	1.34E-04	3.02E+00	1.37E-05	0.00E+00	0.00E+00	0.00E+00	1.34E-04	3.02E+00	1.37E-05
^{3}H	5.19E-05	1.17E+00	2.87E-07	0.00E+00	0.00E+00	0.00E+00	5.19E-05	1.17E+00	2.87E-07
^{129}I	1.86E-07	4.17E-03	5.21E-02	0.00E+00	0.00E+00	0.00E+00	1.86E-07	4.17E-03	5.21E-02
^{63}Ni	7.20E-04	1.62E+01	6.27E-04	0.00E+00	0.00E+00	0.00E+00	7.20E-04	1.62E+01	6.27E-04
^{237}Np	2.36E-07	5.30E-03	1.66E-02	0.00E+00	0.00E+00	0.00E+00	2.36E-07	5.30E-03	1.66E-02
^{238}Pu	1.33E-06	2.99E-02	3.85E-06	0.00E+00	0.00E+00	0.00E+00	1.33E-06	2.99E-02	3.85E-06
^{239}Pu	1.84E-05	4.14E-01	1.47E-02	0.00E+00	0.00E+00	0.00E+00	1.84E-05	4.14E-01	1.47E-02
^{240}Pu	4.78E-06	1.07E-01	1.04E-03	0.00E+00	0.00E+00	0.00E+00	4.78E-06	1.07E-01	1.04E-03
^{241}Pu	1.00E-04	2.25E+00	4.82E-05	0.00E+00	0.00E+00	0.00E+00	1.00E-04	2.25E+00	4.82E-05
^{242}Pu	5.06E-10	1.14E-05	6.36E-06	0.00E+00	0.00E+00	0.00E+00	5.06E-10	1.14E-05	6.36E-06
^{125}Sb	2.77E-04	6.22E+00	1.32E-05	0.00E+00	0.00E+00	0.00E+00	2.77E-04	6.22E+00	1.32E-05
^{151}Sm	3.89E-03	8.74E+01	7.32E-03	0.00E+00	0.00E+00	0.00E+00	3.89E-03	8.74E+01	7.32E-03
^{126}Sn	4.41E-06	9.90E-02	1.92E-02	0.00E+00	0.00E+00	0.00E+00	4.41E-06	9.90E-02	1.92E-02
^{90}Sr	8.64E-02	1.94E+03	3.10E-02	0.00E+00	0.00E+00	0.00E+00	8.64E-02	1.94E+03	3.10E-02
^{99}Tc	7.67E-04	1.72E+01	2.24E+00	0.00E+00	0.00E+00	0.00E+00	7.67E-04	1.72E+01	2.24E+00
^{232}Th	7.17E-09	1.61E-04	3.22E+00	0.00E+00	0.00E+00	0.00E+00	7.17E-09	1.61E-04	3.22E+00
^{233}U	2.39E-07	5.36E-03	1.23E-03	0.00E+00	0.00E+00	0.00E+00	2.39E-07	5.36E-03	1.23E-03
^{234}U	1.70E-07	3.81E-03	1.35E-03	0.00E+00	0.00E+00	0.00E+00	1.70E-07	3.81E-03	1.35E-03
^{235}U	6.68E-09	1.50E-04	1.53E-01	0.00E+00	0.00E+00	0.00E+00	6.68E-09	1.50E-04	1.53E-01
^{236}U	1.14E-08	2.57E-04	8.78E-03	0.00E+00	0.00E+00	0.00E+00	1.14E-08	2.57E-04	8.78E-03
^{238}U	1.32E-07	2.97E-03	1.95E+01	0.00E+00	0.00E+00	0.00E+00	1.32E-07	2.97E-03	1.95E+01

(1) All radionuclides in gaseous streams are assumed to exist as solid particulate.

CAS Comp	Organic Components				
Unit	mol/L	Lb/gal	Lb/day	Mb/day	g/sec
Total	4.06E-01	2.19E-01	1.30E+03	5.82E-01	8.86E+00
50-32-8	1.51E-04	3.18E-04	1.69E+00	8.57E-04	9.92E-03
56-23-5	2.80E-05	3.34E-05	1.98E-01	9.00E-05	1.04E-03
57-14-7	9.98E-04	5.01E-04	2.97E+00	1.35E-03	1.56E-02
58-90-2	2.58E-04	5.01E-04	2.97E+00	1.35E-03	1.56E-02
59-89-2	5.17E-04	5.01E-04	2.97E+00	1.35E-03	1.56E-02
60-35-5	1.69E-04	8.33E-05	4.94E-01	2.25E-04	2.60E-03
62-75-9	8.10E-04	5.01E-04	2.97E+00	1.35E-03	1.56E-02
64-19-7	3.81E-01	1.81E-01	1.07E+03	4.88E-01	5.84E+00
71-43-2	5.12E-05	3.34E-05	1.98E-01	9.00E-05	1.04E-03
75-05-8	2.44E-04	8.36E-05	4.96E-01	2.25E-04	2.61E-03
75-12-7	1.33E-03	5.00E-04	2.96E+00	1.35E-03	1.56E-02
76-13-3	6.47E-05	8.34E-05	4.95E-01	2.25E-04	2.60E-03
79-01-6	7.61E-05	8.35E-05	4.95E-01	2.25E-04	2.60E-03
83-32-9	3.89E-04	5.01E-04	2.97E+00	1.35E-03	1.56E-02
84-66-2	2.70E-04	5.01E-04	2.97E+00	1.35E-03	1.56E-02
84-74-2	2.16E-04	5.02E-04	2.98E+00	1.35E-03	1.57E-02
87-68-3	3.83E-05	8.33E-05	4.94E-01	2.25E-04	2.60E-03
88-89-1	2.82E-04	5.01E-04	2.97E+00	1.35E-03	1.56E-02
91-20-3	1.56E-05	1.67E-05	9.89E-02	4.50E-05	5.20E-04
95-50-1	2.72E-05	3.34E-05	1.98E-01	8.99E-05	1.04E-03
96-86-2	3.32E-04	3.34E-04	1.98E+00	9.00E-04	1.04E-02
100-21-0	3.61E-04	5.00E-04	2.97E+00	1.35E-03	1.56E-02
101-84-8	5.88E-05	8.35E-05	4.95E-01	2.25E-04	2.61E-03
106-93-4	2.13E-05	3.34E-05	1.98E-01	9.00E-05	1.04E-03
106-97-8	1.72E-04	8.34E-05	4.95E-01	2.25E-04	2.60E-03
106-99-0	7.39E-05	3.34E-05	1.98E-01	8.99E-05	1.04E-03
108-67-2	1.02E-04	8.36E-05	4.96E-01	2.25E-04	2.61E-03
108-88-3	4.34E-05	3.34E-05	1.98E-01	8.99E-05	1.04E-03
108-95-2	6.38E-04	5.01E-04	2.97E+00	1.35E-03	1.56E-02
110-54-3	1.16E-04	8.34E-05	4.95E-01	2.25E-04	2.60E-03
110-82-7	1.19E-04	8.36E-05	4.96E-01	2.25E-04	2.61E-03
111-84-2	7.80E-05	8.35E-05	4.95E-01	2.25E-04	2.60E-03
120-12-7	3.37E-04	5.01E-04	2.97E+00	1.35E-03	1.56E-02
120-82-1	5.51E-05	8.34E-05	4.95E-01	2.25E-04	2.60E-03
122-39-4	1.18E-04	1.67E-04	9.88E-01	4.49E-04	5.20E-03
126-73-8	1.50E-04	3.33E-04	1.98E+00	8.99E-04	1.04E-02
127-18-4	2.41E-05	3.34E-05	1.98E-01	8.99E-05	1.04E-03
129-00-0	2.97E-04	5.01E-04	2.97E+00	1.35E-03	1.56E-02
132-64-9	3.57E-04	5.01E-04	2.97E+00	1.35E-03	1.56E-02
144-62-7	3.33E-02	2.50E-02	1.48E+02	6.74E-02	7.81E-01
193-39-5	2.17E-04	5.00E-04	2.97E+00	1.35E-03	1.56E-02
208-44-0	2.87E-04	5.01E-04	2.97E+00	1.35E-03	1.56E-02
205-99-2	3.94E-04	5.00E-04	2.97E+00	1.35E-03	1.56E-02
603-34-9	2.45E-04	5.02E-04	2.97E+00	1.35E-03	1.56E-02
621-64-7	4.61E-04	5.01E-04	2.97E+00	1.35E-03	1.56E-02
1321-64-8	2.00E-04	5.01E-04	2.97E+00	1.35E-03	1.56E-02
1336-36-3	2.01E-06	5.40E-06	3.20E-02	1.46E-05	1.68E-04
3697-24-3	2.48E-04	5.02E-04	2.97E+00	1.35E-03	1.56E-02
4170-30-3	1.43E-04	8.36E-05	4.96E-01	2.26E-04	2.61E-03
10061-01-5	3.60E-05	3.33E-05	1.98E-01	8.99E-05	1.04E-03
26140-60-3	2.61E-04	5.02E-04	2.97E+00	1.35E-03	1.56E-02

Table A-3 FRP14 Stream Report

Stream Number:	FRP14
Stream Name:	Waste feed from DOE to HLW Feed Receipt
Configuration:	MRQ-05-0049 ecmf
Run Date / Time:	12/14/2005 - 1:42:25 PM
Run Date File:	H:\ACM v9.1\MRQ-05-0049\MRQ_05_0049A_Streams.csv

Variable	Value	Units	
Density	1.25E+00	g/cm^3	(does not include solid phase)
Enthalpy	-2.60E+07	BTU/hr	
Mass Flow	4.78E+03	Lb/hr	
	1.14E+05	Lb/day	
Volumetric Flow	7.21E+00	GPM	(does not include solid phase)
	9.63E-01	ft^3/min	(does not include solid phase)
Molar Flow	2.22E+02	Lbmol/hr	
Molecular Weight	1.99E+01	Lb/Lbmol	
Pressure	1.00E+03	mbar	
Temperature	4.90E+01	C	
Na Molarity	4.00E+00	mol/L	
pH	1.44E+01	pH	
Total TRU	2.90E-02	Ci/L	
Total Activity	5.16E+00	Ci/L	

Component	Aqueous Comp			Solid Comp	Gaseous (1)		Total Comp		
Unit	mol/L	Lb/gal	Lb/day	Lb/day	mol/L	Lb/day	Lb/day	mt/day	g/sec
Total	6.14E+01	1.02E+01	1.06E+05	5.05E+03	0.00E+00	0.00E+00	1.11E+05	5.04E+01	5.83E+02
Ag^+	3.17E-05	2.85E-05	2.96E-01	3.50E+00	0.00E+00	0.00E+00	3.80E+00	1.73E-03	2.00E-02
Al^{+3}	3.64E-01	8.64E-02	8.97E+02	4.93E+02	0.00E+00	0.00E+00	1.39E+03	6.32E-01	7.31E+00
As^{+5}	1.40E-04	8.73E-05	9.06E-01	2.20E-01	0.00E+00	0.00E+00	1.13E+00	5.12E-04	5.92E-03
B^{+3}	2.32E-03	2.09E-04	2.17E+00	3.00E+00	0.00E+00	0.00E+00	5.17E+00	2.35E-03	2.72E-02
Ba^{+2}	2.91E-05	3.34E-05	3.46E-01	3.20E+00	0.00E+00	0.00E+00	3.55E+00	1.61E-03	1.87E-02
Bi^{+3}	3.43E-05	5.99E-05	6.21E-01	1.67E+01	0.00E+00	0.00E+00	1.73E+01	7.85E-03	9.09E-02
Ca^{+2}	1.68E-03	6.61E-04	6.86E+00	1.92E+01	0.00E+00	0.00E+00	2.60E+01	1.18E-02	1.37E-01
Cd^{+2}	5.41E-05	5.07E-05	5.27E-01	1.17E+01	0.00E+00	0.00E+00	1.23E+01	5.58E-03	6.45E-02
Ce^{+3}	6.69E-05	7.83E-05	8.12E-01	4.01E+00	0.00E+00	0.00E+00	4.82E+00	2.19E-03	2.53E-02
Cl	6.17E-02	1.82E-02	1.89E+02	3.93E+00	0.00E+00	0.00E+00	1.93E+02	8.79E-02	1.02E+00
CO	0.00E+00	0.00E+00	0.00E+00	0.00E+00	0.00E+00	0.00E+00	0.00E+00	0.00E+00	0.00E+00
CO_2	0.00E+00	0.00E+00	0.00E+00	0.00E+00	0.00E+00	0.00E+00	0.00E+00	0.00E+00	0.00E+00
CO_3^{-2}	3.07E-01	1.54E-01	1.59E+03	4.40E+02	0.00E+00	0.00E+00	2.03E+03	9.24E-01	1.07E+01
Cr^{+3}	9.19E-03	3.99E-03	4.14E+01	9.96E+00	0.00E+00	0.00E+00	5.13E+01	2.33E-02	2.70E-01
Cu^{+2}	5.35E-05	2.84E-05	2.95E-01	1.36E+00	0.00E+00	0.00E+00	1.66E+00	7.53E-04	8.72E-03
F^-	2.47E-02	3.91E-03	4.06E+01	7.13E+01	0.00E+00	0.00E+00	1.12E+02	5.08E-02	5.88E-01
Fe^{+3}	1.39E-03	6.48E-04	6.72E+00	5.09E+02	0.00E+00	0.00E+00	5.15E+02	2.34E-01	2.71E+00
H_2O	5.20E+01	7.81E+00	8.11E+04	0.00E+00	0.00E+00	0.00E+00	8.11E+04	3.68E+01	4.26E+02
$H_2O(b)$	0.00E+00	0.00E+00	0.00E+00	0.00E+00	0.00E+00	0.00E+00	0.00E+00	0.00E+00	0.00E+00
H^+	0.00E+00	0.00E+00	0.00E+00	0.00E+00	0.00E+00	0.00E+00	0.00E+00	0.00E+00	0.00E+00
HCL	0.00E+00	0.00E+00	0.00E+00	0.00E+00	0.00E+00	0.00E+00	0.00E+00	0.00E+00	0.00E+00
HCO3-	0.00E+00	0.00E+00	0.00E+00	0.00E+00	0.00E+00	0.00E+00	0.00E+00	0.00E+00	0.00E+00
H2CO3	0.00E+00	0.00E+00	0.00E+00	0.00E+00	0.00E+00	0.00E+00	0.00E+00	0.00E+00	0.00E+00
HF	0.00E+00	0.00E+00	0.00E+00	0.00E+00	0.00E+00	0.00E+00	0.00E+00	0.00E+00	0.00E+00
Hg^{+2}	5.80E-05	9.38E-05	9.74E-01	1.99E+00	0.00E+00	0.00E+00	2.97E+00	1.35E-03	1.56E-02
HNO_3	0.00E+00	0.00E+00	0.00E+00	0.00E+00	0.00E+00	0.00E+00	0.00E+00	0.00E+00	0.00E+00
K^+	1.31E-01	4.28E-02	4.44E+02	1.01E+01	0.00E+00	0.00E+00	4.54E+02	2.07E-01	2.39E+00
La^{+3}	1.48E-05	1.72E-05	1.79E-01	5.94E+00	0.00E+00	0.00E+00	6.12E+00	2.78E-03	3.22E-02
Li^+	4.20E-04	2.43E-05	2.52E-01	4.18E-01	0.00E+00	0.00E+00	6.71E-01	3.05E-04	3.53E-03
Mg^{+2}	4.42E-04	8.96E-05	9.29E-01	3.83E+00	0.00E+00	0.00E+00	4.86E+00	2.21E-03	2.56E-02
Mn^{+3}	4.79E-04	2.20E-04	2.28E+00	4.67E+01	0.00E+00	0.00E+00	4.90E+01	2.23E-02	2.58E-01
MnO_4	0.00E+00	0.00E+00	0.00E+00	0.00E+00	0.00E+00	0.00E+00	0.00E+00	0.00E+00	0.00E+00
N_2	0.00E+00	0.00E+00	0.00E+00	0.00E+00	0.00E+00	0.00E+00	0.00E+00	0.00E+00	0.00E+00
Na^+	4.00E+00	7.67E-01	7.96E+03	7.82E+02	0.00E+00	0.00E+00	8.76E+03	3.98E+00	4.61E+01
NH3	2.82E-03	4.01E-04	4.16E+00	0.00E+00	0.00E+00	0.00E+00	4.16E+00	1.89E-03	2.19E-02
NH4+	0.00E+00	4.01E-04	0.00E+00	0.00E+00	0.00E+00	0.00E+00	0.00E+00	0.00E+00	0.00E+00
Ni^{+2}	7.32E-04	3.59E-04	3.72E+00	2.09E+01	0.00E+00	0.00E+00	2.46E+01	1.12E-02	1.29E-01
NO	0.00E+00	0.00E+00	0.00E+00	0.00E+00	0.00E+00	0.00E+00	0.00E+00	0.00E+00	0.00E+00
NO_2	0.00E+00	0.00E+00	0.00E+00	0.00E+00	0.00E+00	0.00E+00	0.00E+00	0.00E+00	0.00E+00
NO_2^-	8.34E-01	3.20E-01	3.32E+03	1.99E+02	0.00E+00	0.00E+00	3.52E+03	1.60E+00	1.85E+01
NO_3	1.13E+00	5.83E-01	6.05E+03	1.53E+02	0.00E+00	0.00E+00	6.21E+03	2.82E+00	3.27E+01
O_2	0.00E+00	0.00E+00	0.00E+00	0.00E+00	0.00E+00	0.00E+00	0.00E+00	0.00E+00	0.00E+00
O^-	0.00E+00	0.00E+00	0.00E+00	0.00E+00	0.00E+00	0.00E+00	0.00E+00	0.00E+00	0.00E+00
OH	2.53E+00	3.59E-01	3.73E+03	1.82E+03	0.00E+00	0.00E+00	5.54E+03	2.52E+00	2.92E+01
OH(b)	0.00E+00	0.00E+00	0.00E+00	0.00E+00	0.00E+00	0.00E+00	0.00E+00	0.00E+00	0.00E+00
Pb^{+2}	1.98E-04	3.39E-04	3.52E+00	2.74E+01	0.00E+00	0.00E+00	3.09E+01	1.40E-02	1.62E-01
Pd^{+3}	1.52E-05	1.35E-05	1.40E-01	1.13E+00	0.00E+00	0.00E+00	1.27E+00	5.78E-04	6.69E-03
PO_4^{-3}	1.57E-02	1.24E-02	1.29E+02	1.21E+02	0.00E+00	0.00E+00	2.50E+02	1.14E-01	1.32E+00
Resin	0.00E+00	0.00E+00	0.00E+00	0.00E+00	0.00E+00	0.00E+00	0.00E+00	0.00E+00	0.00E+00
Rh^{+3}	1.47E-05	1.26E-05	1.31E-01	3.58E-01	0.00E+00	0.00E+00	4.88E-01	2.22E-04	2.57E-03
Ru^{+3}	2.16E-05	1.84E-05	1.91E-01	2.50E+00	0.00E+00	0.00E+00	2.70E+00	1.23E-03	1.42E-02
S^{-6}	0.00E+00	0.00E+00	0.00E+00	0.00E+00	0.00E+00	0.00E+00	0.00E+00	0.00E+00	0.00E+00
SiO2	2.96E-03	1.48E-03	1.54E+01	8.20E+01	0.00E+00	0.00E+00	9.75E+01	4.43E-02	5.13E-01
SiO_4^{-4}	0.00E+00	0.00E+00	0.00E+00	0.00E+00	0.00E+00	0.00E+00	0.00E+00	0.00E+00	0.00E+00
SiO_3	0.00E+00	0.00E+00	0.00E+00	0.00E+00	0.00E+00	0.00E+00	0.00E+00	0.00E+00	0.00E+00
SO_4^{-2}	3.74E-02	3.00E-02	3.11E+02	4.50E+01	0.00E+00	0.00E+00	3.56E+02	1.62E-01	1.88E+00
Sr^{+2}	6.95E-06	5.08E-06	5.28E-02	1.80E+00	0.00E+00	0.00E+00	1.85E+00	8.41E-04	9.74E-03
Sucrose	0.00E+00	0.00E+00	0.00E+00	0.00E+00	0.00E+00	0.00E+00	0.00E+00	0.00E+00	0.00E+00
Tl^{+1}	2.44E-05	9.75E-06	1.01E-01	7.23E-01	0.00E+00	0.00E+00	8.24E-01	3.74E-04	4.33E-03
Zn^{+2}	9.13E-05	4.98E-05	5.17E-01	1.81E+00	0.00E+00	0.00E+00	2.33E+00	1.06E-03	1.23E-02
Zr^{+4}	6.74E-05	5.13E-05	5.32E-01	1.24E+02	0.00E+00	0.00E+00	1.25E+02	5.66E-02	6.55E-01

Components	Aqueous Comp			Solid Comp	Gaseous		Total Comp		
Unit	mol/L	Lb/gal	Lb/day	Lb/day	mol/L	Lb/day	Lb/day	Mt/day	g/sec
Total	1.58E-02	1.16E-02	1.20E+02	5.95E+01	0.00E+00	0.00E+00	1.80E+02	8.16E-02	9.47E-01

CALCULATION SHEET

BY E. Berrios
DATE: 01/09/06

PROJECT: WTP
JOB NO.: 24590
CALC NO.: 24590-WTP-M4C-FRP-00005
SHEET REV: C
SHEET NO.: A-7

$C_2O_4^{2-}$	1.58E-02	1.16E-02	1.20E+02	5.95E+01	0.00E+00	0.00E+00	1.60E+02	8.18E-02	9.47E-01
Formate	0.00E+00	0.00E+00	0.00E+00	0.00E+00	0.00E+00	0.00E+00	0.00E+00	0.00E+00	0.00E+00
Acetate	0.00E+00	0.00E+00	0.00E+00	0.00E+00	0.00E+00	0.00E+00	0.00E+00	0.00E+00	0.00E+00
Glycolate	0.00E+00	0.00E+00	0.00E+00	0.00E+00	0.00E+00	0.00E+00	0.00E+00	0.00E+00	0.00E+00
IDA	0.00E+00	0.00E+00	0.00E+00	0.00E+00	0.00E+00	0.00E+00	0.00E+00	0.00E+00	0.00E+00
Citrate	0.00E+00	0.00E+00	0.00E+00	0.00E+00	0.00E+00	0.00E+00	0.00E+00	0.00E+00	0.00E+00
HEDTA	0.00E+00	0.00E+00	0.00E+00	0.00E+00	0.00E+00	0.00E+00	0.00E+00	0.00E+00	0.00E+00
EDTA	0.00E+00	0.00E+00	0.00E+00	0.00E+00	0.00E+00	0.00E+00	0.00E+00	0.00E+00	0.00E+00

Rad. Comp	Aqueous Rad. Comp			Solids Rad. Comp (1)			Total Rad. Comp (1)		
Unit	Ci/L	Ci/day	Lb/day	Ci/L	Ci/day	Lb/day	Ci/L	Ci/day	Lb/day
Total	2.26E+00	8.88E+04	4.64E+01	2.90E+00	1.14E+05	8.52E+02	5.16E+00	2.03E+05	8.98E+02
^{241}Am	2.98E-04	1.17E+01	7.53E-03	2.15E-02	8.46E+02	5.44E-01	2.18E-02	8.58E+02	5.52E-01
^{243}Am	1.95E-07	7.65E-03	8.45E-05	1.74E-06	6.84E-02	7.55E-04	1.94E-06	7.60E-02	8.40E-04
^{14}C	6.09E-06	2.39E-01	1.18E-04	1.55E-08	6.08E-02	3.00E-05	7.64E-06	3.00E-01	1.48E-04
^{60}Co	4.00E-05	1.57E+00	3.08E-06	2.39E-03	9.39E+01	1.83E-04	2.43E-03	9.54E+01	1.86E-04
^{243}Cm	3.22E-08	1.26E-03	5.51E-08	3.02E-05	1.19E+00	5.18E-05	3.03E-05	1.19E+00	5.19E-05
^{244}Cm	7.61E-07	2.99E-02	8.14E-07	6.87E-04	2.70E+01	7.36E-04	6.88E-04	2.70E+01	7.36E-04
^{137}Cs	2.17E+00	8.52E+04	2.18E+00	3.58E-01	1.41E+04	3.58E-01	2.53E+00	9.92E+04	2.52E+00
^{152}Eu	2.24E-06	8.81E-02	1.12E-06	1.15E-04	4.51E+00	5.73E-05	1.17E-04	4.60E+00	5.84E-05
^{154}Eu	4.65E-04	1.83E+01	1.49E-04	1.24E-02	4.88E+02	3.99E-03	1.29E-02	5.07E+02	4.14E-03
^{155}Eu	1.34E-04	5.26E+00	2.40E-05	1.84E-03	7.24E+01	3.29E-04	1.98E-03	7.77E+01	3.53E-04
^{3}H	5.19E-05	2.04E+00	4.68E-07	1.55E-05	6.08E-01	1.40E-07	6.74E-05	2.65E+00	6.08E-07
^{129}I	1.86E-07	7.30E-03	9.11E-02	8.95E-08	2.73E-03	3.41E-02	2.55E-07	1.00E-02	1.25E-01
^{63}Ni	7.20E-04	2.83E+01	1.10E-03	4.14E-04	1.63E+01	6.32E-04	1.13E-03	4.46E+01	1.73E-03
^{237}Np	2.36E-07	9.27E-03	2.90E-02	1.77E-05	6.95E-01	2.18E+00	1.79E-05	7.05E-01	2.20E+00
^{238}Pu	1.33E-06	5.24E-02	6.74E-08	8.39E-05	3.30E+00	4.24E-04	8.53E-05	3.35E+00	4.31E-04
^{239}Pu	1.84E-05	7.24E-01	2.57E-02	7.43E-04	2.92E+01	1.04E+00	7.62E-04	2.99E+01	1.06E+00
^{240}Pu	4.78E-06	1.88E-01	1.82E-03	1.96E-04	7.71E+00	7.48E-02	2.01E-04	7.89E+00	7.67E-02
^{241}Pu	1.00E-04	3.94E+00	8.43E-05	5.27E-03	2.07E+02	4.43E-03	5.37E-03	2.11E+02	4.51E-03
^{242}Pu	5.08E-10	1.99E-05	1.11E-05	1.83E-08	7.18E-04	4.02E-04	1.88E-08	7.38E-04	4.13E-04
^{125}Sb	2.77E-04	1.09E+01	2.31E-05	7.67E-05	3.01E+02	6.40E-04	7.95E-03	3.12E+02	6.63E-04
^{151}Sm	3.99E-03	1.53E+02	1.28E-02	8.31E-02	3.66E+03	3.05E-01	9.70E-02	3.81E+03	3.19E-01
^{126}Sn	4.41E-06	1.73E-01	3.36E-02	3.60E-05	1.41E+00	2.74E-01	4.04E-05	1.59E+00	3.08E-01
^{90}Sr	8.64E-02	3.40E+03	5.42E-02	2.39E+00	9.39E+04	1.50E+00	2.48E+00	9.73E+04	1.55E+00
^{99}Tc	7.67E-04	3.01E+01	3.82E+00	3.60E-03	1.41E+02	1.84E+01	4.37E-03	1.71E+02	2.23E+01
^{232}Th	7.17E-09	2.82E-04	5.64E+00	5.98E-07	2.30E-02	4.61E+02	5.93E-07	2.33E-02	4.66E+02
^{233}U	2.38E-07	9.39E-03	2.15E-03	4.79E-05	1.88E+00	4.31E-01	4.82E-05	1.89E+00	4.33E-01
^{234}U	1.70E-07	6.68E-03	2.37E-03	2.49E-06	9.79E-02	3.48E-02	2.66E-06	1.05E-01	3.71E-02
^{235}U	6.68E-09	2.62E-04	2.88E-01	5.99E-08	2.35E-03	2.40E+00	6.66E-08	2.61E-03	2.67E+00
^{236}U	1.14E-08	4.50E-04	1.53E-02	8.23E-08	3.23E-03	1.10E-01	9.37E-08	3.68E-03	1.26E-01
^{238}U	1.32E-07	5.20E-03	3.41E+01	1.41E-06	5.54E-02	3.63E+02	1.54E-06	6.06E-02	3.98E+02

(1) All radionuclides in gaseous streams are assumed to exist as solid particulate.

CAS Comp	Organic Components				
Unit	mol/L	Lb/gal	Lb/day	Mt/day	g/sec
Total	4.06E-01	2.20E-01	2.28E+03	1.04E+00	1.20E+01
50-32-8	1.51E-04	3.18E-04	3.30E+00	1.50E-03	1.74E-02
56-23-5	2.60E-05	3.34E-05	3.46E-01	1.57E-04	1.82E-03
57-14-7	9.98E-04	5.01E-04	5.19E+00	2.36E-03	2.73E-02
58-90-2	2.59E-04	5.01E-04	5.20E+00	2.36E-03	2.74E-02
59-89-2	5.17E-04	5.01E-04	5.20E+00	2.36E-03	2.74E-02
60-35-5	1.69E-04	8.33E-05	8.65E-01	3.93E-04	4.55E-03
62-75-9	8.10E-04	5.01E-04	5.20E+00	2.36E-03	2.73E-02
64-19-7	3.61E-01	1.81E-01	1.88E+03	8.53E-01	9.88E+00
71-43-2	5.12E-05	3.34E-05	3.46E-01	1.57E-04	1.82E-03
75-05-8	2.44E-04	8.36E-05	8.67E-01	3.94E-04	4.56E-03
75-12-7	1.33E-03	5.00E-04	5.19E+00	2.36E-03	2.73E-02
78-15-3	6.47E-05	8.34E-05	8.66E-01	3.93E-04	4.55E-03
79-01-6	7.61E-05	8.35E-05	8.66E-01	3.94E-04	4.56E-03
83-32-9	3.89E-04	5.01E-04	5.20E+00	2.36E-03	2.73E-02
84-66-2	2.70E-04	5.01E-04	5.20E+00	2.36E-03	2.73E-02
84-74-2	2.18E-04	5.02E-04	5.21E+00	2.37E-03	2.74E-02
87-68-3	3.83E-05	8.33E-05	8.65E-01	3.93E-04	4.55E-03
88-89-1	2.62E-04	5.01E-04	5.20E+00	2.36E-03	2.74E-02
91-20-3	1.56E-05	1.67E-05	1.73E-01	7.87E-05	9.11E-04
95-50-1	2.72E-05	3.34E-05	3.46E-01	1.57E-04	1.82E-03
98-86-2	3.32E-04	3.34E-04	3.46E+00	1.57E-03	1.82E-02
100-21-0	3.61E-04	5.00E-04	5.19E+00	2.36E-03	2.73E-02
101-84-8	5.88E-05	8.35E-05	8.67E-01	3.94E-04	4.56E-03
106-93-4	2.13E-05	3.34E-05	3.47E-01	1.58E-04	1.82E-03
106-97-8	1.72E-04	8.34E-05	8.66E-01	3.94E-04	4.56E-03
108-90-0	7.39E-05	3.34E-05	3.46E-01	1.57E-04	1.82E-03
108-87-2	1.02E-04	8.36E-05	8.67E-01	3.94E-04	4.56E-03
108-88-3	4.34E-05	3.34E-05	3.46E-01	1.57E-04	1.82E-03
108-95-2	5.38E-04	5.01E-04	5.20E+00	2.36E-03	2.74E-02
110-54-3	1.16E-04	8.34E-05	8.66E-01	3.94E-04	4.55E-03
110-82-7	1.19E-04	8.36E-05	8.67E-01	3.94E-04	4.56E-03
111-84-2	7.90E-05	8.35E-05	8.66E-01	3.94E-04	4.56E-03
120-12-7	3.37E-04	5.01E-04	5.20E+00	2.36E-03	2.74E-02
120-82-1	5.51E-05	8.34E-05	8.66E-01	3.94E-04	4.56E-03
122-39-4	1.18E-04	1.67E-04	1.73E+00	7.86E-04	9.10E-03
126-73-8	1.50E-04	3.33E-04	3.46E+00	1.57E-03	1.82E-02
127-18-4	2.41E-05	3.34E-05	3.46E-01	1.57E-04	1.82E-03
129-00-0	2.97E-04	5.01E-04	5.20E+00	2.36E-03	2.74E-02
132-64-9	3.57E-04	5.01E-04	5.20E+00	2.36E-03	2.74E-02
144-62-7	3.33E-02	2.50E-02	2.60E+02	1.18E-01	1.37E+00
193-39-5	2.17E-04	5.00E-04	5.19E+00	2.36E-03	2.73E-02
208-44-0	2.97E-04	5.01E-04	5.20E+00	2.36E-03	2.74E-02
208-96-8	3.94E-04	5.00E-04	5.19E+00	2.36E-03	2.73E-02
603-34-9	2.45E-04	5.02E-04	5.21E+00	2.37E-03	2.74E-02
621-64-7	4.61E-04	5.01E-04	5.20E+00	2.36E-03	2.73E-02
1321-64-8	2.00E-04	5.01E-04	5.20E+00	2.37E-03	2.74E-02
1336-36-3	1.07E-05	2.87E-05	2.98E-01	1.35E-04	1.57E-03
3697-24-3	2.48E-04	5.02E-04	5.20E+00	2.37E-03	2.74E-02
4170-30-3	1.43E-04	8.36E-05	8.68E-01	3.95E-04	4.57E-03
10061-01-5	3.60E-05	3.33E-05	3.46E-01	1.57E-04	1.82E-03
26140-60-3	2.61E-04	5.02E-04	5.21E+00	2.37E-03	2.74E-02

Table A-4 PVP01 Stream Report

Stream Number: PVP01
Stream Name: Pretreatment vessel vents feed to caustic scrubber
Configuration: MRQ-05-0049.acmf
Run Date / Time: 12/14/2005 - 1:42:23 PM
Run Date File: H:\ACM v3.1\MRQ-05-0049\MRQ_05_0049A_Streams.csv

Variable	Value	Units	
Density	1.10E-03	g/cm^3	(does not include solid phase)
Enthalpy	-4.75E+06	BTU/hr	
Mass Flow	3.28E+04	Lb/hr	
	7.87E+05	Lb/day	
Volumetric Flow	5.95E+04	GPM	(does not include solid phase)
	7.96E+03	ft^3/min	(does not include solid phase)
Molar Flow	1.15E+03	Lbmol/hr	
Molecular Weight	2.84E+01	Lb/Lbmol	
Pressure	9.68E+02	mbar	
Temperature	2.89E+01	C	
Na Molarity	0.00E+00	mol/L	
pH	5.55E+00	pH	
Total TRU	3.27E-12	Ci/L	
Total Activity	2.10E-09	Ci/L	

Component	Aqueous Comp			Solid Comp	Gaseous (1)		Total Comp		
Unit	mol/L	Lb/gal	Lb/day	Lb/day	mol/L	Lb/day	Lb/day	mol/day	g/sec
Total	1.89E-07	2.65E-08	2.27E+00	2.59E-02	3.86E-02	7.84E+05	7.84E+05	3.58E+02	4.13E+03
Ag^+	5.18E-14	4.86E-14	3.99E-08	1.84E-05	0.00E+00	0.00E+00	2.04E-05	9.25E-09	1.07E-07
Al^{+3}	4.93E-10	1.11E-10	9.52E-03	1.90E-03	0.00E+00	0.00E+00	1.14E-02	5.19E-06	6.01E-05
As^{+3}	2.09E-13	1.30E-13	1.12E-05	1.92E-06	0.00E+00	0.00E+00	1.31E-05	5.98E-09	6.89E-08
B^{+3}	3.68E-12	3.32E-13	2.85E-05	4.82E-04	0.00E+00	0.00E+00	5.10E-04	2.32E-07	2.68E-06
Ba^{+2}	4.91E-14	5.63E-14	4.83E-06	1.51E-05	0.00E+00	0.00E+00	1.99E-05	9.04E-09	1.05E-07
Bi^{+3}	3.00E-14	5.23E-14	4.49E-06	4.24E-05	0.00E+00	0.00E+00	4.68E-05	2.13E-08	2.46E-07
Ca^{+2}	7.54E-11	2.52E-11	2.16E-03	3.10E-03	0.00E+00	0.00E+00	5.26E-03	2.39E-06	2.77E-05
Cd^{+2}	4.56E-14	4.56E-14	3.91E-06	3.34E-05	0.00E+00	0.00E+00	3.73E-05	1.69E-08	1.96E-07
Ce^{+3}	1.89E-12	2.21E-12	1.89E-04	1.71E-05	0.00E+00	0.00E+00	2.07E-04	9.39E-08	1.09E-06
Cr^+	6.53E-11	1.83E-11	1.66E-03	1.06E-05	0.00E+00	0.00E+00	1.67E-03	7.57E-07	8.77E-06
CO	4.90E-35	1.15E-35	9.82E-28	0.00E+00	1.36E-71	2.73E-64	9.82E-28	4.46E-31	5.17E-30
CO_2	6.00E-15	2.94E-15	2.52E-07	0.00E+00	1.45E-12	4.56E-05	4.59E-05	2.08E-08	2.41E-07
CO_3^{-2}	4.60E-10	2.30E-10	1.97E-02	1.62E-03	0.00E+00	0.00E+00	2.16E-02	9.80E-06	1.13E-04
Cr^{+3}	8.09E-12	3.51E-12	3.01E-04	2.85E-05	0.00E+00	0.00E+00	3.29E-04	1.50E-07	1.73E-06
Cu^{+2}	8.75E-14	4.64E-14	3.98E-06	6.19E-06	0.00E+00	0.00E+00	1.02E-05	4.62E-09	5.35E-08
F	2.82E-11	4.47E-12	3.83E-04	1.79E-04	0.00E+00	0.00E+00	5.62E-04	2.56E-07	2.96E-06
Fe^{+3}	2.83E-12	1.32E-12	1.13E-04	2.47E-03	0.00E+00	0.00E+00	2.58E-03	1.17E-06	1.36E-05
H_2O	1.58E-07	2.38E-08	2.04E+00	0.00E+00	1.55E-03	2.00E+04	2.00E+04	9.08E+00	1.05E+02
$H_2O(b)$	0.00E+00	0.00E+00	0.00E+00	0.00E+00	0.00E+00	0.00E+00	0.00E+00	0.00E+00	0.00E+00
H^+	7.69E-11	6.47E-13	5.55E-05	0.00E+00	0.00E+00	0.00E+00	5.55E-05	2.52E-08	2.92E-07
HCL	0.00E+00	0.00E+00	0.00E+00	0.00E+00	8.61E-35	2.25E-27	2.25E-27	1.02E-30	1.18E-29
HCO3-	4.08E-16	2.08E-16	1.78E-08	0.00E+00	0.00E+00	0.00E+00	1.78E-08	8.10E-12	9.38E-11
H2CO3	8.00E-28	4.14E-28	3.55E-20	0.00E+00	0.00E+00	0.00E+00	3.55E-20	1.61E-23	1.87E-22
HF	0.00E+00	0.00E+00	0.00E+00	0.00E+00	1.13E-35	1.62E-28	1.62E-28	7.35E-32	8.51E-31
Hg^{+2}	8.38E-14	1.40E-13	1.20E-05	4.34E-05	0.00E+00	0.00E+00	5.55E-05	2.52E-08	2.92E-07
HNO_2	0.00E+00	0.00E+00	0.00E+00	0.00E+00	1.05E-33	4.72E-26	4.72E-26	2.15E-29	2.48E-28
K^+	1.41E-10	4.60E-11	3.95E-03	2.99E-05	0.00E+00	0.00E+00	3.99E-03	1.81E-06	2.09E-05
La^{+3}	2.22E-14	2.57E-14	2.21E-06	2.51E-05	0.00E+00	0.00E+00	2.73E-05	1.24E-08	1.44E-07
Li^+	2.95E-12	1.71E-13	1.47E-05	1.12E-05	0.00E+00	0.00E+00	2.59E-05	1.18E-08	1.36E-07
Mg^{+2}	6.64E-12	1.35E-12	1.16E-04	3.70E-04	0.00E+00	0.00E+00	4.86E-04	2.21E-07	2.56E-06
Mn^{+2}	7.36E-13	3.37E-13	2.89E-05	2.02E-04	0.00E+00	0.00E+00	2.31E-04	1.05E-07	1.21E-06
MnO_4	0.00E+00	0.00E+00	0.00E+00	0.00E+00	0.00E+00	0.00E+00	0.00E+00	0.00E+00	0.00E+00
N_2	3.18E-12	7.42E-13	6.37E-05	9.00E+00	2.82E-02	5.86E+05	5.86E+05	2.66E+02	3.08E+03
Na^+	3.77E-09	7.23E-10	6.20E-02	2.02E-03	0.00E+00	0.00E+00	6.40E-02	2.91E-05	3.37E-04
NH3	5.47E-12	7.78E-13	6.67E-05	0.00E+00	1.26E-10	1.53E-03	1.60E-03	7.28E-07	8.42E-06
NH4+	3.02E-15	7.78E-13	3.90E-08	0.00E+00	0.00E+00	0.00E+00	3.90E-08	1.77E-11	2.05E-10
Ni^{+2}	6.86E-13	3.37E-13	2.89E-05	5.41E-05	0.00E+00	0.00E+00	8.30E-05	3.77E-08	4.37E-07
NO	3.98E-34	9.97E-35	8.54E-27	0.00E+00	0.00E+00	0.00E+00	8.54E-27	3.88E-30	4.50E-29
NO_2	0.00E+00	0.00E+00	0.00E+00	0.00E+00	8.65E-50	2.85E-42	2.85E-42	1.29E-45	1.50E-44
NO_3	7.39E-10	2.84E-10	2.43E-02	5.04E-04	0.00E+00	0.00E+00	2.48E-02	1.13E-05	1.31E-04
NO_3	1.49E-09	7.73E-10	6.63E-02	4.10E-04	0.00E+00	0.00E+00	6.67E-02	3.03E-05	3.51E-04
O_2	1.02E-12	2.73E-13	2.34E-05	0.00E+00	7.77E-03	1.78E+05	1.78E+05	8.09E+01	9.38E+02
O^-	0.00E+00	0.00E+00	0.00E+00	1.33E-03	0.00E+00	0.00E+00	1.33E-03	6.02E-07	6.97E-06
OH	3.52E-09	5.00E-10	4.29E-02	7.51E-03	0.00E+00	0.00E+00	5.04E-02	2.29E-05	2.65E-04
OH(b)	5.30E-17	7.52E-18	6.45E-10	1.98E-19	0.00E+00	0.00E+00	6.45E-10	2.93E-13	3.39E-12
Pb^{+2}	1.72E-13	2.97E-13	2.54E-05	6.94E-05	0.00E+00	0.00E+00	9.48E-05	4.31E-08	4.99E-07
Pd^{+2}	1.35E-14	1.20E-14	1.03E-06	2.90E-06	0.00E+00	0.00E+00	3.93E-06	1.78E-09	2.07E-08
PO_4^{-3}	2.34E-11	1.86E-11	1.59E-03	5.34E-04	0.00E+00	0.00E+00	2.13E-03	9.66E-07	1.12E-05
Resin	0.00E+00	0.00E+00	0.00E+00	0.00E+00	0.00E+00	0.00E+00	0.00E+00	0.00E+00	0.00E+00
Rh^{+3}	1.28E-14	1.10E-14	9.41E-07	8.21E-07	0.00E+00	0.00E+00	1.86E-06	8.47E-10	9.80E-09
Ru^{+3}	1.90E-14	1.60E-14	1.37E-06	8.34E-06	0.00E+00	0.00E+00	9.72E-06	4.42E-09	5.11E-08
S^{-6}	0.00E+00	0.00E+00	0.00E+00	3.44E-20	0.00E+00	0.00E+00	3.44E-20	1.56E-23	1.81E-22
SiO2	7.83E-12	3.92E-12	3.36E-04	1.84E-03	0.00E+00	0.00E+00	2.18E-03	9.91E-07	1.15E-05
SiO_4^{-4}	4.31E-19	3.31E-19	2.84E-11	2.77E-10	0.00E+00	0.00E+00	3.05E-10	1.39E-13	1.60E-12
SO_2	1.57E-37	8.39E-38	7.19E-30	0.00E+00	0.00E+00	0.00E+00	7.19E-30	3.27E-33	3.78E-32
SO_4^{-2}	3.58E-11	2.87E-11	2.46E-03	1.20E-04	0.00E+00	0.00E+00	2.58E-03	1.17E-06	1.36E-05
Sr^{+2}	8.86E-15	5.02E-15	4.30E-07	4.50E-06	0.00E+00	0.00E+00	4.93E-06	2.24E-09	2.59E-08
Sucrose	0.00E+00	0.00E+00	0.00E+00	4.32E-37	0.00E+00	0.00E+00	4.32E-37	1.96E-40	2.27E-39
Ti^{+4}	4.10E-14	1.64E-14	1.40E-06	5.43E-06	0.00E+00	0.00E+00	6.84E-06	3.11E-09	3.60E-08
Zn^{+2}	1.39E-13	7.61E-14	6.52E-06	1.11E-04	0.00E+00	0.00E+00	1.17E-04	5.33E-08	6.17E-07
Zr^{+4}	1.13E-13	8.81E-14	7.38E-06	8.10E-04	0.00E+00	0.00E+00	8.18E-04	2.81E-07	3.25E-06

Components	Aqueous Comp			Solid Comp	Gaseous		Total Comp		
Unit	mol/L	Lb/gal	Lb/day	Lb/day	mol/L	Lb/day	Lb/day	mol/day	g/sec
Total	1.46E-11	1.07E-11	9.18E-04	3.46E-03	0.00E+00	0.00E+00	4.38E-03	1.99E-06	2.30E-05

CALCULATION SHEET

BY: E. Barnes
DATE: 01/09/06

PROJECT: WTP
JOB. NO: 24590
CALC NO.: 24590-WTP-M4C-FRP-00005
SHEET REV: C
SHEET NO.: A-9

$C_2O_4^{2-}$	1.46E-11	1.07E-11	9.18E-04	3.46E-03	0.00E+00	0.00E+00	4.38E-03	1.99E-06	2.30E-05
Formate	1.96E-18	7.46E-19	6.39E-11	7.80E-10	0.00E+00	0.00E+00	8.44E-10	3.84E-13	4.44E-12
Acetate	1.54E-18	7.58E-19	6.50E-11	7.93E-10	0.00E+00	0.00E+00	8.58E-10	3.90E-13	4.51E-12
Glycolate	1.02E-17	6.41E-18	5.50E-10	7.85E-10	0.00E+00	0.00E+00	1.33E-09	6.06E-13	7.02E-12
IDA	5.17E-18	5.75E-18	4.93E-10	2.45E-10	0.00E+00	0.00E+00	7.38E-10	3.35E-13	3.88E-12
Citrate	4.73E-19	7.58E-19	6.50E-11	3.14E-10	0.00E+00	0.00E+00	3.79E-10	1.72E-13	2.00E-12
HEDTA	2.21E-18	5.14E-18	4.41E-10	2.95E-10	0.00E+00	0.00E+00	7.36E-10	3.35E-13	3.87E-12
EDTA	2.06E-19	6.49E-19	5.57E-11	3.01E-10	0.00E+00	0.00E+00	3.57E-10	1.62E-13	1.88E-12

Rad. Comp	Aqueous Rad. Comp			Solids Rad. Comp (1)			Total Rad. Comp (1)		
Unit	Ci/L	Ci/day	Lb/day	Ci/L	Ci/day	Lb/day	Ci/L	Ci/day	Lb/day
Total	1.18E-09	3.83E-01	5.54E-04	9.23E-10	3.00E-01	3.81E-03	2.10E-09	6.83E-01	4.17E-03
^{241}Am	2.59E-13	8.41E-05	5.41E-08	6.60E-12	2.14E-03	1.38E-06	6.86E-12	2.23E-03	1.43E-06
^{243}Am	1.69E-16	5.49E-08	6.07E-10	5.33E-16	1.73E-07	1.91E-09	7.02E-16	2.28E-07	2.52E-09
^{14}C	9.10E-15	2.95E-06	1.46E-09	7.76E-16	2.52E-07	1.24E-10	9.88E-15	3.21E-06	1.58E-09
^{60}Co	5.97E-14	1.94E-05	3.78E-11	1.21E-12	3.94E-04	7.67E-10	1.27E-12	4.13E-04	8.05E-10
^{243}Cm	4.80E-17	1.56E-08	6.79E-13	1.53E-14	4.98E-06	2.17E-10	1.54E-14	5.00E-06	2.18E-10
^{244}Cm	1.14E-15	3.69E-07	1.00E-11	3.49E-13	1.13E-04	3.09E-09	3.50E-13	1.14E-04	3.10E-09
^{137}Cs	1.09E-09	3.54E-01	8.99E-06	1.43E-10	4.64E-02	1.18E-06	1.23E-09	4.00E-01	1.02E-05
^{152}Eu	1.95E-15	6.33E-07	8.03E-12	3.51E-14	1.14E-05	1.45E-10	3.71E-14	1.20E-05	1.53E-10
^{154}Eu	4.04E-13	1.31E-04	1.07E-09	3.81E-12	1.24E-03	1.01E-08	4.21E-12	1.37E-03	1.11E-08
^{155}Eu	1.17E-13	3.80E-05	1.72E-10	5.64E-13	1.83E-04	8.30E-10	6.81E-13	2.21E-04	1.00E-09
^{3}H	4.51E-14	1.46E-05	3.36E-12	8.22E-12	2.67E-03	6.12E-10	8.26E-12	2.68E-03	6.15E-10
^{129}I	3.54E-16	1.15E-07	1.44E-08	7.86E-17	2.49E-08	3.10E-07	4.31E-16	1.40E-07	1.75E-06
^{63}Ni	6.42E-13	2.08E-04	8.08E-09	1.32E-13	4.30E-05	1.67E-09	7.74E-13	2.51E-04	9.75E-09
^{237}Np	3.52E-16	1.14E-07	3.57E-07	6.99E-13	2.92E-06	9.12E-06	9.34E-15	3.03E-06	9.48E-06
^{238}Pu	1.18E-15	3.78E-07	4.84E-11	2.57E-14	8.32E-06	1.07E-06	2.66E-14	8.70E-06	1.12E-09
^{239}Pu	1.60E-14	5.21E-06	1.65E-07	2.27E-13	7.37E-05	2.62E-06	2.43E-13	7.90E-05	2.81E-06
^{240}Pu	4.16E-15	1.35E-06	1.31E-08	6.00E-14	1.95E-05	1.89E-07	6.41E-14	2.08E-05	2.02E-07
^{241}Pu	8.73E-14	2.83E-05	8.08E-10	1.61E-12	5.22E-04	1.12E-08	1.70E-12	5.51E-04	1.18E-08
^{242}Pu	3.15E-20	1.02E-11	5.73E-12	5.53E-18	1.80E-09	1.01E-09	5.56E-18	1.81E-09	1.01E-09
^{125}Sb	2.42E-13	7.86E-05	1.67E-10	2.35E-12	7.61E-04	1.62E-09	2.59E-12	8.40E-04	1.78E-09
^{151}Sm	3.39E-12	1.10E-03	9.21E-06	2.63E-11	8.18E-03	7.69E-07	3.17E-11	1.03E-02	8.61E-07
^{126}Sn	3.85E-15	1.25E-06	2.43E-07	1.10E-14	3.57E-06	6.93E-07	1.48E-14	4.82E-06	9.36E-07
^{90}Sr	8.35E-11	2.71E-02	4.32E-07	7.24E-10	2.35E-01	3.75E-06	8.07E-10	2.62E-01	4.18E-06
^{99}Tc	1.15E-12	3.72E-04	4.84E-05	2.89E-12	9.39E-04	1.22E-04	4.04E-12	1.31E-03	1.70E-04
^{229}Th	1.07E-17	3.47E-09	6.96E-05	2.97E-16	9.64E-08	1.93E-03	3.08E-16	9.99E-08	2.00E-03
^{232}U	3.57E-16	1.16E-07	2.85E-08	2.44E-14	7.90E-06	1.81E-06	2.47E-14	8.02E-06	1.83E-06
^{234}U	2.53E-16	8.21E-08	2.92E-06	1.27E-15	4.11E-07	1.46E-07	1.52E-15	4.93E-07	1.75E-07
^{235}U	9.97E-18	3.23E-09	3.30E-08	3.04E-17	9.88E-09	1.01E-05	4.04E-17	1.31E-08	1.34E-05
^{236}U	1.71E-17	5.54E-09	1.89E-07	4.18E-17	1.36E-08	4.63E-07	5.89E-17	1.91E-08	6.52E-07
^{238}U	1.98E-16	6.42E-06	4.21E-04	7.16E-16	2.32E-07	1.53E-03	9.14E-16	2.97E-07	1.95E-03

(1) All radionuclides in gaseous streams are assumed to exist as solid particulate.

CAS Comp	Organic Components				
Unit	mol/L	Lb/gal	Lb/day	M/day	g/sec
Total	6.81E-05	3.53E-05	3.03E-03	1.38E+00	1.59E+01
50-32-8	1.48E-09	3.11E-09	2.66E-01	1.21E-04	1.40E-03
56-23-5	4.95E-09	6.35E-09	5.44E-01	2.47E-04	2.86E-03
57-14-7	3.78E-08	1.59E-08	1.62E+00	7.38E-04	8.54E-03
58-90-2	8.15E-09	1.58E-08	1.35E+00	6.15E-04	7.12E-03
59-89-2	8.58E-08	9.28E-08	7.96E+00	3.62E-03	4.19E-02
60-35-5	3.80E-11	1.87E-11	1.61E-03	7.31E-07	8.46E-06
62-75-9	1.29E-08	7.98E-09	6.84E-01	3.11E-04	3.60E-03
64-19-7	6.69E-05	3.35E-05	2.87E+03	1.31E+00	1.51E+01
71-43-2	9.74E-09	6.35E-09	5.44E-01	2.47E-04	2.86E-03
75-05-8	1.87E-08	5.72E-09	4.91E-01	2.23E-04	2.58E-03
75-12-7	3.74E-11	1.41E-11	1.21E-03	5.48E-07	6.34E-06
76-15-3	1.23E-08	1.58E-08	1.36E+00	6.18E-04	7.16E-03
79-01-6	1.45E-08	1.58E-08	1.36E+00	6.18E-04	7.16E-03
83-32-9	7.21E-08	9.28E-08	7.95E+00	3.61E-03	4.18E-02
84-66-2	2.45E-09	4.55E-09	3.90E-01	1.77E-04	2.05E-03
84-74-2	3.90E-09	9.08E-09	7.77E-01	3.53E-04	4.09E-03
87-68-3	7.28E-09	1.58E-08	1.36E+00	6.18E-04	7.15E-03
88-89-1	8.89E-14	1.72E-13	1.47E-05	6.70E-09	7.76E-08
91-20-3	2.70E-09	2.89E-09	2.48E-01	1.13E-04	1.30E-03
95-50-1	5.04E-09	6.18E-09	5.30E-01	2.41E-04	2.79E-03
98-86-2	1.14E-08	1.14E-08	9.80E-01	4.46E-04	5.16E-03
100-21-0	3.81E-15	5.28E-15	4.53E-07	2.06E-10	2.38E-06
101-84-8	1.09E-08	1.55E-08	1.33E+00	6.03E-04	6.98E-03
106-93-4	3.85E-09	6.04E-09	5.18E-01	2.35E-04	2.72E-03
106-97-8	3.27E-08	1.58E-08	1.36E+00	6.18E-04	7.16E-03
106-99-0	1.41E-08	6.35E-09	5.44E-01	2.47E-04	2.86E-03
108-87-2	1.94E-08	1.58E-08	1.36E+00	6.20E-04	7.17E-03
108-88-3	6.25E-09	6.35E-09	5.44E-01	2.47E-04	2.86E-03
108-95-2	3.70E-09	2.91E-09	2.49E-01	1.13E-04	1.31E-03
110-54-3	2.21E-08	1.58E-08	1.36E+00	6.18E-04	7.15E-03
110-82-7	2.26E-08	1.58E-08	1.36E+00	6.20E-04	7.17E-03
111-84-2	1.48E-08	1.58E-08	1.36E+00	6.18E-04	7.16E-03
120-12-7	3.01E-08	4.47E-08	3.83E+00	1.74E-03	2.02E-02
120-82-1	1.03E-08	1.57E-08	1.34E+00	6.11E-04	7.07E-03
122-39-4	2.46E-08	3.47E-09	2.98E-01	1.35E-04	1.57E-03
126-73-8	4.55E-10	1.01E-09	8.66E-02	3.94E-05	4.56E-04
127-18-4	4.58E-09	6.34E-09	5.44E-01	2.47E-04	2.86E-03
129-00-0	1.23E-08	2.07E-08	1.78E+00	8.06E-04	9.35E-03
132-64-9	5.39E-08	7.57E-08	6.49E+00	2.95E-03	3.41E-02
144-62-7	9.64E-11	7.24E-11	6.21E-03	2.82E-06	3.27E-05
193-39-5	2.82E-07	6.49E-07	5.57E+01	2.53E-02	2.93E-01
206-44-0	5.50E-08	9.29E-08	7.96E+00	3.62E-03	4.19E-02
208-96-8	4.67E-08	6.18E-08	5.30E+00	2.41E-03	2.79E-02
603-34-9	6.12E-09	1.25E-08	1.07E+00	4.88E-04	5.65E-03
621-64-7	8.54E-08	9.28E-08	7.96E+00	3.62E-03	4.19E-02
1321-64-8	3.71E-08	9.29E-08	7.97E+00	3.62E-03	4.19E-02
1336-36-3	3.55E-09	9.55E-09	8.19E-01	3.72E-04	4.31E-03
3697-24-3	4.60E-08	9.29E-08	7.97E+00	3.62E-03	4.19E-02
4170-30-3	4.72E-09	2.78E-09	2.37E-01	1.08E-04	1.25E-03
10061-01-5	6.83E-09	6.32E-09	5.42E-01	2.46E-04	2.85E-03
26140-60-3	4.84E-08	9.30E-08	7.97E+00	3.62E-03	4.19E-02

BY: E. Berrios
DATE: 01/09/08

Table A-5 PJV04 Stream Report

Stream Number: PJV04
Stream Name: Vapor feed to demister
Configuration: MRQ-05-0049.acmf
Run Date / Time: 12/14/2005 - 1:42:25 PM
Run Data File: H:\ACM v3.1\MRQ-05-0049\MRQ_05_0049A_Streams.csv

Variable	Value	Units	
Density	1.15E-03	g/cm³	(does not include solid phase)
Enthalpy	-8.69E+06	BTU/hr	
Mass Flow	1.71E+05	Lb/hr	
	4.10E+06	Lb/day	
Volumetric Flow	2.96E+05	GPM	(does not include solid phase)
	3.96E+04	ft³/min	(does not include solid phase)
Molar Flow	5.95E+03	Lbmol/hr	
Molecular Weight	2.87E+01	Lb/Lbmol	
Pressure	9.93E+02	mbar	
Temperature	2.50E+01	C	
Na Molarity	0.00E+00	mol/L	
pH	4.16E+00	pH	
Total TRU	2.55E-12	Ci/L	
Total Activity	4.31E-10	Ci/L	

Component	Aqueous Comp			Solid Comp	Gaseous (1)		Total Comp		
Unit	mol/L	Lb/gal	Lb/day	Lb/day	mol/L	Lb/day	Lb/day	mt/day	g/sec
Total	5.96E-09	9.45E-10	4.03E-01	1.86E-02	4.01E-02	4.10E+06	4.10E+06	1.86E+03	2.10E+04
Ag^{+}	1.85E-15	1.67E-15	7.13E-07	1.30E-05	0.00E+00	0.00E+00	1.37E-05	6.21E-08	7.19E-08
Al^{+3}	2.25E-11	5.08E-12	2.16E-03	1.79E-03	0.00E+00	0.00E+00	3.95E-03	1.80E-06	2.08E-05
As^{+3}	8.18E-15	5.11E-15	2.18E-06	9.12E-07	0.00E+00	0.00E+00	3.04E-06	1.41E-09	1.63E-08
B^{+3}	1.36E-13	1.22E-14	5.23E-06	8.60E-05	0.00E+00	0.00E+00	9.12E-05	4.14E-08	4.80E-07
Ba^{+2}	1.71E-15	1.95E-15	8.34E-07	1.15E-05	0.00E+00	0.00E+00	1.24E-05	5.63E-09	6.51E-08
Bi^{+3}	2.01E-15	3.51E-15	1.50E-06	6.05E-05	0.00E+00	0.00E+00	6.20E-05	2.82E-08	3.26E-07
Ca^{+2}	1.42E-13	4.76E-14	2.03E-05	7.75E-05	0.00E+00	0.00E+00	9.78E-05	4.45E-08	5.15E-07
Cd^{+2}	3.17E-15	2.97E-15	1.27E-06	4.69E-05	0.00E+00	0.00E+00	4.82E-05	2.19E-08	2.53E-07
Ce^{+3}	6.75E-14	7.90E-14	3.37E-05	1.44E-05	0.00E+00	0.00E+00	4.81E-05	2.19E-08	2.53E-07
Cl	3.79E-12	1.12E-12	4.79E-04	1.40E-05	0.00E+00	0.00E+00	4.92E-04	2.24E-07	2.59E-06
CO	1.10E-111	2.57E-112	1.10E-103	0.00E+00	0.00E+00	0.00E+00	1.10E-103	4.99E-107	5.78E-106
CO_2	1.36E-16	4.99E-17	2.13E-08	0.00E+00	4.20E-16	6.58E-08	8.71E-08	3.96E-11	4.58E-10
CO_3^{-2}	1.80E-11	9.01E-12	3.84E-03	1.57E-03	0.00E+00	0.00E+00	5.42E-03	2.46E-06	2.85E-05
Cr^{+2}	5.43E-13	2.36E-13	1.01E-04	3.66E-05	0.00E+00	0.00E+00	1.37E-04	6.23E-08	7.21E-07
Cu^{+2}	3.13E-15	1.66E-15	7.10E-07	4.89E-06	0.00E+00	0.00E+00	5.60E-06	2.55E-09	2.95E-08
F^{-}	1.78E-12	2.83E-13	1.21E-04	2.54E-04	0.00E+00	0.00E+00	3.75E-04	1.71E-07	1.97E-06
Fe^{+3}	9.72E-14	4.53E-14	1.93E-05	1.84E-03	0.00E+00	0.00E+00	1.86E-03	8.45E-07	9.78E-06
H_2O	5.28E-09	7.93E-10	3.39E-01	0.00E+00	5.63E-04	3.61E+04	3.61E+04	1.64E+01	1.90E+02
$H_2O(b)$	0.00E+00	0.00E+00	0.00E+00	0.00E+00	0.00E+00	0.00E+00	0.00E+00	0.00E+00	0.00E+00
H^{+}	3.79E-12	3.19E-14	1.36E-05	0.00E+00	0.00E+00	0.00E+00	1.36E-05	6.19E-09	7.17E-08
HCL	0.00E+00	0.00E+00	0.00E+00	0.00E+00	0.00E+00	0.00E+00	0.00E+00	0.00E+00	0.00E+00
HCO3-	1.87E-15	9.51E-16	4.06E-07	9.36E-22	0.00E+00	0.00E+00	4.06E-07	1.84E-10	2.14E-09
H2CO3	0.00E+00	0.00E+00	0.00E+00	0.00E+00	0.00E+00	0.00E+00	0.00E+00	0.00E+00	0.00E+00
HF	0.00E+00	0.00E+00	0.00E+00	0.00E+00	0.00E+00	0.00E+00	0.00E+00	0.00E+00	0.00E+00
Hg^{+2}	3.28E-15	5.49E-15	2.35E-06	2.90E-05	0.00E+00	0.00E+00	3.14E-05	1.43E-08	1.65E-07
HNO_3	0.00E+00	0.00E+00	0.00E+00	0.00E+00	0.00E+00	0.00E+00	0.00E+00	0.00E+00	0.00E+00
K^{+}	7.79E-12	2.54E-12	1.08E-03	3.59E-05	0.00E+00	0.00E+00	1.12E-03	5.09E-07	5.89E-06
La^{+3}	8.70E-16	1.01E-15	4.30E-07	2.17E-05	0.00E+00	0.00E+00	2.21E-05	1.00E-08	1.16E-07
Li^{+}	1.18E-13	6.81E-15	2.91E-06	5.37E-06	0.00E+00	0.00E+00	8.28E-06	3.76E-09	4.36E-08
Mg^{+2}	2.59E-14	5.24E-15	2.24E-06	1.60E-05	0.00E+00	0.00E+00	1.82E-05	8.26E-09	9.56E-08
Mn^{+3}	2.80E-14	1.29E-14	5.49E-06	1.69E-04	0.00E+00	0.00E+00	1.75E-04	7.93E-08	9.18E-07
MnO_4^{-}	0.00E+00	0.00E+00	0.00E+00	0.00E+00	0.00E+00	0.00E+00	0.00E+00	0.00E+00	0.00E+00
N_2	5.53E-14	1.29E-14	5.51E-06	0.00E+00	3.12E-02	3.12E+06	3.12E+06	1.42E+03	1.64E+04
Na^{+}	2.45E-10	4.71E-11	2.01E-02	2.83E-03	0.00E+00	0.00E+00	2.29E-02	1.04E-05	1.21E-04
NH3	1.67E-13	2.38E-14	1.01E-05	0.00E+00	0.00E+00	0.00E+00	1.01E-05	4.61E-09	5.34E-08
NH4+	1.25E-14	2.38E-14	8.01E-07	4.12E-23	0.00E+00	0.00E+00	8.01E-07	3.64E-10	4.21E-09
Ni^{+2}	4.50E-14	2.20E-14	9.41E-06	7.54E-05	0.00E+00	0.00E+00	8.48E-05	3.86E-08	4.46E-07
NO	6.65E-37	1.87E-37	7.11E-29	0.00E+00	0.00E+00	0.00E+00	7.11E-29	3.23E-32	3.74E-31
NO_1	9.78E-50	3.75E-50	1.60E-41	0.00E+00	0.00E+00	0.00E+00	1.60E-41	7.27E-45	8.42E-44
NO_2^{-}	4.88E-11	1.87E-11	8.00E-03	7.09E-04	0.00E+00	0.00E+00	8.71E-03	3.96E-06	4.58E-05
NO_3^{-}	8.58E-11	4.44E-11	1.90E-02	5.47E-04	0.00E+00	0.00E+00	1.95E-02	8.87E-06	1.03E-04
O_2	1.78E-14	4.78E-15	2.03E-06	0.00E+00	8.30E-03	9.46E+05	9.46E+05	4.30E+02	4.98E+03
O^{-}	0.00E+00	0.00E+00	0.00E+00	2.62E-04	0.00E+00	0.00E+00	2.62E-04	1.19E-07	1.38E-06
OH^{-}	1.43E-10	2.03E-11	8.68E-03	6.48E-03	0.00E+00	0.00E+00	1.52E-02	6.89E-06	7.97E-05
OH(b)	2.16E-19	3.07E-20	1.31E-11	5.92E-25	0.00E+00	0.00E+00	1.31E-11	5.96E-15	6.90E-14
Pb^{+1}	1.15E-14	1.99E-14	8.49E-06	9.90E-05	0.00E+00	0.00E+00	1.07E-04	4.88E-08	5.65E-07
Pd^{+2}	8.90E-16	7.90E-16	3.37E-07	4.06E-06	0.00E+00	0.00E+00	4.40E-06	2.00E-09	2.31E-08
PO_4^{-3}	9.18E-13	7.28E-13	3.11E-04	4.47E-04	0.00E+00	0.00E+00	7.57E-04	3.44E-07	3.98E-06
Resin	0.00E+00	0.00E+00	0.00E+00	0.00E+00	0.00E+00	0.00E+00	0.00E+00	0.00E+00	0.00E+00
Rh^{+3}	8.60E-16	7.39E-16	3.16E-07	1.32E-06	0.00E+00	0.00E+00	1.63E-06	7.41E-10	8.58E-09
Ru^{+3}	1.28E-15	1.08E-15	4.61E-07	1.23E-05	0.00E+00	0.00E+00	1.27E-05	5.76E-09	6.66E-08
S^{+6}	0.00E+00	0.00E+00	0.00E+00	3.67E-22	0.00E+00	0.00E+00	3.67E-22	1.67E-25	1.93E-24
SiO2	1.73E-13	8.69E-14	3.71E-05	4.46E-04	0.00E+00	0.00E+00	4.83E-04	2.19E-07	2.54E-06
SiO_4^{-4}	9.10E-26	7.00E-26	2.99E-17	7.91E-12	0.00E+00	0.00E+00	7.91E-12	3.59E-15	4.16E-14
SO_2	1.40E-52	7.48E-53	3.19E-44	0.00E+00	0.00E+00	0.00E+00	3.19E-44	1.45E-47	1.68E-46
SO_4^{-2}	2.19E-12	1.76E-12	7.50E-04	1.61E-04	0.00E+00	0.00E+00	9.11E-04	4.14E-07	4.79E-06
Sr^{+2}	4.57E-16	3.34E-16	1.43E-07	6.44E-06	0.00E+00	0.00E+00	6.59E-06	2.99E-09	3.47E-08
Sucrose	0.00E+00	0.00E+00	0.00E+00	0.00E+00	0.00E+00	0.00E+00	0.00E+00	0.00E+00	0.00E+00
Tl^{+4}	1.43E-15	5.71E-16	2.44E-07	2.73E-06	0.00E+00	0.00E+00	2.98E-06	1.35E-09	1.57E-08
Zn^{+2}	5.35E-15	2.92E-15	1.25E-06	2.00E-05	0.00E+00	0.00E+00	2.13E-05	9.68E-09	1.12E-07
Zr^{+4}	3.94E-15	3.00E-15	1.28E-06	4.48E-04	0.00E+00	0.00E+00	4.49E-04	2.04E-07	2.36E-06

Components	Aqueous Comp			Solid Comp	Gaseous		Total Comp		
Unit	mol/L	Lb/gal	Lb/day	Lb/day	mol/L	Lb/day	Lb/day	Mt/day	g/sec
Total	9.07E-13	6.66E-13	2.84E-04	2.24E-03	0.00E+00	0.00E+00	2.52E-03	1.15E-06	1.33E-05

CALCULATION SHEET

BY: E. Berrios
DATE: 01/09/06

PROJECT: WTP
JOB. NO.: 24590
CALC NO.: 24590-WTP-M4C-FRP-00005
SHEET REV: C
SHEET NO: A-11

$C_2O_4^{-2}$	9.07E-13	6.66E-13	2.84E-04	2.24E-03	0.00E+00	0.00E+00	2.52E-03	1.15E-06	1.33E-05
Formate	4.02E-25	1.51E-25	6.44E-17	3.08E-13	0.00E+00	0.00E+00	3.08E-13	1.40E-16	1.62E-15
Acetate	3.11E-25	1.53E-25	6.55E-17	3.13E-13	0.00E+00	0.00E+00	3.13E-13	1.42E-16	1.65E-15
Glycolate	2.07E-24	1.30E-24	5.54E-16	1.54E-13	0.00E+00	0.00E+00	1.54E-13	7.02E-17	8.13E-16
IDA	1.06E-24	1.18E-24	5.03E-16	3.93E-13	0.00E+00	0.00E+00	3.93E-13	1.79E-16	2.07E-15
Citrate	9.89E-26	1.55E-25	6.64E-17	3.37E-13	0.00E+00	0.00E+00	3.37E-13	1.53E-16	1.77E-15
HEDTA	4.54E-25	1.05E-24	4.50E-16	2.78E-13	0.00E+00	0.00E+00	2.77E-13	1.26E-16	1.46E-15
EDTA	5.46E-26	1.33E-25	5.68E-17	2.97E-13	0.00E+00	0.00E+00	2.97E-13	1.35E-16	1.56E-15

Rad Comp	Aqueous Rad. Comp			Solids Rad. Comp (1)			Total Rad. Comp (1)		
Unit	Ci/L	Ci/day	Lb/day	Ci/L	Ci/day	Lb/day	Ci/L	Ci/day	Lb/day
Total	1.66E-10	2.68E-01	1.13E-04	2.65E-10	4.28E-01	3.12E-03	4.31E-10	6.96E-01	3.23E-03
^{241}Am	1.75E-14	2.82E-05	1.81E-08	1.90E-12	3.06E-03	1.96E-06	1.92E-12	3.10E-03	2.00E-06
^{243}Am	1.14E-17	1.84E-08	2.04E-10	1.54E-16	2.49E-07	2.75E-09	1.65E-16	2.67E-07	2.95E-09
^{14}C	3.57E-16	5.76E-07	2.85E-10	1.34E-16	2.17E-07	1.07E-10	4.91E-16	7.93E-07	3.92E-10
^{60}Co	2.34E-15	3.78E-06	7.37E-12	2.10E-13	3.40E-04	6.62E-10	2.13E-13	3.44E-04	6.69E-10
^{243}Cm	1.88E-18	3.04E-09	1.33E-13	2.66E-15	4.30E-06	1.88E-10	2.66E-15	4.30E-06	1.88E-10
^{244}Cm	4.46E-17	7.20E-08	1.96E-12	6.05E-14	9.77E-05	2.66E-09	6.05E-14	9.78E-05	2.66E-09
^{137}Cs	1.80E-10	2.90E-01	6.58E-06	4.31E-11	6.96E-02	1.77E-06	2.03E-10	3.29E-01	8.34E-06
^{152}Eu	1.31E-18	2.12E-07	2.89E-12	1.01E-14	1.64E-05	2.07E-10	1.03E-14	1.66E-05	2.10E-10
^{154}Eu	2.72E-14	4.40E-05	3.59E-10	1.10E-12	1.77E-03	1.45E-08	1.12E-12	1.82E-03	1.48E-08
^{155}Eu	7.87E-15	1.27E-05	5.77E-11	1.62E-13	2.62E-04	1.19E-09	1.70E-13	2.75E-04	1.25E-09
^{3}H	2.18E-15	3.53E-06	8.10E-13	3.48E-15	5.63E-06	1.29E-12	5.67E-15	9.16E-06	2.10E-12
^{129}I	1.09E-17	1.76E-08	2.19E-07	7.02E-18	1.13E-06	1.42E-07	1.79E-17	2.89E-06	3.61E-07
^{63}Ni	4.22E-14	6.81E-05	2.64E-09	3.65E-14	5.90E-05	2.29E-09	7.87E-14	1.27E-04	4.93E-09
^{237}Np	1.36E-17	2.23E-08	6.99E-08	1.58E-15	2.52E-06	7.87E-08	1.57E-15	2.54E-06	7.94E-08
^{238}Pu	7.91E-17	1.28E-07	1.62E-11	7.39E-15	1.19E-05	1.54E-09	7.47E-15	1.21E-05	1.55E-09
^{239}Pu	1.08E-15	1.75E-06	6.20E-08	6.55E-14	1.06E-04	3.76E-06	6.66E-14	1.08E-04	3.82E-06
^{240}Pu	2.80E-16	4.52E-07	4.39E-09	1.73E-14	2.79E-05	2.71E-07	1.76E-14	2.84E-05	2.76E-07
^{241}Pu	5.87E-15	9.49E-06	2.03E-10	4.64E-13	7.49E-04	1.60E-08	4.70E-13	7.59E-04	1.62E-08
^{242}Pu	2.96E-20	4.79E-11	2.68E-11	1.59E-18	2.57E-09	1.44E-09	1.62E-18	2.62E-09	1.47E-09
^{125}Sb	1.92E-14	2.62E-05	5.58E-11	6.73E-13	1.09E-03	2.31E-09	6.89E-13	1.11E-03	2.37E-09
^{151}Sm	2.26E-13	3.69E-04	3.09E-08	8.14E-12	1.32E-02	1.10E-06	8.37E-12	1.35E-02	1.13E-06
^{126}Sn	2.58E-16	4.17E-07	8.10E-08	3.15E-15	5.09E-06	9.88E-07	3.41E-15	5.51E-06	1.07E-06
^{90}Sr	5.57E-12	9.00E-03	1.44E-07	2.08E-10	3.36E-01	5.37E-06	2.14E-10	3.45E-01	5.51E-06
^{99}Tc	4.49E-14	7.26E-05	9.44E-08	4.83E-13	7.81E-04	1.02E-04	5.28E-13	8.54E-04	1.11E-04
^{232}Th	4.20E-18	6.78E-10	1.38E-05	5.15E-17	8.33E-08	1.67E-03	5.20E-17	8.40E-08	1.68E-03
^{233}U	1.40E-17	2.26E-08	5.17E-09	4.22E-15	6.82E-06	1.56E-06	4.23E-15	6.84E-06	1.56E-06
^{234}U	9.93E-18	1.61E-08	5.70E-09	2.19E-16	3.54E-07	1.26E-07	2.29E-16	3.71E-07	1.32E-07
^{235}U	3.91E-19	6.32E-10	6.45E-07	5.27E-18	8.52E-09	8.69E-06	5.66E-18	9.15E-09	9.34E-06
^{236}U	6.70E-19	1.08E-09	3.69E-08	7.24E-18	1.17E-08	3.99E-07	7.91E-18	1.28E-08	4.36E-07
^{238}U	7.78E-18	1.25E-08	8.22E-05	1.24E-16	2.01E-07	1.32E-03	1.32E-16	2.13E-07	1.40E-03

(1) All radionuclides in gaseous streams are assumed to exist as solid particulate.

CAS Comp	Organic Components				
Unit	mol/L	Lb/gal	Lb/day	Mt/day	g/sec
Total	1.06E-11	6.12E-12	2.61E-03	1.19E-06	1.37E-05
50-32-8	1.00E-14	2.11E-14	9.00E-06	4.09E-09	4.73E-08
56-23-5	5.75E-16	7.38E-16	3.15E-07	1.43E-10	1.66E-09
57-14-7	3.05E-14	1.53E-14	6.54E-06	2.97E-09	3.44E-08
58-90-2	8.19E-15	1.58E-14	6.76E-06	3.07E-09	3.56E-08
59-89-2	1.16E-14	1.12E-14	4.80E-06	2.18E-09	2.53E-08
60-35-5	1.02E-14	5.02E-15	2.14E-06	9.75E-10	1.13E-08
62-75-9	3.22E-14	1.99E-14	8.49E-06	3.86E-09	4.47E-08
64-19-7	8.10E-12	4.06E-12	1.73E-03	7.86E-07	9.12E-06
71-43-2	1.13E-15	7.39E-16	3.15E-07	1.43E-10	1.66E-09
75-05-8	6.86E-15	2.35E-15	1.00E-06	4.56E-10	5.28E-09
75-12-7	8.06E-14	3.03E-14	1.29E-05	5.86E-09	6.80E-08
76-15-3	1.43E-15	1.84E-15	7.87E-07	3.58E-10	4.14E-09
79-01-6	1.64E-15	1.85E-15	7.88E-07	3.58E-10	4.15E-09
83-32-9	8.73E-15	1.12E-14	4.80E-06	2.18E-09	2.52E-08
84-66-2	1.31E-14	2.43E-14	1.04E-05	4.72E-09	5.46E-08
84-74-2	9.45E-15	2.20E-14	9.37E-06	4.26E-09	4.93E-08
87-68-3	8.47E-16	1.84E-15	7.87E-07	3.58E-10	4.14E-09
88-89-1	1.59E-14	3.04E-14	1.30E-05	5.89E-09	6.82E-08
91-20-3	3.59E-16	3.84E-16	1.64E-07	7.46E-11	8.63E-10
95-50-1	6.10E-16	7.49E-16	3.20E-07	1.45E-10	1.68E-09
98-86-2	1.03E-14	1.04E-14	4.44E-06	2.02E-09	2.33E-08
100-21-0	6.11E-14	8.47E-14	3.61E-05	1.64E-08	1.90E-07
101-84-8	1.32E-15	1.87E-15	8.00E-07	3.64E-10	4.21E-09
106-93-4	4.83E-16	7.57E-16	3.23E-07	1.47E-10	1.70E-09
108-87-8	3.80E-15	1.84E-15	7.87E-07	3.58E-10	4.14E-09
108-99-0	1.63E-15	7.37E-16	3.15E-07	1.43E-10	1.66E-08
108-87-2	2.25E-15	1.85E-15	7.89E-07	3.58E-10	4.15E-09
108-88-3	9.80E-16	7.38E-16	3.15E-07	1.43E-10	1.66E-09
108-95-2	3.37E-14	2.64E-14	1.13E-05	5.13E-09	5.94E-08
110-54-3	2.56E-15	1.84E-15	7.87E-07	3.58E-10	4.14E-09
110-82-7	2.63E-15	1.85E-15	7.89E-07	3.58E-10	4.15E-09
111-84-2	1.72E-15	1.85E-15	7.88E-07	3.58E-10	4.14E-09
120-12-7	9.09E-15	1.35E-14	5.77E-06	2.62E-09	3.04E-08
120-82-1	1.23E-15	1.86E-15	7.95E-07	3.61E-10	4.18E-09
122-39-4	4.27E-15	6.03E-15	2.58E-06	1.17E-09	1.36E-08
126-73-8	8.68E-15	1.97E-14	8.43E-06	3.83E-09	4.43E-08
127-18-4	5.33E-16	7.38E-16	3.15E-07	1.43E-10	1.66E-08
129-00-0	1.00E-14	1.69E-14	7.20E-06	3.27E-09	3.78E-08
132-64-9	8.56E-15	1.20E-14	5.14E-06	2.34E-09	2.71E-08
144-62-7	2.02E-12	1.52E-12	6.48E-04	2.94E-07	3.41E-06
193-39-5	1.33E-14	3.06E-14	1.30E-05	5.93E-09	6.86E-08
206-44-0	6.87E-15	1.13E-14	4.80E-06	2.18E-09	2.53E-08
208-96-8	9.97E-15	1.27E-14	5.41E-06	2.46E-09	2.85E-08
603-34-9	8.20E-15	1.68E-14	7.16E-06	3.26E-09	3.77E-08
621-64-7	1.03E-14	1.12E-14	4.80E-06	2.18E-09	2.53E-08
1321-64-8	4.49E-15	1.13E-14	4.80E-06	2.18E-09	2.53E-08
1336-36-3	2.27E-16	6.11E-16	2.61E-07	1.19E-10	1.37E-09
3697-24-3	5.57E-15	1.13E-14	4.81E-06	2.19E-09	2.53E-08
4170-30-3	4.48E-15	2.62E-15	1.12E-06	5.08E-10	5.88E-09
10061-01-5	7.99E-16	7.40E-16	3.16E-07	1.44E-10	1.66E-09
26140-60-3	5.86E-15	1.13E-14	4.81E-06	2.19E-06	2.53E-08

Table A-6 LMP06 Stream Report

Stream Number: LMP06
Stream Name: Melter offgas (primary)
Configuration: MRQ-05-0049.acmf
Run Date / Time: 12/14/2005 - 1:42:25 PM
Run Data File: H:\ACM v3.1\MRQ-05-0049\MRQ_05_0049A_Streams.csv

Variable	Value	Units	
Density	4.01E-04	g/cm³	(does not include solid phase)
Enthalpy	-2.53E+07	BTU/hr	
Mass Flow	8.97E+03	Lb/hr	
	2.15E+05	Lb/day	
Volumetric Flow	4.43E+04	GPM	(does not include solid phase)
	5.92E+03	ft³/min	(does not include solid phase)
Molar Flow	3.90E+02	Lbmol/hr	
Molecular Wmg/M	2.28E+01	Lb/Lbmol	
Pressure	9.83E+02	mbar	
Temperature	4.00E+02	C	
Na Molarity	0.00E+00	mol/L	
pH	0.00E+00	pH	
Total TRU	1.10E-06	Ci/L	
Total Activity	3.68E-07	Ci/L	

Component	Aqueous Comp			Solid Comp	Gaseous (1)		Total Comp		
Unit	mol/L	Lb/gal	Lb/day	Lb/day	mol/L	Lb/day	Lb/day	mt/day	g/sec
Total	0.00E+00	0.00E+00	0.00E+00	1.01E+03	1.78E-02	2.13E+05	2.14E+05	9.72E+01	1.13E+03
Ag^+	0.00E+00	0.00E+00	0.00E+00	1.55E-02	0.00E+00	0.00E+00	1.55E-02	7.06E-06	8.17E-05
Al^{+3}	0.00E+00	0.00E+00	0.00E+00	3.83E+01	0.00E+00	0.00E+00	3.83E+01	1.85E-02	1.91E-01
As^{+3}	0.00E+00	0.00E+00	0.00E+00	2.75E-01	0.00E+00	0.00E+00	2.75E-01	1.25E-04	1.45E-03
B^{+3}	0.00E+00	0.00E+00	0.00E+00	1.13E+02	0.00E+00	0.00E+00	1.13E+02	5.14E-02	5.95E-01
Ba^{+2}	0.00E+00	0.00E+00	0.00E+00	5.32E-03	0.00E+00	0.00E+00	5.32E-03	2.42E-06	2.80E-05
Bi^{+3}	0.00E+00	0.00E+00	0.00E+00	1.20E-02	0.00E+00	0.00E+00	1.20E-02	5.45E-06	6.31E-05
Ca^{+2}	0.00E+00	0.00E+00	0.00E+00	4.30E+01	0.00E+00	0.00E+00	4.30E+01	1.95E-02	2.26E-01
Cd^{+2}	0.00E+00	0.00E+00	0.00E+00	1.05E-01	0.00E+00	0.00E+00	1.05E-01	4.79E-05	5.54E-04
Ce^{+3}	0.00E+00	0.00E+00	0.00E+00	1.20E-01	0.00E+00	0.00E+00	1.20E-01	5.45E-05	6.31E-04
Cr	0.00E+00	0.00E+00	0.00E+00	0.00E+00	0.00E+00	0.00E+00	0.00E+00	0.00E+00	0.00E+00
CO	0.00E+00	0.00E+00	0.00E+00	0.00E+00	6.30E-06	9.39E+01	9.39E+01	4.27E-02	4.94E-01
CO_2	0.00E+00	0.00E+00	0.00E+00	0.00E+00	6.30E-04	1.48E+04	1.48E+04	6.71E+00	7.76E+01
CO_3^{-2}	0.00E+00	0.00E+00	0.00E+00	0.00E+00	0.00E+00	0.00E+00	0.00E+00	0.00E+00	0.00E+00
Cr^{+3}	0.00E+00	0.00E+00	0.00E+00	1.72E+00	0.00E+00	0.00E+00	1.72E+00	7.83E-04	9.07E-03
Cu^{+2}	0.00E+00	0.00E+00	0.00E+00	2.25E-03	0.00E+00	0.00E+00	2.25E-03	1.02E-06	1.18E-05
F^-	0.00E+00	0.00E+00	0.00E+00	0.00E+00	0.00E+00	0.00E+00	0.00E+00	0.00E+00	0.00E+00
Fe^{+3}	0.00E+00	0.00E+00	0.00E+00	2.28E+01	0.00E+00	0.00E+00	2.28E+01	1.04E-02	1.20E-01
H_2O	0.00E+00	0.00E+00	0.00E+00	0.00E+00	1.10E-02	1.05E+05	1.05E+05	4.78E+01	5.53E+02
$H_2O(b)$	0.00E+00	0.00E+00	0.00E+00	0.00E+00	0.00E+00	0.00E+00	0.00E+00	0.00E+00	0.00E+00
H^+	0.00E+00	0.00E+00	0.00E+00	0.00E+00	0.00E+00	0.00E+00	0.00E+00	0.00E+00	0.00E+00
HCL	0.00E+00	0.00E+00	0.00E+00	0.00E+00	9.41E-06	1.83E+02	1.83E+02	8.30E-02	9.61E-01
HCO3-	0.00E+00	0.00E+00	0.00E+00	3.26E-15	0.00E+00	0.00E+00	3.26E-15	1.48E-18	1.71E-17
H2CO3	0.00E+00	0.00E+00	0.00E+00	0.00E+00	0.00E+00	0.00E+00	0.00E+00	0.00E+00	0.00E+00
HF	0.00E+00	0.00E+00	0.00E+00	0.00E+00	2.17E-06	2.32E+01	2.32E+01	1.05E-02	1.22E-01
Hg^{+2}	0.00E+00	0.00E+00	0.00E+00	5.47E+00	0.00E+00	0.00E+00	5.47E+00	2.48E-03	2.88E-02
HNO_3	0.00E+00	0.00E+00	0.00E+00	0.00E+00	0.00E+00	0.00E+00	0.00E+00	0.00E+00	0.00E+00
K^+	0.00E+00	0.00E+00	0.00E+00	3.60E+01	0.00E+00	0.00E+00	3.60E+01	1.64E-02	1.89E-01
La^{+3}	0.00E+00	0.00E+00	0.00E+00	5.56E-03	0.00E+00	0.00E+00	5.56E-03	2.53E-06	2.92E-05
Li^+	0.00E+00	0.00E+00	0.00E+00	8.98E+00	0.00E+00	0.00E+00	8.98E+00	4.08E-03	4.72E-02
Mg^{+2}	0.00E+00	0.00E+00	0.00E+00	5.91E+00	0.00E+00	0.00E+00	5.91E+00	2.69E-03	3.11E-02
Mn^{+2}	0.00E+00	0.00E+00	0.00E+00	2.20E-01	0.00E+00	0.00E+00	2.20E-01	1.00E-04	1.16E-03
MnO_4^-	0.00E+00	0.00E+00	0.00E+00	0.00E+00	0.00E+00	0.00E+00	0.00E+00	0.00E+00	0.00E+00
N_2	0.00E+00	0.00E+00	0.00E+00	0.00E+00	4.12E-03	6.15E+04	6.15E+04	2.80E+01	3.24E+02
Na^+	0.00E+00	0.00E+00	0.00E+00	1.28E+02	0.00E+00	0.00E+00	1.28E+02	5.84E-02	6.76E-01
NH3	0.00E+00	0.00E+00	0.00E+00	0.00E+00	1.24E-06	1.12E+01	1.12E+01	5.09E-03	5.90E-02
NH4+	0.00E+00	0.00E+00	0.00E+00	1.44E-16	0.00E+00	0.00E+00	1.44E-16	6.55E-20	7.58E-19
Ni^{+2}	0.00E+00	0.00E+00	0.00E+00	2.00E-01	0.00E+00	0.00E+00	2.00E-01	9.10E-05	1.05E-03
NO	0.00E+00	0.00E+00	0.00E+00	0.00E+00	3.07E-04	4.91E+03	4.91E+03	2.23E+00	2.58E+01
NO_2	0.00E+00	0.00E+00	0.00E+00	0.00E+00	2.81E-05	6.87E+02	6.87E+02	3.12E-01	3.62E+00
NO_3	0.00E+00	0.00E+00	0.00E+00	0.00E+00	0.00E+00	0.00E+00	0.00E+00	0.00E+00	0.00E+00
NO_3	0.00E+00	0.00E+00	0.00E+00	0.00E+00	0.00E+00	0.00E+00	0.00E+00	0.00E+00	0.00E+00
O_2	0.00E+00	0.00E+00	0.00E+00	0.00E+00	1.50E-03	2.56E+04	2.56E+04	1.16E+01	1.35E+02
O^-	0.00E+00	0.00E+00	0.00E+00	3.92E+02	0.00E+00	0.00E+00	3.92E+02	1.78E-01	2.06E+00
OH^-	0.00E+00	0.00E+00	0.00E+00	0.00E+00	0.00E+00	0.00E+00	0.00E+00	0.00E+00	0.00E+00
OH(b)	0.00E+00	0.00E+00	0.00E+00	0.00E+00	0.00E+00	0.00E+00	0.00E+00	0.00E+00	0.00E+00
Pb^{+2}	0.00E+00	0.00E+00	0.00E+00	6.66E-02	0.00E+00	0.00E+00	6.66E-02	3.03E-05	3.50E-04
Pd^{+2}	0.00E+00	0.00E+00	0.00E+00	1.07E-03	0.00E+00	0.00E+00	1.07E-03	4.87E-07	5.64E-06
PO_4^{-3}	0.00E+00	0.00E+00	0.00E+00	5.62E+00	0.00E+00	0.00E+00	5.62E+00	2.55E-03	2.96E-02
Resin	0.00E+00	0.00E+00	0.00E+00	0.00E+00	0.00E+00	0.00E+00	0.00E+00	0.00E+00	0.00E+00
Rh^{+3}	0.00E+00	0.00E+00	0.00E+00	3.84E-03	0.00E+00	0.00E+00	3.84E-03	1.74E-06	2.02E-05
Ru^{+3}	0.00E+00	0.00E+00	0.00E+00	9.81E-02	0.00E+00	0.00E+00	9.81E-02	4.46E-05	5.16E-04
S^{-2}	0.00E+00	0.00E+00	0.00E+00	0.00E+00	0.00E+00	0.00E+00	0.00E+00	0.00E+00	0.00E+00
SiO2	0.00E+00	0.00E+00	0.00E+00	1.70E+02	0.00E+00	0.00E+00	1.70E+02	7.74E-02	8.95E-01
SiO_4^{-4}	0.00E+00	0.00E+00	0.00E+00	9.15E-14	0.00E+00	0.00E+00	9.15E-14	4.16E-17	4.81E-16
SO_3	0.00E+00	0.00E+00	0.00E+00	0.00E+00	5.20E-07	1.77E+01	1.77E+01	8.06E-03	9.33E-02
SO_4^{-2}	0.00E+00	0.00E+00	0.00E+00	0.00E+00	0.00E+00	0.00E+00	0.00E+00	0.00E+00	0.00E+00
Sr^{+2}	0.00E+00	0.00E+00	0.00E+00	9.26E-04	0.00E+00	0.00E+00	9.26E-04	4.21E-07	4.87E-06
Sucrose	0.00E+00	0.00E+00	0.00E+00	0.00E+00	0.00E+00	0.00E+00	0.00E+00	0.00E+00	0.00E+00
Tl^{+4}	0.00E+00	0.00E+00	0.00E+00	5.23E-01	0.00E+00	0.00E+00	5.23E-01	2.38E-04	2.75E-03
Zn^{+2}	0.00E+00	0.00E+00	0.00E+00	2.70E+01	0.00E+00	0.00E+00	2.70E+01	1.23E-02	1.42E-01
Zr^{+4}	0.00E+00	0.00E+00	0.00E+00	8.32E+00	0.00E+00	0.00E+00	8.32E+00	3.78E-03	4.38E-02

Components	Aqueous Comp			Solid Comp	Gaseous		Total Comp		
Unit	mol/L	Lb/gal	Lb/day	Lb/day	mol/L	Lb/day	Lb/day	Mt/day	g/sec
Total	0.00E+00	0.00E+00	0.00E+00	9.71E+02	0.00E+00	0.00E+00	9.71E+02	4.41E-01	5.11E+00

CALCULATION SHEET

BY: E. Berrios
DATE: 01/09/06

PROJECT: WTP
JOB. NO. 24590
CALC NO : 24590-WTP-M4C-FRP-00005
SHEET REV: C
SHEET NO : A-13

$C_2O_4^{2-}$	0.00E+00	0.00E+00	0.00E+00	9.71E+02	0.00E+00	0.00E+00	9.71E+02	4.41E-01	5.11E+00
Formate	0.00E+00	0.00E+00	0.00E+00	4.79E-11	0.00E+00	0.00E+00	4.79E-11	2.18E-14	2.52E-13
Acetate	0.00E+00	0.00E+00	0.00E+00	4.87E-11	0.00E+00	0.00E+00	4.87E-11	2.21E-14	2.56E-13
Glycolate	0.00E+00	0.00E+00	0.00E+00	4.12E-10	0.00E+00	0.00E+00	4.12E-10	1.87E-13	2.17E-12
IDA	0.00E+00	0.00E+00	0.00E+00	3.88E-10	0.00E+00	0.00E+00	3.88E-10	1.76E-13	2.04E-12
Citrate	0.00E+00	0.00E+00	0.00E+00	5.11E-11	0.00E+00	0.00E+00	5.11E-11	2.32E-14	2.68E-13
HEDTA	0.00E+00	0.00E+00	0.00E+00	3.47E-10	0.00E+00	0.00E+00	3.47E-10	1.58E-13	1.82E-12
EDTA	0.00E+00	0.00E+00	0.00E+00	4.38E-11	0.00E+00	0.00E+00	4.38E-11	1.99E-14	2.30E-13

Rad. Comp	Aqueous Rad. Comp			Solids Rad. Comp (1)			Total Rad. Comp (1)		
Unit	Ci/L	Ci/day	Lb/day	Ci/L	Ci/day	Lb/day	Ci/L	Ci/day	Lb/day
Total	0.00E+00	0.00E+00	0.00E+00	3.68E-07	8.90E+01	3.41E+00	3.68E-07	8.90E+01	3.41E+00
^{241}Am	0.00E+00	0.00E+00	0.00E+00	9.39E-10	2.27E-01	1.48E-04	9.39E-10	2.27E-01	1.48E-04
^{243}Am	0.00E+00	0.00E+00	0.00E+00	6.11E-13	1.48E-04	1.83E-06	6.11E-13	1.48E-04	1.83E-06
^{14}C	0.00E+00	0.00E+00	0.00E+00	1.51E-09	3.64E-01	1.80E-04	1.51E-09	3.64E-01	1.80E-04
^{60}Co	0.00E+00	0.00E+00	0.00E+00	4.99E-11	1.21E-02	2.35E-08	4.99E-11	1.21E-02	2.35E-08
^{243}Cm	0.00E+00	0.00E+00	0.00E+00	4.28E-14	1.03E-05	4.51E-10	4.28E-14	1.03E-05	4.51E-10
^{244}Cm	0.00E+00	0.00E+00	0.00E+00	1.01E-12	2.44E-04	6.65E-09	1.01E-12	2.44E-04	6.65E-09
^{137}Cs	0.00E+00	0.00E+00	0.00E+00	2.47E-08	5.98E+00	1.51E-04	2.47E-08	5.98E+00	1.51E-04
^{153}Eu	0.00E+00	0.00E+00	0.00E+00	2.80E-12	6.77E-04	8.58E-09	2.80E-12	6.77E-04	8.58E-09
^{154}Eu	0.00E+00	0.00E+00	0.00E+00	5.80E-10	1.40E-01	1.14E-06	5.80E-10	1.40E-01	1.14E-06
^{155}Eu	0.00E+00	0.00E+00	0.00E+00	1.67E-10	4.04E-02	1.84E-07	1.67E-10	4.04E-02	1.84E-07
^{3}H	0.00E+00	0.00E+00	0.00E+00	1.62E-09	3.92E-01	8.99E-08	1.62E-09	3.92E-01	8.99E-08
^{129}I	0.00E+00	0.00E+00	0.00E+00	4.91E-11	1.19E-02	1.48E-01	4.91E-11	1.19E-02	1.48E-01
^{63}Ni	0.00E+00	0.00E+00	0.00E+00	2.03E-09	4.89E-01	1.90E-05	2.03E-09	4.89E-01	1.90E-05
^{237}Np	0.00E+00	0.00E+00	0.00E+00	2.95E-13	7.12E-05	2.23E-04	2.95E-13	7.12E-05	2.23E-04
^{238}Pu	0.00E+00	0.00E+00	0.00E+00	1.67E-12	4.03E-04	5.19E-08	1.67E-12	4.03E-04	5.19E-08
^{239}Pu	0.00E+00	0.00E+00	0.00E+00	2.30E-11	5.56E-03	1.98E-04	2.30E-11	5.56E-03	1.98E-04
^{240}Pu	0.00E+00	0.00E+00	0.00E+00	5.97E-12	1.44E-03	1.40E-05	5.97E-12	1.44E-03	1.40E-05
^{241}Pu	0.00E+00	0.00E+00	0.00E+00	1.25E-10	3.03E-02	6.48E-07	1.25E-10	3.03E-02	6.48E-07
^{242}Pu	0.00E+00	0.00E+00	0.00E+00	6.31E-16	1.52E-07	8.54E-08	6.31E-16	1.52E-07	8.54E-08
^{125}Sb	0.00E+00	0.00E+00	0.00E+00	8.71E-10	2.10E-01	4.47E-07	8.71E-10	2.10E-01	4.47E-07
^{151}Sm	0.00E+00	0.00E+00	0.00E+00	7.06E-10	1.70E-01	1.43E-05	7.06E-10	1.70E-01	1.43E-05
^{126}Sn	0.00E+00	0.00E+00	0.00E+00	5.49E-12	1.33E-03	2.57E-04	5.49E-12	1.33E-03	2.57E-04
^{90}Sr	0.00E+00	0.00E+00	0.00E+00	2.41E-07	5.82E+01	9.29E-04	2.41E-07	5.82E+01	9.29E-04
^{99}Tc	0.00E+00	0.00E+00	0.00E+00	9.41E-08	2.27E+01	2.96E+00	9.41E-08	2.27E+01	2.96E+00
^{232}Th	0.00E+00	0.00E+00	0.00E+00	8.83E-15	2.13E-06	4.27E-02	8.83E-15	2.13E-06	4.27E-02
^{233}U	0.00E+00	0.00E+00	0.00E+00	3.01E-13	7.28E-05	1.67E-05	3.01E-13	7.28E-05	1.67E-05
^{234}U	0.00E+00	0.00E+00	0.00E+00	2.11E-13	5.10E-05	1.81E-05	2.11E-13	5.10E-05	1.81E-05
^{235}U	0.00E+00	0.00E+00	0.00E+00	8.31E-15	2.01E-06	2.05E-03	8.31E-15	2.01E-06	2.05E-03
^{236}U	0.00E+00	0.00E+00	0.00E+00	1.42E-14	3.44E-06	1.17E-04	1.42E-14	3.44E-06	1.17E-04
^{238}U	0.00E+00	0.00E+00	0.00E+00	1.65E-13	3.98E-05	2.81E-01	1.65E-13	3.98E-05	2.81E-01

(1) All radionuclides in gaseous streams are assumed to exist as solid particulate.

CAS Comp	Organic Components				
Unit	mol/L	Lb/gal	Lb/day	MV/day	g/sec
Total	8.70E-06	7.16E-06	4.57E-02	2.08E-01	2.40E+00
50-32-8	3.34E-08	7.02E-06	4.48E+00	2.04E-03	2.36E-02
56-23-5	0.00E+00	0.00E+00	0.00E+00	0.00E+00	0.00E+00
57-14-7	4.40E-10	2.21E-10	1.41E-02	6.40E-06	7.41E-05
58-90-2	2.47E-10	4.77E-10	3.05E-02	1.38E-05	1.60E-04
59-89-2	4.78E-17	4.63E-17	2.95E-09	1.34E-12	1.55E-11
60-35-5	3.58E-08	1.77E-08	1.13E+00	5.12E-04	5.93E-03
62-75-9	1.44E-08	8.92E-09	5.69E-01	2.59E-04	3.00E-03
64-19-7	3.33E-14	1.67E-14	1.06E-06	4.84E-10	5.60E-09
71-43-2	0.00E+00	0.00E+00	0.00E+00	0.00E+00	0.00E+00
75-05-8	7.57E-12	2.59E-12	1.65E-04	7.52E-08	8.70E-07
75-12-7	2.89E-07	1.09E-07	6.93E+00	3.15E-03	3.65E-02
76-15-3	0.00E+00	0.00E+00	0.00E+00	0.00E+00	0.00E+00
79-01-6	0.00E+00	0.00E+00	0.00E+00	0.00E+00	0.00E+00
83-32-9	5.68E-18	7.31E-18	4.66E-10	2.12E-13	2.45E-12
84-66-2	1.80E-08	3.34E-08	2.13E+00	9.69E-04	1.12E-02
84-74-2	5.85E-09	1.36E-08	8.68E-01	3.94E-04	4.56E-03
87-68-3	0.00E+00	0.00E+00	0.00E+00	0.00E+00	0.00E+00
88-89-1	5.71E-08	1.09E-07	6.97E+00	3.17E-03	3.67E-02
91-20-3	9.18E-18	9.82E-18	6.26E-10	2.85E-13	3.29E-12
95-50-1	0.00E+00	0.00E+00	0.00E+00	0.00E+00	0.00E+00
98-86-2	2.22E-10	2.23E-10	1.42E-02	6.48E-06	7.50E-05
100-21-0	8.90E-07	1.23E-06	7.87E+01	3.58E-02	4.14E-01
101-84-8	5.70E-19	8.09E-19	5.16E-11	2.35E-14	2.72E-13
106-93-4	8.40E-19	1.32E-18	8.40E-11	3.82E-14	4.42E-13
106-97-8	0.00E+00	0.00E+00	0.00E+00	0.00E+00	0.00E+00
106-99-0	0.00E+00	0.00E+00	0.00E+00	0.00E+00	0.00E+00
108-87-2	0.00E+00	0.00E+00	0.00E+00	0.00E+00	0.00E+00
108-88-3	0.00E+00	0.00E+00	0.00E+00	0.00E+00	0.00E+00
108-95-2	6.77E-08	5.32E-08	3.39E+00	1.54E-03	1.78E-02
110-54-3	0.00E+00	0.00E+00	0.00E+00	0.00E+00	0.00E+00
110-82-7	0.00E+00	0.00E+00	0.00E+00	0.00E+00	0.00E+00
111-84-2	0.00E+00	0.00E+00	0.00E+00	0.00E+00	0.00E+00
120-12-7	2.38E-12	3.54E-12	2.26E-04	1.03E-07	1.19E-06
120-82-1	4.00E-25	6.05E-25	3.86E-17	1.76E-20	2.03E-19
122-39-4	9.00E-10	1.27E-09	8.11E-02	3.68E-05	4.26E-04
126-73-8	2.42E-08	5.38E-08	3.43E+00	1.56E-03	1.81E-02
127-18-4	0.00E+00	0.00E+00	0.00E+00	0.00E+00	0.00E+00
129-00-0	1.87E-10	3.16E-10	2.02E-02	9.18E-06	1.06E-04
132-64-9	1.12E-14	1.57E-14	9.98E-07	4.54E-10	5.25E-09
144-62-7	7.26E-06	5.46E-06	3.48E+02	1.58E-01	1.83E+00
193-39-5	7.64E-16	1.76E-15	1.12E-07	5.11E-11	5.91E-10
206-44-0	2.25E-17	3.79E-17	2.42E-09	1.10E-12	1.27E-11
208-96-8	2.03E-13	2.58E-13	1.64E-05	7.46E-09	8.65E-08
603-34-9	6.48E-10	1.33E-09	8.47E-02	3.85E-05	4.46E-04
621-64-7	3.75E-17	4.06E-17	2.60E-09	1.18E-12	1.37E-11
1321-64-8	3.27E-18	8.21E-18	5.24E-10	2.38E-13	2.76E-12
1336-36-3	6.52E-17	1.75E-16	1.12E-08	5.08E-12	5.88E-11
3697-24-3	2.01E-17	4.07E-17	2.60E-09	1.18E-12	1.37E-11
4170-30-3	1.11E-10	6.51E-11	4.15E-03	1.89E-06	2.19E-05
10061-01-5	5.00E-26	4.63E-26	2.95E-18	1.34E-21	1.55E-20
26140-60-3	1.33E-17	2.56E-17	1.63E-09	7.41E-13	8.58E-12

Table A-7 LFP06 Stream Report

Stream Number: LFP06
Stream Name: LAW LFP Vents
Configuration: MRQ-05-0049.ecmf
Run Date / Time: 12/14/2005 - 1:42:25 PM
Run Date File: H:\ACM v8.1\MRQ-05-0049\MRQ_05_0049A_Streams.csv

Variable	Value	Units	
Density	1.14E-03	g/cm³	(does not include solid phase)
Enthalpy	-5.17E+04	BTU/hr	
Mass Flow	4.88E+02	Lb/hr	
	1.17E+04	Lb/day	
Volumetric Flow	8.52E+02	GPM	(does not include solid phase)
	1.14E+02	ft³/min	(does not include solid phase)
Molar Flow	1.71E+01	Lbmol/hr	
Molecular Weight	2.85E+01	Lb/Lbmol	
Pressure	1.00E+03	mbar	
Temperature	2.64E+01	C	
Na Molarity	0.00E+00	mol/L	
pH	4.51E+00	pH	
Total TRU	1.98E-13	Ci/L	
Total Activity	4.04E-11	Ci/L	

Component	Aqueous Comp			Solid Comp	Gaseous (1)		Total Comp		
Unit	mol/L	Lb/gal	Lb/day	Lb/day	mol/L	Lb/day	Lb/day	mt/day	g/sec
Total	1.90E-08	3.24E-09	3.98E-03	1.79E-03	4.02E-02	1.17E+04	1.17E+04	5.32E+00	6.19E+01
Ag^{+}	1.22E-14	1.10E-14	1.35E-08	4.72E-10	0.00E+00	0.00E+00	1.40E-08	6.35E-12	7.35E-11
Al^{+3}	1.48E-10	3.34E-11	4.09E-05	4.57E-05	0.00E+00	0.00E+00	8.66E-05	3.94E-08	4.56E-07
As^{+3}	5.39E-14	3.37E-14	4.13E-08	8.15E-09	0.00E+00	0.00E+00	4.95E-08	2.25E-11	2.60E-10
B^{+3}	5.83E-10	5.35E-11	6.57E-05	3.37E-06	0.00E+00	0.00E+00	6.90E-05	3.14E-08	3.63E-07
Ba^{+2}	1.12E-14	1.29E-14	1.58E-08	1.70E-10	0.00E+00	0.00E+00	1.60E-08	7.26E-12	8.40E-11
Bi^{+3}	1.33E-14	2.31E-14	2.84E-08	4.13E-10	0.00E+00	0.00E+00	2.88E-08	1.31E-11	1.51E-10
Ca^{+2}	1.67E-12	5.59E-13	6.86E-07	6.44E-05	0.00E+00	0.00E+00	6.50E-05	2.96E-08	3.42E-07
Cd^{+2}	2.09E-14	1.96E-14	2.41E-08	6.10E-09	0.00E+00	0.00E+00	3.02E-08	1.37E-11	1.58E-10
Ce^{+3}	4.99E-13	5.84E-13	7.16E-07	3.61E-08	0.00E+00	0.00E+00	7.20E-07	3.27E-10	3.79E-09
Cl^{-}	2.78E-11	8.23E-12	1.01E-05	1.59E-08	0.00E+00	0.00E+00	1.01E-05	4.60E-09	5.32E-08
CO	0.00E+00	0.00E+00	0.00E+00	0.00E+00	0.00E+00	0.00E+00	0.00E+00	0.00E+00	0.00E+00
CO_2	0.00E+00	0.00E+00	0.00E+00	0.00E+00	4.22E-33	1.90E-27	1.90E-27	8.65E-31	1.00E-29
CO_3^{-2}	1.19E-10	5.97E-11	7.32E-05	7.73E-05	0.00E+00	0.00E+00	1.51E-04	6.84E-08	7.92E-07
Cr^{+3}	3.58E-12	1.56E-12	1.91E-06	1.58E-07	0.00E+00	0.00E+00	2.07E-06	9.39E-10	1.09E-08
Cu^{+2}	2.07E-14	1.10E-14	1.34E-08	7.14E-11	0.00E+00	0.00E+00	1.35E-08	6.14E-12	7.11E-11
F^{-}	1.36E-11	2.15E-12	2.64E-06	2.45E-10	0.00E+00	0.00E+00	2.64E-06	1.20E-09	1.39E-08
Fe^{+3}	6.54E-13	3.05E-13	3.74E-07	9.11E-05	0.00E+00	0.00E+00	9.15E-05	4.16E-08	4.81E-07
H_2O	1.28E-08	1.93E-09	2.36E-03	0.00E+00	1.40E-03	2.58E+02	2.58E+02	1.17E-01	1.36E+00
$H_2O(b)$	0.00E+00	0.00E+00	0.00E+00	0.00E+00	0.00E+00	0.00E+00	0.00E+00	0.00E+00	0.00E+00
H^{+}	5.16E-23	4.34E-25	5.32E-19	0.00E+00	0.00E+00	0.00E+00	5.32E-19	2.42E-22	2.80E-21
HCL	0.00E+00	0.00E+00	0.00E+00	0.00E+00	0.00E+00	0.00E+00	0.00E+00	0.00E+00	0.00E+00
HCO3-	6.68E-34	3.40E-34	4.17E-28	9.78E-23	0.00E+00	0.00E+00	9.78E-23	4.45E-26	5.14E-25
H2CO3	0.00E+00	0.00E+00	0.00E+00	0.00E+00	0.00E+00	0.00E+00	0.00E+00	0.00E+00	0.00E+00
HF	0.00E+00	0.00E+00	0.00E+00	0.00E+00	0.00E+00	0.00E+00	0.00E+00	0.00E+00	0.00E+00
Hg^{+2}	2.16E-14	3.62E-14	4.44E-08	1.20E-07	0.00E+00	0.00E+00	1.64E-07	7.45E-11	8.63E-10
HNO_3	0.00E+00	0.00E+00	0.00E+00	0.00E+00	0.00E+00	0.00E+00	0.00E+00	0.00E+00	0.00E+00
K^{+}	5.32E-11	1.74E-11	2.13E-05	2.01E-07	0.00E+00	0.00E+00	2.15E-05	9.77E-09	1.13E-07
La^{+3}	5.73E-15	6.64E-15	8.15E-09	1.87E-10	0.00E+00	0.00E+00	8.34E-09	3.79E-12	4.39E-11
Li^{+}	2.43E-12	1.41E-13	1.73E-07	1.79E-05	0.00E+00	0.00E+00	1.81E-05	8.21E-09	9.50E-08
Mg^{+2}	1.70E-13	3.48E-14	4.24E-08	2.37E-05	0.00E+00	0.00E+00	2.37E-05	1.08E-08	1.25E-07
Mn^{+3}	1.85E-13	8.47E-14	1.04E-07	2.63E-07	0.00E+00	0.00E+00	3.67E-07	1.67E-10	1.93E-09
MnO_4^{-}	0.00E+00	0.00E+00	0.00E+00	0.00E+00	0.00E+00	0.00E+00	0.00E+00	0.00E+00	0.00E+00
N_2	3.66E-33	8.57E-34	1.05E-27	0.00E+00	3.08E-02	8.78E+03	8.78E+03	3.99E+00	4.62E+01
Na^{+}	1.64E-09	3.14E-10	3.85E-04	7.85E-08	0.00E+00	0.00E+00	3.85E-04	1.75E-07	2.03E-06
NH3	1.93E-13	2.74E-14	3.36E-08	0.00E+00	0.00E+00	0.00E+00	3.36E-08	1.53E-11	1.77E-10
NH4+	2.77E-32	2.74E-14	5.12E-27	4.32E-24	0.00E+00	0.00E+00	4.32E-24	1.96E-27	2.27E-26
Ni^{+2}	2.99E-13	1.46E-13	1.80E-07	2.39E-07	0.00E+00	0.00E+00	4.18E-07	1.90E-10	2.20E-09
NO	0.00E+00	0.00E+00	0.00E+00	0.00E+00	0.00E+00	0.00E+00	0.00E+00	0.00E+00	0.00E+00
NO_2	0.00E+00	0.00E+00	0.00E+00	0.00E+00	0.00E+00	0.00E+00	0.00E+00	0.00E+00	0.00E+00
NO_2^{-}	3.22E-10	1.24E-10	1.52E-04	6.82E-10	0.00E+00	0.00E+00	1.52E-04	6.89E-08	7.98E-07
NO_3^{-}	5.88E-10	3.04E-10	3.73E-04	5.25E-10	0.00E+00	0.00E+00	3.73E-04	1.70E-07	1.96E-06
O_2	1.94E-35	5.16E-36	6.36E-30	0.00E+00	8.14E-03	2.67E+03	2.67E+03	1.21E+00	1.40E+01
O^{-}	0.00E+00	0.00E+00	0.00E+00	3.18E-04	0.00E+00	0.00E+00	3.18E-04	1.45E-07	1.67E-06
OH^{-}	3.20E-10	4.55E-11	5.58E-05	2.07E-09	0.00E+00	0.00E+00	5.58E-05	2.54E-08	2.93E-07
$OH(b)^{-}$	2.37E-09	3.38E-10	4.13E-04	0.00E+00	0.00E+00	0.00E+00	4.13E-04	1.88E-07	2.17E-06
Pb^{+2}	7.58E-14	1.31E-13	1.61E-07	2.69E-09	0.00E+00	0.00E+00	1.64E-07	7.43E-11	8.60E-10
Pd^{+2}	5.87E-15	5.21E-15	6.40E-09	3.61E-11	0.00E+00	0.00E+00	6.43E-09	2.92E-12	3.38E-11
PO_4^{-3}	6.05E-12	4.79E-12	5.88E-06	6.26E-07	0.00E+00	0.00E+00	6.51E-06	2.96E-09	3.42E-08
Resin	0.00E+00	0.00E+00	0.00E+00	0.00E+00	0.00E+00	0.00E+00	0.00E+00	0.00E+00	0.00E+00
Rh^{+3}	5.68E-15	4.88E-15	5.98E-09	1.18E-10	0.00E+00	0.00E+00	6.10E-09	2.77E-12	3.21E-11
Ru^{+3}	8.44E-15	7.12E-15	8.73E-09	2.75E-09	0.00E+00	0.00E+00	1.15E-08	5.22E-12	6.04E-11
S^{-2}	0.00E+00	0.00E+00	0.00E+00	3.12E-23	0.00E+00	0.00E+00	3.12E-23	1.42E-26	1.64E-25
SiO2	1.14E-12	5.73E-13	7.03E-07	1.02E-03	0.00E+00	0.00E+00	1.02E-03	4.65E-07	5.38E-06
SiO_4^{-4}	5.73E-25	5.71E-25	6.23E-19	0.00E+00	0.00E+00	0.00E+00	6.23E-19	3.74E-22	4.33E-21
SO_2	0.00E+00	0.00E+00	0.00E+00	0.00E+00	0.00E+00	0.00E+00	0.00E+00	0.00E+00	0.00E+00
SO_4^{-2}	1.44E-11	1.16E-11	1.42E-05	2.66E-07	0.00E+00	0.00E+00	1.45E-05	6.58E-09	7.62E-08
Sr^{+2}	3.07E-15	2.25E-15	2.76E-09	2.04E-11	0.00E+00	0.00E+00	2.78E-09	1.26E-12	1.46E-11
Sucrose	0.00E+00	0.00E+00	0.00E+00	0.00E+00	0.00E+00	0.00E+00	0.00E+00	0.00E+00	0.00E+00
Tl^{+4}	9.42E-15	3.78E-15	4.62E-09	1.94E-05	0.00E+00	0.00E+00	1.94E-05	8.80E-09	1.02E-07
Zn^{+2}	3.52E-14	1.92E-14	2.36E-08	5.43E-05	0.00E+00	0.00E+00	5.44E-05	2.47E-09	2.86E-07
Zr^{+4}	2.60E-14	1.98E-14	2.43E-08	5.00E-05	0.00E+00	0.00E+00	5.00E-05	2.27E-08	2.63E-07

Components	Aqueous Comp			Solid Comp	Gaseous		Total Comp		
Unit	mol/L	Lb/gal	Lb/day	Lb/day	mol/L	Lb/day	Lb/day	Mt/day	g/sec
Total	5.46E-12	4.01E-12	4.92E-06	2.71E-05	0.00E+00	0.00E+00	3.20E-05	1.46E-08	1.69E-07

$C_2O_4^{-2}$	5.46E-12	4.01E-12	4.92E-06	2.71E-05	0.00E+00	0.00E+00	3.20E-05	1.46E-08	1.89E-07
Formate	3.43E-24	1.29E-24	1.58E-18	0.00E+00	0.00E+00	0.00E+00	1.58E-18	7.19E-22	8.32E-21
Acetate	2.66E-24	1.31E-24	1.61E-18	0.00E+00	0.00E+00	0.00E+00	1.61E-18	7.31E-22	8.46E-21
Glycolate	1.77E-23	1.11E-23	1.36E-17	0.00E+00	0.00E+00	0.00E+00	1.36E-17	6.18E-21	7.15E-20
IDA	9.38E-24	1.04E-23	1.28E-17	0.00E+00	0.00E+00	0.00E+00	1.28E-17	5.81E-21	6.73E-20
Citrate	8.58E-25	1.38E-24	1.69E-18	0.00E+00	0.00E+00	0.00E+00	1.69E-18	7.67E-22	8.88E-21
HEDTA	4.02E-24	9.33E-24	1.14E-17	0.00E+00	0.00E+00	0.00E+00	1.14E-17	5.20E-21	6.02E-20
EDTA	4.63E-25	1.18E-24	1.44E-18	0.00E+00	0.00E+00	0.00E+00	1.44E-18	6.56E-22	7.60E-21

Rad. Comp	Aqueous Rad. Comp			Solids Rad. Comp (1)			Total Rad. Comp (1)		
Unit	Ci/L	Ci/day	Lb/day	Ci/L	Ci/day	Lb/day	Ci/L	Ci/day	Lb/day
Total	4.00E-11	1.86E-04	2.02E-06	4.72E-13	2.19E-06	1.40E-07	4.04E-11	1.88E-04	2.16E-06
^{241}Am	1.15E-13	5.35E-07	3.44E-10	2.10E-15	9.75E-09	6.27E-12	1.17E-13	5.44E-07	3.50E-10
^{243}Am	7.52E-17	3.49E-10	3.86E-12	1.00E-18	4.65E-12	5.14E-14	7.62E-17	3.54E-10	3.91E-12
^{14}C	2.35E-15	1.09E-08	5.39E-12	4.49E-20	2.08E-13	1.03E-16	2.35E-15	1.09E-08	5.39E-12
^{60}Co	1.54E-14	7.15E-08	1.40E-13	1.47E-18	6.82E-10	1.33E-15	1.56E-14	7.23E-08	1.41E-13
^{243}Cm	1.24E-17	5.78E-11	2.51E-15	9.56E-19	4.44E-12	1.94E-16	1.34E-17	6.21E-11	2.71E-15
^{244}Cm	2.94E-16	1.36E-09	3.72E-14	2.18E-17	1.01E-10	2.76E-15	3.15E-16	1.46E-09	3.99E-14
^{137}Cs	2.49E-14	1.16E-07	2.93E-12	5.22E-14	2.42E-07	6.15E-12	7.71E-14	3.58E-07	9.09E-12
^{152}Eu	8.66E-16	4.02E-09	5.10E-14	7.75E-18	3.60E-11	4.56E-16	8.74E-16	4.06E-09	5.15E-14
^{154}Eu	1.80E-13	8.34E-07	6.80E-12	1.27E-15	5.89E-09	4.81E-14	1.81E-13	8.40E-07	6.85E-12
^{155}Eu	5.19E-14	2.41E-07	1.09E-12	3.15E-16	1.46E-09	6.64E-15	5.22E-14	2.43E-07	1.10E-12
^{3}H	1.71E-15	7.93E-09	1.62E-15	8.22E-16	3.82E-09	8.78E-16	2.53E-15	1.18E-08	2.70E-15
^{129}I	7.15E-17	3.32E-10	4.15E-09	1.27E-17	5.92E-11	7.39E-10	8.43E-17	3.91E-10	4.89E-09
^{93}Nb	2.78E-13	1.29E-06	5.01E-11	3.13E-15	1.45E-08	5.65E-13	2.81E-13	1.31E-06	5.07E-11
^{237}Np	9.11E-17	4.23E-10	1.32E-09	9.79E-19	4.55E-12	1.42E-11	9.20E-17	4.27E-10	1.34E-09
^{238}Pu	5.15E-16	2.39E-09	3.08E-13	5.07E-18	2.35E-11	3.03E-15	5.20E-16	2.42E-09	3.11E-13
^{239}Pu	7.12E-15	3.31E-08	1.18E-09	5.77E-17	2.68E-10	9.53E-12	7.18E-15	3.34E-08	1.19E-09
^{240}Pu	1.85E-15	8.59E-09	8.33E-11	1.51E-17	7.00E-11	6.80E-13	1.86E-15	8.65E-09	8.40E-11
^{241}Pu	3.88E-14	1.80E-07	3.65E-12	3.50E-18	1.63E-09	3.48E-14	3.91E-14	1.82E-07	3.69E-12
^{242}Pu	1.95E-19	9.08E-13	5.08E-13	1.52E-21	7.04E-15	3.94E-15	1.97E-19	9.15E-13	5.12E-13
^{125}Sb	1.07E-13	4.97E-07	1.06E-12	1.55E-15	7.21E-09	1.53E-14	1.09E-13	5.05E-07	1.07E-12
^{151}Sm	1.50E-12	6.99E-06	5.85E-10	3.83E-15	1.78E-08	1.49E-12	1.51E-12	7.01E-06	5.87E-10
^{126}Sn	1.70E-15	7.91E-09	1.54E-09	9.60E-18	4.46E-11	8.85E-12	1.71E-15	7.96E-09	1.54E-09
^{90}Sr	3.73E-11	1.73E-04	2.77E-09	2.61E-13	1.21E-06	1.94E-11	3.76E-11	1.75E-04	2.79E-09
^{99}Tc	2.96E-13	1.37E-06	1.79E-07	1.45E-13	6.72E-07	8.74E-08	4.41E-13	2.05E-06	2.66E-07
^{232}Th	2.77E-18	1.28E-11	2.57E-07	4.62E-19	2.14E-12	4.30E-08	3.23E-18	1.50E-11	3.00E-07
^{233}U	9.22E-17	4.28E-10	9.80E-11	1.88E-18	8.72E-12	2.00E-12	9.41E-17	4.37E-10	1.00E-10
^{234}U	6.54E-17	3.04E-10	1.06E-10	4.01E-19	1.86E-12	6.62E-13	6.58E-17	3.06E-10	1.09E-10
^{235}U	2.58E-18	1.20E-11	1.22E-08	1.47E-20	6.81E-14	6.95E-11	2.59E-18	1.20E-11	1.23E-08
^{236}U	4.42E-18	2.05E-11	6.99E-10	2.46E-20	1.14E-13	3.89E-12	4.44E-18	2.06E-11	7.03E-10
^{238}U	5.11E-17	2.37E-10	1.56E-06	2.98E-19	1.38E-12	9.07E-06	5.14E-17	2.39E-10	1.57E-06

(1) All radionuclides in gaseous streams are assumed to exist as solid particulate.

CAS Comp	Organic Components				
Unit	mol/L	Lb/gal	Lb/day	Mol/day	g/sec
Total	2.31E-08	3.02E-08	3.70E-02	1.88E-05	1.95E-04
50-32-8	3.15E-08	6.64E-09	8.15E-03	3.70E-06	4.29E-05
56-23-5	0.00E+00	0.00E+00	0.00E+00	0.00E+00	0.00E+00
57-14-7	1.14E-09	5.74E-10	7.04E-04	3.20E-07	3.70E-06
58-90-2	4.54E-10	8.79E-10	1.08E-03	4.90E-07	5.68E-06
59-89-2	2.04E-14	1.97E-14	2.42E-08	1.10E-11	1.27E-10
60-35-5	8.27E-11	4.08E-11	5.00E-05	2.27E-08	2.63E-07
62-75-9	5.43E-09	3.36E-09	4.12E-03	1.87E-06	2.17E-05
64-19-7	1.42E-11	7.11E-12	8.72E-06	3.98E-09	4.59E-08
71-43-2	0.00E+00	0.00E+00	0.00E+00	0.00E+00	0.00E+00
75-05-8	5.56E-11	1.90E-11	2.34E-05	1.08E-08	1.23E-07
75-12-7	8.32E-11	3.13E-11	3.84E-05	1.74E-08	2.02E-07
78-15-3	0.00E+00	0.00E+00	0.00E+00	0.00E+00	0.00E+00
79-01-6	0.00E+00	0.00E+00	0.00E+00	0.00E+00	0.00E+00
83-32-9	2.42E-15	3.11E-15	3.82E-09	1.74E-12	2.01E-11
84-66-2	2.28E-09	4.22E-09	5.18E-03	2.35E-06	2.72E-05
84-74-2	2.19E-09	5.09E-09	6.24E-03	2.84E-06	3.28E-05
87-68-3	0.00E+00	0.00E+00	0.00E+00	0.00E+00	0.00E+00
88-89-1	2.01E-13	3.84E-13	4.71E-07	2.14E-10	2.48E-09
91-20-3	1.20E-15	1.28E-15	1.57E-09	7.13E-13	8.25E-12
95-50-1	1.24E-17	1.52E-17	1.86E-11	8.46E-15	9.78E-14
98-95-2	4.80E-10	4.83E-10	5.93E-04	2.68E-07	3.12E-06
100-21-0	7.14E-14	9.90E-14	1.21E-07	5.52E-11	6.39E-10
101-84-8	2.43E-16	3.45E-16	4.23E-10	1.92E-13	2.22E-12
106-93-4	1.95E-16	3.06E-16	3.76E-10	1.71E-13	1.98E-12
106-97-8	0.00E+00	0.00E+00	0.00E+00	0.00E+00	0.00E+00
108-99-0	0.00E+00	0.00E+00	0.00E+00	0.00E+00	0.00E+00
108-67-2	0.00E+00	0.00E+00	0.00E+00	0.00E+00	0.00E+00
108-88-3	0.00E+00	0.00E+00	0.00E+00	0.00E+00	0.00E+00
108-95-2	4.66E-09	3.68E-09	4.49E-03	2.04E-06	2.36E-05
110-54-3	0.00E+00	0.00E+00	0.00E+00	0.00E+00	0.00E+00
110-82-7	0.00E+00	0.00E+00	0.00E+00	0.00E+00	0.00E+00
111-84-2	0.00E+00	0.00E+00	0.00E+00	0.00E+00	0.00E+00
120-12-7	2.87E-11	4.27E-11	5.24E-05	2.38E-08	2.76E-07
120-82-1	5.22E-18	7.90E-18	9.70E-12	4.41E-15	5.10E-14
122-39-4	6.32E-10	8.92E-10	1.09E-03	4.96E-07	5.76E-06
126-73-8	7.51E-10	1.67E-09	2.05E-03	9.31E-07	1.08E-05
127-18-4	0.00E+00	0.00E+00	0.00E+00	0.00E+00	0.00E+00
129-00-0	4.86E-10	7.90E-10	9.69E-04	4.41E-07	5.10E-06
132-64-9	5.89E-13	8.27E-13	1.01E-06	4.61E-10	5.33E-09
144-62-7	2.15E-10	1.62E-10	1.98E-04	9.01E-08	1.04E-06
193-39-5	3.25E-13	7.50E-13	9.20E-07	4.18E-10	4.84E-09
206-44-0	9.57E-15	1.81E-14	1.98E-08	9.00E-12	1.04E-10
208-96-8	5.25E-12	6.87E-12	8.19E-06	3.72E-09	4.31E-08
603-34-9	7.29E-10	1.49E-09	1.83E-03	8.32E-07	9.63E-06
621-64-7	1.60E-14	1.74E-14	2.13E-08	9.69E-12	1.12E-10
1321-64-8	1.39E-15	3.50E-15	4.29E-09	1.95E-12	2.26E-11
1336-36-3	7.84E-15	2.11E-14	2.58E-08	1.17E-11	1.36E-10
3697-24-3	8.57E-15	1.73E-14	2.13E-08	9.67E-12	1.12E-10
4170-30-3	2.25E-10	1.32E-10	1.61E-04	7.34E-08	8.49E-07
10061-01-5	2.93E-20	2.71E-20	3.33E-14	1.51E-17	1.75E-16
26140-60-3	5.66E-15	1.09E-14	1.34E-08	6.07E-12	7.03E-11

BY: E. Berrios
DATE 01/09/06

Table A-8 RLD32 Stream Report

Stream Number: RLD32
Stream Name: LAW SBS condensate vessel vent
Configuration: MRQ-05-0049.acmf
Run Date / Time: 12/14/2005 - 1:42:25 PM
Run Date File: H:\ACM v3.1\MRQ-05-0049\MRQ_05_0049A_Streams.csv

Variable	Value	Units	
Density	1.13E-03	g/cm³	(does not include solid phase)
Enthalpy	-6.80E+03	BTU/hr	
Mass Flow	4.42E+01	Lb/hr	
	1.06E+03	Lb/day	
Volumetric Flow	7.83E+01	GPM	(does not include solid phase)
	1.05E+01	ft³/min	(does not include solid phase)
Molar Flow	1.56E+00	Lbmol/hr	
Molecular Weight	2.84E+01	Lb/Lbmol	
Pressure	1.00E+03	mbar	
Temperature	3.00E+01	C	
Na Molarity	0.00E+00	mol/L	
pH	3.75E+00	pH	
Total TRU	8.19E-15	Ci/L	
Total Activity	2.08E-12	Ci/L	

Component	Aqueous Comp			Solid Comp	Gaseous (1)		Total Comp		
Unit	mol/L	Lb/gal	Lb/day	Lb/day	mol/L	Lb/day	Lb/day	mt/day	g/sec
Total	5.25E-08	7.90E-09	8.91E-04	7.57E-06	3.97E-02	1.06E+03	1.06E+03	4.82E-01	5.58E+00
Ag^+	0.00E+00	0.00E+00	0.00E+00	1.54E-10	0.00E+00	0.00E+00	1.54E-10	6.98E-14	8.06E-13
Al^{+3}	0.00E+00	0.00E+00	0.00E+00	3.62E-07	0.00E+00	0.00E+00	3.62E-07	1.65E-10	1.91E-09
As^{+3}	0.00E+00	0.00E+00	0.00E+00	2.72E-09	0.00E+00	0.00E+00	2.72E-09	1.24E-12	1.43E-11
B^{+3}	0.00E+00	0.00E+00	0.00E+00	1.12E-08	0.00E+00	0.00E+00	1.12E-08	5.11E-10	5.92E-09
Ba^{+2}	0.00E+00	0.00E+00	0.00E+00	5.32E-11	0.00E+00	0.00E+00	5.32E-11	2.42E-14	2.80E-13
Bi^{+3}	0.00E+00	0.00E+00	0.00E+00	1.18E-10	0.00E+00	0.00E+00	1.18E-10	5.38E-14	6.23E-13
Ca^{+2}	3.25E-12	1.09E-12	1.23E-07	3.06E-07	0.00E+00	0.00E+00	4.28E-07	1.95E-10	2.25E-09
Cd^{+2}	0.00E+00	0.00E+00	0.00E+00	1.05E-09	0.00E+00	0.00E+00	1.05E-09	4.75E-13	5.50E-12
Ce^{+3}	0.00E+00	0.00E+00	0.00E+00	1.20E-09	0.00E+00	0.00E+00	1.20E-09	5.45E-13	6.31E-12
Cl^-	1.23E-11	3.83E-12	4.10E-07	0.00E+00	0.00E+00	0.00E+00	4.10E-07	1.86E-10	2.16E-09
CO	0.00E+00	0.00E+00	0.00E+00	0.00E+00	0.00E+00	0.00E+00	0.00E+00	0.00E+00	0.00E+00
CO_2	1.32E-14	4.85E-15	5.47E-10	0.00E+00	1.19E-27	4.92E-23	5.47E-10	2.48E-13	2.88E-12
CO_3^{-2}	2.88E-12	1.48E-12	1.68E-07	0.00E+00	0.00E+00	0.00E+00	1.68E-07	7.64E-11	8.85E-10
Cr^{+3}	0.00E+00	0.00E+00	0.00E+00	1.68E-08	0.00E+00	0.00E+00	1.68E-08	7.68E-12	8.88E-11
Cu^{+2}	0.00E+00	0.00E+00	0.00E+00	2.23E-11	0.00E+00	0.00E+00	2.23E-11	1.01E-14	1.17E-13
F^-	6.91E-12	1.09E-12	1.23E-07	0.00E+00	0.00E+00	0.00E+00	1.23E-07	5.61E-11	6.50E-10
Fe^{+3}	0.00E+00	0.00E+00	0.00E+00	2.27E-07	0.00E+00	0.00E+00	2.27E-07	1.03E-10	1.20E-09
H_2O	5.23E-08	7.87E-09	8.87E-04	0.00E+00	1.69E-03	2.87E+01	2.87E+01	1.30E-02	1.51E-01
$H_2O(b)$	0.00E+00	0.00E+00	0.00E+00	0.00E+00	0.00E+00	0.00E+00	0.00E+00	0.00E+00	0.00E+00
H^+	1.78E-22	1.50E-24	1.69E-19	0.00E+00	0.00E+00	0.00E+00	1.69E-19	7.68E-23	8.89E-22
HCL	0.00E+00	0.00E+00	0.00E+00	0.00E+00	0.00E+00	0.00E+00	0.00E+00	0.00E+00	0.00E+00
HCO3-	0.00E+00	0.00E+00	0.00E+00	3.25E-23	0.00E+00	0.00E+00	3.25E-23	1.48E-26	1.71E-25
H2CO3	0.00E+00	0.00E+00	0.00E+00	0.00E+00	0.00E+00	0.00E+00	0.00E+00	0.00E+00	0.00E+00
HF	0.00E+00	0.00E+00	0.00E+00	0.00E+00	0.00E+00	0.00E+00	0.00E+00	0.00E+00	0.00E+00
Hg^{+2}	0.00E+00	0.00E+00	0.00E+00	3.99E-08	0.00E+00	0.00E+00	3.99E-08	1.81E-11	2.10E-10
HNO_3	0.00E+00	0.00E+00	0.00E+00	0.00E+00	0.00E+00	0.00E+00	0.00E+00	0.00E+00	0.00E+00
K^+	9.89E-12	3.16E-12	3.56E-07	0.00E+00	0.00E+00	0.00E+00	3.56E-07	1.62E-10	1.88E-09
La^{+3}	0.00E+00	0.00E+00	0.00E+00	5.56E-11	0.00E+00	0.00E+00	5.56E-11	2.53E-14	2.92E-13
Li^+	7.20E-12	4.17E-13	4.70E-08	4.17E-08	0.00E+00	0.00E+00	8.87E-08	4.03E-11	4.67E-10
Mg^{+2}	0.00E+00	0.00E+00	0.00E+00	5.75E-08	0.00E+00	0.00E+00	5.75E-08	2.61E-11	3.02E-10
Mn^{+3}	0.00E+00	0.00E+00	0.00E+00	2.20E-09	0.00E+00	0.00E+00	2.20E-09	9.98E-13	1.16E-11
MnO_4	0.00E+00	0.00E+00	0.00E+00	0.00E+00	0.00E+00	0.00E+00	0.00E+00	0.00E+00	0.00E+00
N_2	0.00E+00	0.00E+00	0.00E+00	0.00E+00	3.00E-02	7.91E+02	7.91E+02	3.60E-01	4.16E+00
Na^+	5.86E-11	1.12E-11	1.27E-06	0.00E+00	0.00E+00	0.00E+00	1.27E-06	5.77E-10	6.67E-09
NH3	5.24E-12	7.45E-13	8.40E-08	0.00E+00	0.00E+00	0.00E+00	8.40E-08	3.82E-11	4.42E-10
NH4+	1.78E-15	7.45E-13	2.99E-11	1.43E-24	0.00E+00	0.00E+00	2.99E-11	1.36E-14	1.57E-13
Ni^{+2}	0.00E+00	0.00E+00	0.00E+00	1.98E-09	0.00E+00	0.00E+00	1.98E-09	8.99E-13	1.04E-11
NO	0.00E+00	0.00E+00	0.00E+00	0.00E+00	0.00E+00	0.00E+00	0.00E+00	0.00E+00	0.00E+00
NO_1	0.00E+00	0.00E+00	0.00E+00	0.00E+00	0.00E+00	0.00E+00	0.00E+00	0.00E+00	0.00E+00
NO_2	0.00E+00	0.00E+00	0.00E+00	0.00E+00	0.00E+00	0.00E+00	0.00E+00	0.00E+00	0.00E+00
NO_3	0.00E+00	0.00E+00	0.00E+00	0.00E+00	0.00E+00	0.00E+00	0.00E+00	0.00E+00	0.00E+00
O_2	0.00E+00	0.00E+00	0.00E+00	0.00E+00	7.98E-03	2.40E+02	2.40E+02	1.09E-01	1.26E+00
O^-	0.00E+00	0.00E+00	0.00E+00	3.28E-08	0.00E+00	0.00E+00	3.28E-08	1.49E-08	1.72E-08
OH^-	5.69E-11	8.07E-12	9.10E-07	0.00E+00	0.00E+00	0.00E+00	9.10E-07	4.14E-10	4.79E-09
OH(b)	0.00E+00	0.00E+00	0.00E+00	0.00E+00	0.00E+00	0.00E+00	0.00E+00	0.00E+00	0.00E+00
Pb^{+2}	0.00E+00	0.00E+00	0.00E+00	6.58E-10	0.00E+00	0.00E+00	6.58E-10	2.99E-13	3.46E-12
Pd^{+2}	0.00E+00	0.00E+00	0.00E+00	1.07E-11	0.00E+00	0.00E+00	1.07E-11	4.87E-15	5.64E-14
PO_4^{-3}	0.00E+00	0.00E+00	0.00E+00	5.45E-08	0.00E+00	0.00E+00	5.45E-08	2.48E-11	2.87E-10
Resin	0.00E+00	0.00E+00	0.00E+00	0.00E+00	0.00E+00	0.00E+00	0.00E+00	0.00E+00	0.00E+00
Rh^{+3}	0.00E+00	0.00E+00	0.00E+00	3.83E-11	0.00E+00	0.00E+00	3.83E-11	1.74E-14	2.02E-13
Ru^{+2}	0.00E+00	0.00E+00	0.00E+00	9.13E-10	0.00E+00	0.00E+00	9.13E-10	4.15E-13	4.80E-12
S^{-2}	0.00E+00	0.00E+00	0.00E+00	0.00E+00	0.00E+00	0.00E+00	0.00E+00	0.00E+00	0.00E+00
SiO2	0.00E+00	0.00E+00	0.00E+00	1.70E-08	0.00E+00	0.00E+00	1.70E-08	7.71E-10	8.93E-09
SiO_4^{-4}	0.00E+00	0.00E+00	0.00E+00	9.12E-22	0.00E+00	0.00E+00	9.12E-22	4.15E-25	4.80E-24
SO_2	0.00E+00	0.00E+00	0.00E+00	0.00E+00	0.00E+00	0.00E+00	0.00E+00	0.00E+00	0.00E+00
SO_4^{-2}	0.00E+00	0.00E+00	0.00E+00	0.00E+00	0.00E+00	0.00E+00	0.00E+00	0.00E+00	0.00E+00
Sr^{+2}	5.47E-17	4.00E-17	4.51E-12	4.72E-12	0.00E+00	0.00E+00	9.24E-12	4.20E-15	4.86E-14
Sucrose	0.00E+00	0.00E+00	0.00E+00	0.00E+00	0.00E+00	0.00E+00	0.00E+00	0.00E+00	0.00E+00
Tl^{+4}	0.00E+00	0.00E+00	0.00E+00	5.23E-09	0.00E+00	0.00E+00	5.23E-09	2.38E-12	2.75E-11
Zn^{+2}	0.00E+00	0.00E+00	0.00E+00	2.89E-07	0.00E+00	0.00E+00	2.89E-07	1.22E-10	1.42E-09
Zr^{+4}	0.00E+00	0.00E+00	0.00E+00	8.27E-08	0.00E+00	0.00E+00	8.27E-08	3.76E-11	4.35E-10

Components	Aqueous Comp			Solid Comp	Gaseous		Total Comp		
Unit	mol/L	Lb/gal	Lb/day	Lb/day	mol/L	Lb/day	Lb/day	Mt/day	g/sec
Total	0.00E+00	0.00E+00	0.00E+00	9.68E-06	0.00E+00	0.00E+00	9.68E-06	4.40E-09	5.09E-08

CALCULATION SHEET

BY: E Berrios
DATE: 01/09/06

PROJECT: WTP
JOB. NO.: 24590
CALC NO.: 24590-WTP-MMC-FRP-00005
SHEET REV: C
SHEET NO. A-17

$C_2O_4^{-2}$	0.00E+00	0.00E+00	0.00E+00	9.88E-06	0.00E+00	0.00E+00	9.88E-06	4.40E-09	5.09E-06
Formate	0.00E+00	0.00E+00	0.00E+00	0.00E+00	0.00E+00	0.00E+00	0.00E+00	0.00E+00	0.00E+00
Acetate	0.00E+00	0.00E+00	0.00E+00	0.00E+00	0.00E+00	0.00E+00	0.00E+00	0.00E+00	0.00E+00
Glycolate	0.00E+00	0.00E+00	0.00E+00	0.00E+00	0.00E+00	0.00E+00	0.00E+00	0.00E+00	0.00E+00
IDA	0.00E+00	0.00E+00	0.00E+00	0.00E+00	0.00E+00	0.00E+00	0.00E+00	0.00E+00	0.00E+00
Citrate	0.00E+00	0.00E+00	0.00E+00	0.00E+00	0.00E+00	0.00E+00	0.00E+00	0.00E+00	0.00E+00
HEDTA	0.00E+00	0.00E+00	0.00E+00	0.00E+00	0.00E+00	0.00E+00	0.00E+00	0.00E+00	0.00E+00
EDTA	0.00E+00	0.00E+00	0.00E+00	0.00E+00	0.00E+00	0.00E+00	0.00E+00	0.00E+00	0.00E+00

Rad. Comp	Aqueous Rad. Comp			Solids Rad. Comp (1)			Total Rad. Comp (1)		
Unit	Ci/L	Ci/day	Lb/day	Ci/L	Ci/day	Lb/day	Ci/L	Ci/day	Lb/day
Total	6.65E-13	2.84E-07	4.53E-12	1.40E-12	5.98E-07	3.24E-08	2.06E-12	8.80E-07	3.24E-08
^{241}Am	0.00E+00	0.00E+00	0.00E+00	5.30E-15	2.26E-09	1.46E-12	5.30E-15	2.26E-09	1.46E-12
^{243}Am	0.00E+00	0.00E+00	0.00E+00	3.45E-18	1.47E-12	1.83E-14	3.45E-18	1.47E-12	1.83E-14
^{14}C	0.00E+00	0.00E+00	0.00E+00	0.00E+00	0.00E+00	0.00E+00	0.00E+00	0.00E+00	0.00E+00
^{60}Co	0.00E+00	0.00E+00	0.00E+00	2.78E-16	1.19E-10	2.31E-16	2.78E-16	1.19E-10	2.31E-16
^{243}Cm	0.00E+00	0.00E+00	0.00E+00	2.42E-19	1.03E-13	4.50E-18	2.42E-19	1.03E-13	4.50E-18
^{244}Cm	0.00E+00	0.00E+00	0.00E+00	5.71E-18	2.44E-12	8.84E-17	5.71E-18	2.44E-12	8.84E-17
^{137}Cs	0.00E+00	0.00E+00	0.00E+00	1.38E-13	5.88E-08	1.49E-12	1.38E-13	5.88E-08	1.49E-12
^{152}Eu	0.00E+00	0.00E+00	0.00E+00	1.58E-17	6.75E-12	8.56E-17	1.58E-17	6.75E-12	8.56E-17
^{154}Eu	0.00E+00	0.00E+00	0.00E+00	3.27E-15	1.40E-09	1.14E-14	3.27E-15	1.40E-09	1.14E-14
^{155}Eu	0.00E+00	0.00E+00	0.00E+00	9.45E-18	4.03E-10	1.83E-15	9.45E-18	4.03E-10	1.83E-15
^{3}H	0.00E+00	0.00E+00	0.00E+00	7.43E-15	3.17E-09	7.27E-18	7.43E-15	3.17E-09	7.27E-18
^{129}I	0.00E+00	0.00E+00	0.00E+00	4.63E-17	1.98E-11	2.47E-10	4.63E-17	1.98E-11	2.47E-10
^{93}Nb	0.00E+00	0.00E+00	0.00E+00	1.13E-14	4.83E-09	1.87E-13	1.13E-14	4.83E-09	1.87E-13
^{237}Np	0.00E+00	0.00E+00	0.00E+00	1.66E-18	7.11E-13	2.22E-12	1.66E-18	7.11E-13	2.22E-12
^{238}Pu	0.00E+00	0.00E+00	0.00E+00	9.41E-18	4.02E-12	5.17E-16	9.41E-18	4.02E-12	5.17E-16
^{239}Pu	0.00E+00	0.00E+00	0.00E+00	1.30E-16	5.55E-11	1.97E-12	1.30E-16	5.55E-11	1.97E-12
^{240}Pu	0.00E+00	0.00E+00	0.00E+00	3.37E-17	1.44E-11	1.40E-13	3.37E-17	1.44E-11	1.40E-13
^{241}Pu	0.00E+00	0.00E+00	0.00E+00	7.08E-16	3.02E-10	6.47E-15	7.08E-16	3.02E-10	6.47E-15
^{242}Pu	0.00E+00	0.00E+00	0.00E+00	3.56E-21	1.52E-15	8.52E-16	3.56E-21	1.52E-15	8.52E-16
^{125}Sb	0.00E+00	0.00E+00	0.00E+00	4.82E-15	2.06E-09	4.37E-15	4.82E-15	2.06E-09	4.37E-15
^{151}Sm	0.00E+00	0.00E+00	0.00E+00	3.99E-15	1.70E-09	1.43E-13	3.99E-15	1.70E-09	1.43E-13
^{126}Sn	0.00E+00	0.00E+00	0.00E+00	3.10E-17	1.32E-11	2.57E-12	3.10E-17	1.32E-11	2.57E-12
^{90}Sr	6.65E-13	2.84E-07	4.53E-12	6.96E-13	2.97E-07	4.74E-12	1.36E-12	5.81E-07	9.27E-12
^{99}Tc	0.00E+00	0.00E+00	0.00E+00	5.25E-13	2.24E-07	2.91E-08	5.25E-13	2.24E-07	2.91E-08
^{232}Th	0.00E+00	0.00E+00	0.00E+00	4.99E-20	2.13E-14	4.27E-10	4.99E-20	2.13E-14	4.27E-10
^{233}U	0.00E+00	0.00E+00	0.00E+00	1.70E-18	7.26E-13	1.66E-13	1.70E-18	7.26E-13	1.66E-13
^{234}U	0.00E+00	0.00E+00	0.00E+00	1.19E-18	5.09E-13	1.81E-13	1.19E-18	5.09E-13	1.81E-13
^{235}U	0.00E+00	0.00E+00	0.00E+00	4.69E-20	2.00E-14	2.04E-11	4.69E-20	2.00E-14	2.04E-11
^{236}U	0.00E+00	0.00E+00	0.00E+00	8.03E-20	3.43E-14	1.17E-12	8.03E-20	3.43E-14	1.17E-12
^{238}U	0.00E+00	0.00E+00	0.00E+00	9.30E-19	3.97E-13	2.60E-09	9.30E-19	3.97E-13	2.60E-09

(1) All radionuclides in gaseous streams are assumed to exist as solid particulate.

CAS Comp	Organic Components				
Unit	mol/L	Lb/gal	Lb/day	lb/day	g/sec
Total	7.41E-09	1.54E-08	1.74E-03	7.90E-07	9.15E-06
50-32-8	3.62E-09	7.63E-09	8.61E-04	3.91E-07	4.53E-06
56-23-5	0.00E+00	0.00E+00	0.00E+00	0.00E+00	0.00E+00
57-14-7	1.20E-25	6.01E-26	6.78E-21	3.08E-24	3.56E-23
58-90-2	0.00E+00	0.00E+00	0.00E+00	0.00E+00	0.00E+00
59-89-2	0.00E+00	0.00E+00	0.00E+00	0.00E+00	0.00E+00
60-35-5	6.09E-26	3.00E-26	3.38E-21	1.54E-24	1.78E-23
62-75-9	0.00E+00	0.00E+00	0.00E+00	0.00E+00	0.00E+00
64-19-7	0.00E+00	0.00E+00	0.00E+00	0.00E+00	0.00E+00
71-43-2	0.00E+00	0.00E+00	0.00E+00	0.00E+00	0.00E+00
75-05-8	0.00E+00	0.00E+00	0.00E+00	0.00E+00	0.00E+00
75-12-7	0.00E+00	0.00E+00	0.00E+00	0.00E+00	0.00E+00
76-15-3	0.00E+00	0.00E+00	0.00E+00	0.00E+00	0.00E+00
79-01-6	0.00E+00	0.00E+00	0.00E+00	0.00E+00	0.00E+00
83-32-9	0.00E+00	0.00E+00	0.00E+00	0.00E+00	0.00E+00
84-66-2	0.00E+00	0.00E+00	0.00E+00	0.00E+00	0.00E+00
84-74-2	2.51E-09	5.83E-09	6.58E-04	2.99E-07	3.48E-06
87-68-3	0.00E+00	0.00E+00	0.00E+00	0.00E+00	0.00E+00
88-89-1	6.14E-29	1.17E-28	1.32E-23	6.02E-27	6.98E-26
91-20-3	0.00E+00	0.00E+00	0.00E+00	0.00E+00	0.00E+00
95-50-1	0.00E+00	0.00E+00	0.00E+00	0.00E+00	0.00E+00
98-86-2	0.00E+00	0.00E+00	0.00E+00	0.00E+00	0.00E+00
100-21-0	8.21E-14	1.14E-13	1.28E-08	5.84E-12	6.75E-11
101-84-8	0.00E+00	0.00E+00	0.00E+00	0.00E+00	0.00E+00
106-93-4	0.00E+00	0.00E+00	0.00E+00	0.00E+00	0.00E+00
106-97-8	0.00E+00	0.00E+00	0.00E+00	0.00E+00	0.00E+00
106-99-0	0.00E+00	0.00E+00	0.00E+00	0.00E+00	0.00E+00
108-87-2	0.00E+00	0.00E+00	0.00E+00	0.00E+00	0.00E+00
108-88-3	0.00E+00	0.00E+00	0.00E+00	0.00E+00	0.00E+00
108-95-2	0.00E+00	0.00E+00	0.00E+00	0.00E+00	0.00E+00
110-54-3	0.00E+00	0.00E+00	0.00E+00	0.00E+00	0.00E+00
110-82-7	0.00E+00	0.00E+00	0.00E+00	0.00E+00	0.00E+00
111-84-2	0.00E+00	0.00E+00	0.00E+00	0.00E+00	0.00E+00
120-12-7	3.01E-11	4.48E-11	5.05E-06	2.30E-09	2.66E-08
120-82-1	0.00E+00	0.00E+00	0.00E+00	0.00E+00	0.00E+00
122-39-4	7.22E-10	1.02E-09	1.15E-04	5.23E-08	6.05E-07
126-73-8	0.00E+00	0.00E+00	0.00E+00	0.00E+00	0.00E+00
127-18-4	0.00E+00	0.00E+00	0.00E+00	0.00E+00	0.00E+00
129-00-0	5.26E-10	8.88E-10	1.00E-04	4.55E-08	5.27E-07
132-64-9	1.05E-29	1.47E-29	1.65E-24	7.52E-28	8.70E-27
144-62-7	0.00E+00	0.00E+00	0.00E+00	0.00E+00	0.00E+00
193-39-5	1.21E-13	2.78E-13	3.15E-08	1.43E-11	1.66E-10
206-44-0	0.00E+00	0.00E+00	0.00E+00	0.00E+00	0.00E+00
206-96-8	0.00E+00	0.00E+00	0.00E+00	0.00E+00	0.00E+00
803-34-9	0.00E+00	0.00E+00	0.00E+00	0.00E+00	0.00E+00
821-64-7	0.00E+00	0.00E+00	0.00E+00	0.00E+00	0.00E+00
1321-64-8	0.00E+00	0.00E+00	0.00E+00	0.00E+00	0.00E+00
1336-36-3	5.25E-15	1.41E-14	1.59E-09	7.23E-13	8.36E-12
3697-24-3	0.00E+00	0.00E+00	0.00E+00	0.00E+00	0.00E+00
4170-30-3	0.00E+00	0.00E+00	0.00E+00	0.00E+00	0.00E+00
10061-01-5	0.00E+00	0.00E+00	0.00E+00	0.00E+00	0.00E+00
26140-60-3	0.00E+00	0.00E+00	0.00E+00	0.00E+00	0.00E+00

Table A-9 RLD33 Stream Report

Stream Number: RLD33
Stream Name: LAW Plant wash vessel vent
Configuration: MRQ-05-0049.acmf
Run Date / Time: 12/14/2005 - 1:42:25 PM
Run Data File: H:\ACM v9.1\MRQ-05-0049\MRQ_05_0049A_Streams.csv

Variable	Value	Units	
Density	1.13E-03	g/cm³	(does not include solid phase)
Enthalpy	-3.83E+02	BTU/hr	
Mass Flow	2.49E+00	Lb/hr	
	5.97E+01	Lb/day	
Volumetric Flow	4.41E+00	GPM	(does not include solid phase)
	5.89E-01	ft³/min	(does not include solid phase)
Molar Flow	8.76E-02	Lbmol/hr	
Molecular Weight	2.84E+01	Lb/Lbmol	
Pressure	1.00E+03	mbar	
Temperature	3.00E+01	C	
Na Molarity	0.00E+00	mol/L	
pH	0.00E+00	pH	
Total TRU	0.00E+00	Ci/L	
Total Activity	0.00E+00	Ci/L	

Component	Aqueous Comp			Solid Comp	Gaseous (1)		Total Comp		
Unit	mol/L	Lb/gal	Lb/day	Lb/day	mol/L	Lb/day	Lb/day	mt/day	g/sec
Total	1.76E-09	2.84E-10	1.68E-08	0.00E+00	3.87E-02	5.97E+01	5.97E+01	2.71E-02	3.14E-01
Ag^{+}	0.00E+00	0.00E+00	0.00E+00	0.00E+00	0.00E+00	0.00E+00	0.00E+00	0.00E+00	0.00E+00
Al^{+3}	0.00E+00	0.00E+00	0.00E+00	0.00E+00	0.00E+00	0.00E+00	0.00E+00	0.00E+00	0.00E+00
As^{+3}	0.00E+00	0.00E+00	0.00E+00	0.00E+00	0.00E+00	0.00E+00	0.00E+00	0.00E+00	0.00E+00
B^{+3}	0.00E+00	0.00E+00	0.00E+00	0.00E+00	0.00E+00	0.00E+00	0.00E+00	0.00E+00	0.00E+00
Ba^{+2}	0.00E+00	0.00E+00	0.00E+00	0.00E+00	0.00E+00	0.00E+00	0.00E+00	0.00E+00	0.00E+00
Br^{-}	0.00E+00	0.00E+00	0.00E+00	0.00E+00	0.00E+00	0.00E+00	0.00E+00	0.00E+00	0.00E+00
Ca^{+2}	0.00E+00	0.00E+00	0.00E+00	0.00E+00	0.00E+00	0.00E+00	0.00E+00	0.00E+00	0.00E+00
Cd^{+2}	0.00E+00	0.00E+00	0.00E+00	0.00E+00	0.00E+00	0.00E+00	0.00E+00	0.00E+00	0.00E+00
Ce^{+3}	0.00E+00	0.00E+00	0.00E+00	0.00E+00	0.00E+00	0.00E+00	0.00E+00	0.00E+00	0.00E+00
Cl	0.00E+00	0.00E+00	0.00E+00	0.00E+00	0.00E+00	0.00E+00	0.00E+00	0.00E+00	0.00E+00
CO	0.00E+00	0.00E+00	0.00E+00	0.00E+00	0.00E+00	0.00E+00	0.00E+00	0.00E+00	0.00E+00
CO_2	0.00E+00	0.00E+00	0.00E+00	0.00E+00	0.00E+00	0.00E+00	0.00E+00	0.00E+00	0.00E+00
CO_3^{-2}	0.00E+00	0.00E+00	0.00E+00	0.00E+00	0.00E+00	0.00E+00	0.00E+00	0.00E+00	0.00E+00
Cr^{+3}	0.00E+00	0.00E+00	0.00E+00	0.00E+00	0.00E+00	0.00E+00	0.00E+00	0.00E+00	0.00E+00
Cu^{+2}	0.00E+00	0.00E+00	0.00E+00	0.00E+00	0.00E+00	0.00E+00	0.00E+00	0.00E+00	0.00E+00
F^{-}	0.00E+00	0.00E+00	0.00E+00	0.00E+00	0.00E+00	0.00E+00	0.00E+00	0.00E+00	0.00E+00
Fe^{+3}	0.00E+00	0.00E+00	0.00E+00	0.00E+00	0.00E+00	0.00E+00	0.00E+00	0.00E+00	0.00E+00
H_2O	1.76E-09	2.84E-10	1.68E-08	0.00E+00	1.69E-03	1.62E+00	1.62E+00	7.34E-04	8.50E-03
$H_2O(b)$	0.00E+00	0.00E+00	0.00E+00	0.00E+00	0.00E+00	0.00E+00	0.00E+00	0.00E+00	0.00E+00
H^{+}	0.00E+00	0.00E+00	0.00E+00	0.00E+00	0.00E+00	0.00E+00	0.00E+00	0.00E+00	0.00E+00
HCL	0.00E+00	0.00E+00	0.00E+00	0.00E+00	0.00E+00	0.00E+00	0.00E+00	0.00E+00	0.00E+00
HCO3-	0.00E+00	0.00E+00	0.00E+00	0.00E+00	0.00E+00	0.00E+00	0.00E+00	0.00E+00	0.00E+00
H2CO3	0.00E+00	0.00E+00	0.00E+00	0.00E+00	0.00E+00	0.00E+00	0.00E+00	0.00E+00	0.00E+00
HF	0.00E+00	0.00E+00	0.00E+00	0.00E+00	0.00E+00	0.00E+00	0.00E+00	0.00E+00	0.00E+00
Hg^{+2}	0.00E+00	0.00E+00	0.00E+00	0.00E+00	0.00E+00	0.00E+00	0.00E+00	0.00E+00	0.00E+00
HNO_3	0.00E+00	0.00E+00	0.00E+00	0.00E+00	0.00E+00	0.00E+00	0.00E+00	0.00E+00	0.00E+00
K^{+}	0.00E+00	0.00E+00	0.00E+00	0.00E+00	0.00E+00	0.00E+00	0.00E+00	0.00E+00	0.00E+00
La^{+3}	0.00E+00	0.00E+00	0.00E+00	0.00E+00	0.00E+00	0.00E+00	0.00E+00	0.00E+00	0.00E+00
Li^{+}	0.00E+00	0.00E+00	0.00E+00	0.00E+00	0.00E+00	0.00E+00	0.00E+00	0.00E+00	0.00E+00
Mg^{+2}	0.00E+00	0.00E+00	0.00E+00	0.00E+00	0.00E+00	0.00E+00	0.00E+00	0.00E+00	0.00E+00
Mn^{+3}	0.00E+00	0.00E+00	0.00E+00	0.00E+00	0.00E+00	0.00E+00	0.00E+00	0.00E+00	0.00E+00
MnO_4^{-}	0.00E+00	0.00E+00	0.00E+00	0.00E+00	0.00E+00	0.00E+00	0.00E+00	0.00E+00	0.00E+00
N_2	0.00E+00	0.00E+00	0.00E+00	0.00E+00	3.00E-02	4.45E+01	4.45E+01	2.02E-02	2.34E-01
Na^{+}	0.00E+00	0.00E+00	0.00E+00	0.00E+00	0.00E+00	0.00E+00	0.00E+00	0.00E+00	0.00E+00
NHG	0.00E+00	0.00E+00	0.00E+00	0.00E+00	3.33E-27	3.01E-24	3.01E-24	1.37E-27	1.58E-26
NH4+	0.00E+00	0.00E+00	0.00E+00	0.00E+00	0.00E+00	0.00E+00	0.00E+00	0.00E+00	0.00E+00
Ni^{+2}	0.00E+00	0.00E+00	0.00E+00	0.00E+00	0.00E+00	0.00E+00	0.00E+00	0.00E+00	0.00E+00
NO	0.00E+00	0.00E+00	0.00E+00	0.00E+00	0.00E+00	0.00E+00	0.00E+00	0.00E+00	0.00E+00
NO_2	0.00E+00	0.00E+00	0.00E+00	0.00E+00	0.00E+00	0.00E+00	0.00E+00	0.00E+00	0.00E+00
NO_2^{-}	0.00E+00	0.00E+00	0.00E+00	0.00E+00	0.00E+00	0.00E+00	0.00E+00	0.00E+00	0.00E+00
NO_3^{-}	0.00E+00	0.00E+00	0.00E+00	0.00E+00	0.00E+00	0.00E+00	0.00E+00	0.00E+00	0.00E+00
O_2	0.00E+00	0.00E+00	0.00E+00	0.00E+00	7.98E-03	1.35E+01	1.35E+01	6.15E-03	7.12E-02
O	0.00E+00	0.00E+00	0.00E+00	0.00E+00	0.00E+00	0.00E+00	0.00E+00	0.00E+00	0.00E+00
OH^{-}	0.00E+00	0.00E+00	0.00E+00	0.00E+00	0.00E+00	0.00E+00	0.00E+00	0.00E+00	0.00E+00
OH(b)	0.00E+00	0.00E+00	0.00E+00	0.00E+00	0.00E+00	0.00E+00	0.00E+00	0.00E+00	0.00E+00
Pb^{+2}	0.00E+00	0.00E+00	0.00E+00	0.00E+00	0.00E+00	0.00E+00	0.00E+00	0.00E+00	0.00E+00
Pd^{+2}	0.00E+00	0.00E+00	0.00E+00	0.00E+00	0.00E+00	0.00E+00	0.00E+00	0.00E+00	0.00E+00
PO_4^{-3}	0.00E+00	0.00E+00	0.00E+00	0.00E+00	0.00E+00	0.00E+00	0.00E+00	0.00E+00	0.00E+00
Resin	0.00E+00	0.00E+00	0.00E+00	0.00E+00	0.00E+00	0.00E+00	0.00E+00	0.00E+00	0.00E+00
Rh^{+3}	0.00E+00	0.00E+00	0.00E+00	0.00E+00	0.00E+00	0.00E+00	0.00E+00	0.00E+00	0.00E+00
Ru^{+3}	0.00E+00	0.00E+00	0.00E+00	0.00E+00	0.00E+00	0.00E+00	0.00E+00	0.00E+00	0.00E+00
S^{-2}	0.00E+00	0.00E+00	0.00E+00	0.00E+00	0.00E+00	0.00E+00	0.00E+00	0.00E+00	0.00E+00
SiO2	0.00E+00	0.00E+00	0.00E+00	0.00E+00	0.00E+00	0.00E+00	0.00E+00	0.00E+00	0.00E+00
SiO_4^{-4}	0.00E+00	0.00E+00	0.00E+00	0.00E+00	0.00E+00	0.00E+00	0.00E+00	0.00E+00	0.00E+00
SO_2	0.00E+00	0.00E+00	0.00E+00	0.00E+00	0.00E+00	0.00E+00	0.00E+00	0.00E+00	0.00E+00
SO_4^{-2}	0.00E+00	0.00E+00	0.00E+00	0.00E+00	0.00E+00	0.00E+00	0.00E+00	0.00E+00	0.00E+00
Sr^{+2}	0.00E+00	0.00E+00	0.00E+00	0.00E+00	0.00E+00	0.00E+00	0.00E+00	0.00E+00	0.00E+00
Sucrose	0.00E+00	0.00E+00	0.00E+00	0.00E+00	0.00E+00	0.00E+00	0.00E+00	0.00E+00	0.00E+00
Tl^{+4}	0.00E+00	0.00E+00	0.00E+00	0.00E+00	0.00E+00	0.00E+00	0.00E+00	0.00E+00	0.00E+00
Zn^{+2}	0.00E+00	0.00E+00	0.00E+00	0.00E+00	0.00E+00	0.00E+00	0.00E+00	0.00E+00	0.00E+00
Zr^{+4}	0.00E+00	0.00E+00	0.00E+00	0.00E+00	0.00E+00	0.00E+00	0.00E+00	0.00E+00	0.00E+00

Components	Aqueous Comp			Solid Comp	Gaseous		Total Comp		
Unit	mol/L	Lb/gal	Lb/day	Lb/day	mol/L	Lb/day	Lb/day	Mt/day	g/sec
Total	0.00E+00	0.00E+00	0.00E+00	0.00E+00	0.00E+00	0.00E+00	0.00E+00	0.00E+00	0.00E+00

$C_2O_4^{-2}$	0.00E+00	0.00E+00	0.00E+00	0.00E+00	0.00E+00	0.00E+00	0.00E+00	0.00E+00	0.00E+00
Formate	0.00E+00	0.00E+00	0.00E+00	0.00E+00	0.00E+00	0.00E+00	0.00E+00	0.00E+00	0.00E+00
Acetate	0.00E+00	0.00E+00	0.00E+00	0.00E+00	0.00E+00	0.00E+00	0.00E+00	0.00E+00	0.00E+00
Glycolate	0.00E+00	0.00E+00	0.00E+00	0.00E+00	0.00E+00	0.00E+00	0.00E+00	0.00E+00	0.00E+00
IDA	0.00E+00	0.00E+00	0.00E+00	0.00E+00	0.00E+00	0.00E+00	0.00E+00	0.00E+00	0.00E+00
Citrate	0.00E+00	0.00E+00	0.00E+00	0.00E+00	0.00E+00	0.00E+00	0.00E+00	0.00E+00	0.00E+00
HEDTA	0.00E+00	0.00E+00	0.00E+00	0.00E+00	0.00E+00	0.00E+00	0.00E+00	0.00E+00	0.00E+00
EDTA	0.00E+00	0.00E+00	0.00E+00	0.00E+00	0.00E+00	0.00E+00	0.00E+00	0.00E+00	0.00E+00

Rad. Comp	Aqueous Rad. Comp			Solids Rad. Comp (1)			Total Rad. Comp (1)		
Unit	Ci/L	Ci/day	Lb/day	Ci/L	Ci/day	Lb/day	Ci/L	Ci/day	Lb/day
Total	0.00E+00	0.00E+00	0.00E+00	0.00E+00	0.00E+00	0.00E+00	0.00E+00	0.00E+00	0.00E+00
^{241}Am	0.00E+00	0.00E+00	0.00E+00	0.00E+00	0.00E+00	0.00E+00	0.00E+00	0.00E+00	0.00E+00
^{243}Am	0.00E+00	0.00E+00	0.00E+00	0.00E+00	0.00E+00	0.00E+00	0.00E+00	0.00E+00	0.00E+00
^{14}C	0.00E+00	0.00E+00	0.00E+00	0.00E+00	0.00E+00	0.00E+00	0.00E+00	0.00E+00	0.00E+00
^{60}Co	0.00E+00	0.00E+00	0.00E+00	0.00E+00	0.00E+00	0.00E+00	0.00E+00	0.00E+00	0.00E+00
^{243}Cm	0.00E+00	0.00E+00	0.00E+00	0.00E+00	0.00E+00	0.00E+00	0.00E+00	0.00E+00	0.00E+00
^{244}Cm	0.00E+00	0.00E+00	0.00E+00	0.00E+00	0.00E+00	0.00E+00	0.00E+00	0.00E+00	0.00E+00
^{137}Cs	0.00E+00	0.00E+00	0.00E+00	0.00E+00	0.00E+00	0.00E+00	0.00E+00	0.00E+00	0.00E+00
^{152}Eu	0.00E+00	0.00E+00	0.00E+00	0.00E+00	0.00E+00	0.00E+00	0.00E+00	0.00E+00	0.00E+00
^{154}Eu	0.00E+00	0.00E+00	0.00E+00	0.00E+00	0.00E+00	0.00E+00	0.00E+00	0.00E+00	0.00E+00
^{155}Eu	0.00E+00	0.00E+00	0.00E+00	0.00E+00	0.00E+00	0.00E+00	0.00E+00	0.00E+00	0.00E+00
^{3}H	0.00E+00	0.00E+00	0.00E+00	0.00E+00	0.00E+00	0.00E+00	0.00E+00	0.00E+00	0.00E+00
^{129}I	0.00E+00	0.00E+00	0.00E+00	0.00E+00	0.00E+00	0.00E+00	0.00E+00	0.00E+00	0.00E+00
^{63}Ni	0.00E+00	0.00E+00	0.00E+00	0.00E+00	0.00E+00	0.00E+00	0.00E+00	0.00E+00	0.00E+00
^{237}Np	0.00E+00	0.00E+00	0.00E+00	0.00E+00	0.00E+00	0.00E+00	0.00E+00	0.00E+00	0.00E+00
^{238}Pu	0.00E+00	0.00E+00	0.00E+00	0.00E+00	0.00E+00	0.00E+00	0.00E+00	0.00E+00	0.00E+00
^{239}Pu	0.00E+00	0.00E+00	0.00E+00	0.00E+00	0.00E+00	0.00E+00	0.00E+00	0.00E+00	0.00E+00
^{240}Pu	0.00E+00	0.00E+00	0.00E+00	0.00E+00	0.00E+00	0.00E+00	0.00E+00	0.00E+00	0.00E+00
^{241}Pu	0.00E+00	0.00E+00	0.00E+00	0.00E+00	0.00E+00	0.00E+00	0.00E+00	0.00E+00	0.00E+00
^{242}Pu	0.00E+00	0.00E+00	0.00E+00	0.00E+00	0.00E+00	0.00E+00	0.00E+00	0.00E+00	0.00E+00
^{125}Sb	0.00E+00	0.00E+00	0.00E+00	0.00E+00	0.00E+00	0.00E+00	0.00E+00	0.00E+00	0.00E+00
^{151}Sm	0.00E+00	0.00E+00	0.00E+00	0.00E+00	0.00E+00	0.00E+00	0.00E+00	0.00E+00	0.00E+00
^{126}Sn	0.00E+00	0.00E+00	0.00E+00	0.00E+00	0.00E+00	0.00E+00	0.00E+00	0.00E+00	0.00E+00
^{90}Sr	0.00E+00	0.00E+00	0.00E+00	0.00E+00	0.00E+00	0.00E+00	0.00E+00	0.00E+00	0.00E+00
^{99}Tc	0.00E+00	0.00E+00	0.00E+00	0.00E+00	0.00E+00	0.00E+00	0.00E+00	0.00E+00	0.00E+00
^{232}Th	0.00E+00	0.00E+00	0.00E+00	0.00E+00	0.00E+00	0.00E+00	0.00E+00	0.00E+00	0.00E+00
^{233}U	0.00E+00	0.00E+00	0.00E+00	0.00E+00	0.00E+00	0.00E+00	0.00E+00	0.00E+00	0.00E+00
^{234}U	0.00E+00	0.00E+00	0.00E+00	0.00E+00	0.00E+00	0.00E+00	0.00E+00	0.00E+00	0.00E+00
^{235}U	0.00E+00	0.00E+00	0.00E+00	0.00E+00	0.00E+00	0.00E+00	0.00E+00	0.00E+00	0.00E+00
^{236}U	0.00E+00	0.00E+00	0.00E+00	0.00E+00	0.00E+00	0.00E+00	0.00E+00	0.00E+00	0.00E+00
^{238}U	0.00E+00	0.00E+00	0.00E+00	0.00E+00	0.00E+00	0.00E+00	0.00E+00	0.00E+00	0.00E+00

(1) All radionuclides in gaseous streams are assumed to exist as solid particulate

CAS Comp	Organic Components				
Unit	mol/L	Lb/gal	Lb/day	Mt/day	g/sec
Total	0.00E+00	0.00E+00	0.00E+00	0.00E+00	0.00E+00
50-32-8	0.00E+00	0.00E+00	0.00E+00	0.00E+00	0.00E+00
56-23-5	0.00E+00	0.00E+00	0.00E+00	0.00E+00	0.00E+00
57-14-7	0.00E+00	0.00E+00	0.00E+00	0.00E+00	0.00E+00
58-90-2	0.00E+00	0.00E+00	0.00E+00	0.00E+00	0.00E+00
59-89-2	0.00E+00	0.00E+00	0.00E+00	0.00E+00	0.00E+00
60-35-5	0.00E+00	0.00E+00	0.00E+00	0.00E+00	0.00E+00
62-75-9	0.00E+00	0.00E+00	0.00E+00	0.00E+00	0.00E+00
64-19-7	0.00E+00	0.00E+00	0.00E+00	0.00E+00	0.00E+00
71-43-2	0.00E+00	0.00E+00	0.00E+00	0.00E+00	0.00E+00
75-05-8	0.00E+00	0.00E+00	0.00E+00	0.00E+00	0.00E+00
75-12-7	0.00E+00	0.00E+00	0.00E+00	0.00E+00	0.00E+00
76-15-3	0.00E+00	0.00E+00	0.00E+00	0.00E+00	0.00E+00
79-01-6	0.00E+00	0.00E+00	0.00E+00	0.00E+00	0.00E+00
83-32-9	0.00E+00	0.00E+00	0.00E+00	0.00E+00	0.00E+00
84-66-2	0.00E+00	0.00E+00	0.00E+00	0.00E+00	0.00E+00
84-74-2	0.00E+00	0.00E+00	0.00E+00	0.00E+00	0.00E+00
87-86-3	0.00E+00	0.00E+00	0.00E+00	0.00E+00	0.00E+00
88-89-1	0.00E+00	0.00E+00	0.00E+00	0.00E+00	0.00E+00
91-20-3	0.00E+00	0.00E+00	0.00E+00	0.00E+00	0.00E+00
95-50-1	0.00E+00	0.00E+00	0.00E+00	0.00E+00	0.00E+00
98-86-2	0.00E+00	0.00E+00	0.00E+00	0.00E+00	0.00E+00
100-21-0	0.00E+00	0.00E+00	0.00E+00	0.00E+00	0.00E+00
101-84-8	0.00E+00	0.00E+00	0.00E+00	0.00E+00	0.00E+00
106-93-4	0.00E+00	0.00E+00	0.00E+00	0.00E+00	0.00E+00
106-97-8	0.00E+00	0.00E+00	0.00E+00	0.00E+00	0.00E+00
106-99-0	0.00E+00	0.00E+00	0.00E+00	0.00E+00	0.00E+00
108-87-2	0.00E+00	0.00E+00	0.00E+00	0.00E+00	0.00E+00
108-88-3	0.00E+00	0.00E+00	0.00E+00	0.00E+00	0.00E+00
108-95-2	0.00E+00	0.00E+00	0.00E+00	0.00E+00	0.00E+00
110-54-3	0.00E+00	0.00E+00	0.00E+00	0.00E+00	0.00E+00
110-82-7	0.00E+00	0.00E+00	0.00E+00	0.00E+00	0.00E+00
111-84-2	0.00E+00	0.00E+00	0.00E+00	0.00E+00	0.00E+00
120-12-7	0.00E+00	0.00E+00	0.00E+00	0.00E+00	0.00E+00
120-82-1	0.00E+00	0.00E+00	0.00E+00	0.00E+00	0.00E+00
122-39-4	0.00E+00	0.00E+00	0.00E+00	0.00E+00	0.00E+00
126-73-8	0.00E+00	0.00E+00	0.00E+00	0.00E+00	0.00E+00
127-18-4	0.00E+00	0.00E+00	0.00E+00	0.00E+00	0.00E+00
129-00-0	0.00E+00	0.00E+00	0.00E+00	0.00E+00	0.00E+00
132-64-9	0.00E+00	0.00E+00	0.00E+00	0.00E+00	0.00E+00
144-62-7	0.00E+00	0.00E+00	0.00E+00	0.00E+00	0.00E+00
183-39-5	0.00E+00	0.00E+00	0.00E+00	0.00E+00	0.00E+00
206-44-0	0.00E+00	0.00E+00	0.00E+00	0.00E+00	0.00E+00
208-96-8	0.00E+00	0.00E+00	0.00E+00	0.00E+00	0.00E+00
503-34-9	0.00E+00	0.00E+00	0.00E+00	0.00E+00	0.00E+00
621-64-7	0.00E+00	0.00E+00	0.00E+00	0.00E+00	0.00E+00
1321-64-8	0.00E+00	0.00E+00	0.00E+00	0.00E+00	0.00E+00
1336-36-3	0.00E+00	0.00E+00	0.00E+00	0.00E+00	0.00E+00
3697-24-3	0.00E+00	0.00E+00	0.00E+00	0.00E+00	0.00E+00
4170-30-3	0.00E+00	0.00E+00	0.00E+00	0.00E+00	0.00E+00
10061-01-5	0.00E+00	0.00E+00	0.00E+00	0.00E+00	0.00E+00
26140-60-3	0.00E+00	0.00E+00	0.00E+00	0.00E+00	0.00E+00

Table A-10 RLD34 Stream Report

Stream Number: RLD34
Stream Name: LAW C3/C5 drain/sump collection vessel vent
Configuration: MRQ-05-0049.acmf
Run Date / Time: 12/14/2005 - 1:42:25 PM
Run Data File: H:\ACM v8.1\MRQ-05-0049\MRQ_05_0049A_Streams.csv

Variable	Value	Units	
Density	1.13E-03	g/cm³	(does not include solid phase)
Enthalpy	-6.81E+03	BTU/hr	
Mass Flow	4.42E+01	Lb/hr	
	1.06E+03	Lb/day	
Volumetric Flow	7.83E+01	GPM	(does not include solid phase)
	1.05E+01	ft³/min	(does not include solid phase)
Molar Flow	1.56E+00	Lbmol/hr	
Molecular Weight	2.84E+01	Lb/Lbmol	
Pressure	1.00E+03	mbar	
Temperature	3.00E+01	C	
Na Molarity	0.00E+00	mol/L	
pH	2.94E+00	pH	
Total TRU	1.41E-16	Ci/L	
Total Activity	2.45E-13	Ci/L	

Component	Aqueous Comp			Solid Comp	Gaseous (1)		Total Comp		
Unit	mol/L	Lb/gal	Lb/day	Lb/day	mol/L	Lb/day	Lb/day	mt/day	g/sec
Total	1.55E-09	2.38E-10	2.69E-05	5.04E-07	3.97E-02	1.06E+03	1.06E+03	4.82E-01	5.58E+00
Ag^{+}	0.00E+00	0.00E+00	0.00E+00	8.45E-11	0.00E+00	0.00E+00	8.45E-11	3.84E-14	4.45E-13
Al^{+3}	0.00E+00	0.00E+00	0.00E+00	8.25E-09	0.00E+00	0.00E+00	8.25E-09	3.75E-12	4.34E-11
As^{+3}	0.00E+00	0.00E+00	0.00E+00	5.44E-10	0.00E+00	0.00E+00	5.44E-10	2.47E-13	2.86E-12
B^{+3}	0.00E+00	0.00E+00	0.00E+00	6.39E-08	0.00E+00	0.00E+00	6.39E-08	2.90E-11	3.36E-10
Ba^{+2}	0.00E+00	0.00E+00	0.00E+00	5.42E-13	0.00E+00	0.00E+00	5.42E-13	2.46E-16	2.85E-15
Bi^{+3}	0.00E+00	0.00E+00	0.00E+00	4.46E-11	0.00E+00	0.00E+00	4.46E-11	2.03E-14	2.35E-13
Ca^{+2}	0.00E+00	0.00E+00	0.00E+00	1.95E-08	0.00E+00	0.00E+00	1.95E-08	8.88E-12	1.03E-10
Cd^{+2}	0.00E+00	0.00E+00	0.00E+00	6.50E-10	0.00E+00	0.00E+00	6.50E-10	2.96E-13	3.42E-12
Ce^{+3}	0.00E+00	0.00E+00	0.00E+00	3.45E-12	0.00E+00	0.00E+00	3.45E-12	1.57E-15	1.82E-14
Cl^{-}	1.23E-11	3.63E-12	4.10E-07	0.00E+00	0.00E+00	0.00E+00	4.10E-07	1.86E-10	2.16E-09
CO	0.00E+00	0.00E+00	0.00E+00	0.00E+00	0.00E+00	0.00E+00	0.00E+00	0.00E+00	0.00E+00
CO_2	1.32E-14	4.85E-15	5.47E-10	0.00E+00	0.00E+00	0.00E+00	5.47E-10	2.49E-13	2.88E-12
CO_3^{-2}	2.98E-12	1.49E-12	1.68E-07	0.00E+00	0.00E+00	0.00E+00	1.68E-07	7.64E-11	8.85E-10
Cr^{+3}	0.00E+00	0.00E+00	0.00E+00	4.68E-09	0.00E+00	0.00E+00	4.68E-09	2.13E-12	2.46E-11
Cu^{+2}	0.00E+00	0.00E+00	0.00E+00	7.50E-12	0.00E+00	0.00E+00	7.50E-12	3.41E-15	3.95E-14
F^{-}	7.55E-13	1.20E-13	1.35E-08	0.00E+00	0.00E+00	0.00E+00	1.35E-08	6.14E-12	7.11E-11
Fe^{+3}	0.00E+00	0.00E+00	0.00E+00	5.18E-09	0.00E+00	0.00E+00	5.18E-09	2.35E-12	2.72E-11
H_2O	1.50E-09	2.26E-10	2.55E-05	0.00E+00	1.69E-03	2.87E+01	2.87E+01	1.30E-02	1.51E-01
$H_2O(b)$	0.00E+00	0.00E+00	0.00E+00	0.00E+00	0.00E+00	0.00E+00	0.00E+00	0.00E+00	0.00E+00
H^{+}	8.70E-25	7.32E-27	8.26E-22	0.00E+00	0.00E+00	0.00E+00	8.26E-22	3.75E-25	4.34E-24
HCL	0.00E+00	0.00E+00	0.00E+00	0.00E+00	0.00E+00	0.00E+00	0.00E+00	0.00E+00	0.00E+00
HCO3-	0.00E+00	0.00E+00	0.00E+00	3.73E-24	0.00E+00	0.00E+00	3.73E-24	1.69E-27	1.96E-26
H2CO3	0.00E+00	0.00E+00	0.00E+00	0.00E+00	0.00E+00	0.00E+00	0.00E+00	0.00E+00	0.00E+00
HF	0.00E+00	0.00E+00	0.00E+00	0.00E+00	0.00E+00	0.00E+00	0.00E+00	0.00E+00	0.00E+00
Hg^{+2}	0.00E+00	0.00E+00	0.00E+00	0.00E+00	0.00E+00	0.00E+00	0.00E+00	0.00E+00	0.00E+00
HNO_3	0.00E+00	0.00E+00	0.00E+00	0.00E+00	0.00E+00	0.00E+00	0.00E+00	0.00E+00	0.00E+00
K^{+}	5.66E-12	1.85E-12	2.08E-07	0.00E+00	0.00E+00	0.00E+00	2.08E-07	9.46E-11	1.10E-09
La^{+3}	0.00E+00	0.00E+00	0.00E+00	7.74E-14	0.00E+00	0.00E+00	7.74E-14	3.52E-17	4.07E-16
Li^{+}	0.00E+00	0.00E+00	0.00E+00	4.17E-08	0.00E+00	0.00E+00	4.17E-08	1.89E-11	2.19E-10
Mg^{+2}	0.00E+00	0.00E+00	0.00E+00	1.48E-08	0.00E+00	0.00E+00	1.48E-08	6.72E-12	7.77E-11
Mn^{+3}	0.00E+00	0.00E+00	0.00E+00	6.61E-11	0.00E+00	0.00E+00	6.61E-11	3.00E-14	3.48E-13
MnO_4	0.00E+00	0.00E+00	0.00E+00	0.00E+00	0.00E+00	0.00E+00	0.00E+00	0.00E+00	0.00E+00
N_2	0.00E+00	0.00E+00	0.00E+00	0.00E+00	3.00E-02	7.91E+02	7.91E+02	3.60E-01	4.16E+00
Na^{+}	2.21E-11	4.24E-12	4.78E-07	0.00E+00	0.00E+00	0.00E+00	4.78E-07	2.17E-10	2.51E-09
NH3	0.00E+00	0.00E+00	0.00E+00	0.00E+00	0.00E+00	0.00E+00	0.00E+00	0.00E+00	0.00E+00
NH4+	0.00E+00	0.00E+00	0.00E+00	0.00E+00	0.00E+00	0.00E+00	0.00E+00	0.00E+00	0.00E+00
Ni^{+2}	0.00E+00	0.00E+00	0.00E+00	4.76E-10	0.00E+00	0.00E+00	4.76E-10	2.16E-13	2.50E-12
NO	0.00E+00	0.00E+00	0.00E+00	0.00E+00	0.00E+00	0.00E+00	0.00E+00	0.00E+00	0.00E+00
NO_2	0.00E+00	0.00E+00	0.00E+00	0.00E+00	0.00E+00	0.00E+00	0.00E+00	0.00E+00	0.00E+00
NO_2^{-}	0.00E+00	0.00E+00	0.00E+00	0.00E+00	0.00E+00	0.00E+00	0.00E+00	0.00E+00	0.00E+00
NO_3^{-}	0.00E+00	0.00E+00	0.00E+00	0.00E+00	0.00E+00	0.00E+00	0.00E+00	0.00E+00	0.00E+00
O_2	0.00E+00	0.00E+00	0.00E+00	0.00E+00	7.98E-03	2.40E+02	2.40E+02	1.09E-01	1.26E+00
O^{-}	0.00E+00	0.00E+00	0.00E+00	2.43E-07	0.00E+00	0.00E+00	2.43E-07	1.10E-10	1.28E-09
OH^{-}	8.75E-12	1.24E-12	1.40E-07	0.00E+00	0.00E+00	0.00E+00	1.40E-07	6.37E-11	7.37E-10
OH(b)	0.00E+00	0.00E+00	0.00E+00	0.00E+00	0.00E+00	0.00E+00	0.00E+00	0.00E+00	0.00E+00
Pb^{+2}	0.00E+00	0.00E+00	0.00E+00	2.82E-10	0.00E+00	0.00E+00	2.82E-10	1.28E-13	1.48E-12
Pd^{+2}	0.00E+00	0.00E+00	0.00E+00	1.17E-13	0.00E+00	0.00E+00	1.17E-13	5.31E-17	6.14E-16
PO_4^{-3}	0.00E+00	0.00E+00	0.00E+00	3.14E-08	0.00E+00	0.00E+00	3.14E-08	1.43E-11	1.65E-10
Resin	0.00E+00	0.00E+00	0.00E+00	0.00E+00	0.00E+00	0.00E+00	0.00E+00	0.00E+00	0.00E+00
Rh^{+3}	0.00E+00	0.00E+00	0.00E+00	1.16E-11	0.00E+00	0.00E+00	1.16E-11	5.27E-15	6.10E-14
Ru^{+3}	0.00E+00	0.00E+00	0.00E+00	2.04E-10	0.00E+00	0.00E+00	2.04E-10	9.26E-14	1.06E-12
S^{+6}	0.00E+00	0.00E+00	0.00E+00	0.00E+00	0.00E+00	0.00E+00	0.00E+00	0.00E+00	0.00E+00
SiO2	0.00E+00	0.00E+00	0.00E+00	5.16E-08	0.00E+00	0.00E+00	5.16E-08	2.34E-11	2.71E-10
SiO_4^{-4}	0.00E+00	0.00E+00	0.00E+00	2.77E-23	0.00E+00	0.00E+00	2.77E-23	1.26E-26	1.46E-25
SO_2	0.00E+00	0.00E+00	0.00E+00	0.00E+00	0.00E+00	0.00E+00	0.00E+00	0.00E+00	0.00E+00
SO_4^{-2}	0.00E+00	0.00E+00	0.00E+00	0.00E+00	0.00E+00	0.00E+00	0.00E+00	0.00E+00	0.00E+00
Sr^{+2}	0.00E+00	0.00E+00	0.00E+00	2.10E-13	0.00E+00	0.00E+00	2.10E-13	9.56E-17	1.11E-15
Sucrose	0.00E+00	0.00E+00	0.00E+00	0.00E+00	0.00E+00	0.00E+00	0.00E+00	0.00E+00	0.00E+00
Ti^{+4}	0.00E+00	0.00E+00	0.00E+00	2.63E-11	0.00E+00	0.00E+00	2.63E-11	1.20E-14	1.38E-13
Zn^{+2}	0.00E+00	0.00E+00	0.00E+00	1.39E-08	0.00E+00	0.00E+00	1.39E-08	6.31E-12	7.31E-11
Zr^{+4}	0.00E+00	0.00E+00	0.00E+00	4.49E-09	0.00E+00	0.00E+00	4.49E-09	2.04E-12	2.36E-11

Components	Aqueous Comp			Solid Comp	Gaseous		Total Comp		
Unit	mol/L	Lb/gal	Lb/day	Lb/day	mol/L	Lb/day	Lb/day	Mt/day	g/sec
Total	0.00E+00	0.00E+00	0.00E+00	4.61E-07	0.00E+00	0.00E+00	4.61E-07	2.10E-10	2.43E-09

$C_2O_4^{2-}$	0.00E+00	0.00E+00	0.00E+00	4.61E-07	0.00E+00	0.00E+00	4.61E-07	2.10E-10	2.43E-09
Formate	0.00E+00	0.00E+00	0.00E+00	0.00E+00	0.00E+00	0.00E+00	0.00E+00	0.00E+00	0.00E+00
Acetate	0.00E+00	0.00E+00	0.00E+00	0.00E+00	0.00E+00	0.00E+00	0.00E+00	0.00E+00	0.00E+00
Glycolate	0.00E+00	0.00E+00	0.00E+00	0.00E+00	0.00E+00	0.00E+00	0.00E+00	0.00E+00	0.00E+00
IDA	0.00E+00	0.00E+00	0.00E+00	0.00E+00	0.00E+00	0.00E+00	0.00E+00	0.00E+00	0.00E+00
Citrate	0.00E+00	0.00E+00	0.00E+00	0.00E+00	0.00E+00	0.00E+00	0.00E+00	0.00E+00	0.00E+00
HEDTA	0.00E+00	0.00E+00	0.00E+00	0.00E+00	0.00E+00	0.00E+00	0.00E+00	0.00E+00	0.00E+00
EDTA	0.00E+00	0.00E+00	0.00E+00	0.00E+00	0.00E+00	0.00E+00	0.00E+00	0.00E+00	0.00E+00

Rad Comp	Aqueous Rad. Comp			Solids Rad. Comp (1)			Total Rad. Comp (1)		
Unit	Ci/L	Ci/day	Lb/day	Ci/L	Ci/day	Lb/day	Ci/L	Ci/day	Lb/day
Total	0.00E+00	0.00E+00	0.00E+00	2.45E-13	1.05E-07	8.58E-09	2.45E-13	1.05E-07	8.58E-09
^{241}Am	0.00E+00	0.00E+00	0.00E+00	1.21E-16	5.18E-11	3.32E-14	1.21E-16	5.18E-11	3.32E-14
^{243}Am	0.00E+00	0.00E+00	0.00E+00	7.85E-20	3.35E-14	3.70E-18	7.85E-20	3.35E-14	3.70E-18
^{14}C	0.00E+00	0.00E+00	0.00E+00	0.00E+00	0.00E+00	0.00E+00	0.00E+00	0.00E+00	0.00E+00
^{60}Co	0.00E+00	0.00E+00	0.00E+00	8.38E-17	3.58E-11	6.97E-17	8.38E-17	3.58E-11	6.97E-17
^{243}Cm	0.00E+00	0.00E+00	0.00E+00	5.51E-21	2.35E-15	1.03E-19	5.51E-21	2.35E-15	1.03E-19
^{244}Cm	0.00E+00	0.00E+00	0.00E+00	1.30E-19	5.55E-14	1.51E-18	1.30E-19	5.55E-14	1.51E-18
^{137}Cs	0.00E+00	0.00E+00	0.00E+00	5.63E-14	2.40E-08	6.10E-13	5.63E-14	2.40E-08	6.10E-13
^{152}Eu	0.00E+00	0.00E+00	0.00E+00	3.60E-19	1.54E-13	1.95E-18	3.60E-19	1.54E-13	1.95E-18
^{154}Eu	0.00E+00	0.00E+00	0.00E+00	7.45E-17	3.18E-11	2.59E-16	7.45E-17	3.18E-11	2.59E-16
^{155}Eu	0.00E+00	0.00E+00	0.00E+00	2.15E-17	9.19E-12	4.17E-17	2.15E-17	9.19E-12	4.17E-17
^{3}H	0.00E+00	0.00E+00	0.00E+00	0.00E+00	0.00E+00	0.00E+00	0.00E+00	0.00E+00	0.00E+00
^{129}I	0.00E+00	0.00E+00	0.00E+00	0.00E+00	0.00E+00	0.00E+00	0.00E+00	0.00E+00	0.00E+00
^{63}Ni	0.00E+00	0.00E+00	0.00E+00	2.72E-15	1.16E-09	4.51E-14	2.72E-15	1.16E-09	4.51E-14
^{237}Np	0.00E+00	0.00E+00	0.00E+00	3.79E-20	1.62E-14	5.06E-14	3.79E-20	1.62E-14	5.06E-14
^{238}Pu	0.00E+00	0.00E+00	0.00E+00	2.14E-19	9.15E-14	1.18E-17	2.14E-19	9.15E-14	1.18E-17
^{239}Pu	0.00E+00	0.00E+00	0.00E+00	2.99E-18	1.28E-12	4.49E-14	2.99E-18	1.28E-12	4.49E-14
^{240}Pu	0.00E+00	0.00E+00	0.00E+00	7.67E-18	3.28E-13	3.18E-15	7.67E-18	3.28E-13	3.18E-15
^{241}Pu	0.00E+00	0.00E+00	0.00E+00	1.61E-17	6.88E-12	1.47E-16	1.61E-17	6.88E-12	1.47E-16
^{242}Pu	0.00E+00	0.00E+00	0.00E+00	8.12E-23	3.47E-17	1.94E-17	8.12E-23	3.47E-17	1.94E-17
^{125}Sb	0.00E+00	0.00E+00	0.00E+00	1.22E-15	5.21E-10	1.11E-15	1.22E-15	5.21E-10	1.11E-15
^{151}Sm	0.00E+00	0.00E+00	0.00E+00	5.36E-17	2.29E-11	1.92E-15	5.36E-17	2.29E-11	1.92E-15
^{126}Sn	0.00E+00	0.00E+00	0.00E+00	7.06E-19	3.01E-13	5.85E-14	7.06E-19	3.01E-13	5.85E-14
^{90}Sr	0.00E+00	0.00E+00	0.00E+00	3.10E-14	1.32E-08	2.11E-13	3.10E-14	1.32E-08	2.11E-13
^{99}Tc	0.00E+00	0.00E+00	0.00E+00	1.53E-13	6.54E-08	8.51E-09	1.53E-13	6.54E-08	8.51E-09
^{230}Th	0.00E+00	0.00E+00	0.00E+00	6.70E-22	2.86E-16	5.73E-12	6.70E-22	2.86E-16	5.73E-12
^{233}U	0.00E+00	0.00E+00	0.00E+00	3.88E-20	1.65E-14	3.79E-15	3.88E-20	1.65E-14	3.79E-15
^{234}U	0.00E+00	0.00E+00	0.00E+00	2.71E-20	1.16E-14	4.11E-15	2.71E-20	1.16E-14	4.11E-15
^{235}U	0.00E+00	0.00E+00	0.00E+00	1.07E-21	4.56E-16	4.65E-13	1.07E-21	4.56E-16	4.65E-13
^{236}U	0.00E+00	0.00E+00	0.00E+00	1.83E-21	7.81E-16	2.66E-14	1.83E-21	7.81E-16	2.66E-14
^{238}U	0.00E+00	0.00E+00	0.00E+00	2.12E-20	9.04E-15	5.93E-11	2.12E-20	9.04E-15	5.93E-11

(1) All radionuclides in gaseous streams are assumed to exist as solid particulate

CAS Comp	Organic Components				
Unit	mol/L	Lb/gal	Lb/day	Mt/day	g/sec
Total	1.20E-08	2.50E-08	2.82E-03	1.28E-06	1.48E-05
50-32-8	5.98E-09	1.26E-08	1.42E-03	6.40E-07	7.48E-06
58-23-5	0.00E+00	0.00E+00	0.00E+00	0.00E+00	0.00E+00
57-14-7	0.00E+00	0.00E+00	0.00E+00	0.00E+00	0.00E+00
58-90-2	0.00E+00	0.00E+00	0.00E+00	0.00E+00	0.00E+00
59-89-2	0.00E+00	0.00E+00	0.00E+00	0.00E+00	0.00E+00
60-35-5	0.00E+00	0.00E+00	0.00E+00	0.00E+00	0.00E+00
62-75-9	0.00E+00	0.00E+00	0.00E+00	0.00E+00	0.00E+00
64-19-7	0.00E+00	0.00E+00	0.00E+00	0.00E+00	0.00E+00
71-43-2	0.00E+00	0.00E+00	0.00E+00	0.00E+00	0.00E+00
75-05-8	0.00E+00	0.00E+00	0.00E+00	0.00E+00	0.00E+00
75-12-7	0.00E+00	0.00E+00	0.00E+00	0.00E+00	0.00E+00
78-15-3	0.00E+00	0.00E+00	0.00E+00	0.00E+00	0.00E+00
79-01-6	0.00E+00	0.00E+00	0.00E+00	0.00E+00	0.00E+00
83-32-9	0.00E+00	0.00E+00	0.00E+00	0.00E+00	0.00E+00
84-66-2	0.00E+00	0.00E+00	0.00E+00	0.00E+00	0.00E+00
84-74-2	4.07E-08	9.46E-09	1.07E-03	4.85E-07	5.61E-06
87-68-3	0.00E+00	0.00E+00	0.00E+00	0.00E+00	0.00E+00
88-89-1	7.85E-27	1.50E-26	1.69E-21	7.70E-25	8.91E-24
91-20-3	0.00E+00	0.00E+00	0.00E+00	0.00E+00	0.00E+00
95-50-1	0.00E+00	0.00E+00	0.00E+00	0.00E+00	0.00E+00
98-86-2	0.00E+00	0.00E+00	0.00E+00	0.00E+00	0.00E+00
100-21-0	1.36E-13	1.89E-13	2.13E-08	9.70E-12	1.12E-10
101-84-8	0.00E+00	0.00E+00	0.00E+00	0.00E+00	0.00E+00
106-93-4	0.00E+00	0.00E+00	0.00E+00	0.00E+00	0.00E+00
106-97-8	0.00E+00	0.00E+00	0.00E+00	0.00E+00	0.00E+00
106-99-0	0.00E+00	0.00E+00	0.00E+00	0.00E+00	0.00E+00
108-87-2	0.00E+00	0.00E+00	0.00E+00	0.00E+00	0.00E+00
108-88-3	0.00E+00	0.00E+00	0.00E+00	0.00E+00	0.00E+00
108-95-2	0.00E+00	0.00E+00	0.00E+00	0.00E+00	0.00E+00
110-54-3	0.00E+00	0.00E+00	0.00E+00	0.00E+00	0.00E+00
110-82-7	0.00E+00	0.00E+00	0.00E+00	0.00E+00	0.00E+00
111-84-2	0.00E+00	0.00E+00	0.00E+00	0.00E+00	0.00E+00
120-12-7	2.68E-11	4.28E-11	4.83E-06	2.19E-09	2.54E-08
120-82-1	0.00E+00	0.00E+00	0.00E+00	0.00E+00	0.00E+00
122-39-4	1.15E-08	1.62E-08	1.83E-04	8.30E-06	9.61E-07
126-73-8	0.00E+00	0.00E+00	0.00E+00	0.00E+00	0.00E+00
127-18-4	0.00E+00	0.00E+00	0.00E+00	0.00E+00	0.00E+00
129-00-0	7.53E-10	1.27E-09	1.43E-04	6.51E-08	7.54E-07
132-64-9	0.00E+00	0.00E+00	0.00E+00	0.00E+00	0.00E+00
144-62-7	0.00E+00	0.00E+00	0.00E+00	0.00E+00	0.00E+00
193-39-5	1.92E-14	4.43E-14	4.99E-09	2.27E-12	2.63E-11
206-44-0	0.00E+00	0.00E+00	0.00E+00	0.00E+00	0.00E+00
208-96-8	0.00E+00	0.00E+00	0.00E+00	0.00E+00	0.00E+00
603-34-9	0.00E+00	0.00E+00	0.00E+00	0.00E+00	0.00E+00
621-64-7	0.00E+00	0.00E+00	0.00E+00	0.00E+00	0.00E+00
1321-64-8	0.00E+00	0.00E+00	0.00E+00	0.00E+00	0.00E+00
1336-36-3	1.50E-15	4.04E-15	4.56E-10	2.07E-13	2.40E-12
3697-24-3	0.00E+00	0.00E+00	0.00E+00	0.00E+00	0.00E+00
4170-30-3	0.00E+00	0.00E+00	0.00E+00	0.00E+00	0.00E+00
10061-01-5	0.00E+00	0.00E+00	0.00E+00	0.00E+00	0.00E+00
26140-60-3	0.00E+00	0.00E+00	0.00E+00	0.00E+00	0.00E+00

Table A-11 HMP06 Stream Report

Stream Number: HMP06
Stream Name: Melter offgas (primary)
Configuration: MRQ-05-0049.ecmf
Run Date / Time: 12/14/2005 - 1:42:25 PM
Run Data File: H:\ACM v8.1\MRQ-05-0049\MRQ_05_0049A_Streams.csv

Variable	Value	Units	
Density	4.13E-04	g/cm³	(does not include solid phase)
Enthalpy	-4.44E+06	BTU/hr	
Mass Flow	2.21E+03	Lb/hr	
	5.31E+04	Lb/day	
Volumetric Flow	1.06E+04	GPM	(does not include solid phase)
	1.42E+03	ft³/min	(does not include solid phase)
Molar Flow	9.24E+01	Lbmol/hr	
Molecular Weight	2.39E+01	Lb/Lbmol	
Pressure	9.76E+02	mbar	
Temperature	4.00E+02	C	
Na Molarity	0.00E+00	mol/L	
pH	0.00E+00	pH	
Total TRU	3.25E-07	Ci/L	
Total Activity	1.07E-04	Ci/L	

Component	Aqueous Comp			Solid Comp	Gaseous (1)		Total Comp		
Unit	mol/L	Lb/gal	Lb/day	Lb/day	mol/L	Lb/day	Lb/day	mt/day	g/sec
Total	0.00E+00	0.00E+00	0.00E+00	1.33E+02	1.74E-02	5.25E+04	5.26E+04	2.39E+01	2.77E+02
Ag^{+}	0.00E+00	0.00E+00	0.00E+00	1.21E-01	0.00E+00	0.00E+00	1.21E-01	5.50E-05	6.37E-04
Al^{+3}	0.00E+00	0.00E+00	0.00E+00	6.36E+00	0.00E+00	0.00E+00	6.36E+00	2.89E-03	3.34E-02
As^{+3}	0.00E+00	0.00E+00	0.00E+00	1.28E-02	0.00E+00	0.00E+00	1.28E-02	5.80E-06	6.72E-05
B^{+3}	0.00E+00	0.00E+00	0.00E+00	1.13E+01	0.00E+00	0.00E+00	1.13E+01	5.13E-03	5.93E-02
Ba^{+2}	0.00E+00	0.00E+00	0.00E+00	3.24E-02	0.00E+00	0.00E+00	3.24E-02	1.47E-05	1.71E-04
Bi^{+3}	0.00E+00	0.00E+00	0.00E+00	2.92E-01	0.00E+00	0.00E+00	2.92E-01	1.33E-04	1.54E-03
Ca^{+2}	0.00E+00	0.00E+00	0.00E+00	2.67E-01	0.00E+00	0.00E+00	2.67E-01	1.21E-04	1.40E-03
Cd^{+2}	0.00E+00	0.00E+00	0.00E+00	1.31E+00	0.00E+00	0.00E+00	1.31E+00	5.94E-04	6.88E-03
Ce^{+3}	0.00E+00	0.00E+00	0.00E+00	2.32E-02	0.00E+00	0.00E+00	2.32E-02	1.05E-05	1.22E-04
Cl	0.00E+00	0.00E+00	0.00E+00	0.00E+00	0.00E+00	0.00E+00	0.00E+00	0.00E+00	0.00E+00
CO	0.00E+00	0.00E+00	0.00E+00	0.00E+00	1.59E-06	5.65E+00	5.65E+00	2.57E-03	2.97E-02
CO_2	0.00E+00	0.00E+00	0.00E+00	0.00E+00	1.59E-04	8.88E+02	8.88E+02	4.03E-01	4.67E+00
CO_3^{-2}	0.00E+00	0.00E+00	0.00E+00	0.00E+00	0.00E+00	0.00E+00	0.00E+00	0.00E+00	0.00E+00
Cr^{+3}	0.00E+00	0.00E+00	0.00E+00	1.17E-01	0.00E+00	0.00E+00	1.17E-01	5.32E-05	6.16E-04
Cu^{+2}	0.00E+00	0.00E+00	0.00E+00	8.13E-03	0.00E+00	0.00E+00	8.13E-03	3.69E-06	4.27E-05
F^{-}	0.00E+00	0.00E+00	0.00E+00	0.00E+00	0.00E+00	0.00E+00	0.00E+00	0.00E+00	0.00E+00
Fe^{+3}	0.00E+00	0.00E+00	0.00E+00	4.83E+00	0.00E+00	0.00E+00	4.83E+00	2.20E-03	2.54E-02
H_2O	0.00E+00	0.00E+00	0.00E+00	0.00E+00	8.70E-03	1.99E+04	1.99E+04	9.07E+00	1.05E+02
$H_2O(b)$	0.00E+00	0.00E+00	0.00E+00	0.00E+00	0.00E+00	0.00E+00	0.00E+00	0.00E+00	0.00E+00
H^{+}	0.00E+00	0.00E+00	0.00E+00	0.00E+00	0.00E+00	0.00E+00	0.00E+00	0.00E+00	0.00E+00
HCL	0.00E+00	0.00E+00	0.00E+00	0.00E+00	1.38E-06	6.43E+00	6.43E+00	2.92E-03	3.38E-02
HCO3-	0.00E+00	0.00E+00	0.00E+00	7.99E-21	0.00E+00	0.00E+00	7.99E-21	3.63E-24	4.21E-23
H2CO3	0.00E+00	0.00E+00	0.00E+00	0.00E+00	0.00E+00	0.00E+00	0.00E+00	0.00E+00	0.00E+00
HF	0.00E+00	0.00E+00	0.00E+00	0.00E+00	7.57E-06	1.93E+01	1.93E+01	8.76E-03	1.01E-01
Hg^{+2}	0.00E+00	0.00E+00	0.00E+00	7.49E+00	0.00E+00	0.00E+00	7.49E+00	3.41E-03	3.94E-02
HNO_3	0.00E+00	0.00E+00	0.00E+00	0.00E+00	0.00E+00	0.00E+00	0.00E+00	0.00E+00	0.00E+00
K^{+}	0.00E+00	0.00E+00	0.00E+00	1.61E+00	0.00E+00	0.00E+00	1.61E+00	7.31E-04	8.47E-03
La^{+3}	0.00E+00	0.00E+00	0.00E+00	1.21E-01	0.00E+00	0.00E+00	1.21E-01	5.51E-05	6.38E-04
Li^{+}	0.00E+00	0.00E+00	0.00E+00	1.40E+00	0.00E+00	0.00E+00	1.40E+00	6.38E-04	7.38E-03
Mg^{+2}	0.00E+00	0.00E+00	0.00E+00	7.81E-02	0.00E+00	0.00E+00	7.81E-02	3.55E-05	4.11E-04
Mn^{+3}	0.00E+00	0.00E+00	0.00E+00	6.33E-01	0.00E+00	0.00E+00	6.33E-01	2.88E-04	3.33E-03
MnO_4	0.00E+00	0.00E+00	0.00E+00	0.00E+00	0.00E+00	0.00E+00	0.00E+00	0.00E+00	0.00E+00
N_2	0.00E+00	0.00E+00	0.00E+00	0.00E+00	6.45E-03	2.30E+04	2.30E+04	1.05E+01	1.21E+02
Na^{+}	0.00E+00	0.00E+00	0.00E+00	1.26E+01	0.00E+00	0.00E+00	1.26E+01	5.72E-03	6.62E-02
NH3	0.00E+00	0.00E+00	0.00E+00	0.00E+00	1.10E-06	2.51E+00	2.51E+00	1.14E-03	1.32E-02
NH4+	0.00E+00	0.00E+00	0.00E+00	1.23E-17	0.00E+00	0.00E+00	1.23E-17	5.58E-21	6.46E-20
Ni^{+2}	0.00E+00	0.00E+00	0.00E+00	2.39E-01	0.00E+00	0.00E+00	2.39E-01	1.08E-04	1.26E-03
NO	0.00E+00	0.00E+00	0.00E+00	0.00E+00	1.04E-04	3.96E+02	3.96E+02	1.80E-01	2.08E+00
NO_2	0.00E+00	0.00E+00	0.00E+00	0.00E+00	9.70E-06	5.68E+01	5.68E+01	2.58E-02	2.98E-01
NO_3	0.00E+00	0.00E+00	0.00E+00	0.00E+00	0.00E+00	0.00E+00	0.00E+00	0.00E+00	0.00E+00
NO_3	0.00E+00	0.00E+00	0.00E+00	0.00E+00	0.00E+00	0.00E+00	0.00E+00	0.00E+00	0.00E+00
O_2	0.00E+00	0.00E+00	0.00E+00	0.00E+00	2.00E-03	8.14E+03	8.14E+03	3.70E+00	4.28E+01
O^{-}	0.00E+00	0.00E+00	0.00E+00	4.98E+01	0.00E+00	0.00E+00	4.98E+01	2.27E-02	2.62E-01
OH^{-}	0.00E+00	0.00E+00	0.00E+00	0.00E+00	0.00E+00	0.00E+00	0.00E+00	0.00E+00	0.00E+00
OH(b)	0.00E+00	0.00E+00	0.00E+00	0.00E+00	0.00E+00	0.00E+00	0.00E+00	0.00E+00	0.00E+00
Pb^{+2}	0.00E+00	0.00E+00	0.00E+00	3.48E-01	0.00E+00	0.00E+00	3.48E-01	1.58E-04	1.83E-03
Pd^{+2}	0.00E+00	0.00E+00	0.00E+00	5.71E-03	0.00E+00	0.00E+00	5.71E-03	2.60E-06	3.01E-05
PO_4^{-3}	0.00E+00	0.00E+00	0.00E+00	3.24E+00	0.00E+00	0.00E+00	3.24E+00	1.47E-03	1.71E-02
Resin	0.00E+00	0.00E+00	0.00E+00	0.00E+00	0.00E+00	0.00E+00	0.00E+00	0.00E+00	0.00E+00
Rh^{+3}	0.00E+00	0.00E+00	0.00E+00	1.01E-02	0.00E+00	0.00E+00	1.01E-02	4.58E-06	5.30E-05
Ru^{+3}	0.00E+00	0.00E+00	0.00E+00	8.86E-01	0.00E+00	0.00E+00	8.86E-01	3.94E-04	4.56E-03
S^{+6}	0.00E+00	0.00E+00	0.00E+00	0.00E+00	0.00E+00	0.00E+00	0.00E+00	0.00E+00	0.00E+00
SiO2	0.00E+00	0.00E+00	0.00E+00	2.74E+01	0.00E+00	0.00E+00	2.74E+01	1.24E-02	1.44E-01
SiO_4^{-4}	0.00E+00	0.00E+00	0.00E+00	9.04E-09	0.00E+00	0.00E+00	9.04E-09	4.11E-12	4.76E-11
SO_2	0.00E+00	0.00E+00	0.00E+00	0.00E+00	1.76E-06	1.43E+01	1.43E+01	6.52E-03	7.54E-02
SO_4^{-2}	0.00E+00	0.00E+00	0.00E+00	0.00E+00	0.00E+00	0.00E+00	0.00E+00	0.00E+00	0.00E+00
Sr^{+2}	0.00E+00	0.00E+00	0.00E+00	1.81E-02	0.00E+00	0.00E+00	1.81E-02	8.21E-06	9.51E-05
Sucrose	0.00E+00	0.00E+00	0.00E+00	0.00E+00	0.00E+00	0.00E+00	0.00E+00	0.00E+00	0.00E+00
Ti^{+4}	0.00E+00	0.00E+00	0.00E+00	1.65E-03	0.00E+00	0.00E+00	1.65E-03	7.51E-07	8.69E-06
Zn^{+2}	0.00E+00	0.00E+00	0.00E+00	1.53E+00	0.00E+00	0.00E+00	1.53E+00	6.97E-04	8.07E-03
Zr^{+4}	0.00E+00	0.00E+00	0.00E+00	7.68E-01	0.00E+00	0.00E+00	7.68E-01	3.49E-04	4.04E-03

Components	Aqueous Comp			Solid Comp	Gaseous		Total Comp		
Unit	mol/L	Lb/gal	Lb/day	Lb/day	mol/L	Lb/day	Lb/day	Mt/day	g/sec
Total	0.00E+00	0.00E+00	0.00E+00	4.79E-02	0.00E+00	0.00E+00	4.79E-02	2.18E-01	2.52E+00

$C_2O_4^{2-}$	0.00E+00	0.00E+00	0.00E+00	4.79E+02	0.00E+00	0.00E+00	4.79E+02	2.18E-01	2.52E+00
Formate	0.00E+00	0.00E+00	0.00E+00	9.17E-08	0.00E+00	0.00E+00	9.17E-08	4.17E-11	4.82E-10
Acetate	0.00E+00	0.00E+00	0.00E+00	9.32E-08	0.00E+00	0.00E+00	9.32E-08	4.23E-11	4.90E-10
Glycolate	0.00E+00	0.00E+00	0.00E+00	4.58E-08	0.00E+00	0.00E+00	4.58E-08	2.08E-11	2.41E-10
IDA	0.00E+00	0.00E+00	0.00E+00	1.17E-07	0.00E+00	0.00E+00	1.17E-07	5.31E-11	6.15E-10
Citrate	0.00E+00	0.00E+00	0.00E+00	1.00E-07	0.00E+00	0.00E+00	1.00E-07	4.56E-11	5.28E-10
HEDTA	0.00E+00	0.00E+00	0.00E+00	8.22E-08	0.00E+00	0.00E+00	8.22E-08	3.74E-11	4.33E-10
EDTA	0.00E+00	0.00E+00	0.00E+00	8.84E-08	0.00E+00	0.00E+00	8.84E-08	4.02E-11	4.65E-10

Rad. Comp	Aqueous Rad. Comp			Solids Rad. Comp (1)			Total Rad. Comp (1)		
Unit	Ci/L	Ci/day	Lb/day	Ci/L	Ci/day	Lb/day	Ci/L	Ci/day	Lb/day
Total	0.00E+00	0.00E+00	0.00E+00	1.07E-04	6.18E+03	2.12E+01	1.07E-04	6.18E+03	2.12E+01
^{241}Am	0.00E+00	0.00E+00	0.00E+00	2.57E-07	1.48E+01	9.55E-03	2.57E-07	1.48E+01	9.55E-03
^{243}Am	0.00E+00	0.00E+00	0.00E+00	2.09E-11	1.20E-03	1.33E-05	2.09E-11	1.20E-03	1.33E-05
^{14}C	0.00E+00	0.00E+00	0.00E+00	1.22E-09	7.01E-02	3.46E-05	1.22E-09	7.01E-02	3.46E-05
^{60}Co	0.00E+00	0.00E+00	0.00E+00	2.29E-08	1.32E+00	2.58E-05	2.29E-08	1.32E+00	2.58E-05
^{243}Cm	0.00E+00	0.00E+00	0.00E+00	2.90E-10	1.67E-02	7.29E-07	2.90E-10	1.67E-02	7.29E-07
^{244}Cm	0.00E+00	0.00E+00	0.00E+00	6.58E-09	3.80E-01	1.04E-05	6.58E-09	3.80E-01	1.04E-05
^{137}Cs	0.00E+00	0.00E+00	0.00E+00	8.84E-05	5.10E+03	1.30E-01	8.84E-05	5.10E+03	1.30E-01
^{152}Eu	0.00E+00	0.00E+00	0.00E+00	1.10E-08	6.36E-02	8.07E-07	1.10E-08	6.36E-02	8.07E-07
^{154}Eu	0.00E+00	0.00E+00	0.00E+00	1.20E-07	6.90E+00	5.63E-05	1.20E-07	6.90E+00	5.63E-05
^{155}Eu	0.00E+00	0.00E+00	0.00E+00	1.77E-08	1.02E+00	4.64E-06	1.77E-08	1.02E+00	4.64E-06
^{3}H	0.00E+00	0.00E+00	0.00E+00	2.96E-08	1.71E+00	3.91E-07	2.96E-08	1.71E+00	3.91E-07
^{129}I	0.00E+00	0.00E+00	0.00E+00	5.18E-11	2.99E-03	3.73E-02	5.18E-11	2.99E-03	3.73E-02
^{63}Ni	0.00E+00	0.00E+00	0.00E+00	3.42E-09	1.98E-01	7.66E-06	3.42E-09	1.98E-01	7.66E-06
^{237}Np	0.00E+00	0.00E+00	0.00E+00	1.70E-10	9.79E-03	3.06E-02	1.70E-10	9.79E-03	3.06E-02
^{238}Pu	0.00E+00	0.00E+00	0.00E+00	8.05E-10	4.65E-02	5.98E-06	8.05E-10	4.65E-02	5.98E-06
^{239}Pu	0.00E+00	0.00E+00	0.00E+00	7.13E-09	4.12E-01	1.46E-02	7.13E-09	4.12E-01	1.46E-02
^{240}Pu	0.00E+00	0.00E+00	0.00E+00	1.88E-09	1.09E-01	1.06E-03	1.88E-09	1.09E-01	1.06E-03
^{241}Pu	0.00E+00	0.00E+00	0.00E+00	5.05E-08	2.92E+00	6.24E-05	5.05E-08	2.92E+00	6.24E-05
^{242}Pu	0.00E+00	0.00E+00	0.00E+00	1.73E-13	1.00E-05	5.60E-06	1.73E-13	1.00E-05	5.60E-06
^{125}Sb	0.00E+00	0.00E+00	0.00E+00	5.28E-08	3.05E+00	6.47E-06	5.28E-08	3.05E+00	6.47E-06
^{151}Sm	0.00E+00	0.00E+00	0.00E+00	4.92E-07	2.84E+01	2.38E-03	4.92E-07	2.84E+01	2.38E-03
^{126}Sn	0.00E+00	0.00E+00	0.00E+00	2.07E-10	1.19E-02	2.32E-03	2.07E-10	1.19E-02	2.32E-03
^{90}Sr	0.00E+00	0.00E+00	0.00E+00	1.64E-05	9.44E+02	1.51E-02	1.64E-05	9.44E+02	1.51E-02
^{99}Tc	0.00E+00	0.00E+00	0.00E+00	1.23E-08	7.12E+01	9.26E+00	1.23E-08	7.12E+01	9.26E+00
^{232}Th	0.00E+00	0.00E+00	0.00E+00	5.61E-12	3.24E-04	6.49E+00	5.61E-12	3.24E-04	6.49E+00
^{233}U	0.00E+00	0.00E+00	0.00E+00	4.59E-10	2.65E-02	6.06E-03	4.59E-10	2.65E-02	6.06E-03
^{234}U	0.00E+00	0.00E+00	0.00E+00	2.39E-11	1.38E-03	4.91E-04	2.39E-11	1.38E-03	4.91E-04
^{235}U	0.00E+00	0.00E+00	0.00E+00	5.76E-13	3.32E-05	3.39E-02	5.76E-13	3.32E-05	3.39E-02
^{236}U	0.00E+00	0.00E+00	0.00E+00	7.93E-13	4.57E-05	1.56E-03	7.93E-13	4.57E-05	1.56E-03
^{238}U	0.00E+00	0.00E+00	0.00E+00	1.36E-11	7.82E-04	5.13E+00	1.36E-11	7.82E-04	5.13E+00

(1) All radionuclides in gaseous streams are assumed to exist as solid particulate.

CAS Comp	Organic Components				
Unit	mol/L	Lb/gal	Lb/day	Mb/day	g/sec
Total	1.99E-06	1.54E-06	2.34E-01	1.07E-02	1.23E-01
50-32-8	9.41E-09	1.98E-08	3.02E-01	1.37E-04	1.58E-03
56-23-5	6.24E-29	8.01E-29	1.22E-21	5.55E-25	6.42E-24
57-14-7	6.36E-10	3.19E-10	4.86E-03	2.21E-06	2.56E-05
58-90-2	3.23E-10	8.25E-10	9.52E-03	4.33E-06	5.01E-05
59-89-2	9.53E-17	9.24E-17	1.41E-09	6.40E-13	7.41E-12
60-35-5	9.14E-09	4.51E-09	6.87E-02	3.12E-05	3.61E-04
62-75-9	1.17E-08	7.27E-09	1.11E-01	5.03E-05	5.83E-04
64-19-7	6.65E-14	3.33E-14	5.08E-07	2.31E-10	2.67E-09
71-43-2	2.84E-22	1.85E-22	2.82E-15	1.28E-18	1.48E-17
75-05-8	1.56E-11	5.35E-12	8.16E-05	3.71E-08	4.29E-07
75-12-7	7.17E-06	2.69E-06	4.11E-01	1.87E-04	2.16E-03
76-15-3	0.00E+00	0.00E+00	0.00E+00	0.00E+00	0.00E+00
79-01-6	6.12E-24	8.90E-24	1.36E-16	6.17E-20	7.14E-19
83-32-9	7.11E-17	9.16E-17	1.40E-09	6.34E-13	7.34E-12
84-66-2	1.05E-08	1.95E-08	2.97E-01	1.35E-04	1.56E-03
84-74-2	3.71E-09	8.63E-09	1.31E-01	5.98E-05	6.92E-04
87-86-3	2.84E-24	6.19E-24	9.44E-17	4.29E-20	4.96E-19
88-89-1	1.41E-06	2.70E-06	4.11E-01	1.87E-04	2.16E-03
91-20-3	1.51E-16	1.61E-16	2.45E-09	1.12E-12	1.29E-11
95-50-1	4.97E-18	6.10E-18	9.29E-11	4.22E-14	4.89E-13
98-86-2	3.04E-10	3.06E-10	4.66E-03	2.12E-06	2.45E-05
100-21-0	2.05E-08	2.84E-08	4.33E-01	1.97E-04	2.28E-03
101-84-8	1.07E-17	1.53E-17	2.33E-10	1.06E-13	1.22E-12
106-93-4	2.86E-17	4.49E-17	6.84E-10	3.11E-13	3.60E-12
106-97-8	0.00E+00	0.00E+00	0.00E+00	0.00E+00	0.00E+00
108-99-0	0.00E+00	0.00E+00	0.00E+00	0.00E+00	0.00E+00
108-87-2	0.00E+00	0.00E+00	0.00E+00	0.00E+00	0.00E+00
108-88-3	7.01E-23	5.39E-23	8.22E-16	3.74E-19	4.32E-18
108-95-2	3.10E-08	2.44E-08	3.71E-01	1.69E-04	1.95E-03
110-54-3	0.00E+00	0.00E+00	0.00E+00	0.00E+00	0.00E+00
110-82-7	0.00E+00	0.00E+00	0.00E+00	0.00E+00	0.00E+00
111-84-2	0.00E+00	0.00E+00	0.00E+00	0.00E+00	0.00E+00
120-12-7	6.09E-12	9.06E-12	1.38E-04	6.28E-08	7.26E-07
120-82-1	1.39E-18	2.11E-18	3.21E-11	1.48E-14	1.69E-13
122-39-4	7.67E-10	1.06E-09	1.65E-02	7.50E-06	8.68E-05
126-73-8	8.48E-09	1.89E-08	2.87E-01	1.31E-04	1.51E-03
127-18-4	1.07E-26	1.49E-26	2.27E-21	1.03E-24	1.19E-23
129-00-0	2.56E-10	4.31E-10	6.58E-03	2.99E-06	3.46E-05
132-64-9	7.40E-14	1.04E-13	1.58E-06	7.20E-10	8.33E-09
144-62-7	1.79E-08	1.35E-08	2.05E+01	9.34E-03	1.08E-01
193-39-5	1.53E-15	3.54E-15	5.40E-08	2.45E-11	2.84E-10
206-44-0	5.48E-17	9.21E-17	1.40E-09	6.38E-13	7.38E-12
208-96-8	8.00E-13	1.02E-12	1.55E-05	7.04E-09	8.15E-08
603-34-9	7.38E-10	1.51E-09	2.30E-02	1.05E-05	1.21E-04
621-64-7	8.48E-17	9.21E-17	1.40E-09	6.38E-13	7.38E-12
1321-64-8	3.06E-17	9.17E-17	1.40E-09	6.35E-13	7.35E-12
1336-36-3	9.75E-16	2.62E-15	3.99E-08	1.82E-11	2.10E-10
3697-24-3	4.56E-17	9.22E-17	1.41E-09	6.39E-13	7.40E-12
4170-30-3	1.50E-10	8.75E-11	1.33E-03	6.08E-07	7.02E-06
10061-01-5	2.04E-20	1.89E-20	2.87E-13	1.31E-16	1.51E-15
26140-60-3	4.79E-17	9.20E-17	1.40E-09	6.37E-13	7.36E-12

BY E. Berrios
DATE: 01/09/06

Table A-12 HOP10 Stream Report

Stream Number: HOP10
Stream Name: HLW vessel ventilation header offgas
Configuration: MRQ-05-0049.acmf
Run Date / Time: 12/14/2005 - 1:42:25 PM
Run Data File: H:\ACM v3.1\MRQ-05-0049\MRQ_05_0049A_Streams.csv

Variable	Value	Units	
Density	1.15E-03	g/cm^3	(does not include solid phase)
Enthalpy	-1.25E+05	BTU/hr	
Mass Flow	1.15E+03	Lb/hr	
	2.76E+04	Lb/day	
Volumetric Flow	2.00E+03	GPM	(does not include solid phase)
	2.67E+02	ft^3/min	(does not include solid phase)
Molar Flow	4.03E+01	Lbmol/hr	
Molecular Weight	2.85E+01	Lb/Lbmol	
Pressure	1.00E+03	mbar	
Temperature	2.56E+01	C	
Na Molarity	0.00E+00	mol/L	
pH	5.25E+00	pH	
Total TRU	2.10E-11	Ci/L	
Total Activity	4.66E-09	Ci/L	

Component	Aqueous Comp			Solid Comp	Gaseous (1)		Total Comp		
Unit	mol/L	Lb/gal	Lb/day	Lb/day	mol/L	Lb/day	Lb/day	mt/day	g/sec
Total	4.95E-07	7.58E-08	2.18E-01	3.02E-03	4.03E-02	2.76E+04	2.76E+04	1.25E+01	1.45E+02
Ag^+	8.93E-18	8.04E-18	2.31E-09	7.25E-07	0.00E+00	0.00E+00	7.27E-07	3.31E-10	3.83E-09
Al^{+3}	1.08E-11	2.43E-12	7.00E-06	1.20E-04	0.00E+00	0.00E+00	1.27E-04	5.78E-08	6.69E-07
As^{+3}	3.94E-15	2.46E-15	7.09E-09	4.67E-06	0.00E+00	0.00E+00	5.37E-06	2.44E-11	2.83E-10
B^{+3}	6.05E-12	5.46E-13	1.57E-06	6.62E-05	0.00E+00	0.00E+00	6.78E-05	3.08E-09	3.57E-07
Ba^{+2}	8.21E-16	9.41E-16	2.71E-09	6.46E-07	0.00E+00	0.00E+00	6.49E-07	2.95E-10	3.41E-09
Bi^{+3}	9.65E-16	1.88E-15	4.84E-09	3.39E-06	0.00E+00	0.00E+00	3.40E-06	1.54E-09	1.79E-08
Ca^{+2}	5.88E-14	1.97E-14	5.66E-08	3.95E-06	0.00E+00	0.00E+00	4.00E-06	1.82E-09	2.11E-08
Cd^{+2}	1.52E-15	1.43E-15	4.10E-09	2.62E-06	0.00E+00	0.00E+00	2.63E-06	1.19E-09	1.38E-08
Ce^{+3}	6.97E-11	8.15E-11	2.35E-04	8.05E-07	0.00E+00	0.00E+00	2.35E-04	1.07E-07	1.24E-06
Cf	3.29E-11	9.73E-12	2.80E-05	7.84E-07	0.00E+00	0.00E+00	2.88E-05	1.31E-08	1.51E-07
CO	9.78E-111	2.29E-111	6.57E-105	0.00E+00	0.00E+00	0.00E+00	6.57E-105	2.98E-104	3.46E-107
CO_2	7.54E-16	2.77E-16	7.96E-10	0.00E+00	1.18E-32	1.24E-26	7.96E-10	3.62E-13	4.19E-12
CO_3^{-2}	8.65E-12	4.33E-12	1.25E-05	2.19E-04	0.00E+00	0.00E+00	2.31E-04	1.05E-07	1.22E-06
Cr^{+3}	5.22E-12	2.27E-12	6.52E-06	2.02E-06	0.00E+00	0.00E+00	8.54E-06	3.88E-09	4.49E-08
Cu^{+2}	1.51E-15	8.00E-16	2.30E-09	2.74E-07	0.00E+00	0.00E+00	2.76E-07	1.26E-10	1.45E-09
F	1.16E-12	1.84E-13	5.30E-07	1.43E-05	0.00E+00	0.00E+00	1.48E-05	6.72E-09	7.78E-09
Fe^{+3}	1.73E-11	8.07E-12	2.32E-05	1.16E-04	0.00E+00	0.00E+00	1.39E-04	6.33E-08	7.32E-07
H_2O	4.85E-07	7.29E-08	2.10E-01	0.00E+00	1.21E-03	5.22E+02	5.22E+02	2.37E-01	2.74E+00
$H_2O(b)$	0.00E+00	0.00E+00	0.00E+00	0.00E+00	0.00E+00	0.00E+00	0.00E+00	0.00E+00	0.00E+00
H^+	2.73E-12	2.29E-14	6.60E-08	0.00E+00	0.00E+00	0.00E+00	6.60E-08	3.00E-11	3.47E-10
HCL	0.00E+00	0.00E+00	0.00E+00	0.00E+00	0.00E+00	0.00E+00	0.00E+00	0.00E+00	0.00E+00
HCO3-	6.88E-15	3.50E-15	1.01E-08	0.00E+00	0.00E+00	0.00E+00	1.01E-08	4.58E-12	5.30E-11
H2CO3	0.00E+00	0.00E+00	0.00E+00	0.00E+00	0.00E+00	0.00E+00	0.00E+00	0.00E+00	0.00E+00
HF	0.00E+00	0.00E+00	0.00E+00	0.00E+00	0.00E+00	0.00E+00	0.00E+00	0.00E+00	0.00E+00
Hg^{+2}	1.58E-15	2.65E-15	7.61E-09	1.55E-06	0.00E+00	0.00E+00	1.55E-06	7.08E-10	8.17E-09
HNO_3	0.00E+00	0.00E+00	0.00E+00	0.00E+00	0.00E+00	0.00E+00	0.00E+00	0.00E+00	0.00E+00
K^+	4.51E-12	1.47E-12	4.23E-06	2.22E-06	0.00E+00	0.00E+00	6.45E-06	2.93E-09	3.40E-08
La^{+3}	4.19E-16	4.85E-16	1.40E-09	1.21E-06	0.00E+00	0.00E+00	1.21E-06	5.52E-10	6.39E-09
Li^+	7.45E-14	4.31E-15	1.24E-08	2.81E-05	0.00E+00	0.00E+00	2.81E-05	1.28E-08	1.48E-07
Mg^{+2}	1.24E-14	2.53E-15	7.26E-09	9.77E-07	0.00E+00	0.00E+00	9.85E-07	4.48E-10	5.18E-09
Mn^{+2}	1.35E-14	6.19E-15	1.78E-08	9.48E-06	0.00E+00	0.00E+00	9.50E-06	4.32E-09	5.00E-08
MnO_4^-	0.00E+00	0.00E+00	0.00E+00	0.00E+00	0.00E+00	0.00E+00	0.00E+00	0.00E+00	0.00E+00
N_2	3.51E-13	8.20E-14	2.36E-07	0.00E+00	3.09E-02	2.07E+04	2.07E+04	9.43E+00	1.09E+02
Na^+	4.70E-09	9.02E-10	2.59E-03	1.74E-04	0.00E+00	0.00E+00	2.77E-03	1.26E-06	1.46E-05
NH3	5.72E-13	8.13E-14	2.34E-07	0.00E+00	0.00E+00	0.00E+00	2.34E-07	1.06E-10	1.23E-09
NH4+	4.59E-14	8.13E-14	1.99E-08	0.00E+00	0.00E+00	0.00E+00	1.99E-08	9.03E-12	1.04E-10
Ni^{+2}	2.36E-12	1.16E-12	3.33E-06	4.22E-06	0.00E+00	0.00E+00	7.55E-06	3.43E-09	3.97E-08
NO	6.16E-36	1.54E-36	4.44E-30	0.00E+00	0.00E+00	0.00E+00	4.44E-30	2.02E-33	2.33E-32
NO_3	8.69E-49	3.34E-49	9.59E-43	0.00E+00	0.00E+00	0.00E+00	9.59E-43	4.36E-46	5.05E-45
NO_2	2.35E-11	9.01E-12	2.59E-05	3.97E-05	0.00E+00	0.00E+00	6.56E-05	2.98E-08	3.45E-07
NO_3	3.14E-09	1.62E-09	4.67E-03	3.06E-05	0.00E+00	0.00E+00	4.70E-03	2.14E-09	2.47E-05
O_2	1.13E-13	3.02E-14	8.69E-08	0.00E+00	8.20E-03	6.30E+03	6.30E+03	2.86E+00	3.31E+01
O^-	0.00E+00	0.00E+00	0.00E+00	1.91E-04	0.00E+00	0.00E+00	1.91E-04	8.68E-08	1.00E-06
OH	1.80E-09	2.55E-10	7.33E-04	6.29E-04	0.00E+00	0.00E+00	1.36E-03	6.19E-07	7.16E-06
OH(b)	2.39E-11	3.40E-12	9.77E-06	3.96E-26	0.00E+00	0.00E+00	9.77E-06	4.44E-09	5.14E-08
Pb^{+2}	5.52E-15	9.54E-15	2.74E-08	5.54E-06	0.00E+00	0.00E+00	5.57E-06	2.53E-09	2.93E-08
Pd^{+2}	4.27E-18	3.79E-18	1.09E-09	2.27E-07	0.00E+00	0.00E+00	2.29E-07	1.04E-10	1.20E-09
PO_4^{-3}	4.42E-13	3.50E-13	1.01E-06	2.50E-05	0.00E+00	0.00E+00	2.60E-05	1.18E-08	1.37E-07
Resin	0.00E+00	0.00E+00	0.00E+00	0.00E+00	0.00E+00	0.00E+00	0.00E+00	0.00E+00	0.00E+00
Rh^{+3}	4.13E-16	3.54E-16	1.02E-09	7.36E-08	0.00E+00	0.00E+00	7.46E-08	3.39E-11	3.93E-10
Ru^{+3}	8.13E-16	5.17E-16	1.49E-09	6.83E-07	0.00E+00	0.00E+00	6.84E-07	3.11E-10	3.60E-09
S^{-2}	0.00E+00	0.00E+00	0.00E+00	1.70E-23	0.00E+00	0.00E+00	1.70E-23	7.75E-27	8.97E-26
SiO2	8.35E-14	4.19E-14	1.20E-07	1.26E-03	0.00E+00	0.00E+00	1.26E-03	5.72E-07	6.63E-06
SiO_4^{-4}	6.38E-26	4.90E-25	1.41E-18	4.37E-13	0.00E+00	0.00E+00	4.37E-13	1.99E-16	2.30E-15
SO_2	9.36E-52	5.00E-52	1.44E-45	0.00E+00	0.00E+00	0.00E+00	1.44E-45	6.54E-49	7.57E-48
SO_4^{-2}	1.05E-12	8.45E-13	2.43E-06	9.18E-06	0.00E+00	0.00E+00	1.16E-05	5.28E-09	6.11E-08
Sr^{+2}	2.77E-16	2.02E-16	5.82E-10	3.61E-07	0.00E+00	0.00E+00	3.62E-07	1.64E-10	1.90E-09
Sucrose	0.00E+00	0.00E+00	0.00E+00	0.00E+00	0.00E+00	0.00E+00	0.00E+00	0.00E+00	0.00E+00
Th^{+4}	6.88E-16	2.75E-16	7.91E-10	6.11E-07	0.00E+00	0.00E+00	6.11E-07	2.78E-10	3.22E-09
Zn^{+2}	2.57E-15	1.40E-15	4.04E-09	3.07E-05	0.00E+00	0.00E+00	3.07E-05	1.40E-08	1.62E-07
Zr^{+4}	1.90E-15	1.45E-15	4.18E-09	2.92E-05	0.00E+00	0.00E+00	2.92E-05	1.33E-08	1.54E-07

Components	Aqueous Comp			Solid Comp	Gaseous		Total Comp		
Unit	mol/L	Lb/gal	Lb/day	Lb/day	mol/L	Lb/day	Lb/day	Mt/day	g/sec
Total	5.56E-13	4.08E-13	1.17E-06	1.09E-04	0.00E+00	0.00E+00	1.10E-04	5.01E-08	5.80E-07

CALCULATION SHEET

BY E Berrios
DATE 01/09/06

PROJECT: WTP
JOB. NO.: 24590
CALC NO.: 24590-WTP-M4C-FRP-00005
SHEET REV: C
SHEET NO.: A-25

$C_2O_4^{-2}$	5.56E-13	4.08E-13	1.17E-08	1.09E-04	0.00E+00	0.00E+00	1.10E-04	5.01E-08	5.80E-07
Formate	3.96E-25	1.49E-25	4.27E-19	2.02E-14	0.00E+00	0.00E+00	2.02E-14	9.17E-18	1.06E-16
Acetate	3.07E-25	1.51E-25	4.34E-19	2.05E-14	0.00E+00	0.00E+00	2.05E-14	9.32E-18	1.08E-16
Glycolate	2.04E-24	1.28E-24	3.68E-18	1.01E-14	0.00E+00	0.00E+00	1.01E-14	4.58E-18	5.30E-17
IDA	9.56E-25	1.06E-24	3.05E-18	2.57E-14	0.00E+00	0.00E+00	2.57E-14	1.17E-17	1.35E-16
Citrate	8.73E-26	1.40E-25	4.03E-19	2.21E-14	0.00E+00	0.00E+00	2.21E-14	1.00E-17	1.16E-16
HEDTA	4.09E-25	9.50E-25	2.73E-18	1.81E-14	0.00E+00	0.00E+00	1.81E-14	8.22E-18	9.52E-17
EDTA	4.92E-26	1.20E-25	3.45E-19	1.94E-14	0.00E+00	0.00E+00	1.94E-14	8.84E-18	1.02E-16

Rad. Comp	Aqueous Rad. Comp			Solids Rad. Comp (1)			Total Rad. Comp (1)		
Unit	Ci/L	Ci/day	Lb/day	Ci/L	Ci/day	Lb/day	Ci/L	Ci/day	Lb/day
Total	2.46E-09	2.88E-02	1.03E-06	2.20E-09	2.39E-02	1.75E-04	4.66E-09	5.07E-02	1.78E-04
^{241}Am	8.37E-15	9.11E-08	5.86E-11	1.58E-11	1.72E-04	1.11E-07	1.58E-11	1.72E-04	1.11E-07
^{243}Am	5.47E-18	5.95E-11	6.58E-13	1.28E-15	1.39E-08	1.54E-10	1.28E-15	1.40E-08	1.54E-10
^{14}C	1.72E-16	1.87E-09	9.23E-13	1.12E-15	1.22E-08	6.00E-12	1.29E-15	1.40E-08	6.92E-12
^{60}Co	1.13E-15	1.23E-08	2.39E-14	1.75E-12	1.90E-05	3.71E-11	1.75E-12	1.90E-05	3.71E-11
^{243}Cm	9.07E-19	9.87E-12	4.31E-16	2.21E-14	2.41E-07	1.05E-11	2.21E-14	2.41E-07	1.05E-11
^{244}Cm	2.15E-17	2.34E-10	6.37E-15	5.03E-13	5.47E-06	1.49E-10	5.03E-13	5.48E-06	1.49E-10
^{137}Cs	2.48E-09	2.68E-02	6.80E-07	3.57E-10	3.89E-03	9.87E-06	2.82E-09	3.07E-02	7.78E-07
^{152}Eu	6.30E-17	6.86E-10	8.70E-15	8.41E-14	9.16E-07	1.16E-11	8.42E-14	9.17E-07	1.16E-11
^{154}Eu	1.31E-14	1.42E-07	1.16E-12	9.12E-12	9.92E-05	8.10E-10	9.13E-12	9.94E-05	8.11E-10
^{155}Eu	3.77E-15	4.11E-08	1.87E-13	1.35E-12	1.47E-05	6.67E-11	1.35E-12	1.47E-05	6.69E-11
^{3}H	3.68E-15	4.01E-08	9.20E-15	2.84E-14	3.10E-07	7.11E-14	3.21E-14	3.50E-07	8.03E-14
^{129}I	5.27E-16	5.73E-11	7.16E-10	5.54E-17	6.03E-10	7.52E-09	6.08E-17	6.60E-10	8.24E-09
^{93}Nb	2.02E-14	2.20E-07	8.54E-12	3.03E-13	3.30E-06	1.28E-10	3.23E-13	3.52E-06	1.37E-10
^{93m}Nb	6.65E-18	7.24E-11	2.27E-10	1.29E-14	1.41E-07	4.41E-07	1.30E-14	1.41E-07	4.41E-07
^{238}Pu	3.75E-17	4.08E-10	5.25E-14	8.15E-14	8.89E-07	8.61E-11	8.15E-14	8.70E-07	8.62E-11
^{239}Pu	5.18E-16	5.64E-09	2.00E-10	5.44E-13	5.93E-06	2.11E-07	5.45E-13	5.93E-06	2.11E-07
^{240}Pu	1.34E-16	1.46E-09	1.42E-11	1.44E-13	1.56E-06	1.52E-06	1.44E-13	1.57E-06	1.52E-06
^{241}Pu	2.82E-15	3.07E-08	6.57E-13	3.86E-12	4.20E-05	8.99E-10	3.86E-12	4.20E-05	8.99E-10
^{242}Pu	1.42E-20	1.55E-13	8.08E-14	1.32E-17	1.44E-10	8.08E-11	1.32E-17	1.44E-10	8.07E-11
^{125}Sb	7.80E-15	8.49E-08	1.80E-13	5.59E-12	6.09E-05	1.29E-10	5.60E-12	6.10E-05	1.30E-10
^{151}Sm	1.09E-13	1.19E-06	9.97E-11	6.77E-11	7.37E-04	6.17E-08	6.78E-11	7.38E-04	6.18E-08
^{126}Sn	1.24E-16	1.35E-09	2.82E-10	2.82E-14	2.85E-07	5.54E-08	2.83E-14	2.87E-07	5.56E-08
^{90}Sr	3.25E-12	3.54E-05	5.65E-10	1.73E-09	1.88E-02	3.01E-07	1.73E-09	1.88E-02	3.01E-07
^{99}Tc	2.18E-14	2.35E-07	3.09E-08	3.97E-12	4.32E-05	5.62E-06	3.99E-12	4.34E-05	5.65E-06
^{232}Th	2.02E-19	2.20E-12	4.41E-08	4.28E-18	4.66E-09	9.35E-05	4.29E-18	4.67E-09	9.35E-05
^{233}U	6.74E-18	7.34E-11	1.68E-11	3.51E-14	3.82E-07	8.74E-06	3.51E-14	3.82E-07	8.74E-06
^{234}U	4.79E-18	5.21E-11	1.85E-11	1.82E-15	1.98E-08	7.05E-09	1.83E-15	1.99E-08	7.07E-09
^{235}U	1.88E-19	2.05E-12	2.09E-09	4.38E-17	4.77E-10	4.87E-07	4.40E-17	4.79E-10	4.89E-07
^{236}U	3.23E-19	3.51E-12	1.20E-10	6.02E-17	6.56E-10	2.24E-08	6.05E-17	6.59E-10	2.25E-08
^{238}U	3.73E-18	4.07E-11	2.87E-07	1.03E-15	1.12E-08	7.37E-05	1.04E-15	1.13E-08	7.40E-05

(1) All radionuclides in gaseous streams are assumed to exist as solid particulate.

CAS Comp	Organic Components				
Unit	mol/L	Lb/gal	Lb/day	Mt/day	g/sec
Total	4.14E-09	4.96E-09	1.43E-02	6.49E-06	7.51E-05
50-32-8	2.28E-10	4.82E-10	1.39E-03	6.31E-07	7.30E-06
56-23-5	2.92E-25	3.78E-25	1.09E-18	4.91E-22	5.68E-21
57-14-7	4.33E-10	2.17E-10	6.24E-04	2.84E-07	3.28E-06
58-90-2	1.55E-10	3.00E-10	8.62E-04	3.92E-07	4.53E-06
59-89-2	1.63E-14	1.58E-14	4.54E-08	2.06E-11	2.38E-10
60-35-5	5.43E-12	2.68E-12	7.69E-06	3.50E-09	4.05E-08
62-75-9	1.14E-09	7.05E-10	2.03E-03	9.22E-07	1.07E-05
64-19-7	1.14E-11	5.70E-12	1.64E-05	7.45E-09	8.62E-08
71-43-2	1.15E-18	7.47E-18	2.15E-12	9.76E-16	1.13E-14
75-05-8	3.09E-11	1.06E-11	3.04E-05	1.38E-08	1.60E-07
75-12-7	5.31E-12	2.00E-12	5.74E-06	2.61E-09	3.02E-08
76-15-3	0.00E+00	0.00E+00	0.00E+00	0.00E+00	0.00E+00
79-01-6	9.82E-20	1.04E-19	3.10E-13	1.41E-16	1.63E-15
83-32-9	1.22E-14	1.56E-14	4.50E-08	2.05E-11	2.37E-10
84-66-2	3.42E-10	8.34E-10	1.82E-03	8.29E-07	9.59E-06
84-74-2	3.58E-10	8.33E-10	2.39E-03	1.09E-06	1.26E-05
87-68-3	3.60E-20	8.26E-20	2.38E-13	1.08E-16	1.25E-15
88-89-1	1.27E-14	2.44E-14	7.01E-08	3.19E-11	3.69E-10
91-20-3	7.07E-15	7.58E-15	2.18E-08	9.89E-12	1.14E-10
95-50-1	8.49E-16	1.04E-15	3.00E-09	1.36E-12	1.58E-11
98-95-2	1.72E-10	1.73E-10	4.97E-04	2.26E-07	2.61E-06
100-21-0	4.23E-16	5.86E-16	1.69E-09	7.68E-13	8.87E-12
101-84-8	1.84E-15	2.61E-15	7.50E-09	3.41E-12	3.95E-11
106-93-4	2.56E-15	4.02E-15	1.16E-08	5.25E-12	6.08E-11
108-87-8	0.00E+00	0.00E+00	0.00E+00	0.00E+00	0.00E+00
108-99-0	0.00E+00	0.00E+00	0.00E+00	0.00E+00	0.00E+00
108-87-2	0.00E+00	0.00E+00	0.00E+00	0.00E+00	0.00E+00
108-88-3	4.01E-19	3.08E-19	8.86E-13	4.03E-16	4.66E-15
108-95-2	5.50E-10	4.32E-10	1.24E-03	5.64E-07	6.53E-06
110-54-3	0.00E+00	0.00E+00	0.00E+00	0.00E+00	0.00E+00
110-82-7	0.00E+00	0.00E+00	0.00E+00	0.00E+00	0.00E+00
111-84-2	0.00E+00	0.00E+00	0.00E+00	0.00E+00	0.00E+00
120-12-7	2.03E-11	3.02E-11	8.68E-05	3.95E-08	4.57E-07
120-82-1	4.47E-16	6.77E-16	1.95E-09	8.85E-13	1.02E-11
122-39-4	1.39E-10	1.97E-10	5.65E-04	2.57E-07	2.97E-06
126-73-8	6.78E-11	1.51E-10	4.33E-04	1.97E-07	2.28E-06
127-18-4	1.68E-23	2.33E-23	6.71E-17	3.05E-20	3.53E-19
129-00-0	1.67E-10	2.82E-10	8.10E-04	3.68E-07	4.26E-06
132-64-9	1.25E-12	1.75E-12	5.04E-06	2.29E-09	2.65E-08
144-62-7	1.37E-11	1.03E-11	2.95E-05	1.34E-08	1.55E-07
193-39-5	2.62E-13	6.05E-13	1.74E-06	7.91E-10	9.15E-09
206-44-0	9.33E-15	1.57E-14	4.53E-08	2.06E-11	2.38E-10
206-96-8	8.08E-12	7.75E-12	2.22E-05	1.01E-08	1.17E-07
603-34-9	2.15E-10	4.40E-10	1.27E-03	5.78E-07	6.68E-06
621-64-7	1.45E-14	1.57E-14	4.53E-08	2.06E-11	2.38E-10
1321-64-8	8.25E-15	1.57E-14	4.51E-08	2.05E-11	2.37E-10
1336-36-3	4.19E-14	1.13E-13	3.24E-07	1.47E-10	1.70E-09
3697-24-3	7.79E-15	1.58E-14	4.53E-08	2.06E-11	2.38E-10
4170-30-3	7.88E-11	4.61E-11	1.33E-04	6.02E-08	6.97E-07
10061-01-5	2.12E-17	1.96E-17	5.64E-11	2.56E-14	2.97E-13
26140-60-3	8.18E-15	1.57E-14	4.52E-08	2.06E-11	2.38E-10

Attachment B - Calculations

This page intentionally left blank.

CALCULATION SHEET

BY E Barnes
DATE 01/09/06

PROJECT WTP
JOB NO 24590
CALC NO 24590-WTP-M4C-FRP-00015
SHEET REV C
SHEET NO B-2

	A	B	C	D	E	F	G	H	I	J	K	L	M	N	O	P
1	Table B-1 Feed Rate		Feed rate	1.51E+00	lb/min											
2				42.9	g/min											
3																
4																
5	CAS #	COPC	Conc (mg/L)	In ACM	Group	Grouping	Phase	Feed Rate g/sec		Coplanar PCBs		PVP01 g/sec				
6	100-00-5	p-Nitrochlorobenzene	40.0	No		10	vapor	2.86E-02								
7	100-21-0	p-Phthalic acid	80.0	Yes	1	1	vapor	4.29E-02								
8	100-41-4	Ethyl benzene	4.0	No		20	vapor	2.86E-03		31508-00-6	2,3',4,4',5-Pentachlorobiphenyl (PBC 118)	1.24E-06				
9	100-42-5	Styrene	4.0	No		19	vapor	2.86E-03		32598-13-3	3,3',4,4'-Tetrachlorobiphenyl (TCB)	1.24E-06		Correction for Coplanar PCBs		
10	10061-01-5	cis-1,3-Dichloropropene	4.0	Yes	19	19	vapor	2.86E-03		32598-14-4	2,3,3',4,4'-Pentachlorobiphenyl (PCB 105)	1.24E-06		1 as parent		
11	10061-02-6	trans-1,3-Dichloropropene	4.0	No		17	vapor	2.86E-03		32774-16-6	3,3',4,4',5,5'-Hexachlorobiphenyl	1.24E-06		0.01 as coplanar sum		
12	101-55-3	4-Bromophenylphenyl ether	60.0	No		14	vapor	4.29E-02		35065-29-3	2,2',3,4,4',5,5'-Heptachlorobiphenyl	1.24E-06				
13	101-84-8	Diphenyl ether	10.0	Yes	16	18	vapor	7.14E-03		35065-30-6	2,2',3,3',4,4',5-Heptachlorobiphenyl	1.24E-06				
14	108-35-4	3-Heptanone	4.0	No		14	vapor	2.86E-03		38380-08-4	2,3,3',4,4',5-Hexachlorobiphenyl (PCB 157)	1.24E-06				
15	108-42-3	p-Xylene (Dimethyl benzene)	10.0	No		19	vapor	7.14E-03		39635-31-9	2,3,3',4,4',5,5'-Heptachlorobiphenyl	1.24E-06				
16	108-46-7	1,4-Dichlorobenzene	4.0	No		18	vapor	2.86E-03		52663-72-6	2,3',4,4',5,5'-Hexachlorobiphenyl	1.24E-06				
17	108-88-7	1,2-Epoxybutane	10.0	No		15	vapor	7.14E-03		57465-28-8	3,3',4,4',5-Pentachlorobiphenyl	1.24E-06				
18	108-93-4	Ethylene dibromide (Dibromethane)	4.0	Yes	16	16	vapor	2.86E-03		65510-44-3	2',3,4,4',5-Pentachlorobiphenyl	1.24E-06				
19	108-97-8	Butane	10.0	Yes	26	26	vapor	7.14E-03		69782-90-7	2,3,3',4,4',5'-Hexachlorobiphenyl	1.24E-06				
20	108-99-0	1,3-Butadiene	4.0	Yes	23	23	vapor	2.86E-03		70362-50-4	3,4,4',5-Tetrachlorobiphenyl	1.24E-06				
21	107-02-8	Acrolein	10.0	No		14	vapor	7.14E-03		74472-37-0	2,3,4,4',5-Pentachlorobiphenyl	1.24E-06				
22	107-05-1	3-Chloropropene (Allyl chloride)	4.0	No		20	vapor	2.86E-03								
23	107-06-2	1,2-Dichloroethane (Ethylene chloride)	4.0	No		17	vapor	2.86E-03		1336-36-3	Polychlorinated biphenyls (PCBs)	1.74E-03				
24	107-12-0	Propionitrile	10.0	No		13	vapor	7.14E-03		1336-36-3	UnCorrected (for coplanar PCBs)	1.74E-03				
25	107-13-1	Acrylonitrile	20.0	No		14	vapor	1.43E-02								
26	107-18-6	2-Propene-1-ol	60.0	No		10	vapor	4.29E-02								
27	107-31-3	Formic acid, methyl ester	60.0	No		15	vapor	4.29E-02								
28	107-66-4	Dibutylphosphate	60.0	No		5	particle bound	4.29E-02								
29	107-87-9	2-Pentanone	20.0	No		14	vapor	1.43E-02								
30	108-03-2	1-Nitropropane	60.0	No		14	vapor	4.29E-02								
31	108-05-4	Vinyl acetate	60.0	No		16	vapor	4.29E-02								
32	108-10-1	Hexone (4-Methyl-2-pentanone or MIBK)	10.0	No		14	vapor	7.14E-03								
33	108-20-3	Bis(isopropyl)ether	10.0	No		18	vapor	7.14E-03								
34	108-38-3	m-Xylene (Dimethyl benzene)	10.0	No		19	vapor	7.14E-03								
35	108-39-4	m-Cresol	10.0	No		9	vapor	7.14E-03								
36	108-87-2	Methylcyclohexane	10.0	Yes	25	25	vapor	7.14E-03								
37	108-88-3	Toluene	4.0	Yes	19	19	vapor	2.86E-03								
38	108-90-7	Chlorobenzene	4.0	No		18	vapor	2.86E-03								
39	108-93-0	Cyclohexanol	10.0	No		10	vapor	7.14E-03								
40	108-94-1	Cyclohexanone	10.0	No		11	vapor	7.14E-03								
41	108-95-2	Phenol	60.0	Yes	8	8	vapor	4.29E-02								
42	109-66-0	n-Pentane	10.0	No		26	vapor	7.14E-03								
43	109-99-9	Tetrahydrofuran	4.0	No		13	vapor	2.86E-03								
44	110-12-3	5-Methyl-2-hexanone	4.0	No		15	vapor	2.86E-03								
45	110-43-0	2-Heptanone	4.0	No		15	vapor	2.86E-03								
46	110-54-3	n-Hexane	10.0	Yes	27	27	vapor	7.14E-03								
47	110-62-3	n-Valeraldehyde	60.0	No		15	vapor	4.29E-02								
48	110-82-7	Cyclohexane	10.0	Yes	24	24	vapor	7.14E-03								
49	110-83-8	Cyclohexene	4.0	No		22	vapor	2.86E-03								
50	110-86-1	Pyridine	20.0	No		11	vapor	1.43E-02								
51	111-65-9	n-Octane	10.0	No		28	vapor	7.14E-03								
52	111-76-2	Ethylene glycol monobutyl ether	60.0	No		9	vapor	4.29E-02								
53	111-84-2	n-Nonane	10.0	Yes	28	28	vapor	7.14E-03								
54	117-81-7	Bis(2-ethylhexyl)phthalate (DEHP)	60.0	No		30	particle bound	4.29E-02								
55	117-84-0	n-Dioctyl phthalate	60.0	No		32	particle bound	4.29E-02								
56	120-12-7	Anthracene	60.0	Yes	13	13	particle bound	4.29E-02								
57	120-82-1	1,2,4-Trichlorobenzene	10.0	Yes	17	17	vapor	7.14E-03								
58	120-83-2	2,4-Dichlorophenol	60.0	No		10	vapor	4.29E-02								
59	121-44-8	Triethylamine	10.0	No		15	vapor	7.14E-03								
60	121-69-7	Dimethylaniline	10.0	No		13	vapor	7.14E-03								
61	122-39-4	N,N-Diphenylamine	20.0	Yes	10	10	vapor	1.43E-02								
62	123-19-3	4-Heptanone	4.0	No		13	vapor	2.86E-03								
63	123-38-6	n-Propionaldehyde	20.0	No		14	vapor	1.43E-02								
64	123-51-3	3-Methyl-1-butanol	10.0	No		12	vapor	7.14E-03								
65	123-86-4	Acetic acid n-butyl ester	0.2	No		18	vapor	1.35E-04								
66	123-91-1	1,4-Dioxane	2.0	No		10	vapor	1.43E-03								
67	126-73-8	Tributyl phosphate	40.0	Yes	7	7	particle bound	2.86E-02								
68	126-98-7	2-Methyl-2-propenenitrile (Methacrylonitrile)	10.0	No		16	vapor	7.14E-03								
69	127-18-4	Perchloroethylene (tetrachloroethylene)	4.0	Yes	21	21	vapor	2.86E-03								
70	127-19-5	N,N-Dimethylacetamide	10.0	No		5	vapor	7.14E-03								
71	128-37-0	2,6-Bis(tert-butyl)-4-methylphenol	20.0	No		32	vapor	1.43E-02								
72	129-00-0	Pyrene	60.0	Yes	33	33	particle bound	4.29E-02								
73	1321-64-8	Pentachloronaphthalene	60.0	Yes	14	14	particle bound	4.29E-02								
74	1321-65-9	Trichloronaphthalene	60.0	No		15	particle bound	4.29E-02								
75	132-64-9	Dibenzofuran	60.0	Yes	15	15	particle bound	4.29E-02								
76	1335-87-1	Hexachloronaphthalene	60.0	No		14	particle bound	4.29E-02								
77	1335-88-2	Tetrachloronaphthalene	60.0	No		15	particle bound	4.29E-02								
78	1336-36-3	Polychlorinated biphenyls (PCBs)	0.7	Yes	35	35	vapor	1.74E-03								
79	141-78-6	Acetic acid ethyl ester (Ethyl acetate)	0.2	No		14	vapor	1.35E-04								
80	141-79-7	4-Methyl-3-penten-2-one	60.0	No		13	vapor	4.29E-02								
81	142-82-5	n-Heptane	10.0	No		27	vapor	7.14E-03								
82	144-62-7	Oxalic acid	3000.0	Yes	3	3	vapor	2.14E+00								
83	156-60-5	trans-1,2-Dichloroethylene	10.0	No		20	vapor	7.14E-03								
84	1634-04-4	Methyl tert-butyl ether	10.0	No		18	vapor	7.14E-03								
85	189-55-9	Dibenzo[a,i]pyrene	60.0	No		5	particle	4.29E-02								
86	189-64-0	Dibenzo[a,h]pyrene	60.0	No		5	particle	4.29E-02								
87	191-24-2	Benzo[g,h,i]perylene	60.0	No		10	particle bound	4.29E-02								
88	191-30-0	Benzo[a]pyrene	60.0	No		5	particle	4.29E-02								
89	192-65-4	Dibenzo[a,e]pyrene	60.0	No		5	particle	4.29E-02								
90	193-39-5	Indeno[1,2,3-cd]pyrene	60.0	Yes	30	30	particle	4.29E-02								
91	206-44-0	Fluoranthene	60.0	Yes	33	33	particle bound	4.29E-02								
92	208-96-8	Acenaphthylene	60.0	Yes	14	14	vapor	4.29E-02								
93	2234-13-1	Octachloronaphthalene	0.2	No		14	particle bound	1.35E-04								
94	224-42-0	Dibenz[a,j]acridine	60.0	No		4	particle bound	4.29E-02								
95	226-36-8	Dibenz[a,h]acridine	60.0	No		4	particle bound	4.29E-02								
96	2551-13-7	Trimethyl benzene	10.0	No		18	vapor	7.14E-03								
97	261-40-60-3	Terphenyls	60.0	Yes	34	34	particle bound	4.29E-02								
98	2711-54-33-2	Trichlorofluoroethane	10.0	No		23	vapor	7.14E-03								
99	287-92-3	Cyclopentane	10.0	No		24	vapor	7.14E-03								
100	3697-24-3	5-Methylchrysene	60.0	Yes	32	32	particle bound	4.29E-02								
101	3825-26-1	Ammonium perfluorooctanoate	60.0	No		14	vapor	4.29E-02								
102	4170-30-3	2-Butenaldehyde (2-Butenal or Crotonaldehyde)	10.0	Yes	11	11	vapor	7.14E-03								
103	50-00-0	Formaldehyde	10.0	No		8	vapor	7.14E-03								
104	50-32-8	Benzo[a]pyrene	38.0	Yes	30	30	particle bound	2.72E-02								
105	53-70-3	Dibenzo[a,h]anthracene	38.0	No		7	particle bound	2.72E-02								
106	540-59-0	1,2-Dichloroethylene	10.0	No		19	vapor	7.14E-03								
107	540-84-1	2,2,4-Trimethylpentane	10.0	No		28	vapor	7.14E-03								
108	541-73-1	1,3-Dichlorobenzene	4.0	No		19	vapor	2.86E-03								
109	56-23-5	Carbon tetrachloride	4.0	Yes	22	22	vapor	2.86E-03								
110	563-80-4	3-Methyl-2-butanone	10.0	No		14	vapor	7.14E-03								
111	56-49-5	3-Methylcholanthrene	60.0	No		38	particle bound	4.29E-02								
112	57-14-7	1,1-Dimethylhydrazine	60.0	Yes	12	12	vapor	4.29E-02								
113	58-90-2	2,3,4,6-Tetrachlorophenol	60.0	Yes	11	11	vapor	4.29E-02								
114	591-78-6	2-Hexanone	10.0	No		14	vapor	7.14E-03								
115	59-50-7	4-Chloro-3-methylphenol	60.0	No		32	vapor	4.29E-02								
116	59-89-2	N-Nitrosomorpholine	60.0	Yes	6	6	vapor	4.29E-02								
117	602-87-9	5-Nitroacenaphthene	60.0	No		9	particle bound	4.29E-02								
118	60-29-7	Ethyl ether	60.0	No		17	vapor	4.29E-02								
119	603-34-9	Triphenylamine	60.0	Yes	32	32	vapor	4.29E-02								
120	60-34-4	Methylhydrazine	10.0	No		10	vapor	7.14E-03								
121	60-35-5	Acetamide	10.0	Yes	5	5	vapor	7.14E-03								
122	621-64-7	Di-n-Propylnitrosamine (N-Nitroso-di-n-propylamine)	60.0	Yes	10	10	vapor	4.29E-02								
123	624-83-9	Methyl isocyanate	10.0	No		7	vapor	7.14E-03								
124	627-13-4	Nitric acid, propyl ester	5.0	No		7	vapor	3.57E-03								
125	62-75-9	N-Nitroso-N,N-dimethylamine (Dimethylnitrosamine)	60.0	Yes	9	9	vapor	4.29E-02								
126	630-20-6	1,1,1,2-Tetrachloroethane	10.0	No		8	vapor	7.14E-03								
127	64-17-5	Ethyl alcohol	10.0	No		10	vapor	7.14E-03								
128	64-18-6	Formic acid	15000.0	No		7	vapor	1.07E+01								
129	64-19-7	Acetic acid	21704.0	Yes	8	8	vapor	1.55E+01								
130	67-56-1	Methyl alcohol (Methanol)	10.0	No		10	vapor	7.14E-03								
131	67-63-0	2-Propyl alcohol (Isopropanol, Propan-2-01)	2.0	No		11	vapor	1.43E-03								
132	67-64-1	2-Propanone (Acetone)	20.0	No		13	vapor	1.43E-02								
133	67-66-3	Chloroform	4.0	No		19	vapor	2.86E-03								
134	67-72-1	Hexachloroethane	60.0	No		19	vapor	4.29E-02								
135	684-16-2	Hexafluoroacetone	10.0	No		19	vapor	7.14E-03								
136	71-23-8	n-Propyl alcohol	4.0	No		11	vapor	2.86E-03								
137	71-36-3	n-Butyl alcohol	10.0	No		11	vapor	7.14E-03								
138	71-43-2	Benzene	4.0	Yes	19	19	vapor	2.86E-03								
139	71-55-6	Methyl chloroform (1,1,1-Trichloroethane)	4.0	No		21	vapor	2.86E-03								
140	74-83-9	Bromomethane (Methyl bromide)	4.0	No		19	vapor	2.86E-03								
141	74-87-3	Chloromethane (Methyl chloride)	4.0	No		20	vapor	2.86E-03								
142	74-97-5	Bromochloromethane	10.0	No		17	vapor	7.14E-03								
143	74-99-7	Methylacetylene	60.0	No		20	vapor	4.29E-02								
144	75-00-3	Chloroethane	4.0	No		20	vapor	2.86E-03								
145	75-01-4	Vinyl chloride (1-Chloroethene)	4.0	No		22	vapor	2.86E-03								
146	75-05-8	Acetonitrile	10.0	Yes	13	13	vapor	7.14E-03								
147	75-07-0	Acetaldehyde	60.0	No		13	vapor	4.29E-02								
148	75-09-2	Dichloromethane (Methylene chloride)	4.0	No		19	vapor	2.86E-03								
149	75-12-7	Formamide	60.0	Yes	4	4	vapor	4.29E-02								
150	75-15-0	Carbon disulfide	10.0	No		20	vapor	7.14E-03								
151	75-21-8	Ethylene oxide (Oxirane)	2.0	No		15	vapor	1.43E-03								
152	75-27-4	Bromodichloromethane	10.0	No		18	vapor	7.14E-03								
153	75-34-3	1,1-Dichloroethane	4.0	No		19	vapor	2.86E-03								
154	75-35-4	1,1-Dichloroethene (Vinylidene chloride)	10.0	No		22	vapor	7.14E-03								

CALCULATION SHEET

BY: S. Burns
DATE: 01/09/06

PROJECT: WTP
JOB NO: 24940
CALC NO: 24940-WTP-MHC-PRP-00005
SHEET REV: C
SHEET NO: B-3

	A	B	C	D	E	F	G	H
4								Feed Rate
5	CAS #	COPC	Conc (mg/L)	In ACM	Group	Grouping	Phase	g/sec
155	75-43-4	Dichlorofluoromethane	4.0	No		20	vapor	2.86E-03
156	75-45-6	Chlorodifluoromethane	4.0	No		22	vapor	2.86E-03
157	75-50-3	Trimethylamine	10.0	No		14	vapor	7.14E-03
158	75-52-5	Nitromethane	60.0	No		13	vapor	4.29E-02
159	75-58-9	2-Methylaziridine	60.0	No		11	vapor	4.29E-02
160	75-61-6	Difluorodibromomethane	10.0	No		22	vapor	7.14E-03
161	75-63-8	Trifluorobromomethane	10.0	No		25	vapor	7.14E-03
162	75-65-0	2-Methyl-2-propanol	10.0	No		11	vapor	7.14E-03
163	75-69-4	Trichlorofluoromethane	10.0	No		23	vapor	7.14E-03
164	75-71-8	Dichlorodifluoromethane	10.0	No		25	vapor	7.14E-03
165	75-05-8	Trichloroacetic acid	10.0	No		5	vapor	7.14E-03
166	76-11-9	1,1,1,2-Tetrachloro-2,2-difluoroethane	60.0	No		24	vapor	4.29E-02
167	76-12-0	1,1,2,2-Tetrachloro-1,2-difluoroethane	60.0	No		23	vapor	4.29E-02
168	76-13-1	1,2,2-Trichloro-1,1,2-trifluoroethane (Freon 113)	10.0	No		25	vapor	7.14E-03
169	76-14-2	1,2-Dichloro-1,1,2,2-tetrafluoroethane	10.0	No		29	vapor	7.14E-03
170	76-15-3	Chloropentafluoroethane	10.0	Yes	29	29	vapor	7.14E-03
171	78-83-1	2-Methylpropyl alcohol (Isobutyl alcohol)	60.0	No		11	vapor	4.29E-02
172	78-87-5	1,2-Dichloropropane	4.0	No		19	vapor	2.86E-03
173	78-92-2	1-Methylpropyl alcohol (2-Butanol)	4.0	No		11	vapor	2.86E-03
174	78-93-3	Methyl ethyl ketone (MEK, 2-Butanone)	10.0	No		13	vapor	7.14E-03
175	79-00-5	1,1,2-Trichloroethane	10.0	No		17	vapor	7.14E-03
176	79-01-6	Trichloroethylene	10.0	Yes	20	20	vapor	7.14E-03
177	79-08-4	Propionic acid	60.0	No		8	vapor	4.29E-02
178	79-10-7	2-Propenoic acid	60.0	No		8	vapor	1.72E-02
179	79-20-9	Methyl acetate	60.0	No		14	vapor	4.29E-02
180	79-34-5	1,1,2,2-Tetrachloroethane	0.0	No		18	vapor	1.35E-06
181	83-32-9	Acenaphthene	60.0	Yes	15	15	vapor	4.29E-02
182	84-66-2	Diethyl phthalate	60.0	Yes	8	8	vapor	4.29E-02
183	84-74-2	Dibutyl phthalate	60.0	Yes	31	31	particle bound	4.29E-02
184	85-01-8	Phenanthrene	60.0	No		13	particle bound	4.29E-02
185	85-68-7	Butylbenzyl phthalate	60.0	No		31	particle bound	4.29E-02
186	86-73-7	Fluorene	60.0	No		14	vapor	4.29E-02
187	87-68-3	Hexachlorobutadiene	10.0	Yes	20	20	vapor	7.14E-03
188	88-06-2	2,4,6-Trichlorophenol	60.0	No		10	vapor	4.29E-02
189	88-72-2	2-Nitrotoluene	10.0	No		12	vapor	7.14E-03
190	88-75-5	2-Nitrophenol	60.0	No		12	vapor	4.29E-02
191	88-89-1	Picric acid	60.0	Yes	2	2	AHA	4.29E-02
192	91-20-3	Naphthalene	2.0	Yes	16	16	vapor	1.43E-03
193	91-22-5	Quinoline	60.0	No		9	vapor	4.29E-02
194	91-58-7	2-Chloronaphthalene	60.0	No		16	vapor	4.29E-02
195	92-52-4	1,1'-Biphenyl	40.0	No		16	vapor	2.86E-02
196	92-93-3	4-Nitrobiphenyl	60.0	No		10	particle bound	4.29E-02
197	95-13-6	Indene	60.0	No		18	vapor	4.29E-02
198	95-47-6	o-Xylene	4.0	No		19	vapor	2.86E-03
199	95-48-7	o-Cresol (2-Methylphenol)	10.0	No		9	vapor	7.14E-03
200	95-49-8	2-Chlorotoluene	60.0	No		19	vapor	4.29E-02
201	95-50-1	o-Dichlorobenzene (1,2-Dichlorobenzene)	4.0	Yes	18	18	vapor	2.86E-03
202	95-57-8	2-Chlorophenol	60.0	No		11	vapor	4.29E-02
203	95-95-4	2,4,5-Trichlorophenol	60.0	No		9	vapor	4.29E-02
204	96-22-0	3-Pentanone	20.0	No		14	vapor	1.43E-02
205	96-69-5	Bis(2-tert-butyl-4-hydroxy-5-methyl-phenyl)sulfide	60.0	No		19	vapor	4.29E-02
206	98-51-1	p-tert-Butylbenzene	60.0	No		11	vapor	4.29E-02
207	98-82-8	Cumene	60.0	No		20	vapor	4.29E-02
208	98-83-9	alpha-Methylstyrene	10.0	No		19	vapor	7.14E-03
209	98-86-2	Acetophenone	40.0	Yes	11	11	vapor	2.86E-02
210	98-95-3	Nitrobenzene	40.0	No		12	vapor	2.86E-02

Table 6-2 PVP01 - Unabated Pretreatment Vessel Vent System

Row	CAS #	COPC	Feed Rate g/sec	In ACM	Group	Grouping	Phase	PVP01 rate g/sec	Performance factor	Adjusted PF	Calc'd rate PVP01 g/sec	Corrected PVP01 g/sec
4	100-00-5	p-Nitrochlorobenzene	2.86E-02	No		10	vapor			5.43E-01	1.56E-02	1.56E-02
5	100-21-0	p-Phthalic acid	4.29E-02	Yes	1	1	vapor	2.38E-09	5.55E-08		2.38E-09	2.38E-09
6	100-41-4	Ethyl benzene	2.86E-03	No		20	vapor			1.00E+00	2.86E-03	2.86E-03
7	100-42-5	Styrene	2.86E-03	No		19	vapor			1.00E+00	2.86E-03	2.86E-03
8	10061-01-5	cis-1,3-Dichloropropene	2.86E-03	Yes	18	18	vapor	2.85E-03	9.98E-01		2.85E-03	2.85E-03
9	10061-02-6	trans-1,3-Dichloropropene	2.86E-03	No		17	vapor			9.89E-01	2.83E-03	2.83E-03
10	101-55-3	4-Bromophenylphenyl ether	4.29E-02	No		14	vapor			8.14E-01	3.49E-02	3.49E-02
11	101-84-8	Diphenyl ether	7.14E-03	Yes	18	18	vapor	6.98E-03	9.77E-01		6.98E-03	6.98E-03
12	106-35-4	3-Heptanone	2.86E-03	No		14	vapor			8.14E-01	2.33E-03	2.33E-03
13	106-42-3	p-Xylene (Dimethyl benzene)	7.14E-03	No		19	vapor			1.00E+00	7.15E-03	7.15E-03
14	106-46-7	1,4-Dichlorobenzene	2.86E-03	No		18	vapor			9.76E-01	2.79E-03	2.79E-03
15	106-88-7	1,2-Epoxybutane	7.14E-03	No		15	vapor			8.86E-01	6.33E-03	6.33E-03
16	106-93-4	Ethylene dibromide (Dibromoethane)	2.86E-03	Yes	16	16	vapor	2.72E-03	9.53E-01		2.72E-03	2.72E-03
17	106-97-8	Butane	7.14E-03	Yes	26	26	vapor	7.16E-03	1.00E+00		7.16E-03	7.16E-03
18	106-99-0	1,3-Butadiene	2.86E-03	Yes	23	23	vapor	2.86E-03	1.00E+00		2.86E-03	2.86E-03
19	107-02-8	Acrolein	7.14E-03	No		14	vapor			8.14E-01	5.82E-03	5.82E-03
20	107-05-1	3-Chloropropene (Allyl chloride)	2.86E-03	No		20	vapor			1.00E+00	2.86E-03	2.86E-03
21	107-06-2	1,2-Dichloroethane (Ethylene chloride)	2.86E-03	No		17	vapor			9.89E-01	2.83E-03	2.83E-03
22	107-12-0	Propionitrile	7.14E-03	No		13	vapor			4.16E-01	2.97E-03	2.97E-03
23	107-13-1	Acrylonitrile	1.43E-02	No		14	vapor			8.14E-01	1.16E-02	1.16E-02
24	107-19-7	2-Propyn-1-ol	4.29E-02	No		10	vapor			5.43E-01	2.33E-02	2.33E-02
25	107-31-3	Formic acid, methyl ester	4.29E-02	No		15	vapor			8.86E-01	3.80E-02	3.80E-02
26	107-66-4	Dibutylphosphate	4.29E-02	No		5	particle bound			1.18E-03	5.07E-05	5.07E-05
27	107-87-9	2-Pentanone	1.43E-02	No		14	vapor			8.14E-01	1.16E-02	1.16E-02
28	108-03-2	1-Nitropropane	4.29E-02	No		14	vapor			8.14E-01	3.49E-02	3.49E-02
29	108-05-4	Vinyl acetate	4.29E-02	No		16	vapor			9.47E-01	4.06E-02	4.06E-02
30	108-10-1	Hexone (4-Methyl-2-pentanone or MIBK)	7.14E-03	No		14	vapor			8.14E-01	5.82E-03	5.82E-03
31	108-20-3	Diisopropyl ether	7.14E-03	No		18	vapor			9.76E-01	6.97E-03	6.97E-03
32	108-38-3	m-Xylene (Dimethyl benzene)	7.14E-03	No		19	vapor			1.00E+00	7.15E-03	7.15E-03
33	108-39-4	m-Cresol	7.14E-03	No		8	vapor			9.38E-02	8.00E-04	8.00E-04
34	108-87-2	Methylcyclohexane	7.14E-03	Yes	25	25	vapor	7.17E-03	1.00E+00		7.17E-03	7.17E-03
35	108-88-3	Toluene	2.86E-03	Yes	19	19	vapor	2.86E-03	1.00E+00		2.86E-03	2.86E-03
36	108-90-7	Chlorobenzene	2.86E-03	No		19	vapor			1.00E+00	2.86E-03	2.86E-03
37	108-93-0	Cyclohexanol	7.14E-03	No		10	vapor			5.43E-01	3.88E-03	3.88E-03
38	108-94-1	Cyclohexanone	7.14E-03	No		11	vapor			1.74E-01	1.24E-03	1.24E-03
39	108-95-2	Phenol	4.29E-02	Yes	8	8	vapor	1.31E-03	3.06E-02		1.31E-03	1.31E-03
40	109-66-0	n-Pentane	7.14E-03	No		26	vapor			1.00E+00	7.16E-03	7.16E-03
41	109-99-9	Tetrahydrofuran	2.86E-03	No		13	vapor			4.16E-01	1.19E-03	1.19E-03
42	110-12-3	5-Methyl-2-hexanone	2.86E-03	No		15	vapor			8.86E-01	2.53E-03	2.53E-03
43	110-43-0	2-Heptanone	2.86E-03	No		15	vapor			8.86E-01	2.53E-03	2.53E-03
44	110-54-3	n-Hexane	7.14E-03	Yes	27	27	vapor	7.18E-03	1.00E+00		7.18E-03	7.18E-03
45	110-62-3	n-Valeraldehyde	4.29E-02	No		15	vapor			8.86E-01	3.80E-02	3.80E-02
46	110-82-7	Cyclohexane	7.14E-03	Yes	24	24	vapor	7.17E-03	1.00E+00		7.17E-03	7.17E-03
47	110-83-8	Cyclohexene	2.86E-03	No		22	vapor			1.00E+00	2.86E-03	2.86E-03
48	110-86-1	Pyridine	1.43E-02	No		11	vapor			1.74E-01	2.49E-03	2.49E-03
49	111-65-9	n-Octane	7.14E-03	No		28	vapor			1.00E+00	7.16E-03	7.16E-03
50	111-76-2	Ethylene glycol monobutyl ether	4.29E-02	No		9	vapor			8.86E-02	3.80E-03	3.80E-03
51	111-84-2	n-Nonane	7.14E-03	Yes	28	28	vapor	7.16E-03	1.00E+00		7.16E-03	7.16E-03
52	117-81-7	Bis(2-ethylhexyl)phthalate (DEHP)	4.29E-02	No		30	particle bound			3.44E+00	1.48E-01	1.48E-01
53	117-84-0	n-Dioctyl phthalate	4.29E-02	No		32	particle bound			5.59E-01	2.39E-02	2.39E-02
54	120-12-7	Anthracene	4.29E-02	Yes	13	13	particle bound	2.02E-02	4.70E-01		2.02E-02	2.02E-02
55	120-82-1	1,2,4-Trichlorobenzene	7.14E-03	Yes	17	17	vapor	7.07E-03	9.89E-01		7.07E-03	7.07E-03
56	120-83-2	2,4-Dichlorophenol	4.29E-02	No		10	vapor			5.43E-01	2.33E-02	2.33E-02
57	121-44-8	Triethylamine	7.14E-03	No		15	vapor			8.86E-01	6.33E-03	6.33E-03
58	121-69-7	Dimethylaniline	7.14E-03	No		13	vapor			4.16E-01	2.97E-03	2.97E-03
59	122-39-4	N,N-Diphenylamine	1.43E-02	Yes	10	10	vapor	1.57E-03	1.10E-01		1.57E-03	1.57E-03
60	123-19-3	4-Heptanone	2.86E-03	No		13	vapor			4.16E-01	1.19E-03	1.19E-03
61	123-38-6	n-Propionaldehyde	1.43E-02	No		14	vapor			8.14E-01	1.16E-02	1.16E-02
62	123-51-3	3-Methyl-1-butanol	7.14E-03	No		12	vapor			1.99E-01	1.42E-03	1.42E-03
63	123-86-4	Acetic acid n-butyl ester	1.36E-04	No		16	vapor			9.47E-01	1.29E-04	1.29E-04
64	123-91-1	1,4-Dioxane	1.43E-03	No		10	vapor			5.43E-01	7.76E-04	7.76E-04
65	126-73-8	Tributyl phosphate	2.86E-02	Yes	7	7	particle bound	4.56E-04	1.59E-02		4.56E-04	4.56E-04
66	126-98-7	2-Methyl-2-propenenitrile (Methacrylonitrile)	7.14E-03	No		16	vapor			9.47E-01	6.77E-03	6.77E-03
67	127-18-4	Perchloroethylene (tetrachloroethylene)	2.86E-03	Yes	21	21	vapor	2.86E-03	1.00E+00		2.86E-03	2.86E-03
68	127-19-5	N,N-Dimethylacetamide	7.14E-03	No		6	vapor			1.18E-03	8.44E-06	8.44E-06
69	128-37-0	2,6-Bis(tert-butyl)-4-methylphenol	1.43E-02	No		32	vapor			5.59E-01	7.99E-03	7.99E-03
70	129-00-0	Pyrene	4.29E-02	Yes	33	33	particle bound	9.35E-03	2.18E-01		9.35E-03	9.35E-03
71	1321-64-8	Pentachloronaphthalene	4.29E-02	Yes	14	14	particle bound	4.19E-02	9.78E-01		4.19E-02	4.19E-02
72	1321-65-9	Trichloronaphthalene	4.29E-02	No		15	particle bound			8.86E-01	3.80E-02	3.80E-02
73	132-64-9	Dibenzofuran	4.29E-02	Yes	15	15	particle bound	3.41E-02	7.96E-01		3.41E-02	3.41E-02
74	1335-87-1	Hexachloronaphthalene	4.29E-02	No		14	particle bound			8.14E-01	3.49E-02	3.49E-02
75	1335-88-2	Tetrachloronaphthalene	4.29E-02	No		15	particle bound			8.86E-01	3.80E-02	3.80E-02
76	1336-36-3	Polychlorinated biphenyls (PCBs)	1.74E-03	Yes	35	35	vapor	4.31E-03	2.48E+00		4.29E-03	4.29E-03
77	141-78-6	Acetic acid ethyl ester (Ethyl acetate)	1.36E-04	No		14	vapor			8.14E-01	1.10E-04	1.10E-04
78	141-79-7	4-Methyl-3-penten-2-one	4.29E-02	No		13	vapor			4.16E-01	1.78E-02	1.78E-02
79	142-82-5	n-Heptane	7.14E-03	No		27	vapor			1.00E+00	7.18E-03	7.18E-03
80	144-62-7	Oxalic acid	2.14E+00	Yes	3	3	vapor	3.27E-05	1.52E-05		3.27E-05	3.27E-05
81	156-60-5	trans-1,2-Dichloroethylene	7.14E-03	No		20	vapor			1.00E+00	7.15E-03	7.15E-03
82	1634-04-4	Methyl tert-butyl ether	7.14E-03	No		16	vapor			9.47E-01	6.77E-03	6.77E-03
83	189-55-9	Dibenzo(a,i)pyrene	4.29E-02	No		5	particle			1.18E-03	5.07E-05	5.07E-05
84	189-64-0	Dibenzo(a,h)pyrene	4.29E-02	No		5	particle			1.18E-03	5.07E-05	5.07E-05
85	191-24-2	Benzo(g,h,i)perylene	4.29E-02	No		30	particle bound			3.44E+00	1.48E-01	1.48E-01
86	191-30-0	Dibenzo(a,l)pyrene	4.29E-02	No		5	particle			1.18E-03	5.07E-05	5.07E-05
87	192-65-4	Dibenzo(a,e)pyrene	4.29E-02	No		5	particle			1.18E-03	5.07E-05	5.07E-05
88	193-39-5	Indeno(1,2,3-cd)pyrene	4.29E-02	Yes	30	30	particle	2.93E-01	6.83E+00		2.93E-01	2.93E-01
89	206-44-0	Fluoranthene	4.29E-02	Yes	33	33	particle bound	4.19E-02	9.77E-01		4.19E-02	4.19E-02
90	208-96-8	Acenaphthylene	4.29E-02	Yes	14	14	vapor	2.79E-02	6.51E-01		2.79E-02	2.79E-02
91	2234-13-1	Octachloronaphthalene	1.36E-04	No		14	particle bound			8.14E-01	1.10E-04	1.10E-04
92	224-42-0	Dibenz(a,j)acridine	4.29E-02	No		4	particle bound			1.48E-04	6.34E-06	6.34E-06
93	226-36-8	Dibenz(a,h)acridine	4.29E-02	No		4	particle bound			1.48E-04	6.34E-06	6.34E-06
94	25551-13-7	Trimethyl benzene	7.14E-03	No		19	vapor			1.00E+00	7.15E-03	7.15E-03
95	26140-60-3	Terphenyls	4.29E-02	Yes	34	34	particle bound	4.19E-02	9.78E-01		4.19E-02	4.19E-02
96	27154-33-2	Trichlorofluoroethane	7.14E-03	No		23	vapor			1.00E+00	7.15E-03	7.15E-03
97	287-92-3	Cyclopentane	7.14E-03	No		24	vapor			1.00E+00	7.17E-03	7.17E-03
98	3697-24-3	5-Methylchrysene	4.29E-02	Yes	32	32	particle bound	4.19E-02	9.78E-01		4.19E-02	4.19E-02
99	3825-26-1	Ammonium perfluorooctanoate	4.29E-02	No		14	vapor			8.14E-01	3.49E-02	3.49E-02
100	4170-30-3	2-Butenaldehyde (2-Butenal or Crotonaldehyde)	7.14E-03	Yes	11	11	vapor	1.25E-03	1.74E-01		1.25E-03	1.25E-03
101	50-00-0	Formaldehyde	7.14E-03	No		8	vapor			3.92E-02	2.80E-04	2.80E-04
102	50-32-8	Benzo(a)pyrene	2.72E-02	Yes	30	30	particle bound	1.40E-03	5.16E-02		1.40E-03	1.40E-03
103	53-70-3	Dibenz(a,h)anthracene	2.72E-02	No		7	particle bound			1.59E-02	4.33E-04	4.33E-04
104	540-59-0	1,2-Dichloroethylene	7.14E-03	No		19	vapor			1.00E+00	7.16E-03	7.15E-03
105	540-84-1	2,2,4-Trimethylpentane	7.14E-03	No		28	vapor			1.00E+00	7.16E-03	7.16E-03
106	541-73-1	1,3-Dichlorobenzene	2.86E-03	No		18	vapor			1.00E+00	2.86E-03	2.86E-03
107	56-23-5	Carbon tetrachloride	2.86E-03	Yes	22	22	vapor	2.86E-03	1.00E+00		2.86E-03	2.86E-03
108	563-80-4	3-Methyl-2-butanone	7.14E-03	No		14	vapor			8.14E-01	5.82E-03	5.82E-03
109	56-49-5	3-Methylcholanthrene	4.29E-02	No		26	particle bound			1.00E+00	4.30E-02	4.30E-02
110	57-14-7	1,1-Dimethylhydrazine	4.29E-02	Yes	12	12	vapor	8.54E-03	1.99E-01		8.54E-03	8.54E-03
111	58-90-2	2,3,4,6-Tetrachlorophenol	4.29E-02	Yes	11	11	vapor	7.12E-03	1.66E-01		7.12E-03	7.12E-03
112	591-78-6	2-Hexanone	7.14E-03	No		14	vapor			8.14E-01	5.82E-03	5.82E-03
113	59-50-7	4-Chloro-3-methylphenol	4.29E-02	No		32	vapor			5.59E-01	2.39E-02	2.39E-02
114	59-89-2	N-Nitrosomorpholine	4.29E-02	Yes	6	6	vapor	4.19E-02	9.77E-01		4.19E-02	4.19E-02
115	602-87-9	5-Nitroacenaphthene	4.29E-02	No		9	particle bound			8.86E-02	3.80E-03	3.80E-03
116	60-29-7	Ethyl ether	4.29E-02	No		17	vapor			9.89E-01	4.24E-02	4.24E-02
117	603-34-9	Triphenylamine	4.29E-02	Yes	32	32	vapor	5.99E-03	1.40E-01		5.99E-03	5.99E-03
118	60-34-4	Methylhydrazine	7.14E-03	No		10	vapor			5.43E-01	3.88E-03	3.88E-03
119	60-35-5	Acetamide	7.14E-03	Yes	5	5	vapor	8.46E-06	1.18E-03		8.46E-06	8.46E-06
120	621-64-7	Di-n-Propylnitrosamine (N-Nitroso-di-n-propylamine)	4.29E-02	Yes	10	10	vapor	4.19E-02	9.78E-01		4.19E-02	4.19E-02
121	624-83-9	Methyl isocyanate	7.14E-03	No		17	vapor			9.89E-01	7.07E-03	7.07E-03
122	627-13-4	Nitric acid, propyl ester	3.57E-03	No		17	vapor			9.89E-01	3.53E-03	3.53E-03
123	62-75-9	N-Nitroso-N,N-dimethylamine (Dimethylnitrosamine)	4.29E-02	Yes	9	9	vapor	3.80E-03	8.86E-02		3.80E-03	3.80E-03
124	630-20-6	1,1,1,2-Tetrachloroethane	7.14E-03	No		18	vapor			9.76E-01	6.97E-03	6.97E-03
125	64-17-5	Ethyl alcohol	7.14E-03	No		10	vapor			5.43E-01	3.88E-03	3.88E-03
126	64-18-6	Formic acid	1.07E+01	No		7	vapor			1.59E-02	1.71E-01	1.71E-01
127	64-19-7	Acetic acid	1.59E+01	Yes	6	6	vapor	1.51E+01	9.56E-01		1.51E+01	1.51E+01
128	67-56-1	Methyl alcohol (Methanol)	7.14E-03	No		10	vapor			5.43E-01	3.88E-03	3.88E-03
129	67-63-0	2-Propyl alcohol (Isopropanol, Propan-2-ol)	1.43E-03	No		11	vapor			1.74E-01	2.49E-04	2.49E-04
130	67-64-1	2-Propanone (Acetone)	1.43E-02	No		13	vapor			4.16E-01	5.94E-03	5.94E-03
131	67-66-3	Chloroform	2.86E-03	No		19	vapor			1.00E+00	2.86E-03	2.86E-03
132	67-72-1	Hexachloroethane	4.29E-02	No		18	vapor			1.00E+00	4.29E-02	4.29E-02
133	684-16-2	Hexafluoroacetone	7.14E-03	No		18	vapor			1.00E+00	7.15E-03	7.15E-03
134	71-23-8	n-Propyl alcohol	2.86E-03	No		11	vapor			1.74E-01	4.98E-04	4.98E-04
135	71-36-3	n-Butyl alcohol	7.14E-03	No		11	vapor			1.74E-01	1.24E-03	1.24E-03
136	71-43-2	Benzene	2.86E-03	Yes	18	18	vapor	2.86E-03	1.00E+00		2.86E-03	2.86E-03
137	71-55-6	Methyl chloroform (1,1,1-Trichloroethane)	2.86E-03	No		21	vapor			1.00E+00	2.86E-03	2.86E-03
138	74-83-9	Bromomethane (Methyl bromide)	2.86E-03	No		19	vapor			1.00E+00	2.86E-03	2.86E-03
139	74-87-3	Chloromethane (Methyl chloride)	2.86E-03	No		20	vapor			1.00E+00	2.86E-03	2.86E-03
140	74-97-5	Bromochloromethane	7.14E-03	No		17	vapor			9.89E-01	7.07E-03	7.07E-03
141	74-88-4	Methyl iodide	4.29E-02	No		20	vapor			1.00E+00	4.29E-02	4.29E-02
142	75-00-3	Chloroethane	2.86E-03	No		20	vapor			1.00E+00	2.86E-03	2.86E-03
143	75-01-4	Vinyl chloride (1-Chloroethene)	2.86E-03	No		22	vapor			1.00E+00	2.86E-03	2.86E-03
144	75-05-8	Acetonitrile	7.14E-03	Yes	13	13	vapor	2.58E-03	3.61E-01		2.58E-03	2.58E-03
145	75-07-0	Acetaldehyde	4.29E-02	No		13	vapor			4.16E-01	1.78E-02	1.78E-02
146	75-09-2	Dichloromethane (Methylene chloride)	2.86E-03	No		19	vapor			1.00E+00	2.86E-03	2.86E-03
147	75-12-7	Formamide	4.29E-02	Yes	4	4	vapor	6.34E-06	1.48E-04		6.34E-06	6.34E-06
148	75-15-0	Carbon disulfide	7.14E-03	No		20	vapor			1.00E+00	7.15E-03	7.15E-03
149	75-21-8	Ethylene oxide (Oxirane)	1.43E-03	No		15	vapor			8.86E-01	1.27E-03	1.27E-03
150	75-27-4	Bromodichloromethane	7.14E-03	No		18	vapor			9.76E-01	6.97E-03	6.97E-03
151	75-34-3	1,1-Dichloroethane	2.86E-03	No		18	vapor			1.00E+00	2.86E-03	2.86E-03
152	75-35-4	1,1-Dichloroethene (Vinylidene chloride)	7.14E-03	No		22	vapor			1.00E+00	7.16E-03	7.16E-03
153	75-43-4	Dichlorofluoromethane	2.86E-03	No		20	vapor			1.00E+00	2.86E-03	2.86E-03
154	75-45-6	Chlorodifluoromethane	2.86E-03	No		22	vapor			1.00E+00	2.86E-03	2.86E-03
155	75-50-3	Trimethylamine	7.14E-03	No		14	vapor			8.14E-01	5.82E-03	5.82E-03
156	75-52-5	Nitromethane	4.29E-02	No		13	vapor			4.16E-01	1.78E-02	1.78E-02
157	75-65-0	2-Methyl-2-propanol	4.29E-02	No		11	vapor			1.74E-01	7.45E-03	7.45E-03
158	75-61-6	Dibromodifluoromethane	7.14E-03	No		22	vapor			1.00E+00	7.16E-03	7.16E-03
159	75-63-8	Trifluorobromomethane	7.14E-03	No		25	vapor			1.00E+00	7.17E-03	7.17E-03
160	75-85-4	2-Methyl-2-butanol	7.14E-03	No		11	vapor			1.74E-01	1.24E-03	1.24E-03
161	75-69-4	Trichlorofluoromethane	7.14E-03	No		23	vapor			1.00E+00	7.15E-03	7.15E-03
162	75-71-8	Dichlorodifluoromethane	7.14E-03	No		25	vapor			1.00E+00	7.17E-03	7.17E-03
163	76-03-9	Trichloroacetic acid	7.14E-03	No		5	vapor			1.18E-03	8.46E-06	8.46E-06
164	76-11-9	1,1,1,2-Tetrachloro-2,2-difluoroethane	4.29E-02	No		24	vapor			1.00E+00	4.30E-02	4.30E-02
165	76-12-0	1,1,2,2-Tetrachloro-1,2-difluoroethane	4.29E-02	No		22	vapor			1.00E+00	4.29E-02	4.29E-02
166	76-13-1	1,2,2-Trichloro-1,1,2-trifluoroethane (Freon 113)	7.14E-03	No		25	vapor			1.00E+00	7.17E-03	7.17E-03
167	76-14-2	1,2-Dichloro-1,1,2,2-tetrafluoroethane	7.14E-03	No		26	vapor			1.00E+00	7.16E-03	7.16E-03
168	76-15-3	Chloropentafluoroethane	7.14E-03	Yes	28	28	vapor	7.16E-03	1.00E+00		7.16E-03	7.16E-03
169	78-83-1	2-Methylpropyl alcohol (Isobutyl alcohol)	4.29E-02	No		11	vapor			1.74E-01	7.45E-03	7.45E-03
170	78-87-5	1,2-Dichloropropane	2.86E-03	No		19	vapor			1.00E+00	2.86E-03	2.86E-03
171	78-92-2	1-Methylpropyl alcohol (2-Butanol)	2.86E-03	No		11	vapor			1.74E-01	4.98E-04	4.98E-04
172	78-93-3	Methyl ethyl ketone (MEK, 2-Butanone)	7.14E-03	No		13	vapor			4.16E-01	2.97E-03	2.97E-03
173	79-00-5	1,1,2-Trichloroethane	7.14E-03	No		17	vapor			9.89E-01	7.07E-03	7.07E-03
174	79-01-6	Trichloroethylene	7.14E-03	Yes	20	20	vapor	7.16E-03	1.00E+00		7.16E-03	7.16E-03
175	79-09-4	Propanoic acid	4.29E-02	No		6	vapor			3.92E-02	1.68E-03	1.68E-03
176	79-10-7	2-Propenoic acid	5.72E-02	No		6	vapor			3.92E-02	2.24E-03	2.24E-03
177	79-20-9	Methyl acetate	4.29E-02	No		14	vapor			8.14E-01	1.40E-02	1.40E-02
178	79-34-5	1,1,2,2-Tetrachloroethane	1.36E-05	No		16	vapor			9.47E-01	1.29E-05	1.29E-05
179	83-32-9	Acenaphthene	4.29E-02	Yes	15	15	vapor	4.18E-02	9.73E-01		4.18E-02	4.18E-02
180	84-66-2	Diethyl phthalate	4.29E-02	Yes	8	8	vapor	2.03E-03	4.73E-02		2.03E-03	2.03E-03
181	84-74-2	Dibutyl phthalate	4.29E-02	Yes	31	31	particle bound	4.09E-03	9.54E-02		4.09E-03	4.09E-03
182	85-01-8	Phenanthrene	4.29E-02	No		13	particle bound			4.16E-01	1.78E-02	1.78E-02
183	85-68-7	Butylbenzyl phthalate	4.29E-02	No		31	particle bound			9.54E-02	4.09E-03	4.09E-03
184	86-73-7	Fluorene	4.29E-02	No		14	vapor			8.14E-01	3.49E-02	3.49E-02
185	87-68-3	Hexachlorobutadiene	7.14E-03	Yes	20	20	vapor	7.15E-03	1.00E+00		7.15E-03	7.15E-03
186	88-06-2	2,4,6-Trichlorophenol	4.29E-02	No		10	vapor			5.43E-01	2.33E-02	2.33E-02
187	88-72-2	2-Nitrotoluene	7.14E-03	No		12	vapor			1.99E-01	1.42E-03	1.42E-03
188	88-75-5	2-Nitrophenol	4.29E-02	No		12	vapor			1.99E-01	8.54E-03	8.54E-03
189	88-89-1	Picric acid	4.29E-02	Yes	2	2	PNA	7.78E-08	1.81E-06		7.78E-08	7.78E-08
190	91-20-3	Naphthalene	1.43E-03	Yes	16	16	vapor	1.30E-03	9.11E-01		1.30E-03	1.30E-03
191	91-22-5	Quinoline	4.29E-02	No		9	vapor			8.86E-02	3.80E-03	3.80E-03
192	91-58-7	2-Chloronaphthalene	4.29E-02	No		16	vapor			9.47E-01	4.06E-02	4.06E-02
193	92-52-4	1,1'-Biphenyl	2.86E-02	No		16	vapor			9.47E-01	2.71E-02	2.71E-02
194	92-93-3	4-Nitrobiphenyl	4.29E-02	No		10	particle bound			5.43E-01	2.33E-02	2.33E-02
195	95-13-6	Indene	4.29E-02	No		18	vapor			9.76E-01	4.19E-02	4.19E-02
196	95-47-6	o-Xylene	2.86E-03	No		19	vapor			1.00E+00	2.86E-03	2.86E-03
197	95-48-7	o-Cresol (2-Methylphenol)	7.14E-03	No		8	vapor			9.38E-02	8.00E-04	8.00E-04
198	95-49-8	2-Chlorotoluene	4.29E-02	No		18	vapor			1.00E+00	4.29E-02	4.29E-02
199	95-50-1	o-Dichlorobenzene (1,2-Dichlorobenzene)	2.86E-03	Yes	18	18	vapor	2.79E-03	9.76E-01		2.79E-03	2.79E-03
200	95-57-8	2-Chlorophenol	4.29E-02	No		11	vapor			1.74E-01	7.46E-03	7.45E-03
201	95-95-4	2,4,5-Trichlorophenol	4.29E-02	No		9	vapor			8.86E-02	3.80E-03	3.80E-03
202	96-22-0	3-Pentanone	1.43E-02	No		14	vapor			8.14E-01	1.16E-02	1.16E-02
203	96-69-5	Bis(3-tert-butyl-4-hydroxy-6-methyl-phenyl)sulfide	4.29E-02	No		19	vapor			1.00E+00	4.29E-02	4.29E-02
204	98-51-1	p-tert-Butyltoluene	4.29E-02	No		21	vapor			1.00E+00	4.29E-02	4.29E-02
205	98-82-8	Cumene	4.29E-02	No		20	vapor			1.00E+00	4.29E-02	4.29E-02
206	98-83-9	alpha-Methylstyrene	7.14E-03	No		19	vapor			1.00E+00	7.15E-03	7.15E-03
207	98-86-2	Acetophenone	2.86E-02	Yes	11	11	vapor	5.16E-03	1.80E-01		5.16E-03	5.16E-03
208	98-95-3	Nitrobenzene	2.86E-02	No		12	vapor			1.99E-01	5.69E-03	5.69E-03
209											1.51E+01	

Adjusted Performance Factors

Group	PF
1	5.55E-08
2	1.81E-06
3	1.52E-05
4	1.48E-04
5	1.18E-03
6	8.79E-01
7	1.59E-02
8	3.62E-02
9	8.86E-02
10	5.43E-01
11	1.74E-01
12	1.99E-01
13	4.16E-01
14	8.14E-01
15	8.86E-01
16	9.47E-01
17	9.89E-01
18	9.76E-01
19	1.00E+00
20	1.00E+00
21	1.00E+00
22	1.00E+00
23	1.00E+00
24	1.00E+00
25	1.00E+00
26	1.00E+00
27	1.00E+00
28	1.00E+00
29	1.00E+00
30	3.44E+00
31	9.54E-02
32	5.59E-01
33	5.59E-01
34	9.78E-01
35	2.48E+00

Coplanar PCBs

CAS	Name	PVP01 g/sec	Corrected PVP01 g/sec
31508-00-6	2,3',4,4',5-Pentachlorobiphenyl (PBC 118)	3.08E-08	3.08E-08
32598-13-3	3,3',4,4'-Tetrachlorobiphenyl (TCB)	3.08E-08	3.08E-08
32598-14-4	2,3,3',4,4'-Pentachlorobiphenyl (PCB 105)	3.08E-08	3.08E-08
32774-16-6	3,3',4,4',5,5'-Hexachlorobiphenyl	3.08E-08	3.08E-08
35065-29-3	2,2',3,4,4',5,5'-Heptachlorobiphenyl	3.08E-08	3.08E-08
35065-30-6	2,2',3,3',4,4',5-Heptachlorobiphenyl	3.08E-08	3.08E-08
38380-08-4	2,3,3',4,4',5-Hexachlorobiphenyl (PCB 157)	3.08E-08	3.08E-08
39635-31-9	2,3,3',4,4',5,5'-Heptachlorobiphenyl	3.08E-08	3.08E-08
52663-72-6	2,3',4,4',5,5'-Hexachlorobiphenyl	3.08E-08	3.08E-08
57465-28-8	3,3',4,4',5-Pentachlorobiphenyl	3.08E-08	3.08E-08
65510-44-3	2',3,4,4',5-Pentachlorobiphenyl	3.08E-08	3.08E-08
69782-90-7	2,3,3',4,4',5'-Hexachlorobiphenyl	3.08E-08	3.08E-08
70362-50-4	3,4,4',5-Tetrachlorobiphenyl	3.08E-08	3.08E-08
74472-37-0	2,3,4,4',5-Pentachlorobiphenyl	3.08E-08	3.08E-08
1336-36-3	Polychlorinated biphenyls (PCBs)	4.29E-03	
1336-36-3	UnCorrected (for coplanar PCBs)	4.31E-03	

Correction for Coplanar PCBs
3.99 as parent
0.01 as coplanar sum

1

CALCULATION SHEET

Table B-2 PVP12 - [illegible]

A	B	C	D	E	F	G	L	M	N	O	P	Q
CAS #	COPC	PVP12	Phase	Fv	Fraction vapor	Fraction	TD	Carbon 3 yr DF	PVP12 vapor	PVP12	Total PVP12	Corrected PVP12
[illegible]	[illegible]	[illegible]	[illegible]	[illegible]	[illegible]	[illegible]	[illegible]	[illegible]	[illegible]	[illegible]	[illegible]	[illegible]

S	T	U	V
Coplanar PCBs		PVP12	Corrected PVP12
[illegible]	[illegible]	[illegible]	[illegible]
1336-36-3	Polychlorinated biphenyls (PCBs)	[illegible]	
1336-36-3	UnCorrected (for coplanar PCBs)	[illegible]	

Correction for Coplanar PCBs

CALCULATION SHEET

BY: F. Darke
DATE: 01/09/06

PROJECT: WTP
JOB NO: 24590
CALC NO: 24590-WTP-[illegible]
SHEET REV: [illegible]
SHEET NO: B4

Table 8-4 PJV04 - Unabated Pretreatment PJM/RFD

CAS #	COPC	Feed Rate g/sec	in ACM	Group	Grouping	Phase	PJV04 rate g/sec	Performance Factor	Adjusted PF	Calc'd rate PJV04 g/sec	Corrected PJV04 g/sec
100-00-5	p-Nitrochlorobenzene	2.86E-02	No		10	vapor			7.89E-07	2.30E-08	2.30E-08
100-21-0	p-Phthalic acid	4.29E-02	Yes	1	1	vapor	1.80E-07	4.44E-08		1.80E-07	1.80E-07
100-41-4	Ethyl benzene	2.86E-03	No		20	vapor			5.80E-07	1.66E-09	1.66E-09
100-42-5	Styrene	2.86E-03	No		18	vapor			5.81E-07	1.66E-09	1.66E-09
10061-01-5	cis-1,3-Dichloropropene	2.86E-03	Yes	19	19	vapor	1.66E-09	5.81E-07		1.66E-09	1.66E-09
10061-02-6	trans-1,3-Dichloropropene	2.86E-03	No		17	vapor			5.85E-07	1.67E-09	1.67E-09
101-55-3	4-Bromophenylphenyl ether	4.29E-02	No		14	vapor			6.27E-07	2.69E-08	2.69E-08
101-84-8	Diphenyl ether	7.14E-03	Yes	18	18	vapor	4.21E-09	5.89E-07		4.21E-09	4.21E-09
106-35-4	3-Heptanone	2.86E-03	No		14	vapor			6.27E-07	1.79E-09	1.79E-09
106-42-3	p-Xylene (Dimethyl benzene)	7.14E-03	No		18	vapor			5.81E-07	4.15E-09	4.15E-09
106-46-7	1,4-Dichlorobenzene	2.86E-03	No		18	vapor			5.89E-07	1.68E-09	1.68E-09
106-88-7	1,2-Epoxybutane	7.14E-03	No		15	vapor			6.10E-07	4.36E-09	4.36E-09
106-93-4	Ethylene dibromide (Dibromoethane)	2.86E-03	Yes	16	16	vapor	1.70E-09	5.96E-07		1.70E-09	1.70E-09
106-97-8	Butane	7.14E-03	Yes	28	28	vapor	4.14E-09	5.80E-07		4.14E-09	4.14E-09
106-99-0	1,3-Butadiene	2.86E-03	Yes	23	23	vapor	1.66E-09	5.79E-07		1.66E-09	1.66E-09
107-02-8	Acrolein	7.14E-03	No		14	vapor			6.27E-07	4.48E-09	4.48E-09
107-05-1	3-Chloropropene (Allyl chloride)	2.86E-03	No		20	vapor			5.80E-07	1.66E-09	1.66E-09
107-06-2	1,2-Dichloroethane (Ethylene chloride)	2.86E-03	No		17	vapor			5.85E-07	1.67E-09	1.67E-09
107-12-0	Propionitrile	7.14E-03	No		13	vapor			7.24E-07	5.17E-09	5.17E-09
107-13-1	Acrylonitrile	1.43E-02	No		14	vapor			6.27E-07	8.96E-09	8.96E-09
107-18-6	2-Propene-1-ol	4.29E-02	No		10	vapor			7.69E-07	3.30E-08	3.30E-08
107-31-3	Formic acid, methyl ester	4.29E-02	No		15	vapor			6.10E-07	2.61E-08	2.61E-08
107-66-4	Dibutylphosphate	4.29E-02	No		5	particle bound			1.58E-06	6.77E-08	6.77E-08
107-87-9	2-Pentanone	1.43E-02	No		14	vapor			6.27E-07	8.96E-09	8.96E-09
108-03-2	1-Nitropropane	4.29E-02	No		14	vapor			6.27E-07	2.69E-08	2.69E-08
108-05-4	Vinyl acetate	4.29E-02	No		18	vapor			5.81E-07	2.49E-08	2.49E-08
108-10-1	Hexone (4-Methyl-2-pentanone or MIBK)	7.14E-03	No		14	vapor			6.27E-07	4.48E-09	4.48E-09
108-20-3	Bis(isopropyl)ether	7.14E-03	No		18	vapor			5.89E-07	4.21E-09	4.21E-09
108-38-3	m-Xylene (Dimethyl benzene)	7.14E-03	No		18	vapor			5.81E-07	4.15E-09	4.15E-09
108-39-4	m-Cresol	7.14E-03	No		8	vapor			1.04E-06	7.44E-09	7.44E-09
108-87-2	Methylcyclohexane	7.14E-03	Yes	25	25	vapor	4.15E-09	5.81E-07		4.15E-09	4.15E-09
108-88-3	Toluene	2.86E-03	Yes	19	19	vapor	1.66E-09	5.80E-07		1.66E-09	1.66E-09
108-90-7	Chlorobenzene	2.86E-03	No		18	vapor			5.81E-07	1.66E-09	1.66E-09
108-93-0	Cyclohexanol	7.14E-03	No		10	vapor			7.69E-07	5.49E-09	5.49E-09
108-94-1	Cyclohexanone	7.14E-03	No		11	vapor			8.23E-07	5.88E-09	5.88E-09
108-95-2	Phenol	4.29E-02	Yes	8	8	vapor	5.94E-08	1.39E-06		5.94E-08	5.94E-08
109-66-0	n-Pentane	7.14E-03	No		28	vapor			5.80E-07	4.14E-09	4.14E-09
109-99-9	Tetrahydrofuran	2.86E-03	No		13	vapor			7.24E-07	2.07E-09	2.07E-09
110-12-3	5-Methyl-2-hexanone	2.86E-03	No		15	vapor			6.10E-07	1.74E-09	1.74E-09
110-43-0	2-Heptanone	2.86E-03	No		15	vapor			6.10E-07	1.74E-09	1.74E-09
110-54-3	n-Hexane	7.14E-03	Yes	27	27	vapor	4.14E-09	5.80E-07		4.14E-09	4.14E-09
110-62-3	n-Valeraldehyde	4.29E-02	No		15	vapor			6.10E-07	2.61E-08	2.61E-08
110-82-7	Cyclohexane	7.14E-03	Yes	24	24	vapor	4.15E-09	5.81E-07		4.15E-09	4.15E-09
110-83-8	Cyclohexene	2.86E-03	No		22	vapor			5.80E-07	1.66E-09	1.66E-09
110-86-1	Pyridine	1.43E-02	No		11	vapor			8.23E-07	1.18E-08	1.18E-08
111-65-9	n-Octane	7.14E-03	No		28	vapor			5.80E-07	4.14E-09	4.14E-09
111-76-2	Ethylene glycol monobutyl ether	4.29E-02	No		8	vapor			1.04E-06	4.47E-08	4.47E-08
111-84-2	n-Nonane	7.14E-03	Yes	28	28	vapor	4.14E-09	5.80E-07		4.14E-09	4.14E-09
117-81-7	Bis(2-ethylhexyl)phthalate (DEHP)	4.29E-02	No		30	particle bound			1.67E-06	7.17E-08	7.17E-08
117-84-0	n-Dioctyl phthalate	4.29E-02	No		32	particle bound			7.36E-07	3.16E-08	3.16E-08
120-12-7	Anthracene	4.29E-02	Yes	13	13	particle bound	3.04E-08	7.09E-07		3.04E-08	3.04E-08
120-82-1	1,2,4-Trichlorobenzene	7.14E-03	Yes	17	17	vapor	4.18E-09	5.85E-07		4.18E-09	4.18E-09
120-83-2	2,4-Dichlorophenol	4.29E-02	No		10	vapor			7.69E-07	3.30E-08	3.30E-08
121-44-8	Triethylamine	7.14E-03	No		15	vapor			6.10E-07	4.36E-09	4.36E-09
121-69-7	Dimethylaniline	7.14E-03	No		13	vapor			7.24E-07	5.17E-09	5.17E-09
122-39-4	N,N-Diphenylamine	1.43E-02	Yes	10	10	vapor	1.35E-08	9.44E-07		1.35E-08	1.35E-08
123-19-3	4-Heptanone	2.86E-03	No		13	vapor			7.24E-07	2.07E-09	2.07E-09
123-38-6	n-Propionaldehyde	1.43E-02	No		14	vapor			6.27E-07	8.96E-09	8.96E-09
123-51-3	3-Methyl-1-butanol	7.14E-03	No		12	vapor			8.03E-07	5.73E-09	5.73E-09
123-86-4	Acetic acid n-butyl ester	1.38E-04	No		18	vapor			5.86E-07	8.08E-11	8.08E-11
123-91-1	1,4-Dioxane	1.43E-03	No		10	vapor			7.69E-07	1.10E-09	1.10E-09
126-73-8	Tributyl phosphate	2.86E-02	Yes	7	7	particle bound	4.43E-08	1.55E-06		4.43E-08	4.43E-08
126-98-7	2-Methyl-2-propenenitrile (Methacrylonitrile)	7.14E-03	No		18	vapor			5.99E-07	4.28E-09	4.28E-09
127-18-4	Perchloroethylene (tetrachloroethylene)	2.86E-03	Yes	21	21	vapor	1.66E-09	5.80E-07		1.66E-09	1.66E-09
127-19-5	N,N-Dimethylacetamide	7.14E-03	No		5	vapor			1.58E-06	1.13E-08	1.13E-08
128-37-0	2,6-Bis(tert-butyl)-4-methylphenol	1.43E-02	No		32	vapor			7.36E-07	1.05E-08	1.05E-08
129-00-0	Pyrene	4.29E-02	Yes	33	33	particle bound	3.79E-08	8.84E-07		3.79E-08	3.79E-08
1321-64-8	Pentachloronaphthalene	4.29E-02	Yes	14	14	particle bound	2.53E-08	5.90E-07		2.53E-08	2.53E-08
1321-65-9	Trichloronaphthalene	4.29E-02	No		15	particle bound			6.10E-07	2.61E-08	2.61E-08
132-64-9	Dibenzofuran	4.29E-02	Yes	15	15	particle bound	2.71E-08	6.31E-07		2.71E-08	2.71E-08
1335-87-1	Hexachloronaphthalene	4.29E-02	No		14	particle bound			6.27E-07	2.69E-08	2.69E-08
1335-88-2	Tetrachloronaphthalene	4.29E-02	No		15	particle bound			6.10E-07	2.61E-08	2.61E-08
1336-36-3	Polychlorinated biphenyls (PCBs)	1.74E-03	Yes	35	35	vapor	1.37E-09	7.91E-07		1.38E-09	1.38E-09
141-78-6	Acetic acid ethyl ester (Ethyl acetate)	1.38E-04	No		14	vapor			6.27E-07	8.66E-11	8.66E-11
141-79-7	4-Methyl-3-penten-2-one	4.29E-02	No		13	vapor			7.24E-07	3.10E-08	3.10E-08
142-82-5	n-Heptane	7.14E-03	No		27	vapor			5.80E-07	4.14E-09	4.14E-09
144-62-7	Oxalic acid	2.14E+00	Yes	3	3	vapor	3.41E-08	1.59E-08		3.41E-08	3.41E-08
156-60-5	trans-1,2-Dichloroethylene	7.14E-03	No		20	vapor			5.80E-07	4.14E-09	4.14E-09
1634-04-4	Methyl tert-butyl ether	7.14E-03	No		18	vapor			5.99E-07	4.28E-09	4.28E-09
189-55-9	Dibenzo(a,i)pyrene	4.29E-02	No		5	particle			1.58E-06	6.77E-08	6.77E-08
189-64-0	Dibenzo(a,h)pyrene	4.29E-02	No		5	particle			1.58E-06	6.77E-08	6.77E-08
191-24-2	Benzo(g,h,i)perylene	4.29E-02	No		30	particle bound			1.67E-06	7.17E-08	7.17E-08
191-30-0	Dibenzo(a,l)pyrene	4.29E-02	No		5	particle			1.58E-06	6.77E-08	6.77E-08
192-65-4	Dibenzo(a,e)pyrene	4.29E-02	No		5	particle			1.58E-06	6.77E-08	6.77E-08
193-39-5	Indeno(1,2,3-cd)pyrene	4.29E-02	Yes	30	30	particle	6.88E-08	1.60E-06		6.88E-08	6.88E-08
206-44-0	Fluoranthene	4.29E-02	Yes	33	33	particle bound	2.53E-08	5.90E-07		2.53E-08	2.53E-08
208-96-8	Acenaphthylene	4.29E-02	Yes	14	14	vapor	2.69E-08	6.27E-07		2.69E-08	2.69E-08
2234-13-1	Octachloronaphthalene	1.38E-04	No		14	particle bound			6.27E-07	8.66E-11	8.66E-11
224-42-0	Dibenz(a,j)acridine	4.29E-02	No		4	particle bound			1.58E-06	6.80E-08	6.80E-08
226-36-8	Dibenz(a,h)acridine	4.29E-02	No		4	particle bound			1.58E-06	6.80E-08	6.80E-08
25551-13-7	Trimethyl benzene	7.14E-03	No		18	vapor			5.81E-07	4.15E-09	4.15E-09
26140-60-3	Terphenyl	4.29E-02	Yes	34	34	particle bound	2.53E-08	5.90E-07		2.53E-08	2.53E-08
27154-33-2	Trichlorofluoroethane	7.14E-03	No		23	vapor			5.79E-07	4.14E-09	4.14E-09
287-92-3	Cyclopentane	7.14E-03	No		24	vapor			5.81E-07	4.15E-09	4.15E-09
3697-24-3	5-Methylchrysene	4.29E-02	Yes	32	32	particle bound	2.53E-08	5.90E-07		2.53E-08	2.53E-08
3825-26-1	Ammonium perfluorooctanoate	4.29E-02	No		14	vapor			6.27E-07	2.69E-08	2.69E-08
4170-30-3	2-Butenaldehyde (2-Butenal or Crotonaldehyde)	7.14E-03	Yes	11	11	vapor	5.88E-09	8.23E-07		5.88E-09	5.88E-09
50-00-0	Formaldehyde	7.14E-03	No		6	vapor			1.33E-06	9.50E-09	9.50E-09
50-32-8	Benzo(a)pyrene	2.72E-02	Yes	30	30	particle bound	4.73E-08	1.74E-06		4.73E-08	4.73E-08
53-70-3	Dibenz(a,h)anthracene	2.72E-02	No		7	particle bound			1.55E-06	4.21E-08	4.21E-08
540-59-0	1,2-Dichloroethylene	7.14E-03	No		18	vapor			5.81E-07	4.15E-09	4.15E-09
540-84-1	2,2,4-Trimethylpentane	7.14E-03	No		28	vapor			5.80E-07	4.14E-09	4.14E-09
541-73-1	1,3-Dichlorobenzene	2.86E-03	No		18	vapor			5.81E-07	1.66E-09	1.66E-09
56-23-5	Carbon tetrachloride	2.86E-03	Yes	22	22	vapor	1.66E-09	5.80E-07		1.66E-09	1.66E-09
563-80-4	3-Methyl-2-butanone	7.14E-03	No		14	vapor			6.27E-07	4.48E-09	4.48E-09
56-49-5	3-Methylcholanthrene	4.29E-02	No		25	particle bound			5.80E-07	2.49E-08	2.49E-08
57-14-7	1,1-Dimethylhydrazine	4.29E-03	Yes	12	12	vapor	3.44E-09	8.03E-07		3.44E-09	3.44E-09
58-90-2	2,3,4,6-Tetrachlorophenol	4.29E-02	Yes	11	11	vapor	3.56E-08	8.30E-07		3.56E-08	3.56E-08
591-78-6	2-Hexanone	7.14E-03	No		14	vapor			6.27E-07	4.48E-09	4.48E-09
59-50-7	4-Chloro-3-methylphenol	4.29E-02	No		32	vapor			7.36E-07	3.16E-08	3.15E-08
59-89-2	N-Nitrosomorpholine	4.29E-02	Yes	9	9	vapor	2.53E-08	5.90E-07		2.53E-08	2.53E-08
602-87-9	5-Nitroacenaphthene	4.29E-02	No		8	particle bound			1.04E-06	4.47E-08	4.47E-08
60-29-7	Ethyl ether	4.29E-02	No		17	vapor			5.85E-07	2.51E-08	2.51E-08
603-34-9	Triphenylamine	4.29E-02	Yes	32	32	vapor	3.77E-08	8.78E-07		3.77E-08	3.77E-08
60-34-4	Methylhydrazine	7.14E-03	No		10	vapor			7.69E-07	5.49E-09	5.49E-09
60-35-5	Acetamide	7.14E-03	Yes	5	5	vapor	1.13E-08	1.58E-06		1.13E-08	1.13E-08
621-64-7	Di-n-Propylnitrosamine (N-Nitroso-di-n-propylamine)	4.29E-02	Yes	10	10	vapor	2.53E-08	5.90E-07		2.53E-08	2.53E-08
624-83-9	Methyl isocyanate	7.14E-03	No		17	vapor			5.85E-07	4.18E-09	4.18E-09
627-13-4	Nitric acid, propyl ester	3.57E-03	No		17	vapor			5.85E-07	2.09E-09	2.09E-09
62-75-9	N-Nitroso-N,N-dimethylamine (Dimethylnitrosamine)	4.29E-02	Yes	9	9	vapor	4.47E-08	1.04E-06		4.47E-08	4.47E-08
630-20-6	1,1,1,2-Tetrachloroethane	7.14E-03	No		18	vapor			5.89E-07	4.21E-09	4.21E-09
64-17-5	Ethyl alcohol	7.14E-03	No		10	vapor			7.69E-07	5.49E-09	5.49E-09
64-18-6	Formic acid	1.07E+01	No		7	vapor			1.55E-06	1.66E-08	1.66E-08
64-19-7	Acetic acid	1.55E+01	Yes	6	6	vapor	9.12E-08	5.89E-07		9.12E-08	9.12E-08
67-56-1	Methyl alcohol (Methanol)	7.14E-03	No		10	vapor			7.69E-07	5.49E-09	5.49E-09
67-63-0	2-Propyl alcohol (Isopropanol, Propan-2-ol)	1.43E-02	No		11	vapor			8.23E-07	1.18E-08	1.18E-08
67-64-1	2-Propanone (Acetone)	1.43E-02	No		13	vapor			7.24E-07	1.03E-08	1.03E-08
67-66-3	Chloroform	2.86E-03	No		18	vapor			5.81E-07	1.66E-09	1.66E-09
67-72-1	Hexachloroethane	4.29E-03	No		18	vapor			5.81E-07	2.49E-09	2.49E-09
684-16-2	Hexafluoroacetone	7.14E-03	No		18	vapor			5.81E-07	4.15E-09	4.15E-09
71-23-8	n-Propyl alcohol	2.86E-03	No		11	vapor			8.23E-07	2.35E-09	2.35E-09
71-36-3	n-Butyl alcohol	7.14E-03	No		11	vapor			8.23E-07	5.88E-09	5.88E-09
71-43-2	Benzene	2.86E-03	Yes	19	19	vapor	1.66E-09	5.81E-07		1.66E-09	1.66E-09
71-55-6	Methyl chloroform (1,1,1-Trichloroethane)	2.86E-03	No		21	vapor			5.80E-07	1.66E-09	1.66E-09
74-83-9	Bromomethane (Methyl bromide)	2.86E-03	No		19	vapor			5.81E-07	1.66E-09	1.66E-09
74-87-3	Chloromethane (Methyl chloride)	2.86E-03	No		20	vapor			5.80E-07	1.66E-09	1.66E-09
74-97-5	Bromochloromethane	7.14E-03	No		17	vapor			5.85E-07	4.18E-09	4.18E-09
74-99-7	Methylacetylene	4.29E-03	No		20	vapor			5.80E-07	2.49E-09	2.49E-09
75-00-3	Chloroethane	2.86E-03	No		20	vapor			5.80E-07	1.66E-09	1.66E-09
75-01-4	Vinyl chloride (1-Chloroethene)	2.86E-03	No		22	vapor			5.80E-07	1.66E-09	1.66E-09
75-05-8	Acetonitrile	7.14E-03	Yes	13	13	vapor	5.20E-09	7.28E-07		5.20E-09	5.20E-09
75-07-0	Acetaldehyde	4.29E-03	No		13	vapor			7.24E-07	3.10E-09	3.10E-09
75-09-2	Dichloromethane (Methylene chloride)	2.86E-03	No		18	vapor			5.81E-07	1.66E-09	1.66E-09
75-12-7	Formamide	4.29E-03	Yes	4	4	vapor	6.80E-09	1.59E-06		6.80E-09	6.80E-09
75-15-0	Carbon disulfide	7.14E-03	No		20	vapor			5.80E-07	4.14E-09	4.14E-09
75-21-8	Ethylene oxide (Oxirane)	1.43E-03	No		15	vapor			6.10E-07	8.72E-10	8.72E-10
75-27-4	Bromodichloromethane	7.14E-03	No		18	vapor			5.89E-07	4.21E-09	4.21E-09
75-34-3	1,1-Dichloroethane	2.86E-03	No		19	vapor			5.81E-07	1.66E-09	1.66E-09
75-35-4	1,1-Dichloroethene (Vinylidene chloride)	7.14E-03	No		22	vapor			5.80E-07	4.14E-09	4.14E-09
75-43-4	Dichlorofluoromethane	2.86E-03	No		20	vapor			5.80E-07	1.66E-09	1.66E-09
75-45-6	Chlorodifluoromethane	2.86E-03	No		23	vapor			5.80E-07	1.66E-09	1.66E-09
75-50-3	Trimethylamine	7.14E-03	No		14	vapor			6.27E-07	4.48E-09	4.48E-09
75-52-5	Nitromethane	4.29E-03	No		13	vapor			7.24E-07	3.10E-09	3.10E-09
75-55-8	2-Methylaziridine	4.29E-03	No		11	vapor			8.23E-07	3.53E-09	3.53E-09
75-61-6	Difluorodibromomethane	7.14E-03	No		22	vapor			5.80E-07	4.14E-09	4.14E-09
75-63-8	Trifluorobromomethane	7.14E-03	No		25	vapor			5.81E-07	4.15E-09	4.15E-09
75-65-0	2-Methyl-2-propanol	7.14E-03	No		11	vapor			8.23E-07	5.88E-09	5.88E-09
75-69-4	Trichlorofluoromethane	7.14E-03	No		23	vapor			5.79E-07	4.14E-09	4.14E-09
75-71-8	Dichlorodifluoromethane	7.14E-03	No		25	vapor			5.81E-07	4.15E-09	4.15E-09
76-03-9	Trichloroacetic acid	7.14E-03	No		5	vapor			1.58E-06	1.13E-08	1.13E-08
76-11-9	1,1,1,2-Tetrachloro-2,2-difluoroethane	4.29E-03	No		24	vapor			5.81E-07	2.49E-09	2.49E-09
76-12-0	1,1,2,2-Tetrachloro-1,2-difluoroethane	4.29E-03	No		23	vapor			5.79E-07	2.48E-09	2.48E-09
76-13-1	1,2,2-Trichloro-1,1,2-trifluoroethane (Freon 113)	7.14E-03	No		25	vapor			5.81E-07	4.15E-09	4.15E-09
76-14-2	1,2-Dichloro-1,1,2,2-tetrafluoroethane	7.14E-03	No		28	vapor			5.80E-07	4.14E-09	4.14E-09
76-15-3	Chloropentafluoroethane	7.14E-03	Yes	29	29	vapor	4.14E-09	5.79E-07		4.14E-09	4.14E-09
78-83-1	2-Methylpropyl alcohol (Isobutyl alcohol)	4.29E-03	No		11	vapor			8.23E-07	3.53E-09	3.53E-09
78-87-5	1,2-Dichloropropane	2.86E-03	No		19	vapor			5.81E-07	1.66E-09	1.66E-09
78-92-2	1-Methylpropyl alcohol (2-Butanol)	2.86E-03	No		11	vapor			8.23E-07	2.35E-09	2.35E-09
78-93-3	Methyl ethyl ketone (MEK, 2-Butanone)	7.14E-03	No		13	vapor			7.24E-07	5.17E-09	5.17E-09
79-00-5	1,1,2-Trichloroethane	7.14E-03	No		17	vapor			5.85E-07	4.18E-09	4.18E-09
79-01-6	Trichloroethylene	7.14E-03	Yes	20	20	vapor	4.15E-09	5.81E-07		4.15E-09	4.15E-09
79-09-4	Propionic acid	4.29E-03	No		6	vapor			1.33E-06	5.70E-09	5.70E-09
79-10-7	2-Propenoic acid	5.72E-03	No		6	vapor			1.33E-06	7.60E-09	7.60E-09
79-20-9	Methyl acetate	4.29E-03	No		14	vapor			6.27E-07	2.69E-09	2.69E-09
79-34-5	1,1,2,2-Tetrachloroethane	1.38E-05	No		18	vapor			5.86E-07	8.08E-12	8.08E-12
83-32-9	Acenaphthene	4.29E-02	Yes	15	15	vapor	2.52E-08	5.88E-07		2.53E-08	2.52E-08
84-66-2	Diethyl phthalate	4.29E-02	Yes	8	8	vapor	5.46E-08	1.27E-06		5.46E-08	5.46E-08
84-74-2	Dibutyl phthalate	4.29E-02	Yes	31	31	particle bound	4.83E-08	1.13E-06		4.83E-08	4.83E-08
85-01-8	Phenanthrene	4.29E-02	No		13	particle bound			7.24E-07	3.10E-08	3.10E-08
85-68-7	Butylbenzyl phthalate	4.29E-02	No		31	particle bound			1.15E-06	4.93E-08	4.93E-08
86-73-7	Fluorene	4.29E-02	No		14	vapor			6.27E-07	2.69E-08	2.69E-08
87-68-3	Hexachlorobutadiene	7.14E-03	Yes	20	20	vapor	4.14E-09	5.71E-07		4.14E-09	4.14E-09
88-06-2	2,4,6-Trichlorophenol	4.29E-02	No		10	vapor			7.69E-07	3.30E-08	3.30E-08
88-72-2	2-Nitrotoluene	7.14E-03	No		12	vapor			8.03E-07	5.73E-09	5.73E-09
88-75-5	2-Nitrophenol	4.29E-02	No		12	vapor			8.03E-07	3.44E-08	3.44E-08
88-89-1	Picric acid	4.29E-02	Yes	2	2	vapor	5.82E-08	1.36E-06		5.82E-08	5.82E-08
91-20-3	Naphthalene	1.43E-03	Yes	18	18	vapor	8.83E-10	6.04E-07		8.83E-10	8.83E-10
91-22-5	Quinoline	4.29E-02	No		8	vapor			1.04E-06	4.47E-08	4.47E-08
91-58-7	2-Chloronaphthalene	4.29E-02	No		18	vapor			5.89E-07	2.53E-08	2.53E-08
92-52-4	1,1'-Biphenyl	2.86E-02	No		18	vapor			5.89E-07	1.70E-08	1.70E-08
92-93-3	4-Nitrobiphenyl	4.29E-02	No		10	particle bound			7.69E-07	3.30E-08	3.30E-08
95-13-6	Indene	4.29E-02	No		18	vapor			5.89E-07	2.52E-08	2.52E-08
95-47-6	o-Xylene	2.86E-02	No		18	vapor			5.81E-07	1.66E-08	1.66E-08
95-48-7	o-Cresol (2-Methylphenol)	7.14E-03	No		8	vapor			1.04E-06	7.44E-09	7.44E-09
95-49-8	2-Chlorotoluene	4.29E-02	No		18	vapor			5.81E-07	2.49E-08	2.49E-08
95-50-1	o-Dichlorobenzene (1,2-Dichlorobenzene)	2.86E-02	Yes	18	18	vapor	1.68E-08	5.88E-07		1.68E-08	1.68E-08
95-57-8	2-Chlorophenol	4.29E-02	No		11	vapor			8.23E-07	3.53E-08	3.53E-08
95-95-4	2,4,5-Trichlorophenol	4.29E-02	No		8	vapor			1.04E-06	4.47E-08	4.47E-08
96-22-0	3-Pentanone	1.43E-02	No		14	vapor			6.27E-07	8.96E-09	8.96E-09
96-69-5	Bis(3-tert-butyl-4-hydroxy-6-methylphenyl)sulfide	4.29E-02	No		18	vapor			5.81E-07	2.49E-08	2.49E-08
98-06-6	tert-Butylbenzene	4.29E-02	No		21	vapor			5.80E-07	2.49E-08	2.49E-08
98-82-8	Cumene	4.29E-02	No		20	vapor			5.80E-07	2.49E-08	2.49E-08
98-83-9	alpha-Methylstyrene	7.14E-03	No		19	vapor			5.81E-07	4.15E-09	4.15E-09
98-86-2	Acetophenone	2.86E-02	Yes	11	11	vapor	2.33E-08	8.16E-07		2.33E-08	2.33E-08
98-95-3	Nitrobenzene	2.86E-02	No		12	vapor			8.00E-07	2.29E-08	2.29E-08
										3.29E-05	

Adjusted Performance Factors

Group	PF
1	4.44E-08
2	1.36E-06
3	1.59E-08
4	1.59E-06
5	1.58E-06
6	5.89E-07
7	1.55E-06
8	1.33E-06
9	1.04E-06
10	7.69E-07
11	8.23E-07
12	8.03E-07
13	7.24E-07
14	6.27E-07
15	6.10E-07
16	5.96E-07
17	5.85E-07
18	5.89E-07
19	5.81E-07
20	5.80E-07
21	5.80E-07
22	5.80E-07
23	5.79E-07
24	5.81E-07
25	5.81E-07
26	5.80E-07
27	5.80E-07
28	5.80E-07
29	5.79E-07
30	1.67E-06
31	1.15E-06
32	7.36E-07
33	7.77E-07
34	5.90E-07
35	7.91E-07

Coplanar PCBs

CAS	Name	PJV04 g/sec	Corrected PJV04 g/sec
31508-00-6	2,3',4,4',5-Pentachlorobiphenyl (PCB 118)	9.81E-13	9.81E-13
32598-13-3	3,3',4,4'-Tetrachlorobiphenyl (TCB)	9.81E-13	9.81E-13
32598-14-4	2,3,3',4,4'-Pentachlorobiphenyl (PCB 105)	9.81E-13	9.81E-13
32774-16-6	3,3',4,4',5,5'-Hexachlorobiphenyl	9.81E-13	9.81E-13
35065-29-3	2,2',3,4,4',5,5'-Heptachlorobiphenyl	9.81E-13	9.81E-13
35065-30-6	2,2',3,3',4,4',5-Heptachlorobiphenyl	9.81E-13	9.81E-13
38380-08-4	2,3,3',4,4',5-Hexachlorobiphenyl (PCB 157)	9.81E-13	9.81E-13
39635-31-9	2,3,3',4,4',5,5'-Heptachlorobiphenyl	9.81E-13	9.81E-13
52663-72-6	2,3',4,4',5,5'-Hexachlorobiphenyl	9.81E-13	9.81E-13
57465-28-8	3,3',4,4',5-Pentachlorobiphenyl	9.81E-13	9.81E-13
65510-44-3	2',3,4,4',5-Pentachlorobiphenyl	9.81E-13	9.81E-13
69782-90-7	2,3,3',4,4',5'-Hexachlorobiphenyl	9.81E-13	9.81E-13
70362-50-4	3,4,4',5-Tetrachlorobiphenyl	9.81E-13	9.81E-13
74472-37-0	2,3,4,4',5-Pentachlorobiphenyl	9.81E-13	9.81E-13

Correction for Coplanar PCBs
0.99 as parent
0.01 as coplanar sum

CAS	Name	PJV04 g/sec
1336-36-3	Polychlorinated biphenyls (PCBs)	1.36E-09
1336-36-3	UnCorrected (for coplanar PCBs)	1.37E-09

Table B-6 PJV11 - Absorbed Pretreatment PJM/RFD

Row	CAS #	COPC	PJV04 g/sec	Phase	Fv	Fraction vapor adjusted	Fraction particle	PJV11 g/sec vapor	PJV11 g/sec particle	Total PJV11 g/sec	Corrected PJV11 g/sec
4	100-00-5	p-Nitrochlorobenzene	2.20E-08	vapor	1.000	1.000	0.000	2.20E-08	0.00E+00	2.20E-08	2.20E-08
5	100-21-0	p-Phthalic acid	1.90E-07	vapor	1.000	1.000	0.000	1.90E-07	0.00E+00	1.90E-07	1.90E-07
6	100-41-4	Ethyl benzene	1.86E-09	vapor	1.000	1.000	0.000	1.86E-09	0.00E+00	1.86E-09	1.86E-09
7	100-42-5	Styrene	1.86E-09	vapor	1.000	1.000	0.000	1.86E-09	0.00E+00	1.86E-09	1.86E-09
8	10061-01-5	cis-1,3-Dichloropropene	1.86E-09	vapor	1.000	1.000	0.000	1.86E-09	0.00E+00	1.86E-09	1.86E-09
9	10061-02-6	trans-1,3-Dichloropropene	1.87E-09	vapor	1.000	1.000	0.000	1.87E-09	0.00E+00	1.87E-09	1.87E-09
10	101-55-3	4-Bromophenylphenyl ether	2.69E-08	vapor	1.000	1.000	0.000	2.69E-08	0.00E+00	2.69E-08	2.69E-08
11	101-84-8	Diphenyl ether	4.21E-09	vapor	1.000	1.000	0.000	4.21E-09	0.00E+00	4.21E-09	4.21E-09
12	106-35-4	3-Heptanone	1.79E-09	vapor	1.000	1.000	0.000	1.79E-09	0.00E+00	1.79E-09	1.79E-09
13	106-42-3	p-Xylene (Dimethyl benzene)	4.15E-09	vapor	1.000	1.000	0.000	4.15E-09	0.00E+00	4.15E-09	4.15E-09
14	106-46-7	1,4-Dichlorobenzene	1.86E-09	vapor	1.000	1.000	0.000	1.86E-09	0.00E+00	1.86E-09	1.86E-09
15	106-88-7	1,2-Epoxybutane	4.38E-09	vapor	1.000	1.000	0.000	4.38E-09	0.00E+00	4.38E-09	4.38E-09
16	106-93-4	Ethylene dibromide (Dibromoethane)	1.70E-09	vapor	1.000	1.000	0.000	1.70E-09	0.00E+00	1.70E-09	1.70E-09
17	106-97-8	Butane	4.14E-09	vapor	1.000	1.000	0.000	4.14E-09	0.00E+00	4.14E-09	4.14E-09
18	106-99-0	1,3-Butadiene	1.86E-09	vapor	1.000	1.000	0.000	1.86E-09	0.00E+00	1.86E-09	1.86E-09
19	107-02-8	Acrolein	4.48E-09	vapor	1.000	1.000	0.000	4.48E-09	0.00E+00	4.48E-09	4.48E-09
20	107-05-1	3-Chloropropene (Allyl chloride)	1.86E-09	vapor	1.000	1.000	0.000	1.86E-09	0.00E+00	1.86E-09	1.86E-09
21	107-06-2	1,2-Dichloroethane (Ethylene chloride)	1.87E-09	vapor	1.000	1.000	0.000	1.87E-09	0.00E+00	1.87E-09	1.87E-09
22	107-12-0	Propionitrile	5.17E-09	vapor	1.000	1.000	0.000	5.17E-09	0.00E+00	5.17E-09	5.17E-09
23	107-13-1	Acrylonitrile	8.95E-09	vapor	1.000	1.000	0.000	8.95E-09	0.00E+00	8.95E-09	8.95E-09
24	107-18-6	2-Propene-1-ol	3.30E-08	vapor	1.000	1.000	0.000	3.30E-08	0.00E+00	3.30E-08	3.30E-08
25	107-31-3	Formic acid, methyl ester	2.81E-08	vapor	1.000	1.000	0.000	2.81E-08	0.00E+00	2.81E-08	2.81E-08
26	107-66-4	Dibutylphosphate	8.77E-08	particle bound	0.995	0.995	0.005	8.74E-08	3.38E-18	8.74E-08	8.74E-08
27	107-87-9	2-Pentanone	8.95E-09	vapor	1.000	1.000	0.000	8.95E-09	0.00E+00	8.95E-09	8.95E-09
28	108-03-2	1-Nitropropane	2.89E-08	vapor	1.000	1.000	0.000	2.89E-08	0.00E+00	2.89E-08	2.89E-08
29	108-05-4	Vinyl acetate	2.58E-08	vapor	1.000	1.000	0.000	2.58E-08	0.00E+00	2.58E-08	2.58E-08
30	108-10-1	Hexone (4-Methyl-2-pentanone or MIBK)	4.48E-09	vapor	1.000	1.000	0.000	4.48E-09	0.00E+00	4.48E-09	4.48E-09
31	108-20-3	Bis(isopropyl)ether	4.21E-09	vapor	1.000	1.000	0.000	4.21E-09	0.00E+00	4.21E-09	4.21E-09
32	108-38-3	m-Xylene (Dimethyl benzene)	4.15E-09	vapor	1.000	1.000	0.000	4.15E-09	0.00E+00	4.15E-09	4.15E-09
33	108-39-4	m-Cresol	7.44E-09	vapor	1.000	1.000	0.000	7.44E-09	0.00E+00	7.44E-09	7.44E-09
34	108-87-2	Methylcyclohexane	4.15E-09	vapor	1.000	1.000	0.000	4.15E-09	0.00E+00	4.15E-09	4.15E-09
35	108-88-3	Toluene	1.86E-09	vapor	1.000	1.000	0.000	1.86E-09	0.00E+00	1.86E-09	1.86E-09
36	108-90-7	Chlorobenzene	1.86E-09	vapor	1.000	1.000	0.000	1.86E-09	0.00E+00	1.86E-09	1.86E-09
37	108-93-0	Cyclohexanol	5.49E-09	vapor	1.000	1.000	0.000	5.49E-09	0.00E+00	5.49E-09	5.49E-09
38	108-94-1	Cyclohexanone	5.88E-09	vapor	1.000	1.000	0.000	5.88E-09	0.00E+00	5.88E-09	5.88E-09
39	108-95-2	Phenol	5.94E-09	vapor	1.000	1.000	0.000	5.94E-09	0.00E+00	5.94E-09	5.94E-09
40	109-66-0	n-Pentane	4.14E-09	vapor	1.000	1.000	0.000	4.14E-09	0.00E+00	4.14E-09	4.14E-09
41	109-99-9	Tetrahydrofuran	2.07E-09	vapor	1.000	1.000	0.000	2.07E-09	0.00E+00	2.07E-09	2.07E-09
42	110-12-3	5-Methyl-2-hexanone	1.74E-09	vapor	1.000	1.000	0.000	1.74E-09	0.00E+00	1.74E-09	1.74E-09
43	110-43-0	2-Heptanone	1.74E-09	vapor	1.000	1.000	0.000	1.74E-09	0.00E+00	1.74E-09	1.74E-09
44	110-54-3	n-Hexane	4.14E-09	vapor	1.000	1.000	0.000	4.14E-09	0.00E+00	4.14E-09	4.14E-09
45	110-62-3	n-Valeraldehyde	2.81E-08	vapor	1.000	1.000	0.000	2.81E-08	0.00E+00	2.81E-08	2.81E-08
46	110-82-7	Cyclohexane	4.15E-09	vapor	1.000	1.000	0.000	4.15E-09	0.00E+00	4.15E-09	4.15E-09
47	110-83-8	Cyclohexene	1.86E-09	vapor	1.000	1.000	0.000	1.86E-09	0.00E+00	1.86E-09	1.86E-09
48	110-86-1	Pyridine	1.18E-08	vapor	1.000	1.000	0.000	1.18E-08	0.00E+00	1.18E-08	1.18E-08
49	111-65-9	n-Octane	4.14E-09	vapor	1.000	1.000	0.000	4.14E-09	0.00E+00	4.14E-09	4.14E-09
50	111-76-2	Ethylene glycol monobutyl ether	4.47E-08	vapor	1.000	1.000	0.000	4.47E-08	0.00E+00	4.47E-08	4.47E-08
51	111-84-2	n-Nonane	4.14E-09	vapor	1.000	1.000	0.000	4.14E-09	0.00E+00	4.14E-09	4.14E-09
52	117-81-7	Bis(2-ethylhexyl)phthalate (DEHP)	7.17E-08	particle bound	0.130	0.130	0.870	9.32E-09	6.24E-14	9.32E-09	9.32E-09
53	117-84-0	n-Dioctyl phthalate	3.15E-08	particle bound	0.852	0.852	0.148	2.68E-08	4.66E-15	2.68E-08	2.68E-08
54	120-12-7	Anthracene	3.04E-08	particle bound	0.998	0.998	0.002	3.03E-08	6.08E-17	3.03E-08	3.03E-08
55	120-82-1	1,2,4-Trichlorobenzene	4.18E-09	vapor	1.000	1.000	0.000	4.18E-09	0.00E+00	4.18E-09	4.18E-09
56	120-83-2	2,4-Dichlorophenol	3.30E-08	vapor	1.000	1.000	0.000	3.30E-08	0.00E+00	3.30E-08	3.30E-08
57	121-44-8	Triethylamine	4.38E-09	vapor	1.000	1.000	0.000	4.38E-09	0.00E+00	4.38E-09	4.38E-09
58	121-69-7	Dimethylaniline	5.17E-09	vapor	1.000	1.000	0.000	5.17E-09	0.00E+00	5.17E-09	5.17E-09
59	122-39-4	N,N-Diphenylamine	1.38E-08	vapor	1.000	1.000	0.000	1.38E-08	0.00E+00	1.38E-08	1.38E-08
60	123-19-3	4-Heptanone	2.07E-09	vapor	1.000	1.000	0.000	2.07E-09	0.00E+00	2.07E-09	2.07E-09
61	123-38-6	n-Propionaldehyde	8.95E-09	vapor	1.000	1.000	0.000	8.95E-09	0.00E+00	8.95E-09	8.95E-09
62	123-51-3	3-Methyl-1-butanol	5.73E-09	vapor	1.000	1.000	0.000	5.73E-09	0.00E+00	5.73E-09	5.73E-09
63	123-86-4	Acetic acid n-butyl ester	8.08E-11	vapor	1.000	1.000	0.000	8.08E-11	0.00E+00	8.08E-11	8.08E-11
64	123-91-1	1,4-Dioxane	1.10E-09	vapor	1.000	1.000	0.000	1.10E-09	0.00E+00	1.10E-09	1.10E-09
65	126-73-8	Tributyl phosphate	4.43E-08	particle bound	0.996	0.996	0.004	4.42E-08	1.77E-18	4.42E-08	4.42E-08
66	126-98-7	2-Methyl-2-propenenitrile (Methacrylonitrile)	4.29E-09	vapor	1.000	1.000	0.000	4.29E-09	0.00E+00	4.29E-09	4.29E-09
67	127-18-4	Perchloroethylene (tetrachloroethylene)	1.86E-09	vapor	1.000	1.000	0.000	1.86E-09	0.00E+00	1.86E-09	1.86E-09
68	127-19-5	N,N-Dimethylacetamide	1.13E-08	vapor	1.000	1.000	0.000	1.13E-08	0.00E+00	1.13E-08	1.13E-08
69	128-37-0	2,6-Bis(tert-butyl)-4-methylphenol	1.05E-08	vapor	1.000	1.000	0.000	1.05E-08	0.00E+00	1.05E-08	1.05E-08
70	129-00-0	Pyrene	3.79E-08	particle bound	0.994	0.994	0.006	3.77E-08	2.27E-18	3.77E-08	3.77E-08
71	1321-64-8	Pentachloronaphthalene	2.53E-08	particle bound	0.971	0.971	0.029	2.45E-08	7.33E-18	2.45E-08	2.45E-08
72	1321-65-9	Trichloronaphthalene	2.61E-08	particle bound	0.999	0.999	0.001	2.61E-08	2.61E-17	2.61E-08	2.61E-08
73	132-64-9	Dibenzofuran	2.71E-08	particle bound	0.999	0.999	0.001	2.70E-08	2.71E-17	2.70E-08	2.70E-08
74	1335-87-1	Hexachloronaphthalene	2.68E-08	particle bound	0.984	0.984	0.016	2.64E-08	4.30E-18	2.64E-08	2.64E-08
75	1335-88-2	Tetrachloronaphthalene	2.61E-08	particle bound	0.991	0.991	0.009	2.59E-08	2.35E-18	2.59E-08	2.59E-08
76	1336-36-3	Polychlorinated biphenyls (PCBs)	1.38E-09	vapor	1.000	1.000	0.000	1.38E-09	0.00E+00	1.38E-09	1.38E-09
77	141-78-6	Acetic acid ethyl ester (Ethyl acetate)	8.48E-11	vapor	1.000	1.000	0.000	8.48E-11	0.00E+00	8.48E-11	8.48E-11
78	141-79-7	4-Methyl-3-penten-2-one	3.10E-08	vapor	1.000	1.000	0.000	3.10E-08	0.00E+00	3.10E-08	3.10E-08
79	142-82-5	n-Heptane	4.14E-09	vapor	1.000	1.000	0.000	4.14E-09	0.00E+00	4.14E-09	4.14E-09
80	144-62-7	Oxalic acid	3.41E-08	vapor	1.000	1.000	0.000	3.41E-08	0.00E+00	3.41E-08	3.41E-08
81	156-60-5	trans-1,2-Dichloroethylene	4.14E-09	vapor	1.000	1.000	0.000	4.14E-09	0.00E+00	4.14E-09	4.14E-09
82	1634-04-4	Methyl tert-butyl ether	4.29E-09	vapor	1.000	1.000	0.000	4.29E-09	0.00E+00	4.29E-09	4.29E-09
83	189-55-9	Dibenzo(a,i)pyrene	6.77E-08	particle	0.000	0.000	1.000	0.00E+00	6.77E-14	6.77E-14	6.77E-14
84	189-64-0	Dibenzo(a,h)pyrene	6.77E-08	particle	0.000	0.000	1.000	0.00E+00	6.77E-14	6.77E-14	6.77E-14
85	191-24-2	Benzo(g,h,i)perylene	7.17E-08	particle bound	0.065	0.065	0.935	4.66E-09	6.70E-14	4.66E-09	4.66E-09
86	191-30-0	Benzo(a,l)pyrene	6.77E-08	particle	0.000	0.000	1.000	0.00E+00	6.77E-14	6.77E-14	6.77E-14
87	192-65-4	Dibenzo(a,e)pyrene	6.77E-08	particle	0.000	0.000	1.000	0.00E+00	6.77E-14	6.77E-14	6.77E-14
88	193-39-5	Indeno(1,2,3-cd)pyrene	6.88E-08	particle	0.000	0.000	1.000	0.00E+00	6.88E-14	6.88E-14	6.88E-14
89	206-44-0	Fluoranthene	2.53E-08	particle bound	0.992	0.992	0.008	2.51E-08	2.02E-18	2.51E-08	2.51E-08
90	208-96-8	Acenaphthylene	2.85E-08	vapor	1.000	1.000	0.000	2.85E-08	0.00E+00	2.85E-08	2.85E-08
91	2234-13-1	Octachloronaphthalene	8.48E-11	particle bound	0.629	0.629	0.371	5.33E-11	3.15E-17	5.33E-11	5.33E-11
92	224-42-0	Dibenz(a,j)acridine	6.80E-08	particle bound	0.241	0.241	0.759	1.64E-08	5.16E-14	1.64E-08	1.64E-08
93	226-36-8	Dibenz(a,h)acridine	6.80E-08	particle bound	0.285	0.285	0.715	1.94E-08	4.86E-14	1.94E-08	1.94E-08
94	25551-13-7	Trimethyl benzene	4.15E-09	vapor	1.000	1.000	0.000	4.15E-09	0.00E+00	4.15E-09	4.15E-09
95	26140-60-3	Terphenyls	2.53E-08	particle bound	0.872	0.872	0.128	2.21E-08	3.24E-15	2.21E-08	2.21E-08
96	27154-33-2	Trichlorofluoroethane	4.14E-09	vapor	1.000	1.000	0.000	4.14E-09	0.00E+00	4.14E-09	4.14E-09
97	287-92-3	Cyclopentane	4.15E-09	vapor	1.000	1.000	0.000	4.15E-09	0.00E+00	4.15E-09	4.15E-09
98	3697-24-3	5-Methylchrysene	2.53E-08	particle bound	0.823	0.823	0.177	2.08E-08	4.48E-15	2.08E-08	2.08E-08
99	3825-26-1	Ammonium perfluorooctanoate	2.69E-08	vapor	1.000	1.000	0.000	2.69E-08	0.00E+00	2.69E-08	2.69E-08
100	4170-30-3	2-Butenaldehyde (2-Butenal or Crotonaldehyde)	5.88E-09	vapor	1.000	1.000	0.000	5.88E-09	0.00E+00	5.88E-09	5.88E-09
101	50-00-0	Formaldehyde	9.50E-09	vapor	1.000	1.000	0.000	9.50E-09	0.00E+00	9.50E-09	9.50E-09
102	50-32-8	Benzo(a)pyrene	4.73E-08	particle bound	0.290	0.290	0.710	1.37E-08	3.36E-14	1.37E-08	1.37E-08
103	53-70-3	Dibenzo(a,h)anthracene	4.21E-08	particle bound	0.054	0.054	0.946	2.27E-09	3.98E-14	2.27E-09	2.27E-09
104	540-59-0	1,2-Dichloroethylene	4.15E-09	vapor	1.000	1.000	0.000	4.15E-09	0.00E+00	4.15E-09	4.15E-09
105	540-84-1	2,2,4-Trimethylpentane	4.14E-09	vapor	1.000	1.000	0.000	4.14E-09	0.00E+00	4.14E-09	4.14E-09
106	541-73-1	1,3-Dichlorobenzene	1.86E-09	vapor	1.000	1.000	0.000	1.86E-09	0.00E+00	1.86E-09	1.86E-09
107	56-23-5	Carbon tetrachloride	1.86E-09	vapor	1.000	1.000	0.000	1.86E-09	0.00E+00	1.86E-09	1.86E-09
108	563-80-4	3-Methyl-2-butanone	4.48E-09	vapor	1.000	1.000	0.000	4.48E-09	0.00E+00	4.48E-09	4.48E-09
109	56-49-5	3-Methylcholanthrene	2.49E-08	particle bound	0.364	0.364	0.636	9.05E-09	1.58E-14	9.05E-09	9.05E-09
110	57-14-7	1,1-Dimethylhydrazine	3.44E-08	vapor	1.000	1.000	0.000	3.44E-08	0.00E+00	3.44E-08	3.44E-08
111	58-90-2	2,3,4,6-Tetrachlorophenol	3.58E-08	vapor	1.000	1.000	0.000	3.58E-08	0.00E+00	3.58E-08	3.58E-08
112	591-78-6	2-Hexanone	4.48E-09	vapor	1.000	1.000	0.000	4.48E-09	0.00E+00	4.48E-09	4.48E-09
113	59-50-7	4-Chloro-3-methylphenol	3.15E-08	vapor	1.000	1.000	0.000	3.15E-08	0.00E+00	3.15E-08	3.15E-08
114	59-89-2	N-Nitrosomorpholine	2.53E-08	vapor	1.000	1.000	0.000	2.53E-08	0.00E+00	2.53E-08	2.53E-08
115	602-87-9	5-Nitroacenaphthene	4.47E-08	particle bound	0.997	0.997	0.003	4.45E-08	1.34E-18	4.45E-08	4.45E-08
116	60-29-7	Ethyl ether	2.51E-08	vapor	1.000	1.000	0.000	2.51E-08	0.00E+00	2.51E-08	2.51E-08
117	603-34-9	Triphenylamine	3.77E-08	vapor	1.000	1.000	0.000	3.77E-08	0.00E+00	3.77E-08	3.77E-08
118	60-34-4	Methylhydrazine	5.49E-09	vapor	1.000	1.000	0.000	5.49E-09	0.00E+00	5.49E-09	5.49E-09
119	60-35-5	Acetamide	1.13E-08	vapor	1.000	1.000	0.000	1.13E-08	0.00E+00	1.13E-08	1.13E-08
120	621-64-7	Di-n-Propylnitrosamine (N-Nitroso-di-n-propylamine)	2.53E-08	vapor	1.000	1.000	0.000	2.53E-08	0.00E+00	2.53E-08	2.53E-08
121	624-83-9	Methyl isocyanate	4.18E-09	vapor	1.000	1.000	0.000	4.18E-09	0.00E+00	4.18E-09	4.18E-09
122	627-13-4	Nitric acid, propyl ester	2.09E-09	vapor	1.000	1.000	0.000	2.09E-09	0.00E+00	2.09E-09	2.09E-09
123	62-75-9	N-Nitroso-N,N-dimethylamine (Dimethylnitrosamine)	4.47E-08	vapor	1.000	1.000	0.000	4.47E-08	0.00E+00	4.47E-08	4.47E-08
124	630-20-6	1,1,1,2-Tetrachloroethane	4.21E-09	vapor	1.000	1.000	0.000	4.21E-09	0.00E+00	4.21E-09	4.21E-09
125	64-17-5	Ethyl alcohol	5.49E-09	vapor	1.000	1.000	0.000	5.49E-09	0.00E+00	5.49E-09	5.49E-09
126	64-18-6	Formic acid	1.86E-05	vapor	1.000	1.000	0.000	1.86E-05	0.00E+00	1.86E-05	1.86E-05
127	64-19-7	Acetic acid	9.12E-08	vapor	1.000	1.000	0.000	9.12E-08	0.00E+00	9.12E-08	9.12E-08
128	67-56-1	Methyl alcohol (Methanol)	5.49E-09	vapor	1.000	1.000	0.000	5.49E-09	0.00E+00	5.49E-09	5.49E-09
129	67-63-0	2-Propyl alcohol (Isopropanol; Propan-2-01)	1.18E-08	vapor	1.000	1.000	0.000	1.18E-08	0.00E+00	1.18E-08	1.18E-08
130	67-64-1	2-Propanone (Acetone)	1.03E-08	vapor	1.000	1.000	0.000	1.03E-08	0.00E+00	1.03E-08	1.03E-08
131	67-66-3	Chloroform	1.86E-09	vapor	1.000	1.000	0.000	1.86E-09	0.00E+00	1.86E-09	1.86E-09
132	67-72-1	Hexachloroethane	2.49E-08	vapor	1.000	1.000	0.000	2.49E-08	0.00E+00	2.49E-08	2.49E-08
133	684-16-2	Hexafluoroacetone	4.15E-09	vapor	1.000	1.000	0.000	4.15E-09	0.00E+00	4.15E-09	4.15E-09
134	71-23-8	n-Propyl alcohol	2.35E-08	vapor	1.000	1.000	0.000	2.35E-08	0.00E+00	2.35E-08	2.35E-08
135	71-36-3	n-Butyl alcohol	5.88E-09	vapor	1.000	1.000	0.000	5.88E-09	0.00E+00	5.88E-09	5.88E-09
136	71-43-2	Benzene	1.86E-09	vapor	1.000	1.000	0.000	1.86E-09	0.00E+00	1.86E-09	1.86E-09
137	71-55-6	Methyl chloroform (1,1,1-Trichloroethane)	1.86E-09	vapor	1.000	1.000	0.000	1.86E-09	0.00E+00	1.86E-09	1.86E-09
138	74-83-9	Bromomethane (Methyl bromide)	1.86E-09	vapor	1.000	1.000	0.000	1.86E-09	0.00E+00	1.86E-09	1.86E-09
139	74-87-3	Chloromethane (Methyl chloride)	1.86E-09	vapor	1.000	1.000	0.000	1.86E-09	0.00E+00	1.86E-09	1.86E-09
140	74-97-5	Bromochloromethane	4.18E-09	vapor	1.000	1.000	0.000	4.18E-09	0.00E+00	4.18E-09	4.18E-09
141	74-99-7	Methylacetylene	2.49E-08	vapor	1.000	1.000	0.000	2.49E-08	0.00E+00	2.49E-08	2.49E-08
142	75-00-3	Chloroethane	1.86E-09	vapor	1.000	1.000	0.000	1.86E-09	0.00E+00	1.86E-09	1.86E-09
143	75-01-4	Vinyl chloride (1-Chloroethene)	1.86E-09	vapor	1.000	1.000	0.000	1.86E-09	0.00E+00	1.86E-09	1.86E-09
144	75-05-8	Acetonitrile	5.28E-09	vapor	1.000	1.000	0.000	5.28E-09	0.00E+00	5.28E-09	5.28E-09
145	75-07-0	Acetaldehyde	3.10E-08	vapor	1.000	1.000	0.000	3.10E-08	0.00E+00	3.10E-08	3.10E-08
146	75-09-2	Dichloromethane (Methylene chloride)	1.86E-09	vapor	1.000	1.000	0.000	1.86E-09	0.00E+00	1.86E-09	1.86E-09
147	75-12-7	Formamide	6.80E-08	vapor	1.000	1.000	0.000	6.80E-08	0.00E+00	6.80E-08	6.80E-08
148	75-15-0	Carbon disulfide	4.14E-09	vapor	1.000	1.000	0.000	4.14E-09	0.00E+00	4.14E-09	4.14E-09
149	75-21-8	Ethylene oxide (Oxirane)	8.72E-10	vapor	1.000	1.000	0.000	8.72E-10	0.00E+00	8.72E-10	8.72E-10
150	75-27-4	Bromodichloromethane	4.21E-09	vapor	1.000	1.000	0.000	4.21E-09	0.00E+00	4.21E-09	4.21E-09
151	75-34-3	1,1-Dichloroethane	1.86E-09	vapor	1.000	1.000	0.000	1.86E-09	0.00E+00	1.86E-09	1.86E-09
152	75-35-4	1,1-Dichloroethene (Vinylidene chloride)	4.14E-09	vapor	1.000	1.000	0.000	4.14E-09	0.00E+00	4.14E-09	4.14E-09
153	75-43-4	Dichlorofluoromethane	1.86E-09	vapor	1.000	1.000	0.000	1.86E-09	0.00E+00	1.86E-09	1.86E-09
154	75-45-6	Chlorodifluoromethane	1.86E-09	vapor	1.000	1.000	0.000	1.86E-09	0.00E+00	1.86E-09	1.86E-09
155	75-50-3	Trimethylamine	4.48E-09	vapor	1.000	1.000	0.000	4.48E-09	0.00E+00	4.48E-09	4.48E-09
156	75-52-5	Nitromethane	3.10E-08	vapor	1.000	1.000	0.000	3.10E-08	0.00E+00	3.10E-08	3.10E-08
157	75-55-8	2-Methylaziridine	3.53E-08	vapor	1.000	1.000	0.000	3.53E-08	0.00E+00	3.53E-08	3.53E-08
158	75-61-6	Difluorodibromomethane	4.14E-09	vapor	1.000	1.000	0.000	4.14E-09	0.00E+00	4.14E-09	4.14E-09
159	75-63-8	Trifluorobromomethane	4.15E-09	vapor	1.000	1.000	0.000	4.15E-09	0.00E+00	4.15E-09	4.15E-09
160	75-65-0	2-Methyl-2-propanol	5.88E-09	vapor	1.000	1.000	0.000	5.88E-09	0.00E+00	5.88E-09	5.88E-09
161	75-69-4	Trichlorofluoromethane	4.14E-09	vapor	1.000	1.000	0.000	4.14E-09	0.00E+00	4.14E-09	4.14E-09
162	75-71-8	Dichlorodifluoromethane	4.15E-09	vapor	1.000	1.000	0.000	4.15E-09	0.00E+00	4.15E-09	4.15E-09
163	76-03-9	Trichloroacetic acid	1.13E-08	vapor	1.000	1.000	0.000	1.13E-08	0.00E+00	1.13E-08	1.13E-08
164	76-11-9	1,1,1,2-Tetrachloro-2,2-difluoroethane	2.49E-08	vapor	1.000	1.000	0.000	2.49E-08	0.00E+00	2.49E-08	2.49E-08
165	76-12-0	1,1,2,2-Tetrachloro-1,2-difluoroethane	2.48E-08	vapor	1.000	1.000	0.000	2.48E-08	0.00E+00	2.48E-08	2.48E-08
166	76-13-1	1,2,2-Trichloro-1,1,2-trifluoroethane (Freon 113)	4.15E-09	vapor	1.000	1.000	0.000	4.15E-09	0.00E+00	4.15E-09	4.15E-09
167	76-14-2	1,2-Dichloro-1,1,2,2-tetrafluoroethane	4.14E-09	vapor	1.000	1.000	0.000	4.14E-09	0.00E+00	4.14E-09	4.14E-09
168	76-15-3	Chloropentafluoroethane	4.14E-09	vapor	1.000	1.000	0.000	4.14E-09	0.00E+00	4.14E-09	4.14E-09
169	78-83-1	2-Methylpropyl alcohol (Isobutyl alcohol)	3.53E-08	vapor	1.000	1.000	0.000	3.53E-08	0.00E+00	3.53E-08	3.53E-08
170	78-87-5	1,2-Dichloropropane	1.86E-09	vapor	1.000	1.000	0.000	1.86E-09	0.00E+00	1.86E-09	1.86E-09
171	78-92-2	1-Methylpropyl alcohol (2-Butanol)	2.35E-08	vapor	1.000	1.000	0.000	2.35E-08	0.00E+00	2.35E-08	2.35E-08
172	78-93-3	Methyl ethyl ketone (MEK, 2-Butanone)	5.17E-09	vapor	1.000	1.000	0.000	5.17E-09	0.00E+00	5.17E-09	5.17E-09
173	79-00-5	1,1,2-Trichloroethane	4.18E-09	vapor	1.000	1.000	0.000	4.18E-09	0.00E+00	4.18E-09	4.18E-09
174	79-01-6	Trichloroethylene	4.15E-09	vapor	1.000	1.000	0.000	4.15E-09	0.00E+00	4.15E-09	4.15E-09
175	79-09-4	Propionic acid	5.70E-08	vapor	1.000	1.000	0.000	5.70E-08	0.00E+00	5.70E-08	5.70E-08
176	79-10-7	2-Propenoic acid	7.60E-08	vapor	1.000	1.000	0.000	7.60E-08	0.00E+00	7.60E-08	7.60E-08
177	79-20-9	Methyl acetate	2.69E-08	vapor	1.000	1.000	0.000	2.69E-08	0.00E+00	2.69E-08	2.69E-08
178	79-34-5	1,1,2,2-Tetrachloroethane	8.08E-12	vapor	1.000	1.000	0.000	8.08E-12	0.00E+00	8.08E-12	8.08E-12
179	83-32-9	Acenaphthene	2.52E-08	vapor	1.000	1.000	0.000	2.52E-08	0.00E+00	2.52E-08	2.52E-08
180	84-66-2	Diethyl phthalate	5.49E-08	vapor	1.000	1.000	0.000	5.49E-08	0.00E+00	5.49E-08	5.49E-08

Coplanar PCBs		PJV11 g/sec	Corrected PJV11 g/sec
31508-00-6	2,3',4,4',5-Pentachlorobiphenyl (PBC 118)	9.81E-13	9.81E-13
32598-13-3	3,3',4,4'-Tetrachlorobiphenyl (TCB)	9.81E-13	9.81E-13
32598-14-4	2,3,3',4,4'-Pentachlorobiphenyl (PCB 105)	9.81E-13	9.81E-13
32774-16-6	3,3',4,4',5,5'-Hexachlorobiphenyl	9.81E-13	9.81E-13
35065-29-3	2,2',3,4,4',5,5'-Heptachlorobiphenyl	9.81E-13	9.81E-13
35065-30-6	2,2',3,3',4,4',5-Heptachlorobiphenyl	9.81E-13	9.81E-13
38380-08-4	2,3,3',4,4',5-Hexachlorobiphenyl (PCB 157)	9.81E-13	9.81E-13
39635-31-9	2,3,3',4,4',5,5'-Heptachlorobiphenyl	9.81E-13	9.81E-13
52663-72-6	2,3',4,4',5,5'-Hexachlorobiphenyl	9.81E-13	9.81E-13
57465-28-8	3,3',4,4',5-Pentachlorobiphenyl	9.81E-13	9.81E-13
65510-44-3	2',3,4,4',5-Pentachlorobiphenyl	9.81E-13	9.81E-13
69782-90-7	2,3,3',4,4',5'-Hexachlorobiphenyl	9.81E-13	9.81E-13
70362-50-4	3,4,4',5-Tetrachlorobiphenyl	9.81E-13	9.81E-13
74472-37-0	2,3,4,4',5-Pentachlorobiphenyl	9.81E-13	9.81E-13

Correction for Coplanar PCBs
0.99 as parent
0.01 as coplanar sum

1336-36-3	Polychlorinated biphenyls (PCBs)	1.36E-09
1336-36-3	UnCorrected (for coplanar PCBs)	1.37E-09

General DFs	Demister	HEPA 1	HEPA 2	Total DF
Vapor	1	1	1	1
Particle	5	2000	100	1.00E+06

CALCULATION SHEET

BY E Banks
DATE 11/19/96

PROJECT WTP
JOB NO. 24590
CALC NO 24590-WTP-M4C-PJV-00001
SHEET REV C
SHEET NO B-8

	A	B	C	D	E	F	G	K	L	M	N	O	P	Q	R	S	T	U	V
1	Table B-8 PJV11 - Alested Pretreatment PJMREP					Fraction		PJV11	PJV11	Total	Corrected								
2			PJV04		Fv	vapor	Fraction	g/sec	g/sec	PJV11	PJV11								
3	CAS #	COPC	g/sec	Phase		adjusted	particle	vapor	particle	g/sec	g/sec					Corrected			
181	84-74-2	Dibutyl phthalate	4.93E-08	particle bound	0.994	0.994	0.006	4.90E-08	2.96E-10	4.90E-08	4.90E-08								
182	85-01-8	Phenanthrene	3.10E-08	particle bound	0.999	0.999	0.001	3.10E-08	3.10E-17	3.10E-08	3.10E-08								
183	85-68-7	Butylbenzyl phthalate	4.93E-08	particle bound	0.948	0.948	0.052	4.67E-08	2.56E-15	4.67E-08	4.67E-08								
184	86-73-7	Fluorene	2.69E-08	vapor	1.000	1.000	0.000	2.69E-08	0.00E+00	2.69E-08	2.69E-08								
185	87-68-3	Hexachlorobutadiene	4.14E-08	vapor	1.000	1.000	0.000	4.14E-08	0.00E+00	4.14E-08	4.14E-08								
186	88-06-2	2,4,6-Trichlorophenol	3.30E-08	vapor	1.000	1.000	0.000	3.30E-08	0.00E+00	3.30E-08	3.30E-08								
187	88-72-2	2-Nitrotoluene	5.73E-08	vapor	1.000	1.000	0.000	5.73E-08	0.00E+00	5.73E-08	5.73E-08								
188	88-75-5	2-Nitrophenol	3.44E-08	vapor	1.000	1.000	0.000	3.44E-08	0.00E+00	3.44E-08	3.44E-08								
189	88-89-1	Picric acid	8.93E-08	gas	0.934	0.934	0.066	8.37E-08	4.90E-15	8.37E-08	8.37E-08								
190	91-20-3	Naphthalene	8.83E-10	vapor	1.000	1.000	0.000	8.83E-10	0.00E+00	8.83E-10	8.83E-10								
191	91-22-5	Quinoline	4.47E-08	vapor	1.000	1.000	0.000	4.47E-08	0.00E+00	4.47E-08	4.47E-08								
192	91-58-7	2-Chloronaphthalene	2.56E-08	vapor	1.000	1.000	0.000	2.56E-08	0.00E+00	2.56E-08	2.56E-08								
193	92-52-4	1,1-Biphenyl	1.70E-08	vapor	1.000	1.000	0.000	1.70E-08	0.00E+00	1.70E-08	1.70E-08								
194	92-93-3	4-Nitrobiphenyl	3.30E-08	particle bound	0.999	0.999	0.001	3.29E-08	3.30E-17	3.29E-08	3.29E-08								
195	95-15-8	Indole	2.52E-08	vapor	1.000	1.000	0.000	2.52E-08	0.00E+00	2.52E-08	2.52E-08								
196	95-47-6	o-Xylene	1.88E-08	vapor	1.000	1.000	0.000	1.88E-08	0.00E+00	1.88E-08	1.88E-08								
197	95-48-7	o-Cresol (2-Methylphenol)	7.44E-08	vapor	1.000	1.000	0.000	7.44E-08	0.00E+00	7.44E-08	7.44E-08								
198	95-49-8	2-Chlorotoluene	2.48E-08	vapor	1.000	1.000	0.000	2.48E-08	0.00E+00	2.48E-08	2.48E-08								
199	95-50-1	o-Dichlorobenzene (1,2-Dichlorobenzene)	1.88E-09	vapor	1.000	1.000	0.000	1.88E-09	0.00E+00	1.88E-09	1.88E-09								
200	95-57-8	2-Chlorophenol	3.53E-08	vapor	1.000	1.000	0.000	3.53E-08	0.00E+00	3.53E-08	3.53E-08								
201	95-95-4	2,4,5-Trichlorophenol	4.47E-08	vapor	1.000	1.000	0.000	4.47E-08	0.00E+00	4.47E-08	4.47E-08								
202	96-22-0	3-Pentanone	8.98E-09	vapor	1.000	1.000	0.000	8.98E-09	0.00E+00	8.98E-09	8.98E-09								
203	96-69-5	4MO-tert-butyl-6-hydroxy-8-methyl-phenylsulfide	2.48E-08	vapor	1.000	1.000	0.000	2.48E-08	0.00E+00	2.48E-08	2.48E-08								
204	98-51-1	p-tert-Butylcumene	2.48E-08	vapor	1.000	1.000	0.000	2.48E-08	0.00E+00	2.48E-08	2.48E-08								
205	98-82-8	Cumene	2.48E-08	vapor	1.000	1.000	0.000	2.48E-08	0.00E+00	2.48E-08	2.48E-08								
206	98-83-9	alpha-Methylstyrene	4.15E-08	vapor	1.000	1.000	0.000	4.15E-08	0.00E+00	4.15E-08	4.15E-08								
207	98-86-2	Acetophenone	2.33E-08	vapor	1.000	1.000	0.000	2.33E-08	0.00E+00	2.33E-08	2.33E-08								
208	98-95-3	Nitrobenzene	2.29E-08	vapor	1.000	1.000	0.000	2.29E-08	0.00E+00	2.29E-08	2.29E-08								
209										3.22E-06									

CALCULATION SHEET

A	B	C	D	E	F	G	H	I	J	K	L
Table B-3 LMPOE - Unabated LAW Melter											
		Feed Rate					LMPOE rate	Performance	Adjusted	Cal'd rate	Corrected
CAS #	COPC	g/sec	In ACM	Group	Grouping	Phase	g/sec	Factor	PF	LMPOE g/sec	LMPOE g/sec
[illegible]	[illegible]	[illegible]	[illegible]	[illegible]	[illegible]	[illegible]	[illegible]	[illegible]	[illegible]	[illegible]	[illegible]

Adjusted Performance Factors

Group	PF
[illegible]	[illegible]

Coplanar PCBs

CAS #	COPC	LMPOE g/sec	Corrected LMPOE g/sec
[illegible]	[illegible]	[illegible]	[illegible]

Correction for Coplanar PCBs

Table 6-7 LVP01 - LAW Vessel Ventilation

Row	CAS #	COPC	Feed Rate g/sec	In ACM	Group	Grouping	Phase	LVP01 rate g/sec	Performance Factor	Adjusted PF	Calc'd rate LVP01 g/sec	Corrected LVP01 g/sec
4	100-00-5	p-Nitrochlorobenzene	2.86E-02	No		10	vapor			2.58E-04	7.33E-08	7.33E-08
5	100-21-0	p-Phthalic acid	4.29E-02	Yes	1	1	vapor	8.19E-10	1.91E-08		8.19E-10	8.19E-10
6	100-41-4	Ethyl benzene	2.86E-03	No		20	vapor			0.00E+00	0.00E+00	0.00E+00
7	100-42-5	Styrene	2.86E-03	No		19	vapor			2.04E-14	5.83E-17	0.00E+00
8	10061-01-5	cis-1,3-Dichloropropene	2.86E-03	Yes	18	18	vapor	1.75E-16	6.12E-14		1.75E-16	0.00E+00
9	10061-02-6	trans-1,3-Dichloropropene	2.86E-03	No		17	vapor			7.14E-12	2.04E-14	2.04E-14
10	101-55-3	4-Bromophenylphenyl ether	4.29E-02	No		14	vapor			5.03E-07	2.16E-08	2.16E-08
11	101-84-8	Diphenyl ether	7.14E-03	Yes	16	16	vapor	2.22E-12	3.11E-10		2.22E-12	2.22E-12
12	106-35-4	3-Heptanone	2.86E-03	No		14	vapor			5.03E-07	1.44E-08	1.44E-08
13	106-42-3	p-Xylene (Dimethyl benzene)	7.14E-03	No		19	vapor			2.04E-14	1.46E-16	0.00E+00
14	106-46-7	1,4-Dichlorobenzene	2.86E-03	No		18	vapor			3.43E-11	9.78E-14	9.78E-14
15	106-88-7	1,2-Epoxybutane	7.14E-03	No		15	vapor			6.25E-08	4.46E-10	4.46E-10
16	106-93-4	Ethylene dibromide (Dibromoethane)	2.86E-03	Yes	16	16	vapor	1.86E-12	6.52E-10		1.86E-12	1.86E-12
17	106-97-8	Butane	7.14E-03	Yes	28	28	vapor	0.00E+00	0.00E+00		0.00E+00	0.00E+00
18	106-99-0	1,3-Butadiene	2.86E-03	Yes	23	23	vapor	0.00E+00	0.00E+00		0.00E+00	0.00E+00
19	107-02-8	Acrolein	7.14E-03	No		14	vapor			5.03E-07	3.59E-09	3.59E-09
20	107-05-1	3-Chloropropene (Allyl chloride)	2.86E-03	No		20	vapor			0.00E+00	0.00E+00	0.00E+00
21	107-06-2	1,2-Dichloroethane (Ethylene chloride)	2.86E-03	No		17	vapor			7.14E-12	2.04E-14	2.04E-14
22	107-12-0	Propanenitrile	7.14E-03	No		13	vapor			1.24E-05	8.86E-08	8.86E-08
23	107-13-1	Acrylonitrile	1.43E-02	No		14	vapor			5.03E-07	7.18E-09	7.18E-09
24	107-18-6	2-Propene-1-ol	4.29E-02	No		10	vapor			2.58E-04	1.10E-05	1.10E-05
25	107-31-3	Formic acid, methyl ester	4.29E-02	No		15	vapor			6.25E-08	2.68E-09	2.68E-09
26	107-66-4	Dibutylphosphate	4.29E-02	No		5	particle bound			3.66E-08	1.56E-09	1.56E-09
27	107-87-9	2-Pentanone	1.43E-02	No		14	vapor			5.03E-07	7.18E-09	7.18E-09
28	108-03-2	1-Nitropropane	4.29E-02	No		14	vapor			5.03E-07	2.16E-08	2.16E-08
29	108-05-4	Vinyl acetate	4.29E-02	No		18	vapor			2.29E-09	9.82E-11	9.82E-11
30	108-10-1	Hexone (4-Methyl-2-pentanone or MIBK)	7.14E-03	No		14	vapor			5.03E-07	3.59E-09	3.59E-09
31	108-20-3	Bis(isopropyl)ether	7.14E-03	No		18	vapor			3.43E-11	2.45E-13	2.45E-13
32	108-38-3	m-Xylene (Dimethyl benzene)	7.14E-03	No		19	vapor			2.04E-14	1.46E-16	0.00E+00
33	108-39-4	m-Cresol	7.14E-03	No		9	vapor			5.08E-04	3.61E-06	3.61E-06
34	108-87-2	Methylcyclohexane	7.14E-03	Yes	28	28	vapor	0.00E+00	0.00E+00		0.00E+00	0.00E+00
35	108-88-3	Toluene	2.86E-03	Yes	19	19	vapor	0.00E+00	0.00E+00		0.00E+00	0.00E+00
36	108-90-7	Chlorobenzene	2.86E-03	No		19	vapor			2.04E-14	5.83E-17	0.00E+00
37	108-93-0	Cyclohexanol	7.14E-03	No		10	vapor			2.58E-04	1.83E-06	1.83E-06
38	108-94-1	Cyclohexanone	7.14E-03	No		11	vapor			1.20E-04	8.56E-07	8.56E-07
39	108-95-2	Phenol	4.29E-02	Yes	8	8	vapor	2.36E-05	5.51E-04		2.36E-05	2.36E-05
40	109-66-0	n-Pentane	7.14E-03	No		26	vapor			0.00E+00	0.00E+00	0.00E+00
41	109-99-9	Tetrahydrofuran	2.86E-03	No		13	vapor			1.24E-05	3.55E-08	3.55E-08
42	110-12-3	5-Methyl-2-hexanone	2.86E-03	No		15	vapor			6.25E-08	1.79E-10	1.79E-10
43	110-43-0	2-Heptanone	2.86E-03	No		15	vapor			6.25E-08	1.79E-10	1.79E-10
44	110-54-3	n-Hexane	7.14E-03	Yes	27	27	vapor	0.00E+00	0.00E+00		0.00E+00	0.00E+00
45	110-62-3	n-Valeraldehyde	4.29E-02	No		15	vapor			6.25E-08	2.68E-09	2.68E-09
46	110-82-7	Cyclohexane	7.14E-03	Yes	24	24	vapor	0.00E+00	0.00E+00		0.00E+00	0.00E+00
47	110-83-8	Cyclohexene	2.86E-03	No		22	vapor			0.00E+00	0.00E+00	0.00E+00
48	110-86-1	Pyridine	1.43E-02	No		11	vapor			1.20E-04	1.72E-06	1.72E-06
49	111-65-9	n-Octane	7.14E-03	No		26	vapor			0.00E+00	0.00E+00	0.00E+00
50	111-76-2	Ethylene glycol monobutyl ether	4.29E-02	No		9	vapor			5.08E-04	2.17E-05	2.17E-05
51	111-84-2	n-Nonane	7.14E-03	Yes	29	29	vapor	0.00E+00	0.00E+00		0.00E+00	0.00E+00
52	117-81-7	Bis(2-ethylhexyl)phthalate (DEHP)	4.29E-02	No		30	particle bound			1.01E-03	4.33E-05	4.33E-05
53	117-84-0	n-Dioctyl phthalate	4.29E-02	No		32	particle bound			1.12E-04	4.82E-06	4.82E-06
54	120-12-7	Anthracene	4.29E-02	Yes	13	13	particle bound	3.28E-07	7.65E-06		3.28E-07	3.28E-07
55	120-82-1	1,2,4-Trichlorobenzene	7.14E-03	Yes	17	17	vapor	5.10E-14	7.14E-12		5.10E-14	5.10E-14
56	120-83-2	2,4-Dichlorophenol	4.29E-02	No		10	vapor			2.58E-04	1.10E-05	1.10E-05
57	121-44-8	Triethylamine	7.14E-03	No		15	vapor			6.25E-08	4.46E-10	4.46E-10
58	121-69-7	Dimethylaniline	7.14E-03	No		13	vapor			1.24E-05	8.86E-08	8.86E-08
59	122-39-4	N,N-Diphenylamine	1.43E-02	Yes	10	10	vapor	7.33E-06	5.13E-04		7.33E-06	7.33E-06
60	123-19-3	4-Heptanone	2.86E-03	No		13	vapor			1.24E-05	3.55E-08	3.55E-08
61	123-38-6	n-Propionaldehyde	1.43E-02	No		14	vapor			5.03E-07	7.18E-09	7.18E-09
62	123-51-3	3-Methyl-1-butanol	7.14E-03	No		12	vapor			8.64E-05	6.17E-07	6.17E-07
63	123-86-4	Acetic acid n-butyl ester	1.36E-04	No		16	vapor			2.29E-09	3.09E-13	3.09E-13
64	123-91-1	1,4-Dioxane	1.43E-03	No		10	vapor			2.58E-04	3.69E-07	3.69E-07
65	126-73-8	Tributyl phosphate	2.86E-02	Yes	7	7	particle bound	1.08E-05	3.77E-04		1.08E-05	1.08E-05
66	126-98-7	2-Methyl-2-propenenitrile (Methacrylonitrile)	7.14E-03	No		16	vapor			2.29E-09	1.61E-11	1.61E-11
67	127-18-4	Perchloroethylene (tetrachloroethylene)	2.86E-03	Yes	21	21	vapor	0.00E+00	0.00E+00		0.00E+00	0.00E+00
68	127-19-5	N,N-Dimethylacetamide	7.14E-03	No		5	vapor			3.66E-05	2.63E-07	2.63E-07
69	128-37-0	2,6-Bis(tert-butyl)-4-methylphenol	1.43E-02	No		32	vapor			1.12E-04	1.61E-06	1.61E-06
70	129-00-0	Pyrene	4.29E-02	Yes	33	33	particle bound	6.38E-06	1.49E-04		6.38E-06	6.38E-06
71	1321-64-8	Pentachloronaphthalene	4.29E-02	Yes	14	14	particle bound	2.29E-11	5.36E-10		2.29E-11	2.29E-11
72	1321-65-9	Trichloronaphthalene	4.29E-02	No		15	particle bound			6.25E-08	2.68E-09	2.68E-09
73	132-64-9	Dibenzofuran	4.29E-02	Yes	15	15	particle bound	5.33E-09	1.24E-07		5.33E-09	5.33E-09
74	1335-87-1	Hexachloronaphthalene	4.29E-02	No		14	particle bound			5.03E-07	2.16E-08	2.16E-08
75	1335-88-2	Tetrachloronaphthalene	4.29E-02	No		15	particle bound			6.25E-08	2.68E-09	2.68E-09
76	1336-36-3	Polychlorinated biphenyls (PCBs)	1.74E-03	Yes	35	35	vapor	1.47E-10	8.45E-08		1.45E-10	1.45E-10
77	141-78-6	Acetic acid ethyl ester (Ethyl acetate)	1.36E-04	No		14	vapor			5.03E-07	6.80E-11	6.80E-11
78	141-79-7	4-Methyl-3-penten-2-one	4.29E-02	No		13	vapor			1.24E-05	5.33E-07	5.33E-07
79	142-82-5	n-Heptane	7.14E-03	No		27	vapor			0.00E+00	0.00E+00	0.00E+00
80	144-62-7	Oxalic acid	2.14E+00	Yes	3	3	vapor	1.04E-06	4.86E-07		1.04E-06	1.04E-06
81	156-60-5	trans-1,2-Dichloroethylene	7.14E-03	No		20	vapor			0.00E+00	0.00E+00	0.00E+00
82	1634-04-4	Methyl tert-butyl ether	7.14E-03	No		16	vapor			2.29E-09	1.61E-11	1.61E-11
83	189-55-9	Dibenzo(a,i)pyrene	4.29E-02	No		5	particle			3.66E-08	1.56E-09	1.56E-09
84	189-64-0	Dibenzo(a,h)pyrene	4.29E-02	No		5	particle			3.66E-08	1.56E-09	1.56E-09
85	191-24-2	Benzo(g,h,i)perylene	4.29E-02	No		30	particle bound			1.01E-03	4.33E-05	4.33E-05
86	191-30-0	Dibenzo(a,l)pyrene	4.29E-02	No		5	particle			3.66E-08	1.56E-09	1.56E-09
87	192-65-4	Dibenzo(a,e)pyrene	4.29E-02	No		5	particle			3.66E-08	1.56E-09	1.56E-09
88	193-39-5	Indeno(1,2,3-cd)pyrene	4.29E-02	Yes	30	30	particle	5.03E-08	1.17E-07		5.03E-08	5.03E-08
89	206-44-0	Fluoranthene	4.29E-02	Yes	33	33	particle bound	1.04E-10	2.43E-09		1.04E-10	1.04E-10
90	208-96-8	Acenaphthylene	4.29E-02	Yes	14	14	vapor	4.31E-08	1.00E-06		4.31E-08	4.31E-08
91	2234-13-1	Octachloronaphthalene	1.35E-04	No		14	particle bound			5.03E-07	6.80E-11	6.80E-11
92	224-42-0	Dibenz(a,j)acridine	4.29E-02	No		4	particle bound			4.71E-06	2.02E-07	2.02E-07
93	226-36-8	Dibenz(a,h)acridine	4.29E-02	No		4	particle bound			4.71E-06	2.02E-07	2.02E-07
94	25551-13-7	Trimethyl benzene	7.14E-03	No		19	vapor			2.04E-14	1.46E-16	0.00E+00
95	26140-60-3	Terphenyls	4.29E-02	Yes	34	34	particle bound	7.03E-11	1.64E-09		7.03E-11	7.03E-11
96	27154-33-2	Trichlorofluoroethane	7.14E-03	No		23	vapor			0.00E+00	0.00E+00	0.00E+00
97	287-92-3	Cyclopentane	7.14E-03	No		24	vapor			0.00E+00	0.00E+00	0.00E+00
98	3697-24-3	5-Methylchrysene	4.29E-02	Yes	32	32	particle bound	1.12E-10	2.61E-09		1.12E-10	1.12E-10
99	3825-26-1	Ammonium perfluorooctanoate	4.29E-02	No		14	vapor			5.03E-07	2.16E-08	2.16E-08
100	4170-30-3	2-Butenaldehyde (2-Butenal or Crotonaldehyde)	7.14E-03	Yes	11	11	vapor	8.49E-07	1.19E-04		8.49E-07	8.49E-07
101	50-00-0	Formaldehyde	7.14E-03	No		9	vapor			5.93E-04	4.24E-06	4.24E-06
102	50-32-8	Benzo(a)pyrene	2.72E-02	Yes	30	30	particle bound	5.49E-05	2.02E-03		5.49E-05	5.49E-05
103	53-70-3	Dibenz(a,h)anthracene	2.72E-02	No		7	particle bound			3.77E-04	1.02E-05	1.02E-05
104	540-59-0	1,2-Dichloroethylene	7.14E-03	No		19	vapor			2.04E-14	1.46E-16	0.00E+00
105	540-84-1	2,2,4-Trimethylpentane	7.14E-03	No		26	vapor			0.00E+00	0.00E+00	0.00E+00
106	541-73-1	1,3-Dichlorobenzene	2.86E-03	No		19	vapor			2.04E-14	5.83E-17	0.00E+00
107	56-23-5	Carbon tetrachloride	2.86E-03	Yes	22	22	vapor	0.00E+00	0.00E+00		0.00E+00	0.00E+00
108	563-80-4	3-Methyl-2-butanone	7.14E-03	No		14	vapor			5.03E-07	3.59E-09	3.59E-09
109	56-49-5	3-Methylcholanthrene	4.29E-02	No		28	particle bound			0.00E+00	0.00E+00	0.00E+00
110	57-14-7	1,1-Dimethylhydrazine	4.29E-02	Yes	12	12	vapor	3.70E-05	8.64E-05		3.70E-05	3.70E-05
111	58-90-2	2,3,4,6-Tetrachlorophenol	4.29E-02	Yes	11	11	vapor	5.66E-06	1.32E-04		5.66E-06	5.66E-06
112	591-78-6	2-Hexanone	7.14E-03	No		14	vapor			5.03E-07	3.59E-09	3.59E-09
113	59-50-7	4-Chloro-3-methylphenol	4.29E-02	No		32	vapor			1.12E-04	4.82E-06	4.82E-06
114	59-89-2	N-Nitrosomorpholine	4.29E-02	Yes	6	6	vapor	1.27E-10	2.97E-09		1.27E-10	1.27E-10
115	602-87-9	5-Nitroacenaphthene	4.29E-02	No		9	particle bound			5.08E-04	2.17E-05	2.17E-05
116	60-29-7	Ethyl ether	4.29E-02	No		17	vapor			7.14E-12	3.06E-13	3.06E-13
117	603-34-9	Triphenylamine	4.29E-02	Yes	32	32	vapor	9.63E-06	2.25E-04		9.63E-06	9.63E-06
118	60-34-4	Methylhydrazine	7.14E-03	No		10	vapor			2.58E-04	1.83E-06	1.83E-06
119	60-35-5	Acetamide	7.14E-03	Yes	5	5	vapor	2.63E-07	3.68E-05		2.63E-07	2.63E-07
120	621-64-7	Di-n-Propylnitrosamine (N-Nitroso-di-n-propylamine)	4.29E-02	Yes	10	10	vapor	1.12E-10	2.62E-09	2.58E-04	1.10E-05	1.10E-05
121	624-83-9	Methyl isocyanate	7.14E-03	No		17	vapor			7.14E-12	5.10E-14	5.10E-14
122	627-13-4	Nitric acid, propyl ester	3.57E-03	No		17	vapor			7.14E-12	2.55E-14	2.55E-14
123	62-75-9	N-Nitroso-N,N-dimethylamine (Dimethylnitrosamine)	4.29E-02	Yes	9	9	vapor	2.17E-05	5.08E-04		2.17E-05	2.17E-05
124	630-20-6	1,1,1,2-Tetrachloroethane	7.14E-03	No		18	vapor			3.43E-11	2.45E-13	2.45E-13
125	64-17-5	Ethyl alcohol	7.14E-03	No		10	vapor			2.58E-04	1.83E-06	1.83E-06
126	64-18-6	Formic acid	1.07E+01	No		7	vapor			3.77E-04	4.04E-03	4.04E-03
127	64-19-7	Acetic acid	1.55E+01	Yes	6	6	vapor	4.58E-08	2.98E-09		4.58E-08	4.58E-08
128	67-56-1	Methyl alcohol (Methanol)	7.14E-03	No		10	vapor			2.58E-04	1.83E-06	1.83E-06
129	67-63-0	2-Propyl alcohol (Isopropanol, Propan-2-ol)	1.43E-03	No		11	vapor			1.20E-04	1.72E-07	1.72E-07
130	67-64-1	2-Propanone (Acetone)	1.43E-02	No		13	vapor			1.24E-05	1.78E-07	1.78E-07
131	67-66-3	Chloroform	2.86E-03	No		19	vapor			2.04E-14	5.83E-17	0.00E+00
132	67-72-1	Hexachloroethane	4.29E-02	No		19	vapor			2.04E-14	8.75E-16	0.00E+00
133	684-16-2	Hexafluoroacetone	7.14E-03	No		19	vapor			2.04E-14	1.46E-16	0.00E+00
134	71-23-8	n-Propyl alcohol	2.86E-03	No		11	vapor			1.20E-04	3.43E-07	3.43E-07
135	71-36-3	n-Butyl alcohol	7.14E-03	No		11	vapor			1.20E-04	8.56E-07	8.56E-07
136	71-43-2	Benzene	2.86E-03	Yes	19	19	vapor	0.00E+00	0.00E+00		0.00E+00	0.00E+00
137	71-55-6	Methyl chloroform (1,1,1-Trichloroethane)	2.86E-03	No		21	vapor			0.00E+00	0.00E+00	0.00E+00
138	74-83-9	Bromomethane (Methyl bromide)	2.86E-03	No		19	vapor			2.04E-14	5.83E-17	0.00E+00
139	74-87-3	Chloromethane (Methyl chloride)	2.86E-03	No		20	vapor			0.00E+00	0.00E+00	0.00E+00
140	74-97-5	Bromochloromethane	7.14E-03	No		17	vapor			7.14E-12	5.10E-14	5.10E-14
141	74-99-7	Methylacetylene	4.29E-02	No		20	vapor			0.00E+00	0.00E+00	0.00E+00
142	75-00-3	Chloroethane	2.86E-03	No		20	vapor			0.00E+00	0.00E+00	0.00E+00
143	75-01-4	Vinyl chloride (1-Chloroethene)	2.86E-03	No		22	vapor			0.00E+00	0.00E+00	0.00E+00
144	75-05-8	Acetonitrile	7.14E-03	Yes	13	13	vapor	1.23E-07	1.72E-05		1.23E-07	1.23E-07
145	75-07-0	Acetaldehyde	4.29E-02	No		13	vapor			1.24E-05	5.33E-07	5.33E-07
146	75-09-2	Dichloromethane (Methylene chloride)	2.86E-03	No		19	vapor			2.04E-14	5.83E-17	0.00E+00
147	75-12-7	Formamide	4.29E-02	Yes	4	4	vapor	2.02E-07	4.71E-06		2.02E-07	2.02E-07
148	75-15-0	Carbon disulfide	7.14E-03	No		20	vapor			0.00E+00	0.00E+00	0.00E+00
149	75-21-8	Ethylene oxide (Oxirane)	1.43E-03	No		15	vapor			6.25E-08	8.93E-11	8.93E-11
150	75-27-4	Bromodichloromethane	7.14E-03	No		18	vapor			3.43E-11	2.45E-13	2.45E-13
151	75-34-3	1,1-Dichloroethane	2.86E-03	No		19	vapor			2.04E-14	5.83E-17	0.00E+00
152	75-35-4	1,1-Dichloroethene (Vinylidene chloride)	7.14E-03	No		22	vapor			0.00E+00	0.00E+00	0.00E+00
153	75-43-4	Dichlorofluoromethane	2.86E-03	No		20	vapor			0.00E+00	0.00E+00	0.00E+00
154	75-45-6	Chlorodifluoromethane	2.86E-03	No		22	vapor			0.00E+00	0.00E+00	0.00E+00
155	75-50-3	Trimethylamine	7.14E-03	No		14	vapor			5.03E-07	3.59E-09	3.59E-09
156	75-52-5	Nitromethane	4.29E-02	No		13	vapor			1.24E-05	5.33E-07	5.33E-07
157	75-56-9	2-Methyloxirane	4.29E-02	No		11	vapor			1.20E-04	5.15E-06	5.15E-06
158	75-61-6	Difluorodibromomethane	7.14E-03	No		22	vapor			0.00E+00	0.00E+00	0.00E+00
159	75-63-8	Trifluorobromomethane	7.14E-03	No		25	vapor			0.00E+00	0.00E+00	0.00E+00
160	75-65-0	2-Methyl-2-propanol	7.14E-03	No		11	vapor			1.20E-04	8.56E-07	8.56E-07
161	75-69-4	Trichlorofluoromethane	7.14E-03	No		23	vapor			0.00E+00	0.00E+00	0.00E+00
162	75-71-8	Dichlorodifluoromethane	7.14E-03	No		25	vapor			0.00E+00	0.00E+00	0.00E+00
163	76-03-9	Trichloroacetic acid	7.14E-03	No		5	vapor			3.66E-05	2.61E-07	2.61E-07
164	76-11-9	1,1,1,2-Tetrachloro-2,2-difluoroethane	4.29E-02	No		24	vapor			0.00E+00	0.00E+00	0.00E+00
165	76-12-0	1,1,2,2-Tetrachloro-1,2-difluoroethane	4.29E-02	No		23	vapor			0.00E+00	0.00E+00	0.00E+00
166	76-13-1	1,2,2-Trichloro-1,1,2-trifluoroethane (Freon 113)	7.14E-03	No		26	vapor			0.00E+00	0.00E+00	0.00E+00
167	76-14-2	1,2-Dichloro-1,1,2,2-tetrafluoroethane	7.14E-03	No		28	vapor			0.00E+00	0.00E+00	0.00E+00
168	76-15-3	Chloropentafluoroethane	7.14E-03	Yes	29	29	vapor	0.00E+00	0.00E+00		0.00E+00	0.00E+00
169	78-83-1	2-Methylpropyl alcohol (Isobutyl alcohol)	4.29E-02	No		11	vapor			1.20E-04	5.15E-06	5.15E-06
170	78-87-5	1,2-Dichloropropane	2.86E-03	No		19	vapor			2.04E-14	5.83E-17	0.00E+00
171	78-92-2	1-Methylpropyl alcohol (2-Butanol)	2.86E-03	No		11	vapor			1.20E-04	3.43E-07	3.43E-07
172	78-93-3	Methyl ethyl ketone (MEK, 2-Butanone)	7.14E-03	No		13	vapor			1.24E-05	8.86E-08	8.86E-08
173	79-00-5	1,1,2-Trichloroethane	7.14E-03	No		17	vapor			7.14E-12	5.10E-14	5.10E-14
174	79-01-6	Trichloroethylene	7.14E-03	Yes	20	20	vapor	0.00E+00	0.00E+00		0.00E+00	0.00E+00
175	79-09-4	Propionic acid	4.29E-02	No		8	vapor			5.93E-04	2.54E-05	2.54E-05
176	79-10-7	2-Propenoic acid	5.72E-02	No		8	vapor			5.93E-04	3.39E-05	3.39E-05
177	79-20-9	Methyl acetate	4.29E-02	No		14	vapor			5.03E-07	2.16E-08	2.16E-08
178	79-34-5	1,1,2,2-Tetrachloroethane	1.36E-05	No		16	vapor			2.29E-09	3.09E-14	3.09E-14
179	83-32-9	Acenaphthene	4.29E-02	Yes	15	15	vapor	2.01E-11	4.69E-10		2.01E-11	2.01E-11
180	84-66-2	Diethyl phthalate	4.29E-02	Yes	8	8	vapor	2.72E-05	6.35E-04		2.72E-05	2.72E-05
181	84-74-2	Dibutyl phthalate	4.29E-02	Yes	31	31	particle bound	4.19E-05	9.78E-04		4.19E-05	4.19E-05
182	85-01-8	Phenanthrene	4.29E-02	No		13	particle bound			1.24E-05	5.33E-07	5.33E-07
183	85-68-7	Butylbenzyl phthalate	4.29E-02	No		31	particle bound			9.78E-04	4.19E-05	4.19E-05
184	86-73-7	Fluorene	4.29E-02	No		14	vapor			5.03E-07	2.16E-08	2.16E-08
185	87-68-3	Hexachlorobutadiene	7.14E-03	Yes	20	20	vapor	0.00E+00	0.00E+00		0.00E+00	0.00E+00
186	88-06-2	2,4,6-Trichlorophenol	4.29E-02	No		10	vapor			2.58E-04	1.10E-05	1.10E-05
187	88-72-2	2-Nitrotoluene	7.14E-03	No		12	vapor			8.64E-05	6.17E-07	6.17E-07
188	88-75-5	2-Nitrophenol	4.29E-02	No		12	vapor			8.64E-05	3.70E-06	3.70E-06
189	88-89-1	Picric acid	4.29E-02	Yes	2	2	N/A	2.48E-06	5.78E-05		2.48E-06	2.48E-06
190	91-20-3	Naphthalene	1.43E-02	Yes	16	16	vapor	6.29E-12	3.77E-08		6.29E-12	6.29E-12
191	91-22-5	Quinoline	4.29E-02	No		9	vapor			5.08E-04	2.17E-05	2.17E-05
192	91-58-7	2-Chloronaphthalene	4.29E-02	No		16	vapor			2.29E-09	9.82E-11	9.82E-11
193	92-52-4	1,1'-Biphenyl	2.86E-02	No		16	vapor			2.29E-09	6.48E-11	6.48E-11
194	92-93-3	4-Nitrobiphenyl	4.29E-02	No		10	particle bound			2.58E-04	1.10E-05	1.10E-05
195	95-13-6	Indene	4.29E-02	No		18	vapor			3.43E-11	1.47E-12	1.47E-12
196	95-47-6	o-Xylene	2.86E-03	No		19	vapor			2.04E-14	5.83E-17	0.00E+00
197	95-48-7	o-Cresol (2-Methylphenol)	7.14E-03	No		9	vapor			5.08E-04	3.61E-06	3.61E-06
198	95-49-8	2-Chlorotoluene	4.29E-02	No		19	vapor			2.04E-14	8.75E-16	0.00E+00
199	95-50-1	o-Dichlorobenzene (1,2-Dichlorobenzene)	2.86E-03	Yes	18	18	vapor	9.78E-14	3.43E-11		9.78E-14	9.78E-14
200	95-57-8	2-Chlorophenol	4.29E-02	No		11	vapor			1.20E-04	5.15E-06	5.15E-06
201	95-95-4	2,4,5-Trichlorophenol	4.29E-02	No		9	vapor			5.08E-04	2.17E-05	2.17E-05
202	96-22-0	3-Pentanone	1.43E-02	No		14	vapor			5.03E-07	7.18E-09	7.18E-09
203	96-69-5	Bis(3-tert-butyl-4-hydroxy-6-methylphenyl)sulfide	4.29E-02	No		19	vapor			2.04E-14	8.75E-16	0.00E+00
204	98-51-1	p-tert-Butyltoluene	4.29E-02	No		21	vapor			0.00E+00	0.00E+00	0.00E+00
205	98-82-8	Cumene	4.29E-02	No		20	vapor			0.00E+00	0.00E+00	0.00E+00
206	98-83-9	alpha-Methylstyrene	7.14E-03	No		19	vapor			2.04E-14	1.46E-16	0.00E+00
207	98-86-2	Acetophenone	2.86E-02	Yes	11	11	vapor	3.13E-06	1.09E-04		3.13E-06	3.13E-06
208	98-95-3	Nitrobenzene	2.86E-02	No		12	vapor			8.64E-05	2.47E-06	2.47E-06
209											4.88E-03	

Adjusted Performance Factors

Group	PF
1	1.91E-08
2	5.78E-05
3	4.86E-07
4	4.71E-06
5	3.66E-05
6	2.98E-09
7	3.77E-04
8	5.63E-04
9	5.08E-04
10	2.58E-04
11	1.20E-04
12	8.64E-05
13	1.24E-05
14	5.03E-07
15	6.25E-08
16	2.29E-09
17	7.14E-12
18	3.43E-11
19	2.04E-14
20	0.00E+00
21	0.00E+00
22	0.00E+00
23	0.00E+00
24	0.00E+00
25	0.00E+00
26	0.00E+00
27	0.00E+00
28	0.00E+00
29	0.00E+00
30	1.01E-03
31	9.78E-04
32	1.12E-04
33	7.44E-05
34	1.64E-09
35	8.45E-08

Coplanar PCBs

CAS #	Name	LVP01 g/sec	Corrected LVP01 g/sec
31508-00-6	2,3',4,4',5-Pentachlorobiphenyl (PBC 118)	1.05E-13	1.05E-13
32598-13-3	3,3',4,4'-Tetrachlorobiphenyl (TCB)	1.05E-13	1.05E-13
32598-14-4	2,3,3',4,4'-Pentachlorobiphenyl (PCB 105)	1.05E-13	1.05E-13
32774-16-6	3,3',4,4',5,5'-Hexachlorobiphenyl	1.05E-13	1.05E-13
35065-29-3	2,2',3,4,4',5,5'-Heptachlorobiphenyl	1.05E-13	1.05E-13
35065-30-6	2,2',3,3',4,4',5-Heptachlorobiphenyl	1.05E-13	1.05E-13
38380-08-4	2,3,3',4,4',5-Hexachlorobiphenyl (PCB 157)	1.05E-13	1.05E-13
39635-31-9	2,3,3',4,4',5,5'-Heptachlorobiphenyl	1.05E-13	1.05E-13
52663-72-6	2,3',4,4',5,5'-Hexachlorobiphenyl	1.05E-13	1.05E-13
57465-28-8	3,3',4,4',5-Pentachlorobiphenyl	1.05E-13	1.05E-13
65510-44-3	2',3,4,4',5-Pentachlorobiphenyl	1.05E-13	1.05E-13
69782-90-7	2,3,3',4,4',5'-Hexachlorobiphenyl	1.05E-13	1.05E-13
70362-50-4	3,4,4',5-Tetrachlorobiphenyl	1.05E-13	1.05E-13
74472-37-0	2,3,4,4',5-Pentachlorobiphenyl	1.05E-13	1.05E-13
1336-36-3	Polychlorinated biphenyls (PCBs)	1.45E-10	
1336-36-3	UnCorrected (for coplanar PCBs)	1.47E-10	

Correction for Coplanar PCBs
0.99 as parent
0.01 as coplanar sum

Table B-8 LVP18 - Abated LAW Melter Offgas System

Row	CAS #	COPC	LMP08 g/sec	Phase	Fv	Fraction vapor adjusted	Fraction particle	LOP08 g/sec vapor	LOP08 g/sec particle	LOP08 g/sec	LVP01 g/sec	LVP03 g/sec	LVP03 g/sec vapor	LVP03 g/sec particle	LVP18 g/sec	Corrected LVP18 g/sec
4	100-00-5	p-Nitrochlorobenzene	4.28E-04	vapor	1.000	1.000	0.000	4.28E-04	0.00E+00	4.28E-04	7.33E-06	4.34E-04	2.17E-05	0.00E+00	2.17E-05	2.17E-05
5	100-21-0	p-Phthalic acid	4.14E-01	vapor	1.000	1.000	0.000	4.14E-01	0.00E+00	4.14E-01	6.18E-10	4.14E-01	2.07E-02	0.00E+00	2.07E-02	2.07E-02
6	100-41-4	Ethyl benzene	0.00E+00	vapor	1.000	1.000	0.000	0.00E+00	0.00E+00	0.00E+00	0.00E+00	0.00E+00	0.00E+00	0.00E+00	0.00E+00	0.00E+00
7	100-42-5	Styrene	0.00E+00	vapor	1.000	1.000	0.000	0.00E+00	0.00E+00	0.00E+00	0.00E+00	0.00E+00	0.00E+00	0.00E+00	0.00E+00	0.00E+00
8	10061-01-5	cis-1,3-Dichloropropene	0.00E+00	vapor	1.000	1.000	0.000	0.00E+00	0.00E+00	0.00E+00	0.00E+00	0.00E+00	0.00E+00	0.00E+00	0.00E+00	0.00E+00
9	10061-02-6	trans-1,3-Dichloropropene	0.00E+00	vapor	1.000	1.000	0.000	0.00E+00	0.00E+00	0.00E+00	2.04E-14	2.04E-14	1.02E-15	0.00E+00	1.02E-15	1.02E-15
10	101-55-3	4-Bromophenylphenyl ether	4.33E-08	vapor	1.000	1.000	0.000	4.33E-08	0.00E+00	4.33E-08	2.18E-08	6.48E-08	3.24E-09	0.00E+00	3.24E-09	3.24E-09
11	101-84-8	Diphenyl ether	2.72E-13	vapor	1.000	1.000	0.000	2.72E-13	0.00E+00	2.72E-13	2.23E-12	2.50E-12	1.25E-13	0.00E+00	1.25E-13	1.25E-13
12	106-35-4	3-Heptanone	2.88E-09	vapor	1.000	1.000	0.000	2.88E-09	0.00E+00	2.88E-09	1.44E-09	4.32E-09	2.16E-10	0.00E+00	2.16E-10	2.16E-10
13	106-42-3	p-Xylene (Dimethyl benzene)	0.00E+00	vapor	1.000	1.000	0.000	0.00E+00	0.00E+00	0.00E+00	0.00E+00	0.00E+00	0.00E+00	0.00E+00	0.00E+00	0.00E+00
14	106-46-7	1,4-Dichlorobenzene	0.00E+00	vapor	1.000	1.000	0.000	0.00E+00	0.00E+00	0.00E+00	9.79E-14	9.79E-14	4.90E-15	0.00E+00	4.90E-15	4.90E-15
15	106-88-7	1,2-Epoxybutane	4.38E-10	vapor	1.000	1.000	0.000	4.38E-10	0.00E+00	4.38E-10	4.46E-10	8.84E-10	4.42E-11	0.00E+00	4.42E-11	4.42E-11
16	106-93-4	Ethylene dibromide (Dibromoethane)	4.42E-13	vapor	1.000	1.000	0.000	4.42E-13	0.00E+00	4.42E-13	1.98E-12	2.42E-12	1.21E-13	0.00E+00	1.21E-13	1.21E-13
17	106-97-8	Butane	0.00E+00	vapor	1.000	1.000	0.000	0.00E+00	0.00E+00	0.00E+00	0.00E+00	0.00E+00	0.00E+00	0.00E+00	0.00E+00	0.00E+00
18	106-99-0	1,3-Butadiene	0.00E+00	vapor	1.000	1.000	0.000	0.00E+00	0.00E+00	0.00E+00	0.00E+00	0.00E+00	0.00E+00	0.00E+00	0.00E+00	0.00E+00
19	107-02-8	Acrolein	7.21E-09	vapor	1.000	1.000	0.000	7.21E-09	0.00E+00	7.21E-09	3.58E-09	1.08E-08	5.40E-10	0.00E+00	5.40E-10	5.40E-10
20	107-05-1	3-Chloropropene (Allyl chloride)	0.00E+00	vapor	1.000	1.000	0.000	0.00E+00	0.00E+00	0.00E+00	0.00E+00	0.00E+00	0.00E+00	0.00E+00	0.00E+00	0.00E+00
21	107-06-2	1,2-Dichloroethane (Ethylene chloride)	0.00E+00	vapor	1.000	1.000	0.000	0.00E+00	0.00E+00	0.00E+00	2.04E-14	2.04E-14	1.02E-15	0.00E+00	1.02E-15	1.02E-15
22	107-12-0	Propionitrile	5.34E-07	vapor	1.000	1.000	0.000	5.34E-07	0.00E+00	5.34E-07	8.89E-08	6.23E-07	3.11E-08	0.00E+00	3.11E-08	3.11E-08
23	107-13-1	Acrylonitrile	1.44E-08	vapor	1.000	1.000	0.000	1.44E-08	0.00E+00	1.44E-08	7.19E-09	2.16E-08	1.08E-09	0.00E+00	1.08E-09	1.08E-09
24	107-18-6	2-Propene-1-ol	6.40E-04	vapor	1.000	1.000	0.000	6.40E-04	0.00E+00	6.40E-04	1.10E-05	6.51E-04	3.25E-05	0.00E+00	3.25E-05	3.25E-05
25	107-31-3	Formic acid, methyl ester	2.83E-09	vapor	1.000	1.000	0.000	2.83E-09	0.00E+00	2.83E-09	2.48E-09	5.31E-09	2.65E-10	0.00E+00	2.65E-10	2.65E-10
26	107-66-4	Dibutylphosphate	3.56E-02	particle bound	0.995	0.995	0.005	3.54E-02	4.48E-07	3.54E-02	1.59E-08	3.54E-02	1.78E-03	4.43E-11	1.78E-03	1.78E-03
27	107-87-9	2-Pentanone	1.44E-08	vapor	1.000	1.000	0.000	1.44E-08	0.00E+00	1.44E-08	7.18E-09	2.16E-08	1.08E-09	0.00E+00	1.08E-09	1.08E-09
28	108-03-2	1-Nitropropane	4.33E-08	vapor	1.000	1.000	0.000	4.33E-08	0.00E+00	4.33E-08	2.18E-08	6.48E-08	3.24E-09	0.00E+00	3.24E-09	3.24E-09
29	108-05-4	Vinyl acetate	3.57E-11	vapor	1.000	1.000	0.000	3.57E-11	0.00E+00	3.57E-11	9.88E-11	1.33E-10	6.63E-12	0.00E+00	6.63E-12	6.63E-12
30	108-10-1	Hexone (4-Methyl-2-pentanone or MIBK)	7.21E-09	vapor	1.000	1.000	0.000	7.21E-09	0.00E+00	7.21E-09	3.58E-09	1.08E-08	5.40E-10	0.00E+00	5.40E-10	5.40E-10
31	108-20-3	Bis(isopropyl)ether	0.00E+00	vapor	1.000	1.000	0.000	0.00E+00	0.00E+00	0.00E+00	2.45E-13	2.45E-13	1.22E-14	0.00E+00	1.22E-14	1.22E-14
32	108-38-3	m-Xylene (Dimethyl benzene)	0.00E+00	vapor	1.000	1.000	0.000	0.00E+00	0.00E+00	0.00E+00	0.00E+00	0.00E+00	0.00E+00	0.00E+00	0.00E+00	0.00E+00
33	108-39-4	m-Cresol	4.99E-04	vapor	1.000	1.000	0.000	4.99E-04	0.00E+00	4.99E-04	3.81E-06	5.03E-04	2.51E-05	0.00E+00	2.51E-05	2.51E-05
34	108-87-2	Methylcyclohexane	0.00E+00	vapor	1.000	1.000	0.000	0.00E+00	0.00E+00	0.00E+00	0.00E+00	0.00E+00	0.00E+00	0.00E+00	0.00E+00	0.00E+00
35	108-88-3	Toluene	0.00E+00	vapor	1.000	1.000	0.000	0.00E+00	0.00E+00	0.00E+00	0.00E+00	0.00E+00	0.00E+00	0.00E+00	0.00E+00	0.00E+00
36	108-90-7	Chlorobenzene	0.00E+00	vapor	1.000	1.000	0.000	0.00E+00	0.00E+00	0.00E+00	0.00E+00	0.00E+00	0.00E+00	0.00E+00	0.00E+00	0.00E+00
37	108-93-0	Cyclohexanol	1.07E-04	vapor	1.000	1.000	0.000	1.07E-04	0.00E+00	1.07E-04	1.83E-06	1.08E-04	5.42E-06	0.00E+00	5.42E-06	5.42E-06
38	108-94-1	Cyclohexanone	2.24E-05	vapor	1.000	1.000	0.000	2.24E-05	0.00E+00	2.24E-05	8.56E-07	2.33E-05	1.16E-06	0.00E+00	1.16E-06	1.16E-06
39	108-95-2	Phenol	1.78E-02	vapor	1.000	1.000	0.000	1.78E-02	0.00E+00	1.78E-02	2.38E-05	1.79E-02	8.93E-04	0.00E+00	8.93E-04	8.93E-04
40	109-66-0	n-Pentane	0.00E+00	vapor	1.000	1.000	0.000	0.00E+00	0.00E+00	0.00E+00	0.00E+00	0.00E+00	0.00E+00	0.00E+00	0.00E+00	0.00E+00
41	109-99-9	Tetrahydrofuran	2.14E-07	vapor	1.000	1.000	0.000	2.14E-07	0.00E+00	2.14E-07	3.56E-08	2.49E-07	1.25E-08	0.00E+00	1.25E-08	1.25E-08
42	110-12-3	5-Methyl-2-hexanone	1.75E-10	vapor	1.000	1.000	0.000	1.75E-10	0.00E+00	1.75E-10	1.78E-10	3.54E-10	1.77E-11	0.00E+00	1.77E-11	1.77E-11
43	110-43-0	2-Heptanone	1.75E-10	vapor	1.000	1.000	0.000	1.75E-10	0.00E+00	1.75E-10	1.78E-10	3.54E-10	1.77E-11	0.00E+00	1.77E-11	1.77E-11
44	110-54-3	n-Hexane	0.00E+00	vapor	1.000	1.000	0.000	0.00E+00	0.00E+00	0.00E+00	0.00E+00	0.00E+00	0.00E+00	0.00E+00	0.00E+00	0.00E+00
45	110-62-3	n-Valeraldehyde	2.83E-09	vapor	1.000	1.000	0.000	2.83E-09	0.00E+00	2.83E-09	2.48E-09	5.31E-09	2.65E-10	0.00E+00	2.65E-10	2.65E-10
46	110-82-7	Cyclohexane	0.00E+00	vapor	1.000	1.000	0.000	0.00E+00	0.00E+00	0.00E+00	0.00E+00	0.00E+00	0.00E+00	0.00E+00	0.00E+00	0.00E+00
47	110-83-8	Cyclohexene	0.00E+00	vapor	1.000	1.000	0.000	0.00E+00	0.00E+00	0.00E+00	0.00E+00	0.00E+00	0.00E+00	0.00E+00	0.00E+00	0.00E+00
48	110-86-1	Pyridine	4.48E-05	vapor	1.000	1.000	0.000	4.48E-05	0.00E+00	4.48E-05	1.72E-06	4.65E-05	2.33E-06	0.00E+00	2.33E-06	2.33E-06
49	111-65-9	n-Octane	0.00E+00	vapor	1.000	1.000	0.000	0.00E+00	0.00E+00	0.00E+00	0.00E+00	0.00E+00	0.00E+00	0.00E+00	0.00E+00	0.00E+00
50	111-76-2	Ethylene glycol monobutyl ether	3.00E-03	vapor	1.000	1.000	0.000	3.00E-03	0.00E+00	3.00E-03	2.17E-06	3.02E-03	1.51E-04	0.00E+00	1.51E-04	1.51E-04
51	111-84-2	n-Nonane	0.00E+00	vapor	1.000	1.000	0.000	0.00E+00	0.00E+00	0.00E+00	0.00E+00	0.00E+00	0.00E+00	0.00E+00	0.00E+00	0.00E+00
52	117-81-7	Bis(2-ethylhexyl)phthalate (DEHP)	1.88E-02	particle bound	0.130	0.130	0.870	2.42E-03	4.05E-05	2.46E-03	4.33E-06	2.50E-03	1.33E-05	8.44E-10	1.83E-05	1.83E-05
53	117-84-0	n-Dioctyl phthalate	2.23E-04	particle bound	0.852	0.852	0.148	1.90E-04	8.24E-08	1.90E-04	4.62E-06	1.95E-04	8.29E-06	7.20E-12	8.29E-06	8.29E-06
54	120-12-7	Anthracene	1.19E-08	particle bound	0.998	0.998	0.002	1.19E-08	5.94E-12	1.19E-08	3.20E-09	1.51E-08	7.56E-10	7.57E-16	7.56E-10	7.56E-10
55	120-82-1	1,2,4-Trichlorobenzene	0.00E+00	vapor	1.000	1.000	0.000	0.00E+00	0.00E+00	0.00E+00	5.10E-14	5.10E-14	2.55E-15	0.00E+00	2.55E-15	2.55E-15
56	120-83-2	2,4-Dichlorophenol	6.40E-04	vapor	1.000	1.000	0.000	6.40E-04	0.00E+00	6.40E-04	1.10E-05	6.51E-04	3.25E-05	0.00E+00	3.25E-05	3.25E-05
57	121-44-8	Triethylamine	4.38E-10	vapor	1.000	1.000	0.000	4.38E-10	0.00E+00	4.38E-10	4.46E-10	8.84E-10	4.42E-11	0.00E+00	4.42E-11	4.42E-11
58	121-69-7	Dimethylaniline	5.34E-07	vapor	1.000	1.000	0.000	5.34E-07	0.00E+00	5.34E-07	8.89E-08	6.23E-07	3.11E-08	0.00E+00	3.11E-08	3.11E-08
59	122-39-4	N,N-Diphenylamine	4.28E-04	vapor	1.000	1.000	0.000	4.28E-04	0.00E+00	4.28E-04	7.33E-06	4.34E-04	2.17E-05	0.00E+00	2.17E-05	2.17E-05
60	123-19-3	4-Heptanone	2.14E-07	vapor	1.000	1.000	0.000	2.14E-07	0.00E+00	2.14E-07	3.56E-08	2.49E-07	1.25E-08	0.00E+00	1.25E-08	1.25E-08
61	123-38-6	n-Propionaldehyde	1.44E-08	vapor	1.000	1.000	0.000	1.44E-08	0.00E+00	1.44E-08	7.18E-09	2.16E-08	1.08E-09	0.00E+00	1.08E-09	1.08E-09
62	123-51-3	3-Methyl-1-butanol	1.23E-05	vapor	1.000	1.000	0.000	1.23E-05	0.00E+00	1.23E-05	6.17E-07	1.30E-05	6.48E-07	0.00E+00	6.48E-07	6.48E-07
63	123-86-4	Acetic acid n-butyl ester	1.13E-13	vapor	1.000	1.000	0.000	1.13E-13	0.00E+00	1.13E-13	3.06E-13	4.18E-13	2.09E-14	0.00E+00	2.09E-14	2.09E-14
64	123-91-1	1,4-Dioxane	2.13E-05	vapor	1.000	1.000	0.000	2.13E-05	0.00E+00	2.13E-05	3.86E-07	2.17E-05	1.08E-06	0.00E+00	1.08E-06	1.08E-06
65	126-73-8	Tributyl phosphate	1.81E-02	particle bound	0.996	0.996	0.004	1.80E-02	1.81E-07	1.80E-02	1.08E-06	1.80E-02	8.98E-04	1.80E-11	8.98E-04	8.98E-04
66	126-98-7	2-Methyl-2-propenenitrile (Methacrylonitrile)	5.86E-12	vapor	1.000	1.000	0.000	5.86E-12	0.00E+00	5.86E-12	1.81E-11	2.21E-11	1.10E-12	0.00E+00	1.10E-12	1.10E-12
67	127-18-4	Perchloroethylene (tetrachloroethylene)	0.00E+00	vapor	1.000	1.000	0.000	0.00E+00	0.00E+00	0.00E+00	0.00E+00	0.00E+00	0.00E+00	0.00E+00	0.00E+00	0.00E+00
68	127-19-5	N,N-Dimethylacetamide	5.93E-03	vapor	1.000	1.000	0.000	5.93E-03	0.00E+00	5.93E-03	2.83E-07	5.93E-03	2.97E-04	0.00E+00	2.97E-04	2.97E-04
69	128-37-0	2,6-Bis(tert-butyl)-4-methylphenol	7.43E-05	vapor	1.000	1.000	0.000	7.43E-05	0.00E+00	7.43E-05	1.91E-06	7.58E-05	3.79E-06	0.00E+00	3.79E-06	3.79E-06
70	129-00-0	Pyrene	1.08E-04	particle bound	0.994	0.994	0.006	1.08E-04	1.59E-09	1.08E-04	6.38E-06	1.12E-04	5.58E-06	1.88E-13	5.58E-06	5.58E-06
71	1321-64-8	Pentachloronaphthalene	2.79E-12	particle bound	0.971	0.971	0.029	2.68E-12	2.00E-16	2.68E-12	2.28E-11	2.52E-11	1.23E-12	1.83E-19	1.23E-12	1.23E-12
72	1321-65-9	Trichloronaphthalene	2.80E-09	particle bound	0.999	0.999	0.001	2.80E-09	6.37E-15	2.80E-09	2.49E-09	5.30E-09	2.65E-10	1.33E-18	2.65E-10	2.65E-10
73	132-64-9	Dibenzofuran	5.26E-09	particle bound	0.999	0.999	0.001	5.26E-09	1.31E-14	5.26E-09	5.33E-09	1.06E-08	5.29E-10	1.56E-18	5.29E-10	5.29E-10
74	1335-87-1	Hexachloronaphthalene	4.33E-08	particle bound	0.984	0.984	0.016	4.26E-08	1.73E-12	4.26E-08	2.16E-08	6.41E-08	3.16E-09	2.57E-16	3.16E-09	3.16E-09
75	1335-88-2	Tetrachloronaphthalene	2.80E-09	particle bound	0.991	0.991	0.009	2.80E-09	5.81E-14	2.80E-09	2.49E-09	5.29E-09	2.62E-10	1.16E-17	2.62E-10	2.62E-10
76	1336-36-3	Polychlorinated biphenyls (PCBs)	5.82E-11	vapor	1.000	1.000	0.000	5.82E-11	0.00E+00	5.82E-11	1.45E-10	2.03E-10	1.02E-11	0.00E+00	1.02E-11	1.02E-11
77	141-78-6	Acetic acid ethyl ester (Ethyl acetate)	1.37E-10	vapor	1.000	1.000	0.000	1.37E-10	0.00E+00	1.37E-10	6.80E-11	2.05E-10	1.02E-11	0.00E+00	1.02E-11	1.02E-11
78	141-79-7	4-Methyl-3-penten-2-one	3.20E-06	vapor	1.000	1.000	0.000	3.20E-06	0.00E+00	3.20E-06	5.33E-07	3.74E-06	1.87E-07	0.00E+00	1.87E-07	1.87E-07
79	142-82-5	n-Heptane	0.00E+00	vapor	1.000	1.000	0.000	0.00E+00	0.00E+00	0.00E+00	0.00E+00	0.00E+00	0.00E+00	0.00E+00	0.00E+00	0.00E+00
80	144-62-7	Oxalic acid	1.63E+00	vapor	1.000	1.000	0.000	1.63E+00	0.00E+00	1.63E+00	1.04E-08	1.63E+00	8.16E-02	0.00E+00	8.16E-02	8.16E-02
81	156-60-5	trans-1,2-Dichloroethylene	0.00E+00	vapor	1.000	1.000	0.000	0.00E+00	0.00E+00	0.00E+00	0.00E+00	0.00E+00	0.00E+00	0.00E+00	0.00E+00	0.00E+00
82	1634-04-4	Methyl tert-butyl ether	5.86E-12	vapor	1.000	1.000	0.000	5.86E-12	0.00E+00	5.86E-12	1.61E-11	2.21E-11	1.10E-12	0.00E+00	1.10E-12	1.10E-12
83	189-55-9	Dibenzo[a,i]pyrene	3.58E-02	particle	0.000	0.000	1.000	0.00E+00	8.95E-06	8.95E-06	1.58E-06	9.05E-06	0.00E+00	2.26E-11	2.26E-11	2.26E-11
84	189-64-0	Dibenzo[a,h]pyrene	3.58E-02	particle	0.000	0.000	1.000	0.00E+00	8.95E-06	8.95E-06	1.58E-06	9.05E-06	0.00E+00	2.26E-11	2.26E-11	2.26E-11
85	191-24-2	Benzo(g,h,i)perylene	1.88E-02	particle bound	0.065	0.065	0.935	1.21E-03	4.35E-05	1.25E-03	4.33E-06	1.30E-03	4.21E-05	3.03E-10	4.21E-05	4.21E-05
86	191-30-0	Dibenzo(a,l)pyrene	3.58E-02	particle	0.000	0.000	1.000	0.00E+00	8.95E-06	8.95E-06	1.58E-06	9.05E-06	0.00E+00	2.26E-11	2.26E-11	2.26E-11
87	192-65-4	Dibenzo(a,e)pyrene	3.58E-02	particle	0.000	0.000	1.000	0.00E+00	8.95E-06	8.95E-06	1.58E-06	9.05E-06	0.00E+00	2.26E-11	2.26E-11	2.26E-11
88	193-39-5	Indeno(1,2,3-cd)pyrene	5.91E-10	particle	0.000	0.000	1.000	0.00E+00	1.48E-12	1.48E-12	5.03E-09	5.03E-09	0.00E+00	1.26E-15	1.26E-15	1.26E-15
89	206-44-0	Fluoranthene	1.27E-11	particle bound	0.992	0.992	0.008	1.26E-11	2.54E-16	1.26E-11	1.04E-10	1.17E-10	5.79E-12	2.34E-19	5.79E-12	5.79E-12
90	208-96-8	Acenaphthylene	8.85E-08	vapor	1.000	1.000	0.000	8.85E-08	0.00E+00	8.85E-08	4.31E-08	1.30E-07	6.48E-09	0.00E+00	6.48E-09	6.48E-09
91	2234-13-1	Octachloronaphthalene	1.37E-10	particle bound	0.629	0.629	0.371	8.59E-11	1.27E-13	8.60E-11	6.80E-11	1.54E-10	4.84E-12	1.43E-17	4.84E-12	4.84E-12
92	224-42-0	Dibenz(a,j)acridine	3.65E-02	particle bound	0.241	0.241	0.759	8.79E-03	6.92E-05	8.86E-03	2.22E-07	8.86E-03	1.07E-04	1.60E-09	1.07E-04	1.07E-04
93	226-36-8	Dibenz(a,h)acridine	3.65E-02	particle bound	0.285	0.285	0.715	1.04E-02	6.52E-05	1.05E-02	2.02E-07	1.05E-02	1.49E-04	1.67E-09	1.49E-04	1.49E-04
94	25551-13-7	Trimethyl benzene	0.00E+00	vapor	1.000	1.000	0.000	0.00E+00	0.00E+00	0.00E+00	0.00E+00	0.00E+00	0.00E+00	0.00E+00	0.00E+00	0.00E+00
95	26140-60-3	Terphenyls	8.59E-12	particle bound	0.872	0.872	0.128	7.49E-12	2.74E-15	7.49E-12	7.03E-11	7.77E-11	3.38E-12	2.46E-19	3.38E-12	3.38E-12
96	27154-33-2	Trichlorofluoroethane	0.00E+00	vapor	1.000	1.000	0.000	0.00E+00	0.00E+00	0.00E+00	0.00E+00	0.00E+00	0.00E+00	0.00E+00	0.00E+00	0.00E+00
97	287-92-3	Cyclopentane	0.00E+00	vapor	1.000	1.000	0.000	0.00E+00	0.00E+00	0.00E+00	0.00E+00	0.00E+00	0.00E+00	0.00E+00	0.00E+00	0.00E+00
98	3697-24-3	5-Methylchrysene	1.37E-11	particle bound	0.823	0.823	0.177	1.12E-11	6.06E-16	1.12E-11	1.12E-10	1.23E-10	5.07E-12	5.45E-19	5.07E-12	5.07E-12
99	3825-26-1	Ammonium perfluorooctanoate	4.33E-08	vapor	1.000	1.000	0.000	4.33E-08	0.00E+00	4.33E-08	2.18E-08	6.48E-08	3.24E-09	0.00E+00	3.24E-09	3.24E-09
100	4170-30-3	2-Butenaldehyde (2-Butenal or Crotonaldehyde)	2.19E-05	vapor	1.000	1.000	0.000	2.19E-05	0.00E+00	2.19E-05	8.49E-07	2.27E-05	1.14E-06	0.00E+00	1.14E-06	1.14E-06
101	50-00-0	Formaldehyde	2.42E-03	vapor	1.000	1.000	0.000	2.42E-03	0.00E+00	2.42E-03	6.24E-08	2.43E-03	1.21E-04	0.00E+00	1.21E-04	1.21E-04
102	50-32-8	Benzo(a)pyrene	2.38E-02	particle bound	0.290	0.290	0.710	6.84E-03	4.16E-05	6.88E-03	6.40E-08	6.93E-03	1.81E-04	1.33E-09	1.81E-04	1.81E-04
103	53-70-3	Dibenz(a,h)anthracene	1.72E-02	particle bound	0.054	0.054	0.946	9.28E-04	4.08E-05	9.67E-04	1.02E-05	9.77E-04	2.64E-05	2.31E-10	2.64E-05	2.64E-05
104	540-59-0	1,2-Dichloroethylene	0.00E+00	vapor	1.000	1.000	0.000	0.00E+00	0.00E+00	0.00E+00	0.00E+00	0.00E+00	0.00E+00	0.00E+00	0.00E+00	0.00E+00
105	540-84-1	2,2,4-Trimethylpentane	0.00E+00	vapor	1.000	1.000	0.000	0.00E+00	0.00E+00	0.00E+00	0.00E+00	0.00E+00	0.00E+00	0.00E+00	0.00E+00	0.00E+00
106	541-73-1	1,3-Dichlorobenzene	0.00E+00	vapor	1.000	1.000	0.000	0.00E+00	0.00E+00	0.00E+00	0.00E+00	0.00E+00	0.00E+00	0.00E+00	0.00E+00	0.00E+00
107	56-23-5	Carbon tetrachloride	0.00E+00	vapor	1.000	1.000	0.000	0.00E+00	0.00E+00	0.00E+00	0.00E+00	0.00E+00	0.00E+00	0.00E+00	0.00E+00	0.00E+00
108	563-80-4	3-Methyl-2-butanone	7.21E-09	vapor	1.000	1.000	0.000	7.21E-09	0.00E+00	7.21E-09	3.58E-09	1.08E-08	5.40E-10	0.00E+00	5.40E-10	5.40E-10
109	56-49-5	3-Methylcholanthrene	0.00E+00	particle bound	0.364	0.364	0.636	0.00E+00	0.00E+00	0.00E+00	0.00E+00	0.00E+00	0.00E+00	0.00E+00	0.00E+00	0.00E+00
110	57-14-7	1,1-Dimethylhydrazine	7.41E-05	vapor	1.000	1.000	0.000	7.41E-05	0.00E+00	7.41E-05	3.70E-06	7.78E-05	3.89E-06	0.00E+00	3.89E-06	3.89E-06
111	58-90-2	2,3,4,6-Tetrachlorophenol	1.60E-04	vapor	1.000	1.000	0.000	1.60E-04	0.00E+00	1.60E-04	5.08E-06	1.65E-04	8.30E-06	0.00E+00	8.30E-06	8.30E-06
112	591-78-6	2-Hexanone	7.21E-09	vapor	1.000	1.000	0.000	7.21E-09	0.00E+00	7.21E-09	3.58E-09	1.08E-08	5.40E-10	0.00E+00	5.40E-10	5.40E-10
113	59-50-7	4-Chloro-3-methylphenol	2.23E-04	vapor	1.000	1.000	0.000	2.23E-04	0.00E+00	2.23E-04	4.82E-06	2.28E-04	1.14E-05	0.00E+00	1.14E-05	1.14E-05
114	59-89-2	N-Nitrosomorpholine	1.65E-11	vapor	1.000	1.000	0.000	1.65E-11	0.00E+00	1.65E-11	1.27E-10	1.43E-10	7.14E-12	0.00E+00	7.14E-12	7.14E-12
115	602-87-9	5-Nitroacenaphthene	3.00E-03	particle bound	0.997	0.997	0.003	2.99E-03	2.29E-08	2.99E-03	2.17E-06	3.01E-03	1.50E-04	2.29E-12	1.50E-04	1.50E-04
116	60-29-7	Ethyl ether	0.00E+00	vapor	1.000	1.000	0.000	0.00E+00	0.00E+00	0.00E+00	3.06E-13	3.06E-13	1.53E-14	0.00E+00	1.53E-14	1.53E-14
117	603-34-9	Triphenylamine	4.46E-04	vapor	1.000	1.000	0.000	4.46E-04	0.00E+00	4.46E-04	9.63E-06	4.55E-04	2.28E-05	0.00E+00	2.28E-05	2.28E-05
118	60-34-4	Methylhydrazine	1.07E-04	vapor	1.000	1.000	0.000	1.07E-04	0.00E+00	1.07E-04	1.83E-06	1.08E-04	5.42E-06	0.00E+00	5.42E-06	5.42E-06
119	60-35-5	Acetamide	5.93E-03	vapor	1.000	1.000	0.000	5.93E-03	0.00E+00	5.93E-03	2.83E-07	5.93E-03	2.97E-04	0.00E+00	2.97E-04	2.97E-04
120	621-64-7	Di-n-Propylnitrosamine (N-Nitroso-di-n-propylamine)	1.37E-11	vapor	1.000	1.000	0.000	1.37E-11	0.00E+00	1.37E-11	1.10E-05	1.10E-05	5.49E-07	0.00E+00	5.49E-07	5.49E-07
121	624-83-9	Methyl isocyanate	0.00E+00	vapor	1.000	1.000	0.000	0.00E+00	0.00E+00	0.00E+00	5.10E-14	5.10E-14	2.55E-15	0.00E+00	2.55E-15	2.55E-15
122	627-13-4	Nitric acid, propyl ester	0.00E+00	vapor	1.000	1.000	0.000	0.00E+00	0.00E+00	0.00E+00	2.35E-14	2.35E-14	1.18E-15	0.00E+00	1.18E-15	1.18E-15
123	62-75-9	N-Nitroso-N,N-dimethylamine (Dimethylnitrosamine)	3.00E-03	vapor	1.000	1.000	0.000	3.00E-03	0.00E+00	3.00E-03	2.17E-06	3.02E-03	1.51E-04	0.00E+00	1.51E-04	1.51E-04
124	630-20-6	1,1,1,2-Tetrachloroethane	0.00E+00	vapor	1.000	1.000	0.000	0.00E+00	0.00E+00	0.00E+00	2.45E-13	2.45E-13	1.22E-14	0.00E+00	1.22E-14	1.22E-14
125	64-17-5	Ethyl alcohol	1.07E-04	vapor	1.000	1.000	0.000	1.07E-04	0.00E+00	1.07E-04	1.83E-06	1.08E-04	5.42E-06	0.00E+00	5.42E-06	5.42E-06
126	64-18-6	Formic acid	6.77E+00	vapor	1.000	1.000	0.000	6.77E+00	0.00E+00	6.77E+00	4.04E-03	6.78E+00	3.39E-01	0.00E+00	3.39E-01	3.39E-01
127	64-19-7	Acetic acid	5.00E-08	vapor	1.000	1.000	0.000	5.00E-08	0.00E+00	5.00E-08	4.89E-08	5.19E-08	2.57E-09	0.00E+00	2.57E-09	2.57E-09
128	67-56-1	Methyl alcohol (Methanol)	1.07E-04	vapor	1.000	1.000	0.000	1.07E-04	0.00E+00	1.07E-04	1.83E-06	1.08E-04	5.42E-06	0.00E+00	5.42E-06	5.42E-06
129	67-63-0	2-Propyl alcohol (Isopropanol, Propan-2-ol)	4.46E-06	vapor	1.000	1.000	0.000	4.46E-06	0.00E+00	4.46E-06	1.72E-07	4.63E-06	2.33E-07	0.00E+00	2.33E-07	2.33E-07
130	67-64-1	2-Propanone (Acetone)	1.07E-06	vapor	1.000	1.000	0.000	1.07E-06	0.00E+00	1.07E-06	1.78E-07	1.25E-06	6.23E-08	0.00E+00	6.23E-08	6.23E-08
131	67-66-3	Chloroform	0.00E+00	vapor	1.000	1.000	0.000	0.00E+00	0.00E+00	0.00E+00	0.00E+00	0.00E+00	0.00E+00	0.00E+00	0.00E+00	0.00E+00
132	67-72-1	Hexachloroethane	0.00E+00	vapor	1.000	1.000	0.000	0.00E+00	0.00E+00	0.00E+00	0.00E+00	0.00E+00	0.00E+00	0.00E+00	0.00E+00	0.00E+00
133	684-16-2	Hexafluoroacetone	0.00E+00	vapor	1.000	1.000	0.000	0.00E+00	0.00E+00	0.00E+00	0.00E+00	0.00E+00	0.00E+00	0.00E+00	0.00E+00	0.00E+00
134	71-23-8	n-Propyl alcohol	8.97E-06	vapor	1.000	1.000	0.000	8.97E-06	0.00E+00	8.97E-06	3.43E-07	9.32E-06	4.66E-07	0.00E+00	4.66E-07	4.66E-07
135	71-36-3	n-Butyl alcohol	2.24E-05	vapor	1.000	1.000	0.000	2.24E-05	0.00E+00	2.24E-05	8.56E-07	2.33E-05	1.16E-06	0.00E+00	1.16E-06	1.16E-06
136	71-43-2	Benzene	0.00E+00	vapor	1.000	1.000	0.000	0.00E+00	0.00E+00	0.00E+00	0.00E+00	0.00E+00	0.00E+00	0.00E+00	0.00E+00	0.00E+00
137	71-55-6	Methyl chloroform (1,1,1-Trichloroethane)	0.00E+00	vapor	1.000	1.000	0.000	0.00E+00	0.00E+00	0.00E+00	0.00E+00	0.00E+00	0.00E+00	0.00E+00	0.00E+00	0.00E+00
138	74-83-9	Bromomethane (Methyl bromide)	0.00E+00	vapor	1.000	1.000	0.000	0.00E+00	0.00E+00	0.00E+00	0.00E+00	0.00E+00	0.00E+00	0.00E+00	0.00E+00	0.00E+00
139	74-87-3	Chloromethane (Methyl chloride)	0.00E+00	vapor	1.000	1.000	0.000	0.00E+00	0.00E+00	0.00E+00	0.00E+00	0.00E+00	0.00E+00	0.00E+00	0.00E+00	0.00E+00
140	74-97-5	Bromochloromethane	0.00E+00	vapor	1.000	1.000	0.000	0.00E+00	0.00E+00	0.00E+00	5.10E-14	5.10E-14	2.55E-15	0.00E+00	2.55E-15	2.55E-15
141	74-99-7	Methylacetylene	0.00E+00	vapor	1.000	1.000	0.000	0.00E+00	0.00E+00	0.00E+00	0.00E+00	0.00E+00	0.00E+00	0.00E+00	0.00E+00	0.00E+00
142	75-00-3	Chloroethane	0.00E+00	vapor	1.000	1.000	0.000	0.00E+00	0.00E+00	0.00E+00	0.00E+00	0.00E+00	0.00E+00	0.00E+00	0.00E+00	0.00E+00
143	75-01-4	Vinyl chloride (1-Chloroethene)	0.00E+00	vapor	1.000	1.000	0.000	0.00E+00	0.00E+00	0.00E+00	0.00E+00	0.00E+00	0.00E+00	0.00E+00	0.00E+00	0.00E+00
144	75-05-8	Acetonitrile	8.70E-07	vapor	1.000	1.000	0.000	8.70E-07	0.00E+00	8.70E-07	1.23E-07	9.93E-07	4.96E-08	0.00E+00	4.96E-08	4.96E-08
145	75-07-0	Acetaldehyde	3.20E-06	vapor	1.000	1.000	0.000	3.20E-06	0.00E+00	3.20E-06	5.33E-07	3.74E-06	1.87E-07	0.00E+00	1.87E-07	1.87E-07
146	75-09-2	Dichloromethane (Methylene chloride)	0.00E+00	vapor	1.000	1.000	0.000	0.00E+00	0.00E+00	0.00E+00	0.00E+00	0.00E+00	0.00E+00	0.00E+00	0.00E+00	0.00E+00
147	75-12-7	Formamide	3.65E-02	vapor	1.000	1.000	0.000	3.65E-02	0.00E+00	3.65E-02	2.02E-07	3.65E-02	1.82E-03	0.00E+00	1.82E-03	1.82E-03
148	75-15-0	Carbon disulfide	0.00E+00	vapor	1.000	1.000	0.000	0.00E+00	0.00E+00	0.00E+00	0.00E+00	0.00E+00	0.00E+00	0.00E+00	0.00E+00	0.00E+00
149	75-21-8	Ethylene oxide (Oxirane)	8.78E-11	vapor	1.000	1.000	0.000	8.78E-11	0.00E+00	8.78E-11	8.92E-11	1.77E-10	8.84E-12	0.00E+00	8.84E-12	8.84E-12
150	75-27-4	Bromodichloromethane	0.00E+00	vapor	1.000	1.000	0.000	0.00E+00	0.00E+00	0.00E+00	2.45E-13	2.45E-13	1.22E-14	0.00E+00	1.22E-14	1.22E-14
151	75-34-3	1,1-Dichloroethane	0.00E+00	vapor	1.000	1.000	0.000	0.00E+00	0.00E+00	0.00E+00	0.00E+00	0.00E+00	0.00E+00	0.00E+00	0.00E+00	0.00E+00
152	75-35-4	1,1-Dichloroethene (Vinylidene chloride)	0.00E+00	vapor	1.000	1.000	0.000	0.00E+00	0.00E+00	0.00E+00	0.00E+00	0.00E+00	0.00E+00	0.00E+00	0.00E+00	0.00E+00
153	75-43-4	Dichlorofluoromethane	0.00E+00	vapor	1.000	1.000	0.000	0.00E+00	0.00E+00	0.00E+00	0.00E+00	0.00E+00	0.00E+00	0.00E+00	0.00E+00	0.00E+00
154	75-45-6	Chlorodifluoromethane	0.00E+00	vapor	1.000	1.000	0.000	0.00E+00	0.00E+00	0.00E+00	0.00E+00	0.00E+00	0.00E+00	0.00E+00	0.00E+00	0.00E+00
155	75-50-3	Trimethylamine	7.21E-09	vapor	1.000	1.000	0.000	7.21E-09	0.00E+00	7.21E-09	3.58E-09	1.08E-08	5.40E-10	0.00E+00	5.40E-10	5.40E-10
156	75-52-5	Nitromethane	3.20E-06	vapor	1.000	1.000	0.000	3.20E-06	0.00E+00	3.20E-06	5.33E-07	3.74E-06	1.87E-07	0.00E+00	1.87E-07	1.87E-07
157	75-55-8	2-Methylaziridine	1.35E-04	vapor	1.000	1.000	0.000	1.35E-04	0.00E+00	1.35E-04	5.15E-06	1.40E-04	6.99E-06	0.00E+00	6.99E-06	6.99E-06
158	75-61-6	Dibromodifluoromethane	0.00E+00	vapor	1.000	1.000	0.000	0.00E+00	0.00E+00	0.00E+00	0.00E+00	0.00E+00	0.00E+00	0.00E+00	0.00E+00	0.00E+00
159	75-63-8	Trifluorobromomethane	0.00E+00	vapor	1.000	1.000	0.000	0.00E+00	0.00E+00	0.00E+00	0.00E+00	0.00E+00	0.00E+00	0.00E+00	0.00E+00	0.00E+00
160	75-65-0	2-Methyl-2-propanol	2.24E-05	vapor	1.000	1.000	0.000	2.24E-05	0.00E+00	2.24E-05	8.56E-07	2.33E-05	1.16E-06	0.00E+00	1.16E-06	1.16E-06
161	75-69-4	Trichlorofluoromethane	0.00E+00	vapor	1.000	1.000	0.000	0.00E+00	0.00E+00	0.00E+00	0.00E+00	0.00E+00	0.00E+00	0.00E+00	0.00E+00	0.00E+00
162	75-71-8	Dichlorodifluoromethane	0.00E+00	vapor	1.000	1.000	0.000	0.00E+00	0.00E+00	0.00E+00	0.00E+00	0.00E+00	0.00E+00	0.00E+00	0.00E+00	0.00E+00
163	76-03-9	Trichloroacetic acid	5.93E-03	vapor	1.000	1.000	0.000	5.93E-03	0.00E+00	5.93E-03	2.83E-07	5.93E-03	2.97E-04	0.00E+00	2.97E-04	2.97E-04
164	76-11-9	1,1,1,2-Tetrachloro-2,2-difluoroethane	0.00E+00	vapor	1.000	1.000	0.000	0.00E+00	0.00E+00	0.00E+00	0.00E+00	0.00E+00	0.00E+00	0.00E+00	0.00E+00	0.00E+00
165	76-12-0	1,1,2,2-Tetrachloro-1,2-difluoroethane	0.00E+00	vapor	1.000	1.000	0.000	0.00E+00	0.00E+00	0.00E+00	0.00E+00	0.00E+00	0.00E+00	0.00E+00	0.00E+00	0.00E+00
166	76-13-1	1,2,2-Trichloro-1,1,2-trifluoroethane (Freon 113)	0.00E+00	vapor	1.000	1.000	0.000	0.00E+00	0.00E+00	0.00E+00	0.00E+00	0.00E+00	0.00E+00	0.00E+00	0.00E+00	0.00E+00
167	76-14-2	1,2-Dichloro-1,1,2,2-tetrafluoroethane	0.00E+00	vapor	1.000	1.000	0.000	0.00E+00	0.00E+00	0.00E+00	0.00E+00	0.00E+00	0.00E+00	0.00E+00	0.00E+00	0.00E+00
168	76-15-3	Chloropentafluoroethane	0.00E+00	vapor	1.000	1.000	0.000	0.00E+00	0.00E+00	0.00E+00	0.00E+00	0.00E+00	0.00E+00	0.00E+00	0.00E+00	0.00E+00
169	78-83-1	2-Methylpropyl alcohol (Isobutyl alcohol)	1.35E-04	vapor	1.000	1.000	0.000	1.35E-04	0.00E+00	1.35E-04	5.15E-06	1.40E-04	6.99E-06	0.00E+00	6.99E-06	6.99E-06
170	78-87-5	1,2-Dichloropropane	0.00E+00	vapor	1.000	1.000	0.000	0.00E+00	0.00E+00	0.00E+00	0.00E+00	0.00E+00	0.00E+00	0.00E+00	0.00E+00	0.00E+00
171	78-92-2	1-Methylpropyl alcohol (2-Butanol)	8.97E-06	vapor	1.000	1.000	0.000	8.97E-06	0.00E+00	8.97E-06	3.43E-07	9.32E-06	4.66E-07	0.00E+00	4.66E-07	4.66E-07
172	78-93-3	Methyl ethyl ketone (MEK, 2-Butanone)	5.34E-07	vapor	1.000	1.000	0.000	5.34E-07	0.00E+00	5.34E-07	8.89E-08	6.23E-07	3.11E-08	0.00E+00	3.11E-08	3.11E-08
173	79-00-5	1,1,2-Trichloroethane	0.00E+00	vapor	1.000	1.000	0.000	0.00E+00	0.00E+00	0.00E+00	5.10E-14	5.10E-14	2.55E-15	0.00E+00	2.55E-15	2.55E-15
174	79-01-6	Trichloroethylene	0.00E+00	vapor	1.000	1.000	0.000	0.00E+00	0.00E+00	0.00E+00	0.00E+00	0.00E+00	0.00E+00	0.00E+00	0.00E+00	0.00E+00
175	79-09-4	Propionic acid	1.45E-02	vapor	1.000	1.000	0.000	1.45E-02	0.00E+00	1.45E-02	2.34E-05	1.46E-02	7.29E-04	0.00E+00	7.29E-04	7.29E-04
176	79-10-7	2-Propenoic acid	1.94E-02	vapor	1.000	1.000	0.000	1.94E-02	0.00E+00	1.94E-02	3.38E-05	1.94E-02	9.70E-04	0.00E+00	9.70E-04	9.70E-04
177	79-20-9	Methyl acetate	4.33E-08	vapor	1.000	1.000	0.000	4.33E-08	0.00E+00	4.33E-08	2.18E-08	6.48E-08	3.24E-09	0.00E+00	3.24E-09	3.24E-09
178	79-34-5	1,1,2,2-Tetrachloroethane	1.13E-14	vapor	1.000	1.000	0.000	1.13E-14	0.00E+00	1.13E-14	3.06E-14	4.18E-14	2.09E-15	0.00E+00	2.09E-15	2.09E-15
179	83-32-9	Acenaphthene	2.45E-12	vapor	1.000	1.000	0.000	2.45E-12	0.00E+00	2.45E-12	2.01E-11	2.26E-11	1.13E-12	0.00E+00	1.13E-12	1.13E-12
180	84-66-2	Diethyl phthalate	1.13E-02	vapor	1.000	1.000	0.000	1.13E-02	0.00E+00	1.13E-02	2.72E-06	1.13E-02	5.62E-04	0.00E+00	5.62E-04	5.62E-04
181	84-74-2	Dibutyl phthalate	4.55E-03	particle bound	0.998	0.998	0.002	4.54E-03	8.85E-09	4.54E-03	4.19E-06	4.58E-03	2.29E-04	8.87E-12	2.29E-04	2.29E-04
182	85-01-8	Phenanthrene	3.30E-06	particle bound	0.999	0.999	0.001	3.30E-06	8.01E-12	3.30E-06	5.33E-07	3.73E-06	1.87E-07	8.34E-15	1.87E-07	1.87E-07
183	85-68-7	Butylbenzyl phthalate	4.58E-03	particle bound	0.944	0.944	0.052	4.33E-03	8.93E-07	4.33E-03	4.19E-06	4.37E-03	2.07E-04	5.89E-11	2.07E-04	2.07E-04
184	86-73-7	Fluorene	4.33E-08	vapor	1.000	1.000	0.000	4.33E-08	0.00E+00	4.33E-08	2.18E-08	6.48E-08	3.24E-09	0.00E+00	3.24E-09	3.24E-09
185	87-68-3	Hexachlorobutadiene	0.00E+00	vapor	1.000	1.000	0.000	0.00E+00	0.00E+00	0.00E+00	0.00E+00	0.00E+00	0.00E+00	0.00E+00	0.00E+00	0.00E+00
186	88-06-2	2,4,6-Trichlorophenol	6.40E-04	vapor	1.000	1.000	0.000	6.40E-04	0.00E+00	6.40E-04	1.10E-05	6.51E-04	3.25E-05	0.00E+00	3.25E-05	3.25E-05
187	88-72-2	2-Nitrotoluene	1.23E-05	vapor	1.000	1.000	0.000	1.23E-05	0.00E+00	1.23E-05	6.17E-07	1.30E-05	6.48E-07	0.00E+00	6.48E-07	6.48E-07
188	88-75-5	2-Nitrophenol	7.41E-05	vapor	1.000	1.000	0.000	7.41E-05	0.00E+00	7.41E-05	3.70E-06	7.79E-05	3.89E-06	0.00E+00	3.89E-06	3.89E-06
189	88-89-1	Picric acid	1.87E-02	#N/A	0.934	0.934	0.066	1.43E-02	8.85E-08	1.43E-02	2.48E-09	1.43E-02	1.80E-03	5.88E-10	1.80E-03	1.80E-03

SBS and WESP general DF

	SBS	WESP	Total
Vapor	1	1	1
Particle	20	20	400

2ry Offgas General DF

	HEPA	S-AC	VOC Ox	SCR	NaOH Scr	Total
Vapor	1	1	20	1	1	20
Particle	200000	1	20	1	1	4,000,000

CALCULATION SHEET

BY: [illegible]
DATE: [illegible]

[illegible]
[illegible]
CALC NO: [illegible]
[illegible]
[illegible]

	A	B	C	D	E	F	G	H	I	J	K	L	M	N	O	P
1	Table B-8 LVP18 - Abated LAW Melter Offgas System					Fraction		LOPO6	LOPO6				LVPO2	LVPO3		Composite
2			LVPO6		Fv	vapor	Fraction	g/sec	g/sec	LOPO6	LVPO1	LVPO3	g/sec	g/sec	LVP18	LVP18
3	CAS #	COPC	g/sec	Phase		adjusted	particle	vapor	particle	g/sec	g/sec	g/sec	vapor	particle	g/sec	g/sec
180	91-20-3	Naphthalene	3.29E-12	vapor	1.000	1.000	0.000	3.29E-12	0.00E+00	3.29E-12	3.29E-12	1.15E-11	5.77E-13	0.00E+00	5.77E-13	5.77E-13
181	91-22-5	Quinoline	3.00E-03	vapor	1.000	1.000	0.000	3.00E-03	0.00E+00	3.00E-03	3.17E-06	3.02E-03	1.51E-04	0.00E+00	1.51E-04	1.51E-04
182	91-58-7	2-Chloronaphthalene	3.57E-11	vapor	1.000	1.000	0.000	3.57E-11	0.00E+00	3.57E-11	8.88E-11	1.33E-10	6.63E-12	0.00E+00	6.63E-12	6.63E-12
183	92-52-4	1,1-Biphenyl	2.34E-11	vapor	1.000	1.000	0.000	2.34E-11	0.00E+00	2.34E-11	8.88E-11	8.84E-11	4.42E-12	0.00E+00	4.42E-12	4.42E-12
184	92-93-3	4-Nitrobiphenyl	6.60E-04	particle (mg/m3)	0.999	0.999	0.001	6.39E-04	1.40E-06	6.39E-04	1.10E-06	6.50E-04	3.25E-05	1.62E-13	3.25E-05	3.25E-05
185	95-13-6	Indene	0.00E+00	vapor	1.000	1.000	0.000	0.00E+00	0.00E+00	0.00E+00	1.47E-12	1.47E-12	7.36E-14	0.00E+00	7.36E-14	7.36E-14
186	95-47-6	o-Xylene	0.00E+00	vapor	1.000	1.000	0.000	0.00E+00	0.00E+00	0.00E+00	0.00E+00	0.00E+00	0.00E+00	0.00E+00	0.00E+00	0.00E+00
187	95-48-7	o-Cresol (2-Methylphenol)	4.88E-04	vapor	1.000	1.000	0.000	4.88E-04	0.00E+00	4.88E-04	1.61E-06	3.02E-04	2.51E-06	0.00E+00	2.51E-06	2.51E-06
188	95-49-8	2-Chlorotoluene	0.00E+00	vapor	1.000	1.000	0.000	0.00E+00	0.00E+00	0.00E+00	0.00E+00	0.00E+00	0.00E+00	0.00E+00	0.00E+00	0.00E+00
189	95-50-1	o-Dichlorobenzene (1,2-Dichlorobenzene)	0.00E+00	vapor	1.000	1.000	0.000	0.00E+00	0.00E+00	0.00E+00	9.78E-14	9.78E-14	4.89E-15	0.00E+00	4.90E-15	4.90E-15
190	95-57-8	2-Chlorophenol	1.39E-04	vapor	1.000	1.000	0.000	1.39E-04	0.00E+00	1.39E-04	3.13E-09	1.40E-04	6.99E-09	0.00E+00	6.99E-09	6.99E-09
191	95-95-4	2,4,5-Trichlorophenol	3.00E-03	vapor	1.000	1.000	0.000	3.00E-03	0.00E+00	3.00E-03	3.17E-06	3.02E-03	1.51E-04	0.00E+00	1.51E-04	1.51E-04
192	96-22-0	3-Pentanone	1.44E-08	vapor	1.000	1.000	0.000	1.44E-08	0.00E+00	1.44E-08	2.18E-09	2.18E-09	1.09E-09	0.00E+00	1.09E-09	1.09E-09
193	96-69-5	(Bis(3-tert-butyl-4-hydroxy-6-methyl-phenyl)sulfide	0.00E+00	vapor	1.000	1.000	0.000	0.00E+00	0.00E+00	0.00E+00	0.00E+00	0.00E+00	0.00E+00	0.00E+00	0.00E+00	0.00E+00
194	98-51-1	p-tert-Butylbenzene	0.00E+00	vapor	1.000	1.000	0.000	0.00E+00	0.00E+00	0.00E+00	0.00E+00	0.00E+00	0.00E+00	0.00E+00	0.00E+00	0.00E+00
195	98-82-8	Cumene	0.00E+00	vapor	1.000	1.000	0.000	0.00E+00	0.00E+00	0.00E+00	0.00E+00	0.00E+00	0.00E+00	0.00E+00	0.00E+00	0.00E+00
196	98-83-9	alpha-Methylstyrene	0.00E+00	vapor	1.000	1.000	0.000	0.00E+00	0.00E+00	0.00E+00	0.00E+00	0.00E+00	0.00E+00	0.00E+00	0.00E+00	0.00E+00
197	98-86-2	Acetophenone	7.36E-09	vapor	1.000	1.000	0.000	7.36E-09	0.00E+00	7.36E-09	3.12E-09	7.81E-09	3.90E-09	0.00E+00	3.90E-09	3.90E-09
198	99-99-3	Nitrobenzene	4.94E-05	vapor	1.000	1.000	0.000	4.94E-05	0.00E+00	4.94E-05	3.47E-08	5.18E-05	2.59E-08	0.00E+00	2.59E-08	2.59E-08
199										3.29E-00						
200																
201																
202	Coplanar PCBs									LOPO6	LVPO1	LVPO3			LVP18	Composite LVP18
203										g/sec	g/sec	g/sec			g/sec	g/sec
204	31508-00-6	2,3,4,4',5-Pentachlorobiphenyl (PBC 118)								4.20E-14	1.05E-13	1.47E-13			7.34E-15	7.34E-15
205	32598-13-3	2,3',4,4',5-Tetrachlorobiphenyl (TCB)								4.20E-14	1.05E-13	1.47E-13			7.34E-15	7.34E-15
206	32598-14-4	2,3,3',4,4'-Pentachlorobiphenyl (PCB 105)								4.20E-14	1.05E-13	1.47E-13			7.34E-15	7.34E-15
207	32774-16-6	3,3',4,4',5,5'-Hexachlorobiphenyl								4.20E-14	1.05E-13	1.47E-13			7.34E-15	7.34E-15
208	35065-28-2	2,3',3',4,4',5,5'-Heptachlorobiphenyl								4.20E-14	1.05E-13	1.47E-13			7.34E-15	7.34E-15
209	35065-30-6	2,3',4,4',5,5',6-Heptachlorobiphenyl								4.20E-14	1.05E-13	1.47E-13			7.34E-15	7.34E-15
210	38380-08-4	2,2',3,4,4',5,5'-Heptachlorobiphenyl (PCB 157)								4.20E-14	1.05E-13	1.47E-13			7.34E-15	7.34E-15
211	38933-31-0	2,3,3',4,4',5,6-Heptachlorobiphenyl								4.20E-14	1.05E-13	1.47E-13			7.34E-15	7.34E-15
212	52663-72-6	2,3',4,4',5,5'-Hexachlorobiphenyl								4.20E-14	1.05E-13	1.47E-13			7.34E-15	7.34E-15
213	57465-28-8	2,3',4,4',5-Pentachlorobiphenyl								4.20E-14	1.05E-13	1.47E-13			7.34E-15	7.34E-15
214	65510-44-3	2',3,4,4',5-Pentachlorobiphenyl								4.20E-14	1.05E-13	1.47E-13			7.34E-15	7.34E-15
215	69782-90-7	2,3,3',4,4',5'-Hexachlorobiphenyl								4.20E-14	1.05E-13	1.47E-13			7.34E-15	7.34E-15
216	70362-50-4	3,3',4',5-Tetrachlorobiphenyl								4.20E-14	1.05E-13	1.47E-13			7.34E-15	7.34E-15
217	74472-37-0	2,3,4,4',5-Pentachlorobiphenyl								4.20E-14	1.05E-13	1.47E-13			7.34E-15	7.34E-15
218																
219	1336-36-3	Polychlorinated biphenyls (PCBs)								5.92E-11	Correction for Coplanar PCBs					
220	1336-36-3	UNCorrected (for coplanar PCBs)								5.89E-11	0.98 as percent					
221											0.01 as decimal form					

Table 6-8 HWPOB - Unabated HLW Melter

	CAS #	COPC	Feed Rate g/sec	In ACM	Group	Grouping	Phase	HWPOB rate g/sec	Performance Factor	Adjusted PF	Calc'd rate HWPOB g/sec	Corrected HWPOB g/sec
4	100-00-5	p-Nitrochlorobenzene	2.86E-03	No		10	vapor			3.04E-03	8.68E-06	8.68E-06
5	100-21-0	p-Phthalic acid	4.29E-02	Yes	1	1	vapor	2.29E-03	5.31E-02		2.29E-03	2.29E-03
6	100-41-4	Ethyl benzene	2.86E-03	No		20	vapor			8.47E-17	2.42E-19	0.00E+00
7	100-42-5	Styrene	2.86E-03	No		19	vapor			1.79E-13	5.10E-16	0.00E+00
8	10061-01-5	cis-1,3-Dichloropropene	2.86E-03	Yes	16	16	vapor	1.91E-16	5.29E-13		1.91E-16	1.91E-16
9	10061-02-6	trans-1,3-Dichloropropene	2.86E-03	No		17	vapor			2.37E-11	6.78E-14	6.78E-14
10	101-55-3	4-Bromophenyl phenyl ether	4.29E-02	No		14	vapor			9.51E-07	4.07E-08	4.07E-08
11	101-84-8	Diphenyl ether	7.14E-03	Yes	18	18	vapor	1.22E-12	1.71E-10		1.22E-12	1.22E-12
12	106-35-4	3-Heptanone	2.86E-03	No		14	vapor			9.51E-07	2.72E-09	2.72E-09
13	106-42-3	p-Xylene (Dimethyl benzene)	7.14E-03	No		19	vapor			1.79E-13	1.28E-15	1.28E-15
14	106-46-7	1,4-Dichlorobenzene	2.86E-03	No		18	vapor			1.71E-10	4.89E-13	4.89E-13
15	106-88-7	1,2-Epoxybutane	7.14E-03	No		15	vapor			9.73E-08	6.95E-10	6.95E-10
16	106-93-4	Ethylene dibromide (Dibromoethane)	2.86E-03	Yes	16	16	vapor	3.60E-12	1.26E-09		3.60E-12	3.60E-12
17	106-97-8	Butane	7.14E-03	Yes	28	28	vapor	0.00E+00	0.00E+00		0.00E+00	0.00E+00
18	106-99-0	1,3-Butadiene	2.86E-03	Yes	23	23	vapor	0.00E+00	0.00E+00		0.00E+00	0.00E+00
19	107-02-8	Acrolein	7.14E-03	No		14	vapor			9.51E-07	6.79E-09	6.79E-09
20	107-05-1	3-Chloropropene (Allyl chloride)	2.86E-03	No		20	vapor			8.47E-17	2.42E-19	0.00E+00
21	107-06-2	1,2-Dichloroethane (Ethylene chloride)	2.86E-03	No		17	vapor			2.37E-11	6.78E-14	6.78E-14
22	107-12-0	Propanenitrile	7.14E-03	No		13	vapor			3.89E-05	2.78E-07	2.78E-07
23	107-13-1	Acrylonitrile	1.43E-02	No		14	vapor			9.51E-07	1.36E-08	1.36E-08
24	107-19-7	2-Propyn-1-ol	4.29E-02	No		10	vapor			3.04E-03	1.30E-04	1.30E-04
25	107-31-3	Formic acid, methyl ester	4.29E-02	No		15	vapor			9.73E-08	4.17E-09	4.17E-09
26	107-66-4	Dibutyl phosphate	4.29E-02	No		5	particle bound			5.06E-02	2.17E-03	2.17E-03
27	107-87-9	2-Pentanone	1.43E-03	No		14	vapor			9.51E-07	1.36E-09	1.36E-09
28	108-03-2	1-Nitropropane	4.29E-02	No		14	vapor			9.51E-07	4.07E-08	4.07E-08
29	108-05-4	Vinyl acetate	4.29E-02	No		16	vapor			3.48E-09	1.50E-10	1.50E-10
30	108-10-1	Hexone (4-Methyl-2-pentanone or MIBK)	7.14E-03	No		14	vapor			9.51E-07	6.79E-09	6.79E-09
31	108-20-3	Bis(isopropyl)ether	7.14E-03	No		18	vapor			1.71E-10	1.22E-12	1.22E-12
32	108-38-3	m-Xylene (Dimethyl benzene)	7.14E-03	No		19	vapor			1.79E-13	1.28E-15	1.28E-15
33	108-39-4	m-Cresol	7.14E-03	No		9	vapor			1.36E-02	9.71E-05	9.71E-05
34	108-87-2	Methylcyclohexane	7.14E-03	Yes	25	25	vapor	0.00E+00	0.00E+00		0.00E+00	0.00E+00
35	108-88-3	Toluene	2.86E-03	Yes	19	19	vapor	4.33E-16	1.51E-15		4.33E-16	0.00E+00
36	108-90-7	Chlorobenzene	2.86E-03	No		19	vapor			1.79E-13	5.10E-16	0.00E+00
37	108-93-0	Cyclohexanol	7.14E-03	No		10	vapor			3.04E-03	2.17E-05	2.17E-05
38	108-94-1	Cyclohexanone	7.14E-03	No		11	vapor			1.00E-03	7.17E-06	7.17E-06
39	108-95-2	Phenol	4.29E-02	Yes	8	8	vapor	1.96E-03	4.56E-02		1.96E-03	1.96E-03
40	109-66-0	n-Pentane	7.14E-03	No		28	vapor			0.00E+00	0.00E+00	0.00E+00
41	109-99-9	Tetrahydrofuran	2.86E-03	No		13	vapor			3.89E-05	1.11E-07	1.11E-07
42	110-12-3	5-Methyl-2-hexanone	2.86E-03	No		15	vapor			9.73E-08	2.78E-10	2.78E-10
43	110-43-0	2-Heptanone	2.86E-03	No		15	vapor			9.73E-08	2.78E-10	2.78E-10
44	110-54-3	n-Hexane	7.14E-03	Yes	27	27	vapor	0.00E+00	0.00E+00		0.00E+00	0.00E+00
45	110-62-3	n-Valeraldehyde	4.29E-02	No		15	vapor			9.73E-08	4.17E-09	4.17E-09
46	110-82-7	Cyclohexane	7.14E-03	Yes	24	24	vapor	0.00E+00	0.00E+00		0.00E+00	0.00E+00
47	110-83-8	Cyclohexene	2.86E-03	No		22	vapor			2.25E-21	6.43E-24	0.00E+00
48	110-86-1	Pyridine	1.43E-02	No		11	vapor			1.00E-03	1.43E-05	1.43E-05
49	111-65-9	n-Octane	7.14E-03	No		28	vapor			0.00E+00	0.00E+00	0.00E+00
50	111-76-2	Ethylene glycol monobutyl ether	4.29E-02	No		9	vapor			1.36E-02	5.83E-04	5.83E-04
51	111-84-2	n-Nonane	7.14E-03	Yes	28	28	vapor	0.00E+00	0.00E+00		0.00E+00	0.00E+00
52	117-81-7	Bis(2-ethylhexyl)phthalate (DEHP)	4.29E-02	No		30	particle bound			2.80E-02	1.20E-03	1.20E-03
53	117-84-0	n-Dioctyl phthalate	4.29E-02	No		32	particle bound			1.41E-03	6.05E-05	6.05E-05
54	120-12-7	Anthracene	4.29E-02	Yes	13	13	particle bound	7.28E-07	1.66E-05		7.28E-07	7.28E-07
55	120-82-1	1,2,4-Trichlorobenzene	7.14E-03	Yes	17	17	vapor	1.89E-13	2.37E-11		1.89E-13	1.89E-13
56	120-83-2	2,4-Dichlorophenol	4.29E-02	No		10	vapor			3.04E-03	1.30E-04	1.30E-04
57	121-44-8	Triethylamine	7.14E-03	No		15	vapor			9.73E-08	6.95E-10	6.95E-10
58	121-69-7	Dimethylaniline	7.14E-03	No		13	vapor			3.89E-05	2.78E-07	2.78E-07
59	122-39-4	N,N-Diphenylamine	1.43E-02	Yes	10	10	vapor	6.68E-06	6.08E-03		6.68E-06	6.68E-06
60	123-19-3	4-Heptanone	2.86E-03	No		13	vapor			3.89E-05	1.11E-07	1.11E-07
61	123-38-6	n-Propionaldehyde	1.43E-03	No		14	vapor			9.51E-07	1.36E-09	1.36E-09
62	123-51-3	3-Methyl-1-butanol	7.14E-03	No		12	vapor			5.99E-04	4.28E-06	4.28E-06
63	123-86-4	Acetic acid n-butyl ester	1.36E-04	No		16	vapor			3.48E-09	4.73E-13	4.73E-13
64	123-91-1	1,4-Dioxane	1.43E-02	No		10	vapor			3.04E-03	4.34E-05	4.34E-05
65	126-73-8	Tributyl phosphate	2.86E-02	Yes	7	7	particle bound	1.51E-03	5.28E-02		1.51E-03	1.51E-03
66	126-98-7	2-Methyl-2-propenenitrile (Methacrylonitrile)	7.14E-03	No		16	vapor			3.48E-09	2.48E-11	2.48E-11
67	127-18-4	Perchloroethylene (tetrachloroethylene)	2.86E-03	Yes	21	21	vapor	1.19E-23	4.17E-21		1.19E-23	0.00E+00
68	127-19-5	N,N-Dimethylacetamide	7.14E-03	No		5	vapor			5.06E-02	3.61E-04	3.61E-04
69	128-37-0	2,6-Bis(tert-butyl)-4-methylphenol	1.43E-02	No		32	vapor			1.41E-03	2.02E-05	2.02E-05
70	129-00-0	Pyrene	4.29E-02	Yes	33	33	particle bound	3.49E-05	6.07E-04		3.49E-05	3.49E-05
71	1321-64-8	Pentachloronaphthalene	4.29E-02	Yes	14	14	particle bound	7.39E-12	1.72E-10		7.39E-12	7.39E-12
72	1321-65-9	Trichloronaphthalene	4.29E-02	No		15	particle bound			9.73E-08	4.17E-09	4.17E-09
73	132-64-9	Dibenzofuran	4.29E-02	Yes	16	16	particle bound	8.33E-09	1.94E-07		8.33E-09	8.33E-09
74	1335-87-1	Hexachloronaphthalene	4.29E-02	No		14	particle bound			9.51E-07	4.07E-08	4.07E-08
75	1335-88-2	Tetrachloronaphthalene	4.29E-02	No		15	particle bound			9.73E-08	4.17E-09	4.17E-09
76	1336-36-3	Polychlorinated biphenyls (PCBs)	1.74E-03	Yes	30	30	vapor	2.10E-10	1.21E-07		2.08E-10	2.08E-10
77	141-78-6	Acetic acid ethyl ester (Ethyl acetate)	1.36E-04	No		14	vapor			9.51E-07	1.29E-10	1.29E-10
78	141-79-7	4-Methyl-3-penten-2-one	4.29E-02	No		13	vapor			3.89E-05	1.66E-06	1.66E-06
79	142-82-5	n-Heptane	7.14E-03	No		27	vapor			0.00E+00	0.00E+00	0.00E+00
80	144-62-7	Oxalic acid	2.14E+00	Yes	3	3	vapor	1.89E-01	9.04E-02		1.89E-01	1.89E-01
81	156-60-5	trans-1,2-Dichloroethylene	7.14E-03	No		20	vapor			8.47E-17	6.05E-19	0.00E+00
82	1634-04-4	Methyl tert-butyl ether	7.14E-03	No		16	vapor			3.48E-09	2.48E-11	2.48E-11
83	189-55-9	Dibenzo(a,i)pyrene	4.29E-02	No		5	particle			5.06E-02	2.17E-03	2.17E-03
84	189-64-0	Dibenzo(a,h)pyrene	4.29E-02	No		5	particle			5.06E-02	2.17E-03	2.17E-03
85	191-24-2	Benzo(g,h,i)perylene	4.29E-02	No		30	particle bound			2.80E-02	1.20E-03	1.20E-03
86	191-30-0	Dibenzo(a,l)pyrene	4.29E-02	No		5	particle			5.06E-02	2.17E-03	2.17E-03
87	192-65-4	Dibenzo(a,e)pyrene	4.29E-02	No		5	particle			5.06E-02	2.17E-03	2.17E-03
88	193-39-5	Indeno(1,2,3-cd)pyrene	4.29E-02	Yes	30	30	particle	2.84E-10	6.62E-09		2.84E-10	2.84E-10
89	206-44-0	Fluoranthene	4.29E-02	Yes	33	33	particle bound	7.39E-12	1.72E-10		7.39E-12	7.39E-12
90	208-96-8	Acenaphthylene	4.29E-02	Yes	14	14	particle bound	8.15E-08	1.90E-06		8.13E-08	8.15E-08
91	2234-13-1	Octachloronaphthalene	1.36E-04	No		14	particle bound			9.51E-07	1.29E-10	1.29E-10
92	224-42-0	Dibenz(a,j)acridine	4.29E-02	No		4	particle bound			5.04E-02	2.16E-03	2.16E-03
93	226-36-8	Dibenz(a,h)acridine	4.29E-02	No		4	particle bound			5.04E-02	2.16E-03	2.16E-03
94	25551-13-7	Trimethyl benzene	7.14E-03	No		19	vapor			1.79E-13	1.28E-15	1.28E-15
95	26140-60-3	Terphenyls	4.29E-02	Yes	34	34	particle bound	7.39E-12	1.72E-10		7.39E-12	7.39E-12
96	27154-33-2	Trichlorofluoroethane	7.14E-03	No		26	vapor			0.00E+00	0.00E+00	0.00E+00
97	287-92-3	Cyclopentane	7.14E-03	No		24	vapor			0.00E+00	0.00E+00	0.00E+00
98	3697-24-3	5-Methylchrysene	4.29E-02	Yes	32	32	particle bound	7.40E-12	1.72E-10		7.40E-12	7.40E-12
99	3825-26-1	Ammonium perfluorooctanoate	4.29E-02	No		14	vapor			9.51E-07	4.07E-08	4.07E-08
100	4170-30-3	2-Butenaldehyde (2-Butenal or Crotonaldehyde)	7.14E-03	Yes	11	11	vapor	7.02E-06	9.83E-04		7.02E-06	7.02E-06
101	50-00-0	Formaldehyde	7.14E-03	No		6	vapor			4.10E-02	2.93E-04	2.93E-04
102	50-32-8	Benzo(a)pyrene	2.72E-02	Yes	30	30	particle bound	1.59E-03	5.86E-02		1.59E-03	1.59E-03
103	53-70-3	Dibenz(a,h)anthracene	2.72E-02	No		7	particle bound			5.29E-02	1.44E-03	1.44E-03
104	540-59-0	1,2-Dichloroethylene	7.14E-03	No		19	vapor			1.79E-13	1.28E-15	1.28E-15
105	540-84-1	2,2,4-Trimethylpentane	7.14E-03	No		28	vapor			0.00E+00	0.00E+00	0.00E+00
106	541-73-1	1,3-Dichlorobenzene	2.86E-03	No		19	vapor			1.79E-13	5.10E-16	0.00E+00
107	56-23-5	Carbon tetrachloride	2.86E-03	Yes	22	22	vapor	6.43E-24	2.25E-21		6.43E-24	0.00E+00
108	563-80-4	3-Methyl-2-butanone	7.14E-03	No		14	vapor			9.51E-07	6.79E-09	6.79E-09
109	56-49-5	3-Methylcholanthrene	4.29E-02	No		28	particle bound			0.00E+00	0.00E+00	0.00E+00
110	57-14-7	1,1-Dimethylhydrazine	4.29E-02	Yes	12	12	vapor	2.58E-05	5.86E-04		2.58E-05	2.58E-05
111	58-90-2	2,3,4,6-Tetrachlorophenol	4.29E-02	Yes	11	11	vapor	5.01E-05	1.17E-03		5.01E-05	5.01E-05
112	591-78-6	2-Hexanone	7.14E-03	No		14	vapor			9.51E-07	6.79E-09	6.79E-09
113	59-50-7	4-Chloro-3-methylphenol	4.29E-02	No		32	vapor			1.41E-03	6.05E-05	6.05E-05
114	59-89-2	N-Nitrosomorpholine	4.29E-02	Yes	6	6	vapor	7.41E-12	1.73E-10		7.41E-12	7.41E-12
115	602-87-9	5-Nitroacenaphthene	4.29E-02	No		8	particle bound			1.36E-02	5.83E-04	5.83E-04
116	60-29-7	Ethyl ether	4.29E-02	No		17	vapor			2.37E-11	1.01E-12	1.01E-12
117	603-34-9	Triphenylamine	4.29E-02	Yes	10	10	vapor	1.21E-04	2.83E-03		1.21E-04	1.21E-04
118	60-34-4	Methylhydrazine	7.14E-03	No		10	vapor			3.04E-03	2.17E-05	2.17E-05
119	60-35-5	Acetamide	7.14E-03	Yes	5	5	vapor	3.61E-04	5.06E-02		3.61E-04	3.61E-04
120	621-64-7	Di-n-Propylnitrosamine (N-Nitroso-di-n-propylamine)	4.29E-02	Yes	10	10	vapor	7.39E-12	1.72E-10		7.39E-12	7.39E-12
121	624-83-9	Methyl isocyanate	7.14E-03	No		17	vapor			2.37E-11	1.69E-13	1.69E-13
122	627-13-4	Nitric acid, propyl ester	3.57E-03	No		17	vapor			2.37E-11	8.46E-14	8.46E-14
123	62-75-9	N-Nitroso-N,N-dimethylamine (Dimethylnitrosamine)	4.29E-02	Yes	6	6	vapor	5.83E-04	1.36E-02		5.83E-04	5.83E-04
124	630-20-6	1,1,1,2-Tetrachloroethane	7.14E-03	No		18	vapor			1.71E-10	1.22E-12	1.22E-12
125	64-17-5	Ethyl alcohol	7.14E-03	No		10	vapor			3.04E-03	2.17E-05	2.17E-05
126	64-18-6	Formic acid	1.07E+01	No		7	vapor			5.29E-02	5.67E-01	5.67E-01
127	64-19-7	Acetic acid	1.56E+01	Yes	8	8	vapor	2.87E-08	1.72E-10		2.87E-08	2.87E-08
128	67-56-1	Methyl alcohol (Methanol)	7.14E-03	No		10	vapor			3.04E-03	2.17E-05	2.17E-05
129	67-63-0	2-Propyl alcohol (Isopropanol, Propan-2-ol)	1.43E-03	No		11	vapor			1.00E-03	1.43E-06	1.43E-06
130	67-64-1	2-Propanone (Acetone)	1.43E-02	No		13	vapor			3.89E-05	5.56E-07	5.56E-07
131	67-66-3	Chloroform	2.86E-03	No		19	vapor			1.79E-13	5.10E-16	0.00E+00
132	67-72-1	Hexachloroethane	4.29E-02	No		19	vapor			1.79E-13	7.66E-15	7.66E-15
133	684-16-2	Hexafluoroacetone	7.14E-03	No		19	vapor			1.79E-13	1.28E-15	1.28E-15
134	71-23-8	n-Propyl alcohol	2.86E-03	No		11	vapor			1.00E-03	2.87E-06	2.87E-06
135	71-36-3	n-Butyl alcohol	7.14E-03	No		11	vapor			1.00E-03	7.17E-06	7.17E-06
136	71-43-2	Benzene	2.86E-03	Yes	19	19	vapor	1.49E-17	5.20E-15		1.49E-17	0.00E+00
137	71-55-6	Methyl chloroform (1,1,1-Trichloroethane)	2.86E-03	No		21	vapor			4.17E-21	1.19E-23	0.00E+00
138	74-83-9	Bromomethane (Methyl bromide)	2.86E-03	No		19	vapor			1.79E-13	5.10E-16	0.00E+00
139	74-87-3	Chloromethane (Methyl chloride)	2.86E-03	No		20	vapor			8.47E-17	2.42E-19	0.00E+00
140	74-97-5	Bromochloromethane	7.14E-03	No		17	vapor			2.37E-11	1.69E-13	1.69E-13
141	74-89-5	Methylamine	4.29E-02	No		20	vapor			8.47E-17	3.63E-18	0.00E+00
142	75-00-3	Chloroethane	2.86E-03	No		20	vapor			8.47E-17	2.42E-19	0.00E+00
143	75-01-4	Vinyl chloride (1-Chloroethene)	2.86E-03	No		22	vapor			2.25E-21	6.43E-24	0.00E+00
144	75-05-8	Acetonitrile	7.14E-03	Yes	13	13	vapor	4.28E-07	6.01E-05		4.28E-07	4.28E-07
145	75-07-0	Acetaldehyde	4.29E-02	No		13	vapor			3.89E-05	1.66E-06	1.66E-06
146	75-09-2	Dichloromethane (Methylene chloride)	2.86E-03	No		19	vapor			1.79E-13	5.10E-16	0.00E+00
147	75-12-7	Formamide	4.29E-02	Yes	4	4	vapor	2.16E-03	5.04E-02		2.16E-03	2.16E-03
148	75-15-0	Carbon disulfide	7.14E-03	No		20	vapor			8.47E-17	6.05E-19	0.00E+00
149	75-21-8	Ethylene oxide (Oxirane)	1.43E-03	No		15	vapor			9.73E-08	1.39E-10	1.39E-10
150	75-27-4	Bromodichloromethane	7.14E-03	No		18	vapor			1.71E-10	1.22E-12	1.22E-12
151	75-34-3	1,1-Dichloroethane	2.86E-03	No		19	vapor			1.79E-13	5.10E-16	0.00E+00
152	75-35-4	1,1-Dichloroethene (Vinylidene chloride)	7.14E-03	No		22	vapor			2.25E-21	1.61E-23	0.00E+00
153	75-43-4	Dichlorofluoromethane	2.86E-03	No		20	vapor			8.47E-17	2.42E-19	0.00E+00
154	75-45-6	Chlorodifluoromethane	2.86E-03	No		22	vapor			2.25E-21	6.43E-24	0.00E+00
155	75-50-3	Trimethylamine	7.14E-03	No		14	vapor			9.51E-07	6.79E-09	6.79E-09
156	75-52-5	Nitromethane	4.29E-02	No		13	vapor			3.89E-05	1.66E-06	1.66E-06
157	75-55-8	2-Methylaziridine	4.29E-02	No		11	vapor			1.00E-03	4.30E-05	4.30E-05
158	75-61-6	Dibromodifluoromethane	7.14E-03	No		22	vapor			2.25E-21	1.61E-23	0.00E+00
159	75-63-8	Trifluorobromomethane	7.14E-03	No		26	vapor			0.00E+00	0.00E+00	0.00E+00
160	75-65-0	2-Methyl-2-propanol	7.14E-03	No		11	vapor			1.00E-03	7.17E-06	7.17E-06
161	75-69-4	Trichlorofluoromethane	7.14E-03	No		25	vapor			0.00E+00	0.00E+00	0.00E+00
162	75-71-8	Dichlorodifluoromethane	7.14E-03	No		25	vapor			0.00E+00	0.00E+00	0.00E+00
163	76-03-9	Trichloroacetic acid	7.14E-03	No		5	vapor			5.06E-02	3.61E-04	3.61E-04
164	76-11-9	1,1,1,2-Tetrachloro-2,2-difluoroethane	4.29E-02	No		24	vapor			0.00E+00	0.00E+00	0.00E+00
165	76-12-0	1,1,2,2-Tetrachloro-1,2-difluoroethane	4.29E-02	No		23	vapor			0.00E+00	0.00E+00	0.00E+00
166	76-13-1	1,2,2-Trichloro-1,1,2-trifluoroethane (Freon 113)	7.14E-03	No		25	vapor			0.00E+00	0.00E+00	0.00E+00
167	76-14-2	1,2-Dichloro-1,1,2,2-tetrafluoroethane	7.14E-03	No		28	vapor			0.00E+00	0.00E+00	0.00E+00
168	76-15-3	Chloropentafluoroethane	7.14E-03	Yes	28	28	vapor	0.00E+00	0.00E+00		0.00E+00	0.00E+00
169	78-83-1	2-Methylpropyl alcohol (Isobutyl alcohol)	4.29E-02	No		11	vapor			1.00E-03	4.30E-05	4.30E-05
170	78-87-5	1,2-Dichloropropane	2.86E-03	No		19	vapor			1.79E-13	5.10E-16	0.00E+00
171	78-92-2	1-Methylpropyl alcohol (2-Butanol)	2.86E-03	No		11	vapor			1.00E-03	2.87E-06	2.87E-06
172	78-93-3	Methyl ethyl ketone (MEK, 2-Butanone)	7.14E-03	No		13	vapor			3.89E-05	2.78E-07	2.78E-07
173	79-00-5	1,1,2-Trichloroethane	7.14E-03	No		17	vapor			2.37E-11	1.69E-13	1.69E-13
174	79-01-6	Trichloroethylene	7.14E-03	Yes	20	20	vapor	7.14E-19	8.89E-17		7.14E-19	0.00E+00
175	79-09-4	Propanoic acid	4.29E-02	No		6	vapor			4.10E-02	1.76E-03	1.76E-03
176	79-10-7	2-Propenoic acid	5.72E-03	No		6	vapor			4.10E-02	2.35E-04	2.35E-04
177	79-20-9	Methyl acetate	4.29E-02	No		14	vapor			9.51E-07	4.07E-08	4.07E-08
178	79-34-5	1,1,2,2-Tetrachloroethane	1.36E-05	No		16	vapor			3.48E-09	4.73E-14	4.73E-14
179	83-32-9	Acenaphthene	4.29E-02	Yes	15	15	vapor	7.34E-12	1.71E-10		7.34E-12	7.34E-12
180	84-66-2	Diethyl phthalate	4.29E-02	Yes	8	8	vapor	1.56E-03	3.66E-02		1.56E-03	1.56E-03
181	84-74-2	Dibutyl phthalate	4.29E-02	Yes	31	31	particle bound	6.92E-04	1.61E-02		6.92E-04	6.92E-04
182	85-01-8	Phenanthrene	4.29E-02	No		13	particle bound			3.89E-05	1.66E-06	1.66E-06
183	85-68-7	Butylbenzyl phthalate	4.29E-02	No		31	particle bound			1.61E-02	6.92E-04	6.92E-04
184	86-73-7	Fluorene	4.29E-02	No		14	vapor			9.51E-07	4.07E-08	4.07E-08
185	87-68-3	Hexachlorobutadiene	7.14E-03	Yes	20	20	vapor	4.86E-19	6.80E-17		4.86E-19	0.00E+00
186	88-06-2	2,4,6-Trichlorophenol	4.29E-02	No		10	vapor			3.04E-03	1.30E-04	1.30E-04
187	88-72-2	2-Nitrotoluene	7.14E-03	No		12	vapor			5.99E-04	4.28E-06	4.28E-06
188	88-75-5	2-Nitrophenol	4.29E-02	No		12	vapor			5.99E-04	2.56E-05	2.56E-05
189	88-89-1	Picric acid	4.29E-02	Yes	2	2	vapor	2.16E-03	5.06E-02		2.16E-03	2.16E-03
190	91-20-3	Naphthalene	1.43E-03	Yes	16	16	vapor	1.28E-11	9.04E-09		1.28E-11	1.28E-11
191	91-22-5	Quinoline	4.29E-02	No		9	vapor			1.36E-02	5.83E-04	5.83E-04
192	91-58-7	2-Chloronaphthalene	4.29E-02	No		16	vapor			3.48E-09	1.50E-10	1.50E-10
193	92-52-4	1,1'-Biphenyl	2.86E-02	No		16	vapor			3.48E-09	9.97E-11	9.97E-11
194	92-69-3	4-Phenylphenol	4.29E-02	No		10	particle bound			3.04E-03	1.30E-04	1.30E-04
195	95-13-6	Indene	4.29E-02	No		18	vapor			1.71E-10	7.33E-12	7.33E-12
196	95-47-6	o-Xylene	2.86E-03	No		19	vapor			1.79E-13	5.10E-16	0.00E+00
197	95-48-7	o-Cresol (2-Methylphenol)	7.14E-03	No		9	vapor			1.36E-02	9.71E-05	9.71E-05
198	95-49-8	2-Chlorotoluene	4.29E-02	No		19	vapor			1.79E-13	7.66E-15	7.66E-15
199	95-50-1	o-Dichlorobenzene (1,2-Dichlorobenzene)	2.86E-03	Yes	18	18	vapor	4.89E-13	1.71E-10		4.89E-13	4.89E-13
200	95-57-8	2-Chlorophenol	4.29E-02	No		11	vapor			1.00E-03	4.30E-05	4.30E-05
201	95-95-4	2,4,5-Trichlorophenol	4.29E-02	No		9	vapor			1.36E-02	5.83E-04	5.83E-04
202	96-22-0	3-Pentanone	1.43E-03	No		14	vapor			9.51E-07	1.36E-09	1.36E-09
203	96-69-5	Bis(3-tert-butyl-4-hydroxy-6-methylphenyl)sulfide	4.29E-02	No		19	vapor			1.79E-13	7.66E-15	7.66E-15
204	98-06-6	tert-Butylbenzene	4.29E-02	No		21	vapor			4.17E-21	1.79E-22	0.00E+00
205	98-82-8	Cumene	4.29E-02	No		20	vapor			8.47E-17	3.63E-18	0.00E+00
206	98-83-9	alpha-Methylstyrene	7.14E-03	No		19	vapor			1.79E-13	1.28E-15	1.28E-15
207	98-86-2	Acetophenone	2.86E-02	Yes	11	11	vapor	2.46E-05	8.58E-04		2.46E-05	2.46E-05
208	98-95-3	Nitrobenzene	2.86E-02	No		12	vapor			5.99E-04	1.71E-05	1.71E-05
209											7.10E-01	

Adjusted Performance Factors

Group	PF
1	5.31E-02
2	5.06E-02
3	9.04E-02
4	5.04E-02
5	5.06E-02
6	1.73E-10
7	5.29E-02
8	4.10E-02
9	1.36E-02
10	3.04E-03
11	1.00E-03
12	5.99E-04
13	3.89E-05
14	9.51E-07
15	9.73E-08
16	3.48E-09
17	2.37E-11
18	1.71E-10
19	1.79E-13
20	8.47E-17
21	4.17E-21
22	2.25E-21
23	0.00E+00
24	0.00E+00
25	0.00E+00
26	0.00E+00
27	0.00E+00
28	0.00E+00
29	0.00E+00
30	2.80E-02
31	1.61E-02
32	1.41E-03
33	4.94E-04
34	1.72E-10
35	1.21E-07

Coplanar PCBs

CAS #	Name	HWPOB g/sec	Corrected HWPOB g/sec
31508-00-6	2,3',4,4',5-Pentachlorobiphenyl (PCB 118)	1.50E-13	1.50E-13
32598-13-3	3,3',4,4'-Tetrachlorobiphenyl (TCB)	1.50E-13	1.50E-13
32598-14-4	2,3,3',4,4'-Pentachlorobiphenyl (PCB 105)	1.50E-13	1.50E-13
32774-16-6	3,3',4,4',5,5'-Hexachlorobiphenyl	1.50E-13	1.50E-13
35065-29-3	2,2',3,4,4',5,5'-Heptachlorobiphenyl	1.50E-13	1.50E-13
35065-30-6	2,2',3,3',4,4',5-Heptachlorobiphenyl	1.50E-13	1.50E-13
38380-08-4	2,3,3',4,4',5-Hexachlorobiphenyl (PCB 157)	1.50E-13	1.50E-13
39635-31-9	2,3,3',4,4',5,5'-Heptachlorobiphenyl	1.50E-13	1.50E-13
52663-72-6	2,3',4,4',5,5'-Hexachlorobiphenyl	1.50E-13	1.50E-13
57465-28-8	3,3',4,4',5-Pentachlorobiphenyl	1.50E-13	1.50E-13
65510-44-3	2',3,4,4',5-Pentachlorobiphenyl	1.50E-13	1.50E-13
69782-90-7	2,3,3',4,4',5'-Hexachlorobiphenyl	1.50E-13	1.50E-13
70362-50-4	3,4,4',5-Tetrachlorobiphenyl	1.50E-13	1.50E-13
74472-37-0	2,3,4,4',5-Pentachlorobiphenyl	1.50E-13	1.50E-13
1336-36-3	Polychlorinated biphenyls (PCBs)	2.08E-10	
1336-36-3	UnCorrected (for coplanar PCBs)	2.10E-10	

Correction for Coplanar PCBs
0.99 as parent
0.01 as coplanar sum

Table 6-10 HOP10 - HLW Vessel Ventilation

	CAS #	COPC	Feed Rate g/sec	in ACM	Group	Grouping	Phase	HOP10 rate g/sec	Performance Factor	Adjusted PF	Calc'd rate HOP10 g/sec	Corrected HOP10 g/sec
4	100-00-5	p-Nitrochlorobenzene	2.86E-02	No		10	vapor			1.04E-04	2.97E-08	2.97E-08
5	100-21-0	p-Phthalic acid	4.29E-02	Yes	1	1	vapor	8.87E-12	2.07E-10		8.87E-12	8.87E-12
6	100-41-4	Ethyl benzene	2.86E-03	No		20	vapor			2.02E-13	5.78E-16	0.00E+00
7	100-42-5	Styrene	2.86E-03	No		19	vapor			3.64E-11	1.04E-13	1.04E-13
8	10061-01-5	cis-1,3-Dichloropropene	2.86E-03	Yes	18	18	vapor	2.97E-13	1.04E-10		2.97E-13	2.97E-13
9	10061-02-6	trans-1,3-Dichloropropene	2.86E-03	No		17	vapor			1.43E-09	4.10E-12	4.10E-12
10	101-55-3	4-Bromophenyl phenyl ether	4.29E-02	No		14	vapor			1.37E-08	5.88E-08	5.88E-08
11	101-84-8	Diphenyl ether	7.14E-03	Yes	18	18	vapor	3.90E-11	5.53E-08		3.90E-11	3.90E-11
12	106-35-4	3-Heptanone	2.86E-03	No		14	vapor			1.37E-08	3.91E-08	3.91E-08
13	106-42-3	p-Xylene (Dimethyl benzene)	7.14E-03	No		18	vapor			3.64E-11	2.60E-13	2.60E-13
14	106-46-7	1,4-Dichlorobenzene	2.86E-03	No		18	vapor			5.51E-08	1.58E-11	1.58E-11
15	106-88-7	1,2-Epoxybutane	7.14E-03	No		15	vapor			3.12E-07	2.23E-08	2.23E-08
16	106-93-4	Ethylene dibromide (Dibromoethane)	2.86E-03	Yes	18	18	vapor	6.09E-11	2.13E-08		6.09E-11	6.09E-11
17	106-97-8	Butane	7.14E-03	Yes	28	28	vapor	0.00E+00	0.00E+00		0.00E+00	0.00E+00
18	106-99-0	1,3-Butadiene	2.86E-03	Yes	23	23	vapor	0.00E+00	0.00E+00		0.00E+00	0.00E+00
19	107-02-8	Acrolein	7.14E-03	No		14	vapor			1.37E-08	9.78E-09	9.78E-09
20	107-05-1	3-Chloropropene (Allyl chloride)	2.86E-03	No		20	vapor			2.02E-13	5.78E-16	0.00E+00
21	107-06-2	1,2-Dichloroethane (Ethylene chloride)	2.86E-03	No		17	vapor			1.43E-09	4.10E-12	4.10E-12
22	107-12-0	Propionitrile	7.14E-03	No		13	vapor			1.65E-05	1.18E-07	1.18E-07
23	107-13-1	Acrylonitrile	1.43E-03	No		14	vapor			1.37E-08	1.96E-08	1.96E-08
24	107-18-6	2-Propen-1-ol	4.29E-02	No		10	vapor			1.04E-04	4.46E-08	4.46E-08
25	107-31-3	Formic acid, methyl ester	4.29E-02	No		15	vapor			3.12E-07	1.34E-08	1.34E-08
26	107-66-4	Dibutylphosphate	4.29E-02	No		6	particle bound			5.67E-06	2.43E-07	2.43E-07
27	107-87-9	2-Pentanone	1.43E-02	No		14	vapor			1.37E-08	1.96E-08	1.96E-08
28	108-03-2	1-Nitropropane	4.29E-02	No		14	vapor			1.37E-08	5.88E-08	5.88E-08
29	108-05-4	Vinyl acetate	4.29E-02	No		16	vapor			3.56E-08	1.53E-09	1.53E-09
30	108-10-1	Hexone (4-Methyl-2-pentanone or MIBK)	7.14E-03	No		14	vapor			1.37E-08	9.78E-09	9.78E-09
31	108-20-3	Bis(isopropyl)ether	7.14E-03	No		18	vapor			5.51E-08	3.94E-11	3.94E-11
32	108-38-3	m-Xylene (Dimethyl benzene)	7.14E-03	No		19	vapor			3.64E-11	2.60E-13	2.60E-13
33	108-39-4	m-Cresol	7.14E-03	No		8	vapor			2.49E-04	1.78E-06	1.78E-06
34	108-87-2	Methylcyclohexane	7.14E-03	Yes	25	25	vapor	0.00E+00	0.00E+00		0.00E+00	0.00E+00
35	108-88-3	Toluene	2.86E-03	Yes	19	19	vapor	4.68E-15	1.63E-12		4.68E-15	4.68E-15
36	108-90-7	Chlorobenzene	2.86E-03	No		18	vapor			3.64E-11	1.04E-13	1.04E-13
37	108-93-0	Cyclohexanol	7.14E-03	No		10	vapor			1.04E-04	7.44E-07	7.44E-07
38	108-94-1	Cyclohexanone	7.14E-03	No		11	vapor			9.83E-05	7.02E-07	7.02E-07
39	108-95-2	Phenol	4.29E-02	Yes	8	8	vapor	6.53E-08	1.52E-04		6.53E-08	6.53E-08
40	109-66-0	n-Pentane	7.14E-03	No		28	vapor			0.00E+00	0.00E+00	0.00E+00
41	109-99-9	Tetrahydrofuran	2.86E-03	No		13	vapor			1.65E-05	4.73E-08	4.73E-08
42	110-12-3	5-Methyl-2-hexanone	2.86E-03	No		15	vapor			3.12E-07	8.92E-10	8.92E-10
43	110-43-0	2-Heptanone	2.86E-03	No		15	vapor			3.12E-07	8.92E-10	8.92E-10
44	110-54-3	n-Hexane	7.14E-03	Yes	27	27	vapor	0.00E+00	0.00E+00		0.00E+00	0.00E+00
45	110-62-3	n-Valeraldehyde	4.29E-02	No		15	vapor			3.12E-07	1.34E-08	1.34E-08
46	110-82-7	Cyclohexane	7.14E-03	Yes	24	24	vapor	0.00E+00	0.00E+00		0.00E+00	0.00E+00
47	110-83-8	Cyclohexene	2.86E-03	No		22	vapor			1.98E-18	5.66E-21	0.00E+00
48	110-86-1	Pyridine	1.43E-02	No		11	vapor			9.83E-05	1.40E-06	1.40E-06
49	111-65-9	n-Octane	7.14E-03	No		26	vapor			0.00E+00	0.00E+00	0.00E+00
50	111-76-2	Ethylene glycol monobutyl ether	4.29E-02	No		9	vapor			2.49E-04	1.07E-05	1.07E-05
51	111-84-2	n-Nonane	7.14E-03	Yes	28	28	vapor	0.00E+00	0.00E+00		0.00E+00	0.00E+00
52	117-81-7	Bis(2-ethylhexyl)phthalate (DEHP)	4.29E-02	No		30	particle bound			1.34E-04	5.77E-06	5.77E-06
53	117-84-0	n-Dioctyl phthalate	4.29E-02	No		32	particle bound			7.77E-05	3.33E-06	3.33E-06
54	120-12-7	Anthracene	4.29E-02	Yes	13	13	particle bound	4.97E-07	1.07E-05		4.97E-07	4.97E-07
55	120-82-1	1,2,4-Trichlorobenzene	7.14E-03	Yes	17	17	vapor	1.02E-11	1.43E-09		1.02E-11	1.02E-11
56	120-83-2	2,4-Dichlorophenol	4.29E-02	No		10	vapor			1.04E-04	4.46E-06	4.46E-06
57	121-44-8	Triethylamine	7.14E-03	No		15	vapor			3.12E-07	2.23E-09	2.23E-09
58	121-69-7	Dimethylaniline	7.14E-03	No		13	vapor			1.65E-05	1.18E-07	1.18E-07
59	122-39-4	N,N-Diphenylamine	1.43E-02	Yes	10	10	vapor	2.97E-08	2.08E-04		2.97E-08	2.97E-08
60	123-19-3	4-Heptanone	2.86E-03	No		13	vapor			1.65E-05	4.73E-08	4.73E-08
61	123-38-6	n-Propionaldehyde	1.43E-02	No		14	vapor			1.37E-08	1.96E-08	1.96E-08
62	123-51-3	3-Methyl-1-butanol	7.14E-03	No		12	vapor			7.66E-05	5.47E-07	5.47E-07
63	123-86-4	Acetic acid n-butyl ester	1.36E-04	No		16	vapor			3.56E-08	4.82E-12	4.82E-12
64	123-91-1	1,4-Dioxane	1.43E-03	No		10	vapor			1.04E-04	1.48E-07	1.48E-07
65	126-73-8	Tributyl phosphate	2.86E-02	Yes	7	7	particle bound	2.28E-06	7.97E-05		2.28E-06	2.28E-06
66	126-98-7	2-Methyl-2-propenenitrile (Methacrylonitrile)	7.14E-03	No		16	vapor			3.56E-08	2.56E-10	2.56E-10
67	127-18-4	Perchloroethylene (tetrachloroethylene)	2.86E-03	Yes	21	21	vapor	3.53E-19	1.23E-16		3.53E-19	0.00E+00
68	127-19-5	N,N-Dimethylacetamide	7.14E-03	No		6	vapor			5.67E-06	4.05E-08	4.05E-08
69	128-37-0	2,6-Bis(tert-butyl)-4-methylphenol	1.43E-02	No		32	vapor			7.77E-05	1.11E-06	1.11E-06
70	129-00-0	Pyrene	4.29E-02	Yes	33	33	particle bound	4.29E-06	9.94E-05		4.29E-06	4.29E-06
71	1321-64-8	Pentachloronaphthalene	4.29E-02	Yes	14	14	particle bound	2.37E-10	5.53E-09		2.37E-10	2.37E-10
72	1321-65-9	Trichloronaphthalene	4.29E-02	No		15	particle bound			3.12E-07	1.34E-08	1.34E-08
73	132-64-9	Dibenzofuran	4.29E-02	Yes	15	15	particle bound	2.66E-08	6.19E-07		2.66E-08	2.66E-08
74	1335-87-1	Hexachloronaphthalene	4.29E-02	No		14	particle bound			1.37E-08	5.88E-08	5.88E-08
75	1335-88-2	Tetrachloronaphthalene	4.29E-02	No		15	particle bound			3.12E-07	1.34E-08	1.34E-08
76	1336-36-3	Polychlorinated biphenyls (PCBs)	1.74E-03	Yes	36	36	vapor	1.70E-08	9.81E-07		1.69E-08	1.69E-08
77	141-78-6	Acetic acid ethyl ester (Ethyl acetate)	1.36E-04	No		14	vapor			1.37E-08	1.86E-10	1.86E-10
78	141-79-7	4-Methyl-3-penten-2-one	4.29E-02	No		13	vapor			1.65E-05	7.08E-07	7.08E-07
79	142-82-5	n-Heptane	7.14E-03	No		27	vapor			0.00E+00	0.00E+00	0.00E+00
80	144-62-7	Oxalic acid	2.14E+00	Yes	3	3	vapor	1.56E-07	7.25E-08		1.56E-07	1.56E-07
81	156-60-5	trans-1,2-Dichloroethylene	7.14E-03	No		20	vapor			2.02E-13	1.44E-15	1.44E-15
82	1634-04-4	Methyl tert-butyl ether	7.14E-03	No		16	vapor			3.56E-08	2.55E-10	2.55E-10
83	189-55-9	Dibenzo[a,i]pyrene	4.29E-02	No		5	particle			5.67E-06	2.43E-07	2.43E-07
84	189-64-0	Dibenzo[a,h]pyrene	4.29E-02	No		5	particle			5.67E-06	2.43E-07	2.43E-07
85	191-24-2	Benzo[g,h,i]perylene	4.29E-02	No		30	particle bound			1.34E-04	5.77E-06	5.77E-06
86	191-30-0	Dibenzo[a,l]pyrene	4.29E-02	No		5	particle			5.67E-06	2.43E-07	2.43E-07
87	192-65-4	Dibenzo[a,e]pyrene	4.29E-02	No		6	particle			5.67E-06	2.43E-07	2.43E-07
88	193-39-5	Indeno(1,2,3-cd)pyrene	4.29E-02	Yes	30	30	particle	9.15E-09	2.13E-07		9.15E-09	9.15E-09
89	206-44-0	Fluoranthene	4.29E-02	Yes	33	33	particle bound	2.38E-10	5.55E-09		2.38E-10	2.38E-10
90	208-96-8	Acenaphthylene	4.29E-02	Yes	14	14	vapor	1.17E-07	2.73E-06		1.17E-07	1.17E-07
91	2234-13-1	Octachloronaphthalene	1.36E-04	No		14	particle bound			1.37E-08	1.86E-10	1.86E-10
92	224-42-0	Dibenz[a,j]acridine	4.29E-02	No		4	particle bound			7.04E-07	3.02E-08	3.02E-08
93	226-36-8	Dibenz[a,h]acridine	4.29E-02	No		4	particle bound			7.04E-07	3.02E-08	3.02E-08
94	25551-13-7	Trimethyl benzene	7.14E-03	No		19	vapor			3.64E-11	2.60E-13	2.60E-13
95	26140-60-3	Terphenyls	4.29E-02	Yes	34	34	particle bound	2.38E-10	5.56E-09		2.38E-10	2.38E-10
96	27154-33-2	Trichlorofluoroethane	7.14E-03	No		23	vapor			0.00E+00	0.00E+00	0.00E+00
97	287-92-3	Cyclopentane	7.14E-03	No		24	vapor			0.00E+00	0.00E+00	0.00E+00
98	3697-24-3	5-Methylchrysene	4.29E-02	Yes	32	32	particle bound	2.38E-10	5.56E-09		2.38E-10	2.38E-10
99	3825-26-1	Ammonium perfluorooctanoate	4.29E-02	No		14	vapor			1.37E-08	5.88E-08	5.88E-08
100	4170-30-3	2-Butenaldehyde (2-Butenal or Crotonaldehyde)	7.14E-03	Yes	11	11	vapor	6.97E-07	9.76E-05		6.97E-07	6.97E-07
101	50-00-0	Formaldehyde	7.14E-03	No		6	vapor			1.88E-04	1.34E-06	1.34E-06
102	50-32-8	Benzo(a)pyrene	2.72E-02	Yes	30	30	particle bound	7.30E-06	2.68E-04		7.30E-06	7.30E-06
103	53-70-3	Dibenz[a,h]anthracene	2.72E-02	No		7	particle bound			7.97E-05	2.16E-06	2.16E-06
104	540-59-0	1,2-Dichloroethylene	7.14E-03	No		19	vapor			3.64E-11	2.60E-13	2.60E-13
105	540-84-1	2,2,4-Trimethylpentane	7.14E-03	No		26	vapor			0.00E+00	0.00E+00	0.00E+00
106	541-73-1	1,3-Dichlorobenzene	2.86E-03	No		19	vapor			3.64E-11	1.04E-13	1.04E-13
107	56-23-5	Carbon tetrachloride	2.86E-03	Yes	22	22	vapor	5.66E-21	1.98E-18		5.66E-21	0.00E+00
108	563-80-4	3-Methyl-2-butanone	7.14E-03	No		14	vapor			1.37E-08	9.78E-09	9.78E-09
109	56-49-5	3-Methylcholanthrene	4.29E-02	No		28	particle bound			0.00E+00	0.00E+00	0.00E+00
110	57-14-7	1,1-Dimethylhydrazine	4.29E-02	Yes	12	12	vapor	3.28E-08	7.66E-05		3.28E-08	3.28E-08
111	58-90-2	2,3,4,6-Tetrachlorophenol	4.29E-02	Yes	11	11	vapor	4.53E-08	1.06E-04		4.53E-08	4.53E-08
112	591-78-6	2-Hexanone	7.14E-03	No		14	vapor			1.37E-08	9.78E-09	9.78E-09
113	59-50-7	4-Chloro-3-methylphenol	4.29E-02	No		32	vapor			7.77E-05	3.33E-06	3.33E-06
114	59-89-2	N-Nitrosomorpholine	4.29E-02	Yes	6	6	vapor	2.39E-10	5.57E-09		2.39E-10	2.39E-10
115	602-87-9	5-Nitroacenaphthene	4.29E-02	No		9	particle bound			2.49E-04	1.07E-05	1.07E-05
116	60-29-7	Ethyl ether	4.29E-02	No		17	vapor			1.43E-09	6.14E-11	6.14E-11
117	603-34-9	Triphenylamine	4.29E-02	Yes	32	32	vapor	6.69E-08	1.56E-04		6.69E-08	6.69E-08
118	60-34-4	Methylhydrazine	7.14E-03	No		10	vapor			1.04E-04	7.44E-07	7.44E-07
119	60-35-5	Acetamide	7.14E-03	Yes	5	5	vapor	4.05E-08	5.67E-06		4.05E-08	4.05E-08
120	621-64-7	Di-n-Propylnitrosamine (N-Nitroso-di-n-propylamine)	4.29E-02	Yes	10	10	vapor	2.39E-10	5.58E-09		2.39E-10	2.39E-10
121	624-83-9	Methyl isocyanate	7.14E-03	No		17	vapor			1.43E-09	1.02E-11	1.02E-11
122	627-13-4	Nitric acid, propyl ester	3.57E-03	No		17	vapor			1.43E-09	5.12E-12	5.12E-12
123	62-75-9	N-Nitroso-N,N-dimethylamine (Dimethylnitrosamine)	4.29E-02	Yes	8	8	vapor	1.07E-08	2.49E-04		1.07E-08	1.07E-08
124	630-20-6	1,1,1,2-Tetrachloroethane	7.14E-03	No		18	vapor			5.51E-08	3.94E-11	3.94E-11
125	64-17-5	Ethyl alcohol	7.14E-03	No		10	vapor			1.04E-04	7.44E-07	7.44E-07
126	64-18-6	Formic acid	1.07E+01	No		7	vapor			7.97E-05	8.54E-04	8.54E-04
127	64-19-7	Acetic acid	1.86E+01	Yes	4	4	vapor	8.62E-08	5.96E-08		8.62E-08	8.62E-08
128	67-56-1	Methyl alcohol (Methanol)	7.14E-03	No		10	vapor			1.04E-04	7.44E-07	7.44E-07
129	67-63-0	2-Propyl alcohol (Isopropanol, Propan-2-ol)	1.43E-03	No		11	vapor			9.83E-05	1.40E-07	1.40E-07
130	67-64-1	2-Propanone (Acetone)	1.43E-02	No		13	vapor			1.65E-05	2.36E-07	2.36E-07
131	67-66-3	Chloroform	2.86E-03	No		19	vapor			3.64E-11	1.04E-13	1.04E-13
132	67-72-1	Hexachloroethane	4.29E-02	No		19	vapor			3.64E-11	1.56E-12	1.56E-12
133	684-16-2	Hexafluoroacetone	7.14E-03	No		19	vapor			3.64E-11	2.60E-13	2.60E-13
134	71-23-8	n-Propyl alcohol	2.86E-03	No		11	vapor			9.83E-05	2.81E-07	2.81E-07
135	71-36-3	n-Butyl alcohol	7.14E-03	No		11	vapor			9.83E-05	7.02E-07	7.02E-07
136	71-43-2	Benzene	2.86E-03	Yes	18	18	vapor	1.13E-14	3.95E-12		1.13E-14	1.13E-14
137	71-55-6	Methyl chloroform (1,1,1-Trichloroethane)	2.86E-03	No		21	vapor			1.23E-16	3.53E-19	0.00E+00
138	74-83-9	Bromomethane (Methyl bromide)	2.86E-03	No		19	vapor			3.64E-11	1.04E-13	1.04E-13
139	74-87-3	Chloromethane (Methyl chloride)	2.86E-03	No		20	vapor			2.02E-13	5.78E-16	0.00E+00
140	74-97-5	Bromochloromethane	7.14E-03	No		17	vapor			1.43E-09	1.02E-11	1.02E-11
141	74-99-7	Methylacetylene	4.29E-02	No		20	vapor			2.02E-13	8.64E-15	8.64E-15
142	75-00-3	Chloroethane	2.86E-03	No		20	vapor			2.02E-13	5.78E-16	0.00E+00
143	75-01-4	Vinyl chloride (1-Chloroethene)	2.86E-03	No		22	vapor			1.98E-18	5.66E-21	0.00E+00
144	75-05-8	Acetonitrile	7.14E-03	Yes	13	13	vapor	1.60E-07	2.24E-05		1.60E-07	1.60E-07
145	75-07-0	Acetaldehyde	4.29E-02	No		13	vapor			1.65E-05	7.08E-07	7.08E-07
146	75-09-2	Dichloromethane (Methylene chloride)	2.86E-03	No		19	vapor			3.64E-11	1.04E-13	1.04E-13
147	75-12-7	Formamide	4.29E-02	Yes	4	4	vapor	3.02E-08	7.04E-07		3.02E-08	3.02E-08
148	75-15-0	Carbon disulfide	7.14E-03	No		20	vapor			2.02E-13	1.44E-15	1.44E-15
149	75-21-8	Ethylene oxide (Oxirane)	1.43E-03	No		15	vapor			3.12E-07	4.46E-10	4.46E-10
150	75-27-4	Bromodichloromethane	7.14E-03	No		18	vapor			5.51E-08	3.94E-11	3.94E-11
151	75-34-3	1,1-Dichloroethane	2.86E-03	No		19	vapor			3.64E-11	1.04E-13	1.04E-13
152	75-35-4	1,1-Dichloroethylene (Vinylidene chloride)	7.14E-03	No		22	vapor			1.98E-18	1.42E-20	0.00E+00
153	75-43-4	Dichlorofluoromethane	2.86E-03	No		20	vapor			2.02E-13	5.78E-16	0.00E+00
154	75-45-6	Chlorodifluoromethane	2.86E-03	No		22	vapor			1.98E-18	5.66E-21	0.00E+00
155	75-50-3	Trimethylamine	7.14E-03	No		14	vapor			1.37E-08	9.78E-09	9.78E-09
156	75-52-5	Nitromethane	4.29E-02	No		13	vapor			1.65E-05	7.08E-07	7.08E-07
157	75-56-9	2-Methyloxirane	4.29E-02	No		11	vapor			9.83E-05	4.21E-06	4.21E-06
158	75-61-6	Difluorodibromomethane	7.14E-03	No		22	vapor			1.98E-18	1.42E-20	0.00E+00
159	75-63-8	Trifluorobromomethane	7.14E-03	No		25	vapor			0.00E+00	0.00E+00	0.00E+00
160	75-65-0	2-Methyl-2-propanol	7.14E-03	No		11	vapor			9.83E-05	7.02E-07	7.02E-07
161	75-69-4	Trichlorofluoromethane	7.14E-03	No		23	vapor			0.00E+00	0.00E+00	0.00E+00
162	75-71-8	Dichlorodifluoromethane	7.14E-03	No		25	vapor			0.00E+00	0.00E+00	0.00E+00
163	76-03-9	Trichloroacetic acid	7.14E-03	No		5	vapor			5.67E-06	4.05E-08	4.05E-08
164	76-11-9	1,1,1,2-Tetrachloro-2,2-difluoroethane	4.29E-02	No		24	vapor			0.00E+00	0.00E+00	0.00E+00
165	76-12-0	1,1,2,2-Tetrachloro-1,2-difluoroethane	4.29E-02	No		23	vapor			0.00E+00	0.00E+00	0.00E+00
166	76-13-1	1,2,2-Trichloro-1,1,2-trifluoroethane (Freon 113)	7.14E-03	No		25	vapor			0.00E+00	0.00E+00	0.00E+00
167	76-14-2	1,2-Dichloro-1,1,2,2-tetrafluoroethane	7.14E-03	No		28	vapor			0.00E+00	0.00E+00	0.00E+00
168	76-15-3	Chloropentafluoroethane	7.14E-03	Yes	29	29	vapor	0.00E+00	0.00E+00		0.00E+00	0.00E+00
169	78-83-1	2-Methylpropyl alcohol (Isobutyl alcohol)	4.29E-02	No		11	vapor			9.83E-05	4.21E-06	4.21E-06
170	78-87-5	1,2-Dichloropropane	2.86E-03	No		19	vapor			3.64E-11	1.04E-13	1.04E-13
171	78-92-2	1-Methylpropyl alcohol (2-Butanol)	2.86E-03	No		11	vapor			9.83E-05	2.81E-07	2.81E-07
172	78-93-3	Methyl ethyl ketone (MEK, 2-Butanone)	7.14E-03	No		13	vapor			1.65E-05	1.18E-07	1.18E-07
173	79-00-5	1,1,2-Trichloroethane	7.14E-03	No		17	vapor			1.43E-09	1.02E-11	1.02E-11
174	79-01-6	Trichloroethylene	7.14E-03	Yes	20	20	vapor	1.60E-15	2.26E-13		1.60E-15	1.60E-15
175	79-09-4	Propanoic acid	4.29E-02	No		8	vapor			1.88E-04	8.06E-06	8.06E-06
176	79-10-7	2-Propenoic acid	5.72E-02	No		8	vapor			1.88E-04	1.08E-05	1.08E-05
177	79-20-9	Methyl acetate	4.29E-02	No		14	vapor			1.37E-08	5.88E-08	5.88E-08
178	79-34-5	1,1,2,2-Tetrachloroethane	1.36E-04	No		16	vapor			3.56E-08	4.82E-13	4.82E-13
179	83-32-9	Acenaphthene	4.29E-02	Yes	15	15	vapor	2.37E-10	5.52E-09		2.37E-10	2.37E-10
180	84-66-2	Diethyl phthalate	4.29E-02	Yes	8	8	vapor	9.58E-08	2.24E-04		9.58E-08	9.58E-08
181	84-74-2	Dibutyl phthalate	4.29E-02	Yes	31	31	particle bound	1.26E-08	2.94E-04		1.26E-08	1.26E-08
182	85-01-8	Phenanthrene	4.29E-02	No		13	particle bound			1.65E-05	7.08E-07	7.08E-07
183	85-68-7	Butylbenzyl phthalate	4.29E-02	No		31	particle bound			2.94E-04	1.26E-05	1.26E-05
184	86-73-7	Fluorene	4.29E-02	No		14	vapor			1.37E-08	5.88E-08	5.88E-08
185	87-68-3	Hexachlorobutadiene	7.14E-03	Yes	20	20	vapor	1.25E-15	1.75E-13		1.25E-15	1.25E-15
186	88-06-2	2,4,6-Trichlorophenol	4.29E-02	No		10	vapor			1.04E-04	4.46E-06	4.46E-06
187	88-72-2	2-Nitrotoluene	7.14E-03	No		12	vapor			7.66E-05	5.47E-07	5.47E-07
188	88-75-5	2-Nitrophenol	4.29E-02	No		12	vapor			7.66E-05	3.28E-06	3.28E-06
189	88-89-1	Picric acid	4.29E-02	Yes	2	2	vapor	3.88E-10	8.60E-08		3.88E-10	3.88E-10
190	91-20-3	Naphthalene	1.43E-03	Yes	18	18	vapor	1.14E-10	8.01E-08		1.14E-10	1.14E-10
191	91-22-5	Quinoline	4.29E-02	No		9	vapor			2.49E-04	1.07E-05	1.07E-05
192	91-58-7	2-Chloronaphthalene	4.29E-02	No		16	vapor			3.56E-08	1.53E-09	1.53E-09
193	92-52-4	1,1'-Biphenyl	2.86E-02	No		16	vapor			3.56E-08	1.02E-09	1.02E-09
194	92-93-3	4-Nitrobiphenyl	4.29E-02	No		10	particle bound			1.04E-04	4.46E-06	4.46E-06
195	95-13-6	Indene	4.29E-02	No		18	vapor			5.51E-08	2.36E-10	2.36E-10
196	95-47-6	o-Xylene	2.86E-03	No		19	vapor			3.64E-11	1.04E-13	1.04E-13
197	95-48-7	o-Cresol (2-Methylphenol)	7.14E-03	No		8	vapor			2.49E-04	1.78E-06	1.78E-06
198	95-49-8	2-Chlorotoluene	4.29E-02	No		19	vapor			3.64E-11	1.56E-12	1.56E-12
199	95-50-1	o-Dichlorobenzene (1,2-Dichlorobenzene)	2.86E-03	Yes	18	18	vapor	1.56E-11	5.51E-08		1.56E-11	1.56E-11
200	95-57-8	2-Chlorophenol	4.29E-02	No		11	vapor			9.83E-05	4.21E-06	4.21E-06
201	95-95-4	2,4,5-Trichlorophenol	4.29E-02	No		9	vapor			2.49E-04	1.07E-05	1.07E-05
202	96-22-0	3-Pentanone	1.43E-02	No		14	vapor			1.37E-08	1.96E-08	1.96E-08
203	96-69-5	Bis(3-tert-butyl-4-hydroxy-6-methyl-phenyl)sulfide	4.29E-02	No		19	vapor			3.64E-11	1.56E-12	1.56E-12
204	98-51-1	p-tert-Butyltoluene	4.29E-02	No		21	vapor			1.23E-16	5.28E-18	0.00E+00
205	98-82-8	Cumene	4.29E-02	No		20	vapor			2.02E-13	8.66E-15	8.66E-15
206	98-83-9	alpha-Methylstyrene	7.14E-03	No		19	vapor			3.64E-11	2.60E-13	2.60E-13
207	98-86-2	Acetophenone	2.86E-02	Yes	11	11	vapor	2.61E-08	9.15E-08		2.61E-08	2.61E-08
208	98-95-3	Nitrobenzene	2.86E-02	No		12	vapor			7.66E-05	2.19E-06	2.19E-06
209											1.09E-03	

Adjusted Performance Factors

Group	PF
1	2.07E-10
2	8.60E-08
3	7.25E-08
4	7.04E-07
5	5.67E-06
6	5.56E-06
7	7.97E-05
8	1.88E-04
9	2.49E-04
10	1.04E-04
11	9.83E-05
12	7.66E-05
13	1.65E-05
14	1.37E-08
15	3.12E-07
16	3.56E-08
17	1.43E-09
18	5.51E-08
19	3.64E-11
20	2.02E-13
21	1.23E-16
22	1.98E-18
23	0.00E+00
24	0.00E+00
25	0.00E+00
26	0.00E+00
27	0.00E+00
28	0.00E+00
29	0.00E+00
30	1.34E-04
31	2.94E-04
32	7.77E-05
33	4.97E-06
34	5.56E-08
36	9.81E-07

Coplanar PCBs

CAS #	Name	HOP10 g/sec	Corrected HOP10 g/sec
31508-00-6	2,3',4,4',5-Pentachlorobiphenyl (PBC 118)	1.22E-12	1.22E-12
32598-13-3	3,3',4,4'-Tetrachlorobiphenyl (TCB)	1.22E-12	1.22E-12
32598-14-4	2,3,3',4,4'-Pentachlorobiphenyl (PCB 105)	1.22E-12	1.22E-12
32774-16-6	3,3',4,4',5,5'-Hexachlorobiphenyl	1.22E-12	1.22E-12
35065-29-3	2,2',3,4,4',5,5'-Heptachlorobiphenyl	1.22E-12	1.22E-12
35065-30-6	2,2',3,3',4,4',5-Heptachlorobiphenyl	1.22E-12	1.22E-12
38380-08-4	2,3,3',4,4',5-Hexachlorobiphenyl (PCB 157)	1.22E-12	1.22E-12
39635-31-9	2,3,3',4,4',5,5'-Heptachlorobiphenyl	1.22E-12	1.22E-12
52663-72-6	2,3',4,4',5,5'-Hexachlorobiphenyl	1.22E-12	1.22E-12
57465-28-8	3,3',4,4',5-Pentachlorobiphenyl	1.22E-12	1.22E-12
65510-44-3	2',3,4,4',5-Pentachlorobiphenyl	1.22E-12	1.22E-12
69782-90-7	2,3,3',4,4',5'-Hexachlorobiphenyl	1.22E-12	1.22E-12
70362-50-4	3,4,4',5-Tetrachlorobiphenyl	1.22E-12	1.22E-12
74472-37-0	2,3,4,4',5-Pentachlorobiphenyl	1.22E-12	1.22E-12
1336-36-3	Polychlorinated biphenyls (PCBs)	1.69E-08	
1336-36-3	UnCorrected (for coplanar PCBs)	1.70E-08	

Correction for Coplanar PCBs
0.99 as parent
0.01 as coplanar sum

Table B-11 HOP31 - Assumed HLW Melter Offgas System

CAS #	COPC	HWP08 g/sec	Phase	F_v	Fraction vapor adjusted	Fraction particle	HOP07 g/sec vapor	HOP07 g/sec particle	HOP07 g/sec	HOP10 g/sec	HOP11 g/sec	HOP31 g/sec vapor	HOP31 g/sec particle	HOP31 g/sec	Corrected HOP31 g/sec
100-00-5	p-Nitrochlorobenzene	6.49E-08	vapor	1.000	1.000	0.000	6.49E-08	0.00E+00	6.49E-08	2.87E-09	6.88E-08	4.49E-08	0.00E+00	4.49E-08	4.49E-08
100-21-0	p-Phthalic acid	2.28E-03	vapor	1.000	1.000	0.000	2.28E-03	0.00E+00	2.28E-03	8.67E-12	2.28E-03	1.14E-04	0.00E+00	1.14E-04	1.14E-04
100-41-4	Ethyl benzene	0.00E+00	vapor	1.000	1.000	0.000	0.00E+00	0.00E+00	0.00E+00	0.00E+00	0.00E+00	0.00E+00	0.00E+00	0.00E+00	0.00E+00
100-42-5	Styrene	0.00E+00	vapor	1.000	1.000	0.000	0.00E+00	0.00E+00	0.00E+00	1.04E-13	1.04E-13	5.21E-15	0.00E+00	5.21E-15	5.21E-15
10061-01-5	cis-1,3-Dichloropropene	1.51E-15	vapor	1.000	1.000	0.000	1.51E-15	0.00E+00	1.51E-15	2.87E-13	2.88E-13	1.49E-14	0.00E+00	1.49E-14	1.49E-14
10061-02-6	trans-1,3-Dichloropropene	8.78E-14	vapor	1.000	1.000	0.000	8.78E-14	0.00E+00	8.78E-14	4.10E-12	4.10E-12	2.08E-13	0.00E+00	2.08E-13	2.08E-13
101-55-3	4-Bromophenylphenyl ether	4.07E-08	vapor	1.000	1.000	0.000	4.07E-08	0.00E+00	4.07E-08	5.88E-08	9.93E-08	4.97E-09	0.00E+00	4.97E-09	4.97E-09
101-84-8	Diphenyl ether	1.22E-12	vapor	1.000	1.000	0.000	1.22E-12	0.00E+00	1.22E-12	3.86E-11	4.07E-11	2.03E-12	0.00E+00	2.03E-12	2.03E-12
106-35-4	3-Heptanone	2.72E-08	vapor	1.000	1.000	0.000	2.72E-08	0.00E+00	2.72E-08	3.81E-08	6.62E-08	3.31E-10	0.00E+00	3.31E-10	3.31E-10
106-42-3	p-Xylene (Dimethyl benzene)	1.28E-15	vapor	1.000	1.000	0.000	1.28E-15	0.00E+00	1.28E-15	2.60E-13	2.62E-13	1.31E-14	0.00E+00	1.31E-14	1.31E-14
106-46-7	1,4-Dichlorobenzene	4.88E-13	vapor	1.000	1.000	0.000	4.88E-13	0.00E+00	4.88E-13	1.54E-11	1.63E-11	8.13E-13	0.00E+00	8.13E-13	8.13E-13
106-88-7	1,2-Epoxybutane	6.86E-10	vapor	1.000	1.000	0.000	6.86E-10	0.00E+00	6.86E-10	2.22E-09	2.93E-09	1.46E-10	0.00E+00	1.46E-10	1.46E-10
106-93-4	Ethylene dibromide (Dibromoethane)	3.80E-12	vapor	1.000	1.000	0.000	3.80E-12	0.00E+00	3.80E-12	6.08E-11	6.44E-11	3.22E-12	0.00E+00	3.22E-12	3.22E-12
106-97-8	Butane	0.00E+00	vapor	1.000	1.000	0.000	0.00E+00	0.00E+00	0.00E+00	0.00E+00	0.00E+00	0.00E+00	0.00E+00	0.00E+00	0.00E+00
106-99-0	1,3-Butadiene	0.00E+00	vapor	1.000	1.000	0.000	0.00E+00	0.00E+00	0.00E+00	0.00E+00	0.00E+00	0.00E+00	0.00E+00	0.00E+00	0.00E+00
107-02-8	Acrolein	6.79E-09	vapor	1.000	1.000	0.000	6.79E-09	0.00E+00	6.79E-09	9.79E-09	1.66E-08	8.28E-10	0.00E+00	8.28E-10	8.28E-10
107-05-1	3-Chloropropene (Allyl chloride)	0.00E+00	vapor	1.000	1.000	0.000	0.00E+00	0.00E+00	0.00E+00	0.00E+00	0.00E+00	0.00E+00	0.00E+00	0.00E+00	0.00E+00
107-06-2	1,2-Dichloroethane (Ethylene chloride)	8.78E-14	vapor	1.000	1.000	0.000	8.78E-14	0.00E+00	8.78E-14	4.10E-12	4.10E-12	2.08E-13	0.00E+00	2.08E-13	2.08E-13
107-12-0	Propanitrile	2.75E-07	vapor	1.000	1.000	0.000	2.75E-07	0.00E+00	2.75E-07	1.18E-07	3.93E-07	1.97E-08	0.00E+00	1.97E-08	1.97E-08
107-13-1	Acrylonitrile	1.36E-08	vapor	1.000	1.000	0.000	1.36E-08	0.00E+00	1.36E-08	1.95E-08	3.31E-08	1.66E-09	0.00E+00	1.66E-09	1.66E-09
107-18-6	2-Propene-1-ol	1.30E-04	vapor	1.000	1.000	0.000	1.30E-04	0.00E+00	1.30E-04	4.46E-08	1.35E-04	6.73E-06	0.00E+00	6.73E-06	6.73E-06
107-31-3	Formic acid, methyl ester	4.17E-09	vapor	1.000	1.000	0.000	4.17E-09	0.00E+00	4.17E-09	1.34E-08	1.76E-08	8.78E-10	0.00E+00	8.78E-10	8.78E-10
107-66-4	Dibutylphosphate	2.17E-03	particle bound	0.995	0.995	0.005	2.16E-03	2.71E-08	2.16E-03	2.63E-07	2.16E-03	1.07E-04	3.00E-14	1.07E-04	1.07E-04
107-87-9	2-Pentanone	1.36E-08	vapor	1.000	1.000	0.000	1.36E-08	0.00E+00	1.36E-08	1.95E-08	3.31E-08	1.66E-09	0.00E+00	1.66E-09	1.66E-09
108-03-2	1-Nitropropane	4.07E-08	vapor	1.000	1.000	0.000	4.07E-08	0.00E+00	4.07E-08	5.88E-08	9.93E-08	4.97E-09	0.00E+00	4.97E-09	4.97E-09
108-05-4	Vinyl acetate	1.50E-10	vapor	1.000	1.000	0.000	1.50E-10	0.00E+00	1.50E-10	1.53E-09	1.68E-09	8.38E-11	0.00E+00	8.38E-11	8.38E-11
108-10-1	Hexone (4-Methyl-2-pentanone or MIBK)	6.79E-09	vapor	1.000	1.000	0.000	6.79E-09	0.00E+00	6.79E-09	9.79E-09	1.66E-08	8.28E-10	0.00E+00	8.28E-10	8.28E-10
108-20-3	Diisopropyl ether	1.22E-12	vapor	1.000	1.000	0.000	1.22E-12	0.00E+00	1.22E-12	3.84E-11	4.06E-11	2.03E-12	0.00E+00	2.03E-12	2.03E-12
108-38-3	m-Xylene (Dimethyl benzene)	1.28E-15	vapor	1.000	1.000	0.000	1.28E-15	0.00E+00	1.28E-15	2.60E-13	2.62E-13	1.31E-14	0.00E+00	1.31E-14	1.31E-14
108-39-4	m-Cresol	9.71E-08	vapor	1.000	1.000	0.000	9.71E-08	0.00E+00	9.71E-08	1.78E-08	9.88E-08	4.94E-09	0.00E+00	4.94E-09	4.94E-09
108-87-2	Methylcyclohexane	0.00E+00	vapor	1.000	1.000	0.000	0.00E+00	0.00E+00	0.00E+00	0.00E+00	0.00E+00	0.00E+00	0.00E+00	0.00E+00	0.00E+00
108-88-3	Toluene	0.00E+00	vapor	1.000	1.000	0.000	0.00E+00	0.00E+00	0.00E+00	4.66E-15	4.66E-15	2.33E-16	0.00E+00	2.33E-16	0.00E+00
108-90-7	Chlorobenzene	0.00E+00	vapor	1.000	1.000	0.000	0.00E+00	0.00E+00	0.00E+00	1.04E-13	1.04E-13	5.21E-15	0.00E+00	5.21E-15	5.21E-15
108-93-0	Cyclohexanol	2.17E-05	vapor	1.000	1.000	0.000	2.17E-05	0.00E+00	2.17E-05	7.44E-07	2.24E-05	1.12E-06	0.00E+00	1.12E-06	1.12E-06
108-94-1	Cyclohexanone	7.17E-06	vapor	1.000	1.000	0.000	7.17E-06	0.00E+00	7.17E-06	7.03E-07	7.87E-06	3.93E-07	0.00E+00	3.93E-07	3.93E-07
108-95-2	Phenol	1.86E-03	vapor	1.000	1.000	0.000	1.86E-03	0.00E+00	1.86E-03	9.53E-08	1.86E-03	9.30E-05	0.00E+00	9.30E-05	9.30E-05
109-66-0	n-Pentane	0.00E+00	vapor	1.000	1.000	0.000	0.00E+00	0.00E+00	0.00E+00	0.00E+00	0.00E+00	0.00E+00	0.00E+00	0.00E+00	0.00E+00
109-99-9	Tetrahydrofuran	1.10E-07	vapor	1.000	1.000	0.000	1.10E-07	0.00E+00	1.10E-07	4.73E-08	1.57E-07	7.87E-09	0.00E+00	7.87E-09	7.87E-09
110-12-3	5-Methyl-2-hexanone	2.79E-10	vapor	1.000	1.000	0.000	2.79E-10	0.00E+00	2.79E-10	8.92E-10	1.17E-09	5.85E-11	0.00E+00	5.85E-11	5.85E-11
110-43-0	2-Heptanone	2.79E-10	vapor	1.000	1.000	0.000	2.79E-10	0.00E+00	2.79E-10	8.92E-10	1.17E-09	5.85E-11	0.00E+00	5.85E-11	5.85E-11
110-54-3	n-Hexane	0.00E+00	vapor	1.000	1.000	0.000	0.00E+00	0.00E+00	0.00E+00	0.00E+00	0.00E+00	0.00E+00	0.00E+00	0.00E+00	0.00E+00
110-62-3	n-Valeraldehyde	4.17E-09	vapor	1.000	1.000	0.000	4.17E-09	0.00E+00	4.17E-09	1.34E-08	1.76E-08	8.78E-10	0.00E+00	8.78E-10	8.78E-10
110-82-7	Cyclohexane	0.00E+00	vapor	1.000	1.000	0.000	0.00E+00	0.00E+00	0.00E+00	0.00E+00	0.00E+00	0.00E+00	0.00E+00	0.00E+00	0.00E+00
110-83-8	Cyclohexene	0.00E+00	vapor	1.000	1.000	0.000	0.00E+00	0.00E+00	0.00E+00	0.00E+00	0.00E+00	0.00E+00	0.00E+00	0.00E+00	0.00E+00
110-86-1	Pyridine	1.43E-06	vapor	1.000	1.000	0.000	1.43E-06	0.00E+00	1.43E-06	1.40E-08	1.57E-06	7.87E-07	0.00E+00	7.87E-07	7.87E-07
111-65-9	n-Octane	0.00E+00	vapor	1.000	1.000	0.000	0.00E+00	0.00E+00	0.00E+00	0.00E+00	0.00E+00	0.00E+00	0.00E+00	0.00E+00	0.00E+00
111-76-2	Ethylene glycol monobutyl ether	5.83E-04	vapor	1.000	1.000	0.000	5.83E-04	0.00E+00	5.83E-04	1.07E-08	5.83E-04	2.87E-05	0.00E+00	2.87E-05	2.87E-05
111-84-2	n-Nonane	0.00E+00	vapor	1.000	1.000	0.000	0.00E+00	0.00E+00	0.00E+00	0.00E+00	0.00E+00	0.00E+00	0.00E+00	0.00E+00	0.00E+00
117-81-7	Bis(2-ethylhexyl)phthalate (DEHP)	1.25E-03	particle bound	0.130	0.130	0.870	1.63E-04	2.77E-06	1.66E-04	5.77E-08	1.72E-04	1.11E-05	4.15E-13	1.11E-05	1.11E-05
117-84-0	n-Dioctyl phthalate	6.06E-05	particle bound	0.852	0.852	0.148	5.16E-05	2.24E-08	5.16E-05	3.33E-08	5.80E-05	2.34E-06	2.28E-14	2.34E-06	2.34E-06
120-12-7	Anthracene	7.28E-07	particle bound	0.998	0.998	0.002	7.28E-07	1.63E-12	7.28E-07	6.57E-07	1.16E-06	5.80E-08	6.68E-18	5.80E-08	5.80E-08
120-82-1	1,2,4-Trichlorobenzene	1.88E-13	vapor	1.000	1.000	0.000	1.88E-13	0.00E+00	1.88E-13	1.02E-11	1.04E-11	5.20E-13	0.00E+00	5.20E-13	5.20E-13
120-83-2	2,4-Dichlorophenol	1.30E-04	vapor	1.000	1.000	0.000	1.30E-04	0.00E+00	1.30E-04	4.46E-08	1.35E-04	6.73E-06	0.00E+00	6.73E-06	6.73E-06
121-44-8	Triethylamine	8.95E-10	vapor	1.000	1.000	0.000	8.95E-10	0.00E+00	8.95E-10	2.73E-09	2.93E-09	1.46E-10	0.00E+00	1.46E-10	1.46E-10
121-69-7	Dimethylaniline	2.75E-07	vapor	1.000	1.000	0.000	2.75E-07	0.00E+00	2.75E-07	1.18E-07	3.93E-07	1.97E-08	0.00E+00	1.97E-08	1.97E-08
122-39-4	N,N-Diphenylamine	8.88E-09	vapor	1.000	1.000	0.000	8.88E-09	0.00E+00	8.88E-09	2.87E-09	8.88E-09	4.44E-09	0.00E+00	4.44E-09	4.44E-09
123-19-3	4-Heptanone	1.10E-07	vapor	1.000	1.000	0.000	1.10E-07	0.00E+00	1.10E-07	4.73E-08	1.57E-07	7.87E-09	0.00E+00	7.87E-09	7.87E-09
123-38-6	n-Propionaldehyde	1.36E-08	vapor	1.000	1.000	0.000	1.36E-08	0.00E+00	1.36E-08	1.95E-08	3.31E-08	1.66E-09	0.00E+00	1.66E-09	1.66E-09
123-51-3	3-Methyl-1-butanol	4.28E-06	vapor	1.000	1.000	0.000	4.28E-06	0.00E+00	4.28E-06	3.67E-07	4.81E-06	2.40E-07	0.00E+00	2.40E-07	2.40E-07
123-86-4	Acetic acid n-butyl ester	4.72E-13	vapor	1.000	1.000	0.000	4.72E-13	0.00E+00	4.72E-13	4.82E-12	5.29E-12	2.65E-13	0.00E+00	2.65E-13	2.65E-13
123-91-1	1,4-Dioxane	4.34E-06	vapor	1.000	1.000	0.000	4.34E-06	0.00E+00	4.34E-06	1.49E-07	4.48E-06	2.24E-07	0.00E+00	2.24E-07	2.24E-07
126-73-8	Tributyl phosphate	1.51E-03	particle bound	0.996	0.996	0.004	1.51E-03	1.51E-08	1.51E-03	2.28E-08	1.51E-03	7.51E-05	1.88E-14	7.51E-05	7.51E-05
126-98-7	2-Methyl-2-propenenitrile (Methacrylonitrile)	2.48E-11	vapor	1.000	1.000	0.000	2.48E-11	0.00E+00	2.48E-11	2.58E-10	2.80E-10	1.40E-11	0.00E+00	1.40E-11	1.40E-11
127-18-4	Perchloroethylene (tetrachloroethylene)	0.00E+00	vapor	1.000	1.000	0.000	0.00E+00	0.00E+00	0.00E+00	0.00E+00	0.00E+00	0.00E+00	0.00E+00	0.00E+00	0.00E+00
127-19-5	N,N-Dimethylacetamide	3.61E-04	vapor	1.000	1.000	0.000	3.61E-04	0.00E+00	3.61E-04	4.06E-08	3.61E-04	1.81E-05	0.00E+00	1.81E-05	1.81E-05
128-37-0	2,6-Bis(tert-butyl)-4-methylphenol	2.02E-05	vapor	1.000	1.000	0.000	2.02E-05	0.00E+00	2.02E-05	1.11E-06	2.13E-05	1.07E-06	0.00E+00	1.07E-06	1.07E-06
129-00-0	Pyrene	3.44E-05	particle bound	0.994	0.994	0.006	3.44E-05	3.18E-10	3.44E-05	4.29E-08	3.87E-05	1.92E-06	6.44E-16	1.92E-06	1.92E-06
1321-64-8	Pentachloronaphthalene	7.30E-12	particle bound	0.971	0.971	0.029	7.14E-12	5.32E-16	7.14E-12	2.37E-10	2.44E-10	1.19E-11	1.87E-20	1.19E-11	1.19E-11
1321-65-9	Trichloronaphthalene	4.17E-09	particle bound	0.999	0.999	0.001	4.17E-09	7.04E-14	4.17E-09	1.34E-08	1.76E-08	8.78E-10	4.47E-20	8.78E-10	8.78E-10
132-64-9	Dibenzofuran	8.33E-09	particle bound	0.999	0.999	0.001	8.33E-09	2.09E-14	8.33E-09	2.66E-08	3.48E-08	1.74E-09	8.88E-20	1.74E-09	1.74E-09
1335-87-1	Hexachloronaphthalene	4.07E-08	particle bound	0.984	0.984	0.016	4.01E-08	1.63E-12	4.01E-08	5.88E-08	9.47E-08	4.88E-09	4.38E-18	4.88E-09	4.88E-09
1335-88-2	Tetrachloronaphthalene	4.17E-08	particle bound	0.991	0.991	0.009	4.13E-08	6.36E-14	4.13E-08	1.34E-08	1.75E-08	8.86E-10	4.38E-18	8.86E-10	8.86E-10
1336-36-3	Polychlorinated biphenyls (PCBs)	2.08E-10	vapor	1.000	1.000	0.000	2.08E-10	0.00E+00	2.08E-10	1.88E-09	1.88E-09	9.47E-11	0.00E+00	9.47E-11	9.47E-11
141-78-6	Acetic acid ethyl ester (Ethyl acetate)	1.28E-10	vapor	1.000	1.000	0.000	1.28E-10	0.00E+00	1.28E-10	3.08E-10	3.13E-10	1.57E-11	0.00E+00	1.57E-11	1.57E-11
141-79-7	4-Methyl-3-penten-2-one	1.66E-06	vapor	1.000	1.000	0.000	1.66E-06	0.00E+00	1.66E-06	7.08E-07	2.36E-06	1.18E-07	0.00E+00	1.18E-07	1.18E-07
142-82-5	n-Heptane	0.00E+00	vapor	1.000	1.000	0.000	0.00E+00	0.00E+00	0.00E+00	0.00E+00	0.00E+00	0.00E+00	0.00E+00	0.00E+00	0.00E+00
144-62-7	Oxalic acid	1.08E-01	vapor	1.000	1.000	0.000	1.08E-01	0.00E+00	1.08E-01	1.55E-07	1.08E-01	5.40E-03	0.00E+00	5.40E-03	5.40E-03
156-60-5	trans-1,2-Dichloroethylene	0.00E+00	vapor	1.000	1.000	0.000	0.00E+00	0.00E+00	0.00E+00	1.44E-15	1.44E-15	7.20E-17	0.00E+00	7.20E-17	0.00E+00
1634-04-4	Methyl tert-butyl ether	2.48E-11	vapor	1.000	1.000	0.000	2.48E-11	0.00E+00	2.48E-11	2.59E-10	2.80E-10	1.40E-11	0.00E+00	1.40E-11	1.40E-11
189-55-9	Dibenzo(a,i)pyrene	2.17E-03	particle	0.000	0.000	1.000	0.00E+00	5.42E-08	5.42E-08	2.43E-07	5.88E-08	0.00E+00	1.57E-14	1.57E-14	1.57E-14
189-64-0	Dibenzo(a,h)pyrene	2.17E-03	particle	0.000	0.000	1.000	0.00E+00	5.42E-08	5.42E-08	2.43E-07	5.88E-08	0.00E+00	1.57E-14	1.57E-14	1.57E-14
191-24-2	Benzo(g,h,i)perylene	1.35E-03	particle bound	0.065	0.065	0.935	8.15E-05	2.83E-08	8.45E-05	5.77E-08	9.02E-05	2.93E-07	3.34E-13	2.93E-07	2.93E-07
191-30-0	Dibenzo(a,l)pyrene	2.17E-03	particle	0.000	0.000	1.000	0.00E+00	5.42E-08	5.42E-08	2.43E-07	5.88E-08	0.00E+00	1.57E-14	1.57E-14	1.57E-14
192-65-4	Dibenzo(a,e)pyrene	2.17E-03	particle	0.000	0.000	1.000	0.00E+00	5.42E-08	5.42E-08	2.63E-07	5.88E-08	0.00E+00	1.57E-14	1.57E-14	1.57E-14
193-39-5	Indeno(1,2,3-cd)pyrene	3.84E-15	particle	0.000	0.000	1.000	0.00E+00	7.10E-13	7.10E-13	9.15E-08	9.15E-08	0.00E+00	2.54E-17	2.54E-17	0.00E+00
206-44-0	Fluoranthene	7.38E-12	particle bound	0.992	0.992	0.008	7.33E-12	1.48E-16	7.33E-12	2.36E-10	2.44E-10	1.22E-11	5.46E-21	1.22E-11	1.22E-11
208-96-8	Acenaphthylene	8.15E-08	vapor	1.000	1.000	0.000	8.15E-08	0.00E+00	8.15E-08	1.17E-07	1.99E-07	9.93E-09	0.00E+00	9.93E-09	9.93E-09
2234-13-1	Octachloronaphthalene	1.26E-10	particle bound	0.629	0.629	0.371	8.08E-11	1.18E-13	8.10E-11	1.86E-10	2.66E-10	8.36E-12	2.74E-18	8.36E-12	8.36E-12
224-42-0	Dibenzo(a,j)acridine	2.16E-03	particle bound	0.241	0.241	0.759	5.21E-04	4.10E-08	5.22E-04	3.02E-08	5.25E-04	6.32E-06	1.11E-12	6.32E-06	6.32E-06
226-36-8	Dibenzo(a,h)acridine	2.16E-03	particle bound	0.285	0.285	0.715	6.16E-04	3.88E-08	6.20E-04	3.07E-08	6.2[illegible]E-04	8.93E-06	1.23E-12	[illegible]	[illegible]
25551-13-7	Trimethyl benzene	1.28E-15	vapor	1.000	1.000	0.000	1.28E-15	0.00E+00	1.28E-15	2.60E-13	2.62E-13	1.31E-14	0.00E+00	1.31E-14	1.31E-14
26140-60-3	Terphenyl	7.38E-12	particle bound	0.872	0.872	0.128	6.43E-12	2.36E-15	6.44E-12	2.36E-10	2.44E-10	1.07E-11	6.88E-20	1.07E-11	1.07E-11
27154-33-2	Trichlorofluoroethane	0.00E+00	vapor	1.000	1.000	0.000	0.00E+00	0.00E+00	0.00E+00	0.00E+00	0.00E+00	0.00E+00	0.00E+00	0.00E+00	0.00E+00
287-92-3	Cyclopentane	0.00E+00	vapor	1.000	1.000	0.000	0.00E+00	0.00E+00	0.00E+00	0.00E+00	0.00E+00	0.00E+00	0.00E+00	0.00E+00	0.00E+00
3697-24-3	5-Methylchrysene	7.40E-12	particle bound	0.823	0.823	0.177	6.09E-12	3.27E-15	6.09E-12	2.36E-10	2.45E-10	1.01E-11	1.20E-19	1.01E-11	1.01E-11
3825-26-1	Ammonium perfluorooctanoate	4.07E-08	vapor	1.000	1.000	0.000	4.07E-08	0.00E+00	4.07E-08	5.88E-08	9.93E-08	4.97E-09	0.00E+00	4.97E-09	4.97E-09
4170-30-3	2-Butenaldehyde (2-Butenal or Crotonaldehyde)	7.02E-06	vapor	1.000	1.000	0.000	7.02E-06	0.00E+00	7.02E-06	6.87E-07	7.71E-06	3.86E-07	0.00E+00	3.86E-07	3.86E-07
50-00-0	Formaldehyde	2.93E-04	vapor	1.000	1.000	0.000	2.93E-04	0.00E+00	2.93E-04	1.34E-08	2.93E-04	1.47E-05	0.00E+00	1.47E-05	1.47E-05
50-32-8	Benzo(a)pyrene	1.66E-03	particle bound	0.290	0.290	0.710	4.81E-04	2.62E-08	4.84E-04	7.30E-08	4.71E-04	6.83E-06	6.79E-13	6.83E-06	6.83E-06
53-70-3	Dibenzo(a,h)anthracene	1.44E-03	particle bound	0.054	0.054	0.946	7.76E-05	3.40E-08	8.10E-05	2.14E-08	8.31E-05	2.24E-07	2.19E-13	2.24E-07	2.24E-07
540-59-0	1,2-Dichloroethylene	1.28E-15	vapor	1.000	1.000	0.000	1.28E-15	0.00E+00	1.28E-15	2.60E-13	2.62E-13	1.31E-14	0.00E+00	1.31E-14	1.31E-14
540-84-1	2,2,4-Trimethylpentane	0.00E+00	vapor	1.000	1.000	0.000	0.00E+00	0.00E+00	0.00E+00	0.00E+00	0.00E+00	0.00E+00	0.00E+00	0.00E+00	0.00E+00
541-73-1	1,3-Dichlorobenzene	0.00E+00	vapor	1.000	1.000	0.000	0.00E+00	0.00E+00	0.00E+00	1.04E-13	1.04E-13	5.21E-15	0.00E+00	5.21E-15	5.21E-15
56-23-5	Carbon tetrachloride	0.00E+00	vapor	1.000	1.000	0.000	0.00E+00	0.00E+00	0.00E+00	0.00E+00	0.00E+00	0.00E+00	0.00E+00	0.00E+00	0.00E+00
563-80-4	3-Methyl-2-butanone	6.79E-09	vapor	1.000	1.000	0.000	6.79E-09	0.00E+00	6.79E-09	9.79E-09	1.66E-08	8.28E-10	0.00E+00	8.28E-10	8.28E-10
56-49-5	3-Methylcholanthrene	0.00E+00	particle bound	0.364	0.364	0.636	0.00E+00	0.00E+00	0.00E+00	0.00E+00	0.00E+00	0.00E+00	0.00E+00	0.00E+00	0.00E+00
57-14-7	1,1-Dimethylhydrazine	2.88E-05	vapor	1.000	1.000	0.000	2.88E-05	0.00E+00	2.88E-05	3.38E-08	2.88E-05	1.44E-06	0.00E+00	1.44E-06	1.44E-06
58-90-2	2,3,4,6-Tetrachlorophenol	5.01E-05	vapor	1.000	1.000	0.000	5.01E-05	0.00E+00	5.01E-05	4.53E-08	5.46E-05	2.73E-06	0.00E+00	2.73E-06	2.73E-06
591-78-6	2-Hexanone	6.79E-09	vapor	1.000	1.000	0.000	6.79E-09	0.00E+00	6.79E-09	9.79E-09	1.66E-08	8.28E-10	0.00E+00	8.28E-10	8.28E-10
59-50-7	4-Chloro-3-methylphenol	6.08E-08	vapor	1.000	1.000	0.000	6.08E-08	0.00E+00	6.08E-08	1.33E-08	6.39E-08	3.20E-09	0.00E+00	3.20E-09	3.20E-09
59-89-2	N-Nitrosomorpholine	7.41E-12	vapor	1.000	1.000	0.000	7.41E-12	0.00E+00	7.41E-12	2.28E-10	2.45E-10	1.22E-11	0.00E+00	1.22E-11	1.22E-11
602-87-9	5-Nitroacenaphthene	5.83E-04	particle bound	0.997	0.997	0.003	5.81E-04	4.37E-09	5.81E-04	1.07E-08	5.82E-04	2.89E-05	4.89E-13	2.89E-05	2.89E-05
60-29-7	Ethyl ether	1.01E-12	vapor	1.000	1.000	0.000	1.01E-12	0.00E+00	1.01E-12	6.14E-11	6.25E-11	3.12E-12	0.00E+00	3.12E-12	3.12E-12
603-34-9	Triphenylamine	1.21E-04	vapor	1.000	1.000	0.000	1.21E-04	0.00E+00	1.21E-04	6.86E-08	1.30E-04	6.36E-06	0.00E+00	6.36E-06	6.36E-06
60-34-4	Methylhydrazine	2.17E-05	vapor	1.000	1.000	0.000	2.17E-05	0.00E+00	2.17E-05	7.44E-07	2.24E-05	1.12E-06	0.00E+00	1.12E-06	1.12E-06
60-35-5	Acetamide	3.61E-04	vapor	1.000	1.000	0.000	3.61E-04	0.00E+00	3.61E-04	4.06E-08	3.61E-04	1.81E-05	0.00E+00	1.81E-05	1.81E-05
621-64-7	Di-n-Propylnitrosamine (N-Nitroso-di-n-propylamine)	7.38E-12	vapor	1.000	1.000	0.000	7.38E-12	0.00E+00	7.38E-12	2.28E-10	2.45E-10	1.22E-11	0.00E+00	1.22E-11	1.22E-11
624-83-9	Methyl isocyanate	1.88E-13	vapor	1.000	1.000	0.000	1.88E-13	0.00E+00	1.88E-13	1.02E-11	1.04E-11	5.20E-13	0.00E+00	5.20E-13	5.20E-13
627-13-4	Nitric acid, propyl ester	8.45E-14	vapor	1.000	1.000	0.000	8.45E-14	0.00E+00	8.45E-14	3.12E-12	3.20E-12	2.60E-13	0.00E+00	2.60E-13	2.60E-13
62-75-9	N-Nitroso-N,N-dimethylamine (Dimethylnitrosamine)	5.83E-04	vapor	1.000	1.000	0.000	5.83E-04	0.00E+00	5.83E-04	1.07E-08	5.83E-04	2.87E-05	0.00E+00	2.87E-05	2.87E-05
630-20-6	1,1,1,2-Tetrachloroethane	1.22E-12	vapor	1.000	1.000	0.000	1.22E-12	0.00E+00	1.22E-12	3.84E-11	4.06E-11	2.03E-12	0.00E+00	2.03E-12	2.03E-12
64-17-5	Ethyl alcohol	2.17E-05	vapor	1.000	1.000	0.000	2.17E-05	0.00E+00	2.17E-05	7.44E-07	2.24E-05	1.12E-06	0.00E+00	1.12E-06	1.12E-06
64-18-6	Formic acid	5.67E-01	vapor	1.000	1.000	0.000	5.67E-01	0.00E+00	5.67E-01	8.54E-08	5.67E-01	2.84E-02	0.00E+00	2.84E-02	2.84E-02
64-19-7	Acetic acid	8.87E-05	vapor	1.000	1.000	0.000	8.87E-05	0.00E+00	8.87E-05	8.82E-08	8.88E-05	4.44E-06	0.00E+00	4.44E-06	4.44E-06
67-56-1	Methyl alcohol (Methanol)	2.17E-05	vapor	1.000	1.000	0.000	2.17E-05	0.00E+00	2.17E-05	7.44E-07	2.24E-05	1.12E-06	0.00E+00	1.12E-06	1.12E-06
67-63-0	2-Propyl alcohol (Isopropanol, Propan-2-Ol)	1.43E-06	vapor	1.000	1.000	0.000	1.43E-06	0.00E+00	1.43E-06	1.40E-07	1.57E-06	7.87E-08	0.00E+00	7.87E-08	7.87E-08
67-64-1	2-Propanone (Acetone)	5.50E-07	vapor	1.000	1.000	0.000	5.50E-07	0.00E+00	5.50E-07	2.38E-07	7.87E-07	3.93E-08	0.00E+00	3.93E-08	3.93E-08
67-66-3	Chloroform	0.00E+00	vapor	1.000	1.000	0.000	0.00E+00	0.00E+00	0.00E+00	1.04E-13	1.04E-13	5.21E-15	0.00E+00	5.21E-15	5.21E-15
67-72-1	Hexachloroethane	7.88E-15	vapor	1.000	1.000	0.000	7.88E-15	0.00E+00	7.88E-15	1.56E-12	1.57E-12	7.86E-14	0.00E+00	7.86E-14	7.86E-14
684-16-2	Hexafluoroacetone	1.28E-15	vapor	1.000	1.000	0.000	1.28E-15	0.00E+00	1.28E-15	2.60E-13	2.62E-13	1.31E-14	0.00E+00	1.31E-14	1.31E-14
71-23-8	n-Propyl alcohol	2.87E-06	vapor	1.000	1.000	0.000	2.87E-06	0.00E+00	2.87E-06	2.81E-07	3.15E-06	1.57E-07	0.00E+00	1.57E-07	1.57E-07
71-36-3	n-Butyl alcohol	7.17E-06	vapor	1.000	1.000	0.000	7.17E-06	0.00E+00	7.17E-06	7.03E-07	7.87E-06	3.93E-07	0.00E+00	3.93E-07	3.93E-07
71-43-2	Benzene	0.00E+00	vapor	1.000	1.000	0.000	0.00E+00	0.00E+00	0.00E+00	1.13E-14	1.13E-14	5.66E-16	0.00E+00	5.66E-16	0.00E+00
71-55-6	Methyl chloroform (1,1,1-Trichloroethane)	0.00E+00	vapor	1.000	1.000	0.000	0.00E+00	0.00E+00	0.00E+00	0.00E+00	0.00E+00	0.00E+00	0.00E+00	0.00E+00	0.00E+00
74-83-9	Bromomethane (Methyl bromide)	0.00E+00	vapor	1.000	1.000	0.000	0.00E+00	0.00E+00	0.00E+00	1.04E-13	1.04E-13	5.21E-15	0.00E+00	5.21E-15	5.21E-15
74-87-3	Chloromethane (Methyl chloride)	0.00E+00	vapor	1.000	1.000	0.000	0.00E+00	0.00E+00	0.00E+00	0.00E+00	0.00E+00	0.00E+00	0.00E+00	0.00E+00	0.00E+00
74-97-5	Bromochloromethane	1.88E-13	vapor	1.000	1.000	0.000	1.88E-13	0.00E+00	1.88E-13	1.02E-11	1.04E-11	5.20E-13	0.00E+00	5.20E-13	5.20E-13
74-88-4	[illegible]	0.00E+00	vapor	1.000	1.000	0.000	0.00E+00	0.00E+00	0.00E+00	8.64E-15	8.64E-15	4.32E-16	0.00E+00	4.32E-16	0.00E+00
75-00-3	Chloroethane	0.00E+00	vapor	1.000	1.000	0.000	0.00E+00	0.00E+00	0.00E+00	0.00E+00	0.00E+00	0.00E+00	0.00E+00	0.00E+00	0.00E+00
75-01-4	Vinyl chloride (1-Chloroethene)	0.00E+00	vapor	1.000	1.000	0.000	0.00E+00	0.00E+00	0.00E+00	0.00E+00	0.00E+00	0.00E+00	0.00E+00	0.00E+00	0.00E+00
75-05-8	Acetonitrile	4.28E-07	vapor	1.000	1.000	0.000	4.28E-07	0.00E+00	4.28E-07	1.83E-07	5.88E-07	2.93E-08	0.00E+00	2.93E-08	2.93E-08
75-07-0	Acetaldehyde	1.66E-06	vapor	1.000	1.000	0.000	1.66E-06	0.00E+00	1.66E-06	7.08E-07	2.36E-06	1.18E-07	0.00E+00	1.18E-07	1.18E-07
75-09-2	Dichloromethane (Methylene chloride)	0.00E+00	vapor	1.000	1.000	0.000	0.00E+00	0.00E+00	0.00E+00	1.04E-13	1.04E-13	5.21E-15	0.00E+00	5.21E-15	5.21E-15
75-12-7	Formamide	2.16E-03	vapor	1.000	1.000	0.000	2.16E-03	0.00E+00	2.16E-03	3.02E-08	2.16E-03	1.08E-04	0.00E+00	1.08E-04	1.08E-04
75-15-0	Carbon disulfide	0.00E+00	vapor	1.000	1.000	0.000	0.00E+00	0.00E+00	0.00E+00	1.44E-15	1.44E-15	7.20E-17	0.00E+00	7.20E-17	0.00E+00
75-21-8	Ethylene oxide (Oxirane)	1.36E-10	vapor	1.000	1.000	0.000	1.36E-10	0.00E+00	1.36E-10	4.48E-10	5.85E-10	2.93E-11	0.00E+00	2.93E-11	2.93E-11
75-27-4	Bromodichloromethane	1.22E-12	vapor	1.000	1.000	0.000	1.22E-12	0.00E+00	1.22E-12	3.84E-11	4.06E-11	2.03E-12	0.00E+00	2.03E-12	2.03E-12
75-34-3	1,1-Dichloroethane	0.00E+00	vapor	1.000	1.000	0.000	0.00E+00	0.00E+00	0.00E+00	1.04E-13	1.04E-13	5.21E-15	0.00E+00	5.21E-15	5.21E-15
75-35-4	1,1-Dichloroethene (Vinylidene chloride)	0.00E+00	vapor	1.000	1.000	0.000	0.00E+00	0.00E+00	0.00E+00	0.00E+00	0.00E+00	0.00E+00	0.00E+00	0.00E+00	0.00E+00
75-43-4	Dichlorofluoromethane	0.00E+00	vapor	1.000	1.000	0.000	0.00E+00	0.00E+00	0.00E+00	0.00E+00	0.00E+00	0.00E+00	0.00E+00	0.00E+00	0.00E+00
75-45-6	Chlorodifluoromethane	0.00E+00	vapor	1.000	1.000	0.000	0.00E+00	0.00E+00	0.00E+00	0.00E+00	0.00E+00	0.00E+00	0.00E+00	0.00E+00	0.00E+00
75-50-3	Trimethylamine	6.79E-09	vapor	1.000	1.000	0.000	6.79E-09	0.00E+00	6.79E-09	9.78E-09	1.66E-08	8.28E-10	0.00E+00	8.28E-10	8.28E-10
75-52-5	Nitromethane	1.66E-06	vapor	1.000	1.000	0.000	1.66E-06	0.00E+00	1.66E-06	7.08E-07	2.36E-06	1.18E-07	0.00E+00	1.18E-07	1.18E-07
75-56-9	2-Methylpropene	4.30E-06	vapor	1.000	1.000	0.000	4.30E-06	0.00E+00	4.30E-06	4.31E-08	4.72E-06	2.36E-07	0.00E+00	2.36E-07	2.36E-07
75-61-6	Difluorodibromomethane	0.00E+00	vapor	1.000	1.000	0.000	0.00E+00	0.00E+00	0.00E+00	0.00E+00	0.00E+00	0.00E+00	0.00E+00	0.00E+00	0.00E+00
75-63-8	Trifluorobromomethane	0.00E+00	vapor	1.000	1.000	0.000	0.00E+00	0.00E+00	0.00E+00	0.00E+00	0.00E+00	0.00E+00	0.00E+00	0.00E+00	0.00E+00
75-65-0	2-Methyl-2-propanol	7.17E-06	vapor	1.000	1.000	0.000	7.17E-06	0.00E+00	7.17E-06	7.03E-07	7.87E-06	3.93E-07	0.00E+00	3.93E-07	3.93E-07
75-69-4	Trichlorofluoromethane	0.00E+00	vapor	1.000	1.000	0.000	0.00E+00	0.00E+00	0.00E+00	0.00E+00	0.00E+00	0.00E+00	0.00E+00	0.00E+00	0.00E+00
75-71-8	Dichlorodifluoromethane	0.00E+00	vapor	1.000	1.000	0.000	0.00E+00	0.00E+00	0.00E+00	0.00E+00	0.00E+00	0.00E+00	0.00E+00	0.00E+00	0.00E+00
76-03-9	Trichloroacetic acid	3.61E-04	vapor	1.000	1.000	0.000	3.61E-04	0.00E+00	3.61E-04	4.06E-08	3.61E-04	1.81E-05	0.00E+00	1.81E-05	1.81E-05
76-11-9	1,1,1,2-Tetrachloro-2,2-difluoroethane	0.00E+00	vapor	1.000	1.000	0.000	0.00E+00	0.00E+00	0.00E+00	0.00E+00	0.00E+00	0.00E+00	0.00E+00	0.00E+00	0.00E+00
76-12-0	1,1,2,2-Tetrachloro-1,2-difluoroethane	0.00E+00	vapor	1.000	1.000	0.000	0.00E+00	0.00E+00	0.00E+00	0.00E+00	0.00E+00	0.00E+00	0.00E+00	0.00E+00	0.00E+00
76-13-1	1,2,2-Trichloro-1,1,2-trifluoroethane (Freon 113)	0.00E+00	vapor	1.000	1.000	0.000	0.00E+00	0.00E+00	0.00E+00	0.00E+00	0.00E+00	0.00E+00	0.00E+00	0.00E+00	0.00E+00
76-14-2	1,2-Dichloro-1,1,2,2-tetrafluoroethane	0.00E+00	vapor	1.000	1.000	0.000	0.00E+00	0.00E+00	0.00E+00	0.00E+00	0.00E+00	0.00E+00	0.00E+00	0.00E+00	0.00E+00
76-15-3	Chloropentafluoroethane	0.00E+00	vapor	1.000	1.000	0.000	0.00E+00	0.00E+00	0.00E+00	0.00E+00	0.00E+00	0.00E+00	0.00E+00	0.00E+00	0.00E+00
78-83-1	2-Methylpropyl alcohol (Isobutyl alcohol)	4.30E-06	vapor	1.000	1.000	0.000	4.30E-06	0.00E+00	4.30E-06	4.21E-08	4.72E-06	2.36E-07	0.00E+00	2.36E-07	2.36E-07
78-87-5	1,2-Dichloropropane	0.00E+00	vapor	1.000	1.000	0.000	0.00E+00	0.00E+00	0.00E+00	1.04E-13	1.04E-13	5.21E-15	0.00E+00	5.21E-15	5.21E-15
78-92-2	1-Methylpropyl alcohol (2-Butanol)	2.87E-06	vapor	1.000	1.000	0.000	2.87E-06	0.00E+00	2.87E-06	2.81E-07	3.15E-06	1.57E-07	0.00E+00	1.57E-07	1.57E-07
78-93-3	Methyl ethyl ketone (MEK, 2-Butanone)	2.75E-07	vapor	1.000	1.000	0.000	2.75E-07	0.00E+00	2.75E-07	1.18E-07	3.93E-07	1.97E-08	0.00E+00	1.97E-08	1.97E-08
79-00-5	1,1,2-Trichloroethane	1.88E-13	vapor	1.000	1.000	0.000	1.88E-13	0.00E+00	1.88E-13	1.02E-11	1.04E-11	5.20E-13	0.00E+00	5.20E-13	5.20E-13
79-01-6	Trichloroethylene	0.00E+00	vapor	1.000	1.000	0.000	0.00E+00	0.00E+00	0.00E+00	1.63E-15	1.63E-15	8.15E-17	0.00E+00	8.15E-17	0.00E+00
79-09-4	Propanoic acid	1.79E-03	vapor	1.000	1.000	0.000	1.79E-03	0.00E+00	1.79E-03	8.86E-08	1.77E-03	8.84E-05	0.00E+00	8.84E-05	8.84E-05
79-10-7	2-Propenoic acid	2.36E-03	vapor	1.000	1.000	0.000	2.36E-03	0.00E+00	2.36E-03	1.09E-08	2.36E-03	1.18E-04	0.00E+00	1.18E-04	1.18E-04
79-20-9	Methyl acetate	4.07E-08	vapor	1.000	1.000	0.000	4.07E-08	0.00E+00	4.07E-08	5.88E-08	9.93E-08	4.97E-09	0.00E+00	4.97E-09	4.97E-09
79-34-5	1,1,2,2-Tetrachloroethane	4.72E-14	vapor	1.000	1.000	0.000	4.72E-14	0.00E+00	4.72E-14	4.82E-13	5.29E-13	2.65E-14	0.00E+00	2.65E-14	2.65E-14
83-32-9	Acenaphthene	7.34E-12	vapor	1.000	1.000	0.000	7.34E-12	0.00E+00	7.34E-12	2.37E-10	2.44E-10	1.22E-11	0.00E+00	1.22E-11	1.22E-11
84-66-2	Diethyl phthalate	1.56E-03	vapor	1.000	1.000	0.000	1.56E-03	0.00E+00	1.56E-03	8.88E-08	1.57E-03	7.87E-05	0.00E+00	7.87E-05	7.87E-05
84-74-2	Dibutyl phthalate	6.93E-04	particle bound	0.994	0.994	0.006	6.89E-04	1.04E-08	6.89E-04	1.36E-07	7.00E-04	3.45E-05	1.17E-14	3.45E-05	3.45E-05
85-01-8	Phenanthrene	1.88E-06	particle bound	0.999	0.999	0.001	1.88E-06	4.13E-12	1.88E-06	7.08E-07	2.39E-06	1.19E-07	8.88E-18	1.19E-07	1.19E-07
85-68-7	Butylbenzyl phthalate	6.82E-04	particle bound	0.940	0.940	0.060	6.56E-04	8.08E-08	6.56E-04	1.36E-05	6.66E-04	3.17E-05	8.88E-14	3.17E-05	3.17E-05
86-73-7	Fluorene	4.07E-08	vapor	1.000	1.000	0.000	4.07E-08	0.00E+00	4.07E-08	5.88E-08	9.93E-08	4.97E-09	0.00E+00	4.97E-09	4.97E-09
87-68-3	Hexachlorobutadiene	0.00E+00	vapor	1.000	1.000	0.000	0.00E+00	0.00E+00	0.00E+00	1.25E-16	1.25E-16	6.23E-17	0.00E+00	6.23E-17	0.00E+00
88-06-2	2,4,6-Trichlorophenol	1.30E-04	vapor	1.000	1.000	0.000	1.30E-04	0.00E+00	1.30E-04	4.46E-08	1.35E-04	6.73E-06	0.00E+00	6.73E-06	6.73E-06
88-72-2	2-Nitrotoluene	4.28E-06	vapor	1.000	1.000	0.000	4.28E-06	0.00E+00	4.28E-06	3.67E-07	4.81E-06	2.40E-07	0.00E+00	2.40E-07	2.40E-07
88-75-5	2-Nitrophenol	2.88E-05	vapor	1.000	1.000	0.000	2.88E-05	0.00E+00	2.88E-05	3.38E-08	2.88E-05	1.44E-06	0.00E+00	1.44E-06	1.44E-06
88-89-1	Picric acid	2.16E-03	[illegible]	0.934	0.934	0.066	2.02E-03	3.87E-07	2.02E-03	3.88E-10	2.02E-03	9.44E-05	3.71E-13	1.04E-04	9.44E-05
91-20-3	Naphthalene	1.28E-11	vapor	1.000	1.000	0.000	1.28E-11	0.00E+00	1.28E-11	1.16E-10	1.27E-10	6.37E-12	0.00E+00	6.37E-12	6.37E-12
91-22-5	Quinoline	5.83E-04	vapor	1.000	1.000	0.000	5.83E-04	0.00E+00	5.83E-04	1.07E-08	5.83E-04	2.87E-05	0.00E+00	2.87E-05	2.87E-05
91-58-7	2-Chloronaphthalene	1.50E-10	vapor	1.000	1.000	0.000	1.50E-10	0.00E+00	1.50E-10	1.53E-09	1.68E-09	8.38E-11	0.00E+00	8.38E-11	8.38E-11
92-52-4	1,1'-Biphenyl	9.87E-11	vapor	1.000	1.000	0.000	9.87E-11	0.00E+00	9.87E-11	1.02E-08	1.12E-08	5.56E-11	0.00E+00	5.56E-11	5.56E-11
92-93-3	4-Nitrobiphenyl	1.30E-04	particle bound	0.999	0.999	0.001	1.30E-04	3.26E-10	1.30E-04	4.46E-08	1.35E-04	6.72E-06	3.71E-16	6.72E-06	6.72E-06
95-13-6	Indene	7.33E-12	vapor	1.000	1.000	0.000	7.33E-12	0.00E+00	7.33E-12	2.36E-10	2.44E-10	1.22E-11	0.00E+00	1.22E-11	1.22E-11
95-47-6	o-Xylene	0.00E+00	vapor	1.000	1.000	0.000	0.00E+00	0.00E+00	0.00E+00	1.04E-13	1.04E-13	5.21E-15	0.00E+00	5.21E-15	5.21E-15
95-48-7	o-Cresol (2-Methylphenol)	9.71E-08	vapor	1.000	1.000	0.000	9.71E-08	0.00E+00	9.71E-08	1.78E-08	9.88E-08	4.94E-09	0.00E+00	4.94E-09	4.94E-09
95-49-8	2-Chlorotoluene	7.88E-15	vapor	1.000	1.000	0.000	7.88E-15	0.00E+00	7.88E-15	1.56E-12	1.57E-12	7.86E-14	0.00E+00	7.86E-14	7.86E-14
95-50-1	o-Dichlorobenzene (1,2-Dichlorobenzene)	4.88E-13	vapor	1.000	1.000	0.000	4.88E-13	0.00E+00	4.88E-13	1.54E-11	1.63E-11	8.13E-13	0.00E+00	8.13E-13	8.13E-13
95-57-8	2-Chlorophenol	4.30E-06	vapor	1.000	1.000	0.000	4.30E-06	0.00E+00	4.30E-06	4.21E-08	4.72E-06	2.36E-07	0.00E+00	2.36E-07	2.36E-07
95-95-4	2,4,5-Trichlorophenol	5.83E-04	vapor	1.000	1.000	0.000	5.83E-04	0.00E+00	5.83E-04	1.07E-08	5.83E-04	2.87E-05	0.00E+00	2.87E-05	2.87E-05
96-22-0	3-Pentanone	1.36E-08	vapor	1.000	1.000	0.000	1.36E-08	0.00E+00	1.36E-08	1.95E-08	3.31E-08	1.66E-09	0.00E+00	1.66E-09	1.66E-09

General Primary Offgas DF

	SBS	WESP	Total
Vapor	1	1	1
Particle	20	20	400

General Secondary Offgas DF

	HEME	HEPA	S-Ag	Ag-Z	VOC Ox	SCR	Total
Vapor	1			1	20	1	20
Particle	80	2000000		1	20	1	3.2E+09

CALCULATION SHEET

BY: [illegible]
DATE: [illegible]

[illegible]

	A	B	C	D	E	F	G	H	I	J	K	L	M	N	O	P	Q	R	S	T	U	V	W	X	Y
1	Table B-11	HOP31 - Alleged HLW Money Offpost System																							
2						Fraction										Corrected									
3			HMP08					HOP07	HOP07		HOP10	HOP11	HOP31	HOP31	HOP31	HOP31									
4	CAS #	COPC	g/year	Phase	Fv	mass/year	Fcy/Sim	g/year	g/year	HOP07 g/year	g/year	g/year	g/year	g/year	g/year	g/year									
232	96-69-4	[illegible]	7.88E-15	vapor	1.000	1.000	0.000	7.88E-15	0.00E+00	7.88E-15	1.98E-12	1.97E-12	7.83E-14	0.00E+00	7.88E-14	7.88E-14									
233	96-91-1	[illegible]	0.00E+00	vapor	1.000	1.000	0.000	0.00E+00	0.00E+00	0.00E+00	0.00E+00	0.00E+00	0.00E+00	0.00E+00	0.00E+00	0.00E+00									
234	98-49-8	Cumene	0.00E+00	vapor	1.000	1.000	0.000	0.00E+00	0.00E+00	0.00E+00	8.64E-15	8.64E-15	3.32E-16	0.00E+00	4.32E-16	0.00E+00									
235	98-83-9	[illegible]	1.28E-15	vapor	1.000	1.000	0.000	1.28E-15	0.00E+00	1.28E-15	4.80E-12	2.62E-13	1.31E-14	0.00E+00	1.31E-14	1.31E-14									
236	99-99-2	[illegible]	1.48E-05	vapor	1.000	1.000	0.000	3.46E-05	0.00E+00	3.46E-05	2.81E-06	2.71E-05	1.38E-06	0.00E+00	1.38E-06	1.38E-06									
237	99-99-3	[illegible]	1.72E-06	vapor	1.000	1.000	0.000	1.72E-06	0.00E+00	1.72E-06	2.18E-06	1.82E-06	9.62E-07	0.00E+00	9.62E-07	9.62E-07									
238																									
239										7.91E-01															
240																									
241	Chlorinated PCBs									HOP07	HOP10	HOP11			HOP31	Corrected HOP31									
242										g/year	g/year	g/year			g/year	g/year									
243	31508-00-6	2,3',4,4',5-Pentachlorobiphenyl (PBC 118)								1.50E-13	1.22E-12	1.37E-12			8.63E-14	8.63E-14									
244	65510-13-3	2,3',4,4',5'-Pentachlorobiphenyl (TCB)								1.50E-13	1.22E-12	1.37E-12			8.63E-14	8.63E-14									
245	32598-14-4	2,3,3',4,4'-Pentachlorobiphenyl (PCB 105)								1.50E-13	1.22E-12	1.37E-12			8.63E-14	8.63E-14									
246	32774-16-6	3,3',4,4',5,5'-Hexachlorobiphenyl								1.50E-13	1.22E-12	1.37E-12			8.63E-14	8.63E-14									
247	35065-28-2	2,2',3,4,4',5,5'-Heptachlorobiphenyl								1.50E-13	1.22E-12	1.37E-12			8.63E-14	8.63E-14									
248	35065-30-4	2,2',3,3',4,4',5-Heptachlorobiphenyl								1.50E-13	1.22E-12	1.37E-12			8.63E-14	8.63E-14									
249	38380-08-4	2,3,3',4,4',5-Hexachlorobiphenyl (PCB 157)								1.50E-13	1.22E-12	1.37E-12			8.63E-14	8.63E-14									
250	39635-31-9	2,3,3',4,4',5,5'-Heptachlorobiphenyl								1.50E-13	1.22E-12	1.37E-12			8.63E-14	8.63E-14									
251	52663-72-6	2,3,3',4,4',5,5'-Heptachlorobiphenyl								1.50E-13	1.22E-12	1.37E-12			8.63E-14	8.63E-14									
252	52663-78-2	2,3,3',4,4',5'-Heptachlorobiphenyl								1.50E-13	1.22E-12	1.37E-12			8.63E-14	8.63E-14									
253	70424-69-0	3,3',4,4',5,5'-Hexachlorobiphenyl								1.50E-13	1.22E-12	1.37E-12			8.63E-14	8.63E-14									
254	74472-37-0	2,3,3',4,4',5-Hexachlorobiphenyl								1.50E-13	1.22E-12	1.37E-12			8.63E-14	8.63E-14									
255																									
256	1336-36-3	Polychlorinated biphenyls (PCBs)								2.00E-10	Correction for Congener PCBs														
257	1336-36-3	UNCorrected (for congener PCBs)								2.10E-10	0.9%	as percent													
258											0.01	as decimal, NO													

Table B-17 PJV32 - Unabated HLW PJM/RFD

Row	CAS #	COPC	Feed Rate g/sec	In ACM	Group	Grouping	Phase	PJV32 rate g/sec	Performance Factor	Adjusted PF	Calc'd rate PJV32 g/sec	Corrected PJV32 g/sec
4	100-00-5	p-Nitrochlorobenzene	2.86E-03	No		10	vapor			1.98E-09	5.65E-11	5.65E-11
5	100-21-0	p-Phthalic acid	4.29E-02	Yes	1	1	vapor	1.43E-08	3.34E-08		1.43E-08	1.43E-08
6	100-41-4	Ethyl benzene	2.86E-03	No		20	vapor			5.60E-51	1.60E-53	0.00E+00
7	100-42-5	Styrene	2.86E-03	No		19	vapor			6.10E-46	1.74E-48	0.00E+00
8	10061-01-5	cis-1,3-Dichloropropene	2.86E-03	Yes	18	18	vapor	3.21E-46	1.12E-43		3.21E-46	0.00E+00
9	10061-02-6	trans-1,3-Dichloropropene	2.86E-03	No		17	vapor			3.76E-44	1.07E-46	0.00E+00
10	101-55-3	4-Bromophenyl phenyl ether	4.29E-03	No		14	vapor			3.67E-27	1.57E-29	0.00E+00
11	101-84-8	Diphenyl ether	7.14E-03	Yes	18	18	vapor	0.00E+00	0.00E+00		0.00E+00	0.00E+00
12	106-35-4	3-Heptanone	2.86E-03	No		14	vapor			3.67E-27	1.05E-29	0.00E+00
13	106-42-3	p-Xylene (Dimethyl benzene)	7.14E-03	No		19	vapor			6.10E-46	4.36E-48	0.00E+00
14	106-46-7	1,4-Dichlorobenzene	2.86E-03	No		18	vapor			0.00E+00	0.00E+00	0.00E+00
15	106-88-7	1,2-Epoxybutane	7.14E-03	No		15	vapor			1.02E-40	7.30E-43	0.00E+00
16	106-93-4	Ethylene dibromide (Dibromoethane)	2.86E-03	Yes	16	16	vapor	1.32E-43	4.61E-41		1.32E-43	0.00E+00
17	106-97-8	Butane	7.14E-03	Yes	28	28	vapor	0.00E+00	0.00E+00		0.00E+00	0.00E+00
18	106-99-0	1,3-Butadiene	2.86E-03	Yes	29	29	vapor	0.00E+00	0.00E+00		0.00E+00	0.00E+00
19	107-02-8	Acrolein	7.14E-03	No		14	vapor			3.67E-27	2.62E-29	0.00E+00
20	107-05-1	3-Chloropropene (Allyl chloride)	2.86E-03	No		20	vapor			5.60E-51	1.60E-53	0.00E+00
21	107-06-2	1,2-Dichloroethane (Ethylene chloride)	2.86E-03	No		17	vapor			3.76E-44	1.07E-46	0.00E+00
22	107-12-0	Propionitrile	7.14E-03	No		13	vapor			8.69E-12	6.21E-14	6.21E-14
23	107-13-1	Acrylonitrile	1.43E-02	No		14	vapor			3.67E-27	5.25E-29	0.00E+00
24	107-18-6	2-Propene-1-ol	4.29E-02	No		10	vapor			1.98E-09	8.48E-11	8.48E-11
25	107-31-3	Formic acid, methyl ester	4.29E-02	No		15	vapor			1.02E-40	4.36E-42	0.00E+00
26	107-46-0	[illegible]	4.29E-02	No		9	particle bound			0.00E+00	0.00E+00	0.00E+00
27	107-87-9	2-Pentanone	1.43E-02	No		14	vapor			3.67E-27	5.25E-29	0.00E+00
28	108-03-2	1-Nitropropane	4.29E-02	No		14	vapor			3.67E-27	1.57E-28	0.00E+00
29	108-05-4	Vinyl acetate	4.29E-02	No		18	vapor			2.04E-41	8.73E-43	0.00E+00
30	108-10-1	Hexone (4-Methyl-2-pentanone or MIBK)	7.14E-03	No		14	vapor			3.67E-27	2.62E-29	0.00E+00
31	108-20-3	[illegible]	7.14E-03	No		18	vapor			0.00E+00	0.00E+00	0.00E+00
32	108-38-3	m-Xylene (Dimethyl benzene)	7.14E-03	No		19	vapor			6.10E-46	4.36E-48	0.00E+00
33	108-39-4	m-Cresol	7.14E-03	No		8	vapor			0.00E+00	0.00E+00	0.00E+00
34	108-87-2	Methylcyclohexane	7.14E-03	Yes	25	25	vapor	0.00E+00	0.00E+00		0.00E+00	0.00E+00
35	108-88-3	Toluene	2.86E-03	Yes	19	19	vapor	6.38E-51	2.23E-48		6.38E-51	0.00E+00
36	108-90-7	Chlorobenzene	2.86E-03	No		19	vapor			6.10E-46	1.74E-48	0.00E+00
37	108-93-0	Cyclohexanol	7.14E-03	No		10	vapor			1.98E-09	1.41E-11	1.41E-11
38	108-94-1	Cyclohexanone	7.14E-03	No		11	vapor			4.48E-24	3.20E-26	0.00E+00
39	108-95-2	Phenol	4.29E-02	Yes	8	8	vapor	4.48E-34	1.05E-32		4.48E-34	0.00E+00
40	109-66-0	n-Pentane	7.14E-03	No		28	vapor			0.00E+00	0.00E+00	0.00E+00
41	109-99-9	Tetrahydrofuran	2.86E-03	No		13	vapor			8.69E-12	2.48E-14	2.48E-14
42	110-12-3	5-Methyl-2-hexanone	2.86E-03	No		15	vapor			1.02E-40	2.92E-43	0.00E+00
43	110-43-0	2-Heptanone	2.86E-03	No		15	vapor			1.02E-40	2.92E-43	0.00E+00
44	110-54-3	n-Hexane	7.14E-03	Yes	27	27	vapor	0.00E+00	0.00E+00		0.00E+00	0.00E+00
45	110-62-3	n-Valeraldehyde	4.29E-02	No		15	vapor			1.02E-40	4.36E-42	0.00E+00
46	110-82-7	Cyclohexane	7.14E-03	Yes	24	24	vapor	0.00E+00	0.00E+00		0.00E+00	0.00E+00
47	110-83-8	Cyclohexene	2.86E-03	No		22	vapor			2.28E-54	6.52E-57	0.00E+00
48	110-86-1	Pyridine	1.43E-02	No		11	vapor			4.48E-24	6.41E-26	0.00E+00
49	111-65-9	n-Octane	7.14E-03	No		26	vapor			0.00E+00	0.00E+00	0.00E+00
50	111-76-2	Ethylene glycol monobutyl ether	4.29E-02	No		4	vapor			0.00E+00	0.00E+00	0.00E+00
51	111-84-2	n-Nonane	7.14E-03	Yes	26	26	vapor	0.00E+00	0.00E+00		0.00E+00	0.00E+00
52	117-81-7	Bis(2-ethylhexyl)phthalate (DEHP)	4.29E-02	No		30	particle bound			1.85E-08	7.93E-10	7.93E-10
53	117-84-0	n-Dioctyl phthalate	4.29E-02	No		32	particle bound			9.51E-10	4.08E-11	4.08E-11
54	120-12-7	Anthracene	4.29E-02	Yes	13	13	particle bound	7.46E-13	1.74E-11		7.46E-13	7.46E-13
55	120-82-1	1,2,4-Trichlorobenzene	7.14E-03	Yes	17	17	vapor	2.66E-46	3.73E-44		2.66E-46	0.00E+00
56	120-83-2	2,4-Dichlorophenol	4.29E-02	No		10	vapor			1.98E-09	8.48E-11	8.48E-11
57	121-44-8	Triethylamine	7.14E-03	No		15	vapor			1.02E-40	7.30E-43	0.00E+00
58	121-69-7	Dimethylaniline	7.14E-03	No		13	vapor			8.69E-12	6.21E-14	6.21E-14
59	122-39-4	N,N-Diphenylamine	1.43E-02	Yes	10	10	vapor	5.65E-11	3.95E-09		5.65E-11	5.65E-11
60	123-19-3	4-Heptanone	2.86E-03	No		13	vapor			8.69E-12	2.48E-14	2.48E-14
61	123-38-6	n-Propionaldehyde	1.43E-02	No		14	vapor			3.67E-27	5.25E-29	0.00E+00
62	123-51-3	3-Methyl-1-butanol	7.14E-03	No		12	vapor			4.60E-38	3.29E-40	0.00E+00
63	123-86-4	Acetic acid n-butyl ester	1.36E-04	No		18	vapor			2.04E-41	2.78E-45	0.00E+00
64	123-91-1	1,4-Dioxane	1.43E-03	No		10	vapor			1.98E-09	2.83E-12	2.83E-12
65	126-73-8	Tributyl phosphate	2.86E-02	Yes	7	7	particle bound	9.88E-10	3.36E-08		9.88E-10	9.88E-10
66	126-98-7	2-Methyl-2-propenenitrile (Methacrylonitrile)	7.14E-03	No		18	vapor			2.04E-41	1.46E-43	0.00E+00
67	127-18-4	Perchloroethylene (tetrachloroethylene)	2.86E-03	Yes	21	21	vapor	1.25E-56	4.38E-53		1.25E-56	0.00E+00
68	127-19-5	N,N-Dimethylacetamide	7.14E-03	No		8	vapor			0.00E+00	0.00E+00	0.00E+00
69	128-37-0	2,6-Bis(tert-butyl)-4-methylphenol	1.43E-02	No		32	vapor			9.51E-10	1.36E-11	1.36E-11
70	129-00-0	Pyrene	4.29E-02	Yes	33	33	particle bound	2.48E-11	3.71E-10		2.48E-11	2.48E-11
71	1321-64-8	Pentachloronaphthalene	4.29E-02	Yes	14	14	particle bound	0.00E+00	0.00E+00		0.00E+00	0.00E+00
72	1321-65-9	Trichloronaphthalene	4.29E-02	No		14	particle bound			1.02E-40	4.36E-42	0.00E+00
73	132-64-9	Dibenzofuran	4.29E-02	Yes	15	15	particle bound	8.76E-42	3.06E-40		8.76E-42	0.00E+00
74	1335-87-1	Hexachloronaphthalene	4.29E-02	No		14	particle bound			3.67E-27	1.57E-28	0.00E+00
75	1335-88-2	Tetrachloronaphthalene	4.29E-02	No		15	particle bound			1.02E-40	4.36E-42	0.00E+00
76	1336-36-3	Polychlorinated biphenyls (PCBs)	1.74E-03	Yes	35	35	vapor	1.21E-15	6.66E-13		1.21E-15	1.20E-15
77	141-78-6	Acetic acid ethyl ester (Ethyl acetate)	1.36E-04	No		14	vapor			3.67E-27	4.87E-31	0.00E+00
78	141-79-7	4-Methyl-3-penten-2-one	4.29E-02	No		13	vapor			8.69E-12	3.73E-13	3.73E-13
79	142-82-5	n-Heptane	7.14E-03	No		27	vapor			0.00E+00	0.00E+00	0.00E+00
80	144-62-7	Oxalic acid	2.14E+00	Yes	3	3	vapor	7.27E-27	3.38E-27		7.27E-27	0.00E+00
81	156-60-5	trans-1,2-Dichloroethylene	7.14E-03	No		20	vapor			5.60E-51	4.00E-53	0.00E+00
82	1634-04-4	Methyl tert-butyl ether	7.14E-03	No		18	vapor			2.04E-41	1.46E-43	0.00E+00
83	189-55-9	Dibenzo(a,i)pyrene	4.29E-02	No		5	particle			0.00E+00	0.00E+00	0.00E+00
84	189-64-0	Dibenzo(a,h)pyrene	4.29E-02	No		5	particle			0.00E+00	0.00E+00	0.00E+00
85	191-24-2	Benzo(g,h,i)perylene	4.29E-02	No		30	particle bound			1.85E-08	7.93E-10	7.93E-10
86	191-30-0	Dibenzo(a,l)pyrene	4.29E-02	No		5	particle			0.00E+00	0.00E+00	0.00E+00
87	192-65-4	Dibenzo(a,e)pyrene	4.29E-02	No		5	particle			0.00E+00	0.00E+00	0.00E+00
88	193-39-5	Indeno(1,2,3-cd)pyrene	4.29E-02	Yes	30	30	particle	5.98E-15	1.38E-13		5.98E-15	5.98E-15
89	206-44-0	Fluoranthene	4.29E-02	Yes	33	33	particle bound	0.00E+00	0.00E+00		0.00E+00	0.00E+00
90	208-96-8	Acenaphthylene	4.29E-02	Yes	14	14	vapor	3.15E-28	7.34E-27		3.15E-28	0.00E+00
91	2234-13-1	Octachloronaphthalene	1.36E-04	No		14	particle bound			3.67E-27	4.87E-31	0.00E+00
92	224-42-0	Dibenz(a,j)acridine	4.29E-02	No		4	particle bound			4.53E-23	1.94E-24	0.00E+00
93	226-36-8	Dibenz(a,h)acridine	4.29E-02	No		4	particle bound			4.53E-23	1.94E-24	0.00E+00
94	25551-13-7	Trimethyl benzene	7.14E-03	No		19	vapor			6.10E-46	4.36E-48	0.00E+00
95	26140-60-3	Terphenyls	4.29E-02	Yes	34	34	particle bound	0.00E+00	0.00E+00		0.00E+00	0.00E+00
96	27154-33-2	Trichlorofluoroethane	7.14E-03	No		23	vapor			0.00E+00	0.00E+00	0.00E+00
97	287-92-3	Cyclopentane	7.14E-03	No		24	vapor			0.00E+00	0.00E+00	0.00E+00
98	3697-24-3	5-Methylchrysene	4.29E-02	Yes	32	32	particle bound	0.00E+00	0.00E+00		0.00E+00	0.00E+00
99	3825-26-1	Ammonium perfluorooctanoate	4.29E-02	No		14	vapor			3.67E-27	1.57E-28	0.00E+00
100	4170-30-3	2-Butenaldehyde (2-Butenal or Crotonaldehyde)	7.14E-03	Yes	11	11	vapor	0.00E+00	0.00E+00		0.00E+00	0.00E+00
101	50-00-0	Formaldehyde	7.14E-03	No		8	vapor			1.04E-22	7.42E-25	0.00E+00
102	50-32-8	Benzo(a)pyrene	2.72E-02	Yes	30	30	particle bound	1.00E-08	3.70E-08		1.00E-08	1.00E-08
103	53-70-3	Dibenz(a,h)anthracene	2.72E-02	No		7	particle bound			3.36E-08	9.16E-10	9.16E-10
104	540-59-0	1,2-Dichloroethylene	7.14E-03	No		19	vapor			6.10E-46	4.36E-48	0.00E+00
105	540-84-1	2,2,4-Trimethylpentane	7.14E-03	No		26	vapor			0.00E+00	0.00E+00	0.00E+00
106	541-73-1	1,3-Dichlorobenzene	2.86E-03	No		19	vapor			6.10E-46	1.74E-48	0.00E+00
107	56-23-5	Carbon tetrachloride	2.86E-03	Yes	22	22	vapor	6.52E-57	2.28E-54		6.52E-57	0.00E+00
108	563-80-4	3-Methyl-2-butanone	7.14E-03	No		14	vapor			3.67E-27	2.62E-29	0.00E+00
109	56-49-5	3-Methylcholanthrene	4.29E-02	No		26	particle bound			0.00E+00	0.00E+00	0.00E+00
110	57-14-7	1,1-Dimethylhydrazine	4.29E-02	Yes	12	12	vapor	1.97E-36	4.60E-34		1.97E-36	0.00E+00
111	58-90-2	2,3,4,6-Tetrachlorophenol	4.29E-02	Yes	11	11	vapor	1.53E-26	3.57E-24		1.53E-26	0.00E+00
112	591-78-6	2-Hexanone	7.14E-03	No		14	vapor			3.67E-27	2.62E-29	0.00E+00
113	59-50-7	4-Chloro-3-methylphenol	4.29E-02	No		32	vapor			9.51E-10	4.08E-11	4.08E-11
114	59-89-2	N-Nitrosomorpholine	4.29E-02	Yes	6	6	vapor	0.00E+00	0.00E+00		0.00E+00	0.00E+00
115	602-87-9	5-Nitroacenaphthene	4.29E-02	No		9	particle bound			0.00E+00	0.00E+00	0.00E+00
116	60-29-7	Ethyl ether	4.29E-03	No		17	vapor			3.76E-44	1.61E-46	0.00E+00
117	603-34-9	Triphenylamine	4.29E-02	Yes	32	32	vapor	8.15E-11	1.90E-09		8.15E-11	8.15E-11
118	60-34-4	Methylhydrazine	7.14E-03	No		10	vapor			1.98E-09	1.41E-11	1.41E-11
119	60-35-5	Acetamide	7.14E-03	Yes	5	5	vapor	0.00E+00	0.00E+00		0.00E+00	0.00E+00
120	621-64-7	Di-n-Propylnitrosamine (N-Nitroso-di-n-propylamine)	4.29E-02	Yes	10	10	vapor	0.00E+00	0.00E+00	1.98E-09	8.48E-11	8.48E-11
121	624-83-9	Methyl isocyanate	7.14E-03	No		17	vapor			3.76E-44	2.68E-46	0.00E+00
122	627-13-4	Nitric acid, propyl ester	3.57E-03	No		17	vapor			3.76E-44	1.34E-46	0.00E+00
123	62-75-9	N-Nitroso-N,N-dimethylamine (Dimethylnitrosamine)	4.29E-02	Yes	9	9	vapor	0.00E+00	0.00E+00		0.00E+00	0.00E+00
124	630-20-6	1,1,1,2-Tetrachloroethane	7.14E-03	No		18	vapor			0.00E+00	0.00E+00	0.00E+00
125	64-17-5	Ethyl alcohol	7.14E-03	No		10	vapor			1.98E-09	1.41E-11	1.41E-11
126	64-18-6	Formic acid	1.07E+01	No		7	vapor			3.36E-08	3.60E-07	3.60E-07
127	64-19-7	Acetic acid	1.36E+01	Yes	8	8	vapor	0.00E+00	0.00E+00		0.00E+00	0.00E+00
128	67-56-1	Methyl alcohol (Methanol)	7.14E-03	No		10	vapor			1.98E-09	1.41E-11	1.41E-11
129	67-63-0	2-Propyl alcohol (Isopropanol, Propan-2-01)	1.43E-03	No		11	vapor			4.48E-24	6.41E-27	0.00E+00
130	67-64-1	2-Propanone (Acetone)	1.43E-02	No		13	vapor			8.69E-12	1.24E-13	1.24E-13
131	67-66-3	Chloroform	2.86E-03	No		19	vapor			6.10E-46	1.74E-48	0.00E+00
132	67-72-1	Hexachloroethane	4.29E-02	No		19	vapor			6.10E-46	2.61E-47	0.00E+00
133	684-16-2	Hexafluoroacetone	7.14E-03	No		19	vapor			6.10E-46	4.36E-48	0.00E+00
134	71-23-8	n-Propyl alcohol	2.86E-03	No		11	vapor			4.48E-24	1.28E-26	0.00E+00
135	71-36-3	n-Butyl alcohol	7.14E-03	No		11	vapor			4.48E-24	3.20E-26	0.00E+00
136	71-43-2	Benzene	2.86E-03	Yes	19	19	vapor	8.34E-51	2.22E-48		8.34E-51	0.00E+00
137	71-55-6	Methyl chloroform (1,1,1-Trichloroethane)	2.86E-03	No		21	vapor			4.38E-53	1.25E-56	0.00E+00
138	74-83-9	Bromomethane (Methyl bromide)	2.86E-03	No		19	vapor			6.10E-46	1.74E-48	0.00E+00
139	74-87-3	Chloromethane (Methyl chloride)	2.86E-03	No		20	vapor			5.60E-51	1.60E-53	0.00E+00
140	74-97-5	Bromochloromethane	7.14E-03	No		17	vapor			3.76E-44	2.68E-46	0.00E+00
141	74-88-4	[illegible]	4.29E-02	No		20	vapor			5.60E-51	2.40E-52	0.00E+00
142	75-00-3	Chloroethane	2.86E-03	No		20	vapor			5.60E-51	1.60E-53	0.00E+00
143	75-01-4	Vinyl chloride (1-Chloroethene)	2.86E-03	No		22	vapor			2.28E-54	6.52E-57	0.00E+00
144	75-05-8	Acetonitrile	7.14E-03	Yes	13	13	vapor	1.57E-40	2.10E-38		1.57E-40	0.00E+00
145	75-07-0	Acetaldehyde	4.29E-02	No		13	vapor			8.69E-12	3.73E-13	3.73E-13
146	75-09-2	Dichloromethane (Methylene chloride)	2.86E-03	No		19	vapor			6.10E-46	1.74E-48	0.00E+00
147	75-12-7	Formamide	4.29E-02	Yes	4	4	vapor	1.94E-24	4.53E-23		1.94E-24	0.00E+00
148	75-15-0	Carbon disulfide	7.14E-03	No		20	vapor			5.60E-51	4.00E-53	0.00E+00
149	75-21-8	Ethylene oxide (Oxirane)	1.43E-02	No		15	vapor			1.02E-40	1.46E-42	0.00E+00
150	75-27-4	Bromodichloromethane	7.14E-03	No		16	vapor			0.00E+00	0.00E+00	0.00E+00
151	75-34-3	1,1-Dichloroethane	2.86E-03	No		19	vapor			6.10E-46	1.74E-48	0.00E+00
152	75-35-4	1,1-Dichloroethene (Vinylidene chloride)	7.14E-03	No		22	vapor			2.28E-54	1.63E-56	0.00E+00
153	75-43-4	Dichlorofluoromethane	2.86E-03	No		20	vapor			5.60E-51	1.60E-53	0.00E+00
154	75-45-6	Chlorodifluoromethane	2.86E-03	No		22	vapor			2.28E-54	6.52E-57	0.00E+00
155	75-50-3	Trimethylamine	7.14E-03	No		14	vapor			3.67E-27	2.62E-29	0.00E+00
156	75-52-5	Nitromethane	4.29E-02	No		13	vapor			8.69E-12	3.73E-13	3.73E-13
157	75-56-9	2-Methyloxirane	4.29E-02	No		11	vapor			4.48E-24	1.92E-25	0.00E+00
158	75-61-6	Dibromodifluoromethane	7.14E-03	No		22	vapor			2.28E-54	1.63E-56	0.00E+00
159	75-63-8	Trifluorobromomethane	7.14E-03	No		25	vapor			0.00E+00	0.00E+00	0.00E+00
160	75-65-0	2-Methyl-2-propanol	7.14E-03	No		11	vapor			4.48E-24	3.20E-26	0.00E+00
161	75-69-4	Trichlorofluoromethane	7.14E-03	No		23	vapor			0.00E+00	0.00E+00	0.00E+00
162	75-71-8	Dichlorodifluoromethane	7.14E-03	No		25	vapor			0.00E+00	0.00E+00	0.00E+00
163	76-03-9	Trichloroacetic acid	7.14E-03	No		5	vapor			0.00E+00	0.00E+00	0.00E+00
164	76-11-9	1,1,1,2-Tetrachloro-2,2-difluoroethane	4.29E-02	No		24	vapor			0.00E+00	0.00E+00	0.00E+00
165	76-12-0	1,1,2,2-Tetrachloro-1,2-difluoroethane	4.29E-02	No		23	vapor			0.00E+00	0.00E+00	0.00E+00
166	76-13-1	1,2,2-Trichloro-1,1,2-trifluoroethane (Freon 113)	7.14E-03	No		24	vapor			0.00E+00	0.00E+00	0.00E+00
167	76-14-2	1,2-Dichloro-1,1,2,2-tetrafluoroethane	7.14E-03	No		25	vapor			0.00E+00	0.00E+00	0.00E+00
168	76-15-3	Chloropentafluoroethane	7.14E-03	Yes	25	25	vapor	0.00E+00	0.00E+00		0.00E+00	0.00E+00
169	78-83-1	2-Methylpropyl alcohol (Isobutyl alcohol)	4.29E-02	No		11	vapor			4.48E-24	1.92E-25	0.00E+00
170	78-87-5	1,2-Dichloropropane	2.86E-03	No		19	vapor			6.10E-46	1.74E-48	0.00E+00
171	78-92-2	1-Methylpropyl alcohol (2-Butanol)	2.86E-03	No		11	vapor			4.48E-24	1.28E-26	0.00E+00
172	78-93-3	Methyl ethyl ketone (MEK, 2-Butanone)	7.14E-03	No		13	vapor			8.69E-12	6.21E-14	6.21E-14
173	79-00-5	1,1,2-Trichloroethane	7.14E-03	No		17	vapor			3.76E-44	2.68E-46	0.00E+00
174	79-01-6	Trichloroethylene	7.14E-03	Yes	20	20	vapor	7.47E-53	1.05E-50		7.47E-53	0.00E+00
175	79-09-4	Propionic acid	4.29E-02	No		8	vapor			1.04E-22	4.45E-24	0.00E+00
176	79-10-7	2-Propenoic acid	6.72E-03	No		8	vapor			1.04E-22	6.64E-25	0.00E+00
177	79-20-9	Methyl acetate	4.29E-02	No		14	vapor			3.67E-27	1.57E-28	0.00E+00
178	79-34-5	1,1,2,2-Tetrachloroethane	1.36E-04	No		18	vapor			2.04E-41	2.78E-45	0.00E+00
179	83-32-9	Acenaphthene	4.29E-02	Yes	15	15	vapor	0.00E+00	0.00E+00		0.00E+00	0.00E+00
180	84-66-2	Diethyl phthalate	4.29E-02	Yes	6	6	vapor	4.29E-24	9.84E-23		4.29E-24	0.00E+00
181	84-74-2	Dibutyl phthalate	4.29E-02	Yes	31	31	particle bound	4.43E-10	1.03E-08		4.43E-10	4.43E-10
182	85-01-8	Phenanthrene	4.29E-02	No		13	particle bound			8.69E-12	3.73E-13	3.73E-13
183	85-68-7	Butylbenzyl phthalate	4.29E-02	No		31	particle bound			1.03E-08	4.43E-10	4.43E-10
184	86-73-7	Fluorene	4.29E-02	No		14	vapor			3.67E-27	1.57E-28	0.00E+00
185	87-68-3	Hexachlorobutadiene	7.14E-03	Yes	20	20	vapor	5.34E-54	7.47E-53		5.34E-54	0.00E+00
186	88-06-2	2,4,6-Trichlorophenol	4.29E-02	No		10	vapor			1.98E-09	8.48E-11	8.48E-11
187	88-72-2	2-Nitrotoluene	7.14E-03	No		12	vapor			4.60E-38	3.29E-40	0.00E+00
188	88-75-5	2-Nitrophenol	4.29E-02	No		12	vapor			4.60E-38	1.97E-39	0.00E+00
189	88-89-1	Picric acid	4.29E-02	Yes	2	2	[illegible]	0.00E+00	0.00E+00		0.00E+00	0.00E+00
190	91-20-3	Naphthalene	1.43E-02	Yes	18	18	vapor	2.14E-44	1.49E-41		2.14E-44	0.00E+00
191	91-22-5	Quinoline	4.29E-02	No		8	vapor			0.00E+00	0.00E+00	0.00E+00
192	91-58-7	2-Chloronaphthalene	4.29E-02	No		18	vapor			2.04E-41	8.73E-43	0.00E+00
193	92-52-4	1,1'-Biphenyl	2.86E-02	No		18	vapor			2.04E-41	5.83E-43	0.00E+00
194	92-69-3	4-Phenylphenol	4.29E-02	No		10	particle bound			1.98E-09	8.48E-11	8.48E-11
195	95-13-6	Indene	4.29E-02	No		9	vapor			0.00E+00	0.00E+00	0.00E+00
196	95-47-6	o-Xylene	2.86E-03	No		19	vapor			6.10E-46	1.74E-48	0.00E+00
197	95-48-7	o-Cresol (2-Methylphenol)	7.14E-03	No		8	vapor			0.00E+00	0.00E+00	0.00E+00
198	95-49-8	2-Chlorotoluene	4.29E-02	No		19	vapor			6.10E-46	2.61E-47	0.00E+00
199	95-50-1	o-Dichlorobenzene (1,2-Dichlorobenzene)	2.86E-03	Yes	18	18	vapor	0.00E+00	0.00E+00		0.00E+00	0.00E+00
200	95-57-8	2-Chlorophenol	4.29E-02	No		11	vapor			4.48E-24	1.92E-25	0.00E+00
201	95-95-4	2,4,5-Trichlorophenol	4.29E-02	No		9	vapor			0.00E+00	0.00E+00	0.00E+00
202	96-22-0	3-Pentanone	1.43E-02	No		14	vapor			3.67E-27	5.25E-29	0.00E+00
203	96-69-5	Bis(3-tert-butyl-4-hydroxy-6-methylphenyl)sulfide	4.29E-02	No		19	vapor			6.10E-46	2.61E-47	0.00E+00
204	98-06-6	tert-Butylbenzene	4.29E-02	No		21	vapor			4.38E-53	1.88E-54	0.00E+00
205	98-82-8	Cumene	4.29E-02	No		20	vapor			5.60E-51	2.40E-52	0.00E+00
206	98-83-9	alpha-Methylstyrene	7.14E-03	No		19	vapor			6.10E-46	4.36E-48	0.00E+00
207	98-86-2	Acetophenone	2.86E-02	Yes	11	11	vapor	2.62E-26	9.49E-24		2.62E-26	0.00E+00
208	98-95-3	Nitrobenzene	2.86E-02	No		12	vapor			4.60E-38	1.31E-39	0.00E+00
209											3.73E-07	

Adjusted Performance Factors

Group	PF
1	3.34E-08
2	0.00E+00
3	3.38E-27
4	4.53E-23
5	0.00E+00
6	0.00E+00
7	3.36E-08
8	0.00E+00
9	0.00E+00
10	1.98E-09
11	4.48E-24
12	4.60E-38
13	8.69E-12
14	3.67E-27
15	1.02E-40
16	2.04E-41
17	3.76E-44
18	0.00E+00
19	6.10E-46
20	5.60E-51
21	4.38E-53
22	2.28E-54
23	0.00E+00
24	0.00E+00
25	0.00E+00
26	0.00E+00
27	0.00E+00
28	0.00E+00
29	0.00E+00
30	1.85E-08
31	1.03E-08
32	9.51E-10
33	2.88E-10
34	0.00E+00
35	6.66E-13

Coplanar PCBs

CAS #	Compound	PJV32 g/sec	Corrected PJV32 g/sec
31508-00-6	2,3',4,4',5-Pentachlorobiphenyl (PBC 118)	8.62E-18	0.00E+00
32598-13-3	3,3',4,4'-Tetrachlorobiphenyl (TCB)	8.62E-19	0.00E+00
32598-14-4	2,3,3',4,4'-Pentachlorobiphenyl (PCB 105)	8.62E-19	0.00E+00
32774-16-6	3,3',4,4',5,5'-Hexachlorobiphenyl	8.62E-19	0.00E+00
35065-29-3	2,2',3,4,4',5,5'-Heptachlorobiphenyl	8.62E-19	0.00E+00
35065-30-6	2,2',3,3',4,4',5-Heptachlorobiphenyl	8.62E-19	0.00E+00
38380-08-4	2,3,3',4,4',5-Hexachlorobiphenyl (PCB 157)	8.62E-19	0.00E+00
39635-31-9	2,3,3',4,4',5,5'-Heptachlorobiphenyl	8.62E-19	0.00E+00
52663-72-6	2,3',4,4',5,5'-Hexachlorobiphenyl	8.62E-19	0.00E+00
57465-28-8	3,3',4,4',5-Pentachlorobiphenyl	8.62E-19	0.00E+00
65510-44-3	2',3,4,4',5-Pentachlorobiphenyl	8.62E-19	0.00E+00
69782-90-7	2,3,3',4,4',5'-Hexachlorobiphenyl	8.62E-19	0.00E+00
70362-50-4	3,4,4',5-Tetrachlorobiphenyl	8.62E-19	0.00E+00
74472-37-0	2,3,4,4',5-Pentachlorobiphenyl	8.62E-19	0.00E+00
1336-36-3	Polychlorinated biphenyls (PCBs)	1.20E-15	
1336-36-3	UnCorrected (for coplanar PCBs)	1.21E-15	

Correction for Coplanar PCBs
0.99 as parent
0.01 as coplanar sum

	A	B	C	D	E	F	G	H	I	J	K
1	Table B-13 PJV34 - Abated HLW PJM/RFD					Fraction		PJV34	PJV34		Corrected
2			PJV32		Fv	vapor	Fraction	g/sec	g/sec	PJV34	PJV34
3	CAS #	COPC	g/sec	Phase		adjusted	particle	vapor	particle	g/sec	g/sec
4	100-00-5	p-Nitrochlorobenzene	5.85E-11	vapor	1.000	1.000	0.000	5.85E-11	0.00E+00	5.85E-11	5.85E-11
5	100-21-0	p-Phthalic acid	1.43E-08	vapor	1.000	1.000	0.000	1.43E-08	0.00E+00	1.43E-08	1.43E-08
6	100-41-4	Ethyl benzene	0.00E+00	vapor	1.000	1.000	0.000	0.00E+00	0.00E+00	0.00E+00	0.00E+00
7	100-42-5	Styrene	0.00E+00	vapor	1.000	1.000	0.000	0.00E+00	0.00E+00	0.00E+00	0.00E+00
8	10061-01-5	cis-1,3-Dichloropropene	0.00E+00	vapor	1.000	1.000	0.000	0.00E+00	0.00E+00	0.00E+00	0.00E+00
9	10061-02-6	trans-1,3-Dichloropropene	0.00E+00	vapor	1.000	1.000	0.000	0.00E+00	0.00E+00	0.00E+00	0.00E+00
10	101-55-3	4-Bromophenylphenyl ether	0.00E+00	vapor	1.000	1.000	0.000	0.00E+00	0.00E+00	0.00E+00	0.00E+00
11	101-84-8	Diphenyl ether	0.00E+00	vapor	1.000	1.000	0.000	0.00E+00	0.00E+00	0.00E+00	0.00E+00
12	106-35-4	3-Heptanone	0.00E+00	vapor	1.000	1.000	0.000	0.00E+00	0.00E+00	0.00E+00	0.00E+00
13	106-42-3	p-Xylene (Dimethyl benzene)	0.00E+00	vapor	1.000	1.000	0.000	0.00E+00	0.00E+00	0.00E+00	0.00E+00
14	106-46-7	1,4-Dichlorobenzene	0.00E+00	vapor	1.000	1.000	0.000	0.00E+00	0.00E+00	0.00E+00	0.00E+00
15	106-88-7	1,2-Epoxybutane	0.00E+00	vapor	1.000	1.000	0.000	0.00E+00	0.00E+00	0.00E+00	0.00E+00
16	106-93-4	Ethylene dibromide (Dibromoethane)	0.00E+00	vapor	1.000	1.000	0.000	0.00E+00	0.00E+00	0.00E+00	0.00E+00
17	106-97-8	Butane	0.00E+00	vapor	1.000	1.000	0.000	0.00E+00	0.00E+00	0.00E+00	0.00E+00
18	106-99-0	1,3-Butadiene	0.00E+00	vapor	1.000	1.000	0.000	0.00E+00	0.00E+00	0.00E+00	0.00E+00
19	107-02-8	Acrolein	0.00E+00	vapor	1.000	1.000	0.000	0.00E+00	0.00E+00	0.00E+00	0.00E+00
20	107-05-1	3-Chloropropene (Allyl chloride)	0.00E+00	vapor	1.000	1.000	0.000	0.00E+00	0.00E+00	0.00E+00	0.00E+00
21	107-06-2	1,2-Dichloroethane (Ethylene chloride)	0.00E+00	vapor	1.000	1.000	0.000	0.00E+00	0.00E+00	0.00E+00	0.00E+00
22	107-12-0	Propionitrile	6.21E-14	vapor	1.000	1.000	0.000	6.21E-14	0.00E+00	6.21E-14	6.21E-14
23	107-13-1	Acrylonitrile	0.00E+00	vapor	1.000	1.000	0.000	0.00E+00	0.00E+00	0.00E+00	0.00E+00
24	107-18-6	2-Propene-1-ol	8.48E-11	vapor	1.000	1.000	0.000	8.48E-11	0.00E+00	8.48E-11	8.48E-11
25	107-31-3	Formic acid, methyl ester	0.00E+00	vapor	1.000	1.000	0.000	0.00E+00	0.00E+00	0.00E+00	0.00E+00
26	107-66-4	Dibutylphosphate	0.00E+00	particle bound	0.985	0.985	0.015	0.00E+00	0.00E+00	0.00E+00	0.00E+00
27	107-87-9	2-Pentanone	0.00E+00	vapor	1.000	1.000	0.000	0.00E+00	0.00E+00	0.00E+00	0.00E+00
28	108-03-2	1-Nitropropane	0.00E+00	vapor	1.000	1.000	0.000	0.00E+00	0.00E+00	0.00E+00	0.00E+00
29	108-05-4	Vinyl acetate	0.00E+00	vapor	1.000	1.000	0.000	0.00E+00	0.00E+00	0.00E+00	0.00E+00
30	108-10-1	Hexone (4-Methyl-2-pentanone or MIBK)	0.00E+00	vapor	1.000	1.000	0.000	0.00E+00	0.00E+00	0.00E+00	0.00E+00
31	108-20-3	Bis(isopropyl)ether	0.00E+00	vapor	1.000	1.000	0.000	0.00E+00	0.00E+00	0.00E+00	0.00E+00
32	108-38-3	m-Xylene (Dimethyl benzene)	0.00E+00	vapor	1.000	1.000	0.000	0.00E+00	0.00E+00	0.00E+00	0.00E+00
33	108-39-4	m-Cresol	0.00E+00	vapor	1.000	1.000	0.000	0.00E+00	0.00E+00	0.00E+00	0.00E+00
34	108-87-2	Methylcyclohexane	0.00E+00	vapor	1.000	1.000	0.000	0.00E+00	0.00E+00	0.00E+00	0.00E+00
35	108-88-3	Toluene	0.00E+00	vapor	1.000	1.000	0.000	0.00E+00	0.00E+00	0.00E+00	0.00E+00
36	108-90-7	Chlorobenzene	0.00E+00	vapor	1.000	1.000	0.000	0.00E+00	0.00E+00	0.00E+00	0.00E+00
37	108-93-0	Cyclohexanol	1.41E-11	vapor	1.000	1.000	0.000	1.41E-11	0.00E+00	1.41E-11	1.41E-11
38	108-94-1	Cyclohexanone	0.00E+00	vapor	1.000	1.000	0.000	0.00E+00	0.00E+00	0.00E+00	0.00E+00
39	108-95-2	Phenol	0.00E+00	vapor	1.000	1.000	0.000	0.00E+00	0.00E+00	0.00E+00	0.00E+00
40	109-66-0	n-Pentane	0.00E+00	vapor	1.000	1.000	0.000	0.00E+00	0.00E+00	0.00E+00	0.00E+00
41	109-99-9	Tetrahydrofuran	2.48E-14	vapor	1.000	1.000	0.000	2.48E-14	0.00E+00	2.48E-14	2.48E-14
42	110-12-3	5-Methyl-2-hexanone	0.00E+00	vapor	1.000	1.000	0.000	0.00E+00	0.00E+00	0.00E+00	0.00E+00
43	110-43-0	2-Heptanone	0.00E+00	vapor	1.000	1.000	0.000	0.00E+00	0.00E+00	0.00E+00	0.00E+00
44	110-54-3	n-Hexane	0.00E+00	vapor	1.000	1.000	0.000	0.00E+00	0.00E+00	0.00E+00	0.00E+00
45	110-62-3	n-Valeraldehyde	0.00E+00	vapor	1.000	1.000	0.000	0.00E+00	0.00E+00	0.00E+00	0.00E+00
46	110-82-7	Cyclohexane	0.00E+00	vapor	1.000	1.000	0.000	0.00E+00	0.00E+00	0.00E+00	0.00E+00
47	110-83-8	Cyclohexene	0.00E+00	vapor	1.000	1.000	0.000	0.00E+00	0.00E+00	0.00E+00	0.00E+00
48	110-86-1	Pyridine	0.00E+00	vapor	1.000	1.000	0.000	0.00E+00	0.00E+00	0.00E+00	0.00E+00
49	111-65-9	n-Octane	0.00E+00	vapor	1.000	1.000	0.000	0.00E+00	0.00E+00	0.00E+00	0.00E+00
50	111-76-2	Ethylene glycol monobutyl ether	0.00E+00	vapor	1.000	1.000	0.000	0.00E+00	0.00E+00	0.00E+00	0.00E+00
51	111-84-2	n-Nonane	0.00E+00	vapor	1.000	1.000	0.000	0.00E+00	0.00E+00	0.00E+00	0.00E+00
52	117-81-7	Bis(2-ethylhexyl)phthalate (DEHP)	7.93E-10	particle bound	0.130	0.130	0.870	1.03E-10	3.45E-15	1.03E-10	1.03E-10
53	117-84-0	n-Dioctyl phthalate	4.08E-11	particle bound	0.852	0.852	0.148	3.47E-11	3.02E-17	3.47E-11	3.47E-11
54	120-12-7	Anthracene	7.45E-13	particle bound	0.998	0.998	0.002	7.44E-13	7.45E-21	7.44E-13	7.44E-13
55	120-82-1	1,2,4-Trichlorobenzene	0.00E+00	vapor	1.000	1.000	0.000	0.00E+00	0.00E+00	0.00E+00	0.00E+00
56	120-83-2	2,4-Dichlorophenol	8.48E-11	vapor	1.000	1.000	0.000	8.48E-11	0.00E+00	8.48E-11	8.48E-11
57	121-44-8	Triethylamine	0.00E+00	vapor	1.000	1.000	0.000	0.00E+00	0.00E+00	0.00E+00	0.00E+00
58	121-69-7	Dimethylaniline	6.21E-14	vapor	1.000	1.000	0.000	6.21E-14	0.00E+00	6.21E-14	6.21E-14
59	122-39-4	N,N-Diphenylamine	5.65E-11	vapor	1.000	1.000	0.000	5.65E-11	0.00E+00	5.65E-11	5.65E-11
60	123-19-3	4-Heptanone	2.48E-14	vapor	1.000	1.000	0.000	2.48E-14	0.00E+00	2.48E-14	2.48E-14
61	123-38-6	n-Propionaldehyde	0.00E+00	vapor	1.000	1.000	0.000	0.00E+00	0.00E+00	0.00E+00	0.00E+00
62	123-51-3	3-Methyl-1-butanol	0.00E+00	vapor	1.000	1.000	0.000	0.00E+00	0.00E+00	0.00E+00	0.00E+00
63	123-86-4	Acetic acid n-butyl ester	0.00E+00	vapor	1.000	1.000	0.000	0.00E+00	0.00E+00	0.00E+00	0.00E+00
64	123-91-1	1,4-Dioxane	2.83E-12	vapor	1.000	1.000	0.000	2.83E-12	0.00E+00	2.83E-12	2.83E-12
65	126-73-8	Tributyl phosphate	8.65E-10	particle bound	0.996	0.996	0.004	8.62E-10	1.93E-17	8.62E-10	8.62E-10
66	126-98-7	2-Methyl-2-propenenitrile (Methacrylonitrile)	0.00E+00	vapor	1.000	1.000	0.000	0.00E+00	0.00E+00	0.00E+00	0.00E+00
67	127-18-4	Perchloroethylene (tetrachloroethylene)	0.00E+00	vapor	1.000	1.000	0.000	0.00E+00	0.00E+00	0.00E+00	0.00E+00
68	127-19-5	N,N-Dimethylacetamide	0.00E+00	vapor	1.000	1.000	0.000	0.00E+00	0.00E+00	0.00E+00	0.00E+00
69	128-37-0	2,6-Bis(tert-butyl)-4-methylphenol	1.36E-11	vapor	1.000	1.000	0.000	1.36E-11	0.00E+00	1.36E-11	1.36E-11
70	129-00-0	Pyrene	2.45E-11	particle bound	0.994	0.994	0.006	2.43E-11	7.34E-19	2.43E-11	2.43E-11
71	1321-64-8	Pentachloronaphthalene	0.00E+00	particle bound	0.971	0.971	0.029	0.00E+00	0.00E+00	0.00E+00	0.00E+00
72	1321-65-9	Trichloronaphthalene	0.00E+00	particle bound	0.999	0.999	0.001	0.00E+00	0.00E+00	0.00E+00	0.00E+00
73	132-64-9	Dibenzofuran	0.00E+00	particle bound	0.999	0.999	0.001	0.00E+00	0.00E+00	0.00E+00	0.00E+00
74	1335-87-1	Hexachloronaphthalene	0.00E+00	particle bound	0.984	0.984	0.016	0.00E+00	0.00E+00	0.00E+00	0.00E+00
75	1335-88-2	Tetrachloronaphthalene	0.00E+00	particle bound	0.991	0.991	0.009	0.00E+00	0.00E+00	0.00E+00	0.00E+00
76	1336-36-3	Polychlorinated biphenyls (PCBs)	1.20E-15	vapor	1.000	1.000	0.000	1.20E-15	0.00E+00	1.20E-15	1.20E-15
77	141-78-6	Acetic acid ethyl ester (Ethyl acetate)	0.00E+00	vapor	1.000	1.000	0.000	0.00E+00	0.00E+00	0.00E+00	0.00E+00
78	141-79-7	4-Methyl-3-penten-2-one	3.73E-13	vapor	1.000	1.000	0.000	3.73E-13	0.00E+00	3.73E-13	3.73E-13
79	142-82-5	n-Heptane	0.00E+00	vapor	1.000	1.000	0.000	0.00E+00	0.00E+00	0.00E+00	0.00E+00
80	144-62-7	Oxalic acid	0.00E+00	vapor	1.000	1.000	0.000	0.00E+00	0.00E+00	0.00E+00	0.00E+00
81	156-60-5	trans-1,2-Dichloroethylene	0.00E+00	vapor	1.000	1.000	0.000	0.00E+00	0.00E+00	0.00E+00	0.00E+00
82	1634-04-4	Methyl tert-butyl ether	0.00E+00	vapor	1.000	1.000	0.000	0.00E+00	0.00E+00	0.00E+00	0.00E+00
83	189-55-9	Dibenzo[a,i]pyrene	0.00E+00	particle	0.000	0.000	1.000	0.00E+00	0.00E+00	0.00E+00	0.00E+00
84	189-64-0	Dibenzo[a,h]pyrene	0.00E+00	particle	0.000	0.000	1.000	0.00E+00	0.00E+00	0.00E+00	0.00E+00
85	191-24-2	Benzo[g,h,i]perylene	7.93E-10	particle bound	0.065	0.065	0.935	5.15E-11	3.71E-15	5.15E-11	5.15E-11
86	191-30-0	Benzo[a,l]pyrene	0.00E+00	particle	0.000	0.000	1.000	0.00E+00	0.00E+00	0.00E+00	0.00E+00
87	192-65-4	Dibenzo[a,e]pyrene	0.00E+00	particle	0.000	0.000	1.000	0.00E+00	0.00E+00	0.00E+00	0.00E+00
88	193-39-5	Indeno(1,2,3-cd)pyrene	5.88E-15	particle	0.000	0.000	1.000	0.00E+00	2.88E-20	2.88E-20	0.00E+00
89	206-44-0	Fluoranthene	0.00E+00	particle bound	0.992	0.992	0.008	0.00E+00	0.00E+00	0.00E+00	0.00E+00
90	208-96-8	Acenaphthylene	0.00E+00	vapor	1.000	1.000	0.000	0.00E+00	0.00E+00	0.00E+00	0.00E+00
91	2234-13-1	Octachloronaphthalene	0.00E+00	particle bound	0.629	0.629	0.371	0.00E+00	0.00E+00	0.00E+00	0.00E+00
92	224-42-0	Dibenz[a,j]acridine	0.00E+00	particle bound	0.241	0.241	0.759	0.00E+00	0.00E+00	0.00E+00	0.00E+00
93	226-36-8	Dibenz[a,h]acridine	0.00E+00	particle bound	0.285	0.285	0.715	0.00E+00	0.00E+00	0.00E+00	0.00E+00
94	25551-13-7	Trimethyl benzene	0.00E+00	vapor	1.000	1.000	0.000	0.00E+00	0.00E+00	0.00E+00	0.00E+00
95	26140-60-3	Terphenyls	0.00E+00	particle bound	0.872	0.872	0.128	0.00E+00	0.00E+00	0.00E+00	0.00E+00
96	27154-33-2	Trichlorofluoroethane	0.00E+00	vapor	1.000	1.000	0.000	0.00E+00	0.00E+00	0.00E+00	0.00E+00
97	287-92-3	Cyclopentane	0.00E+00	vapor	1.000	1.000	0.000	0.00E+00	0.00E+00	0.00E+00	0.00E+00
98	3697-24-3	5-Methylchrysene	0.00E+00	particle bound	0.823	0.823	0.177	0.00E+00	0.00E+00	0.00E+00	0.00E+00
99	3825-26-1	Ammonium perfluorooctanoate	0.00E+00	vapor	1.000	1.000	0.000	0.00E+00	0.00E+00	0.00E+00	0.00E+00
100	4170-30-3	2-Butenaldehyde (2-Butenal or Crotonaldehyde)	0.00E+00	vapor	1.000	1.000	0.000	0.00E+00	0.00E+00	0.00E+00	0.00E+00
101	50-00-0	Formaldehyde	0.00E+00	vapor	1.000	1.000	0.000	0.00E+00	0.00E+00	0.00E+00	0.00E+00
102	50-32-8	Benzo(a)pyrene	1.00E-09	particle bound	0.290	0.290	0.710	2.91E-10	3.57E-15	2.91E-10	2.91E-10
103	53-70-3	Dibenzo(a,h)anthracene	9.18E-10	particle bound	0.054	0.054	0.946	4.96E-11	4.34E-15	4.96E-11	4.96E-11
104	540-59-0	1,2-Dichloroethylene	0.00E+00	vapor	1.000	1.000	0.000	0.00E+00	0.00E+00	0.00E+00	0.00E+00
105	540-84-1	2,2,4-Trimethylpentane	0.00E+00	vapor	1.000	1.000	0.000	0.00E+00	0.00E+00	0.00E+00	0.00E+00
106	541-73-1	1,3-Dichlorobenzene	0.00E+00	vapor	1.000	1.000	0.000	0.00E+00	0.00E+00	0.00E+00	0.00E+00
107	56-23-5	Carbon tetrachloride	0.00E+00	vapor	1.000	1.000	0.000	0.00E+00	0.00E+00	0.00E+00	0.00E+00
108	563-80-4	3-Methyl-2-butanone	0.00E+00	vapor	1.000	1.000	0.000	0.00E+00	0.00E+00	0.00E+00	0.00E+00
109	56-49-5	3-Methylcholanthrene	0.00E+00	particle bound	0.364	0.364	0.636	0.00E+00	0.00E+00	0.00E+00	0.00E+00
110	57-14-7	1,1-Dimethylhydrazine	0.00E+00	vapor	1.000	1.000	0.000	0.00E+00	0.00E+00	0.00E+00	0.00E+00
111	58-90-2	2,3,4,6-Tetrachlorophenol	0.00E+00	vapor	1.000	1.000	0.000	0.00E+00	0.00E+00	0.00E+00	0.00E+00
112	591-78-6	2-Hexanone	0.00E+00	vapor	1.000	1.000	0.000	0.00E+00	0.00E+00	0.00E+00	0.00E+00
113	59-50-7	4-Chloro-3-methylphenol	4.08E-11	vapor	1.000	1.000	0.000	4.08E-11	0.00E+00	4.08E-11	4.08E-11
114	59-89-2	N-Nitrosomorpholine	0.00E+00	vapor	1.000	1.000	0.000	0.00E+00	0.00E+00	0.00E+00	0.00E+00
115	602-87-9	5-Nitroacenaphthene	0.00E+00	particle bound	0.997	0.997	0.003	0.00E+00	0.00E+00	0.00E+00	0.00E+00
116	60-29-7	Ethyl ether	0.00E+00	vapor	1.000	1.000	0.000	0.00E+00	0.00E+00	0.00E+00	0.00E+00
117	603-34-9	Triphenylamine	8.15E-11	vapor	1.000	1.000	0.000	8.15E-11	0.00E+00	8.15E-11	8.15E-11
118	60-34-4	Methylhydrazine	1.41E-11	vapor	1.000	1.000	0.000	1.41E-11	0.00E+00	1.41E-11	1.41E-11
119	60-35-5	Acetamide	0.00E+00	vapor	1.000	1.000	0.000	0.00E+00	0.00E+00	0.00E+00	0.00E+00
120	621-64-7	Di-n-Propylnitrosamine (N-Nitroso-di-n-propylamine)	8.48E-11	vapor	1.000	1.000	0.000	8.48E-11	0.00E+00	8.48E-11	8.48E-11
121	624-83-9	Methyl isocyanate	0.00E+00	vapor	1.000	1.000	0.000	0.00E+00	0.00E+00	0.00E+00	0.00E+00
122	627-13-4	Nitric acid, propyl ester	0.00E+00	vapor	1.000	1.000	0.000	0.00E+00	0.00E+00	0.00E+00	0.00E+00
123	62-75-9	N-Nitroso-N,N-dimethylamine (Dimethylnitrosamine)	0.00E+00	vapor	1.000	1.000	0.000	0.00E+00	0.00E+00	0.00E+00	0.00E+00
124	630-20-6	1,1,1,2-Tetrachloroethane	0.00E+00	vapor	1.000	1.000	0.000	0.00E+00	0.00E+00	0.00E+00	0.00E+00
125	64-17-5	Ethyl alcohol	1.41E-11	vapor	1.000	1.000	0.000	1.41E-11	0.00E+00	1.41E-11	1.41E-11
126	64-18-6	Formic acid	3.82E-07	vapor	1.000	1.000	0.000	3.82E-07	0.00E+00	3.82E-07	3.82E-07
127	64-19-7	Acetic acid	0.00E+00	vapor	1.000	1.000	0.000	0.00E+00	0.00E+00	0.00E+00	0.00E+00
128	67-56-1	Methyl alcohol (Methanol)	1.41E-11	vapor	1.000	1.000	0.000	1.41E-11	0.00E+00	1.41E-11	1.41E-11
129	67-63-0	2-Propyl alcohol (Isopropanol; Propan-2-01)	0.00E+00	vapor	1.000	1.000	0.000	0.00E+00	0.00E+00	0.00E+00	0.00E+00
130	67-64-1	2-Propanone (Acetone)	1.24E-13	vapor	1.000	1.000	0.000	1.24E-13	0.00E+00	1.24E-13	1.24E-13
131	67-66-3	Chloroform	0.00E+00	vapor	1.000	1.000	0.000	0.00E+00	0.00E+00	0.00E+00	0.00E+00
132	67-72-1	Hexachloroethane	0.00E+00	vapor	1.000	1.000	0.000	0.00E+00	0.00E+00	0.00E+00	0.00E+00
133	684-16-2	Hexafluoroacetone	0.00E+00	vapor	1.000	1.000	0.000	0.00E+00	0.00E+00	0.00E+00	0.00E+00
134	71-23-8	n-Propyl alcohol	0.00E+00	vapor	1.000	1.000	0.000	0.00E+00	0.00E+00	0.00E+00	0.00E+00
135	71-36-3	n-Butyl alcohol	0.00E+00	vapor	1.000	1.000	0.000	0.00E+00	0.00E+00	0.00E+00	0.00E+00
136	71-43-2	Benzene	0.00E+00	vapor	1.000	1.000	0.000	0.00E+00	0.00E+00	0.00E+00	0.00E+00
137	71-55-6	Methyl chloroform (1,1,1-Trichloroethane)	0.00E+00	vapor	1.000	1.000	0.000	0.00E+00	0.00E+00	0.00E+00	0.00E+00
138	74-83-9	Bromomethane (Methyl bromide)	0.00E+00	vapor	1.000	1.000	0.000	0.00E+00	0.00E+00	0.00E+00	0.00E+00
139	74-87-3	Chloromethane (Methyl chloride)	0.00E+00	vapor	1.000	1.000	0.000	0.00E+00	0.00E+00	0.00E+00	0.00E+00
140	74-97-5	Bromochloromethane	0.00E+00	vapor	1.000	1.000	0.000	0.00E+00	0.00E+00	0.00E+00	0.00E+00
141	74-99-7	Methylacetylene	0.00E+00	vapor	1.000	1.000	0.000	0.00E+00	0.00E+00	0.00E+00	0.00E+00
142	75-00-3	Chloroethane	0.00E+00	vapor	1.000	1.000	0.000	0.00E+00	0.00E+00	0.00E+00	0.00E+00
143	75-01-4	Vinyl chloride (1-Chloroethene)	0.00E+00	vapor	1.000	1.000	0.000	0.00E+00	0.00E+00	0.00E+00	0.00E+00
144	75-05-8	Acetonitrile	0.00E+00	vapor	1.000	1.000	0.000	0.00E+00	0.00E+00	0.00E+00	0.00E+00
145	75-07-0	Acetaldehyde	3.73E-13	vapor	1.000	1.000	0.000	3.73E-13	0.00E+00	3.73E-13	3.73E-13
146	75-09-2	Dichloromethane (Methylene chloride)	0.00E+00	vapor	1.000	1.000	0.000	0.00E+00	0.00E+00	0.00E+00	0.00E+00
147	75-12-7	Formamide	0.00E+00	vapor	1.000	1.000	0.000	0.00E+00	0.00E+00	0.00E+00	0.00E+00
148	75-15-0	Carbon disulfide	0.00E+00	vapor	1.000	1.000	0.000	0.00E+00	0.00E+00	0.00E+00	0.00E+00
149	75-21-8	Ethylene oxide (Oxirane)	0.00E+00	vapor	1.000	1.000	0.000	0.00E+00	0.00E+00	0.00E+00	0.00E+00
150	75-27-4	Bromodichloromethane	0.00E+00	vapor	1.000	1.000	0.000	0.00E+00	0.00E+00	0.00E+00	0.00E+00
151	75-34-3	1,1-Dichloroethane	0.00E+00	vapor	1.000	1.000	0.000	0.00E+00	0.00E+00	0.00E+00	0.00E+00
152	75-35-4	1,1-Dichloroethene (Vinylidene chloride)	0.00E+00	vapor	1.000	1.000	0.000	0.00E+00	0.00E+00	0.00E+00	0.00E+00
153	75-43-4	Dichlorofluoromethane	0.00E+00	vapor	1.000	1.000	0.000	0.00E+00	0.00E+00	0.00E+00	0.00E+00
154	75-45-6	Chlorodifluoromethane	0.00E+00	vapor	1.000	1.000	0.000	0.00E+00	0.00E+00	0.00E+00	0.00E+00
155	75-50-3	Trimethylamine	0.00E+00	vapor	1.000	1.000	0.000	0.00E+00	0.00E+00	0.00E+00	0.00E+00
156	75-52-5	Nitromethane	3.73E-13	vapor	1.000	1.000	0.000	3.73E-13	0.00E+00	3.73E-13	3.73E-13
157	75-55-8	2-Methylaziridine	0.00E+00	vapor	1.000	1.000	0.000	0.00E+00	0.00E+00	0.00E+00	0.00E+00
158	75-61-6	Difluorodibromomethane	0.00E+00	vapor	1.000	1.000	0.000	0.00E+00	0.00E+00	0.00E+00	0.00E+00
159	75-63-8	Trifluorobromomethane	0.00E+00	vapor	1.000	1.000	0.000	0.00E+00	0.00E+00	0.00E+00	0.00E+00
160	75-65-0	2-Methyl-2-propanol	0.00E+00	vapor	1.000	1.000	0.000	0.00E+00	0.00E+00	0.00E+00	0.00E+00
161	75-69-4	Trichlorofluoromethane	0.00E+00	vapor	1.000	1.000	0.000	0.00E+00	0.00E+00	0.00E+00	0.00E+00
162	75-71-8	Dichlorodifluoromethane	0.00E+00	vapor	1.000	1.000	0.000	0.00E+00	0.00E+00	0.00E+00	0.00E+00
163	76-03-9	Trichloroacetic acid	0.00E+00	vapor	1.000	1.000	0.000	0.00E+00	0.00E+00	0.00E+00	0.00E+00
164	76-11-9	1,1,1,2-Tetrachloro-2,2-difluoroethane	0.00E+00	vapor	1.000	1.000	0.000	0.00E+00	0.00E+00	0.00E+00	0.00E+00
165	76-12-0	1,1,2,2-Tetrachloro-1,2-difluoroethane	0.00E+00	vapor	1.000	1.000	0.000	0.00E+00	0.00E+00	0.00E+00	0.00E+00
166	76-13-1	1,2,2-Trichloro-1,1,2-trifluoroethane (Freon 113)	0.00E+00	vapor	1.000	1.000	0.000	0.00E+00	0.00E+00	0.00E+00	0.00E+00
167	76-14-2	1,2-Dichloro-1,1,2,2-tetrafluoroethane	0.00E+00	vapor	1.000	1.000	0.000	0.00E+00	0.00E+00	0.00E+00	0.00E+00
168	76-15-3	Chloropentafluoroethane	0.00E+00	vapor	1.000	1.000	0.000	0.00E+00	0.00E+00	0.00E+00	0.00E+00
169	78-83-1	2-Methylpropyl alcohol (Isobutyl alcohol)	0.00E+00	vapor	1.000	1.000	0.000	0.00E+00	0.00E+00	0.00E+00	0.00E+00
170	78-87-5	1,2-Dichloropropane	0.00E+00	vapor	1.000	1.000	0.000	0.00E+00	0.00E+00	0.00E+00	0.00E+00
171	78-92-2	1-Methylpropyl alcohol (2-Butanol)	0.00E+00	vapor	1.000	1.000	0.000	0.00E+00	0.00E+00	0.00E+00	0.00E+00
172	78-93-3	Methyl ethyl ketone (MEK, 2-Butanone)	6.21E-14	vapor	1.000	1.000	0.000	6.21E-14	0.00E+00	6.21E-14	6.21E-14
173	79-00-5	1,1,2-Trichloroethane	0.00E+00	vapor	1.000	1.000	0.000	0.00E+00	0.00E+00	0.00E+00	0.00E+00
174	79-01-6	Trichloroethylene	0.00E+00	vapor	1.000	1.000	0.000	0.00E+00	0.00E+00	0.00E+00	0.00E+00
175	79-09-4	Propionic acid	0.00E+00	vapor	1.000	1.000	0.000	0.00E+00	0.00E+00	0.00E+00	0.00E+00
176	79-10-7	2-Propenoic acid	0.00E+00	vapor	1.000	1.000	0.000	0.00E+00	0.00E+00	0.00E+00	0.00E+00
177	79-20-9	Methyl acetate	0.00E+00	vapor	1.000	1.000	0.000	0.00E+00	0.00E+00	0.00E+00	0.00E+00
178	79-34-5	1,1,2,2-Tetrachloroethane	0.00E+00	vapor	1.000	1.000	0.000	0.00E+00	0.00E+00	0.00E+00	0.00E+00

M	N	O	P
Coplanar PCBs		PJV34 g/sec	Corrected PJV34 g/sec
31508-00-6	2,3',4,4',5-Pentachlorobiphenyl (PBC 118)	8.82E-19	0.00E+00
32598-13-3	3,3',4,4'-Tetrachlorobiphenyl (TCB)	8.82E-19	0.00E+00
32598-14-4	2,3,3',4,4'-Pentachlorobiphenyl (PCB 105)	8.82E-19	0.00E+00
32774-16-6	3,3',4,4',5,5'-Hexachlorobiphenyl	8.82E-19	0.00E+00
35065-29-3	2,2',3,4,4',5,5'-Heptachlorobiphenyl	8.82E-19	0.00E+00
35065-30-6	2,2',3,3',4,4',5-Heptachlorobiphenyl	8.82E-19	0.00E+00
38380-08-4	2,3,3',4,4',5-Hexachlorobiphenyl (PCB 157)	8.82E-19	0.00E+00
39635-31-9	2,3,3',4,4',5,5'-Heptachlorobiphenyl	8.82E-19	0.00E+00
52663-72-6	2,3',4,4',5,5'-Hexachlorobiphenyl	8.82E-19	0.00E+00
57465-28-8	3,3',4,4',5-Pentachlorobiphenyl	8.82E-19	0.00E+00
65510-44-3	2',3,4,4',5-Pentachlorobiphenyl	8.82E-19	0.00E+00
69782-90-7	2,3,3',4,4',5'-Hexachlorobiphenyl	8.82E-19	0.00E+00
70362-50-4	3,4,4',5-Tetrachlorobiphenyl	8.82E-19	0.00E+00
74472-37-0	2,3,4,4',5-Pentachlorobiphenyl	8.82E-19	0.00E+00
1336-36-3	Polychlorinated biphenyls (PCBs)	1.20E-15	
1336-36-3	UnCorrected (for coplanar PCBs)	1.21E-15	

Correction for Coplanar PCBs
0.99 as parent
0.01 as coplanar sum

General DFs

	HEPA 1	HEPA 2	Total
Vapor	1	1	1
Particle	2000	100	200,000

CALCULATION SHEET

BY: E. Banks
DATE: 01/24/03

PROJECT: WTP
JOB NO.: 24590
CALC NO.: 24590-WTP-M4C-FEP-00201
SHEET REV. C
SHEET NO. B-19

	A	B	C	D	E	F	G	H	I	J	K	L	M	N	O	P	Q	R	S
1	Table B-03 PJV34 - Abated HLW					Precious		PJV34	PJV34		Corrected								
2			PJV34		PV	vapor	Fraction	g/sec	g/sec	PJV34	PJV34								
3	CAS #	COPC	g/sec	Phase		adjusted	particle	vapor	particle	g/sec	g/sec					Corrected			
111	83-32-9	Acenaphthene	0.00E+00	vapor	1.000	1.000	0.000	0.00E+00	0.00E+00	0.00E+00	0.00E+00								
112	84-66-2	Diethyl phthalate	0.00E+00	vapor	1.000	1.000	0.000	0.00E+00	0.00E+00	0.00E+00	0.00E+00								
113	84-74-2	Dibutyl phthalate	4.43E-10	particle bound	0.994	0.994	0.006	4.41E-10	1.33E-11	4.41E-10	4.41E-10								
114	86-01-8	Phenanthrene	3.72E-13	particle bound	0.999	0.999	0.001	3.72E-13	1.86E-21	3.72E-13	3.72E-13								
115	85-68-7	Butylbenzyl phthalate	4.43E-10	particle bound	0.948	0.948	0.052	4.20E-10	1.15E-10	4.20E-10	4.20E-10								
116	86-73-7	Fluorene	0.00E+00	vapor	1.000	1.000	0.000	0.00E+00	0.00E+00	0.00E+00	0.00E+00								
117	87-68-3	Hexachlorobutadiene	0.00E+00	vapor	1.000	1.000	0.000	0.00E+00	0.00E+00	0.00E+00	0.00E+00								
118	88-06-2	2,4,6-Trichlorophenol	8.48E-11	vapor	1.000	1.000	0.000	8.48E-11	0.00E+00	8.48E-11	8.48E-11								
119	88-72-2	2-Nitrotoluene	0.00E+00	vapor	1.000	1.000	0.000	0.00E+00	0.00E+00	0.00E+00	0.00E+00								
120	88-75-5	2-Nitrophenol	0.00E+00	vapor	1.000	1.000	0.000	0.00E+00	0.00E+00	0.00E+00	0.00E+00								
121	88-89-1	Picric acid	0.00E+00	gas/s	0.934	0.934	0.066	0.00E+00	0.00E+00	0.00E+00	0.00E+00								
122	91-20-3	Naphthalene	0.00E+00	vapor	1.000	1.000	0.000	0.00E+00	0.00E+00	0.00E+00	0.00E+00								
123	91-22-5	Quinoline	0.00E+00	vapor	1.000	1.000	0.000	0.00E+00	0.00E+00	0.00E+00	0.00E+00								
124	91-58-7	2-Chloronaphthalene	0.00E+00	vapor	1.000	1.000	0.000	0.00E+00	0.00E+00	0.00E+00	0.00E+00								
125	92-52-4	1,1'-Biphenyl	0.00E+00	vapor	1.000	1.000	0.000	0.00E+00	0.00E+00	0.00E+00	0.00E+00								
126	92-93-3	4-Nitrobiphenyl	8.48E-11	particle bound	0.999	0.999	0.001	8.47E-11	4.24E-19	8.47E-11	8.47E-11								
127	99-15-0	Indene	0.00E+00	vapor	1.000	1.000	0.000	0.00E+00	0.00E+00	0.00E+00	0.00E+00								
128	95-47-6	p-Xylene	0.00E+00	vapor	1.000	1.000	0.000	0.00E+00	0.00E+00	0.00E+00	0.00E+00								
129	95-48-7	o-Cresol (2-Methylphenol)	0.00E+00	vapor	1.000	1.000	0.000	0.00E+00	0.00E+00	0.00E+00	0.00E+00								
130	91-58-7	2-Chloronaphthalene	0.00E+00	vapor	1.000	1.000	0.000	0.00E+00	0.00E+00	0.00E+00	0.00E+00								
131	95-50-1	o-Dichlorobenzene (1,2-Dichlorobenzene)	0.00E+00	vapor	1.000	1.000	0.000	0.00E+00	0.00E+00	0.00E+00	0.00E+00								
132	95-57-8	2-Chlorophenol	0.00E+00	vapor	1.000	1.000	0.000	0.00E+00	0.00E+00	0.00E+00	0.00E+00								
133	95-95-4	2,4,5-Trichlorophenol	0.00E+00	vapor	1.000	1.000	0.000	0.00E+00	0.00E+00	0.00E+00	0.00E+00								
134	98-22-0	3-Pentanone	0.00E+00	vapor	1.000	1.000	0.000	0.00E+00	0.00E+00	0.00E+00	0.00E+00								
135	98-49-1	(Bis(3-tert-butyl-4-hydroxy-5-methyl-phenyl)sulfide	0.00E+00	vapor	1.000	1.000	0.000	0.00E+00	0.00E+00	0.00E+00	0.00E+00								
136	98-51-1	p-tert-Butylbenzene	0.00E+00	vapor	1.000	1.000	0.000	0.00E+00	0.00E+00	0.00E+00	0.00E+00								
137	98-82-8	Cumene	0.00E+00	vapor	1.000	1.000	0.000	0.00E+00	0.00E+00	0.00E+00	0.00E+00								
138	98-83-9	alpha-Methylstyrene	0.00E+00	vapor	1.000	1.000	0.000	0.00E+00	0.00E+00	0.00E+00	0.00E+00								
139	98-86-2	Acetophenone	0.00E+00	vapor	1.000	1.000	0.000	0.00E+00	0.00E+00	0.00E+00	0.00E+00								
140	99-65-0	Nitrobenzene	0.00E+00	vapor	1.000	1.000	0.000	0.00E+00	0.00E+00	0.00E+00	0.00E+00								
141										3.87E-07									

Appendix C

Calculation: Integrated Emissions Baseline Report Non-modeled Inorganic and Radionuclide Constituents Air Emission Rates Estimation

24590-WTP-M4C-FRP-00003, Rev D

This page intentionally left blank.

R10661300

Calculation Cover Sheet

ISSUED BY
RPP-WTP PDC

RIVER PROTECTION PROJECT-WASTE TREATMENT PLANT		JOB NO.: 24590	
CALC NO. 24590-WTP-M4C-FRP-00003	GROUP Process Eng.		FACILITY Central
SUBJECT Integrated Emissions Baseline Report Non-Modeled Inorganic and Radionuclide Constituents Air Emission Rates Estimation			
CALCULATION STATUS DESIGNATION	☒ PRELIMINARY ☐ SUPERSEDED BY:	☐ COMMITTED	☐ CONFIRMED ☐ CANCELLED
SOFTWARE APPLICATIONS ☒ N/A			
QAS: ☐ YES ☐ NO	PROGRAM NAME:		VERSION/RELEASE NO.:

RECORD OF REVISIONS

NO.	REASON FOR REVISION	TOTAL NO. OF SHEETS	LAST SHEET NO.	ORIGINATOR	CHECKED	APPROVED/ ACCEPTED	DATE
A	Initial Issue	69	69	E. Berrios	J. Cook/C. Nguyen	O. Block	03/13/03
B	Revision to incorporate new emissions profile	76	D-16	E. Berrios	J. Cook/C. Leung	O. Block	12/12/03
C	Revision to support 2005 Rad NOC Permit Update	86	D-16	E. Berrios	D. Blumenkranz	S. Saunders	01/12/05
D	Revision to incorporate new air emissions profile	91	D-16	E. Berrios EB	D. Blumenkranz DB	S. Saunders SEA	01/05/06

Notes/Comments

Calculations were performed on a Compaq Personal Computer using the software Microsoft Excel® 2000.

This calculation does not affect any structures, systems, components, or services of the WTP.

This revision of the calculation is a complete rewrite, therefore no revision bars are used.

Contents

1 Objective 3
2 Inputs 3
3 Background 7
4 Applicable Codes and Standards 7
5 Methodology 7
6 Assumptions 10
7 Calculations 10
8 Results and Conclusions 18
9 References 20
10 Attachments 20
Attachment A - Summary Radioactive Properties for Selected Radionuclides A-1
Attachment B – Periodic Table of the Elements B-1
Attachment C - Steady State Flowsheet Model Stream Reports C-1
Attachment D - Calculations D-1

List of Tables

Table C-1 FRP01 Stream Report C-2
Table C-2 FRP14 Stream Report C-4
Table C-3 PJV04 Stream Report C-6
Table C-4 HFP01 Stream Report C-8
Table C-5 HFP03 Stream Report C-10
Table C-6 HLP09 Stream Report C-12
Table C-7 HMP06 Stream Report C-14
Table C-8 HOP10 Stream Report C-16
Table C-9 HOP31 Stream Report C-18
Table C-10 LCP01 Stream Report C-20
Table C-11 LFP01 Stream Report C-22
Table C-12 LFP04 Stream Report C-24

Table C-13 LFP06 Stream Report C-26

Table C-14 LMP06 Stream Report C-28

Table C-15 LVP01 Stream Report C-30

Table C-16 LVP18 Stream Report C-32

Table C-17 PJV11 Stream Report C-34

Table C-18 PJV32 Stream Report C-36

Table C-19 PJV34 Stream Report C-38

Table C-20 PVP01 Stream Report C-40

Table C-21 PVP12 Stream Report C-42

Table C-22 RLD32 Stream Report C-44

Table C-23 RLD33 Stream Report C-46

Table C-24 RLD34 Stream Report C-48

Table D-1 - Feed Rate Calculation D-2

Table D-2 - PJV04 Calculation D-3

Table D-3 - PVP01 Calculation D-4

Table D-4 - LFP04 Calculation D-5

Table D-5 - LMP06 Calculation D-6

Table D-6 - LVP01 Calculation D-7

Table D-7 - HFP03 Calculation D-8

Table D-8 - HMP06 Calculation D-9

Table D-9 - HOP10 Calculation D-10

Table D-10 - PJV32 Calculation D-11

Table D-11 - PVP12 Calculation D-12

Table D-12 - PJV11 Calculation D-13

Table D-13 - LVP18 Calculation D-14

Table D-14 - HOP31 Calculation D-15

Table D-15 - PJV34 Calculation D-16

1 Objective

The objective of this calculation is to estimate the Waste Treatment Plant (WTP) emission rates of inorganic and radionuclide constituents that are not modeled in the Steady-State Flowsheet Model (SSFM) with the results of compounds that are modeled in the SSFM. The results from this calculation will be reported in the next revision of the *Integrated Emissions Baseline Report for the Hanford Tank Waste Treatment and Immobilization Plant* (24590-WTP-RPT-PO-03-008).

2 Inputs

- Emission estimates for the non-modeled compounds are based on the results from their representative compounds as determined in 24590-WTP-RPT-PO-03-008 Section 5.2. Rhodium (Rh) is a newly tracked constituent therefore is being deleted from this calculation. A summary of the non-modeled compounds and their representative constituents is presented below. This information is based on Table 5 of 24590-WTP-RPT-PO-03-008 (next revision of this document will reflect the deletion of Rh as a non-modeled constituent).

Representative Compounds for Inorganics and Radionuclides

Compound	Representative Compound	Compound	Representative Compound
Be	Zr+4	134Cs	137Cs
CN	PO4-3	137mBa	137Cs
Co	60Co	226Ra	Zr+4
Mo	Bi+3	227Ac	Zr+4
Sb	125Sb	228Ra	Zr+4
Se	F-	229Th	232Th
Sn	126Sn	231Pa	Zr+4
Ta	Zr+4	232U	233U
Tl	F-	59Ni	63Ni
U	234U	79Se	F-
V	Bi+3	90Y	90Sr
W	Zr+4	93Zr	Zr+4
Y	90Sr	93mNb	Zr+4
106Ru	F-	242Cm	243Cm
113mCd	Cd+2	-	-

- Feed concentration for nonradioactive Tin (Sn) is the same as the feed concentration for its radioactive counterpart, ^{126}Sn. Conversion factor for Ci to kg for radioactive Sn is: 29 Ci Sn/kg Sn (see Attachment A from http://www.ead.anl.gov/pub/doc/Tbl2RadProp.pdf). Feed concentration for 126Sn is 4.03E-06 Ci/mol Na for LAW and 1.82E-04 Ci/mol Na for HLW (24590-WTP-M4C-FRP-00001, Section 8). Conversion factor from Bq to Ci is 3.7E+10 Bq/Ci (Perry's, 1984, Table 1-4).
- Non-modeled constituents feed concentrations are specified in the *Updated Emissions Run Feed Vector* (24590-WTP-M4C-FRP-00001, Rev. 0A, Section 8), which can be found in Appendix D of 24590-WTP-RPT-PO-03-008. A summary of these feed concentrations is presented below.

Non-Modeled Compounds Feed Concentrations

Analyte	LAW	HLW
	mol/mol Na	mol/mol Na
Be	1.56E-05	2.60E-04
CN	1.66E-05	7.10E-05
Co	1.28E-05	8.18E-05
Mo	6.45E-05	6.86E-05
Sb	1.27E-05	2.06E-05
Se	3.36E-05	5.48E-05
Ta	1.13E-06	8.92E-04
Tl	9.13E-06	2.41E-05
U	5.23E-05	1.09E-02
V	2.02E-05	8.16E-05
W	9.80E-06	1.72E-04
Y	2.19E-05	1.98E-04
	Bq/mol Na	Bq/mol Na
106Ru	1.17E+05	7.02E+05
113mCd	1.81E+05	5.31E+06
134Cs	1.96E+06	1.69E+06
137mBa	6.52E+09	4.80E+09
226Ra	3.48E-01	7.07E+00
227Ac	2.71E+01	2.77E+04
228Ra	4.13E+02	2.03E+04
229Th	1.36E+01	7.58E+03
231Pa	2.85E+02	2.33E+03
232U	3.60E+01	3.10E+04
59Ni	9.55E+04	4.13E+05
79Se	4.60E+03	7.18E+04
90Y	3.74E+08	7.57E+10
93Zr	2.66E+05	2.86E+06
93mNb	1.64E+05	1.55E+06
242Cm	1.05E+04	3.40E+05

- Streams analyzed in this calculation are FRP01, FRP14, PJV04, LFP04, PVP01, HFP03, LCP01, LFP01, LMP06, LVP01, HMP06, HOP10, PJV32, PJV34, PVP12, PJV11, LVP18, HOP31, HLP09 (for glass former stream Zr+4 amount), and HFP01 (for glass former stream Zr+4 amount). Attachment C shows the stream reports for these streams. For stream LVP01, which is the LAW Vessel Vents, the total mass flow through this stream is the summation of streams LFP06, RLD34, RLD33, and RLD32.
- Feed stream to Pretreatment is based on a minimum sodium molarity of less than 5 (i.e., <5 mol Na /l) as with this condition, the feed is treated through the feed evaporator as specified in Section 6 of the *Basis of Design* (24590-WTP-DB-ENG-01-001). The molarity used for air emissions purposes is 4 M Na.
- Molecular weights (Perry's, 1984)

Analyte	MW g/mol	Analyte	MW g/mol
Be	9.0	113mCd	113
CN	26.0	134Cs	134
Co	58.9	137mBa	137
F	19.0	226Ra	226
Mo	95.9	227Ac	227
Sb	121.7	228Ra	228
Se	78.9	229Th	229
Sn	118.7	231Pa	231
Ta	180.9	232U	232
Tl	204.3	59Ni	59
U	238.0	79Se	79
V	50.9	90Y	90
W	183.8	93Zr	93
Y	88.9	93mNb	93
106Ru	106	242Cm	242

- The DFs used for each non-modeled constituent for the Pretreatment PVV system, the Pretreatment PJV system, LAW LMP, LOP, and LVP systems, and the HLW HMP, HOP, and PJV systems are used to calculate the final stack air emission rates. All DFs are the particulate DFs for each system as all these constituents are expected to be particles in the offgas systems. The DFs are presented below. When only one DF is given for a particular unit operation, it means that all constituents have the same DF.
  - Pretreatment Vessel Vent (PVV) (24590-WTP-RPT-PO-03-008)
    - Caustic scrubber: 3.5
    - HEME: 200
    - HEPA: 200,000
    - Thermal Oxidizer: 1
    - Carbon Bed: 1
  - Pretreatment Pulse-jet system (PJV) (24590-WTP-RPT-PO-03-008)
    - Demister: 5
    - HEPA: 200,000
  - LAW melter and primary offgas system (LMP/LOP) (CCN 128548)

Analyte	LAW Melter DF	LAW SBS DF	LAW WESP DF
Be	200	40	11
CN	40	6.5	20
Co	200	3.2	20
Mo	80	8.7	480
Sb	80	3.7	12
Se	1.7	8.4	100
Sn	200	40	11
Ta	250	73	50
Tl	6	73	100
U	200	40	11
V	80	5	860
W	250	73	50

Analyte	LAW Melter DF	LAW SBS DF	LAW WESP DF
Y	100	40	11
106Ru	3.9	3.6	4
113mCd	10	1.6	80
134Cs	2	2.4	30
137mBa	2	2.4	30
226Ra	6	73	50
227Ac	1,370	73	50
228Ra	6	73	50
229Th	250	73	50
231Pa	1,370	73	50
232U	200	40	11
59Ni	89	5.9	20
79Se	1.7	8	100
90Y	100	40	11
93Zr	300	17	10
93mNb	1,000	73	50
242Cm	200	40	11

- LAW secondary offgas system (LVP) (24590-WTP-RPT-PO-03-008)
  - HEPA: 200,000
  - Sulfur impregnated carbon bed: 1
  - SCO: 1
  - SCR: 1
  - Caustic scrubber: 1
- HLW melter and primary offgas system (HMP/HOP) (CCN 128548)

Analyte	HLW Melter DF	HLW SBS DF	HLW WESP DF	HLW HEME DF
Be	130	40	11	90
CN	40	18.1	20	90
Co	130	3.2	20	100
Mo	64.6	8.7	200	490
Sb	100	3.7	12	90
Se	2.1	5.9	200	490
Sn	130	40	11	90
Ta	130	427	20	470
Tl	130	427	20	470
U	130	40	11	90
V	130	4.6	370	500
W	130	427	20	470
Y	100	40	11	90
106Ru	3.9	3.6	20	90
113mCd	10	1.6	80	110
134Cs	26.6	2.4	30	100

Analyte	HLW Melter DF	HLW SBS DF	HLW WESP DF	HLW HEME DF
137mBa	26.6	2.4	30	100
226Ra	130	427	20	470
227Ac	130	427	20	470
228Ra	130	427	20	470
229Th	130	427	20	470
231Pa	130	427	20	470
232U	130	40	11	90
59Ni	76.2	5.9	20	90
79Se	2.1	5.9	200	490
90Y	100	40	11	90
93Zr	81	30	10	90
93mNb	130	427	20	470
242Cm	130	40	11	90

- HLW secondary offgas system (HOP) (24590-WTP-RPT-PO-03-008)
  - HEPA: 200,000
  - Sulfur impregnated carbon bed: 1
  - Silver mordenite: 1
  - SCO: 1
  - SCR: 1
- A tolerance of 1.00E-15 is applied to all the values calculated at any point in this calculation (i.e. 1.00E-15 g/sec for inorganic constituents and 1.00E-15 Ci/d or Ci/yr for radionuclide constituents). If any value calculated is below this tolerance it is considered to be zero. This tolerance point was agreed upon by E&NS and Process Engineering. It is considered adequate as mass rates and rad rates below this range are difficult to measure and/or detect.

3 Background

The *Integrated Emissions Baseline Report for the Hanford Tank Waste Treatment and Immobilization Plant* (24590-WTP-RPT-PO-03-008) estimated air emissions from the Hanford Tank Waste Treatment and Immobilization Plant (WTP) by using the SSFM. Not all reported emissions constituents were calculated by using the SSFM as inclusion of all the constituents would increase the complexity of the model. Instead, constituents were separated into groups and representatives from each group were selected and actually tracked in the SSFM. This calculation generates the estimated air emissions for the constituents not tracked in the SSFM.

4 Applicable Codes and Standards

NA

5 Methodology

The following methodology was used to estimate the emissions for the constituents not modeled in the SSFM.

- HLW and LAW feed concentrations in mol/mol Na (for inorganics) and Bq/mol Na (for radionuclides) for the non-represented compounds in the supernate and solids were obtained from Section 8 of the *Updated Emissions Run Feed Vector* (24590-WTP-M4C-FRP-00001, Rev. 0A) which can be found in Appendix D of 24590-WTP-RPT-PO-03-008. These are presented in Section 2, 3rd bullet.
- LAW and HLW feed streams conditions to Pretreatment (Streams # FRP01 and FRP14) were obtained from the model run request titled *2005 Air Emissions Profile* (24590-WTP-MRQ-PO-05-0049). These are presented in Attachment C. As LAW feed is also introduced through the HLW feed stream (supernatant part of the stream), the total LAW feed rate was calculated by adding the FRP01 feed rate with the FRP14 feed rate. HLW solids feed rate is based on the amount of solids in the feed stream FRP14. As the volumetric flowrate given in the FRP14 stream report only represents the supernate (i.e. LAW feed), the HLW solids feed rate needs to be estimated the following way:
  - The wt% solids in the stream was calculated by dividing the total solids mass rate by the total stream mass rate.
  - This wt% value was applied to the stream density to obtain an estimated corrected density for the stream. For example, if the reported stream density was 1.24 g/cm^3 and the wt% solids in the stream was 10%, then the corrected stream density would be:
    1.24 g/cm^3 / (1 - 0.10) = 1.38 g/cm^3
  - The solids density is then calculated using the following formula:
    $$\rho_{stream} = \rho_{liquids} \times wt\%_{liquids} + \rho_{solids} \times wt\%_{solids}$$
    Solving for solids density gives,
    $$\rho_{solids} = \frac{\rho_{stream} - \rho_{liquids} \times wt\%_{liquids}}{wt\%_{solids}}$$
    Therefore, for the example above, it would be:
    $$\rho_{solids} = \frac{1.38\frac{g}{cm^3} - 1.24\frac{g}{cm^3} \times (1-0.10)}{0.10} = 2.64\frac{g}{cm^3}$$
  As HLW and LAW feeds are mixed together in Pretreatment, when the performance factor of representative constituents is calculated, the total feed rate for the constituent (HLW + LAW feed rates) was used.
- Non-modeled constituents feed rates were calculated based on stream volumetric flowrate (in liters/hr), their feed concentration (in mol/mol Na or Bq/mol Na), and feed sodium molarity. Feed rates in the supernate and solids phase were added together to obtain the total feed rate to the plant (streams # FRP01 and FRP14).
- Feed rates were converted to lb/day for inorganics and Ci/day for radionuclides (streams # FRP01 and FRP14).
- Per Section 5.4 of 24590-WTP-RPT-PO-03-008, the emission rates for compounds not estimated using the SSFM are based on the emission rate of a representative analyzed compound that is chemically or physically similar. This is achieved by using a performance factor (PF) of the representative compound calculated by the following equation:

$$\text{PF} = \frac{\text{mass/rad rate at waste feed [representative compound]}}{\text{mass/rad rate at point of interest [representative compound]}}$$

The "mass/rad rate at the point of interest" refers to the mass/rad rate of a representative compound at various points in the process train, such as at the plant stack or the unabated emission to each offgas treatment unit. The "mass/rad rate at waste feed" refers to the mass/rad rate of each representative compound in the SSFM analyzed waste feed. The mass/rad rate for the waste feed in the above equation is the sum of HLW (stream FRP14) and LAW (stream FRP01) feed rates for the compound. Since the non-modeled constituents are

assumed to behave identically as their modeled representative constituent, the calculated PF is assumed to be the same for the non-modeled constituents. For example, the Be emission rate at any point analyzed in the WTP flowsheet would be estimated by the following equation:

$$Mass_{Be@POI} = Mass_{Be_{Feed(LAW+HLW)}} \div \frac{Mass_{Zr\ Feed(LAW+HLW)}}{Mass_{Zr\ @POI}} = \frac{Mass_{Be_{Feed}(LAW+HLW)}}{PF_{Zr@POI}}$$

Where POI = point of interest (i.e. melter feed, stack, etc)

- Once the PF was calculated, it was applied to the feed rate for the non-modeled constituent in order to obtain the mass flowrate of the constituent at that stream. This process was applied to the following streams:
  - PJV04 - PT PJV unabated stream
  - LFP04 - LAW melter feed
  - PVP01 - PT VV unabated stream
  - HFP03 - HLW melter feed
  - LMP06 - unabated LAW melter offgas
  - LVP01 - unabated LAW vessel vents (LFP06 + RLD34 + RLD33 + RLD32)
  - HMP06 - unabated HLW melter offgas
  - HOP10 - unabated HLW vessel vents

  All these streams represent the unabated offgas streams for the WTP.
- For the LAW melter feed stream (LFP04) a correction factor to any constituents represented with Zr+4 had to be applied. This was necessary as Zr+4 is added as a glass former in the LAW glass former feed stream (LFP01). This amount is higher than the actual Zr+4 in the stream thus if a correction factor is not applied, the emission rates for the non-represented constituents would be over estimated. This correction factor was calculated by dividing the Zr+4 mass rate in the LAW CRV outlet (LCP01) by the summation of the Zr+4 mass rate in the LAW CRV outlet (LCP01) plus the Zr+4 mass rate in the GFC addition (LFP01):
  Zr+4 correction factor = (LCP01)/(LCP01 + LFP01)
  This correction factor was then multiplied by the Zr+4 mass rate at the evaluated stream to obtain the feed related Zr+4 portion. Constituents affected by this correction factor are Be, Ta, W, 226Ra, 227Ac, 228Ra, 231Pa, 93Zr, 93mNb. For example, if the stream conditions for Zr+4 were the following:
  LCP01: 10 lb/day
  LFP01: 100 lb/day
  LFP04: LCP01 + LFP01 = 10 lb/day + 100 lb/day = 110 lb/day
  The correction factor, as specified above, for Zr+4 would then be:
  (10 lb/day) / (10 lb/day + 100 lb/day) = 0.091
  The Be mass rate at this point would then be calculated as stated in bullet #8 above. If, for example, this number was 1 lb/day, then the Be rate would be corrected to:
  1 lb/day * 0.091 = 0.091 lb/day
- The same Zr+4 correction applies to the HLW streams. The affected streams are the HLW MFPV feed stream (HLP09) and the HLW glass former addition stream (HFP01). The Zr+4 correction factor for HLW is:
  Zr+4 correction factor = (HLP09)/(HLP09 + HFP01)
- The air emission rates for the abated streams (PVP12, PJV34, PJV11, LVP18, and HOP31) was calculated by taking the unabated air emission rate and dividing it by the overall system DF for the constituent. For example, if a constituent on the unabated stream PVP01 had a mass rate of 10 g/sec, then the stack emission rate (at stream PVP12) would be:
  PT VV System DFs (from Section 2):
  Caustic Scrubber: 3.5
  HEME: 200
  HEPA: 200,000
  Thermal Oxidizer: 1

Carbon bed: 1
Overall DF: 3.5 x 200 x 200,000 x 1 x 1 = 1.40E+08
Stack rate: 10 g/sec ÷ 1.40E+08 = 7.14E-08 g/sec

- In the HLW and LAW facilities, there is generation of offgas in the melter (HMP06 and LMP06 respectively), which is eventually mixed with the vessel vents in the primary offgas system. Thus, for the vitrification plants, the estimation of inorganic and radionuclide constituents generation from the melter was calculated by applying the melter DFs to the streams HFP03 and LFP04. Once these were calculated the corresponding primary offgas system DFs were applied (SBS and WESP for both LAW and HLW) to obtain the treated offgas amount after the primary offgas system. After this point, the vessel vent values were added (LVP01 and HOP10) to obtain the offgas amount at the exit of the primary offgas system. From then on, the specific DFs were applied to this rate for all unit operations found from the mixing point to the stack to obtain the final stack emission rate.

6 Assumptions

Assumptions Not Requiring Verification

- Representative constituents are chemically or physically similar to the non-modeled constituents. Therefore, the mass or radioactivity rate of the two remains proportionally constant throughout the WTP flowsheet.
- This calculation is a preliminary calculation and will remain as such, as it is only used to estimate air emission rates for permitting purposes. Supporting permitting calculations are used as input to this calculation and they will also remain in the preliminary status, as confirmation is not required. This calculation will need to be revised when:
    - The *Updated Emissions Run Feed Vector* (24590-WTP-M4C-FRP-00001) calculation is updated, and/or:
    - When a new emissions profile is generated to evaluate changes in the WTP flowsheet caused by Research and Technology tests data, vendor information, or design evolution.

7 Calculations

Calculations were performed using the Microsoft Excel® 2000 spreadsheet on a Compaq PC workstation. For illustration purposes, the calculation for one inorganic (Be) and one radionuclide (^{106}Ru) is shown below. No other constituent calculations are shown, as the calculation process is the same. Calculations are shown for most of the analyzed streams. Attachment D shows the calculation for the rest of the constituents.

The general calculation setup is as follows. Fifteen spreadsheets were created, each used to calculate the emission rates from a specific stream and one that calculates the initial feed rate for all the non-modeled constituents. The 'Initial Feed' spreadsheet (Table D-1) uses the feed concentration inputs as a starting point (mol/mol Na or Bq/mol Na), and converts them to a flowrate in mol/h or Bq/h (column F for LAW, column N for HLW) based on the total feed volumetric flowrates for streams FRP01 and FRP14. Then the amount of non-radioactive Sn is calculated using the conversion factors provided in Section 2 (bullet #2) to convert the amount of 126Sn, in Bq/mol Na, to units of mol/mol Na to represent non-radioactive Sn (Cells A35 through F43). This quantity is used in the appropriate cells as the corresponding mol rate, in mol/mol Na, for non-radioactive Sn (column C for LAW, column I for HLW). Subsequent spreadsheets sum the flowrates for streams FRP01 and FRP14 from this spreadsheet's columns F and N and convert it to units of lb/d or Ci/d.

The first stream emission rate calculation is stream PJV04 and can be found in the spreadsheet titled 'UnFRP01-PJV04' (Table D-2). This spreadsheet uses a vertical lookup function to input the appropriate representative

constituent stream feed rate, in lb/d or Ci/d, from the stream reports that correspond to streams FRP01 and FRP14 (Tables C-1 and C-2), and sums the contribution of each stream to compute a total feed rate in lb/d or Ci/d (column G). This quantity is then used as an input in subsequent unabated stream-specific spreadsheets, and corresponds to $Mass_{Rfeed}$ where "R" is the representative constituent.

Spreadsheet 'UnFRP01-PJV04' (Table D-2) and subsequent spreadsheets that calculate unabated streams emissions (Tables D-3 through D-10 except D-5 and D-8) use a vertical lookup function to input the appropriate representative constituent feed rate, in lb/d or Ci/d, from the stream reports (Tables C-3 through C-19) that correspond to the stream of interest (column I), and divides this quantity into the total feed rate (column G) to compute the appropriate PF (column J). This PF (in column J) is then divided into the feed rate (initial flowrate) (column D) of the constituent of interest to compute the constituent mass rate for the stream of interest, converted to units of g/sec, or left in units of Ci/d. This value is then compared to the tolerance value, which states that if the value is less than 1.00E-15, then the value is changed to zero. This condition is applied in the last column of every spreadsheet. At this point, for the radionuclide constituents, the units are changed to Ci/yr by multiplying the calculated value in Ci/d by 365 days per year.

Spreadsheets 'UnFRP01-LMP06' (Table D-5) and 'UnFRP01-HMP06' (Table D-8) air emissions are calculated by obtaining the LFP04 and HFP03 mass/rad rate and dividing the values by the melter DF. The LFP04 and HFP03 values are imported into column B of the 'UnFRP01-LMP06' and 'UnFRP01-HMP06' spreadsheets. The DFs specified in Section 2 are found in column C. Column D calculates the air emission rates for the melter by dividing the value in column B by the applicable DF. Finally the tolerance rule is applied to the calculated value and the result is shown in column E.

Spreadsheets 'UnFRP01-LFP04' (Table D-4) and 'UnFRP01-HFP03' (Table D-7) include the correction factor for Zr+4 added as a glass former. These spreadsheets use a vertical lookup function to input the Zr+4 mass rate as a glass former (LAW stream LFP01, HLW stream HFP01), the CRV feed for LAW (stream LCP01), and the HLW MFPV feed (stream HLP09) from the stream reports (Tables C-4, C-6, C-10, and C-11). The ratio of waste feed to melter feed for Zr+4 is then calculated (cell O21) and used as the Zr+4 correction factor. This correction factor is multiplied by the lookup values corresponding to Zr+4 (column I) to adjust the representative constituent feed rate as needed to account for GFC additions.

For spreadsheets 'AbFRP01-PVP12', 'AbFRP01-PJV11', 'AbFRP01-LVP18', 'AbFRP01-HOP31', and 'AbFRP01-PJV34', the air emission rates were calculated by importing the unabated air emission rate for the corresponding system and then applying the corresponding DF to the unabated emission rate. These rates were imported into column B. The spreadsheet inputs are as follows:

- AbFRP01-PVP12: uses as input results from UnFRP01-PVP01 column L.
- AbFRP01-PJV11: uses as input results from UnFRP01-PJV04 column L.
- AbFRP01-LVP18: uses as input results from UnFRP01-LMP06 column E.
- AbFRP01-HOP31: uses as input results from UnFRP01-HMP06 column E.
- AbFRP01-PJV34: uses as input results from UnFRP01-PJV32 column L.

For spreadsheet 'AbFRP01-PVP12', the DFs from Section 2 were obtained and multiplied together to obtain an overall DF (cell K11). This overall DF was divided into the value of column B to arrive at the final stack air emission (column C). The same tolerance rule was applied to these values. The results are shown in column D. Calculations for spreadsheet 'AbFRP01-PJV11' were calculated identically as for 'AbFRP01-PVP12'.

For spreadsheet 'AbFRP01-LVP18', the calculations are identical except there are additional steps. Once the mass rate at LMP06 was imported to column B, the primary offgas system DF (SBS [column C] and WESP [column D])

were applied to arrive at the LOP08 (column E) mass rate. LOP08 is the exiting stream from the LAW primary offgas before the vessel vents are added (LVP01). Column F imports the values from column L of UnFRP01-LVP01. Columns E and F are then added together to arrive at the combined stream LVP03 (column G). The stack emission rate is then calculated by applying the remaining overall offgas system DF (cell P11). The final mass/rad rate is shown in column H. Column I applies the same tolerance rule as mentioned before and provides the final answer. The calculation for stream AbFRP01-HOP31 follows this same process.

Below are the more detailed calculations.

Feed Rates

1. Calculate total feed rate in liters/hr for streams FRP01 and FRP14

Feed Streams conditions (refer to Table D-1):
LAW Feed (FRP01)

- Na molarity: 4 mol/l (cell P4 imported from Table C-1)
- Volumetric Flowrate: 0.55 ft^3/min x 60 min/hr = 33 ft^3/hr (cell P5 imported from Table C-1)

Vol. flowrate in l/hr:
33 ft^3/hr * 28.317 l/ft^3 = 935 l/hr (cell R5)

HLW Feed (FRP14)
This stream includes supernate and solids. Supernate is part of the LAW feed and solids are the HLW feed. Feed rates and density provided in the stream report does not take into account the solids phase therefore it needs need to be adjusted.

- Na molarity: 4 mol/l (cell P7 imported from Table C-2)
- Supernate volumetric flowrate: 0.963 ft^3/min * 60 min/hr = 57.8 ft^3/hr (cell P6 imported from Table C-2)

Supernate volumetric flowrate in l/hr:
57.8 ft^3/hr * 28.317 l/ft^3 = 1,637 l/hr (cell R6)
The solids volumetric flowrate is calculated the following way:
HLW wt % solids = Solids mass rate (lb/d) ÷ Total stream mass rate (lb/d)
Solids mass rate = 5.05E+03 lb/d (cell E28 from Table C-2)
Total mass rate = 1.14E+05 lb/d (cell B14 from Table C-2)
wt % solids = 5.05E+03 lb/d ÷ 1.14E+05 lb/d x 100% = 4.6% (cell P8)
The stream density is then adjusted by 4.6% to account for the solids.
Stream density = 1.25 g/cm^3 (cell B11 from Table C-2)
Adjusted stream density = 1.25 g/cm^3 ÷ (1 - 0.046) = 1.31 g/cm^3 (cell P10)
The total stream density is defined as:

$$\rho_{stream} = \rho_{liquids} \times wt\%_{liquids} + \rho_{solids} \times wt\%_{solids}$$

Solving for solids density gives:

$$\rho_{solids} = \frac{\rho_{stream} - \rho_{liquids} \times wt\%_{liquids}}{wt\%_{solids}}$$

Substituting the values into the above equation gives:

$$\rho_{solids} = \frac{1.31\frac{g}{cm^3} - 1.25\frac{g}{cm^3} \times (1 - 0.046)}{0.046} = 2.6\frac{g}{cm^3} \text{ (cell P11)}$$

The solids volumetric flowrate is then the mass rate divided by the solids density.

Solids volumetric flowrate = (5.05E+03 lb/d) x (1,000 g / 2.2 lb) ÷ (2.6 g/cm^3) x (1 ft^3/28,317 cm^3) x (1 d / 24 hr)
Solids volumetric flowrate = 1.3 ft^3/hr (cell P13)
Converting to liters/hour:
1.3 ft^3/hr x 28.317 liters/ft^3 = 37 liters/hr (cell R13)

2. Example calculation: total feed rate of non-represented inorganic constituent, Be.

Feed concentrations in Table D-1 (columns C and I) are those specified in Section 2, bullet #3.
Be WTP feed rate (FRP01 + FRP14 - refer to Table D-1):
FRP01
Feed Concentration: 1.56E-05 mol/mol Na (cell C4)
1.56E-05 mol/mol Na (cell C4)* 4 mol Na/l (cell P4) = 6.24E-05 mol/l (cell E4)
6.24E-05 mol/l (cell E4) * 935 l/hr (cell R5) = 5.84E-02 mol/hr (cell F4)

FRP14
Solids portion
Feed concentration: 2.60E-04 mol/mol Na (cell I4)
2.60E-04 mol/mol Na (cell I4)* 4 mol Na/l (cell P7) = 1.04E-03 mol/l (cell J4)
1.04E-03 mol/l (cell J4) * 37 l/hr (cell R13) = 3.88E-02 mol/hr (cell K4)
Supernate portion
Feed concentration: 1.56E-05 mol/mol Na (cell C4)
1.56E-05 mol/mol Na (cell C4) x 4 mol/l (cell P7) = 6.24E-05 mol/l (cell L4)
6.24E-05 mol/l (cell L4) x 1,637 l/hr (cell R6) = 1.02E-01 mol/hr (cell M4)
Total FRP14 feed rate: 3.88E-02 mol/hr (cell K4) + 1.02E-01 mol/hr (cell M4) = 1.41E-01 mol/hr (cell N4)

Be total feed concentration (FRP01 + FRP14 - refer to Table D-2):
MW Be: 9 g/mole (cell B4)
(5.84E-02 + 1.41E-01) mol/hr (cell C4) * 9 g/mole (cell B4) * 1kg/1000g * 2.2 lb/kg * 24 hr/d = 9.47E-02 lb/d (cell D4)

3. Example calculation: total feed rate of non-represented radionuclide constituent, ^{106}Ru

^{106}Ru feed rate (FRP01 + FRP14 - refer to Table D-1):
FRP01
Feed Concentration: 1.17E+05 Bq/mol Na (cell C18)
1.17E+05 Bq/mol Na (cell C18)* 4 mol Na/l (cell P4) = 4.68E+05 Bq/l (cell E18)
4.68E+05 Bq/l (cell E18) * 935 l/hr (cell R5) = 4.38E+08 Bq/hr (cell F18)

FRP14
Solids portion
Feed concentration: 7.02E+05 Bq/mol Na (cell I18)
7.02E+05 Bq/mol Na (cell I18)* 4 mol Na/l (cell P7) = 2.81E+06 Bq/l (cell J18)
2.81E+06 Bq/l (cell J18) * 37 l/hr (cell R13)= 1.05E+08 Bq/hr (cell K18)
Liquids portion
Feed concentration: 1.17E+05 Bq/mol Na (cell C18)
1.17E+05 Bq/mol Na (cell C18) x 4 mol/l (cell P7) = 4.68E+05 Bq/l (cell L18)
4.68E+05 Bq/l (cell L18) x 1,637 l/hr (cell R6) = 7.66E+08 Bq/hr (cell M18)
Total FRP14 feed rate: 1.05E+08 Bq/hr (cell K18) + 7.66E+08 Bq/hr (cell M18) = 8.71E+08 Bq/hr (cell N18)

Total ^{106}Ru feed concentration (FRP01 + FRP14 - refer to Table D-2):
(4.38E+08 + 8.71E+08) Bq/hr (cell C18) * 1 Ci/3.7E+10 Bq * 24 hr/d = 8.49E-01 Ci/d (cell D18)

4. Calculate the concentration of tin (Sn) in the LAW and HLW feeds

Non-radioactive tin (Sn) feed concentration is equivalent to the radioactive tin feed concentration.
126Sn feed (refer to Table D-1 for all cell references shown below):
4.08E+04 Bq/mol Na LAW Feed (cell B36) * 1 Ci / 3.7E+10 Bq = 1.10E-06 Ci/mol Na (cell E36)
6.72E+06 Bq/mol Na HLW Feed (cell B37) * 1 Ci / 3.7E+10 Bq = 1.82E-04 Ci/mol Na (cell E37)
Conversion factor for tin: 29 Ci Sn/kg Sn (cell B38)
LAW: 1.10E-06 Ci/mol Na (cell E36) * 1 kg Sn / 29 Ci Sn (cell B38) = 3.80E-08 kg/mol Na (cell B39)
HLW: 1.82E-04 Ci/mol Na (cell E37) * 1 kg Sn / 29 Ci Sn (cell B38) = 6.26E-06 kg/mol Na (cell B40)
Sn MW = 118.7 g/mol (cell B41)
LAW feed: 3.80E-08 kg/mol Na (cell B39) * 1000g/kg * 1 mol/118.7 g (cell B41) = 3.20E-07 mol/mol Na (cell B42)
HLW feed: 6.26E-06 kg/mol Na (cell B40) * 1000g/kg * 1 mol/118.7 g (cell B41) = 5.28E-05 mol/mol Na (cell B43)

Stream # PJV04 Calculation

PF, as defined in Section 5, is calculated in Column J.
Be (refer to Table D-2)
Feed rate (FRP01 + FRP14): 5.84E-02 mol/hr (Table D-1 cell F4) + 1.41E-01 mol/hr (Table D-1 cell N4) = 1.99E-01 mol/hr (cell C4 from Table D-2)
1.99E-01 mol/hr (cell C4) * 9 g/mol (cell B4) * 24 hr/d * 2.2 lb / 1000 g = 9.47E-02 lb/d (cell D4 from Table D-2)
Representative compound: Zr+4
Zr+4 feed rate from FRP01 + FRP14 (from Tables C-1 and C-2): 1.25E+02 lb/d (cell G4 from Table D-2)
Zr+4 mass flowrate (total) in PJV04 (from Table C-3): 4.49E-04 lb/d (cell I4 from Table D-2)
PF = 1.25E+02 lb/d (cell G4) / 4.49E-04 lb/d (cell I4) = 2.78E+05 (cell J4 from Table D-2)
Be mass flowrate in PJV04 = 9.47E-02 lb/d (cell D4) / 2.78E+05 (cell J4) = 3.41E-07 lb/d
Converting to g/sec: 4.03E-07 lb/d * 1d / 24hr * 1hr / 3600 sec * 1000g / 2.2 lb = 1.79E-09 g/sec (cell K4 from Table D-2). Since this value is greater than 1.00E-15, no changes in the mass rate are required (cell L4).

106Ru (refer to Table D-2)
Feed rate (FRP01 + FRP14): 4.38E+08 Bq/hr (Table D-1 cell F18) + 8.71E+08 Bq/hr (Table D-1 cell N18) = 1.31E+09 Bq/hr (Table D-2 cell C18)
1.31E+09 Bq/hr (cell C18) * 1 Ci / 3.7E+10 Bq * 24 hr/d = 0.849 Ci/d (cell D18 from Table D-2)
Representative compound: F-
F- feed rate from FRP01 + FRP14 (from Tables C-1 and Table C-2): 1.35E+02 lb/d (cell G18 from Table D-2)
F- mass flowrate in PJV04 (from Table C-3): 3.75E-04 lb/d (cell I18 from Table D-2)
PF = 1.35E+02 (cell G19) /3.75E-04 (cell I19)= 3.60E+05 (cell J18 from Table D-2)
106Ru mass flowrate in PJV04 = 0.849 Ci/d (cell D18) / 3.60E+05 (cell J18)= 2.36E-06 Ci/d (cell K18 from Table D-2). Since this value is greater than 1.00E-15, no changes in the rad rate are required. This value is then converted to Ci/year by multiplying by 365 days/year.
2.36E-06 Ci/d (cell K18) x 365 days/year = 8.61E-04 Ci/yr (cell L18)

Stream # PVP01 Calculation

Be (refer to Table D-3)
Feed rate (FRP01 + FRP14): 5.84E-02 mol/hr (Table D-1 cell F4) + 1.41E-01 mol/hr (Table D-1 cell N4) = 1.99E-01 mol/hr (cell C4)
1.99E-01 mol/hr (cell C4) * 9 g/mol (cell B4) * 24 hr/d * 2.2 lb / 1000 g = 9.47E-02 lb/d (cell D4 from Table D-3)
Representative compound: Zr+4
Zr+4 feed rate from FRP01 + FRP14 (from Tables C-1 and C-2): 1.25E+02 lb/d (cell G4 from Table D-3)
Zr+4 mass flowrate (total) in PVP01 (from Table C-20): 6.18E-04 lb/d (cell I4 from Table D-3)
PF = 1.25E+02 lb/d (cell G4) / 6.18E-04 lb/d (cell I4) = 2.02E+05 (cell J4 from Table D-3)
Be mass flowrate in PVP01 = 9.47E-02 lb/d / 2.02E+05 = 4.69E-07 lb/d
Converting to g/sec: 4.69E-07 lb/d * 1d / 24hr * 1hr / 3600 sec * 1000g / 2.2 lb = 2.47E-09 g/sec (cell K4 from Table D-3). Since this value is greater than 1.00E-15, no changes in the mass rate are required (cell L4).

106Ru (refer to Table D-3)
Feed rate (FRP01 + FRP14): 4.38E+08 Bq/hr (Table D-1 cell F18) + 8.71E+08 Bq/hr (Table D-1 cell N18) = 1.31E+09 Bq/hr (Table D-2 cell C18)
1.31E+09 Bq/hr (cell C18) * 1 Ci / 3.7E+10 Bq * 24 hr/d = 0.849 Ci/d (cell D18 from Table D-3)
Representative compound: F-
F- feed rate from FRP01 + FRP14 (from Tables C-1 and C-2): 1.35E+02 lb/d (cell G18 from Table D-3)
F- mass flowrate (total) in PVP01 (from Table C-20): 5.62E-04 lb/d (cell I19 from Table D-3)
PF = 1.35E+02 lb/d (cell G18) / 5.62E-04 lb/d (cell I18) = 2.40E+05 (cell J19 from Table D-3)
106Ru mass flowrate in PVP01 = 0.849 Ci/d (cell D18)/ 2.40E+05 (cell J18) = 3.54E-06 Ci/d (cell K18 from Table D-3). Since this value is greater than 1.00E-15, no changes in the rad rate are required. This value is then converted to Ci/year by multiplying by 365 days/year.
3.81E-06 Ci/d (cell K18) x 365 days/year = 1.29E-03 Ci/yr (cell L18)

The rest of the calculations are shown in Attachment D.

Calculation of Correction Factor for Constituents Represented by Zr+4

LAW Melter (see Table D-4)

Zr+4 added with the glass formers (LFP01): 2.49E+03 lb/day (cell O19)
Zr+4 at the outlet of the LAW CRV (LCP01): 9.09 lb/day (cell O20)
Correction factor for Zr+4: (9.09) / (9.09 + 2.49E+03) = 3.64E-03 (cell O21)

This correction factor was applied to all constituents represented as Zr+4 in stream LFP04.

HLW Melter (see Table D-7)

Zr+4 added with the glass formers (HFP01): 2.12E+01 lb/day (cell O19)
Zr+4 at the inlet of the MFPV (HLP09): 1.25E+02 lb/day (cell O20)
Correction factor for Zr+4: (125) / (21.2 + 125) = 0.855 (cell O21)

This correction factor was applied to all constituents represented as Zr+4 in stream HFP03.

LMP06 Calculation

To calculate the emission rates for the LAW melter (Table D-5), first the rates calculated for stream LFP04 were imported to column B of the 'UnFRP01-LMP06' spreadsheet. The appropriate LAW melter DFs specified in Section 2 were imported to column C. The emission rate for LMP06 is simply the division of the mass/rad rate in LFP04 by the melter DF. For Be:

LFP04 mass rate: 3.63E-05 g/sec (cell B5)
Be melter DF: 200 (cell C5)
LMP06 mass rate: 3.63E-05 g/sec (cell B5) ÷ 200 (cell C5) = 1.81E-07 g/sec (cell D5)
Since this value is greater than 1.00E-15, no changes in the mass rate are required (cell E5).

For 106Ru:
LFP04 rate: 2.02E+02 Ci/yr (cell B19)
Melter DF: 3.9 (cell C19)
LMP06 mass rate: 2.02E+02 Ci/yr (cell B19) ÷ 3.9 (cell C19) = 5.18E+01 Ci/yr (cell D19)
Since this value is greater than 1.00E-15, no changes in the rad rate are required (cell E19).

The emission rates for stream HMP06 (Table D-8) were calculated identically as stated above for LMP06.

PVP12 Calculation

PVP12 is the Pretreatment stack stream. To calculate the emission rates for this stream, the values from stream PVP01 were imported into column B of the 'AbFRP01-PVP12' spreadsheet (Table D-11). The stack emission rate is simply the division of the PVP01 mass rate by the overall vessel vent system DF. The DFs, obtained from Section 2, equate to the following overall DF:

PVV overall DF: 3.5 x 200 x 200,000 x 1 x 1 = 1.40E+08 (cell K11)

Therefore, for Be:
PVP01 mass rate: 2.47E-09 g/sec (cell B5)
PVP12 mass rate: 2.47E-09 g/sec (cell B5) ÷ 1.40E+08 (cell K11) = 1.76E-17 g/sec (cell C5)
Since this value is less than 1.00E-15, it is changed to zero (cell D5).

For 106Ru:
PVP01 rate: 1.29E-03 Ci/yr (cell B19)
PVP12 rate: 1.29E-03 Ci/yr (cell B19) ÷ 1.40E+08 (cell K11) = 9.22E-12 Ci/yr (cell C19)
Since this value is greater than 1.00E-15, no changes in the rad rate are required (cell D19).

This same calculation process was used for streams PJV11 (Table D-12) and PJV34 (Table D-15).

LVP18 Calculation (Table D-13)

To calculate the emission rates for this stream, first, the melter emissions (from LMP06) were divided by the SBS and WESP DFs specified for the LAW primary offgas system in Section 2. At this point, the stream is LOP08. Also at this point is where the vessel vents join the offgas system. The rates for the vessel vents were calculated in spreadsheet "UnFRP01-LVP01'. These two streams were added together to arrive at the composition of stream

LVP03. From this point on, the remaining offgas DF is applied to the rate values of stream LVP03 to obtain the final LVP18 air emission rate. The sketch below depicts the process just described:

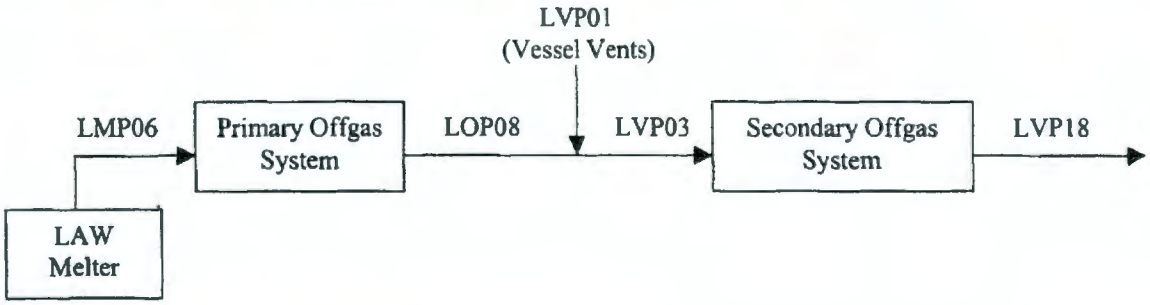

For Be:
LMP06 mass rate: 1.81E-07 g/sec (cell B5)
SBS DF: 40 (cell C5)
WESP DF: 11 (cell D5)
LOP08 rate: 1.81E-07 g/sec (cell B5) ÷ 40 (cell C5) ÷ 11 (cell D5) = 4.12E-10 g/sec (cell E5)
LVP01 rate: 3.80E-08 g/sec (cell F5)
LVP03 rate: 4.12E-10 g/sec (cell E5) + 3.80E-08 g/sec (cell F5) = 3.84E-08 g/sec (cell G5)

The remaining overall offgas system DF is:
200,000 x 1 x 1 x 1 x 1 = 200,000 (cell P11)
LVP18 rate: 3.84E-08 g/sec (cell G5) ÷ 200,000 (cell P11) = 1.92E-13 g/sec (cell H5)
Since this value is greater than 1.00E-15, no changes in the mass rate are required (cell I5).

For 106Ru:
LMP06 rate: 5.18E+01 Ci/yr (cell B19)
SBS DF: 3.6 (cell C19)
WESP DF: 4 (cell D19)
LOP08 rate: 5.18E+01 Ci/yr (cell B19) ÷ 3.6 (cell C19) ÷ 4 (cell D19) = 3.59 Ci/yr (cell E19)
LVP01 rate: 6.37E-06 Ci/yr (cell F19)
LVP03 rate: 3.59 Ci/yr (cell E19) + 6.37E-06 Ci/yr (cell F19) = 3.59 Ci/yr (cell G19)
LVP18 rate: 3.59 Ci/yr (cell G19) ÷ 200,000 (cell P11) = 1.80E-05 Ci/yr (cell H19)
Since this value is greater than 1.00E-15, no changes in the rad rate are required (cell I19).

This same calculation process was used for stream HOP31 that follows the process flow shown below:

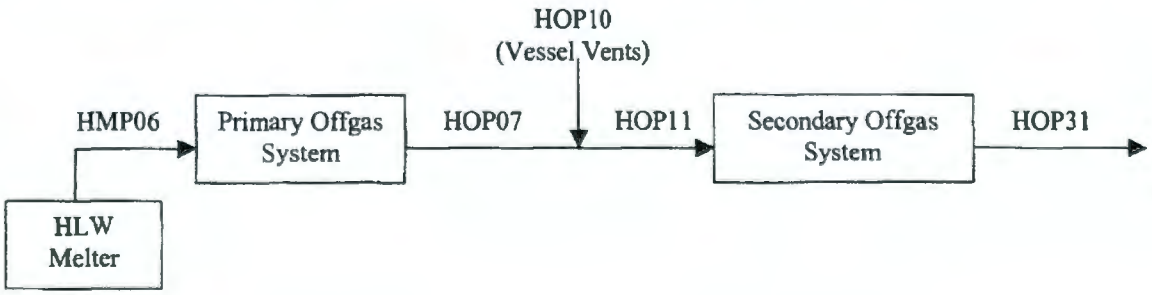

All calculations for stream HOP31 are shown on Table D-14.

8 Results and Conclusions

A summary of the results per constituent is presented below. Emissions rates from the non-represented inorganic and radionuclide compounds in the SSFM have been estimated in this calculation. These rates will be reported in the next revision of the *Integrated Emissions Baseline Report for the Hanford Tank Waste Treatment and Immobilization Plant* (24590-WTP-RPT-PO-03-008). This calculation will be updated each time a new official emissions profile is generated.

SUBJECT: Integrated Baseline Emissions Report Non-SSFM Represented Constituents Emissions Rate Estimation

Summary of Calculation Results

	FRP01 + FRP14	PJV04	PVP01	LFP04	LMP06	LVP01	HFP03	HMP06	HOP10	PJV32	PVP12	PJV11	LVP18	HOP31	PJV34
Inorganics	g/sec	g/sec	g/sec	g/sec	g/sec	g/sec	g/sec	g/sec	g/sec	g/sec	g/sec	g/sec	g/sec	g/sec	g/sec
Be	4.98E-04	1.79E-09	2.47E-09	3.63E-05	1.81E-07	3.80E-08	4.98E-04	3.83E-06	1.16E-10	1.93E-12	0.00E+00	1.79E-15	1.92E-13	0.00E+00	0.00E+00
CN	1.31E-03	3.06E-09	8.60E-09	9.09E-04	2.27E-05	5.07E-09	5.25E-04	1.31E-05	1.05E-10	8.26E-12	0.00E+00	3.06E-15	8.99E-13	2.02E-15	0.00E+00
Co	2.35E-03	8.40E-09	1.01E-08	5.89E-05	2.95E-07	3.37E-10	2.33E-03	1.79E-05	4.66E-10	2.04E-11	0.00E+00	8.40E-15	2.47E-14	1.40E-14	0.00E+00
Mo	1.80E-02	6.32E-08	4.77E-08	9.77E-04	1.22E-05	5.60E-09	1.73E-02	2.67E-04	3.46E-09	1.88E-10	0.00E+00	6.32E-14	4.26E-14	1.60E-15	0.00E+00
Sb	4.52E-03	1.58E-08	1.19E-08	2.39E-04	2.99E-06	1.37E-09	4.33E-03	4.33E-05	8.66E-10	2.73E-11	0.00E+00	1.58E-14	3.43E-13	5.42E-14	0.00E+00
Se	7.76E-03	2.15E-08	3.23E-08	5.05E-03	2.97E-03	3.03E-08	4.20E-03	2.00E-03	8.49E-10	5.19E-10	0.00E+00	2.15E-14	1.78E-11	1.73E-14	2.59E-15
Sn	3.69E-04	1.20E-09	1.05E-09	5.80E-05	2.90E-07	3.31E-10	3.13E-04	2.41E-06	6.26E-11	1.64E-12	0.00E+00	1.20E-15	4.95E-15	0.00E+00	0.00E+00
Ta	7.28E-03	2.62E-08	3.60E-08	5.30E-04	2.12E-06	5.56E-07	7.27E-03	5.59E-05	1.70E-09	2.82E-11	0.00E+00	2.62E-14	2.78E-12	0.00E+00	0.00E+00
Tl	5.54E-03	1.54E-08	2.31E-08	3.61E-03	6.01E-04	2.16E-08	3.00E-03	2.31E-05	6.06E-10	3.70E-10	0.00E+00	1.54E-14	5.20E-13	0.00E+00	1.85E-15
U	1.43E-01	4.90E-07	6.51E-07	1.35E-02	6.73E-05	7.69E-08	1.31E-01	1.01E-03	2.63E-08	1.15E-09	4.65E-15	4.90E-13	1.15E-12	1.29E-13	5.74E-15
V	3.11E-03	1.09E-08	8.27E-09	1.69E-04	2.12E-06	9.71E-10	2.99E-03	2.30E-05	5.99E-10	3.26E-11	0.00E+00	1.09E-14	7.32E-15	0.00E+00	0.00E+00
W	6.46E-03	2.32E-08	3.20E-08	4.70E-04	1.88E-06	4.93E-07	6.45E-03	4.96E-05	1.51E-09	2.50E-11	0.00E+00	2.32E-14	2.47E-12	0.00E+00	0.00E+00
Y	1.29E-03	4.48E-09	3.40E-09	7.55E-05	7.55E-07	4.32E-10	1.22E-03	1.22E-05	2.45E-10	7.70E-12	0.00E+00	4.48E-15	1.07E-14	1.56E-15	0.00E+00
Radionuclides	Ci/yr	Ci/yr	Ci/yr	Ci/yr	Ci/yr	Ci/yr	Ci/yr	Ci/yr	Ci/yr	Ci/yr	Ci/yr	Ci/yr	Ci/yr	Ci/yr	Ci/yr
106Ru	3.10E+02	8.61E-04	1.29E-03	2.02E+02	5.18E+01	6.37E-06	1.68E+02	4.31E+01	3.39E-05	2.07E-05	9.22E-12	8.61E-10	1.80E-05	3.32E-08	1.04E-10
113mCd	6.29E+02	2.41E-03	1.86E-03	5.27E+01	5.27E+00	1.59E-06	6.54E+02	6.54E+01	1.31E-04	4.15E-05	1.33E-11	2.41E-09	2.06E-07	2.32E-08	2.08E-10
134Cs	4.83E+03	1.07E-02	1.31E-02	3.90E-01	1.95E-01	1.44E-08	5.00E+03	1.88E+02	1.00E-03	1.05E-04	9.35E-11	1.07E-08	1.35E-08	1.31E-07	5.27E-10
137mBa	1.61E+07	3.57E+01	4.34E+01	1.29E+03	6.47E+02	4.78E-05	1.66E+07	6.24E+05	3.33E+00	3.50E-01	3.10E-07	3.57E-05	4.49E-05	4.34E-04	1.75E-06
226Ra	1.10E-03	3.95E-09	5.43E-09	7.99E-05	1.33E-05	4.41E-10	1.10E-03	8.43E-06	2.57E-10	4.25E-12	0.00E+00	3.95E-15	2.04E-14	0.00E+00	0.00E+00
227Ac	1.05E+00	3.76E-06	5.17E-06	7.61E-02	5.56E-05	4.20E-07	1.04E+00	8.03E-03	2.44E-07	4.05E-09	3.70E-14	3.76E-12	2.18E-12	1.26E-14	2.02E-14
228Ra	1.72E+00	6.20E-06	8.53E-06	1.26E-01	2.09E-02	6.92E-07	1.72E+00	1.32E-02	4.03E-07	6.67E-09	6.09E-14	6.20E-12	3.21E-11	2.08E-14	3.34E-14
229Th	3.01E-01	1.08E-06	1.28E-06	6.85E-03	2.74E-05	3.67E-08	3.00E-01	2.30E-03	6.00E-08	2.60E-09	9.17E-15	1.08E-12	2.21E-13	3.51E-15	1.30E-14
231Pa	7.77E-01	2.79E-06	3.84E-06	5.65E-02	4.13E-05	3.12E-07	7.76E-01	5.97E-03	1.82E-07	3.00E-09	2.74E-14	2.79E-12	1.62E-12	9.36E-15	1.50E-14
232U	1.18E+00	4.27E-06	5.00E-06	9.09E-03	4.54E-05	2.73E-10	1.19E+00	9.16E-03	2.38E-07	1.04E-08	3.57E-14	4.27E-12	5.18E-13	1.17E-12	5.20E-14
59Ni	2.47E+02	5.18E-04	1.02E-03	1.77E+02	1.99E+00	5.34E-06	7.16E+01	9.39E-01	1.43E-05	5.07E-07	7.31E-12	5.18E-10	8.44E-08	4.43E-10	2.54E-12
79Se	1.37E+01	3.82E-05	5.72E-05	8.96E+00	5.27E+00	2.83E-07	7.45E+00	3.55E+00	1.50E-06	9.19E-07	4.09E-13	3.82E-11	3.29E-08	3.07E-11	4.60E-12
90Y	3.59E+06	1.25E+01	9.48E+00	2.11E+05	2.11E+03	6.34E-03	3.41E+06	3.41E+04	6.83E-01	2.15E-02	6.77E-08	1.25E-05	2.40E-05	4.35E-06	1.07E-07
93Zr	7.49E+02	2.69E-03	3.71E-03	5.45E+01	1.82E-01	3.01E-04	7.48E+02	9.24E+00	1.75E-04	2.90E-06	2.65E-11	2.69E-09	6.85E-09	1.72E-09	1.45E-11
93mNb	4.54E+02	1.63E-03	2.25E-03	3.31E+01	3.31E-02	1.82E-04	4.54E+02	3.49E+00	1.06E-04	1.76E-06	1.61E-11	1.63E-09	9.57E-10	9.47E-12	8.79E-12
242Cm	3.76E+01	1.36E-04	1.58E-04	6.54E-02	3.27E-04	1.96E-09	3.80E+01	2.93E-01	7.61E-06	3.32E-07	1.13E-12	1.36E-10	3.72E-12	3.74E-11	1.66E-12

9 References

Project Documents

CCN 128548, Memorandum, E. Berríos to File, October 24, 2005, "Air Emissions LAW and HLW Vitrification Melters and Primary Offgas Inorganic and Radionuclide Constituents Decontamination Factors"

24590-WTP-DB-ENG-01-001, Rev 1C, *Basis of Design*

24590-WTP-M4C-FRP-00001, Rev 0D, *Updated Emissions Run Feed Vector*, Section 8

24590-WTP-MRQ-PO-05-0049, Rev 0, *2005 Air Emissions Profile*

24590-WTP-RPT-PO-03-008, Rev 1, *Integrated Emissions Baseline Report for the Hanford Tank Waste Treatment and Immobilization Plant*, Section 5.2 and Tables 5 and 12

Other Documents

Human Health Fact Sheet, ANL, July 2002, http://www.ead.anl.gov/pub/doc/Tbl2RadProp.pdf (Attachment A)

Gillespie, R and others, 1986, *Chemistry*, Allyn and Bacon, Inc, Boston, inside cover page (Attachment B)

Perry, R and others, 1984, *Perry's Chemical Engineers' Handbook*, Sixth Edition, McGraw Hill Book Company

10 Attachments

Attachment A – Summary Radioactive Properties for Selected Radionuclides (4 pages)

Attachment B – Periodic Table of the Elements (2 pages)

Attachment C - Steady State Flowsheet Model Stream Reports (49 pages)

Attachment D - Calculations (16 pages)

Attachment A - Summary Radioactive Properties for Selected Radionuclides

CALC. NO. 24590-WTP-M4C-FRP-00003, Rev D

ATTACHMENT A
PAGE - A-2

TABLE 2. Summary Radioactive Properties for Selected Radionuclides

Isotope	Half-Life	Specific Activity (Ci/g)	Decay Mode	Radiation Energy (MeV)		
				Alpha (α)	Beta (β)	Gamma (γ)
Americium-241	430 yr	3.5	α	5.5	0.052	0.033
Americium-242m	150 yr	9.8	IT	0.025	0.044	0.051
Americium-242	*16 hr*	*820,000*	*β, EC*	*-*	*0.18*	*0.018*
Americium-243	7,400 yr	0.20	α	5.3	0.022	0.055
Neptunium-239	*2.4 days*	*230,000*	*β*	*-*	*0.26*	*0.17*
Berkelium-247	1,400 yr	1.1	α	5.6	0.061	0.11
Californium-249	350 yr	4.1	α	5.8	0.043	0.33
Californium-251	900 yr	1.6	α	5.8	0.020	0.13
Cadmium-109	1.3 yr	2,600	EC	-	0.083	0.026
Cadmium-113[n]	9.3×10^{15} yr	3.4×10^{-13}	β	-	0.093	-
Cadmium-113m	14 yr	240	β	-	0.019	-
Carbon-14[n]	5.700 yr	4.5	β	-	0.049	-
Cesium-134	2.1 yr	1,300	β	-	0.16	1.6
Cesium-135	2.3 million yr	0.0012	β	-	0.067	-
Cesium-137	30 yr	88	β	-	0.19	-
Barium-137m (95%)	*2.6 min*	*540 million*	*IT*	*-*	*0.065*	*0.60*
Chlorine-36	300,000 yr	0.033	β, EC	-	0.027	<0.001
Cobalt-57	270 days	8,600	EC	-	0.019	0.13
Cobalt-60	5.3 yr	1,100	β	-	0.097	2.5
Curium-242	160 days	3,400	α	6.1	0.010	0.0018
Curium-243	29 yr	52	α	5.8	0.14	0.13
Curium-244	18 yr	82	α	5.8	0.086	00017
Curium-245	8,500 yr	0.17	α	5.4	0.065	0.096
Curium-246	4,700 yr	0.31	α	5.4	0.0080	0.0015
Curium-247	16 million yr	0.000094	α	4.9	0.021	0.32
Curium-248	340,000 yr	0.0043	α	4.7	0.0060	0.0012
Curium-250	6,900 yr	0.21	α, β	1.3	0.0016	-
Plutonium-246 (25%)	*11 days*	*49,000*	*β*	*-*	*0.13*	*0.14*
Berkelium-250 (14%)	*3.2 hr*	*3.9 million*	*β*	*-*	*0.29*	*0.89*
Americium-246 (25%)	*39 min*	*20 million*	*β*	*-*	*0.66*	*0.70*
Europium-150	34 yr	70	EC	-	0.044	1.5
Europium-152	13 yr	180	β, EC	-	0.14	1.2
Europium-154	8.8 yr	270	β	-	0.29	1.2
Europium-155	5.0 yr	470	β	-	0.063	0.061
Iodine-129	16 million yr	0.00018	β	-	0.064	0.025
Iodine-131	8.0 days	130,000	β	-	0.19	0.38
Krypton-81	210,000 yr	0.021	EC	-	0.0051	0.012
Krypton-85	11 yr	400	β	-	0.25	0.0022
Neptunium-235	1.1 yr	1,400	EC	<0.001	0.010	0.0071
Neptunium-236	120,000 yr	0.013	β	-	0.21	0.14
Plutonium-236 (9%)	*2.9 yr*	*540*	*α*	*5.8*	*0.013*	*0.0021*

Isotope	Half-Life	Specific Activity (Ci/g)	Decay Mode	Radiation Energy (MeV)		
				Alpha (α)	Beta (β)	Gamma (γ)
Neptunium-237	2.1 million yr	0.00071	α	4.8	0.070	0.035
Protactinium-233	*27 days*	*21,000*	*β*	-	*0.20*	*0.20*
Nickel-59	75,000 yr	0.082	EC	-	0.0046	0.0024
Nickel-63	96 yr	60	β	-	0.17	-
Plutonium-238	88 yr	17	α	5.5	0.011	0.0018
Plutonium-239	24,000 yr	0.063	α	5.1	0.0067	<0.001
Plutonium-240	6,500 yr	0.23	α	5.2	0.011	0.0017
Plutonium-241	14 yr	100	β	<0.001	0.0052	<0.001
Plutonium-242	380,000 yr	0.0040	α	4.9	0.0087	0.0014
Potassium-40[a]	1.3 billion yr	0.0000071	β, EC	-	0.52	0.16
Protactinium-231[a]	33,000 yr	0.048	α	5.0	0.065	0.048
Actinium-227[a]	*22 yr*	*73*	*α, β*	*0.068*	*0.016*	*<0.001*
Thorium-227[a] (99%)	*19 days*	*31,000*	*α*	*5.9*	*0.053*	*0.11*
Francium-223[a] (1%)	*22 min*	*39 million*	*β*	-	*0.40*	*0.059*
Radium-223[a]	*11 days*	*52,000*	*α*	*5.7*	*0.076*	*0.13*
Radon-219[a]	*4.0 sec*	*13 billion*	*α*	*6.8*	*0.0063*	*0.056*
Polonium-215[a]	*0.0018 sec*	*30 trillion*	*α*	*7.4*	*<0.001*	*<0.001*
Lead-211[a]	*36 min*	*25 million*	*β*	-	*0.46*	*0.051*
Bismuth-211[a]	*2.1 min*	*420 million*	*α, β*	*6.6*	*0.010*	*0.047*
Thallium-207[a]	*4.8 min*	*190 million*	*β*	-	*0.49*	*0.0022*
Radium-226[a]	1600 yr	1.0	α	4.8	0.0036	0.0067
Radon-222[a]	*3.8 days*	*160,000*	*α*	*5.5*	*<0.001*	*<0.001*
Polonium-218[a]	*3.1 min*	*290 million*	*α*	*6.0*	*<0.001*	*<0.001*
Lead-214[a]	*27 min*	*33 million*	*β*	-	*0.29*	*0.25*
Bismuth-214[a]	*20 min*	*45 million*	*β*	-	*0.66*	*1.5*
Polonium-214[a]	*0.00016 sec*	*330 trillion*	*α*	*7.7*	*<0.001*	*<0.001*
Lead-210[a]	*22 yr*	*77*	*β*	-	*0.038*	*0.0048*
Bismuth-210[a]	*5.0 days*	*130,000*	*β*	-	*0.39*	-
Polonium-210[a]	*140 days*	*4,500*	*α*	*5.3*	*<0.001*	*<0.001*
Radium-228[a]	5.8 yr	280	β	-	0.017	<0.001
Actinium-228[a]	*6.1 hr*	*2.3 million*	*β*	-	*0.48*	*0.97*
Thorium-228[a]	*1.9 yr*	*830*	*α*	*5.4*	*0.021*	*0.0033*
Radium-224[a]	*3.7 days*	*160,000*	*α*	*5.7*	*0.0022*	*0.010*
Radon-220[a]	*56 sec*	*930 million*	*α*	*6.3*	*<0.001*	*<0.001*
Polonium-216[a]	*0.15 sec*	*350 billion*	*α*	*6.8*	*<0.001*	*<0.001*
Lead-212[a]	*11 hr*	*1.4 million*	*β*	-	*0.18*	*0.15*
Bismuth-212[a]	*61 min*	*15 million*	*α, β*	*2.2*	*0.47*	*0.19*
Polonium-212[a] (64%)	*0.00000031 sec*	*180,000 trillion*	*α*	*8.8*	-	-
Thallium-208[a] (36%)	*3.1 min*	*300 million*	*β*	-	*0.60*	*3.4*
Samarium-146	100,000,000 yr	0.000024	α	2.5	-	-
Samarium-151	90 yr	27	β	-	0.020	<0.001
Selenium-79	650,000 yr	0.070	β	-	0.056	-
Strontium-90	29 yr	140	β	-	0.20	-
Yttrium-90	*64 hr*	*550,000*	*β*	-	*0.94*	*<0.001*

Isotope	Half-Life	Specific Activity *(Ci/g)*	Decay Mode	Radiation Energy *(MeV)*		
				Alpha *(α)*	Beta *(β)*	Gamma *(γ)*
Technetium-97	2.6 million	0.0014	EC	-	0.0056	0.011
Technetium-98	4.2 million	0.00088	β	-	0.16	1.4
Technetium-99	210,000	0.017	β	-	0.10	-
Thorium-229	14 billion yr	0.00000011	α	4.0	0.012	0.0013
Radium-225	*15 days*	*40,000*	*β*	-	*0.11*	*0.014*
Actinium-225	*10 days*	*59,000*	*α*	*5.8*	*0.022*	*0.018*
Francium-221	*4.8 min*	*180 million*	*α*	*6.3*	*0.010*	*0.031*
Astatine-217	*0.032 sec*	*1.6 trillion*	*α*	*7.1*	*<0.001*	*<0.001*
Bismuth-213	*46 min*	*20 million*	*α, β*	*0.13*	*0.44*	*0.13*
Polonium-213 (98%)	*0.0000042 sec*	*13,000 trillion*	*α*	*8.4*	-	-
Thallium-209 (2%)	*2.2 min*	*410 million*	*β*	-	*0.69*	*2.0*
Lead-209	*3.3 hr*	*4.7 million*	*β*	-	*0.20*	-
Thorium-230[n]	77,000 yr	0.020	α	4.7	0.015	0.0016
Thorium-232[n]	7,300 yr	0.22	α	4.9	0.12	0.096
Tin-121m	55 yr	54	β, IT	-	0.035	0.0049
Tin-121 (78%)	*27 hr*	*970,000*	*β*	-	*0.11*	-
Tin-126	250,000 yr	0.029	β	-	0.17	0.057
Antimony-126	*12 days*	*85,000*	*β*	-	*0.28*	*2.8*
Tritium (H-3)[n]	12 yr	9,800	β	-	0.0057	-
Uranium-232	72 hr	22	α	5.3	0.017	0.0022
Uranium-233	160,000 yr	0.0098	α	4.8	0.0061	0.0013
Uranium-234[n]	240,000 yr	0.0063	α	4.8	0.013	0.0017
Uranium-235[n]	700 million yr	0.0000022	α	4.4	0.049	0.16
Thorium-231[n]	*26 hr*	*540,000*	*β*	-	*0.17*	*0.026*
Uranium-236	23 million yr	0.000065	α	4.5	0.011	0.0016
Uranium-238[n]	4.5 billion yr	0.00000034	α	4.2	0.010	0.0014
Thorium-234[n]	*24 days*	*23,000*	*β*	-	*0.060*	*0.0093*
Protactinium-234m[n]	*1.2 min*	*690 million*	*β*	-	*0.82*	*0.012*
Zirconium-93	1.5 million yr	0.0025	β	-	0.020	-
Niobium-93m	*14 yr*	*290*	*IT*	-	*0.028*	*0.0019*

This table summarizes key radioactive properties of selected radionuclides and their associated decay products (for which information is presented in italics). Values are given to two significant figures. See the radionuclide-specific fact sheets for further information. EC = electron capture, IT = isomeric transition, Ci = curie, g = gram, and MeV = million electron volts. A dash indicates that the entry is not applicable, and an "n" indicates that the isotope exists naturally in the environment. (See the companion fact sheet on *Radioactive Properties, Internal Distribution, and Risk Coefficients* for an explanation of terms and interpretation of radiation energies.)

Attachment B – Periodic Table of the Elements

1 ← Atomic number H 1.008 ← Atomic mass

Group*

Period	I/1	II/2	3	4	5	6	7	8	9	10	11	12	III/13	IV/14	V/15	VI/16	VII/17	VIII/18
1	1 **H** 1.008																	2 **He** 4.003
2	3 **Li** 6.941	4 **Be** 9.012											5 **B** 10.81	6 **C** 12.01	7 **N** 14.01	8 **O** 16.00	9 **F** 19.00	10 **Ne** 20.18
3	11 **Na** 22.99	12 **Mg** 24.31											13 **Al** 26.98	14 **Si** 28.09	15 **P** 30.97	16 **S** 32.06	17 **Cl** 35.45	18 **Ar** 39.95
4	19 **K** 39.10	20 **Ca** 40.08	21 **Sc** 44.96	22 **Ti** 47.90	23 **V** 50.94	24 **Cr** 52.00	25 **Mn** 54.94	26 **Fe** 55.85	27 **Co** 58.93	28 **Ni** 58.70	29 **Cu** 63.55	30 **Zn** 65.38	31 **Ga** 69.72	32 **Ge** 72.59	33 **As** 74.92	34 **Se** 78.96	35 **Br** 79.90	36 **Kr** 83.80
5	37 **Rb** 85.47	38 **Sr** 87.62	39 **Y** 88.91	40 **Zr** 91.22	41 **Nb** 92.91	42 **Mo** 95.94	43 **Tc** (98)	44 **Ru** 101.1	45 **Rh** 102.9	46 **Pd** 106.4	47 **Ag** 107.9	48 **Cd** 112.4	49 **In** 114.8	50 **Sn** 118.7	51 **Sb** 121.8	52 **Te** 127.6	53 **I** 126.9	54 **Xe** 131.3
6	55 **Cs** 132.9	56 **Ba** 137.3	57 **La** 138.9	72 **Hf** 178.5	73 **Ta** 180.9	74 **W** 183.9	75 **Re** 186.2	76 **Os** 190.2	77 **Ir** 192.2	78 **Pt** 195.1	79 **Au** 197.0	80 **Hg** 200.6	81 **Tl** 204.4	82 **Pb** 207.2	83 **Bi** 209.0	84 **Po** (209)	85 **At** (210)	86 **Rn** (222)
7	87 **Fr** (223)	88 **Ra** (226.0)	89 **Ac** (227)	104	105	106	107											

Transition Elements

Lanthanides

6	58 **Ce** 140.1	59 **Pr** 140.9	60 **Nd** 144.2	61 **Pm** (145)	62 **Sm** 150.4	63 **Eu** 152.0	64 **Gd** 157.3	65 **Tb** 158.9	66 **Dy** 162.5	67 **Ho** 164.9	68 **Er** 167.3	69 **Tm** 168.9	70 **Yb** 173.0	71 **Lu** 175.0

Actinides

7	90 **Th** 232.0	91 **Pa** (231)	92 **U** 238.0	93 **Np** (244)	94 **Pu** (242)	95 **Am** (243)	96 **Cm** (247)	97 **Bk** (247)	98 **Cf** (251)	99 **Es** (252)	100 **Fm** (257)	101 **Md** (258)	102 **No** (259)	103 **Lr** (260)

*The main groups are numbered I to VIII following accepted practice, but the distinction between A and B groups has not been made because of the confusion that has been created by the differences between European and American practice in this respect. Recently, the American Chemical Society and the International Union of Pure and Applied Chemistry recommended a revised system in which the groups are numbered consecutively from 1 to 18 as shown here. Because it may be some time before this revised numbering system becomes widely accepted we have not adopted it in the main body of the text.

CALC # 24590-WTP-M4C-FRP-00003, REV 0
ATTACHMENT B
PAGE B-2

Attachment C - Steady State Flowsheet Model Stream Reports

CALCULATION SHEET

BY: E. Berrios
DATE: 12/22/05

PROJECT: WTP
JOB NO.: 24590
CALC NO.: 24590-WTP-M4C-FRP-00003
SHEET REV: D
SHEET NO.: C-2

SUBJECT: Integrated Baseline Emissions Report Non-SSFM Represented Constituents Emissions Rate Estimation

	A	B	C	D	E	F	G	H	I	J
1	**Table C-1 FRP01 Stream Report**									
3	Stream Number:		FRP01							
4	Stream Name:		Waste feed from DOE to LAW Feed Receipt							
5	Configuration:		MRQ-05-0049.acmf							
6	Run Date / Time:		12/14/2005 - 1:42:25 PM							
7	Run Data File:		H:\ACM v3.1\MRQ-05-0049\MRQ_05_0049A_Streams.csv							
8										
9	Stream Properties									
10	Variable	Value	Units							
11	Density	1.26E+00	g/cm^3	(does not include solid phase)						
12	Enthalpy	-1.54E+07	BTU/hr							
13	Mass Flow	2.60E+03	Lb/hr							
14		6.23E+04	Lb/day							
15	Volumetric Flow	4.12E+00	GPM	(does not include solid phase)						
16		5.50E-01	ft^3/min	(does not include solid phase)						
17	Molar Flow	1.28E+02	Lbmol/hr							
18	Molecular Weight	1.99E+01	Lb/Lbmol							
19	Pressure	1.00E+03	mbar							
20	Temperature	2.50E+01	C							
21	Na Molarity	4.00E+00	mol/L							
22	pH	1.44E+01	pH							
23	Total TRU	4.24E-04	Ci/L							
24	Total Activity	2.26E+00	Ci/L							
25										
26	Component	Aqueous Comp			Solid Comp	Gaseous (1)		Total Comp		
27	Unit	mol/L	Lb/gal	Lb/day	Lb/day	mol/L	Lb/day	Lb/day	mt/day	g/sec
28	Total	6.19E+01	1.03E+01	6.09E+04	0.00E+00	0.00E+00	0.00E+00	6.09E+04	2.77E+01	3.20E+02
29	Ag^+	3.17E-05	2.85E-05	1.69E-01	0.00E+00	0.00E+00	0.00E+00	1.69E-01	7.69E-05	8.89E-04
30	Al^{+3}	3.84E-01	8.64E-02	5.12E+02	0.00E+00	0.00E+00	0.00E+00	5.12E+02	2.33E-01	2.70E+00
31	As^{+3}	1.40E-04	8.73E-05	5.18E-01	0.00E+00	0.00E+00	0.00E+00	5.18E-01	2.35E-04	2.72E-03
32	B^{+3}	2.32E-03	2.09E-04	1.24E+00	0.00E+00	0.00E+00	0.00E+00	1.24E+00	5.64E-04	6.52E-03
33	Ba^{+2}	2.91E-05	3.34E-05	1.98E-01	0.00E+00	0.00E+00	0.00E+00	1.98E-01	8.99E-05	1.04E-03
34	Bi^{+3}	3.43E-05	5.99E-05	3.55E-01	0.00E+00	0.00E+00	0.00E+00	3.55E-01	1.61E-04	1.87E-03
35	Ca^{+2}	1.98E-03	8.61E-04	3.92E+00	0.00E+00	0.00E+00	0.00E+00	3.92E+00	1.78E-03	2.06E-02
36	Cd^{+2}	5.41E-05	5.07E-05	3.01E-01	0.00E+00	0.00E+00	0.00E+00	3.01E-01	1.37E-04	1.58E-03
37	Ce^{+3}	6.69E-05	7.83E-05	4.64E-01	0.00E+00	0.00E+00	0.00E+00	4.64E-01	2.11E-04	2.44E-03
38	Cl^-	6.17E-02	1.82E-02	1.08E+02	0.00E+00	0.00E+00	0.00E+00	1.08E+02	4.92E-02	5.69E-01
39	CO	0.00E+00	0.00E+00	0.00E+00	0.00E+00	0.00E+00	0.00E+00	0.00E+00	0.00E+00	0.00E+00
40	CO_2	0.00E+00	0.00E+00	0.00E+00	0.00E+00	0.00E+00	0.00E+00	0.00E+00	0.00E+00	0.00E+00
41	CO_3^{-2}	3.07E-01	1.54E-01	9.10E+02	0.00E+00	0.00E+00	0.00E+00	9.10E+02	4.14E-01	4.79E+00
42	Cr^{+3}	9.19E-03	3.99E-03	2.36E+01	0.00E+00	0.00E+00	0.00E+00	2.36E+01	1.07E-02	1.24E-01
43	Cu^{+2}	5.35E-05	2.84E-05	1.68E-01	0.00E+00	0.00E+00	0.00E+00	1.68E-01	7.65E-05	8.85E-04
44	F^-	2.47E-02	3.91E-03	2.32E+01	0.00E+00	0.00E+00	0.00E+00	2.32E+01	1.05E-02	1.22E-01
45	Fe^{+3}	1.39E-03	8.48E-04	3.84E+00	0.00E+00	0.00E+00	0.00E+00	3.84E+00	1.75E-03	2.02E-02
46	H_2O	5.24E+01	7.88E+00	4.68E+04	0.00E+00	0.00E+00	0.00E+00	4.68E+04	2.13E+01	2.46E+02
47	$H_2O(b)$	0.00E+00	0.00E+00	0.00E+00	0.00E+00	0.00E+00	0.00E+00	0.00E+00	0.00E+00	0.00E+00
48	H^+	0.00E+00	0.00E+00	0.00E+00	0.00E+00	0.00E+00	0.00E+00	0.00E+00	0.00E+00	0.00E+00
49	HCL	0.00E+00	0.00E+00	0.00E+00	0.00E+00	0.00E+00	0.00E+00	0.00E+00	0.00E+00	0.00E+00
50	HCO3-	0.00E+00	0.00E+00	0.00E+00	0.00E+00	0.00E+00	0.00E+00	0.00E+00	0.00E+00	0.00E+00
51	H2CO3	0.00E+00	0.00E+00	0.00E+00	0.00E+00	0.00E+00	0.00E+00	0.00E+00	0.00E+00	0.00E+00
52	HF	0.00E+00	0.00E+00	0.00E+00	0.00E+00	0.00E+00	0.00E+00	0.00E+00	0.00E+00	0.00E+00
53	Hg^{+2}	5.60E-05	9.38E-05	5.56E-01	0.00E+00	0.00E+00	0.00E+00	5.56E-01	2.53E-04	2.93E-03
54	HNO_3	0.00E+00	0.00E+00	0.00E+00	0.00E+00	0.00E+00	0.00E+00	0.00E+00	0.00E+00	0.00E+00
55	K^+	1.31E-01	4.28E-02	2.54E+02	0.00E+00	0.00E+00	0.00E+00	2.54E+02	1.15E-01	1.34E+00
56	La^{+3}	1.48E-05	1.72E-05	1.02E-01	0.00E+00	0.00E+00	0.00E+00	1.02E-01	4.64E-05	5.37E-04
57	Li^+	4.20E-04	2.43E-05	1.44E-01	0.00E+00	0.00E+00	0.00E+00	1.44E-01	6.55E-05	7.59E-04
58	Mg^{+2}	4.42E-04	8.96E-05	5.31E-01	0.00E+00	0.00E+00	0.00E+00	5.31E-01	2.41E-04	2.79E-03
59	Mn^{+3}	4.79E-04	2.20E-04	1.30E+00	0.00E+00	0.00E+00	0.00E+00	1.30E+00	5.92E-04	6.85E-03
60	MnO_4^-	0.00E+00	0.00E+00	0.00E+00	0.00E+00	0.00E+00	0.00E+00	0.00E+00	0.00E+00	0.00E+00
61	N_2	0.00E+00	0.00E+00	0.00E+00	0.00E+00	0.00E+00	0.00E+00	0.00E+00	0.00E+00	0.00E+00
62	Na^+	4.00E+00	7.67E-01	4.55E+03	0.00E+00	0.00E+00	0.00E+00	4.55E+03	2.07E+00	2.39E+01
63	NH3	2.82E-03	4.01E-04	2.38E+00	0.00E+00	0.00E+00	0.00E+00	2.38E+00	1.08E-03	1.25E-02
64	NH4+	0.00E+00	4.01E-04	0.00E+00	0.00E+00	0.00E+00	0.00E+00	0.00E+00	0.00E+00	0.00E+00
65	Ni^{+2}	7.32E-04	3.59E-04	2.13E+00	0.00E+00	0.00E+00	0.00E+00	2.13E+00	9.66E-04	1.12E-02
66	NO	0.00E+00	0.00E+00	0.00E+00	0.00E+00	0.00E+00	0.00E+00	0.00E+00	0.00E+00	0.00E+00
67	NO_2	0.00E+00	0.00E+00	0.00E+00	0.00E+00	0.00E+00	0.00E+00	0.00E+00	0.00E+00	0.00E+00
68	NO_2^-	8.34E-01	3.20E-01	1.90E+03	0.00E+00	0.00E+00	0.00E+00	1.90E+03	8.63E-01	9.99E+00
69	NO_3^-	1.13E+00	5.83E-01	3.46E+03	0.00E+00	0.00E+00	0.00E+00	3.46E+03	1.57E+00	1.82E+01
70	O_2	0.00E+00	0.00E+00	0.00E+00	0.00E+00	0.00E+00	0.00E+00	0.00E+00	0.00E+00	0.00E+00
71	O^-	0.00E+00	0.00E+00	0.00E+00	0.00E+00	0.00E+00	0.00E+00	0.00E+00	0.00E+00	0.00E+00
72	OH^-	2.53E+00	3.59E-01	2.13E+03	0.00E+00	0.00E+00	0.00E+00	2.13E+03	9.68E-01	1.12E+01
73	OH(b)$^-$	0.00E+00	0.00E+00	0.00E+00	0.00E+00	0.00E+00	0.00E+00	0.00E+00	0.00E+00	0.00E+00

CALCULATION SHEET

BY: E. Berrios
DATE: 12/22/05

PROJECT. WTP
JOB NO.: 24590
CALC NO.: 24590-WTP-M4C-FRP-00003
SHEET REV: D
SHEET NO.: C-3

SUBJECT: Integrated Baseline Emissions Report Non-SSFM Represented Constituents Emissions Rate Estimation

	A	B	C	D	E	F	G	H	I	J
74	Pb^{+2}	1.98E-04	3.39E-04	2.01E+00	0.00E+00	0.00E+00	0.00E+00	2.01E+00	9.15E-04	1.06E-02
75	Pd^{+2}	1.52E-05	1.35E-05	8.00E-02	0.00E+00	0.00E+00	0.00E+00	8.00E-02	3.64E-05	4.21E-04
76	PO_4^{-3}	1.57E-02	1.24E-02	7.37E+01	0.00E+00	0.00E+00	0.00E+00	7.37E+01	3.35E-02	3.88E-01
77	Resin	0.00E+00	0.00E+00	0.00E+00	0.00E+00	0.00E+00	0.00E+00	0.00E+00	0.00E+00	0.00E+00
78	Rh^{+3}	1.47E-05	1.26E-05	7.48E-02	0.00E+00	0.00E+00	0.00E+00	7.48E-02	3.40E-05	3.94E-04
79	Ru^{+3}	2.18E-05	1.84E-05	1.09E-01	0.00E+00	0.00E+00	0.00E+00	1.09E-01	4.96E-05	5.74E-04
80	S^{-2}	0.00E+00	0.00E+00	0.00E+00	0.00E+00	0.00E+00	0.00E+00	0.00E+00	0.00E+00	0.00E+00
81	SiO2	2.96E-03	1.48E-03	8.80E+00	0.00E+00	0.00E+00	0.00E+00	8.80E+00	4.00E-03	4.63E-02
82	SiO_4^{-4}	0.00E+00	0.00E+00	0.00E+00	0.00E+00	0.00E+00	0.00E+00	0.00E+00	0.00E+00	0.00E+00
83	SO_2	0.00E+00	0.00E+00	0.00E+00	0.00E+00	0.00E+00	0.00E+00	0.00E+00	0.00E+00	0.00E+00
84	SO_4^{-2}	3.74E-02	3.00E-02	1.78E+02	0.00E+00	0.00E+00	0.00E+00	1.78E+02	8.09E-02	9.36E-01
85	Sr^{+2}	6.95E-06	5.08E-06	3.01E-02	0.00E+00	0.00E+00	0.00E+00	3.01E-02	1.37E-05	1.59E-04
86	Sucrose	0.00E+00	0.00E+00	0.00E+00	0.00E+00	0.00E+00	0.00E+00	0.00E+00	0.00E+00	0.00E+00
87	Tl^{+4}	2.44E-05	9.75E-06	5.78E-02	0.00E+00	0.00E+00	0.00E+00	5.78E-02	2.63E-05	3.04E-04
88	Zn^{+2}	9.13E-05	4.98E-05	2.95E-01	0.00E+00	0.00E+00	0.00E+00	2.95E-01	1.34E-04	1.55E-03
89	Zr^{+4}	6.74E-05	5.13E-05	3.04E-01	0.00E+00	0.00E+00	0.00E+00	3.04E-01	1.38E-04	1.60E-03
90										
91	Components	Aqueous Comp			Solid Comp	Gaseous		Total Comp		
92	Unit	mol/L	Lb/gal	Lb/day	Lb/day	mol/L	Lb/day	Lb/day	Mt/day	g/sec
93	Total	1.58E-02	1.16E-02	6.88E+01	0.00E+00	0.00E+00	0.00E+00	6.88E+01	3.13E-02	3.62E-01
94	$C_2O_4^{-2}$	1.58E-02	1.16E-02	6.88E+01	0.00E+00	0.00E+00	0.00E+00	6.88E+01	3.13E-02	3.62E-01
95	Formate	0.00E+00	0.00E+00	0.00E+00	0.00E+00	0.00E+00	0.00E+00	0.00E+00	0.00E+00	0.00E+00
96	Acetate	0.00E+00	0.00E+00	0.00E+00	0.00E+00	0.00E+00	0.00E+00	0.00E+00	0.00E+00	0.00E+00
97	Glycolate	0.00E+00	0.00E+00	0.00E+00	0.00E+00	0.00E+00	0.00E+00	0.00E+00	0.00E+00	0.00E+00
98	IDA	0.00E+00	0.00E+00	0.00E+00	0.00E+00	0.00E+00	0.00E+00	0.00E+00	0.00E+00	0.00E+00
99	Citrate	0.00E+00	0.00E+00	0.00E+00	0.00E+00	0.00E+00	0.00E+00	0.00E+00	0.00E+00	0.00E+00
100	HEDTA	0.00E+00	0.00E+00	0.00E+00	0.00E+00	0.00E+00	0.00E+00	0.00E+00	0.00E+00	0.00E+00
101	EDTA	0.00E+00	0.00E+00	0.00E+00	0.00E+00	0.00E+00	0.00E+00	0.00E+00	0.00E+00	0.00E+00
102										
103	Rad. Comp	Aqueous Rad. Comp			Solids Rad. Comp (1)			Total Rad. Comp (1)		
104	Unit	Ci/L	Ci/day	Lb/day	Ci/L	Ci/day	Lb/day	Ci/L	Ci/day	Lb/day
105	Total	2.26E+00	5.08E+04	2.65E+01	0.00E+00	0.00E+00	0.00E+00	2.26E+00	5.08E+04	2.65E+01
106	^{241}Am	2.98E-04	6.69E+00	4.30E-03	0.00E+00	0.00E+00	0.00E+00	2.98E-04	6.69E+00	4.30E-03
107	^{243}Am	1.95E-07	4.37E-03	4.83E-05	0.00E+00	0.00E+00	0.00E+00	1.95E-07	4.37E-03	4.83E-05
108	^{14}C	6.09E-06	1.37E-01	6.75E-05	0.00E+00	0.00E+00	0.00E+00	6.09E-06	1.37E-01	6.75E-05
109	^{60}Co	4.00E-05	8.97E-01	1.75E-06	0.00E+00	0.00E+00	0.00E+00	4.00E-05	8.97E-01	1.75E-06
110	^{243}Cm	3.22E-08	7.22E-04	3.15E-08	0.00E+00	0.00E+00	0.00E+00	3.22E-08	7.22E-04	3.15E-08
111	^{244}Cm	7.61E-07	1.71E-02	4.65E-07	0.00E+00	0.00E+00	0.00E+00	7.61E-07	1.71E-02	4.65E-07
112	^{137}Cs	2.17E+00	4.87E+04	1.24E+00	0.00E+00	0.00E+00	0.00E+00	2.17E+00	4.87E+04	1.24E+00
113	^{152}Eu	2.24E-06	5.03E-02	6.38E-07	0.00E+00	0.00E+00	0.00E+00	2.24E-06	5.03E-02	6.38E-07
114	^{154}Eu	4.65E-04	1.04E+01	8.51E-05	0.00E+00	0.00E+00	0.00E+00	4.65E-04	1.04E+01	8.51E-05
115	^{155}Eu	1.34E-04	3.02E+00	1.37E-05	0.00E+00	0.00E+00	0.00E+00	1.34E-04	3.02E+00	1.37E-05
116	^{3}H	5.19E-05	1.17E+00	2.67E-07	0.00E+00	0.00E+00	0.00E+00	5.19E-05	1.17E+00	2.67E-07
117	^{129}I	1.86E-07	4.17E-03	5.21E-02	0.00E+00	0.00E+00	0.00E+00	1.86E-07	4.17E-03	5.21E-02
118	^{63}Ni	7.20E-04	1.62E+01	6.27E-04	0.00E+00	0.00E+00	0.00E+00	7.20E-04	1.62E+01	6.27E-04
119	^{237}Np	2.36E-07	5.30E-03	1.66E-02	0.00E+00	0.00E+00	0.00E+00	2.36E-07	5.30E-03	1.66E-02
120	^{238}Pu	1.33E-06	2.99E-02	3.85E-06	0.00E+00	0.00E+00	0.00E+00	1.33E-06	2.99E-02	3.85E-06
121	^{239}Pu	1.84E-05	4.14E-01	1.47E-02	0.00E+00	0.00E+00	0.00E+00	1.84E-05	4.14E-01	1.47E-02
122	^{240}Pu	4.78E-06	1.07E-01	1.04E-03	0.00E+00	0.00E+00	0.00E+00	4.78E-06	1.07E-01	1.04E-03
123	^{241}Pu	1.00E-04	2.25E+00	4.82E-05	0.00E+00	0.00E+00	0.00E+00	1.00E-04	2.25E+00	4.82E-05
124	^{242}Pu	5.06E-10	1.14E-05	6.36E-06	0.00E+00	0.00E+00	0.00E+00	5.06E-10	1.14E-05	6.36E-06
125	^{125}Sb	2.77E-04	6.22E+00	1.32E-05	0.00E+00	0.00E+00	0.00E+00	2.77E-04	6.22E+00	1.32E-05
126	^{151}Sm	3.89E-03	8.74E+01	7.32E-03	0.00E+00	0.00E+00	0.00E+00	3.89E-03	8.74E+01	7.32E-03
127	^{126}Sn	4.41E-06	9.90E-02	1.92E-02	0.00E+00	0.00E+00	0.00E+00	4.41E-06	9.90E-02	1.92E-02
128	^{90}Sr	8.64E-02	1.94E+03	3.10E-02	0.00E+00	0.00E+00	0.00E+00	8.64E-02	1.94E+03	3.10E-02
129	^{99}Tc	7.67E-04	1.72E+01	2.24E+00	0.00E+00	0.00E+00	0.00E+00	7.67E-04	1.72E+01	2.24E+00
130	^{232}Th	7.17E-09	1.61E-04	3.22E+00	0.00E+00	0.00E+00	0.00E+00	7.17E-09	1.61E-04	3.22E+00
131	^{233}U	2.39E-07	5.36E-03	1.23E-03	0.00E+00	0.00E+00	0.00E+00	2.39E-07	5.36E-03	1.23E-03
132	^{234}U	1.70E-07	3.81E-03	1.35E-03	0.00E+00	0.00E+00	0.00E+00	1.70E-07	3.81E-03	1.35E-03
133	^{235}U	6.68E-09	1.50E-04	1.53E-01	0.00E+00	0.00E+00	0.00E+00	6.68E-09	1.50E-04	1.53E-01
134	^{236}U	1.14E-08	2.57E-04	8.76E-03	0.00E+00	0.00E+00	0.00E+00	1.14E-08	2.57E-04	8.76E-03
135	^{238}U	1.32E-07	2.97E-03	1.95E+01	0.00E+00	0.00E+00	0.00E+00	1.32E-07	2.97E-03	1.95E+01
136	(1) All radionuclides in gaseous streams are assumed to exist as solid particulate.									

	A	B	C	D	E	F	G	H	I	J
1	**Table C-2 FRP14 Stream Report**									
3	**Stream Number:**		FRP14							
4	**Stream Name:**		Waste feed from DOE to HLW Feed Receipt							
5	**Configuration:**		MRQ-05-0049.acmf							
6	**Run Date / Time:**		12/14/2005 - 1:42:25 PM							
7	**Run Data File:**		H:\ACM v3.1\MRQ-05-0049\MRQ_05_0049A_Streams.csv							
8										
9	**Stream Properties**									
10	**Variable**	**Value**	**Units**							
11	Density	1.25E+00	g/cm^3	(does not include solid phase)						
12	Enthalpy	-2.66E+07	BTU/hr							
13	Mass Flow	4.76E+03	Lb/hr							
14		1.14E+05	Lb/day							
15	Volumetric Flow	7.21E+00	GPM	(does not include solid phase)						
16		9.63E-01	ft^3/min	(does not include solid phase)						
17	Molar Flow	2.22E+02	Lbmol/hr							
18	Molecular Weight	1.99E+01	Lb/Lbmol							
19	Pressure	1.00E+03	mbar							
20	Temperature	4.90E+01	C							
21	Na Molarity	4.00E+00	mol/L							
22	pH	1.44E+01	pH							
23	Total TRU	2.90E-02	Ci/L							
24	Total Activity	5.16E+00	Ci/L							
25										
26	**Component**	**Aqueous Comp**			**Solid Comp**	**Gaseous (1)**		**Total Comp**		
27	**Unit**	**mol/L**	**Lb/gal**	**Lb/day**	**Lb/day**	**mol/L**	**Lb/day**	**Lb/day**	**mt/day**	**g/sec**
28	**Total**	6.14E+01	1.02E+01	1.06E+05	5.05E+03	0.00E+00	0.00E+00	1.11E+05	5.04E+01	5.83E+02
29	Ag^+	3.17E-05	2.85E-05	2.96E-01	3.50E+00	0.00E+00	0.00E+00	3.80E+00	1.73E-03	2.00E-02
30	Al^{+3}	3.84E-01	8.64E-02	8.97E+02	4.93E+02	0.00E+00	0.00E+00	1.39E+03	6.32E-01	7.31E+00
31	As^{+3}	1.40E-04	8.73E-05	9.06E-01	2.20E-01	0.00E+00	0.00E+00	1.13E+00	5.12E-04	5.92E-03
32	B^{+3}	2.32E-03	2.09E-04	2.17E+00	3.00E+00	0.00E+00	0.00E+00	5.17E+00	2.35E-03	2.72E-02
33	Ba^{+2}	2.91E-05	3.34E-05	3.46E-01	3.20E+00	0.00E+00	0.00E+00	3.55E+00	1.61E-03	1.87E-02
34	Bi^{+3}	3.43E-05	5.99E-05	6.21E-01	1.67E+01	0.00E+00	0.00E+00	1.73E+01	7.85E-03	9.09E-02
35	Ca^{+2}	1.98E-03	6.61E-04	6.86E+00	1.92E+01	0.00E+00	0.00E+00	2.60E+01	1.18E-02	1.37E-01
36	Cd^{+2}	5.41E-05	5.07E-05	5.27E-01	1.17E+01	0.00E+00	0.00E+00	1.23E+01	5.58E-03	6.45E-02
37	Ce^{+3}	6.69E-05	7.83E-05	8.12E-01	4.01E+00	0.00E+00	0.00E+00	4.82E+00	2.19E-03	2.53E-02
38	Cl^-	6.17E-02	1.82E-02	1.89E+02	3.93E+00	0.00E+00	0.00E+00	1.93E+02	8.79E-02	1.02E+00
39	CO	0.00E+00	0.00E+00	0.00E+00	0.00E+00	0.00E+00	0.00E+00	0.00E+00	0.00E+00	0.00E+00
40	CO_2	0.00E+00	0.00E+00	0.00E+00	0.00E+00	0.00E+00	0.00E+00	0.00E+00	0.00E+00	0.00E+00
41	CO_3^{-2}	3.07E-01	1.54E-01	1.59E+03	4.40E+02	0.00E+00	0.00E+00	2.03E+03	9.24E-01	1.07E+01
42	Cr^{+3}	9.19E-03	3.99E-03	4.14E+01	9.96E+00	0.00E+00	0.00E+00	5.13E+01	2.33E-02	2.70E-01
43	Cu^{+2}	5.35E-05	2.84E-05	2.95E-01	1.36E+00	0.00E+00	0.00E+00	1.66E+00	7.53E-04	8.72E-03
44	F^-	2.47E-02	3.91E-03	4.06E+01	7.13E+01	0.00E+00	0.00E+00	1.12E+02	5.08E-02	5.88E-01
45	Fe^{+3}	1.39E-03	6.46E-04	6.72E+00	5.09E+02	0.00E+00	0.00E+00	5.15E+02	2.34E-01	2.71E+00
46	H_2O	5.20E+01	7.81E+00	8.11E+04	0.00E+00	0.00E+00	0.00E+00	8.11E+04	3.68E+01	4.26E+02
47	$H_2O(b)$	0.00E+00	0.00E+00	0.00E+00	0.00E+00	0.00E+00	0.00E+00	0.00E+00	0.00E+00	0.00E+00
48	H^+	0.00E+00	0.00E+00	0.00E+00	0.00E+00	0.00E+00	0.00E+00	0.00E+00	0.00E+00	0.00E+00
49	HCL	0.00E+00	0.00E+00	0.00E+00	0.00E+00	0.00E+00	0.00E+00	0.00E+00	0.00E+00	0.00E+00
50	HCO3-	0.00E+00	0.00E+00	0.00E+00	0.00E+00	0.00E+00	0.00E+00	0.00E+00	0.00E+00	0.00E+00
51	H2CO3	0.00E+00	0.00E+00	0.00E+00	0.00E+00	0.00E+00	0.00E+00	0.00E+00	0.00E+00	0.00E+00
52	HF	0.00E+00	0.00E+00	0.00E+00	0.00E+00	0.00E+00	0.00E+00	0.00E+00	0.00E+00	0.00E+00
53	Hg^{+2}	5.60E-05	9.38E-05	9.74E-01	1.99E+00	0.00E+00	0.00E+00	2.97E+00	1.35E-03	1.56E-02
54	HNO_3	0.00E+00	0.00E+00	0.00E+00	0.00E+00	0.00E+00	0.00E+00	0.00E+00	0.00E+00	0.00E+00
55	K^+	1.31E-01	4.28E-02	4.44E+02	1.01E+01	0.00E+00	0.00E+00	4.54E+02	2.07E-01	2.39E+00
56	La^{+3}	1.48E-05	1.72E-05	1.79E-01	5.94E+00	0.00E+00	0.00E+00	6.12E+00	2.78E-03	3.22E-02
57	Li^+	4.20E-04	2.43E-05	2.52E-01	4.18E-01	0.00E+00	0.00E+00	6.71E-01	3.05E-04	3.53E-03
58	Mg^{+2}	4.42E-04	8.96E-05	9.29E-01	3.93E+00	0.00E+00	0.00E+00	4.86E+00	2.21E-03	2.56E-02
59	Mn^{+3}	4.79E-04	2.20E-04	2.28E+00	4.67E+01	0.00E+00	0.00E+00	4.90E+01	2.23E-02	2.58E-01
60	MnO_4^-	0.00E+00	0.00E+00	0.00E+00	0.00E+00	0.00E+00	0.00E+00	0.00E+00	0.00E+00	0.00E+00
61	N_2	0.00E+00	0.00E+00	0.00E+00	0.00E+00	0.00E+00	0.00E+00	0.00E+00	0.00E+00	0.00E+00
62	Na^+	4.00E+00	7.67E-01	7.95E+03	7.92E+02	0.00E+00	0.00E+00	8.76E+03	3.98E+00	4.61E+01
63	NH3	2.82E-03	4.01E-04	4.16E+00	0.00E+00	0.00E+00	0.00E+00	4.16E+00	1.89E-03	2.19E-02
64	NH4+	0.00E+00	4.01E-04	0.00E+00	0.00E+00	0.00E+00	0.00E+00	0.00E+00	0.00E+00	0.00E+00
65	Ni^{+2}	7.32E-04	3.59E-04	3.72E+00	2.09E+01	0.00E+00	0.00E+00	2.46E+01	1.12E-02	1.29E-01
66	NO	0.00E+00	0.00E+00	0.00E+00	0.00E+00	0.00E+00	0.00E+00	0.00E+00	0.00E+00	0.00E+00
67	NO_2	0.00E+00	0.00E+00	0.00E+00	0.00E+00	0.00E+00	0.00E+00	0.00E+00	0.00E+00	0.00E+00
68	NO_2^-	8.34E-01	3.20E-01	3.32E+03	1.99E+02	0.00E+00	0.00E+00	3.52E+03	1.60E+00	1.85E+01

CALCULATION SHEET

BY: E. Berrios
DATE: 12/22/05

PROJECT: WTP
JOB NO.: 24590
CALC NO.: 24590-WTP-M4C-FRP-00003
SHEET REV: D
SHEET NO : C-5

SUBJECT: Integrated Baseline Emissions Report Non-SSFM Represented Constituents Emissions Rate Estimation

	A	B	C	D	E	F	G	H	I	J
69	NO_3^-	1.13E+00	5.83E-01	6.05E+03	1.53E+02	0.00E+00	0.00E+00	6.21E+03	2.82E+00	3.27E+01
70	O_2	0.00E+00	0.00E+00	0.00E+00	0.00E+00	0.00E+00	0.00E+00	0.00E+00	0.00E+00	0.00E+00
71	$O^=$	0.00E+00	0.00E+00	0.00E+00	0.00E+00	0.00E+00	0.00E+00	0.00E+00	0.00E+00	0.00E+00
72	OH^-	2.53E+00	3.59E-01	3.73E+03	1.82E+03	0.00E+00	0.00E+00	5.54E+03	2.52E+00	2.92E+01
73	$OH(b)^-$	0.00E+00	0.00E+00	0.00E+00	0.00E+00	0.00E+00	0.00E+00	0.00E+00	0.00E+00	0.00E+00
74	Pb^{+2}	1.96E-04	3.39E-04	3.52E+00	2.74E+01	0.00E+00	0.00E+00	3.09E+01	1.40E-02	1.62E-01
75	Pd^{+2}	1.52E-05	1.35E-05	1.40E-01	1.13E+00	0.00E+00	0.00E+00	1.27E+00	5.78E-04	6.69E-03
76	PO_4^{-3}	1.57E-02	1.24E-02	1.29E+02	1.21E+02	0.00E+00	0.00E+00	2.50E+02	1.14E-01	1.32E+00
77	Resin	0.00E+00	0.00E+00	0.00E+00	0.00E+00	0.00E+00	0.00E+00	0.00E+00	0.00E+00	0.00E+00
78	Rh^{+3}	1.47E-05	1.26E-05	1.31E-01	3.58E-01	0.00E+00	0.00E+00	4.88E-01	2.22E-04	2.57E-03
79	Ru^{+3}	2.18E-05	1.84E-05	1.91E-01	2.50E+00	0.00E+00	0.00E+00	2.70E+00	1.23E-03	1.42E-02
80	S^{+6}	0.00E+00	0.00E+00	0.00E+00	0.00E+00	0.00E+00	0.00E+00	0.00E+00	0.00E+00	0.00E+00
81	SiO2	2.96E-03	1.48E-03	1.54E+01	8.20E+01	0.00E+00	0.00E+00	9.75E+01	4.43E-02	5.13E-01
82	SiO_4^{-4}	0.00E+00	0.00E+00	0.00E+00	0.00E+00	0.00E+00	0.00E+00	0.00E+00	0.00E+00	0.00E+00
83	SO_2	0.00E+00	0.00E+00	0.00E+00	0.00E+00	0.00E+00	0.00E+00	0.00E+00	0.00E+00	0.00E+00
84	SO_4^{-2}	3.74E-02	3.00E-02	3.11E+02	4.50E+01	0.00E+00	0.00E+00	3.56E+02	1.62E-01	1.88E+00
85	Sr^{+2}	6.95E-06	5.08E-06	5.28E-02	1.80E+00	0.00E+00	0.00E+00	1.85E+00	8.41E-04	9.74E-03
86	Sucrose	0.00E+00	0.00E+00	0.00E+00	0.00E+00	0.00E+00	0.00E+00	0.00E+00	0.00E+00	0.00E+00
87	Ti^{+4}	2.44E-05	9.75E-06	1.01E-01	7.23E-01	0.00E+00	0.00E+00	8.24E-01	3.74E-04	4.33E-03
88	Zn^{+2}	9.13E-05	4.98E-05	5.17E-01	1.81E+00	0.00E+00	0.00E+00	2.33E+00	1.06E-03	1.23E-02
89	Zr^{+4}	6.74E-05	5.13E-05	5.32E-01	1.24E+02	0.00E+00	0.00E+00	1.25E+02	5.66E-02	6.55E-01
90										
91	Components	Aqueous Comp			Solid Comp	Gaseous		Total Comp		
92	Unit	mol/L	Lb/gal	Lb/day	Lb/day	mol/L	Lb/day	Lb/day	Mt/day	g/sec
93	Total	1.58E-02	1.16E-02	1.20E+02	5.95E+01	0.00E+00	0.00E+00	1.80E+02	8.18E-02	9.47E-01
94	$C_2O_4^{-2}$	1.58E-02	1.16E-02	1.20E+02	5.95E+01	0.00E+00	0.00E+00	1.80E+02	8.18E-02	9.47E-01
95	Formate	0.00E+00	0.00E+00	0.00E+00	0.00E+00	0.00E+00	0.00E+00	0.00E+00	0.00E+00	0.00E+00
96	Acetate	0.00E+00	0.00E+00	0.00E+00	0.00E+00	0.00E+00	0.00E+00	0.00E+00	0.00E+00	0.00E+00
97	Glycolate	0.00E+00	0.00E+00	0.00E+00	0.00E+00	0.00E+00	0.00E+00	0.00E+00	0.00E+00	0.00E+00
98	IDA	0.00E+00	0.00E+00	0.00E+00	0.00E+00	0.00E+00	0.00E+00	0.00E+00	0.00E+00	0.00E+00
99	Citrate	0.00E+00	0.00E+00	0.00E+00	0.00E+00	0.00E+00	0.00E+00	0.00E+00	0.00E+00	0.00E+00
100	HEDTA	0.00E+00	0.00E+00	0.00E+00	0.00E+00	0.00E+00	0.00E+00	0.00E+00	0.00E+00	0.00E+00
101	EDTA	0.00E+00	0.00E+00	0.00E+00	0.00E+00	0.00E+00	0.00E+00	0.00E+00	0.00E+00	0.00E+00
102										
103	Rad. Comp	Aqueous Rad. Comp			Solids Rad. Comp (1)			Total Rad. Comp (1)		
104	Unit	Ci/L	Ci/day	Lb/day	Ci/L	Ci/day	Lb/day	Ci/L	Ci/day	Lb/day
105	Total	2.28E+00	8.88E+04	4.64E+01	2.90E+00	1.14E+05	8.52E+02	5.16E+00	2.03E+05	8.98E+02
106	^{241}Am	2.98E-04	1.17E+01	7.53E-03	2.15E-02	8.46E+02	5.44E-01	2.18E-02	8.58E+02	5.52E-01
107	^{243}Am	1.95E-07	7.65E-03	8.45E-05	1.74E-06	6.84E-02	7.55E-04	1.94E-06	7.60E-02	8.40E-04
108	^{14}C	6.09E-06	2.39E-01	1.18E-04	1.55E-06	6.08E-02	3.00E-05	7.64E-06	3.00E-01	1.48E-04
109	^{60}Co	4.00E-05	1.57E+00	3.06E-06	2.39E-03	9.39E+01	1.83E-04	2.43E-03	9.54E+01	1.86E-04
110	^{243}Cm	3.22E-08	1.26E-03	5.51E-08	3.02E-05	1.19E+00	5.18E-05	3.03E-05	1.19E+00	5.19E-05
111	^{244}Cm	7.61E-07	2.99E-02	8.14E-07	6.87E-04	2.70E+01	7.36E-04	6.88E-04	2.70E+01	7.36E-04
112	^{137}Cs	2.17E+00	8.52E+04	2.16E+00	3.58E-01	1.41E+04	3.58E-01	2.53E+00	9.92E+04	2.52E+00
113	^{152}Eu	2.24E-06	8.81E-02	1.12E-06	1.15E-04	4.51E+00	5.73E-05	1.17E-04	4.60E+00	5.84E-05
114	^{154}Eu	4.65E-04	1.83E+01	1.49E-04	1.24E-02	4.89E+02	3.99E-03	1.29E-02	5.07E+02	4.14E-03
115	^{155}Eu	1.34E-04	5.28E+00	2.40E-05	1.84E-03	7.24E+01	3.29E-04	1.98E-03	7.77E+01	3.53E-04
116	^{3}H	5.19E-05	2.04E+00	4.68E-07	1.55E-05	6.08E-01	1.40E-07	6.74E-05	2.65E+00	6.08E-07
117	^{129}I	1.86E-07	7.30E-03	9.11E-02	6.95E-08	2.73E-03	3.41E-02	2.55E-07	1.00E-02	1.25E-01
118	^{63}Ni	7.20E-04	2.83E+01	1.10E-03	4.14E-04	1.63E+01	6.32E-04	1.13E-03	4.46E+01	1.73E-03
119	^{237}Np	2.36E-07	9.27E-03	2.90E-02	1.77E-05	6.95E-01	2.18E+00	1.79E-05	7.05E-01	2.20E+00
120	^{238}Pu	1.33E-06	5.24E-02	6.74E-06	8.39E-05	3.30E+00	4.24E-04	8.53E-05	3.35E+00	4.31E-04
121	^{239}Pu	1.84E-05	7.24E-01	2.57E-02	7.43E-04	2.92E+01	1.04E+00	7.62E-04	2.99E+01	1.06E+00
122	^{240}Pu	4.78E-06	1.88E-01	1.82E-03	1.96E-04	7.71E+00	7.48E-02	2.01E-04	7.89E+00	7.67E-02
123	^{241}Pu	1.00E-04	3.94E+00	8.43E-05	5.27E-03	2.07E+02	4.43E-03	5.37E-03	2.11E+02	4.51E-03
124	^{242}Pu	5.06E-10	1.99E-05	1.11E-05	1.83E-08	7.18E-04	4.02E-04	1.88E-08	7.38E-04	4.13E-04
125	^{125}Sb	2.77E-04	1.09E+01	2.31E-05	7.67E-03	3.01E+02	6.40E-04	7.95E-03	3.12E+02	6.63E-04
126	^{151}Sm	3.89E-03	1.53E+02	1.28E-02	9.31E-02	3.66E+03	3.06E-01	9.70E-02	3.81E+03	3.19E-01
127	^{126}Sn	4.41E-06	1.73E-01	3.36E-02	3.60E-05	1.41E+00	2.74E-01	4.04E-05	1.59E+00	3.08E-01
128	^{90}Sr	8.64E-02	3.40E+03	5.42E-02	2.39E+00	9.39E+04	1.50E+00	2.48E+00	9.73E+04	1.55E+00
129	^{99}Tc	7.67E-04	3.01E+01	3.92E+00	3.60E-03	1.41E+02	1.84E+01	4.37E-03	1.71E+02	2.23E+01
130	^{232}Th	7.17E-09	2.82E-04	5.64E+00	5.86E-07	2.30E-02	4.61E+02	5.93E-07	2.33E-02	4.66E+02
131	^{233}U	2.39E-07	9.39E-03	2.15E-03	4.79E-05	1.88E+00	4.31E-01	4.82E-05	1.89E+00	4.33E-01
132	^{234}U	1.70E-07	6.66E-03	2.37E-03	2.49E-06	9.79E-02	3.48E-02	2.66E-06	1.05E-01	3.71E-02
133	^{235}U	6.68E-09	2.62E-04	2.68E-01	5.99E-08	2.35E-03	2.40E+00	6.66E-08	2.61E-03	2.67E+00
134	^{236}U	1.14E-08	4.50E-04	1.53E-02	8.23E-08	3.23E-03	1.10E-01	9.37E-08	3.68E-03	1.26E-01
135	^{238}U	1.32E-07	5.20E-03	3.41E+01	1.41E-06	5.54E-02	3.63E+02	1.54E-06	6.06E-02	3.98E+02
136	(1) All radionuclides in gaseous streams are assumed to exist as solid particulate.									

	A	B	C	D	E	F	G	H	I	J
1	**Table C-3 PJV04 Stream Report**									
3	**Stream Number:**		PJV04							
4	**Stream Name:**		Vapor feed to demister							
5	**Configuration:**		MRQ-05-0049.acmf							
6	**Run Date / Time:**		12/14/2005 - 1:42:25 PM							
7	**Run Data File:**		H:\ACM v3.1\MRQ-05-0049\MRQ_05_0049A_Streams.csv							
8										
9	**Stream Properties**									
10	**Variable**	**Value**	**Units**							
11	Density	1.15E-03	g/cm^3	(does not include solid phase)						
12	Enthalpy	-8.69E+06	BTU/hr							
13	Mass Flow	1.71E+05	Lb/hr							
14		4.10E+06	Lb/day							
15	Volumetric Flow	2.96E+05	GPM	(does not include solid phase)						
16		3.96E+04	ft^3/min	(does not include solid phase)						
17	Molar Flow	5.95E+03	Lbmol/hr							
18	Molecular Weight	2.87E+01	Lb/Lbmol							
19	Pressure	9.93E+02	mbar							
20	Temperature	2.50E+01	C							
21	Na Molarity	0.00E+00	mol/L							
22	pH	4.16E+00	pH							
23	Total TRU	2.55E-12	Ci/L							
24	Total Activity	4.31E-10	Ci/L							
25										
26	***Component***	***Aqueous Comp***			***Solid Comp***	***Gaseous (1)***		***Total Comp***		
27	**Unit**	**mol/L**	**Lb/gal**	**Lb/day**	**Lb/day**	**mol/L**	**Lb/day**	**Lb/day**	**mt/day**	**g/sec**
28	**Total**	5.86E-09	9.45E-10	4.03E-01	1.86E-02	4.01E-02	4.10E+06	4.10E+06	1.86E+03	2.16E+04
29	Ag^{+}	1.85E-15	1.87E-15	7.13E-07	1.30E-05	0.00E+00	0.00E+00	1.37E-05	6.21E-09	7.19E-08
30	Al^{+3}	2.25E-11	5.06E-12	2.16E-03	1.79E-03	0.00E+00	0.00E+00	3.95E-03	1.80E-06	2.08E-05
31	As^{+3}	8.18E-15	5.11E-15	2.18E-06	9.12E-07	0.00E+00	0.00E+00	3.09E-06	1.41E-09	1.63E-08
32	B^{+3}	1.36E-13	1.22E-14	5.23E-06	8.60E-05	0.00E+00	0.00E+00	9.12E-05	4.14E-08	4.80E-07
33	Ba^{+2}	1.71E-15	1.95E-15	8.34E-07	1.15E-05	0.00E+00	0.00E+00	1.24E-05	5.63E-09	6.51E-08
34	Bi^{+3}	2.01E-15	3.51E-15	1.50E-06	6.05E-05	0.00E+00	0.00E+00	6.20E-05	2.82E-08	3.26E-07
35	Ca^{+2}	1.42E-13	4.76E-14	2.03E-05	7.75E-05	0.00E+00	0.00E+00	9.78E-05	4.45E-08	5.15E-07
36	Cd^{+2}	3.17E-15	2.97E-15	1.27E-06	4.69E-05	0.00E+00	0.00E+00	4.82E-05	2.19E-08	2.53E-07
37	Ce^{+3}	6.75E-14	7.90E-14	3.37E-05	1.44E-05	0.00E+00	0.00E+00	4.81E-05	2.19E-08	2.53E-07
38	Cl^{-}	3.79E-12	1.12E-12	4.79E-04	1.40E-05	0.00E+00	0.00E+00	4.92E-04	2.24E-07	2.59E-06
39	CO	1.10E-111	2.57E-112	1.10E-103	0.00E+00	0.00E+00	0.00E+00	1.10E-103	4.99E-107	5.78E-106
40	CO_2	1.36E-16	4.99E-17	2.13E-08	0.00E+00	4.20E-16	6.58E-08	8.71E-08	3.96E-11	4.58E-10
41	CO_3^{-2}	1.80E-11	9.01E-12	3.84E-03	1.57E-03	0.00E+00	0.00E+00	5.42E-03	2.46E-06	2.85E-05
42	Cr^{+3}	5.43E-13	2.36E-13	1.01E-04	3.65E-05	0.00E+00	0.00E+00	1.37E-04	6.23E-08	7.21E-07
43	Cu^{+2}	3.13E-15	1.66E-15	7.10E-07	4.89E-06	0.00E+00	0.00E+00	5.60E-06	2.55E-09	2.95E-08
44	F^{-}	1.78E-12	2.83E-13	1.21E-04	2.54E-04	0.00E+00	0.00E+00	3.75E-04	1.71E-07	1.97E-06
45	Fe^{+3}	9.72E-14	4.53E-14	1.93E-05	1.84E-03	0.00E+00	0.00E+00	1.86E-03	8.45E-07	9.78E-06
46	H_2O	5.28E-09	7.93E-10	3.39E-01	0.00E+00	5.63E-04	3.61E+04	3.61E+04	1.64E+01	1.90E+02
47	$H_2O(b)$	0.00E+00	0.00E+00	0.00E+00	0.00E+00	0.00E+00	0.00E+00	0.00E+00	0.00E+00	0.00E+00
48	H^{+}	3.79E-12	3.19E-14	1.36E-05	0.00E+00	0.00E+00	0.00E+00	1.36E-05	6.19E-09	7.17E-08
49	HCL	0.00E+00	0.00E+00	0.00E+00	0.00E+00	0.00E+00	0.00E+00	0.00E+00	0.00E+00	0.00E+00
50	HCO3-	1.87E-15	9.51E-16	4.06E-07	9.36E-22	0.00E+00	0.00E+00	4.06E-07	1.84E-10	2.14E-09
51	H2CO3	0.00E+00	0.00E+00	0.00E+00	0.00E+00	0.00E+00	0.00E+00	0.00E+00	0.00E+00	0.00E+00
52	HF	0.00E+00	0.00E+00	0.00E+00	0.00E+00	0.00E+00	0.00E+00	0.00E+00	0.00E+00	0.00E+00
53	Hg^{+2}	3.28E-15	5.49E-15	2.35E-06	2.90E-05	0.00E+00	0.00E+00	3.14E-05	1.43E-08	1.65E-07
54	HNO_3	0.00E+00	0.00E+00	0.00E+00	0.00E+00	0.00E+00	0.00E+00	0.00E+00	0.00E+00	0.00E+00
55	K^{+}	7.79E-12	2.54E-12	1.08E-03	3.59E-05	0.00E+00	0.00E+00	1.12E-03	5.09E-07	5.89E-06
56	La^{+3}	8.70E-16	1.01E-15	4.30E-07	2.17E-05	0.00E+00	0.00E+00	2.21E-05	1.00E-08	1.16E-07
57	Li^{+}	1.18E-13	8.81E-15	2.91E-06	5.37E-06	0.00E+00	0.00E+00	8.28E-06	3.76E-09	4.36E-08
58	Mg^{+2}	2.59E-14	5.24E-15	2.24E-06	1.60E-05	0.00E+00	0.00E+00	1.82E-05	8.28E-09	9.58E-08
59	Mn^{+3}	2.80E-14	1.29E-14	5.49E-06	1.69E-04	0.00E+00	0.00E+00	1.75E-04	7.93E-08	9.18E-07
60	MnO_4^{-}	0.00E+00	0.00E+00	0.00E+00	0.00E+00	0.00E+00	0.00E+00	0.00E+00	0.00E+00	0.00E+00
61	N_2	5.53E-14	1.29E-14	5.51E-06	0.00E+00	3.12E-02	3.12E+06	3.12E+06	1.42E+03	1.64E+04
62	Na^{+}	2.45E-10	4.71E-11	2.01E-02	2.83E-03	0.00E+00	0.00E+00	2.29E-02	1.04E-05	1.21E-04
63	NH3	1.67E-13	2.38E-14	1.01E-05	0.00E+00	0.00E+00	0.00E+00	1.01E-05	4.61E-09	5.34E-08
64	NH4+	1.25E-14	2.38E-14	8.01E-07	4.12E-23	0.00E+00	0.00E+00	8.01E-07	3.64E-10	4.21E-09
65	Ni^{+2}	4.50E-14	2.20E-14	9.41E-06	7.54E-05	0.00E+00	0.00E+00	8.48E-05	3.86E-08	4.46E-07
66	NO	6.65E-37	1.67E-37	7.11E-29	0.00E+00	0.00E+00	0.00E+00	7.11E-29	3.23E-32	3.74E-31
67	NO_2	9.76E-50	3.75E-50	1.60E-41	0.00E+00	0.00E+00	0.00E+00	1.60E-41	7.27E-45	8.42E-44
68	NO_2^{-}	4.88E-11	1.87E-11	8.00E-03	7.09E-04	0.00E+00	0.00E+00	8.71E-03	3.96E-06	4.58E-05

CALCULATION SHEET

BY: E. Berrios
DATE: 12/22/05

PROJECT: WTP
JOB NO.: 24590
CALC NO.: 24590-WTP-M4C-FRP-00003
SHEET REV: D
SHEET NO.: C-7

SUBJECT: Integrated Baseline Emissions Report Non-SSFM Represented Constituents Emissions Rate Estimation

	A	B	C	D	E	F	G	H	I	J
69	NO_3^-	8.58E-11	4.44E-11	1.90E-02	5.47E-04	0.00E+00	0.00E+00	1.95E-02	8.87E-06	1.03E-04
70	O_2	1.78E-14	4.76E-15	2.03E-06	0.00E+00	8.30E-03	9.46E+05	9.46E+05	4.30E+02	4.98E+03
71	O^-	0.00E+00	0.00E+00	0.00E+00	2.62E-04	0.00E+00	0.00E+00	2.62E-04	1.19E-07	1.38E-06
72	OH^-	1.43E-10	2.03E-11	8.68E-03	6.48E-03	0.00E+00	0.00E+00	1.52E-02	6.89E-06	7.97E-05
73	$OH(b)^-$	2.16E-19	3.07E-20	1.31E-11	6.92E-25	0.00E+00	0.00E+00	1.31E-11	5.96E-15	6.90E-14
74	Pb^{+2}	1.15E-14	1.99E-14	8.49E-06	9.90E-05	0.00E+00	0.00E+00	1.07E-04	4.88E-08	5.65E-07
75	Pd^{+2}	8.90E-16	7.90E-16	3.37E-07	4.06E-06	0.00E+00	0.00E+00	4.40E-06	2.00E-09	2.31E-08
76	PO_4^{-3}	9.18E-13	7.28E-13	3.11E-04	4.47E-04	0.00E+00	0.00E+00	7.57E-04	3.44E-07	3.98E-06
77	Resin	0.00E+00	0.00E+00	0.00E+00	0.00E+00	0.00E+00	0.00E+00	0.00E+00	0.00E+00	0.00E+00
78	Rh^{+3}	8.60E-16	7.39E-16	3.16E-07	1.32E-06	0.00E+00	0.00E+00	1.63E-06	7.41E-10	8.58E-09
79	Ru^{+3}	1.28E-15	1.08E-15	4.61E-07	1.23E-05	0.00E+00	0.00E+00	1.27E-05	5.78E-09	6.69E-08
80	S^{-8}	0.00E+00	0.00E+00	0.00E+00	3.67E-22	0.00E+00	0.00E+00	3.67E-22	1.67E-25	1.93E-24
81	SiO2	1.73E-13	8.69E-14	3.71E-05	4.46E-04	0.00E+00	0.00E+00	4.83E-04	2.19E-07	2.54E-06
82	SiO_4^{-4}	9.10E-26	7.00E-26	2.99E-17	7.91E-12	0.00E+00	0.00E+00	7.91E-12	3.59E-15	4.16E-14
83	SO_2	1.40E-52	7.48E-53	3.19E-44	0.00E+00	0.00E+00	0.00E+00	3.19E-44	1.45E-47	1.68E-46
84	SO_4^{-2}	2.19E-12	1.76E-12	7.50E-04	1.61E-04	0.00E+00	0.00E+00	9.11E-04	4.14E-07	4.79E-06
85	Sr^{+2}	4.57E-16	3.34E-16	1.43E-07	6.44E-06	0.00E+00	0.00E+00	6.59E-06	2.99E-09	3.47E-08
86	Sucrose	0.00E+00	0.00E+00	0.00E+00	0.00E+00	0.00E+00	0.00E+00	0.00E+00	0.00E+00	0.00E+00
87	Ti^{+4}	1.43E-15	5.71E-16	2.44E-07	2.73E-06	0.00E+00	0.00E+00	2.98E-06	1.35E-09	1.57E-08
88	Zn^{+2}	5.35E-15	2.92E-15	1.25E-06	2.00E-05	0.00E+00	0.00E+00	2.13E-05	9.68E-09	1.12E-07
89	Zr^{+4}	3.94E-15	3.00E-15	1.28E-06	4.48E-04	0.00E+00	0.00E+00	4.49E-04	2.04E-07	2.36E-06
90										
91	**Components**	**Aqueous Comp**			**Solid Comp**	**Gaseous**		**Total Comp**		
92	**Unit**	**mol/L**	**Lb/gal**	**Lb/day**	**Lb/day**	**mol/L**	**Lb/day**	**Lb/day**	**Mt/day**	**g/sec**
93	**Total**	9.07E-13	6.66E-13	2.84E-04	2.24E-03	0.00E+00	0.00E+00	2.52E-03	1.15E-06	1.33E-05
94	$C_2O_4^{-2}$	9.07E-13	6.66E-13	2.84E-04	2.24E-03	0.00E+00	0.00E+00	2.52E-03	1.15E-06	1.33E-05
95	Formate	4.02E-25	1.51E-25	6.44E-17	3.08E-13	0.00E+00	0.00E+00	3.08E-13	1.40E-16	1.82E-15
96	Acetate	3.11E-25	1.53E-25	6.55E-17	3.13E-13	0.00E+00	0.00E+00	3.13E-13	1.42E-16	1.65E-15
97	Glycolate	2.07E-24	1.30E-24	5.54E-16	1.54E-13	0.00E+00	0.00E+00	1.54E-13	7.02E-17	8.13E-16
98	IDA	1.06E-24	1.18E-24	5.03E-16	3.93E-13	0.00E+00	0.00E+00	3.93E-13	1.79E-16	2.07E-15
99	Citrate	9.69E-26	1.55E-25	6.64E-17	3.37E-13	0.00E+00	0.00E+00	3.37E-13	1.53E-16	1.77E-15
100	HEDTA	4.54E-25	1.05E-24	4.50E-16	2.76E-13	0.00E+00	0.00E+00	2.77E-13	1.26E-16	1.46E-15
101	EDTA	5.46E-26	1.33E-25	5.68E-17	2.97E-13	0.00E+00	0.00E+00	2.97E-13	1.35E-16	1.56E-15
102										
103	**Rad. Comp**	**Aqueous Rad. Comp**			**Solids Rad. Comp (1)**			**Total Rad. Comp (1)**		
104	**Unit**	**Ci/L**	**Ci/day**	**Lb/day**	**Ci/L**	**Ci/day**	**Lb/day**	**Ci/L**	**Ci/day**	**Lb/day**
105	**Total**	1.66E-10	2.69E-01	1.13E-04	2.65E-10	4.28E-01	3.12E-03	4.31E-10	6.96E-01	3.23E-03
106	^{241}Am	1.75E-14	2.82E-05	1.61E-08	1.90E-12	3.08E-03	1.98E-06	1.92E-12	3.10E-03	2.00E-06
107	^{243}Am	1.14E-17	1.84E-08	2.04E-10	1.54E-16	2.49E-07	2.75E-09	1.65E-16	2.67E-07	2.95E-09
108	^{14}C	3.57E-16	5.76E-07	2.85E-10	1.34E-16	2.17E-07	1.07E-10	4.91E-16	7.93E-07	3.92E-10
109	^{60}Co	2.34E-15	3.78E-06	7.37E-12	2.10E-13	3.40E-04	6.62E-10	2.13E-13	3.44E-04	6.69E-10
110	^{243}Cm	1.88E-18	3.04E-09	1.33E-13	2.66E-15	4.30E-06	1.88E-10	2.66E-15	4.30E-06	1.88E-10
111	^{244}Cm	4.46E-17	7.20E-08	1.96E-12	6.05E-14	9.77E-05	2.66E-09	6.05E-14	9.78E-05	2.66E-09
112	^{137}Cs	1.60E-10	2.59E-01	6.58E-06	4.31E-11	6.96E-02	1.77E-06	2.03E-10	3.29E-01	8.34E-06
113	^{152}Eu	1.31E-16	2.12E-07	2.69E-12	1.01E-14	1.64E-05	2.07E-10	1.03E-14	1.66E-05	2.10E-10
114	^{154}Eu	2.72E-14	4.40E-05	3.59E-10	1.10E-12	1.77E-03	1.45E-08	1.12E-12	1.82E-03	1.48E-08
115	^{155}Eu	7.87E-15	1.27E-05	5.77E-11	1.62E-13	2.62E-04	1.19E-09	1.70E-13	2.75E-04	1.25E-09
116	^{3}H	2.18E-15	3.53E-06	8.10E-13	3.48E-15	5.63E-06	1.29E-12	5.67E-15	9.16E-06	2.10E-12
117	^{129}I	1.09E-17	1.76E-08	2.19E-07	7.02E-18	1.13E-08	1.42E-07	1.79E-17	2.89E-08	3.61E-07
118	^{63}Ni	4.22E-14	6.81E-05	2.64E-09	3.65E-14	5.90E-05	2.29E-09	7.87E-14	1.27E-04	4.93E-09
119	^{237}Np	1.38E-17	2.23E-08	8.99E-08	1.56E-15	2.52E-06	7.87E-06	1.57E-15	2.54E-06	7.94E-06
120	^{238}Pu	7.81E-17	1.26E-07	1.62E-11	7.39E-15	1.19E-05	1.54E-09	7.47E-15	1.21E-05	1.55E-09
121	^{239}Pu	1.08E-15	1.75E-06	6.20E-08	6.55E-14	1.06E-04	3.76E-06	6.66E-14	1.08E-04	3.82E-06
122	^{240}Pu	2.80E-16	4.52E-07	4.39E-09	1.73E-14	2.79E-05	2.71E-07	1.76E-14	2.84E-05	2.76E-07
123	^{241}Pu	5.87E-15	9.49E-06	2.03E-10	4.64E-13	7.49E-04	1.60E-08	4.70E-13	7.59E-04	1.62E-08
124	^{242}Pu	2.96E-20	4.79E-11	2.68E-11	1.59E-18	2.57E-09	1.44E-09	1.62E-18	2.62E-09	1.47E-09
125	^{125}Sb	1.62E-14	2.62E-05	5.58E-11	6.73E-13	1.09E-03	2.31E-09	6.89E-13	1.11E-03	2.37E-09
126	^{151}Sm	2.28E-13	3.69E-04	3.09E-08	8.14E-12	1.32E-02	1.10E-06	8.37E-12	1.35E-02	1.13E-06
127	^{126}Sn	2.58E-16	4.17E-07	8.10E-08	3.15E-15	5.09E-06	9.88E-07	3.41E-15	5.51E-06	1.07E-06
128	^{90}Sr	5.57E-12	9.00E-03	1.44E-07	2.08E-10	3.36E-01	5.37E-06	2.14E-10	3.45E-01	5.51E-06
129	^{99}Tc	4.49E-14	7.26E-05	9.44E-06	4.83E-13	7.81E-04	1.02E-04	5.28E-13	8.54E-04	1.11E-04
130	^{232}Th	4.20E-19	6.78E-10	1.36E-05	5.15E-17	8.33E-08	1.67E-03	5.20E-17	8.40E-08	1.68E-03
131	^{233}U	1.40E-17	2.26E-08	5.17E-09	4.22E-15	6.82E-06	1.56E-06	4.23E-15	6.84E-06	1.56E-06
132	^{234}U	9.93E-18	1.61E-08	5.70E-09	2.19E-16	3.54E-07	1.26E-07	2.29E-16	3.71E-07	1.32E-07
133	^{235}U	3.91E-19	6.32E-10	6.45E-07	5.27E-18	8.52E-09	6.69E-06	5.66E-18	9.15E-09	9.34E-06
134	^{236}U	6.70E-19	1.08E-09	3.69E-08	7.24E-18	1.17E-08	3.99E-07	7.91E-18	1.28E-08	4.36E-07
135	^{238}U	7.76E-18	1.25E-08	8.22E-05	1.24E-16	2.01E-07	1.32E-03	1.32E-16	2.13E-07	1.40E-03
136	(1) All radionuclides in gaseous streams are assumed to exist as solid particulate.									

	A	B	C	D	E	F	G	H	I	J
1	**Table C-4 HFP01 Stream Report**									
3	**Stream Number:**		HFP01							
4	**Stream Name:**		HLW blended glass formers							
5	**Configuration:**		MRQ-05-0049.acmf							
6	**Run Date / Time:**		12/14/2005 - 1:42:25 PM							
7	**Run Data File:**		H:\ACM v3.1\MRQ-05-0049\MRQ_05_0049A_Streams.csv							
8										
9	**Stream Properties**									
10	**Variable**	**Value**	**Units**							
11	Density	9.97E-01	g/cm^3	(does not include solid phase)						
12	Enthalpy	-1.44E+05	BTU/hr							
13	Mass Flow	4.43E+02	Lb/hr							
14		1.06E+04	Lb/day							
15	Volumetric Flow	4.23E-02	GPM	(does not include solid phase)						
16		5.65E-03	ft^3/min	(does not include solid phase)						
17	Molar Flow	1.17E+00	Lbmol/hr							
18	Molecular Weight	1.80E+01	Lb/Lbmol							
19	Pressure	1.00E+03	mbar							
20	Temperature	2.50E+01	C							
21	Na Molarity	0.00E+00	mol/L							
22	pH	7.00E+00	pH							
23	Total TRU	0.00E+00	Ci/L							
24	Total Activity	3.73E-09	Ci/L							
25										
26	**Component**	**Aqueous Comp**			**Solid Comp**	**Gaseous (1)**		**Total Comp**		
27	**Unit**	**mol/L**	**Lb/gal**	**Lb/day**	**Lb/day**	**mol/L**	**Lb/day**	**Lb/day**	**mt/day**	**g/sec**
28	**Total**	5.54E+01	8.32E+00	5.07E+02	1.01E+04	0.00E+00	0.00E+00	1.06E+04	4.84E+00	5.60E+01
29	Ag^{+}	0.00E+00	0.00E+00	0.00E+00	0.00E+00	0.00E+00	0.00E+00	0.00E+00	0.00E+00	0.00E+00
30	Al^{+3}	0.00E+00	0.00E+00	0.00E+00	1.02E+02	0.00E+00	0.00E+00	1.02E+02	4.62E-02	5.34E-01
31	As^{+3}	0.00E+00	0.00E+00	0.00E+00	0.00E+00	0.00E+00	0.00E+00	0.00E+00	0.00E+00	0.00E+00
32	B^{+3}	0.00E+00	0.00E+00	0.00E+00	3.24E+02	0.00E+00	0.00E+00	3.24E+02	1.47E-01	1.70E+00
33	Ba^{+2}	0.00E+00	0.00E+00	0.00E+00	0.00E+00	0.00E+00	0.00E+00	0.00E+00	0.00E+00	0.00E+00
34	Bi^{+3}	0.00E+00	0.00E+00	0.00E+00	0.00E+00	0.00E+00	0.00E+00	0.00E+00	0.00E+00	0.00E+00
35	Ca^{+2}	0.00E+00	0.00E+00	0.00E+00	4.74E-01	0.00E+00	0.00E+00	4.74E-01	2.15E-04	2.49E-03
36	Cd^{+2}	0.00E+00	0.00E+00	0.00E+00	8.18E-03	0.00E+00	0.00E+00	8.18E-03	3.72E-06	4.30E-05
37	Ce^{+3}	0.00E+00	0.00E+00	0.00E+00	0.00E+00	0.00E+00	0.00E+00	0.00E+00	0.00E+00	0.00E+00
38	Cl^{-}	1.83E-02	5.42E-03	3.30E-01	0.00E+00	0.00E+00	0.00E+00	3.30E-01	1.50E-04	1.74E-03
39	CO	0.00E+00	0.00E+00	0.00E+00	0.00E+00	0.00E+00	0.00E+00	0.00E+00	0.00E+00	0.00E+00
40	CO_2	0.00E+00	0.00E+00	0.00E+00	0.00E+00	0.00E+00	0.00E+00	0.00E+00	0.00E+00	0.00E+00
41	CO_3^{-2}	0.00E+00	0.00E+00	0.00E+00	6.55E+02	0.00E+00	0.00E+00	6.55E+02	2.98E-01	3.44E+00
42	Cr^{+3}	0.00E+00	0.00E+00	0.00E+00	0.00E+00	0.00E+00	0.00E+00	0.00E+00	0.00E+00	0.00E+00
43	Cu^{+2}	0.00E+00	0.00E+00	0.00E+00	0.00E+00	0.00E+00	0.00E+00	0.00E+00	0.00E+00	0.00E+00
44	F^{-}	0.00E+00	0.00E+00	0.00E+00	0.00E+00	0.00E+00	0.00E+00	0.00E+00	0.00E+00	0.00E+00
45	Fe^{+3}	0.00E+00	0.00E+00	0.00E+00	6.67E+01	0.00E+00	0.00E+00	6.67E+01	3.03E-02	3.51E-01
46	H_2O	5.53E+01	8.32E+00	5.07E+02	0.00E+00	0.00E+00	0.00E+00	5.07E+02	2.30E-01	2.67E+00
47	$H_2O(b)$	0.00E+00	0.00E+00	0.00E+00	1.38E+02	0.00E+00	0.00E+00	1.38E+02	6.27E-02	7.26E-01
48	H^{+}	1.00E-07	8.41E-10	5.12E-08	0.00E+00	0.00E+00	0.00E+00	5.12E-08	2.33E-11	2.70E-10
49	HCL	0.00E+00	0.00E+00	0.00E+00	0.00E+00	0.00E+00	0.00E+00	0.00E+00	0.00E+00	0.00E+00
50	HCO3-	0.00E+00	0.00E+00	0.00E+00	0.00E+00	0.00E+00	0.00E+00	0.00E+00	0.00E+00	0.00E+00
51	H2CO3	0.00E+00	0.00E+00	0.00E+00	0.00E+00	0.00E+00	0.00E+00	0.00E+00	0.00E+00	0.00E+00
52	HF	0.00E+00	0.00E+00	0.00E+00	0.00E+00	0.00E+00	0.00E+00	0.00E+00	0.00E+00	0.00E+00
53	Hg^{+2}	0.00E+00	0.00E+00	0.00E+00	0.00E+00	0.00E+00	0.00E+00	0.00E+00	0.00E+00	0.00E+00
54	HNO_3	0.00E+00	0.00E+00	0.00E+00	0.00E+00	0.00E+00	0.00E+00	0.00E+00	0.00E+00	0.00E+00
55	K^{+}	0.00E+00	0.00E+00	0.00E+00	1.04E+00	0.00E+00	0.00E+00	1.04E+00	4.73E-04	5.47E-03
56	La^{+3}	0.00E+00	0.00E+00	0.00E+00	0.00E+00	0.00E+00	0.00E+00	0.00E+00	0.00E+00	0.00E+00
57	Li^{+}	0.00E+00	0.00E+00	0.00E+00	1.39E+02	0.00E+00	0.00E+00	1.39E+02	6.32E-02	7.32E-01
58	Mg^{+2}	0.00E+00	0.00E+00	0.00E+00	8.76E-01	0.00E+00	0.00E+00	8.76E-01	3.98E-04	4.61E-03
59	Mn^{+3}	0.00E+00	0.00E+00	0.00E+00	8.53E-02	0.00E+00	0.00E+00	8.53E-02	3.88E-05	4.49E-04
60	MnO_4^{-}	0.00E+00	0.00E+00	0.00E+00	0.00E+00	0.00E+00	0.00E+00	0.00E+00	0.00E+00	0.00E+00
61	N_2	0.00E+00	0.00E+00	0.00E+00	0.00E+00	0.00E+00	0.00E+00	0.00E+00	0.00E+00	0.00E+00
62	Na^{+}	0.00E+00	0.00E+00	0.00E+00	7.53E+01	0.00E+00	0.00E+00	7.53E+01	3.42E-02	3.96E-01
63	NH3	0.00E+00	0.00E+00	0.00E+00	0.00E+00	0.00E+00	0.00E+00	0.00E+00	0.00E+00	0.00E+00
64	NH4+	0.00E+00	0.00E+00	0.00E+00	0.00E+00	0.00E+00	0.00E+00	0.00E+00	0.00E+00	0.00E+00
65	Ni^{+2}	0.00E+00	0.00E+00	0.00E+00	0.00E+00	0.00E+00	0.00E+00	0.00E+00	0.00E+00	0.00E+00
66	NO	0.00E+00	0.00E+00	0.00E+00	0.00E+00	0.00E+00	0.00E+00	0.00E+00	0.00E+00	0.00E+00
67	NO_2	0.00E+00	0.00E+00	0.00E+00	0.00E+00	0.00E+00	0.00E+00	0.00E+00	0.00E+00	0.00E+00
68	NO_2^{-}	0.00E+00	0.00E+00	0.00E+00	0.00E+00	0.00E+00	0.00E+00	0.00E+00	0.00E+00	0.00E+00

CALCULATION SHEET

BY: E. Bernos
DATE: 12/22/05

PROJECT: WTP
JOB NO.: 24590
CALC NO.: 24590-WTP-M4C-FRP-00003
SHEET REV: D
SHEET NO.: C-9

SUBJECT: Integrated Baseline Emissions Report Non-SSFM Represented Constituents Emissions Rate Estimation

	A	B	C	D	E	F	G	H	I	J
69	NO_3^-	0.00E+00	0.00E+00	0.00E+00	0.00E+00	0.00E+00	0.00E+00	0.00E+00	0.00E+00	0.00E+00
70	O_2	0.00E+00	0.00E+00	0.00E+00	0.00E+00	0.00E+00	0.00E+00	0.00E+00	0.00E+00	0.00E+00
71	O^-	0.00E+00	0.00E+00	0.00E+00	9.09E+02	0.00E+00	0.00E+00	9.09E+02	4.13E-01	4.78E+00
72	OH^-	1.00E-07	1.42E-08	8.64E-07	1.36E+03	0.00E+00	0.00E+00	1.36E+03	6.19E-01	7.17E+00
73	$OH(b)^-$	0.00E+00	0.00E+00	0.00E+00	0.00E+00	0.00E+00	0.00E+00	0.00E+00	0.00E+00	0.00E+00
74	Pb^{+2}	0.00E+00	0.00E+00	0.00E+00	1.73E-03	0.00E+00	0.00E+00	1.73E-03	7.88E-07	9.12E-06
75	Pd^{+2}	0.00E+00	0.00E+00	0.00E+00	0.00E+00	0.00E+00	0.00E+00	0.00E+00	0.00E+00	0.00E+00
76	PO_4^{-3}	0.00E+00	0.00E+00	0.00E+00	3.36E-01	0.00E+00	0.00E+00	3.36E-01	1.53E-04	1.77E-03
77	Resin	0.00E+00	0.00E+00	0.00E+00	0.00E+00	0.00E+00	0.00E+00	0.00E+00	0.00E+00	0.00E+00
78	Rh^{+3}	0.00E+00	0.00E+00	0.00E+00	0.00E+00	0.00E+00	0.00E+00	0.00E+00	0.00E+00	0.00E+00
79	Ru^{+3}	0.00E+00	0.00E+00	0.00E+00	0.00E+00	0.00E+00	0.00E+00	0.00E+00	0.00E+00	0.00E+00
80	S^{+6}	0.00E+00	0.00E+00	0.00E+00	0.00E+00	0.00E+00	0.00E+00	0.00E+00	0.00E+00	0.00E+00
81	SiO2	0.00E+00	0.00E+00	0.00E+00	6.19E+03	0.00E+00	0.00E+00	6.19E+03	2.81E+00	3.25E+01
82	SiO_4^{-4}	0.00E+00	0.00E+00	0.00E+00	0.00E+00	0.00E+00	0.00E+00	0.00E+00	0.00E+00	0.00E+00
83	SO_2	0.00E+00	0.00E+00	0.00E+00	0.00E+00	0.00E+00	0.00E+00	0.00E+00	0.00E+00	0.00E+00
84	SO_4^{-2}	0.00E+00	0.00E+00	0.00E+00	8.88E-01	0.00E+00	0.00E+00	8.88E-01	4.04E-04	4.67E-03
85	Sr^{+2}	0.00E+00	0.00E+00	0.00E+00	0.00E+00	0.00E+00	0.00E+00	0.00E+00	0.00E+00	0.00E+00
86	Sucrose	0.00E+00	0.00E+00	0.00E+00	0.00E+00	0.00E+00	0.00E+00	0.00E+00	0.00E+00	0.00E+00
87	Ti^{+4}	0.00E+00	0.00E+00	0.00E+00	2.33E+00	0.00E+00	0.00E+00	2.33E+00	1.06E-03	1.23E-02
88	Zn^{+2}	0.00E+00	0.00E+00	0.00E+00	1.50E+02	0.00E+00	0.00E+00	1.50E+02	6.82E-02	7.90E-01
89	Zr^{+4}	0.00E+00	0.00E+00	0.00E+00	2.12E+01	0.00E+00	0.00E+00	2.12E+01	9.63E-03	1.12E-01
90										
91	Components	Aqueous Comp			Solid Comp	Gaseous		Total Comp		
92	Unit	mol/L	Lb/gal	Lb/day	Lb/day	mol/L	Lb/day	Lb/day	Mt/day	g/sec
93	Total	0.00E+00	0.00E+00	0.00E+00	0.00E+00	0.00E+00	0.00E+00	0.00E+00	0.00E+00	0.00E+00
94	$C_2O_4^{-2}$	0.00E+00	0.00E+00	0.00E+00	0.00E+00	0.00E+00	0.00E+00	0.00E+00	0.00E+00	0.00E+00
95	Formate	0.00E+00	0.00E+00	0.00E+00	0.00E+00	0.00E+00	0.00E+00	0.00E+00	0.00E+00	0.00E+00
96	Acetate	0.00E+00	0.00E+00	0.00E+00	0.00E+00	0.00E+00	0.00E+00	0.00E+00	0.00E+00	0.00E+00
97	Glycolate	0.00E+00	0.00E+00	0.00E+00	0.00E+00	0.00E+00	0.00E+00	0.00E+00	0.00E+00	0.00E+00
98	IDA	0.00E+00	0.00E+00	0.00E+00	0.00E+00	0.00E+00	0.00E+00	0.00E+00	0.00E+00	0.00E+00
99	Citrate	0.00E+00	0.00E+00	0.00E+00	0.00E+00	0.00E+00	0.00E+00	0.00E+00	0.00E+00	0.00E+00
100	HEDTA	0.00E+00	0.00E+00	0.00E+00	0.00E+00	0.00E+00	0.00E+00	0.00E+00	0.00E+00	0.00E+00
101	EDTA	0.00E+00	0.00E+00	0.00E+00	0.00E+00	0.00E+00	0.00E+00	0.00E+00	0.00E+00	0.00E+00
102										
103	Rad. Comp	Aqueous Rad. Comp			Solids Rad. Comp (1)			Total Rad. Comp (1)		
104	Unit	Ci/L	Ci/day	Lb/day	Ci/L	Ci/day	Lb/day	Ci/L	Ci/day	Lb/day
105	Total	0.00E+00	0.00E+00	0.00E+00	3.73E-09	8.60E-07	1.72E-02	3.73E-09	8.60E-07	1.72E-02
106	^{241}Am	0.00E+00	0.00E+00	0.00E+00	0.00E+00	0.00E+00	0.00E+00	0.00E+00	0.00E+00	0.00E+00
107	^{243}Am	0.00E+00	0.00E+00	0.00E+00	0.00E+00	0.00E+00	0.00E+00	0.00E+00	0.00E+00	0.00E+00
108	^{14}C	0.00E+00	0.00E+00	0.00E+00	0.00E+00	0.00E+00	0.00E+00	0.00E+00	0.00E+00	0.00E+00
109	^{60}Co	0.00E+00	0.00E+00	0.00E+00	0.00E+00	0.00E+00	0.00E+00	0.00E+00	0.00E+00	0.00E+00
110	^{243}Cm	0.00E+00	0.00E+00	0.00E+00	0.00E+00	0.00E+00	0.00E+00	0.00E+00	0.00E+00	0.00E+00
111	^{244}Cm	0.00E+00	0.00E+00	0.00E+00	0.00E+00	0.00E+00	0.00E+00	0.00E+00	0.00E+00	0.00E+00
112	^{137}Cs	0.00E+00	0.00E+00	0.00E+00	0.00E+00	0.00E+00	0.00E+00	0.00E+00	0.00E+00	0.00E+00
113	^{152}Eu	0.00E+00	0.00E+00	0.00E+00	0.00E+00	0.00E+00	0.00E+00	0.00E+00	0.00E+00	0.00E+00
114	^{154}Eu	0.00E+00	0.00E+00	0.00E+00	0.00E+00	0.00E+00	0.00E+00	0.00E+00	0.00E+00	0.00E+00
115	^{155}Eu	0.00E+00	0.00E+00	0.00E+00	0.00E+00	0.00E+00	0.00E+00	0.00E+00	0.00E+00	0.00E+00
116	^{3}H	0.00E+00	0.00E+00	0.00E+00	0.00E+00	0.00E+00	0.00E+00	0.00E+00	0.00E+00	0.00E+00
117	^{129}I	0.00E+00	0.00E+00	0.00E+00	0.00E+00	0.00E+00	0.00E+00	0.00E+00	0.00E+00	0.00E+00
118	^{63}Ni	0.00E+00	0.00E+00	0.00E+00	0.00E+00	0.00E+00	0.00E+00	0.00E+00	0.00E+00	0.00E+00
119	^{237}Np	0.00E+00	0.00E+00	0.00E+00	0.00E+00	0.00E+00	0.00E+00	0.00E+00	0.00E+00	0.00E+00
120	^{238}Pu	0.00E+00	0.00E+00	0.00E+00	0.00E+00	0.00E+00	0.00E+00	0.00E+00	0.00E+00	0.00E+00
121	^{239}Pu	0.00E+00	0.00E+00	0.00E+00	0.00E+00	0.00E+00	0.00E+00	0.00E+00	0.00E+00	0.00E+00
122	^{240}Pu	0.00E+00	0.00E+00	0.00E+00	0.00E+00	0.00E+00	0.00E+00	0.00E+00	0.00E+00	0.00E+00
123	^{241}Pu	0.00E+00	0.00E+00	0.00E+00	0.00E+00	0.00E+00	0.00E+00	0.00E+00	0.00E+00	0.00E+00
124	^{242}Pu	0.00E+00	0.00E+00	0.00E+00	0.00E+00	0.00E+00	0.00E+00	0.00E+00	0.00E+00	0.00E+00
125	^{125}Sb	0.00E+00	0.00E+00	0.00E+00	0.00E+00	0.00E+00	0.00E+00	0.00E+00	0.00E+00	0.00E+00
126	^{151}Sm	0.00E+00	0.00E+00	0.00E+00	0.00E+00	0.00E+00	0.00E+00	0.00E+00	0.00E+00	0.00E+00
127	^{126}Sn	0.00E+00	0.00E+00	0.00E+00	0.00E+00	0.00E+00	0.00E+00	0.00E+00	0.00E+00	0.00E+00
128	^{90}Sr	0.00E+00	0.00E+00	0.00E+00	0.00E+00	0.00E+00	0.00E+00	0.00E+00	0.00E+00	0.00E+00
129	^{99}Tc	0.00E+00	0.00E+00	0.00E+00	0.00E+00	0.00E+00	0.00E+00	0.00E+00	0.00E+00	0.00E+00
130	^{232}Th	0.00E+00	0.00E+00	0.00E+00	3.73E-09	8.60E-07	1.72E-02	3.73E-09	8.60E-07	1.72E-02
131	^{233}U	0.00E+00	0.00E+00	0.00E+00	0.00E+00	0.00E+00	0.00E+00	0.00E+00	0.00E+00	0.00E+00
132	^{234}U	0.00E+00	0.00E+00	0.00E+00	0.00E+00	0.00E+00	0.00E+00	0.00E+00	0.00E+00	0.00E+00
133	^{235}U	0.00E+00	0.00E+00	0.00E+00	0.00E+00	0.00E+00	0.00E+00	0.00E+00	0.00E+00	0.00E+00
134	^{236}U	0.00E+00	0.00E+00	0.00E+00	0.00E+00	0.00E+00	0.00E+00	0.00E+00	0.00E+00	0.00E+00
135	^{238}U	0.00E+00	0.00E+00	0.00E+00	0.00E+00	0.00E+00	0.00E+00	0.00E+00	0.00E+00	0.00E+00
136	(1) All radionuclides in gaseous streams are assumed to exist as solid particulate.									

	A	B	C	D	E	F	G	H	I	J
1	**Table C-5 HFP03 Stream Report**									
3	**Stream Number:**		HFP03							
4	**Stream Name:**		Blended HLW melter feed to HLW melter							
5	**Configuration:**		MRQ-05-0049.acmf							
6	**Run Date / Time:**		12/14/2005 - 1:42:25 PM							
7	**Run Data File:**		H:\ACM v3.1\MRQ-05-0049\MRQ_05_0049A_Streams.csv							
8										
9	**Stream Properties**									
10	**Variable**	**Value**	**Units**							
11	Density	1.06E+00	g/cm^3	(does not include solid phase)						
12	Enthalpy	-5.24E+06	BTU/hr							
13	Mass Flow	1.51E+03	Lb/hr							
14		3.62E+04	Lb/day							
15	Volumetric Flow	1.54E+00	GPM	(does not include solid phase)						
16		2.05E-01	ft^3/min	(does not include solid phase)						
17	Molar Flow	4.29E+01	Lbmol/hr							
18	Molecular Weight	1.89E+01	Lb/Lbmol							
19	Pressure	1.00E+03	mbar							
20	Temperature	3.00E+01	C							
21	Na Molarity	9.21E-01	mol/L							
22	pH	6.99E+00	pH							
23	Total TRU	1.36E-01	Ci/L							
24	Total Activity	3.03E+01	Ci/L							
25										
26	**Component**	**Aqueous Comp**			**Solid Comp**	**Gaseous (1)**		**Total Comp**		
27	**Unit**	**mol/L**	**Lb/gal**	**Lb/day**	**Lb/day**	**mol/L**	**Lb/day**	**Lb/day**	**mt/day**	**g/sec**
28	**Total**	5.58E+01	8.81E+00	1.95E+04	1.52E+04	0.00E+00	0.00E+00	3.47E+04	1.58E+01	1.83E+02
29	Ag^+	5.81E-06	5.23E-06	1.16E-02	3.62E+00	0.00E+00	0.00E+00	3.63E+00	1.65E-03	1.91E-02
30	Al^{+3}	7.03E-02	1.58E-02	3.50E+01	6.01E+02	0.00E+00	0.00E+00	6.36E+02	2.89E-01	3.34E+00
31	As^{+3}	2.56E-05	1.60E-05	3.54E-02	2.33E-01	0.00E+00	0.00E+00	2.68E-01	1.22E-04	1.41E-03
32	B^{+3}	3.93E-02	3.55E-03	7.85E+00	3.31E+02	0.00E+00	0.00E+00	3.38E+02	1.54E-01	1.78E+00
33	Ba^{+2}	5.34E-06	6.12E-06	1.35E-02	3.23E+00	0.00E+00	0.00E+00	3.24E+00	1.47E-03	1.71E-02
34	Bi^{+3}	6.28E-06	1.09E-05	2.42E-02	1.69E+01	0.00E+00	0.00E+00	1.70E+01	7.71E-03	8.92E-02
35	Ca^{+2}	3.70E-04	1.24E-04	2.73E-01	1.97E+01	0.00E+00	0.00E+00	2.00E+01	9.09E-03	1.05E-01
36	Cd^{+2}	9.88E-06	9.27E-06	2.05E-02	1.31E+01	0.00E+00	0.00E+00	1.31E+01	5.94E-03	6.88E-02
37	Ce^{+3}	2.37E-04	2.77E-04	6.13E-01	4.02E+00	0.00E+00	0.00E+00	4.64E+00	2.11E-03	2.44E-02
38	Cl^-	1.22E-02	3.80E-03	7.95E+00	3.92E+00	0.00E+00	0.00E+00	1.19E+01	5.40E-03	6.25E-02
39	CO	6.36E-101	1.49E-101	3.29E-98	0.00E+00	0.00E+00	0.00E+00	3.29E-98	1.49E-101	1.73E-100
40	CO_2	4.90E-06	1.80E-06	3.98E-03	0.00E+00	0.00E+00	0.00E+00	3.98E-03	1.81E-06	2.09E-05
41	CO_3^{-2}	5.62E-02	2.82E-02	6.23E+01	1.09E+03	0.00E+00	0.00E+00	1.16E+03	5.26E-01	6.09E+00
42	Cr^{+3}	1.69E-03	7.35E-04	1.63E+00	1.01E+01	0.00E+00	0.00E+00	1.17E+01	5.32E-03	6.16E-02
43	Cu^{+2}	9.81E-06	5.20E-06	1.15E-02	1.37E+00	0.00E+00	0.00E+00	1.38E+00	6.28E-04	7.27E-03
44	F^-	5.51E-03	8.74E-04	1.93E+00	7.13E+01	0.00E+00	0.00E+00	7.32E+01	3.33E-02	3.85E-01
45	Fe^{+3}	3.11E-04	1.45E-04	3.20E-01	5.80E+02	0.00E+00	0.00E+00	5.80E+02	2.64E-01	3.05E+00
46	H_2O	5.35E+01	8.05E+00	1.78E+04	0.00E+00	0.00E+00	0.00E+00	1.78E+04	8.09E+00	9.36E+01
47	$H_2O(b)$	0.00E+00	0.00E+00	0.00E+00	1.38E+02	0.00E+00	0.00E+00	1.38E+02	6.27E-02	7.26E-01
48	H^+	1.01E-07	8.53E-10	1.89E-06	0.00E+00	0.00E+00	0.00E+00	1.89E-06	8.57E-10	9.92E-09
49	HCL	0.00E+00	0.00E+00	0.00E+00	0.00E+00	0.00E+00	0.00E+00	0.00E+00	0.00E+00	0.00E+00
50	HCO3-	7.10E-24	3.61E-24	7.99E-21	0.00E+00	0.00E+00	0.00E+00	7.99E-21	3.63E-24	4.21E-23
51	H2CO3	7.68E-23	3.96E-23	8.77E-20	0.00E+00	0.00E+00	0.00E+00	8.77E-20	3.99E-23	4.61E-22
52	HF	0.00E+00	0.00E+00	0.00E+00	0.00E+00	0.00E+00	0.00E+00	0.00E+00	0.00E+00	0.00E+00
53	Hg^{+2}	1.03E-05	1.72E-05	3.80E-02	7.45E+00	0.00E+00	0.00E+00	7.49E+00	3.41E-03	3.94E-02
54	HNO_3	0.00E+00	0.00E+00	0.00E+00	0.00E+00	0.00E+00	0.00E+00	0.00E+00	0.00E+00	0.00E+00
55	K^+	2.92E-02	9.53E-03	2.11E+01	1.11E+01	0.00E+00	0.00E+00	3.22E+01	1.46E-02	1.69E-01
56	La^{+3}	2.72E-06	3.16E-06	6.98E-03	6.06E+00	0.00E+00	0.00E+00	6.06E+00	2.76E-03	3.19E-02
57	Li^+	2.12E-04	1.23E-05	2.71E-02	1.40E+02	0.00E+00	0.00E+00	1.40E+02	6.38E-02	7.38E-01
58	Mg^{+2}	8.09E-05	1.64E-05	3.63E-02	4.88E+00	0.00E+00	0.00E+00	4.92E+00	2.24E-03	2.59E-02
59	Mn^{+3}	8.78E-05	4.03E-05	8.90E-02	4.74E+01	0.00E+00	0.00E+00	4.75E+01	2.16E-02	2.50E-01
60	MnO_4^-	0.00E+00	0.00E+00	0.00E+00	0.00E+00	0.00E+00	0.00E+00	0.00E+00	0.00E+00	0.00E+00
61	N_2	2.28E-03	5.33E-04	1.18E+00	0.00E+00	0.00E+00	0.00E+00	1.18E+00	5.36E-04	6.20E-03
62	Na^+	9.21E-01	1.77E-01	3.91E+02	8.68E+02	0.00E+00	0.00E+00	1.26E+03	5.72E-01	6.62E+00
63	NH3	3.72E-03	5.28E-04	1.17E+00	0.00E+00	0.00E+00	0.00E+00	1.17E+00	5.31E-04	6.14E-03
64	NH4+	3.69E-20	5.28E-04	1.23E-17	0.00E+00	0.00E+00	0.00E+00	1.23E-17	5.58E-21	6.46E-20
65	Ni^{+2}	1.41E-04	6.92E-05	1.53E-01	2.11E+01	0.00E+00	0.00E+00	2.12E+01	9.65E-03	1.12E-01
66	NO	4.00E-26	1.00E-26	2.22E-23	0.00E+00	0.00E+00	0.00E+00	2.22E-23	1.01E-26	1.17E-25
67	NO_2	5.65E-39	2.17E-39	4.80E-36	0.00E+00	0.00E+00	0.00E+00	4.80E-36	2.18E-39	2.52E-38
68	NO_2^-	1.53E-01	5.86E-02	1.30E+02	1.99E+02	0.00E+00	0.00E+00	3.28E+02	1.49E-01	1.73E+00

CALCULATION SHEET

BY: E. Berrios
DATE: 12/22/05

PROJECT: WTP
JOB NO.: 24590
CALC NO.: 24590-WTP-M4C-FRP-00003
SHEET REV: D
SHEET NO.: C-11

SUBJECT: Integrated Baseline Emissions Report Non-SSFM Represented Constituents Emissions Rate Estimation

	A	B	C	D	E	F	G	H	I	J
69	NO_3^-	8.33E-01	4.31E-01	9.54E+02	1.53E+02	0.00E+00	0.00E+00	1.11E+03	5.03E-01	5.82E+00
70	O_2	7.36E-04	1.96E-04	4.34E-01	0.00E+00	0.00E+00	0.00E+00	4.34E-01	1.97E-04	2.29E-03
71	O^-	0.00E+00	0.00E+00	0.00E+00	9.53E+02	0.00E+00	0.00E+00	9.53E+02	4.33E-01	5.01E+00
72	OH^-	9.86E-08	1.40E-08	3.10E-05	3.14E+03	0.00E+00	0.00E+00	3.14E+03	1.43E+00	1.65E+01
73	$OH(b)^-$	1.56E-01	2.21E-02	4.88E+01	1.98E-19	0.00E+00	0.00E+00	4.88E+01	2.22E-02	2.57E-01
74	Pb^{+2}	3.59E-05	6.20E-05	1.37E-01	2.77E+01	0.00E+00	0.00E+00	2.78E+01	1.27E-02	1.46E-01
75	Pd^{+2}	2.78E-06	2.46E-06	5.45E-03	1.14E+00	0.00E+00	0.00E+00	1.14E+00	5.19E-04	6.01E-03
76	PO_4^{-3}	2.87E-03	2.28E-03	5.04E+00	1.25E+02	0.00E+00	0.00E+00	1.30E+02	5.90E-02	6.83E-01
77	Resin	0.00E+00	0.00E+00	0.00E+00	0.00E+00	0.00E+00	0.00E+00	0.00E+00	0.00E+00	0.00E+00
78	Rh^{+3}	2.68E-06	2.30E-06	5.10E-03	3.68E-01	0.00E+00	0.00E+00	3.73E-01	1.69E-04	1.96E-03
79	Ru^{+3}	3.99E-06	3.36E-06	7.44E-03	3.37E+00	0.00E+00	0.00E+00	3.38E+00	1.54E-03	1.78E-02
80	S^{+6}	0.00E+00	0.00E+00	0.00E+00	8.52E-17	0.00E+00	0.00E+00	8.52E-17	3.87E-20	4.48E-19
81	SiO2	5.43E-04	2.72E-04	6.02E-01	6.30E+03	0.00E+00	0.00E+00	6.30E+03	2.86E+00	3.31E+01
82	SiO_4^{-4}	4.15E-16	3.19E-16	7.05E-13	2.08E-06	0.00E+00	0.00E+00	2.08E-06	9.45E-10	1.09E-08
83	SO_2	6.08E-42	3.25E-42	7.19E-39	0.00E+00	0.00E+00	0.00E+00	7.19E-39	3.27E-42	3.78E-41
84	SO_4^{-2}	6.86E-03	5.50E-03	1.22E+01	4.59E+01	0.00E+00	0.00E+00	5.80E+01	2.64E-02	3.05E-01
85	Sr^{+2}	1.45E-06	1.06E-06	2.34E-03	1.80E+00	0.00E+00	0.00E+00	1.81E+00	8.21E-04	9.51E-03
86	Sucrose	0.00E+00	0.00E+00	0.00E+00	3.59E-36	0.00E+00	0.00E+00	3.59E-36	1.63E-39	1.89E-38
87	Ti^{+4}	4.48E-06	1.79E-06	3.95E-03	3.05E+00	0.00E+00	0.00E+00	3.06E+00	1.39E-03	1.61E-02
88	Zn^{+2}	1.67E-05	9.13E-06	2.02E-02	1.53E+02	0.00E+00	0.00E+00	1.53E+02	6.97E-02	8.07E-01
89	Zr^{+4}	1.23E-05	9.40E-06	2.08E-02	1.46E+02	0.00E+00	0.00E+00	1.46E+02	6.63E-02	7.67E-01
90										
91	**Components**	**Aqueous Comp**			**Solid Comp**	**Gaseous**		**Total Comp**		
92	**Unit**	**mol/L**	**Lb/gal**	**Lb/day**	**Lb/day**	**mol/L**	**Lb/day**	**Lb/day**	**Mt/day**	**g/sec**
93	**Total**	3.62E-03	2.66E-03	5.87E+00	5.21E+02	0.00E+00	0.00E+00	5.27E+02	2.40E-01	2.77E+00
94	$C_2O_4^{-2}$	3.62E-03	2.66E-03	5.87E+00	5.21E+02	0.00E+00	0.00E+00	5.27E+02	2.40E-01	2.77E+00
95	Formate	2.57E-15	9.66E-16	2.14E-12	1.01E-07	0.00E+00	0.00E+00	1.01E-07	4.58E-11	5.30E-10
96	Acetate	1.99E-15	9.82E-16	2.17E-12	1.02E-07	0.00E+00	0.00E+00	1.02E-07	4.66E-11	5.39E-10
97	Glycolate	1.33E-14	8.31E-15	1.84E-11	5.03E-08	0.00E+00	0.00E+00	5.03E-08	2.29E-11	2.65E-10
98	IDA	6.21E-15	6.90E-15	1.53E-11	1.28E-07	0.00E+00	0.00E+00	1.29E-07	5.84E-11	6.76E-10
99	Citrate	5.68E-16	9.11E-16	2.01E-12	1.10E-07	0.00E+00	0.00E+00	1.10E-07	5.02E-11	5.81E-10
100	HEDTA	2.66E-15	6.18E-15	1.37E-11	9.04E-08	0.00E+00	0.00E+00	9.04E-08	4.11E-11	4.76E-10
101	EDTA	3.20E-16	7.80E-16	1.72E-12	9.72E-08	0.00E+00	0.00E+00	9.72E-08	4.42E-11	5.11E-10
102										
103	**Rad. Comp**	**Aqueous Rad. Comp**			**Solids Rad. Comp (1)**			**Total Rad. Comp (1)**		
104	**Unit**	**Ci/L**	**Ci/day**	**Lb/day**	**Ci/L**	**Ci/day**	**Lb/day**	**Ci/L**	**Ci/day**	**Lb/day**
105	**Total**	1.60E+01	1.34E+05	5.13E+00	1.43E+01	1.19E+05	8.72E+02	3.03E+01	2.53E+05	6.77E+02
106	^{241}Am	5.44E-05	4.56E-01	2.93E-04	1.03E-01	8.61E+02	5.54E-01	1.03E-01	8.61E+02	5.54E-01
107	^{243}Am	3.56E-08	2.98E-04	3.29E-06	8.31E-06	6.96E-02	7.69E-04	8.35E-06	6.99E-02	7.72E-04
108	^{14}C	1.12E-06	9.35E-03	4.62E-06	7.26E-06	6.08E-02	3.00E-05	8.38E-06	7.01E-02	3.46E-05
109	^{60}Co	7.33E-06	6.14E-02	1.20E-07	1.14E-02	9.51E+01	1.85E-04	1.14E-02	9.52E+01	1.85E-04
110	^{243}Cm	5.90E-09	4.94E-05	2.15E-09	1.44E-04	1.20E+00	5.25E-05	1.44E-04	1.20E+00	5.25E-05
111	^{244}Cm	1.40E-07	1.17E-03	3.18E-08	3.27E-03	2.74E+01	7.45E-04	3.27E-03	2.74E+01	7.45E-04
112	^{137}Cs	1.60E+01	1.34E+05	3.40E+00	2.29E+00	1.92E+04	4.87E-01	1.83E+01	1.53E+05	3.89E+00
113	^{152}Eu	4.09E-07	3.43E-03	4.35E-08	5.47E-04	4.58E+00	5.81E-05	5.47E-04	4.58E+00	5.81E-05
114	^{154}Eu	8.49E-05	7.10E-01	5.80E-06	5.92E-02	4.96E+02	4.05E-03	5.93E-02	4.97E+02	4.05E-03
115	^{155}Eu	2.45E-05	2.05E-01	9.33E-07	8.77E-03	7.34E+01	3.33E-04	8.80E-03	7.37E+01	3.34E-04
116	^{3}H	2.40E-05	2.01E-01	4.60E-08	1.80E-04	1.51E+00	3.45E-07	2.04E-04	1.71E+00	3.91E-07
117	^{129}I	3.42E-08	2.87E-04	3.58E-03	3.58E-07	3.00E-03	3.74E-02	3.93E-07	3.29E-03	4.10E-02
118	^{63}Ni	1.31E-04	1.10E+00	4.27E-05	1.97E-03	1.65E+01	6.39E-04	2.10E-03	1.76E+01	6.82E-04
119	^{237}Np	4.33E-08	3.62E-04	1.13E-03	8.41E-05	7.04E-01	2.20E+00	8.42E-05	7.05E-01	2.20E+00
120	^{238}Pu	2.44E-07	2.04E-03	2.62E-07	3.99E-04	3.34E+00	4.30E-04	4.00E-04	3.35E+00	4.31E-04
121	^{239}Pu	3.37E-06	2.82E-02	1.00E-03	3.54E-03	2.96E+01	1.05E+00	3.54E-03	2.96E+01	1.05E+00
122	^{240}Pu	8.73E-07	7.31E-03	7.10E-05	9.33E-04	7.81E+00	7.59E-02	9.34E-04	7.82E+00	7.60E-02
123	^{241}Pu	1.83E-05	1.53E-01	3.28E-06	2.51E-02	2.10E+02	4.49E-03	2.51E-02	2.10E+02	4.49E-03
124	^{242}Pu	9.24E-11	7.74E-07	4.33E-07	8.60E-08	7.20E-04	4.03E-04	8.61E-08	7.21E-04	4.03E-04
125	^{125}Sb	5.07E-05	4.24E-01	9.02E-07	3.63E-02	3.04E+02	6.46E-04	3.64E-02	3.05E+02	6.47E-04
126	^{151}Sm	7.11E-04	5.95E+00	4.99E-04	4.40E-01	3.68E+03	3.09E-01	4.41E-01	3.69E+03	3.09E-01
127	^{126}Sn	8.06E-07	6.75E-03	1.31E-03	1.70E-04	1.43E+00	2.77E-01	1.71E-04	1.43E+00	2.78E-01
128	^{90}Sr	1.76E-02	1.47E+02	2.35E-03	1.13E+01	9.42E+04	1.50E+00	1.13E+01	9.44E+04	1.51E+00
129	^{99}Tc	1.41E-04	1.18E+00	1.53E-01	2.54E-02	2.12E+02	2.78E+01	2.55E-02	2.14E+02	2.78E+01
130	^{232}Th	1.31E-09	1.10E-05	2.20E-01	2.78E-06	2.33E-02	4.67E+02	2.79E-06	2.33E-02	4.67E+02
131	^{233}U	4.38E-08	3.67E-04	6.39E-05	2.28E-04	1.91E+00	4.37E-01	2.28E-04	1.91E+00	4.37E-01
132	^{234}U	3.11E-08	2.60E-04	9.24E-05	1.18E-05	9.92E-02	3.52E-02	1.19E-05	9.95E-02	3.53E-02
133	^{235}U	1.23E-09	1.03E-05	1.05E-02	2.85E-07	2.38E-03	2.43E+00	2.86E-07	2.39E-03	2.44E+00
134	^{238}U	2.10E-09	1.76E-05	5.99E-04	3.91E-07	3.28E-03	1.12E-01	3.93E-07	3.29E-03	1.12E-01
135	^{234}U	2.43E-08	2.03E-04	1.33E+00	6.70E-06	5.61E-02	3.68E+02	6.73E-06	5.63E-02	3.70E+02
136	(1) All radionuclides in gaseous streams are assumed to exist as solid particulate.									

	A	B	C	D	E	F	G	H	I	J
1	**Table C-6 HLP09 Stream Report**									
3	**Stream Number:**		HLP09							
4	**Stream Name:**		Blended HLW feed to HLW Vitrification							
5	**Configuration:**		MRQ-05-0049.acmf							
6	**Run Date / Time:**		12/14/2005 - 1:42:25 PM							
7	**Run Date File:**		H:\ACM v3.1\MRQ-05-0049\MRQ_05_0049A_Streams.csv							
8										
9	**Stream Properties**									
10	**Variable**	**Value**	**Units**							
11	Density	1.06E+00	g/cm^3	(does not include solid phase)						
12	Enthalpy	-4.75E+06	BTU/hr							
13	Mass Flow	1.02E+03	Lb/hr							
14		2.44E+04	Lb/day							
15	Volumetric Flow	1.40E+00	GPM	(does not include solid phase)						
16		1.88E-01	ft^3/min	(does not include solid phase)						
17	Molar Flow	3.91E+01	Lbmol/hr							
18	Molecular Weight	1.90E+01	Lb/Lbmol							
19	Pressure	1.00E+03	mbar							
20	Temperature	4.50E+01	C							
21	Na Molarity	1.01E+00	mol/L							
22	pH	1.26E+01	pH							
23	Total TRU	1.49E-01	Ci/L							
24	Total Activity	3.31E+01	Ci/L							
25										
26	**Component**	**Aqueous Comp**			**Solid Comp**	**Gaseous (1)**		**Total Comp**		
27	**Unit**	**mol/L**	**Lb/gal**	**Lb/day**	**Lb/day**	**mol/L**	**Lb/day**	**Lb/day**	**mt/day**	**g/sec**
28	Total	5.56E+01	8.82E+00	1.78E+04	5.15E+03	0.00E+00	0.00E+00	2.30E+04	1.05E+01	1.21E+02
29	Ag^{+}	6.35E-06	5.72E-06	1.16E-02	3.62E+00	0.00E+00	0.00E+00	3.63E+00	1.65E-03	1.91E-02
30	Al^{+3}	7.68E-02	1.73E-02	3.50E+01	4.99E+02	0.00E+00	0.00E+00	5.34E+02	2.43E-01	2.81E+00
31	As^{+3}	2.80E-05	1.75E-05	3.54E-02	2.33E-01	0.00E+00	0.00E+00	2.68E-01	1.22E-04	1.41E-03
32	B^{+3}	4.65E-04	4.19E-05	8.48E-02	1.43E+01	0.00E+00	0.00E+00	1.44E+01	6.53E-03	7.56E-02
33	Ba^{+2}	5.84E-06	6.69E-06	1.35E-02	3.23E+00	0.00E+00	0.00E+00	3.24E+00	1.47E-03	1.71E-02
34	Bi^{+3}	6.86E-06	1.20E-05	2.42E-02	1.69E+01	0.00E+00	0.00E+00	1.70E+01	7.71E-03	8.92E-02
35	Ca^{+2}	4.04E-04	1.35E-04	2.73E-01	1.93E+01	0.00E+00	0.00E+00	1.95E+01	8.88E-03	1.03E-01
36	Cd^{+2}	1.08E-05	1.01E-05	2.05E-02	1.30E+01	0.00E+00	0.00E+00	1.31E+01	5.94E-03	6.87E-02
37	Ce^{+3}	2.59E-04	3.03E-04	6.13E-01	4.02E+00	0.00E+00	0.00E+00	4.64E+00	2.11E-03	2.44E-02
38	Cl^{-}	1.27E-02	3.77E-03	7.62E+00	3.92E+00	0.00E+00	0.00E+00	1.15E+01	5.25E-03	6.07E-02
39	CO	6.95E-101	1.62E-101	3.29E-98	0.00E+00	0.00E+00	0.00E+00	3.29E-98	1.49E-101	1.73E-100
40	CO_2	5.36E-06	1.97E-06	3.98E-03	0.00E+00	0.00E+00	0.00E+00	3.98E-03	1.81E-06	2.09E-05
41	CO_3^{-2}	6.15E-02	3.08E-02	6.23E+01	4.40E+02	0.00E+00	0.00E+00	5.02E+02	2.28E-01	2.64E+00
42	Cr^{+3}	1.85E-03	8.04E-04	1.63E+00	1.01E+01	0.00E+00	0.00E+00	1.17E+01	5.32E-03	6.16E-02
43	Cu^{+2}	1.07E-05	5.69E-06	1.15E-02	1.37E+00	0.00E+00	0.00E+00	1.38E+00	6.28E-04	7.27E-03
44	F^{-}	6.03E-03	9.56E-04	1.93E+00	7.13E+01	0.00E+00	0.00E+00	7.32E+01	3.33E-02	3.85E-01
45	Fe^{+3}	3.40E-04	1.58E-04	3.20E-01	5.13E+02	0.00E+00	0.00E+00	5.13E+02	2.33E-01	2.70E+00
46	H_2O	5.33E+01	8.01E+00	1.62E+04	0.00E+00	0.00E+00	0.00E+00	1.62E+04	7.37E+00	8.53E+01
47	$H_2O(b)$	0.00E+00	0.00E+00	0.00E+00	0.00E+00	0.00E+00	0.00E+00	0.00E+00	0.00E+00	0.00E+00
48	H^{+}	2.35E-13	1.98E-15	4.00E-12	0.00E+00	0.00E+00	0.00E+00	4.00E-12	1.82E-15	2.11E-14
49	HCL	0.00E+00	0.00E+00	0.00E+00	0.00E+00	0.00E+00	0.00E+00	0.00E+00	0.00E+00	0.00E+00
50	HCO3-	7.76E-24	3.95E-24	7.99E-21	0.00E+00	0.00E+00	0.00E+00	7.99E-21	3.63E-24	4.21E-23
51	H2CO3	8.37E-23	4.33E-23	8.77E-20	0.00E+00	0.00E+00	0.00E+00	8.77E-20	3.99E-23	4.61E-22
52	HF	0.00E+00	0.00E+00	0.00E+00	0.00E+00	0.00E+00	0.00E+00	0.00E+00	0.00E+00	0.00E+00
53	Hg^{+2}	1.12E-05	1.88E-05	3.80E-02	7.45E+00	0.00E+00	0.00E+00	7.49E+00	3.41E-03	3.94E-02
54	HNO_3	0.00E+00	0.00E+00	0.00E+00	0.00E+00	0.00E+00	0.00E+00	0.00E+00	0.00E+00	0.00E+00
55	K^{+}	3.19E-02	1.04E-02	2.11E+01	1.01E+01	0.00E+00	0.00E+00	3.11E+01	1.42E-02	1.64E-01
56	La^{+3}	2.98E-06	3.45E-06	6.98E-03	6.06E+00	0.00E+00	0.00E+00	6.06E+00	2.76E-03	3.19E-02
57	Li^{+}	2.31E-04	1.34E-05	2.71E-02	1.12E+00	0.00E+00	0.00E+00	1.15E+00	5.23E-04	6.05E-03
58	Mg^{+2}	8.85E-05	1.79E-05	3.63E-02	4.01E+00	0.00E+00	0.00E+00	4.04E+00	1.84E-03	2.13E-02
59	Mn^{+3}	9.60E-05	4.40E-05	8.90E-02	4.73E+01	0.00E+00	0.00E+00	4.74E+01	2.15E-02	2.49E-01
60	MnO_4^{-}	0.00E+00	0.00E+00	0.00E+00	0.00E+00	0.00E+00	0.00E+00	0.00E+00	0.00E+00	0.00E+00
61	N_2	2.49E-03	5.83E-04	1.18E+00	0.00E+00	0.00E+00	0.00E+00	1.18E+00	5.36E-04	6.20E-03
62	Na^{+}	1.01E+00	1.93E-01	3.91E+02	7.92E+02	0.00E+00	0.00E+00	1.18E+03	5.38E-01	6.22E+00
63	NH3	4.06E-03	5.77E-04	1.17E+00	0.00E+00	0.00E+00	0.00E+00	1.17E+00	5.31E-04	6.14E-03
64	NH4+	4.03E-20	5.77E-04	1.23E-17	0.00E+00	0.00E+00	0.00E+00	1.23E-17	5.58E-21	6.46E-20
65	Ni^{+2}	1.54E-04	7.56E-05	1.53E-01	2.11E+01	0.00E+00	0.00E+00	2.12E+01	9.65E-03	1.12E-01
66	NO	4.38E-26	1.10E-26	2.22E-23	0.00E+00	0.00E+00	0.00E+00	2.22E-23	1.01E-26	1.17E-25
67	NO_2	6.18E-39	2.37E-39	4.80E-36	0.00E+00	0.00E+00	0.00E+00	4.80E-36	2.18E-39	2.52E-38
68	NO_2^{-}	1.67E-01	6.40E-02	1.30E+02	1.99E+02	0.00E+00	0.00E+00	3.28E+02	1.49E-01	1.73E+00

CALCULATION SHEET

BY: E. Berrios
DATE: 12/22/05

PROJECT: WTP
JOB NO.: 24590
CALC NO.: 24590-WTP-M4C-FRP-00003
SHEET REV: D
SHEET NO.: C-13

SUBJECT: Integrated Baseline Emissions Report Non-SSFM Represented Constituents Emissions Rate Estimation

	A	B	C	D	E	F	G	H	I	J
69	NO_3^-	9.11E-01	4.71E-01	9.54E+02	1.53E+02	0.00E+00	0.00E+00	1.11E+03	5.03E-01	5.82E+00
70	O_2	8.04E-04	2.15E-04	4.34E-01	0.00E+00	0.00E+00	0.00E+00	4.34E-01	1.97E-04	2.29E-03
71	O^-	0.00E+00	0.00E+00	0.00E+00	4.41E+01	0.00E+00	0.00E+00	4.41E+01	2.00E-02	2.32E-01
72	OH^-	4.25E-02	6.04E-03	1.22E+01	1.81E+03	0.00E+00	0.00E+00	1.83E+03	8.30E-01	9.61E+00
73	$OH(b)^-$	8.37E-10	1.19E-10	2.40E-07	1.98E-19	0.00E+00	0.00E+00	2.40E-07	1.09E-10	1.26E-09
74	Pb^{+2}	3.92E-05	6.78E-05	1.37E-01	2.77E+01	0.00E+00	0.00E+00	2.78E+01	1.26E-02	1.46E-01
75	Pd^{+2}	3.03E-06	2.69E-06	5.45E-03	1.14E+00	0.00E+00	0.00E+00	1.14E+00	5.19E-04	6.01E-03
76	PO_4^{-3}	3.14E-03	2.49E-03	5.04E+00	1.24E+02	0.00E+00	0.00E+00	1.29E+02	5.88E-02	6.81E-01
77	Resin	0.00E+00	0.00E+00	0.00E+00	0.00E+00	0.00E+00	0.00E+00	0.00E+00	0.00E+00	0.00E+00
78	Rh^{+3}	2.93E-06	2.52E-06	5.10E-03	3.68E-01	0.00E+00	0.00E+00	3.73E-01	1.69E-04	1.96E-03
79	Ru^{+3}	4.36E-06	3.88E-06	7.44E-03	3.37E+00	0.00E+00	0.00E+00	3.38E+00	1.54E-03	1.78E-02
80	S^{+6}	0.00E+00	0.00E+00	0.00E+00	8.52E-17	0.00E+00	0.00E+00	8.52E-17	3.87E-20	4.48E-19
81	SiO2	5.93E-04	2.98E-04	6.02E-01	1.09E+02	0.00E+00	0.00E+00	1.10E+02	5.00E-02	5.78E-01
82	SiO_4^{-4}	4.54E-16	3.49E-16	7.05E-13	2.08E-06	0.00E+00	0.00E+00	2.08E-06	9.45E-10	1.09E-08
83	SO_2	6.65E-42	3.56E-42	7.19E-39	0.00E+00	0.00E+00	0.00E+00	7.19E-39	3.27E-42	3.78E-41
84	SO_4^{-2}	7.49E-03	6.01E-03	1.22E+01	4.50E+01	0.00E+00	0.00E+00	5.71E+01	2.60E-02	3.01E-01
85	Sr^{+2}	1.58E-06	1.16E-06	2.34E-03	1.80E+00	0.00E+00	0.00E+00	1.81E+00	8.21E-04	9.51E-03
86	Sucrose	0.00E+00	0.00E+00	0.00E+00	3.59E-36	0.00E+00	0.00E+00	3.59E-36	1.63E-39	1.89E-38
87	Ti^{+4}	4.89E-06	1.95E-06	3.95E-03	7.24E-01	0.00E+00	0.00E+00	7.28E-01	3.31E-04	3.83E-03
88	Zn^{+2}	1.83E-05	9.99E-06	2.02E-02	3.35E+00	0.00E+00	0.00E+00	3.37E+00	1.53E-03	1.77E-02
89	Zr^{+4}	1.35E-05	1.03E-05	2.08E-02	1.25E+02	0.00E+00	0.00E+00	1.25E+02	5.67E-02	6.56E-01
90										
91	**Components**	**Aqueous Comp**			**Solid Comp**	**Gaseous**		**Total Comp**		
92	**Unit**	**mol/L**	**Lb/gal**	**Lb/day**	**Lb/day**	**mol/L**	**Lb/day**	**Lb/day**	**Mt/day**	**g/sec**
93	**Total**	3.95E-03	2.90E-03	5.87E+00	5.21E+02	0.00E+00	0.00E+00	5.27E+02	2.40E-01	2.77E+00
94	$C_2O_4^{-2}$	3.95E-03	2.90E-03	5.87E+00	5.21E+02	0.00E+00	0.00E+00	5.27E+02	2.40E-01	2.77E+00
95	Formate	2.81E-15	1.06E-15	2.14E-12	1.01E-07	0.00E+00	0.00E+00	1.01E-07	4.58E-11	5.30E-10
96	Acetate	2.18E-15	1.07E-15	2.17E-12	1.02E-07	0.00E+00	0.00E+00	1.02E-07	4.66E-11	5.39E-10
97	Glycolate	1.45E-14	9.08E-15	1.84E-11	5.03E-08	0.00E+00	0.00E+00	5.03E-08	2.29E-11	2.65E-10
98	IDA	6.79E-15	7.55E-15	1.53E-11	1.28E-07	0.00E+00	0.00E+00	1.29E-07	5.84E-11	6.76E-10
99	Citrate	6.21E-16	9.96E-16	2.01E-12	1.10E-07	0.00E+00	0.00E+00	1.10E-07	5.02E-11	5.81E-10
100	HEDTA	2.91E-15	6.75E-15	1.37E-11	9.04E-08	0.00E+00	0.00E+00	9.04E-08	4.11E-11	4.76E-10
101	EDTA	3.49E-16	8.52E-16	1.72E-12	9.72E-08	0.00E+00	0.00E+00	9.72E-08	4.42E-11	5.11E-10
102										
103	**Rad. Comp**	**Aqueous Rad. Comp**			**Solids Rad. Comp (1)**			**Total Rad. Comp (1)**		
104	**Unit**	**Ci/L**	**Ci/day**	**Lb/day**	**Ci/L**	**Ci/day**	**Lb/day**	**Ci/L**	**Ci/day**	**Lb/day**
105	**Total**	1.75E+01	1.34E+05	5.13E+00	1.56E+01	1.19E+05	8.72E+02	3.31E+01	2.53E+05	8.77E+02
106	^{241}Am	5.95E-05	4.56E-01	2.93E-04	1.12E-01	8.61E+02	5.54E-01	1.12E-01	8.61E+02	5.54E-01
107	^{243}Am	3.89E-08	2.98E-04	3.29E-06	9.08E-06	6.96E-02	7.69E-04	9.12E-06	6.99E-02	7.72E-04
108	^{14}C	1.22E-06	9.35E-03	4.62E-06	7.94E-06	6.08E-02	3.00E-05	9.16E-06	7.01E-02	3.46E-05
109	^{60}Co	8.01E-06	6.14E-02	1.20E-07	1.24E-02	9.51E+01	1.85E-04	1.24E-02	9.52E+01	1.85E-04
110	^{243}Cm	6.44E-09	4.94E-05	2.15E-09	1.57E-04	1.20E+00	5.25E-05	1.57E-04	1.20E+00	5.25E-05
111	^{244}Cm	1.53E-07	1.17E-03	3.18E-08	3.57E-03	2.74E+01	7.45E-04	3.57E-03	2.74E+01	7.45E-04
112	^{137}Cs	1.75E+01	1.34E+05	3.40E+00	2.50E+00	1.92E+04	4.87E-01	2.00E+01	1.53E+05	3.89E+00
113	^{152}Eu	4.48E-07	3.43E-03	4.35E-08	5.98E-04	4.58E+00	5.81E-05	5.98E-04	4.58E+00	5.81E-05
114	^{154}Eu	9.28E-05	7.10E-01	5.80E-06	6.48E-02	4.96E+02	4.05E-03	6.48E-02	4.97E+02	4.05E-03
115	^{155}Eu	2.68E-05	2.05E-01	9.33E-07	9.59E-03	7.34E+01	3.33E-04	9.62E-03	7.37E+01	3.34E-04
116	^{3}H	2.62E-05	2.01E-01	4.60E-08	1.97E-04	1.51E+00	3.45E-07	2.23E-04	1.71E+00	3.91E-07
117	^{129}I	3.74E-08	2.87E-04	3.58E-03	3.92E-07	3.00E-03	3.74E-02	4.29E-07	3.29E-03	4.10E-02
118	^{63}Ni	1.44E-04	1.10E+00	4.27E-05	2.15E-03	1.65E+01	6.39E-04	2.30E-03	1.76E+01	6.82E-04
119	^{237}Np	4.73E-08	3.62E-04	1.13E-03	9.20E-05	7.04E-01	2.20E+00	9.20E-05	7.05E-01	2.20E+00
120	^{238}Pu	2.66E-07	2.04E-03	2.62E-07	4.37E-04	3.34E+00	4.30E-04	4.37E-04	3.35E+00	4.31E-04
121	^{239}Pu	3.68E-06	2.82E-02	1.00E-03	3.87E-03	2.96E+01	1.05E+00	3.87E-03	2.96E+01	1.05E+00
122	^{240}Pu	9.54E-07	7.31E-03	7.10E-05	1.02E-03	7.81E+00	7.59E-02	1.02E-03	7.82E+00	7.60E-02
123	^{241}Pu	2.00E-05	1.53E-01	3.28E-06	2.74E-02	2.10E+02	4.49E-03	2.74E-02	2.10E+02	4.49E-03
124	^{242}Pu	1.01E-10	7.74E-07	4.33E-07	9.40E-08	7.20E-04	4.03E-04	9.41E-08	7.21E-04	4.03E-04
125	^{125}Sb	5.54E-05	4.24E-01	9.02E-07	3.97E-02	3.04E+02	6.46E-04	3.98E-02	3.05E+02	6.47E-04
126	^{151}Sm	7.77E-04	5.95E+00	4.99E-04	4.81E-01	3.68E+03	3.09E-01	4.82E-01	3.69E+03	3.09E-01
127	^{126}Sn	8.81E-07	6.75E-03	1.31E-03	1.86E-04	1.43E+00	2.77E-01	1.87E-04	1.43E+00	2.78E-01
128	^{90}Sr	1.92E-02	1.47E+02	2.35E-03	1.23E+01	9.42E+04	1.50E+00	1.23E+01	9.44E+04	1.51E+00
129	^{99}Tc	1.54E-04	1.18E+00	1.53E-01	2.77E-02	2.12E+02	2.76E+01	2.79E-02	2.14E+02	2.78E+01
130	^{232}Th	1.44E-09	1.10E-05	2.20E-01	3.04E-06	2.33E-02	4.67E+02	3.04E-06	2.33E-02	4.67E+02
131	^{233}U	4.79E-08	3.67E-04	8.39E-05	2.49E-04	1.91E+00	4.37E-01	2.49E-04	1.91E+00	4.37E-01
132	^{234}U	3.40E-08	2.60E-04	9.24E-05	1.30E-05	9.92E-02	3.52E-02	1.30E-05	9.95E-02	3.53E-02
133	^{235}U	1.34E-09	1.03E-05	1.05E-02	3.11E-07	2.38E-03	2.43E+00	3.13E-07	2.39E-03	2.44E+00
134	^{236}U	2.29E-09	1.76E-05	5.99E-04	4.28E-07	3.28E-03	1.12E-01	4.30E-07	3.29E-03	1.12E-01
135	^{238}U	2.65E-08	2.03E-04	1.33E+00	7.33E-06	5.61E-02	3.68E+02	7.35E-06	5.63E-02	3.70E+02
136	(1) All radionuclides in gaseous streams are assumed to exist as solid particulate.									

	A	B	C	D	E	F	G	H	I	J
1	**Table C-7 HMP06 Stream Report**									
3	**Stream Number:**		HMP06							
4	**Stream Name:**		Melter offgas (primary)							
5	**Configuration:**		MRQ-05-0049.acmf							
6	**Run Date / Time:**		12/14/2005 - 1:42:25 PM							
7	**Run Date File:**		H:\ACM v3.1\MRQ-05-0049\MRQ_05_0049A_Streams.csv							
8										
10	**Variable**	**Value**	**Units**							
11	Density	4.13E-04	g/cm^3	(does not include solid phase)						
12	Enthalpy	-4.44E+06	BTU/hr							
13	Mass Flow	2.21E+03	Lb/hr							
14		5.31E+04	Lb/day							
15	Volumetric Flow	1.06E+04	GPM	(does not include solid phase)						
16		1.42E+03	ft^3/min	(does not include solid phase)						
17	Molar Flow	9.24E+01	Lbmol/hr							
18	Molecular Weight	2.36E+01	Lb/Lbmol							
19	Pressure	9.76E+02	mbar							
20	Temperature	4.00E+02	C							
21	Na Molarity	0.00E+00	mol/L							
22	pH	0.00E+00	pH							
23	Total TRU	3.25E-07	Ci/L							
24	Total Activity	1.07E-04	Ci/L							
25										
26	**Component**	**Aqueous Comp**			**Solid Comp**	**Gaseous (1)**		**Total Comp**		
27	**Unit**	**mol/L**	**Lb/gal**	**Lb/day**	**Lb/day**	**mol/L**	**Lb/day**	**Lb/day**	**mt/day**	**g/sec**
28	Total	0.00E+00	0.00E+00	0.00E+00	1.33E+02	1.74E-02	5.25E+04	5.26E+04	2.39E+01	2.77E+02
29	Ag^{+}	0.00E+00	0.00E+00	0.00E+00	1.21E-01	0.00E+00	0.00E+00	1.21E-01	5.50E-05	6.37E-04
30	Al^{+3}	0.00E+00	0.00E+00	0.00E+00	6.36E+00	0.00E+00	0.00E+00	6.36E+00	2.89E-03	3.34E-02
31	As^{+3}	0.00E+00	0.00E+00	0.00E+00	1.28E-02	0.00E+00	0.00E+00	1.28E-02	5.80E-06	6.72E-05
32	B^{+3}	0.00E+00	0.00E+00	0.00E+00	1.13E+01	0.00E+00	0.00E+00	1.13E+01	5.13E-03	5.93E-02
33	Ba^{+2}	0.00E+00	0.00E+00	0.00E+00	3.24E-02	0.00E+00	0.00E+00	3.24E-02	1.47E-05	1.71E-04
34	Bi^{+3}	0.00E+00	0.00E+00	0.00E+00	2.92E-01	0.00E+00	0.00E+00	2.92E-01	1.33E-04	1.54E-03
35	Ca^{+2}	0.00E+00	0.00E+00	0.00E+00	2.67E-01	0.00E+00	0.00E+00	2.67E-01	1.21E-04	1.40E-03
36	Cd^{+2}	0.00E+00	0.00E+00	0.00E+00	1.31E+00	0.00E+00	0.00E+00	1.31E+00	5.94E-04	6.88E-03
37	Ce^{+3}	0.00E+00	0.00E+00	0.00E+00	2.32E-02	0.00E+00	0.00E+00	2.32E-02	1.05E-05	1.22E-04
38	Cl^{-}	0.00E+00	0.00E+00	0.00E+00	0.00E+00	0.00E+00	0.00E+00	0.00E+00	0.00E+00	0.00E+00
39	CO	0.00E+00	0.00E+00	0.00E+00	0.00E+00	1.59E-06	5.65E+00	5.65E+00	2.57E-03	2.97E-02
40	CO_2	0.00E+00	0.00E+00	0.00E+00	0.00E+00	1.59E-04	8.88E+02	8.88E+02	4.03E-01	4.67E+00
41	CO_3^{-2}	0.00E+00	0.00E+00	0.00E+00	0.00E+00	0.00E+00	0.00E+00	0.00E+00	0.00E+00	0.00E+00
42	Cr^{+3}	0.00E+00	0.00E+00	0.00E+00	1.17E-01	0.00E+00	0.00E+00	1.17E-01	5.32E-05	6.16E-04
43	Cu^{+2}	0.00E+00	0.00E+00	0.00E+00	8.13E-03	0.00E+00	0.00E+00	8.13E-03	3.69E-06	4.27E-05
44	F^{-}	0.00E+00	0.00E+00	0.00E+00	0.00E+00	0.00E+00	0.00E+00	0.00E+00	0.00E+00	0.00E+00
45	Fe^{+3}	0.00E+00	0.00E+00	0.00E+00	4.83E+00	0.00E+00	0.00E+00	4.83E+00	2.20E-03	2.54E-02
46	H_2O	0.00E+00	0.00E+00	0.00E+00	0.00E+00	8.70E-03	1.99E+04	1.99E+04	9.07E+00	1.05E+02
47	$H_2O(b)$	0.00E+00	0.00E+00	0.00E+00	0.00E+00	0.00E+00	0.00E+00	0.00E+00	0.00E+00	0.00E+00
48	H^{+}	0.00E+00	0.00E+00	0.00E+00	0.00E+00	0.00E+00	0.00E+00	0.00E+00	0.00E+00	0.00E+00
49	HCL	0.00E+00	0.00E+00	0.00E+00	0.00E+00	1.39E-06	6.43E+00	6.43E+00	2.92E-03	3.38E-02
50	HCO3-	0.00E+00	0.00E+00	0.00E+00	7.99E-21	0.00E+00	0.00E+00	7.99E-21	3.63E-24	4.21E-23
51	H2CO3	0.00E+00	0.00E+00	0.00E+00	0.00E+00	0.00E+00	0.00E+00	0.00E+00	0.00E+00	0.00E+00
52	HF	0.00E+00	0.00E+00	0.00E+00	0.00E+00	7.57E-06	1.93E+01	1.93E+01	8.76E-03	1.01E-01
53	Hg^{+2}	0.00E+00	0.00E+00	0.00E+00	7.49E+00	0.00E+00	0.00E+00	7.49E+00	3.41E-03	3.94E-02
54	HNO_3	0.00E+00	0.00E+00	0.00E+00	0.00E+00	0.00E+00	0.00E+00	0.00E+00	0.00E+00	0.00E+00
55	K^{+}	0.00E+00	0.00E+00	0.00E+00	1.61E+00	0.00E+00	0.00E+00	1.61E+00	7.31E-04	8.47E-03
56	La^{+3}	0.00E+00	0.00E+00	0.00E+00	1.21E-01	0.00E+00	0.00E+00	1.21E-01	5.51E-05	6.38E-04
57	Li^{+}	0.00E+00	0.00E+00	0.00E+00	1.40E+00	0.00E+00	0.00E+00	1.40E+00	6.38E-04	7.38E-03
58	Mg^{+2}	0.00E+00	0.00E+00	0.00E+00	7.81E-02	0.00E+00	0.00E+00	7.81E-02	3.55E-05	4.11E-04
59	Mn^{+3}	0.00E+00	0.00E+00	0.00E+00	6.33E-01	0.00E+00	0.00E+00	6.33E-01	2.88E-04	3.33E-03
60	MnO_4^{-}	0.00E+00	0.00E+00	0.00E+00	0.00E+00	0.00E+00	0.00E+00	0.00E+00	0.00E+00	0.00E+00
61	N_2	0.00E+00	0.00E+00	0.00E+00	0.00E+00	6.45E-03	2.30E+04	2.30E+04	1.05E+01	1.21E+02
62	Na^{+}	0.00E+00	0.00E+00	0.00E+00	1.26E+01	0.00E+00	0.00E+00	1.26E+01	5.72E-03	6.62E-02
63	NH3	0.00E+00	0.00E+00	0.00E+00	0.00E+00	1.16E-06	2.51E+00	2.51E+00	1.14E-03	1.32E-02
64	NH4+	0.00E+00	0.00E+00	0.00E+00	1.23E-17	0.00E+00	0.00E+00	1.23E-17	5.58E-21	6.46E-20
65	Ni^{+2}	0.00E+00	0.00E+00	0.00E+00	2.39E-01	0.00E+00	0.00E+00	2.39E-01	1.08E-04	1.26E-03
66	NO	0.00E+00	0.00E+00	0.00E+00	0.00E+00	1.04E-04	3.96E+02	3.96E+02	1.80E-01	2.08E+00
67	NO_2	0.00E+00	0.00E+00	0.00E+00	0.00E+00	9.70E-06	5.66E+01	5.66E+01	2.58E-02	2.99E-01
68	NO_2^{-}	0.00E+00	0.00E+00	0.00E+00	0.00E+00	0.00E+00	0.00E+00	0.00E+00	0.00E+00	0.00E+00

CALCULATION SHEET

BY: E. Bernos
DATE: 12/22/05

PROJECT: WTP
JOB NO.: 24590
CALC NO.: 24590-WTP-M4C-FRP-00003
SHEET REV: D
SHEET NO.: C-15

SUBJECT: Integrated Baseline Emissions Report Non-SSFM Represented Constituents Emissions Rate Estimation

	A	B	C	D	E	F	G	H	I	J
69	NO_3^-	0.00E+00	0.00E+00	0.00E+00	0.00E+00	0.00E+00	0.00E+00	0.00E+00	0.00E+00	0.00E+00
70	O_2	0.00E+00	0.00E+00	0.00E+00	0.00E+00	2.00E-03	8.14E+03	8.14E+03	3.70E+00	4.28E+01
71	O^-	0.00E+00	0.00E+00	0.00E+00	4.98E+01	0.00E+00	0.00E+00	4.98E+01	2.27E-02	2.62E-01
72	OH^-	0.00E+00	0.00E+00	0.00E+00	0.00E+00	0.00E+00	0.00E+00	0.00E+00	0.00E+00	0.00E+00
73	$OH(b)^-$	0.00E+00	0.00E+00	0.00E+00	0.00E+00	0.00E+00	0.00E+00	0.00E+00	0.00E+00	0.00E+00
74	Pb^{+2}	0.00E+00	0.00E+00	0.00E+00	3.48E-01	0.00E+00	0.00E+00	3.48E-01	1.58E-04	1.83E-03
75	Pd^{+2}	0.00E+00	0.00E+00	0.00E+00	5.71E-03	0.00E+00	0.00E+00	5.71E-03	2.60E-06	3.01E-05
76	PO_4^{-3}	0.00E+00	0.00E+00	0.00E+00	3.24E+00	0.00E+00	0.00E+00	3.24E+00	1.47E-03	1.71E-02
77	Resin	0.00E+00	0.00E+00	0.00E+00	0.00E+00	0.00E+00	0.00E+00	0.00E+00	0.00E+00	0.00E+00
78	Rh^{+3}	0.00E+00	0.00E+00	0.00E+00	1.01E-02	0.00E+00	0.00E+00	1.01E-02	4.58E-06	5.30E-05
79	Ru^{+3}	0.00E+00	0.00E+00	0.00E+00	8.66E-01	0.00E+00	0.00E+00	8.66E-01	3.94E-04	4.56E-03
80	S^{+6}	0.00E+00	0.00E+00	0.00E+00	0.00E+00	0.00E+00	0.00E+00	0.00E+00	0.00E+00	0.00E+00
81	SiO2	0.00E+00	0.00E+00	0.00E+00	2.74E+01	0.00E+00	0.00E+00	2.74E+01	1.24E-02	1.44E-01
82	SiO_4^{-4}	0.00E+00	0.00E+00	0.00E+00	9.04E-09	0.00E+00	0.00E+00	9.04E-09	4.11E-12	4.76E-11
83	SO_2	0.00E+00	0.00E+00	0.00E+00	0.00E+00	1.76E-06	1.43E+01	1.43E+01	6.52E-03	7.54E-02
84	SO_4^{-2}	0.00E+00	0.00E+00	0.00E+00	0.00E+00	0.00E+00	0.00E+00	0.00E+00	0.00E+00	0.00E+00
85	Sr^{+2}	0.00E+00	0.00E+00	0.00E+00	1.81E-02	0.00E+00	0.00E+00	1.81E-02	8.21E-06	9.51E-05
86	Sucrose	0.00E+00	0.00E+00	0.00E+00	0.00E+00	0.00E+00	0.00E+00	0.00E+00	0.00E+00	0.00E+00
87	Tl^{+4}	0.00E+00	0.00E+00	0.00E+00	1.65E-03	0.00E+00	0.00E+00	1.65E-03	7.51E-07	8.69E-06
88	Zn^{+2}	0.00E+00	0.00E+00	0.00E+00	1.53E+00	0.00E+00	0.00E+00	1.53E+00	6.97E-04	8.07E-03
89	Zr^{+4}	0.00E+00	0.00E+00	0.00E+00	7.68E-01	0.00E+00	0.00E+00	7.68E-01	3.49E-04	4.04E-03
90										
91	**Components**	**Aqueous Comp**			**Solid Comp**	**Gaseous**		**Total Comp**		
92	**Unit**	**mol/L**	**Lb/gal**	**Lb/day**	**Lb/day**	**mol/L**	**Lb/day**	**Lb/day**	**Mt/day**	**g/sec**
93	**Total**	0.00E+00	0.00E+00	0.00E+00	4.79E+02	0.00E+00	0.00E+00	4.79E+02	2.18E-01	2.52E+00
94	$C_2O_4^{-2}$	0.00E+00	0.00E+00	0.00E+00	4.79E+02	0.00E+00	0.00E+00	4.79E+02	2.18E-01	2.52E+00
95	Formate	0.00E+00	0.00E+00	0.00E+00	9.17E-08	0.00E+00	0.00E+00	9.17E-08	4.17E-11	4.82E-10
96	Acetate	0.00E+00	0.00E+00	0.00E+00	9.32E-08	0.00E+00	0.00E+00	9.32E-08	4.23E-11	4.90E-10
97	Glycolate	0.00E+00	0.00E+00	0.00E+00	4.58E-08	0.00E+00	0.00E+00	4.58E-08	2.08E-11	2.41E-10
98	IDA	0.00E+00	0.00E+00	0.00E+00	1.17E-07	0.00E+00	0.00E+00	1.17E-07	5.31E-11	6.15E-10
99	Citrate	0.00E+00	0.00E+00	0.00E+00	1.00E-07	0.00E+00	0.00E+00	1.00E-07	4.56E-11	5.28E-10
100	HEDTA	0.00E+00	0.00E+00	0.00E+00	8.22E-08	0.00E+00	0.00E+00	8.22E-08	3.74E-11	4.33E-10
101	EDTA	0.00E+00	0.00E+00	0.00E+00	8.84E-08	0.00E+00	0.00E+00	8.84E-08	4.02E-11	4.65E-10
102										
103	**Rad. Comp**	**Aqueous Rad. Comp**			**Solids Rad. Comp (1)**			**Total Rad. Comp (1)**		
104	**Unit**	**Ci/L**	**Ci/day**	**Lb/day**	**Ci/L**	**Ci/day**	**Lb/day**	**Ci/L**	**Ci/day**	**Lb/day**
105	**Total**	0.00E+00	0.00E+00	0.00E+00	1.07E-04	6.18E+03	2.12E+01	1.07E-04	6.18E+03	2.12E+01
106	^{241}Am	0.00E+00	0.00E+00	0.00E+00	2.57E-07	1.48E+01	9.55E-03	2.57E-07	1.48E+01	9.55E-03
107	^{243}Am	0.00E+00	0.00E+00	0.00E+00	2.09E-11	1.20E-03	1.33E-05	2.09E-11	1.20E-03	1.33E-05
108	^{14}C	0.00E+00	0.00E+00	0.00E+00	1.22E-09	7.01E-02	3.46E-05	1.22E-09	7.01E-02	3.46E-05
109	^{60}Co	0.00E+00	0.00E+00	0.00E+00	2.29E-08	1.32E+00	2.58E-06	2.29E-08	1.32E+00	2.58E-06
110	^{243}Cm	0.00E+00	0.00E+00	0.00E+00	2.90E-10	1.67E-02	7.29E-07	2.90E-10	1.67E-02	7.29E-07
111	^{244}Cm	0.00E+00	0.00E+00	0.00E+00	6.58E-09	3.80E-01	1.04E-05	6.58E-09	3.80E-01	1.04E-05
112	^{137}Cs	0.00E+00	0.00E+00	0.00E+00	8.84E-05	5.10E+03	1.30E-01	8.84E-05	5.10E+03	1.30E-01
113	^{152}Eu	0.00E+00	0.00E+00	0.00E+00	1.10E-09	6.36E-02	8.07E-07	1.10E-09	6.36E-02	8.07E-07
114	^{154}Eu	0.00E+00	0.00E+00	0.00E+00	1.20E-07	6.90E+00	5.63E-05	1.20E-07	6.90E+00	5.63E-05
115	^{155}Eu	0.00E+00	0.00E+00	0.00E+00	1.77E-08	1.02E+00	4.64E-06	1.77E-08	1.02E+00	4.64E-06
116	^{3}H	0.00E+00	0.00E+00	0.00E+00	2.96E-08	1.71E+00	3.91E-07	2.96E-08	1.71E+00	3.91E-07
117	^{129}I	0.00E+00	0.00E+00	0.00E+00	5.18E-11	2.99E-03	3.73E-02	5.18E-11	2.99E-03	3.73E-02
118	^{63}Ni	0.00E+00	0.00E+00	0.00E+00	3.42E-09	1.98E-01	7.66E-06	3.42E-09	1.98E-01	7.66E-06
119	^{237}Np	0.00E+00	0.00E+00	0.00E+00	1.70E-10	9.79E-03	3.06E-02	1.70E-10	9.79E-03	3.06E-02
120	^{238}Pu	0.00E+00	0.00E+00	0.00E+00	8.05E-10	4.65E-02	5.98E-06	8.05E-10	4.65E-02	5.98E-06
121	^{239}Pu	0.00E+00	0.00E+00	0.00E+00	7.13E-09	4.12E-01	1.46E-02	7.13E-09	4.12E-01	1.46E-02
122	^{240}Pu	0.00E+00	0.00E+00	0.00E+00	1.88E-09	1.09E-01	1.06E-03	1.88E-09	1.09E-01	1.06E-03
123	^{241}Pu	0.00E+00	0.00E+00	0.00E+00	5.05E-08	2.92E+00	6.24E-05	5.05E-08	2.92E+00	6.24E-05
124	^{242}Pu	0.00E+00	0.00E+00	0.00E+00	1.73E-13	1.00E-05	5.60E-06	1.73E-13	1.00E-05	5.60E-06
125	^{125}Sb	0.00E+00	0.00E+00	0.00E+00	5.28E-08	3.05E+00	6.47E-06	5.28E-08	3.05E+00	6.47E-06
126	^{151}Sm	0.00E+00	0.00E+00	0.00E+00	4.92E-07	2.84E+01	2.38E-03	4.92E-07	2.84E+01	2.38E-03
127	^{126}Sn	0.00E+00	0.00E+00	0.00E+00	2.07E-10	1.19E-02	2.32E-03	2.07E-10	1.19E-02	2.32E-03
128	^{90}Sr	0.00E+00	0.00E+00	0.00E+00	1.64E-05	9.44E+02	1.51E-02	1.64E-05	9.44E+02	1.51E-02
129	^{99}Tc	0.00E+00	0.00E+00	0.00E+00	1.23E-06	7.12E+01	9.26E+00	1.23E-06	7.12E+01	9.26E+00
130	^{232}Th	0.00E+00	0.00E+00	0.00E+00	5.61E-12	3.24E-04	6.49E+00	5.61E-12	3.24E-04	6.49E+00
131	^{233}U	0.00E+00	0.00E+00	0.00E+00	4.59E-10	2.65E-02	6.06E-03	4.59E-10	2.65E-02	6.06E-03
132	^{234}U	0.00E+00	0.00E+00	0.00E+00	2.39E-11	1.38E-03	4.91E-04	2.39E-11	1.38E-03	4.91E-04
133	^{235}U	0.00E+00	0.00E+00	0.00E+00	5.76E-13	3.32E-05	3.39E-02	5.76E-13	3.32E-05	3.39E-02
134	^{236}U	0.00E+00	0.00E+00	0.00E+00	7.93E-13	4.57E-05	1.56E-03	7.93E-13	4.57E-05	1.56E-03
135	^{238}U	0.00E+00	0.00E+00	0.00E+00	1.36E-11	7.82E-04	5.13E+00	1.36E-11	7.82E-04	5.13E+00
136	(1) All radionuclides in gaseous streams are assumed to exist as solid particulate.									

Table C-8 HOP10 Stream Report

Stream Number:	HOP10
Stream Name:	HLW vessel ventilation header offgas
Configuration:	MRQ-05-0049.acmf
Run Date / Time:	12/14/2005 - 1:42:25 PM
Run Data File:	H:\ACM v3.1\MRQ-05-0049\MRQ_05_0049A_Streams.csv

Stream Properties

Variable	Value	Units	
Density	1.15E-03	g/cm^3	(does not include solid phase)
Enthalpy	-1.25E+05	BTU/hr	
Mass Flow	1.15E+03	Lb/hr	
	2.76E+04	Lb/day	
Volumetric Flow	2.00E+03	GPM	(does not include solid phase)
	2.67E+02	ft^3/min	(does not include solid phase)
Molar Flow	4.03E+01	Lbmol/hr	
Molecular Weight	2.85E+01	Lb/Lbmol	
Pressure	1.00E+03	mbar	
Temperature	2.55E+01	C	
Na Molarity	0.00E+00	mol/L	
pH	5.25E+00	pH	
Total TRU	2.10E-11	Ci/L	
Total Activity	4.66E-09	Ci/L	

Component	Aqueous Comp			Solid Comp	Gaseous (1)		Total Comp		
Unit	mol/L	Lb/gal	Lb/day	Lb/day	mol/L	Lb/day	Lb/day	mt/day	g/sec
Total	4.95E-07	7.58E-08	2.18E-01	3.02E-03	4.03E-02	2.76E+04	2.76E+04	1.25E+01	1.45E+02
Ag^{+}	8.93E-16	8.04E-16	2.31E-09	7.25E-07	0.00E+00	0.00E+00	7.27E-07	3.31E-10	3.83E-09
Al^{+3}	1.08E-11	2.43E-12	7.00E-06	1.20E-04	0.00E+00	0.00E+00	1.27E-04	5.78E-08	6.69E-07
As^{+3}	3.94E-15	2.46E-15	7.08E-09	4.67E-08	0.00E+00	0.00E+00	5.37E-08	2.44E-11	2.83E-10
B^{+3}	6.05E-12	5.46E-13	1.57E-06	6.62E-05	0.00E+00	0.00E+00	6.78E-05	3.08E-08	3.57E-07
Ba^{+2}	8.21E-16	9.41E-16	2.71E-09	6.46E-07	0.00E+00	0.00E+00	6.49E-07	2.95E-10	3.41E-09
Bi^{+3}	9.65E-16	1.68E-15	4.84E-09	3.39E-06	0.00E+00	0.00E+00	3.40E-06	1.54E-09	1.79E-08
Ca^{+2}	5.88E-14	1.97E-14	5.66E-08	3.95E-06	0.00E+00	0.00E+00	4.00E-06	1.82E-09	2.11E-08
Cd^{+2}	1.52E-15	1.43E-15	4.10E-09	2.62E-06	0.00E+00	0.00E+00	2.63E-06	1.19E-09	1.38E-08
Ce^{+3}	6.97E-11	8.15E-11	2.35E-04	8.05E-07	0.00E+00	0.00E+00	2.35E-04	1.07E-07	1.24E-06
Cl^{-}	3.29E-11	9.73E-12	2.80E-05	7.84E-07	0.00E+00	0.00E+00	2.88E-05	1.31E-08	1.51E-07
CO	9.78E-111	2.29E-111	6.57E-105	0.00E+00	0.00E+00	0.00E+00	6.57E-105	2.99E-108	3.46E-107
CO_2	7.54E-16	2.77E-16	7.96E-10	0.00E+00	1.18E-32	1.24E-26	7.96E-10	3.62E-13	4.19E-12
CO_3^{-2}	8.65E-12	4.33E-12	1.25E-05	2.19E-04	0.00E+00	0.00E+00	2.31E-04	1.05E-07	1.22E-06
Cr^{+3}	5.22E-12	2.27E-12	6.52E-06	2.02E-06	0.00E+00	0.00E+00	8.54E-06	3.88E-09	4.49E-08
Cu^{+2}	1.51E-15	8.00E-16	2.30E-09	2.74E-07	0.00E+00	0.00E+00	2.76E-07	1.26E-10	1.45E-09
F^{-}	1.16E-12	1.84E-13	5.30E-07	1.43E-05	0.00E+00	0.00E+00	1.48E-05	6.72E-09	7.78E-08
Fe^{+3}	1.73E-11	8.07E-12	2.32E-05	1.16E-04	0.00E+00	0.00E+00	1.39E-04	6.33E-08	7.32E-07
H_2O	4.65E-07	7.29E-06	2.10E-01	0.00E+00	1.21E-03	5.22E+02	5.22E+02	2.37E-01	2.74E+00
$H_2O(b)$	0.00E+00	0.00E+00	0.00E+00	0.00E+00	0.00E+00	0.00E+00	0.00E+00	0.00E+00	0.00E+00
H^{+}	2.73E-12	2.29E-14	6.60E-08	0.00E+00	0.00E+00	0.00E+00	6.60E-08	3.00E-11	3.47E-10
HCL	0.00E+00	0.00E+00	0.00E+00	0.00E+00	0.00E+00	0.00E+00	0.00E+00	0.00E+00	0.00E+00
HCO3-	6.88E-15	3.50E-15	1.01E-08	0.00E+00	0.00E+00	0.00E+00	1.01E-08	4.58E-12	5.30E-11
H2CO3	0.00E+00	0.00E+00	0.00E+00	0.00E+00	0.00E+00	0.00E+00	0.00E+00	0.00E+00	0.00E+00
HF	0.00E+00	0.00E+00	0.00E+00	0.00E+00	0.00E+00	0.00E+00	0.00E+00	0.00E+00	0.00E+00
Hg^{+2}	1.58E-15	2.65E-15	7.61E-09	1.55E-06	0.00E+00	0.00E+00	1.55E-06	7.06E-10	8.17E-09
HNO_3	0.00E+00	0.00E+00	0.00E+00	0.00E+00	0.00E+00	0.00E+00	0.00E+00	0.00E+00	0.00E+00
K^{+}	4.51E-12	1.47E-12	4.23E-06	2.22E-06	0.00E+00	0.00E+00	6.45E-06	2.93E-09	3.40E-08
La^{+3}	4.19E-16	4.85E-16	1.40E-09	1.21E-06	0.00E+00	0.00E+00	1.21E-06	5.52E-10	6.39E-09
Li^{+}	7.45E-14	4.31E-15	1.24E-08	2.81E-05	0.00E+00	0.00E+00	2.81E-05	1.28E-08	1.48E-07
Mg^{+2}	1.24E-14	2.53E-15	7.26E-09	9.77E-07	0.00E+00	0.00E+00	9.85E-07	4.48E-10	5.18E-09
Mn^{+3}	1.35E-14	6.19E-15	1.78E-08	9.48E-06	0.00E+00	0.00E+00	9.50E-06	4.32E-09	5.00E-08
MnO_4^{-}	0.00E+00	0.00E+00	0.00E+00	0.00E+00	0.00E+00	0.00E+00	0.00E+00	0.00E+00	0.00E+00
N_2	3.51E-13	8.20E-14	2.36E-07	0.00E+00	3.09E-02	2.07E+04	2.07E+04	9.43E+00	1.09E+02
Na^{+}	4.70E-09	9.02E-10	2.59E-03	1.74E-04	0.00E+00	0.00E+00	2.77E-03	1.26E-06	1.46E-05
NH3	5.72E-13	8.13E-14	2.34E-07	0.00E+00	0.00E+00	0.00E+00	2.34E-07	1.06E-10	1.23E-09
NH4+	4.59E-14	8.13E-14	1.99E-08	0.00E+00	0.00E+00	0.00E+00	1.99E-08	9.03E-12	1.04E-10
Ni^{+2}	2.36E-12	1.18E-12	3.33E-06	4.22E-06	0.00E+00	0.00E+00	7.55E-06	3.43E-09	3.97E-08
NO	6.16E-36	1.54E-36	4.44E-30	0.00E+00	0.00E+00	0.00E+00	4.44E-30	2.02E-33	2.33E-32
NO_2	8.69E-49	3.34E-49	9.59E-43	0.00E+00	0.00E+00	0.00E+00	9.59E-43	4.36E-46	5.05E-45
NO_2^{-}	2.35E-11	9.01E-12	2.59E-05	3.97E-05	0.00E+00	0.00E+00	6.56E-05	2.98E-08	3.45E-07

CALCULATION SHEET

BY: E. Bernos
DATE: 12/22/05

PROJECT: WTP
JOB NO.: 24590
CALC NO.: 24590-WTP-M4C-FRP-00003
SHEET REV: D
SHEET NO.: C-17

SUBJECT: Integrated Baseline Emissions Report Non-SSFM Represented Constituents Emissions Rate Estimation

	A	B	C	D	E	F	G	H	I	J
69	NO_3^-	3.14E-09	1.62E-09	4.67E-03	3.06E-05	0.00E+00	0.00E+00	4.70E-03	2.14E-06	2.47E-05
70	O_2	1.13E-13	3.02E-14	8.69E-08	0.00E+00	8.20E-03	6.30E+03	6.30E+03	2.86E+00	3.31E+01
71	O^-	0.00E+00	0.00E+00	0.00E+00	1.91E-04	0.00E+00	0.00E+00	1.91E-04	8.68E-08	1.00E-06
72	OH^-	1.80E-09	2.55E-10	7.33E-04	6.28E-04	0.00E+00	0.00E+00	1.36E-03	6.19E-07	7.16E-06
73	$OH(b)^-$	2.39E-11	3.40E-12	9.77E-06	3.96E-26	0.00E+00	0.00E+00	9.77E-06	4.44E-09	5.14E-08
74	Pb^{+2}	5.52E-15	9.54E-15	2.74E-08	5.54E-06	0.00E+00	0.00E+00	5.57E-06	2.53E-09	2.93E-08
75	Pd^{+2}	4.27E-16	3.79E-16	1.09E-09	2.27E-07	0.00E+00	0.00E+00	2.29E-07	1.04E-10	1.20E-09
76	PO_4^{-3}	4.42E-13	3.50E-13	1.01E-06	2.50E-05	0.00E+00	0.00E+00	2.60E-05	1.18E-08	1.37E-07
77	Resin	0.00E+00	0.00E+00	0.00E+00	0.00E+00	0.00E+00	0.00E+00	0.00E+00	0.00E+00	0.00E+00
78	Rh^{+3}	4.13E-16	3.54E-16	1.02E-09	7.36E-08	0.00E+00	0.00E+00	7.46E-08	3.39E-11	3.93E-10
79	Ru^{+3}	6.13E-16	5.17E-16	1.49E-09	6.83E-07	0.00E+00	0.00E+00	6.84E-07	3.11E-10	3.60E-09
80	S^{+6}	0.00E+00	0.00E+00	0.00E+00	1.70E-23	0.00E+00	0.00E+00	1.70E-23	7.75E-27	8.97E-26
81	SiO2	8.35E-14	4.19E-14	1.20E-07	1.26E-03	0.00E+00	0.00E+00	1.26E-03	5.72E-07	6.63E-06
82	SiO_4^{-4}	6.38E-26	4.90E-26	1.41E-19	4.37E-13	0.00E+00	0.00E+00	4.37E-13	1.99E-16	2.30E-15
83	SO_2	9.36E-52	5.00E-52	1.44E-45	0.00E+00	0.00E+00	0.00E+00	1.44E-45	6.54E-49	7.57E-48
84	SO_4^{-2}	1.05E-12	8.45E-13	2.43E-06	9.18E-06	0.00E+00	0.00E+00	1.16E-05	5.28E-09	6.11E-08
85	Sr^{+2}	2.77E-16	2.02E-16	5.82E-10	3.61E-07	0.00E+00	0.00E+00	3.62E-07	1.64E-10	1.90E-09
86	Sucrose	0.00E+00	0.00E+00	0.00E+00	0.00E+00	0.00E+00	0.00E+00	0.00E+00	0.00E+00	0.00E+00
87	Ti^{+4}	6.88E-16	2.75E-16	7.91E-10	6.11E-07	0.00E+00	0.00E+00	6.11E-07	2.78E-10	3.22E-09
88	Zn^{+2}	2.57E-15	1.40E-15	4.04E-09	3.07E-05	0.00E+00	0.00E+00	3.07E-05	1.40E-08	1.62E-07
89	Zr^{+4}	1.90E-15	1.45E-15	4.16E-09	2.92E-05	0.00E+00	0.00E+00	2.92E-05	1.33E-08	1.54E-07
90										
91	Components	Aqueous Comp			Solid Comp	Gaseous		Total Comp		
92	Unit	mol/L	Lb/gal	Lb/day	Lb/day	mol/L	Lb/day	Lb/day	Mt/day	g/sec
93	Total	5.56E-13	4.08E-13	1.17E-06	1.09E-04	0.00E+00	0.00E+00	1.10E-04	5.01E-08	5.80E-07
94	$C_2O_4^{-2}$	5.56E-13	4.08E-13	1.17E-06	1.09E-04	0.00E+00	0.00E+00	1.10E-04	5.01E-08	5.80E-07
95	Formate	3.96E-25	1.49E-25	4.27E-19	2.02E-14	0.00E+00	0.00E+00	2.02E-14	9.17E-18	1.06E-16
96	Acetate	3.07E-25	1.51E-25	4.34E-19	2.05E-14	0.00E+00	0.00E+00	2.05E-14	9.32E-18	1.08E-16
97	Glycolate	2.04E-24	1.28E-24	3.68E-18	1.01E-14	0.00E+00	0.00E+00	1.01E-14	4.58E-16	5.30E-17
98	IDA	9.56E-25	1.06E-24	3.05E-18	2.57E-14	0.00E+00	0.00E+00	2.57E-14	1.17E-17	1.35E-16
99	Citrate	8.73E-26	1.40E-25	4.03E-19	2.21E-14	0.00E+00	0.00E+00	2.21E-14	1.00E-17	1.16E-16
100	HEDTA	4.09E-25	9.50E-25	2.73E-18	1.81E-14	0.00E+00	0.00E+00	1.81E-14	8.22E-18	9.52E-17
101	EDTA	4.92E-26	1.20E-25	3.45E-19	1.94E-14	0.00E+00	0.00E+00	1.94E-14	8.84E-18	1.02E-16
102										
103	Rad. Comp	Aqueous Rad. Comp			Solids Rad. Comp (1)			Total Rad. Comp (1)		
104	Unit	Ci/L	Ci/day	Lb/day	Ci/L	Ci/day	Lb/day	Ci/L	Ci/day	Lb/day
105	Total	2.46E-09	2.68E-02	1.03E-06	2.20E-09	2.39E-02	1.75E-04	4.66E-09	5.07E-02	1.76E-04
106	^{241}Am	8.37E-15	9.11E-08	5.86E-11	1.58E-11	1.72E-04	1.11E-07	1.58E-11	1.72E-04	1.11E-07
107	^{243}Am	5.47E-18	5.95E-11	6.58E-13	1.28E-15	1.39E-08	1.54E-10	1.28E-15	1.40E-08	1.54E-10
108	^{14}C	1.72E-16	1.87E-09	9.23E-13	1.12E-15	1.22E-08	6.00E-12	1.29E-15	1.40E-08	6.92E-12
109	^{60}Co	1.13E-15	1.23E-08	2.39E-14	1.75E-12	1.90E-05	3.71E-11	1.75E-12	1.90E-05	3.71E-11
110	^{243}Cm	9.07E-19	9.87E-12	4.31E-16	2.21E-14	2.41E-07	1.05E-11	2.21E-14	2.41E-07	1.05E-11
111	^{244}Cm	2.15E-17	2.34E-10	6.37E-15	5.03E-13	5.47E-06	1.49E-10	5.03E-13	5.48E-06	1.49E-10
112	^{137}Cs	2.46E-09	2.68E-02	6.80E-07	3.57E-10	3.89E-03	9.87E-08	2.82E-09	3.07E-02	7.78E-07
113	^{152}Eu	6.30E-17	6.86E-10	8.70E-15	8.41E-14	9.16E-07	1.16E-11	8.42E-14	9.17E-07	1.16E-11
114	^{154}Eu	1.31E-14	1.42E-07	1.16E-12	9.12E-12	9.92E-05	8.10E-10	9.13E-12	9.94E-05	8.11E-10
115	^{155}Eu	3.77E-15	4.11E-08	1.87E-13	1.35E-12	1.47E-05	6.67E-11	1.35E-12	1.47E-05	6.69E-11
116	^{3}H	3.68E-15	4.01E-08	9.20E-15	2.84E-14	3.10E-07	7.11E-14	3.21E-14	3.50E-07	8.03E-14
117	^{129}I	5.27E-18	5.73E-11	7.16E-10	5.54E-17	6.03E-10	7.52E-09	6.06E-17	6.60E-10	8.24E-09
118	^{63}Ni	2.02E-14	2.20E-07	8.54E-12	3.03E-13	3.30E-06	1.28E-10	3.23E-13	3.52E-06	1.37E-10
119	^{237}Np	6.65E-18	7.24E-11	2.27E-10	1.29E-14	1.41E-07	4.41E-07	1.30E-14	1.41E-07	4.41E-07
120	^{238}Pu	3.75E-17	4.08E-10	5.25E-14	6.15E-14	6.69E-07	8.61E-11	6.15E-14	6.70E-07	8.62E-11
121	^{239}Pu	5.18E-16	5.64E-09	2.00E-10	5.44E-13	5.93E-06	2.11E-07	5.45E-13	5.93E-06	2.11E-07
122	^{240}Pu	1.34E-16	1.46E-09	1.42E-11	1.44E-13	1.56E-06	1.52E-08	1.44E-13	1.57E-06	1.52E-08
123	^{241}Pu	2.82E-15	3.07E-08	6.57E-13	3.86E-12	4.20E-05	8.99E-10	3.86E-12	4.20E-05	8.99E-10
124	^{242}Pu	1.42E-20	1.55E-13	8.66E-14	1.32E-17	1.44E-10	8.06E-11	1.32E-17	1.44E-10	8.07E-11
125	^{125}Sb	7.80E-15	8.49E-08	1.80E-13	5.59E-12	6.09E-05	1.29E-10	5.60E-12	6.10E-05	1.30E-10
126	^{151}Sm	1.09E-13	1.19E-06	9.97E-11	6.77E-11	7.37E-04	6.17E-08	6.78E-11	7.38E-04	6.18E-08
127	^{126}Sn	1.24E-16	1.35E-09	2.62E-10	2.62E-14	2.85E-07	5.54E-08	2.63E-14	2.87E-07	5.56E-08
128	^{90}Sr	3.25E-12	3.54E-05	5.65E-10	1.73E-09	1.88E-02	3.01E-07	1.73E-09	1.89E-02	3.01E-07
129	^{99}Tc	2.16E-14	2.35E-07	3.06E-08	3.97E-12	4.32E-05	5.62E-06	3.99E-12	4.34E-05	5.65E-06
130	^{232}Th	2.02E-19	2.20E-12	4.41E-08	4.28E-16	4.66E-09	9.35E-05	4.29E-16	4.67E-09	9.35E-05
131	^{233}U	6.74E-18	7.34E-11	1.66E-11	3.51E-14	3.82E-07	8.74E-08	3.51E-14	3.82E-07	8.74E-08
132	^{234}U	4.78E-18	5.21E-11	1.85E-11	1.82E-15	1.99E-08	7.05E-09	1.83E-15	1.99E-08	7.07E-09
133	^{235}U	1.88E-19	2.05E-12	2.09E-09	4.38E-17	4.77E-10	4.87E-07	4.40E-17	4.79E-10	4.89E-07
134	^{236}U	3.23E-19	3.51E-12	1.20E-10	6.02E-17	6.56E-10	2.24E-08	6.05E-17	6.59E-10	2.25E-08
135	^{238}U	3.73E-18	4.07E-11	2.67E-07	1.03E-15	1.12E-08	7.37E-05	1.04E-15	1.13E-08	7.40E-05
136	(1) All radionuclides in gaseous streams are assumed to exist as solid particulate.									

Table C-9 HOP31 Stream Report

3	Stream Number:	HOP31
4	Stream Name:	Stack extraction fan discharge to stack
5	Configuration:	MRQ-05-0049.acmf
6	Run Date / Time:	12/14/2005 - 1:42:25 PM
7	Run Data File:	H:\ACM v3.1\MRQ-05-0049\MRQ_05_0049A_Streams.csv

	Variable	Value	Units	
10	Density	7.88E-04	g/cm^3	(does not include solid phase)
12	Enthalpy	-3.70E+06	BTU/hr	
13	Mass Flow	1.19E+04	Lb/hr	
14		2.85E+05	Lb/day	
15	Volumetric Flow	3.01E+04	GPM	(does not include solid phase)
16		4.02E+03	ft^3/min	(does not include solid phase)
17	Molar Flow	4.26E+02	Lbmol/hr	
18	Molecular Weight	2.79E+01	Lb/Lbmol	
19	Pressure	9.86E+02	mbar	
20	Temperature	1.46E+02	C	
21	Na Molarity	0.00E+00	mol/L	
22	pH	-3.18E+00	pH	
23	Total TRU	1.45E-17	Ci/L	
24	Total Activity	5.58E-09	Ci/L	

26	Component	Aqueous Comp			Solid Comp	Gaseous (1)		Total Comp		
27	Unit	mol/L	Lb/gal	Lb/day	Lb/day	mol/L	Lb/day	Lb/day	mt/day	g/sec
28	Total	6.89E-14	1.83E-14	5.57E-07	2.99E+00	2.83E-02	2.85E+05	2.85E+05	1.29E+02	1.50E+03
29	Ag^+	2.97E-24	2.67E-24	1.16E-16	6.73E-11	0.00E+00	0.00E+00	6.73E-11	3.06E-14	3.54E-13
30	Al^{+3}	3.99E-20	8.98E-21	3.89E-13	8.09E-10	0.00E+00	0.00E+00	8.10E-10	3.68E-13	4.26E-12
31	As^{+3}	1.45E-23	9.09E-24	3.93E-16	7.39E-12	0.00E+00	0.00E+00	7.39E-12	3.36E-15	3.89E-14
32	B^{+3}	2.23E-20	2.01E-21	8.72E-14	1.90E-09	0.00E+00	0.00E+00	1.90E-09	8.65E-13	1.00E-11
33	Ba^{+2}	3.03E-24	3.47E-24	1.50E-16	6.29E-12	0.00E+00	0.00E+00	6.29E-12	2.86E-15	3.31E-14
34	Bi^{+3}	3.21E-24	5.59E-24	2.42E-16	1.88E-10	0.00E+00	0.00E+00	1.88E-10	8.53E-14	9.87E-13
35	Ca^{+2}	2.17E-22	7.27E-23	3.14E-15	6.76E-11	0.00E+00	0.00E+00	6.76E-11	3.07E-14	3.55E-13
36	Cd^{+2}	4.59E-24	4.31E-24	1.86E-16	4.64E-10	0.00E+00	0.00E+00	4.64E-10	2.11E-13	2.44E-12
37	Ce^{+3}	4.93E-20	5.77E-20	2.50E-12	8.33E-14	0.00E+00	0.00E+00	2.56E-12	1.17E-15	1.36E-14
38	Cl^-	1.09E-19	3.23E-20	1.40E-12	3.92E-14	0.00E+00	0.00E+00	1.44E-12	6.54E-16	7.56E-15
39	CO	6.50E-112	1.52E-112	6.57E-105	0.00E+00	2.79E-06	2.82E-01	2.82E-01	1.28E-04	1.49E-03
40	CO_2	0.00E+00	0.00E+00	0.00E+00	0.00E+00	5.63E-05	8.95E+02	8.95E+02	4.07E-01	4.71E+00
41	CO_3^{-2}	5.87E-21	2.94E-21	1.27E-13	2.23E-12	0.00E+00	0.00E+00	2.36E-12	1.07E-15	1.24E-14
42	Cr^{+3}	1.93E-20	8.37E-21	3.62E-13	1.47E-10	0.00E+00	0.00E+00	1.48E-10	6.71E-14	7.76E-13
43	Cu^{+2}	5.02E-24	2.66E-24	1.15E-16	4.68E-12	0.00E+00	0.00E+00	4.68E-12	2.13E-15	2.46E-14
44	F^-	4.29E-21	6.80E-22	2.94E-14	7.92E-13	0.00E+00	0.00E+00	8.21E-13	3.73E-16	4.32E-15
45	Fe^{+3}	6.40E-20	2.98E-20	1.29E-12	6.17E-10	0.00E+00	0.00E+00	6.18E-10	2.81E-13	3.25E-12
46	H_2O	0.00E+00	0.00E+00	0.00E+00	0.00E+00	2.69E-03	1.75E+04	1.75E+04	7.96E+00	9.21E+01
47	$H_2O(b)$	0.00E+00	0.00E+00	0.00E+00	0.00E+00	0.00E+00	0.00E+00	0.00E+00	0.00E+00	0.00E+00
48	H^+	1.93E-21	1.62E-23	7.02E-16	0.00E+00	0.00E+00	0.00E+00	7.02E-16	3.19E-19	3.69E-18
49	HCL	0.00E+00	0.00E+00	0.00E+00	0.00E+00	3.75E-10	4.94E-03	4.94E-03	2.25E-06	2.60E-05
50	HCO3-	5.53E-22	2.82E-22	1.22E-14	4.03E-29	0.00E+00	0.00E+00	1.22E-14	5.54E-18	6.41E-17
51	H2CO3	0.00E+00	0.00E+00	0.00E+00	0.00E+00	0.00E+00	0.00E+00	0.00E+00	0.00E+00	0.00E+00
52	HF	0.00E+00	0.00E+00	0.00E+00	0.00E+00	5.85E-10	4.23E-03	4.23E-03	1.92E-06	2.22E-05
53	Hg^{+2}	1.05E-19	1.76E-19	7.61E-12	2.03E-03	0.00E+00	0.00E+00	2.03E-03	9.20E-07	1.07E-05
54	HNO_3	0.00E+00	0.00E+00	0.00E+00	0.00E+00	0.00E+00	0.00E+00	0.00E+00	0.00E+00	0.00E+00
55	K^+	1.36E-20	4.45E-21	1.92E-13	7.17E-10	0.00E+00	0.00E+00	7.17E-10	3.26E-13	3.77E-12
56	La^{+3}	3.03E-25	3.51E-25	1.52E-17	1.09E-13	0.00E+00	0.00E+00	1.09E-13	4.94E-17	5.72E-16
57	Li^+	2.47E-22	1.43E-23	6.20E-16	8.36E-10	0.00E+00	0.00E+00	8.36E-10	3.80E-13	4.40E-12
58	Mg^{+2}	4.60E-23	9.32E-24	4.03E-16	2.17E-11	0.00E+00	0.00E+00	2.17E-11	9.86E-15	1.14E-13
59	Mn^{+3}	4.99E-23	2.29E-23	9.89E-16	1.18E-10	0.00E+00	0.00E+00	1.18E-10	5.35E-14	6.19E-13
60	MnO_4^-	0.00E+00	0.00E+00	0.00E+00	0.00E+00	0.00E+00	0.00E+00	0.00E+00	0.00E+00	0.00E+00
61	N_2	2.33E-14	5.45E-15	2.36E-07	0.00E+00	2.01E-02	2.03E+05	2.03E+05	9.24E+01	1.07E+03
62	Na^+	1.56E-17	3.00E-18	1.30E-10	8.08E-09	0.00E+00	0.00E+00	8.20E-09	3.73E-12	4.32E-11
63	NH3	3.80E-14	5.40E-15	2.34E-07	0.00E+00	2.83E-07	1.74E+00	1.74E+00	7.91E-04	9.15E-03
64	NH4+	1.52E-20	5.40E-15	9.93E-14	1.54E-23	0.00E+00	0.00E+00	9.93E-14	4.51E-17	5.22E-16
65	Ni^{+2}	6.72E-21	4.27E-21	1.85E-13	1.13E-10	0.00E+00	0.00E+00	1.13E-10	5.13E-14	5.93E-13
66	NO	4.09E-37	1.03E-37	4.44E-30	0.00E+00	1.83E-06	1.98E+01	1.98E+01	9.00E-03	1.04E-01
67	NO_2	5.77E-50	2.22E-50	9.59E-43	0.00E+00	1.71E-07	2.84E+00	2.84E+00	1.29E-03	1.49E-02
68	NO_2^-	8.66E-20	3.33E-20	1.44E-12	2.21E-12	0.00E+00	0.00E+00	3.65E-12	1.66E-15	1.92E-14
69	NO_3^-	1.16E-17	6.00E-18	2.60E-10	1.70E-12	0.00E+00	0.00E+00	2.61E-10	1.19E-13	1.37E-12
70	O_2	7.52E-15	2.01E-15	8.69E-08	0.00E+00	5.43E-03	6.28E+04	6.28E+04	2.85E+01	3.30E+02
71	O^-	0.00E+00	0.00E+00	0.00E+00	1.79E+00	0.00E+00	0.00E+00	1.79E+00	8.15E-04	9.43E-03
72	OH^-	8.83E-16	9.42E-19	4.07E-11	3.49E-11	0.00E+00	0.00E+00	7.56E-11	3.44E-14	3.98E-13
73	$OH(b)^-$	8.84E-20	1.25E-20	5.43E-13	2.20E-33	0.00E+00	0.00E+00	5.43E-13	2.47E-16	2.85E-15

CALCULATION SHEET

BY: E. Berrios
DATE: 12/22/05

PROJECT: WTP
JOB NO.: 24590
CALC NO.: 24590-WTP-M4C-FRP-00003
SHEET REV: D
SHEET NO.: C-19

SUBJECT: Integrated Baseline Emissions Report Non-SSFM Represented Constituents Emissions Rate Estimation

	A	B	C	D	E	F	G	H	I	J
74	Pb^{+2}	1.83E-23	3.17E-23	1.37E-15	2.10E-10	0.00E+00	0.00E+00	2.10E-10	9.56E-14	1.11E-12
75	Pd^{+2}	3.02E-25	2.68E-25	1.18E-17	6.89E-15	0.00E+00	0.00E+00	6.90E-15	3.14E-18	3.63E-17
76	PO_4^{-3}	1.63E-21	1.29E-21	5.60E-14	4.97E-10	0.00E+00	0.00E+00	4.97E-10	2.26E-13	2.61E-12
77	Resin	0.00E+00	0.00E+00	0.00E+00	0.00E+00	0.00E+00	0.00E+00	0.00E+00	0.00E+00	0.00E+00
78	Rh^{+3}	2.74E-25	2.36E-25	1.02E-17	3.19E-14	0.00E+00	0.00E+00	3.19E-14	1.45E-17	1.68E-16
79	Ru^{+3}	2.26E-24	1.91E-24	8.27E-17	6.68E-10	0.00E+00	0.00E+00	6.68E-10	3.04E-13	3.52E-12
80	S^{+6}	0.00E+00	0.00E+00	0.00E+00	1.20E+00	0.00E+00	0.00E+00	1.20E+00	5.43E-04	6.29E-03
81	SiO2	3.08E-22	1.55E-22	6.69E-15	4.68E-09	0.00E+00	0.00E+00	4.68E-09	2.13E-12	2.46E-11
82	SiO_4^{-4}	2.36E-34	1.81E-34	7.84E-27	1.55E-18	0.00E+00	0.00E+00	1.55E-18	7.03E-22	8.14E-21
83	SO_2	6.22E-53	3.32E-53	1.44E-45	0.00E+00	5.16E-07	1.19E+01	1.19E+01	5.43E-03	6.28E-02
84	SO_4^{-2}	3.89E-21	3.12E-21	1.35E-13	5.10E-13	0.00E+00	0.00E+00	6.45E-13	2.93E-16	3.39E-15
85	Sr^{+2}	1.02E-24	7.47E-25	3.23E-17	2.30E-12	0.00E+00	0.00E+00	2.30E-12	1.05E-15	1.21E-14
86	Sucrose	0.00E+00	0.00E+00	0.00E+00	0.00E+00	0.00E+00	0.00E+00	0.00E+00	0.00E+00	0.00E+00
87	Tl^{+4}	4.58E-25	1.83E-25	7.91E-18	6.27E-15	0.00E+00	0.00E+00	6.28E-15	2.85E-18	3.30E-17
88	Zn^{+2}	9.51E-24	5.19E-24	2.24E-16	3.89E-10	0.00E+00	0.00E+00	3.89E-10	1.77E-13	2.05E-12
89	Zr^{+4}	7.01E-24	5.34E-24	2.31E-16	1.44E-10	0.00E+00	0.00E+00	1.44E-10	6.54E-14	7.57E-13
90										
91	Components	Aqueous Comp			Solid Comp	Gaseous		Total Comp		
92	Unit	mol/L	Lb/gal	Lb/day	Lb/day	mol/L	Lb/day	Lb/day	Mt/day	g/sec
93	Total	2.05E-17	1.51E-17	6.53E-10	6.66E-04	0.00E+00	0.00E+00	6.66E-04	3.03E-07	3.50E-06
94	$C_2O_4^{-2}$	2.05E-17	1.51E-17	6.53E-10	6.65E-04	0.00E+00	0.00E+00	6.65E-04	3.02E-07	3.50E-06
95	Formate	1.31E-27	4.94E-28	2.14E-20	4.58E-09	0.00E+00	0.00E+00	4.58E-09	2.08E-12	2.41E-11
96	Acetate	1.02E-27	5.02E-28	2.17E-20	4.66E-09	0.00E+00	0.00E+00	4.66E-09	2.12E-12	2.45E-11
97	Glycolate	6.78E-27	4.25E-27	1.84E-19	2.29E-09	0.00E+00	0.00E+00	2.29E-09	1.04E-12	1.20E-11
98	IDA	6.35E-26	7.06E-26	3.05E-18	1.17E-07	0.00E+00	0.00E+00	1.17E-07	5.31E-11	6.15E-10
99	Citrate	2.90E-28	4.65E-28	2.01E-20	5.02E-09	0.00E+00	0.00E+00	5.02E-09	2.28E-12	2.64E-11
100	HEDTA	1.36E-27	3.16E-27	1.37E-19	4.11E-09	0.00E+00	0.00E+00	4.11E-09	1.87E-12	2.16E-11
101	EDTA	1.63E-28	3.98E-28	1.72E-20	4.42E-09	0.00E+00	0.00E+00	4.42E-09	2.01E-12	2.32E-11
102										
103	Rad. Comp	Aqueous Rad. Comp			Solids Rad. Comp (1)			Total Rad. Comp (1)		
104	Unit	Ci/L	Ci/day	Lb/day	Ci/L	Ci/day	Lb/day	Ci/L	Ci/day	Lb/day
105	Total	2.20E-16	3.60E-08	1.70E-12	5.58E-09	9.15E-01	6.87E-05	5.58E-09	9.15E-01	6.87E-05
106	^{241}Am	3.09E-23	5.06E-15	3.26E-18	1.15E-17	1.88E-09	1.21E-12	1.15E-17	1.88E-09	1.21E-12
107	^{243}Am	2.02E-26	3.31E-18	3.65E-20	9.33E-22	1.53E-13	1.69E-15	9.33E-22	1.53E-13	1.69E-15
108	^{14}C	1.14E-17	1.87E-09	9.23E-13	4.28E-10	7.01E-02	3.46E-05	4.28E-10	7.01E-02	3.46E-05
109	^{60}Co	3.75E-24	6.14E-16	1.20E-21	6.31E-18	1.03E-09	2.01E-15	6.31E-18	1.03E-09	2.01E-15
110	^{243}Cm	3.35E-27	5.48E-19	2.39E-23	1.30E-20	2.12E-12	9.26E-17	1.30E-20	2.12E-12	9.26E-17
111	^{244}Cm	7.92E-26	1.30E-17	3.54E-22	2.95E-19	4.83E-11	1.32E-15	2.95E-19	4.83E-11	1.32E-15
112	^{137}Cs	8.17E-18	1.34E-09	3.40E-14	2.16E-14	3.54E-06	8.99E-11	2.16E-14	3.54E-06	9.00E-11
113	^{152}Eu	2.33E-25	3.81E-17	4.83E-22	4.93E-20	8.08E-12	1.03E-16	4.93E-20	8.08E-12	1.03E-16
114	^{154}Eu	4.82E-23	7.89E-15	6.44E-20	5.35E-18	8.76E-10	7.15E-15	5.35E-18	8.76E-10	7.15E-15
115	^{155}Eu	1.39E-23	2.28E-15	1.04E-20	7.93E-19	1.30E-10	5.90E-16	7.93E-19	1.30E-10	5.90E-16
116	^{3}H	2.00E-16	3.28E-08	7.52E-15	5.16E-09	8.45E-01	1.94E-07	5.16E-09	8.45E-01	1.94E-07
117	^{129}I	3.50E-22	5.73E-14	7.16E-13	1.66E-14	2.72E-06	3.39E-05	1.66E-14	2.72E-06	3.39E-05
118	^{63}Ni	7.47E-23	1.22E-14	4.75E-19	5.69E-19	9.32E-11	3.62E-15	5.69E-19	9.32E-11	3.62E-15
119	^{237}Np	2.46E-26	4.02E-18	1.26E-17	7.59E-21	1.24E-12	3.89E-12	7.59E-21	1.24E-12	3.89E-12
120	^{238}Pu	1.38E-25	2.27E-17	2.92E-21	3.60E-20	5.90E-12	7.60E-16	3.60E-20	5.90E-12	7.60E-16
121	^{239}Pu	1.91E-24	3.13E-16	1.11E-17	3.19E-19	5.23E-11	1.86E-12	3.19E-19	5.23E-11	1.86E-12
122	^{240}Pu	4.96E-25	8.12E-17	7.89E-19	8.43E-20	1.38E-11	1.34E-13	8.43E-20	1.38E-11	1.34E-13
123	^{241}Pu	1.04E-23	1.70E-15	3.65E-20	2.26E-18	3.70E-10	7.93E-15	2.26E-18	3.70E-10	7.93E-15
124	^{242}Pu	5.25E-29	8.60E-21	4.81E-21	7.76E-24	1.27E-15	7.12E-16	7.76E-24	1.27E-15	7.12E-16
125	^{125}Sb	2.88E-23	4.72E-15	1.00E-20	2.33E-17	3.82E-09	8.11E-15	2.33E-17	3.82E-09	8.11E-15
126	^{151}Sm	7.73E-23	1.27E-14	1.06E-18	2.64E-19	4.32E-11	3.62E-15	2.64E-19	4.32E-11	3.62E-15
127	^{126}Sn	4.58E-25	7.50E-17	1.46E-17	9.30E-21	1.52E-12	2.96E-13	9.30E-21	1.52E-12	2.96E-13
128	^{90}Sr	1.20E-20	1.97E-12	3.14E-17	7.34E-16	1.20E-07	1.92E-12	7.34E-16	1.20E-07	1.92E-12
129	^{99}Tc	7.99E-23	1.31E-14	1.70E-15	3.10E-16	5.07E-08	6.59E-09	3.10E-16	5.07E-08	6.59E-09
130	^{232}Th	1.43E-28	2.34E-20	4.69E-16	2.77E-24	4.53E-16	9.08E-12	2.77E-24	4.53E-16	9.08E-12
131	^{233}U	2.49E-26	4.08E-18	9.32E-19	2.06E-20	3.37E-12	7.70E-13	2.06E-20	3.37E-12	7.70E-13
132	^{234}U	1.77E-26	2.89E-18	1.03E-18	1.07E-21	1.76E-13	6.23E-14	1.07E-21	1.76E-13	6.23E-14
133	^{235}U	6.96E-28	1.14E-19	1.16E-16	2.58E-23	4.22E-15	4.31E-12	2.58E-23	4.22E-15	4.31E-12
134	^{236}U	1.19E-27	1.95E-19	6.85E-18	3.55E-23	5.81E-15	1.98E-13	3.55E-23	5.81E-15	1.98E-13
135	^{238}U	1.38E-26	2.26E-18	1.48E-14	6.07E-22	9.94E-14	6.52E-10	6.07E-22	9.94E-14	6.52E-10
136	(1) All radionuclides in gaseous streams are assumed to exist as solid particulate.									

CALCULATION SHEET

BY: E. Berrios
DATE: 12/22/05

PROJECT: WTP
JOB NO.: 24590
CALC NO.: 24590-WTP-M4C-FRP-00003
SHEET REV: D
SHEET NO.: C-20

SUBJECT: Integrated Baseline Emissions Report Non-SSFM Represented Constituents Emissions Rate Estimation

	A	B	C	D	E	F	G	H	I	J
1	**Table C-10 LCP01 Stream Report**									
3	Stream Number:		LCP01							
4	Stream Name:		LAW concentrate							
5	Configuration:		MRQ-05-0049.acmf							
6	Run Date / Time:		12/14/2005 - 1:42:25 PM							
7	Run Data File:		H:\ACM v3.1\MRQ-05-0049\MRQ_05_0049A_Streams.csv							
8										
9	Stream Properties									
10	Variable	Value	Units							
11	Density	1.44E+00	g/cm^3	(does not include solid phase)						
12	Enthalpy	-2.25E+07	BTU/hr							
13	Mass Flow	4.29E+03	Lb/hr							
14		1.03E+05	Lb/day							
15	Volumetric Flow	5.85E+00	GPM	(does not include solid phase)						
16		7.82E-01	ft^3/min	(does not include solid phase)						
17	Molar Flow	1.92E+02	Lbmol/hr							
18	Molecular Weight	2.19E+01	Lb/Lbmol							
19	Pressure	1.00E+03	mbar							
20	Temperature	5.34E+01	C							
21	Na Molarity	7.95E+00	mol/L							
22	pH	1.46E+01	pH							
23	Total TRU	8.08E-04	Ci/L							
24	Total Activity	1.96E-01	Ci/L							
25										
26	Component	Aqueous Comp			Solid Comp	Gaseous (1)		Total Comp		
27	Unit	mol/L	Lb/gal	Lb/day	Lb/day	mol/L	Lb/day	Lb/day	mt/day	g/sec
28	Total	6.54E+01	1.19E+01	1.01E+05	7.57E+02	0.00E+00	0.00E+00	1.01E+05	4.61E+01	5.33E+02
29	Ag^+	5.93E-05	5.34E-05	4.50E-01	1.57E-02	0.00E+00	0.00E+00	4.66E-01	2.12E-04	2.45E-03
30	Al^{+3}	7.19E-01	1.62E-01	1.36E+03	3.63E+01	0.00E+00	0.00E+00	1.40E+03	6.36E-01	7.37E+00
31	As^{+3}	2.62E-04	1.64E-04	1.38E+00	2.72E-01	0.00E+00	0.00E+00	1.65E+00	7.50E-04	8.68E-03
32	B^{+3}	4.34E-03	3.92E-04	3.30E+00	1.12E+02	0.00E+00	0.00E+00	1.16E+02	5.26E-02	6.09E-01
33	Ba^{+2}	5.45E-05	6.25E-05	5.27E-01	5.68E-03	0.00E+00	0.00E+00	5.32E-01	2.42E-04	2.80E-03
34	Bi^{+3}	6.44E-05	1.12E-04	9.46E-01	1.38E-02	0.00E+00	0.00E+00	9.60E-01	4.36E-04	5.05E-03
35	Ca^{+2}	8.12E-03	2.71E-03	2.29E+01	3.05E+01	0.00E+00	0.00E+00	5.34E+01	2.43E-02	2.81E-01
36	Cd^{+2}	1.01E-04	9.52E-05	8.02E-01	1.06E-01	0.00E+00	0.00E+00	9.08E-01	4.13E-04	4.78E-03
37	Ce^{+3}	2.42E-03	2.83E-03	2.39E+01	1.20E-01	0.00E+00	0.00E+00	2.40E+01	1.09E-02	1.26E-01
38	Cl^-	1.35E-01	4.00E-02	3.37E+02	4.48E-04	0.00E+00	0.00E+00	3.37E+02	1.53E-01	1.77E+00
39	CO	0.00E+00	0.00E+00	0.00E+00	0.00E+00	0.00E+00	0.00E+00	0.00E+00	0.00E+00	0.00E+00
40	CO_2	0.00E+00	0.00E+00	0.00E+00	0.00E+00	0.00E+00	0.00E+00	0.00E+00	0.00E+00	0.00E+00
41	CO_3^{-2}	5.79E-01	2.90E-01	2.44E+03	5.03E-02	0.00E+00	0.00E+00	2.44E+03	1.11E+00	1.28E+01
42	Cr^{+3}	1.74E-02	7.55E-03	6.36E+01	1.69E+00	0.00E+00	0.00E+00	6.53E+01	2.97E-02	3.44E-01
43	Cu^{+2}	1.00E-04	5.32E-05	4.48E-01	2.38E-03	0.00E+00	0.00E+00	4.50E-01	2.05E-04	2.37E-03
44	F^-	6.59E-02	1.04E-02	8.80E+01	8.16E-03	0.00E+00	0.00E+00	8.80E+01	4.00E-02	4.63E-01
45	Fe^{+3}	3.17E-03	1.48E-03	1.25E+01	2.28E+01	0.00E+00	0.00E+00	3.52E+01	1.60E-02	1.85E-01
46	H_2O	4.67E+01	7.02E+00	5.91E+04	0.00E+00	0.00E+00	0.00E+00	5.91E+04	2.69E+01	3.11E+02
47	$H_2O(b)$	0.00E+00	0.00E+00	0.00E+00	0.00E+00	0.00E+00	0.00E+00	0.00E+00	0.00E+00	0.00E+00
48	H^+	2.26E-15	1.90E-17	1.60E-13	0.00E+00	0.00E+00	0.00E+00	1.60E-13	7.27E-17	8.41E-16
49	HCL	0.00E+00	0.00E+00	0.00E+00	0.00E+00	0.00E+00	0.00E+00	0.00E+00	0.00E+00	0.00E+00
50	HCO3-	3.24E-24	1.65E-24	1.39E-20	3.26E-15	0.00E+00	0.00E+00	3.26E-15	1.48E-18	1.71E-17
51	H2CO3	2.05E-23	1.06E-23	8.93E-20	0.00E+00	0.00E+00	0.00E+00	8.93E-20	4.06E-23	4.70E-22
52	HF	0.00E+00	0.00E+00	0.00E+00	0.00E+00	0.00E+00	0.00E+00	0.00E+00	0.00E+00	0.00E+00
53	Hg^{+2}	1.05E-04	1.76E-04	1.48E+00	3.99E+00	0.00E+00	0.00E+00	5.47E+00	2.48E-03	2.88E-02
54	HNO_3	0.00E+00	0.00E+00	0.00E+00	0.00E+00	0.00E+00	0.00E+00	0.00E+00	0.00E+00	0.00E+00
55	K^+	2.58E-01	8.43E-02	7.10E+02	1.15E-03	0.00E+00	0.00E+00	7.10E+02	3.23E-01	3.73E+00
56	La^{+3}	2.78E-05	3.22E-05	2.72E-01	6.24E-03	0.00E+00	0.00E+00	2.78E-01	1.26E-04	1.46E-03
57	Li^+	1.18E-02	8.84E-04	5.76E+00	4.17E+00	0.00E+00	0.00E+00	9.93E+00	4.51E-03	5.22E-02
58	Mg^{+2}	8.27E-04	1.68E-04	1.41E+00	5.74E+00	0.00E+00	0.00E+00	7.15E+00	3.25E-03	3.76E-02
59	Mn^{+3}	8.97E-04	4.11E-04	3.46E+00	2.25E-01	0.00E+00	0.00E+00	3.69E+00	1.68E-03	1.94E-02
60	MnO_4^-	0.00E+00	0.00E+00	0.00E+00	0.00E+00	0.00E+00	0.00E+00	0.00E+00	0.00E+00	0.00E+00
61	N_2	1.78E-23	4.16E-24	3.50E-20	0.00E+00	0.00E+00	0.00E+00	3.50E-20	1.59E-23	1.84E-22
62	Na^+	7.95E+00	1.53E+00	1.28E+04	9.07E-02	0.00E+00	0.00E+00	1.28E+04	5.84E+00	6.76E+01
63	NH3	9.36E-04	1.33E-04	1.12E+00	0.00E+00	0.00E+00	0.00E+00	1.12E+00	5.09E-04	5.90E-03
64	NH4+	1.35E-22	1.33E-04	1.71E-19	1.44E-16	0.00E+00	0.00E+00	1.44E-16	6.55E-20	7.58E-19
65	Ni^{+2}	1.45E-03	7.11E-04	5.99E+00	2.00E-01	0.00E+00	0.00E+00	6.19E+00	2.81E-03	3.25E-02
66	NO	0.00E+00	0.00E+00	0.00E+00	0.00E+00	0.00E+00	0.00E+00	0.00E+00	0.00E+00	0.00E+00
67	NO_2	0.00E+00	0.00E+00	0.00E+00	0.00E+00	0.00E+00	0.00E+00	0.00E+00	0.00E+00	0.00E+00
68	NO_2^-	1.56E+00	6.00E-01	5.06E+03	2.27E-02	0.00E+00	0.00E+00	5.06E+03	2.30E+00	2.66E+01
69	NO_3^-	2.86E+00	1.48E+00	1.24E+04	1.75E-02	0.00E+00	0.00E+00	1.24E+04	5.66E+00	6.55E+01
70	O_2	9.42E-26	2.52E-26	2.12E-22	0.00E+00	0.00E+00	0.00E+00	2.12E-22	9.63E-26	1.12E-24
71	$O^=$	0.00E+00	0.00E+00	0.00E+00	3.27E+02	0.00E+00	0.00E+00	3.27E+02	1.49E-01	1.72E+00
72	OH^-	4.43E+00	6.29E-01	5.30E+03	2.07E-01	0.00E+00	0.00E+00	5.30E+03	2.41E+00	2.79E+01
73	$OH(b)^-$	7.82E-09	1.11E-09	9.35E-06	0.00E+00	0.00E+00	0.00E+00	9.35E-06	4.25E-09	4.92E-08

CALCULATION SHEET

BY: E. Berrios
DATE: 12/22/05

PROJECT: WTP
JOB NO.: 24590
CALC NO.: 24590-WTP-M4C-FRP-00003
SHEET REV: D
SHEET NO.: C-21

SUBJECT: Integrated Baseline Emissions Report Non-SSFM Represented Constituents Emissions Rate Estimation

	A	B	C	D	E	F	G	H	I	J
74	Pb^{+2}	3.68E-04	6.37E-04	5.36E+00	6.90E-02	0.00E+00	0.00E+00	5.43E+00	2.47E-03	2.86E-02
75	Pd^{+2}	2.85E-05	2.53E-05	2.13E-01	1.20E-03	0.00E+00	0.00E+00	2.14E-01	9.75E-05	1.13E-03
76	PO_4^{-3}	2.94E-02	2.33E-02	1.96E+02	5.48E+00	0.00E+00	0.00E+00	2.02E+02	9.16E-02	1.06E+00
77	Resin	0.00E+00	0.00E+00	0.00E+00	0.00E+00	0.00E+00	0.00E+00	0.00E+00	0.00E+00	0.00E+00
78	Rh^{+3}	2.76E-05	2.37E-05	1.99E-01	3.87E-03	0.00E+00	0.00E+00	2.03E-01	9.24E-05	1.07E-03
79	Ru^{+3}	4.10E-05	3.46E-05	2.91E-01	9.17E-02	0.00E+00	0.00E+00	3.83E-01	1.74E-04	2.01E-03
80	S^{+6}	0.00E+00	0.00E+00	0.00E+00	1.04E-15	0.00E+00	0.00E+00	1.04E-15	4.73E-19	5.48E-18
81	SiO2	5.55E-03	2.78E-03	2.34E+01	1.70E+02	0.00E+00	0.00E+00	1.93E+02	8.77E-02	1.02E+00
82	SiO_4^{-4}	4.24E-15	3.26E-15	2.74E-11	0.00E+00	0.00E+00	0.00E+00	2.74E-11	1.25E-14	1.44E-13
83	SO_2	0.00E+00	0.00E+00	0.00E+00	0.00E+00	0.00E+00	0.00E+00	0.00E+00	0.00E+00	0.00E+00
84	SO_4^{-2}	7.01E-02	5.62E-02	4.74E+02	5.15E-03	0.00E+00	0.00E+00	4.74E+02	2.15E-01	2.49E+00
85	Sr^{+2}	1.49E-05	1.09E-05	9.19E-02	6.79E-04	0.00E+00	0.00E+00	9.26E-02	4.21E-05	4.87E-04
86	Sucrose	0.00E+00	0.00E+00	0.00E+00	0.00E+00	0.00E+00	0.00E+00	0.00E+00	0.00E+00	0.00E+00
87	Ti^{+4}	4.57E-05	1.83E-05	1.54E-01	5.22E-01	0.00E+00	0.00E+00	6.76E-01	3.07E-04	3.56E-03
88	Zn^{+2}	1.71E-04	9.33E-05	7.86E-01	2.69E+01	0.00E+00	0.00E+00	2.77E+01	1.26E-02	1.46E-01
89	Zr^{+4}	1.26E-04	9.61E-05	8.09E-01	8.28E+00	0.00E+00	0.00E+00	9.09E+00	4.13E-03	4.78E-02
90										
91	Components	Aqueous Comp			Solid Comp	Gaseous		Total Comp		
92	Unit	mol/L	Lb/gal	Lb/day	Lb/day	mol/L	Lb/day	Lb/day	Mt/day	g/sec
93	Total	2.65E-02	1.95E-02	1.64E+02	9.04E+02	0.00E+00	0.00E+00	1.07E+03	4.85E-01	5.62E+00
94	$C_2O_4^{-2}$	2.85E-02	1.95E-02	1.64E+02	9.04E+02	0.00E+00	0.00E+00	1.07E+03	4.85E-01	5.62E+00
95	Formate	1.67E-14	6.26E-15	5.27E-11	0.00E+00	0.00E+00	0.00E+00	5.27E-11	2.40E-14	2.77E-13
96	Acetate	1.29E-14	6.36E-15	5.36E-11	0.00E+00	0.00E+00	0.00E+00	5.36E-11	2.44E-14	2.82E-13
97	Glycolate	8.59E-14	5.38E-14	4.53E-10	0.00E+00	0.00E+00	0.00E+00	4.53E-10	2.06E-13	2.38E-12
98	IDA	4.56E-14	5.06E-14	4.26E-10	0.00E+00	0.00E+00	0.00E+00	4.26E-10	1.94E-13	2.24E-12
99	Citrate	4.16E-15	6.68E-15	5.62E-11	0.00E+00	0.00E+00	0.00E+00	5.62E-11	2.56E-14	2.96E-13
100	HEDTA	1.95E-14	4.53E-14	3.82E-10	0.00E+00	0.00E+00	0.00E+00	3.82E-10	1.73E-13	2.01E-12
101	EDTA	2.34E-15	5.72E-15	4.81E-11	0.00E+00	0.00E+00	0.00E+00	4.81E-11	2.19E-14	2.53E-13
102										
103	Rad. Comp	Aqueous Rad. Comp			Solids Rad. Comp (1)			Total Rad. Comp (1)		
104	Unit	Ci/L	Ci/day	Lb/day	Ci/L	Ci/day	Lb/day	Ci/L	Ci/day	Lb/day
105	Total	1.94E-01	6.19E+03	6.73E+01	2.29E-03	7.31E+01	3.34E+00	1.96E-01	6.26E+03	7.06E+01
106	^{241}Am	5.59E-04	1.78E+01	1.15E-02	1.02E-05	3.25E-01	2.09E-04	5.69E-04	1.81E+01	1.17E-02
107	^{243}Am	3.65E-07	1.16E-02	1.29E-04	4.87E-09	1.55E-04	1.71E-06	3.70E-07	1.18E-02	1.30E-04
108	^{14}C	1.14E-05	3.64E-01	1.80E-04	2.18E-10	6.96E-06	3.43E-09	1.14E-05	3.64E-01	1.80E-04
109	^{60}Co	7.49E-05	2.39E+00	4.65E-06	7.13E-07	2.27E-02	4.43E-08	7.56E-05	2.41E+00	4.70E-06
110	^{243}Cm	6.02E-08	1.92E-03	8.38E-08	4.64E-09	1.48E-04	6.45E-09	6.49E-08	2.07E-03	9.02E-08
111	^{244}Cm	1.43E-06	4.55E-02	1.24E-06	1.06E-07	3.37E-03	9.19E-08	1.53E-06	4.88E-02	1.33E-06
112	^{137}Cs	1.21E-04	3.85E+00	9.78E-05	2.53E-04	8.08E+00	2.05E-04	3.74E-04	1.19E+01	3.03E-04
113	^{152}Eu	4.21E-06	1.34E-01	1.70E-06	3.76E-08	1.20E-03	1.52E-08	4.24E-06	1.35E-01	1.72E-06
114	^{154}Eu	8.72E-04	2.78E+01	2.27E-04	6.16E-06	1.96E-01	1.60E-06	8.78E-04	2.80E+01	2.28E-04
115	^{155}Eu	2.52E-04	8.04E+00	3.65E-05	1.53E-06	4.88E-02	2.21E-07	2.54E-04	8.09E+00	3.67E-05
116	^{3}H	8.29E-06	2.64E-01	6.07E-06	3.99E-06	1.27E-01	2.92E-06	1.23E-05	3.92E-01	8.99E-06
117	^{129}I	3.47E-07	1.11E-02	1.38E-01	6.19E-08	1.97E-03	2.46E-02	4.09E-07	1.30E-02	1.63E-01
118	^{63}Ni	1.35E-03	4.31E+01	1.67E-03	1.52E-05	4.85E-01	1.88E-05	1.37E-03	4.35E+01	1.69E-03
119	^{237}Np	4.42E-07	1.41E-02	4.41E-02	4.75E-09	1.52E-04	4.74E-04	4.47E-07	1.42E-02	4.46E-02
120	^{238}Pu	2.50E-06	7.98E-02	1.03E-05	2.48E-08	7.85E-04	1.01E-07	2.53E-06	8.06E-02	1.04E-05
121	^{239}Pu	3.46E-05	1.10E+00	3.92E-02	2.80E-07	8.94E-03	3.18E-04	3.49E-05	1.11E+00	3.95E-02
122	^{240}Pu	8.97E-06	2.86E-01	2.78E-03	7.32E-08	2.33E-03	2.27E-05	9.04E-06	2.88E-01	2.80E-03
123	^{241}Pu	1.88E-04	6.00E+00	1.28E-04	1.70E-06	5.42E-02	1.16E-06	1.90E-04	6.05E+00	1.30E-04
124	^{242}Pu	9.49E-10	3.03E-05	1.69E-05	7.36E-12	2.35E-07	1.31E-07	9.57E-10	3.05E-05	1.71E-05
125	^{125}Sb	5.20E-04	1.66E+01	3.52E-05	7.54E-06	2.40E-01	5.11E-07	5.28E-04	1.68E+01	3.57E-05
126	^{151}Sm	7.31E-03	2.33E+02	1.95E-02	1.86E-05	5.92E-01	4.96E-05	7.32E-03	2.34E+02	1.96E-02
127	^{126}Sn	8.27E-06	2.64E-01	5.12E-02	4.66E-08	1.49E-03	2.88E-04	8.32E-06	2.65E-01	5.15E-02
128	^{90}Sr	1.81E-01	5.78E+03	9.22E-02	1.27E-03	4.05E+01	6.46E-04	1.83E-01	5.82E+03	9.29E-02
129	^{99}Tc	1.44E-03	4.58E+01	5.96E+00	7.02E-04	2.24E+01	2.91E+00	2.14E-03	6.82E+01	8.87E+00
130	^{232}Th	1.34E-06	4.28E-04	8.58E+00	1.51E-10	4.80E-06	9.61E-02	1.36E-06	4.33E-04	8.67E+00
131	^{235}U	4.48E-07	1.43E-02	3.27E-03	9.12E-09	2.91E-04	6.65E-05	4.57E-07	1.46E-02	3.33E-03
132	^{234}U	3.18E-07	1.01E-02	3.60E-03	1.95E-09	6.21E-05	2.21E-05	3.20E-07	1.02E-02	3.62E-03
133	^{235}U	1.25E-06	3.99E-04	4.07E-01	7.12E-11	2.27E-06	2.32E-03	1.26E-06	4.01E-04	4.10E-01
134	^{236}U	2.14E-06	6.84E-04	2.33E-02	1.19E-10	3.80E-06	1.30E-04	2.16E-06	6.87E-04	2.34E-02
135	^{238}U	2.48E-07	7.91E-03	5.19E+01	1.45E-09	4.61E-05	3.02E-01	2.50E-07	7.96E-03	5.22E+01
136	(1) All radionuclides in gaseous streams are assumed to exist as solid particulate.									

Table C-11 LFP01 Stream Report

Stream Number:		LFP01
Stream Name:		LAW blended glass formers
Configuration:		MRQ-05-0049.acmf
Run Date / Time:		12/14/2005 - 1:42:25 PM
Run Data File:		H:\ACM v3.1\MRQ-05-0049\MRQ_05_0049A_Streams.csv

Variable	Value	Units	
Density	9.97E-01	g/cm^3	(does not include solid phase)
Enthalpy	-9.70E+05	BTU/hr	
Mass Flow	4.88E+03	Lb/hr	
	1.17E+05	Lb/day	
Volumetric Flow	2.85E-01	GPM	(does not include solid phase)
	3.80E-02	ft^3/min	(does not include solid phase)
Molar Flow	7.89E+00	Lbmol/hr	
Molecular Weight	1.80E+01	Lb/Lbmol	
Pressure	1.00E+03	mbar	
Temperature	2.50E+01	C	
Na Molarity	0.00E+00	mol/L	
pH	7.00E+00	pH	
Total TRU	0.00E+00	Ci/L	
Total Activity	6.45E-08	Ci/L	

Component	Aqueous Comp			Solid Comp	Gaseous (1)		Total Comp		
Unit	mol/L	Lb/gal	Lb/day	Lb/day	mol/L	Lb/day	Lb/day	mt/day	g/sec
Total	5.54E+01	8.32E+00	3.41E+03	1.14E+05	0.00E+00	0.00E+00	1.17E+05	5.32E+01	6.16E+02
Ag^+	0.00E+00	0.00E+00	0.00E+00	0.00E+00	0.00E+00	0.00E+00	0.00E+00	0.00E+00	0.00E+00
Al^{+3}	0.00E+00	0.00E+00	0.00E+00	2.23E+03	0.00E+00	0.00E+00	2.23E+03	1.01E+00	1.17E+01
As^{+3}	0.00E+00	0.00E+00	0.00E+00	0.00E+00	0.00E+00	0.00E+00	0.00E+00	0.00E+00	0.00E+00
B^{+3}	0.00E+00	0.00E+00	0.00E+00	3.28E+03	0.00E+00	0.00E+00	3.28E+03	1.49E+00	1.72E+01
Ba^{+2}	0.00E+00	0.00E+00	0.00E+00	0.00E+00	0.00E+00	0.00E+00	0.00E+00	0.00E+00	0.00E+00
Bi^{+3}	0.00E+00	0.00E+00	0.00E+00	0.00E+00	0.00E+00	0.00E+00	0.00E+00	0.00E+00	0.00E+00
Ca^{+2}	0.00E+00	0.00E+00	0.00E+00	3.17E+03	0.00E+00	0.00E+00	3.17E+03	1.44E+00	1.67E+01
Cd^{+2}	0.00E+00	0.00E+00	0.00E+00	1.48E-01	0.00E+00	0.00E+00	1.46E-01	6.63E-05	7.67E-04
Ce^{+3}	0.00E+00	0.00E+00	0.00E+00	0.00E+00	0.00E+00	0.00E+00	0.00E+00	0.00E+00	0.00E+00
Cl^-	0.00E+00	0.00E+00	0.00E+00	7.96E-01	0.00E+00	0.00E+00	7.96E-01	3.62E-04	4.19E-03
CO	0.00E+00	0.00E+00	0.00E+00	0.00E+00	0.00E+00	0.00E+00	0.00E+00	0.00E+00	0.00E+00
CO_2	0.00E+00	0.00E+00	0.00E+00	0.00E+00	0.00E+00	0.00E+00	0.00E+00	0.00E+00	0.00E+00
CO_3^{-2}	0.00E+00	0.00E+00	0.00E+00	3.87E+03	0.00E+00	0.00E+00	3.87E+03	1.76E+00	2.03E+01
Cr^{+3}	0.00E+00	0.00E+00	0.00E+00	5.35E+00	0.00E+00	0.00E+00	5.35E+00	2.43E-03	2.82E-02
Cu^{+2}	0.00E+00	0.00E+00	0.00E+00	0.00E+00	0.00E+00	0.00E+00	0.00E+00	0.00E+00	0.00E+00
F^-	0.00E+00	0.00E+00	0.00E+00	0.00E+00	0.00E+00	0.00E+00	0.00E+00	0.00E+00	0.00E+00
Fe^{+3}	0.00E+00	0.00E+00	0.00E+00	4.52E+03	0.00E+00	0.00E+00	4.52E+03	2.06E+00	2.38E+01
H_2O	5.54E+01	8.32E+00	3.41E+03	0.00E+00	0.00E+00	0.00E+00	3.41E+03	1.55E+00	1.79E+01
$H_2O(b)$	0.00E+00	0.00E+00	0.00E+00	0.00E+00	0.00E+00	0.00E+00	0.00E+00	0.00E+00	0.00E+00
H^+	1.00E-07	8.41E-10	3.45E-07	0.00E+00	0.00E+00	0.00E+00	3.45E-07	1.57E-10	1.81E-09
HCL	0.00E+00	0.00E+00	0.00E+00	0.00E+00	0.00E+00	0.00E+00	0.00E+00	0.00E+00	0.00E+00
HCO3-	0.00E+00	0.00E+00	0.00E+00	0.00E+00	0.00E+00	0.00E+00	0.00E+00	0.00E+00	0.00E+00
H2CO3	0.00E+00	0.00E+00	0.00E+00	0.00E+00	0.00E+00	0.00E+00	0.00E+00	0.00E+00	0.00E+00
HF	0.00E+00	0.00E+00	0.00E+00	0.00E+00	0.00E+00	0.00E+00	0.00E+00	0.00E+00	0.00E+00
Hg^{+2}	0.00E+00	0.00E+00	0.00E+00	0.00E+00	0.00E+00	0.00E+00	0.00E+00	0.00E+00	0.00E+00
HNO_3	0.00E+00	0.00E+00	0.00E+00	0.00E+00	0.00E+00	0.00E+00	0.00E+00	0.00E+00	0.00E+00
K^+	0.00E+00	0.00E+00	0.00E+00	1.00E+01	0.00E+00	0.00E+00	1.00E+01	4.56E-03	5.28E-02
La^{+3}	0.00E+00	0.00E+00	0.00E+00	0.00E+00	0.00E+00	0.00E+00	0.00E+00	0.00E+00	0.00E+00
Li^+	0.00E+00	0.00E+00	0.00E+00	8.88E+02	0.00E+00	0.00E+00	8.88E+02	4.04E-01	4.67E+00
Mg^{+2}	0.00E+00	0.00E+00	0.00E+00	1.17E+03	0.00E+00	0.00E+00	1.17E+03	5.34E-01	6.18E+00
Mn^{+3}	0.00E+00	0.00E+00	0.00E+00	1.28E+01	0.00E+00	0.00E+00	1.28E+01	5.84E-03	6.75E-02
MnO_4^-	0.00E+00	0.00E+00	0.00E+00	0.00E+00	0.00E+00	0.00E+00	0.00E+00	0.00E+00	0.00E+00
N_2	0.00E+00	0.00E+00	0.00E+00	0.00E+00	0.00E+00	0.00E+00	0.00E+00	0.00E+00	0.00E+00
Na^+	0.00E+00	0.00E+00	0.00E+00	3.79E+00	0.00E+00	0.00E+00	3.79E+00	1.72E-03	1.99E-02
NH3	0.00E+00	0.00E+00	0.00E+00	0.00E+00	0.00E+00	0.00E+00	0.00E+00	0.00E+00	0.00E+00
NH4+	0.00E+00	0.00E+00	0.00E+00	0.00E+00	0.00E+00	0.00E+00	0.00E+00	0.00E+00	0.00E+00
Ni^{+2}	0.00E+00	0.00E+00	0.00E+00	1.16E+01	0.00E+00	0.00E+00	1.16E+01	5.29E-03	6.12E-02
NO	0.00E+00	0.00E+00	0.00E+00	0.00E+00	0.00E+00	0.00E+00	0.00E+00	0.00E+00	0.00E+00
NO_2	0.00E+00	0.00E+00	0.00E+00	0.00E+00	0.00E+00	0.00E+00	0.00E+00	0.00E+00	0.00E+00
NO_2^-	0.00E+00	0.00E+00	0.00E+00	0.00E+00	0.00E+00	0.00E+00	0.00E+00	0.00E+00	0.00E+00
NO_3^-	0.00E+00	0.00E+00	0.00E+00	0.00E+00	0.00E+00	0.00E+00	0.00E+00	0.00E+00	0.00E+00
O_2	0.00E+00	0.00E+00	0.00E+00	0.00E+00	0.00E+00	0.00E+00	0.00E+00	0.00E+00	0.00E+00
O^{--}	0.00E+00	0.00E+00	0.00E+00	1.54E+04	0.00E+00	0.00E+00	1.54E+04	7.01E+00	8.11E+01
OH^-	1.00E-07	1.42E-08	5.82E-06	1.55E+04	0.00E+00	0.00E+00	1.55E+04	7.03E+00	8.14E+01
$OH(b)^-$	0.00E+00	0.00E+00	0.00E+00	0.00E+00	0.00E+00	0.00E+00	0.00E+00	0.00E+00	0.00E+00

CALCULATION SHEET

BY: E. Berrios
DATE: 12/22/05

PROJECT: WTP
JOB NO.: 24590
CALC NO.: 24590-WTP-M4C-FRP-00003
SHEET REV: D
SHEET NO.: C-23

SUBJECT: Integrated Baseline Emissions Report Non-SSFM Represented Constituents Emissions Rate Estimation

	A	B	C	D	E	F	G	H	I	J
74	Pb^{+2}	0.00E+00	0.00E+00	0.00E+00	3.09E-02	0.00E+00	0.00E+00	3.09E-02	1.41E-05	1.63E-04
75	Pd^{+2}	0.00E+00	0.00E+00	0.00E+00	0.00E+00	0.00E+00	0.00E+00	0.00E+00	0.00E+00	0.00E+00
76	PO_4^{-3}	0.00E+00	0.00E+00	0.00E+00	2.31E+01	0.00E+00	0.00E+00	2.31E+01	1.05E-02	1.22E-01
77	Resin	0.00E+00	0.00E+00	0.00E+00	0.00E+00	0.00E+00	0.00E+00	0.00E+00	0.00E+00	0.00E+00
78	Rh^{+3}	0.00E+00	0.00E+00	0.00E+00	0.00E+00	0.00E+00	0.00E+00	0.00E+00	0.00E+00	0.00E+00
79	Ru^{+3}	0.00E+00	0.00E+00	0.00E+00	0.00E+00	0.00E+00	0.00E+00	0.00E+00	0.00E+00	0.00E+00
80	S^{+6}	0.00E+00	0.00E+00	0.00E+00	0.00E+00	0.00E+00	0.00E+00	0.00E+00	0.00E+00	0.00E+00
81	SiO2	0.00E+00	0.00E+00	0.00E+00	5.09E+04	0.00E+00	0.00E+00	5.09E+04	2.31E+01	2.68E+02
82	SiO_4^{-4}	0.00E+00	0.00E+00	0.00E+00	0.00E+00	0.00E+00	0.00E+00	0.00E+00	0.00E+00	0.00E+00
83	SO_2	0.00E+00	0.00E+00	0.00E+00	0.00E+00	0.00E+00	0.00E+00	0.00E+00	0.00E+00	0.00E+00
84	SO_4^{-2}	0.00E+00	0.00E+00	0.00E+00	1.33E+01	0.00E+00	0.00E+00	1.33E+01	6.03E-03	6.98E-02
85	Sr^{+2}	0.00E+00	0.00E+00	0.00E+00	0.00E+00	0.00E+00	0.00E+00	0.00E+00	0.00E+00	0.00E+00
86	Sucrose	0.00E+00	0.00E+00	0.00E+00	6.60E+03	0.00E+00	0.00E+00	6.60E+03	3.00E+00	3.47E+01
87	Ti^{+4}	0.00E+00	0.00E+00	0.00E+00	9.67E+02	0.00E+00	0.00E+00	9.67E+02	4.39E-01	5.08E+00
88	Zn^{+2}	0.00E+00	0.00E+00	0.00E+00	2.68E+03	0.00E+00	0.00E+00	2.68E+03	1.22E+00	1.41E+01
89	Zr^{+4}	0.00E+00	0.00E+00	0.00E+00	2.49E+03	0.00E+00	0.00E+00	2.49E+03	1.13E+00	1.31E+01
90										
91	Components	Aqueous Comp			Solid Comp	Gaseous		Total Comp		
92	Unit	mol/L	Lb/gal	Lb/day	Lb/day	mol/L	Lb/day	Lb/day	Mt/day	g/sec
93	Total	0.00E+00	0.00E+00	0.00E+00	0.00E+00	0.00E+00	0.00E+00	0.00E+00	0.00E+00	0.00E+00
94	$C_2O_4^{-2}$	0.00E+00	0.00E+00	0.00E+00	0.00E+00	0.00E+00	0.00E+00	0.00E+00	0.00E+00	0.00E+00
95	Formate	0.00E+00	0.00E+00	0.00E+00	0.00E+00	0.00E+00	0.00E+00	0.00E+00	0.00E+00	0.00E+00
96	Acetate	0.00E+00	0.00E+00	0.00E+00	0.00E+00	0.00E+00	0.00E+00	0.00E+00	0.00E+00	0.00E+00
97	Glycolate	0.00E+00	0.00E+00	0.00E+00	0.00E+00	0.00E+00	0.00E+00	0.00E+00	0.00E+00	0.00E+00
98	IDA	0.00E+00	0.00E+00	0.00E+00	0.00E+00	0.00E+00	0.00E+00	0.00E+00	0.00E+00	0.00E+00
99	Citrate	0.00E+00	0.00E+00	0.00E+00	0.00E+00	0.00E+00	0.00E+00	0.00E+00	0.00E+00	0.00E+00
100	HEDTA	0.00E+00	0.00E+00	0.00E+00	0.00E+00	0.00E+00	0.00E+00	0.00E+00	0.00E+00	0.00E+00
101	EDTA	0.00E+00	0.00E+00	0.00E+00	0.00E+00	0.00E+00	0.00E+00	0.00E+00	0.00E+00	0.00E+00
102										
103	Rad. Comp	Aqueous Rad. Comp			Solids Rad. Comp (1)			Total Rad. Comp (1)		
104	Unit	Ci/L	Ci/day	Lb/day	Ci/L	Ci/day	Lb/day	Ci/L	Ci/day	Lb/day
105	Total	0.00E+00	0.00E+00	0.00E+00	6.45E-08	1.00E-04	2.00E+00	6.45E-08	1.00E-04	2.00E+00
106	^{241}Am	0.00E+00	0.00E+00	0.00E+00	0.00E+00	0.00E+00	0.00E+00	0.00E+00	0.00E+00	0.00E+00
107	^{243}Am	0.00E+00	0.00E+00	0.00E+00	0.00E+00	0.00E+00	0.00E+00	0.00E+00	0.00E+00	0.00E+00
108	^{14}C	0.00E+00	0.00E+00	0.00E+00	0.00E+00	0.00E+00	0.00E+00	0.00E+00	0.00E+00	0.00E+00
109	^{60}Co	0.00E+00	0.00E+00	0.00E+00	0.00E+00	0.00E+00	0.00E+00	0.00E+00	0.00E+00	0.00E+00
110	^{243}Cm	0.00E+00	0.00E+00	0.00E+00	0.00E+00	0.00E+00	0.00E+00	0.00E+00	0.00E+00	0.00E+00
111	^{244}Cm	0.00E+00	0.00E+00	0.00E+00	0.00E+00	0.00E+00	0.00E+00	0.00E+00	0.00E+00	0.00E+00
112	^{137}Cs	0.00E+00	0.00E+00	0.00E+00	0.00E+00	0.00E+00	0.00E+00	0.00E+00	0.00E+00	0.00E+00
113	^{152}Eu	0.00E+00	0.00E+00	0.00E+00	0.00E+00	0.00E+00	0.00E+00	0.00E+00	0.00E+00	0.00E+00
114	^{154}Eu	0.00E+00	0.00E+00	0.00E+00	0.00E+00	0.00E+00	0.00E+00	0.00E+00	0.00E+00	0.00E+00
115	^{155}Eu	0.00E+00	0.00E+00	0.00E+00	0.00E+00	0.00E+00	0.00E+00	0.00E+00	0.00E+00	0.00E+00
116	^{3}H	0.00E+00	0.00E+00	0.00E+00	0.00E+00	0.00E+00	0.00E+00	0.00E+00	0.00E+00	0.00E+00
117	^{129}I	0.00E+00	0.00E+00	0.00E+00	0.00E+00	0.00E+00	0.00E+00	0.00E+00	0.00E+00	0.00E+00
118	^{63}Ni	0.00E+00	0.00E+00	0.00E+00	0.00E+00	0.00E+00	0.00E+00	0.00E+00	0.00E+00	0.00E+00
119	^{237}Np	0.00E+00	0.00E+00	0.00E+00	0.00E+00	0.00E+00	0.00E+00	0.00E+00	0.00E+00	0.00E+00
120	^{238}Pu	0.00E+00	0.00E+00	0.00E+00	0.00E+00	0.00E+00	0.00E+00	0.00E+00	0.00E+00	0.00E+00
121	^{239}Pu	0.00E+00	0.00E+00	0.00E+00	0.00E+00	0.00E+00	0.00E+00	0.00E+00	0.00E+00	0.00E+00
122	^{240}Pu	0.00E+00	0.00E+00	0.00E+00	0.00E+00	0.00E+00	0.00E+00	0.00E+00	0.00E+00	0.00E+00
123	^{241}Pu	0.00E+00	0.00E+00	0.00E+00	0.00E+00	0.00E+00	0.00E+00	0.00E+00	0.00E+00	0.00E+00
124	^{242}Pu	0.00E+00	0.00E+00	0.00E+00	0.00E+00	0.00E+00	0.00E+00	0.00E+00	0.00E+00	0.00E+00
125	^{125}Sb	0.00E+00	0.00E+00	0.00E+00	0.00E+00	0.00E+00	0.00E+00	0.00E+00	0.00E+00	0.00E+00
126	^{151}Sm	0.00E+00	0.00E+00	0.00E+00	0.00E+00	0.00E+00	0.00E+00	0.00E+00	0.00E+00	0.00E+00
127	^{126}Sn	0.00E+00	0.00E+00	0.00E+00	0.00E+00	0.00E+00	0.00E+00	0.00E+00	0.00E+00	0.00E+00
128	^{90}Sr	0.00E+00	0.00E+00	0.00E+00	0.00E+00	0.00E+00	0.00E+00	0.00E+00	0.00E+00	0.00E+00
129	^{99}Tc	0.00E+00	0.00E+00	0.00E+00	0.00E+00	0.00E+00	0.00E+00	0.00E+00	0.00E+00	0.00E+00
130	^{232}Th	0.00E+00	0.00E+00	0.00E+00	6.45E-08	1.00E-04	2.00E+00	6.45E-08	1.00E-04	2.00E+00
131	^{235}U	0.00E+00	0.00E+00	0.00E+00	0.00E+00	0.00E+00	0.00E+00	0.00E+00	0.00E+00	0.00E+00
132	^{234}U	0.00E+00	0.00E+00	0.00E+00	0.00E+00	0.00E+00	0.00E+00	0.00E+00	0.00E+00	0.00E+00
133	^{236}U	0.00E+00	0.00E+00	0.00E+00	0.00E+00	0.00E+00	0.00E+00	0.00E+00	0.00E+00	0.00E+00
134	^{238}U	0.00E+00	0.00E+00	0.00E+00	0.00E+00	0.00E+00	0.00E+00	0.00E+00	0.00E+00	0.00E+00
135	^{238}U	0.00E+00	0.00E+00	0.00E+00	0.00E+00	0.00E+00	0.00E+00	0.00E+00	0.00E+00	0.00E+00
136	(1) All radionuclides in gaseous streams are assumed to exist as solid particulate.									

Table C-12 LFP04 Stream Report

3	Stream Number:	LFP04
4	Stream Name:	Blended LAW melter feed to melter
5	Configuration:	MRQ-05-0049.acmf
6	Run Date / Time:	12/14/2005 - 1:42:25 PM
7	Run Data File:	H:\ACM v3.1\MRQ-05-0049\MRQ_05_0049A_Streams.csv

	Variable	Value	Units	
10	Density	1.21E+00	g/cm^3	(does not include solid phase)
11	Enthalpy	-3.75E+07	BTU/hr	
12	Mass Flow	1.03E+04	Lb/hr	
13		2.46E+05	Lb/day	
14	Volumetric Flow	1.03E+01	GPM	(does not include solid phase)
15		1.37E+00	ft^3/min	(does not include solid phase)
16	Molar Flow	3.11E+02	Lbmol/hr	
17	Molecular Weight	2.00E+01	Lb/Lbmol	
18	Pressure	1.00E+03	mbar	
19	Temperature	3.00E+01	C	
20	Na Molarity	4.53E+00	mol/L	
21	pH	1.28E+01	pH	
22	Total TRU	4.60E-04	Ci/L	
23	Total Activity	1.12E-01	Ci/L	

	Component	Aqueous Comp			Solid Comp	Gaseous (1)		Total Comp		
27	Unit	mol/L	Lb/gal	Lb/day	Lb/day	mol/L	Lb/day	Lb/day	mt/day	g/sec
28	Total	6.05E+01	1.01E+01	1.49E+05	9.57E+04	0.00E+00	0.00E+00	2.45E+05	1.11E+02	1.29E+03
29	Ag^+	3.38E-05	3.04E-05	4.50E-01	1.57E-02	0.00E+00	0.00E+00	4.66E-01	2.12E-04	2.45E-03
30	Al^{+3}	4.10E-01	9.22E-02	1.36E+03	2.27E+03	0.00E+00	0.00E+00	3.63E+03	1.65E+00	1.91E+01
31	As^{+3}	1.49E-04	9.31E-05	1.38E+00	2.72E-01	0.00E+00	0.00E+00	1.65E+00	7.50E-04	8.68E-03
32	B^{+3}	2.46E+00	2.22E-01	3.28E+03	1.12E+02	0.00E+00	0.00E+00	3.39E+03	1.54E+00	1.79E+01
33	Ba^{+2}	3.11E-05	3.56E-05	5.27E-01	5.68E-03	0.00E+00	0.00E+00	5.32E-01	2.42E-04	2.80E-03
34	Bi^{+3}	3.67E-05	6.39E-05	9.46E-01	1.38E-02	0.00E+00	0.00E+00	9.60E-01	4.36E-04	5.05E-03
35	Ca^{+2}	4.62E-03	1.55E-03	2.29E+01	3.20E+03	0.00E+00	0.00E+00	3.23E+03	1.47E+00	1.70E+01
36	Cd^{+2}	5.78E-05	5.42E-05	8.02E-01	2.52E-01	0.00E+00	0.00E+00	1.05E+00	4.79E-04	5.54E-03
37	Ce^{+3}	1.38E-03	1.61E-03	2.39E+01	1.20E-01	0.00E+00	0.00E+00	2.40E+01	1.09E-02	1.26E-01
38	Cl^-	7.69E-02	2.28E-02	3.37E+02	7.97E-01	0.00E+00	0.00E+00	3.37E+02	1.53E-01	1.77E+00
39	CO	0.00E+00	0.00E+00	0.00E+00	0.00E+00	0.00E+00	0.00E+00	0.00E+00	0.00E+00	0.00E+00
40	CO_2	0.00E+00	0.00E+00	0.00E+00	0.00E+00	0.00E+00	0.00E+00	0.00E+00	0.00E+00	0.00E+00
41	CO_3^{-2}	3.29E-01	1.65E-01	2.44E+03	3.87E+03	0.00E+00	0.00E+00	6.31E+03	2.87E+00	3.32E+01
42	Cr^{+3}	9.91E-03	4.30E-03	6.36E+01	7.04E+00	0.00E+00	0.00E+00	7.07E+01	3.21E-02	3.72E-01
43	Cu^{+2}	5.71E-05	3.03E-05	4.48E-01	2.38E-03	0.00E+00	0.00E+00	4.50E-01	2.05E-04	2.37E-03
44	F^-	3.75E-02	5.95E-03	8.80E+01	8.16E-03	0.00E+00	0.00E+00	8.80E+01	4.00E-02	4.63E-01
45	Fe^{+3}	1.81E-03	8.42E-04	1.25E+01	4.54E+03	0.00E+00	0.00E+00	4.56E+03	2.07E+00	2.40E+01
46	H_2O	4.00E+01	8.01E+00	8.90E+04	0.00E+00	0.00E+00	0.00E+00	8.90E+04	4.04E+01	4.68E+02
47	$H_2O(b)$	0.00E+00	0.00E+00	0.00E+00	0.00E+00	0.00E+00	0.00E+00	0.00E+00	0.00E+00	0.00E+00
48	H^+	1.50E-13	1.26E-15	1.86E-11	0.00E+00	0.00E+00	0.00E+00	1.86E-11	8.46E-15	9.79E-14
49	HCL	0.00E+00	0.00E+00	0.00E+00	0.00E+00	0.00E+00	0.00E+00	0.00E+00	0.00E+00	0.00E+00
50	HCO3-	1.85E-24	9.40E-25	1.39E-20	3.26E-15	0.00E+00	0.00E+00	3.26E-15	1.48E-18	1.71E-17
51	H2CO3	1.17E-23	6.04E-24	8.93E-20	0.00E+00	0.00E+00	0.00E+00	8.93E-20	4.06E-23	4.70E-22
52	HF	0.00E+00	0.00E+00	0.00E+00	0.00E+00	0.00E+00	0.00E+00	0.00E+00	0.00E+00	0.00E+00
53	Hg^{+2}	5.98E-05	1.00E-04	1.48E+00	3.99E+00	0.00E+00	0.00E+00	5.47E+00	2.48E-03	2.88E-02
54	HNO_3	0.00E+00	0.00E+00	0.00E+00	0.00E+00	0.00E+00	0.00E+00	0.00E+00	0.00E+00	0.00E+00
55	K^+	1.47E-01	4.80E-02	7.10E+02	1.00E+01	0.00E+00	0.00E+00	7.20E+02	3.27E-01	3.79E+00
56	La^{+3}	1.58E-05	1.84E-05	2.72E-01	6.24E-03	0.00E+00	0.00E+00	2.78E-01	1.26E-04	1.46E-03
57	Li^+	6.73E-03	3.90E-04	5.76E+00	8.92E+02	0.00E+00	0.00E+00	8.98E+02	4.08E-01	4.72E+00
58	Mg^{+2}	4.71E-04	9.55E-05	1.41E+00	1.18E+03	0.00E+00	0.00E+00	1.18E+03	5.37E-01	6.22E+00
59	Mn^{+3}	5.11E-04	2.34E-04	3.46E+00	1.31E+01	0.00E+00	0.00E+00	1.65E+01	7.51E-03	8.69E-02
60	MnO_4^-	0.00E+00	0.00E+00	0.00E+00	0.00E+00	0.00E+00	0.00E+00	0.00E+00	0.00E+00	0.00E+00
61	N_2	1.01E-23	2.37E-24	3.50E-20	0.00E+00	0.00E+00	0.00E+00	3.50E-20	1.59E-23	1.84E-22
62	Na^+	4.53E+00	8.68E-01	1.28E+04	3.88E+00	0.00E+00	0.00E+00	1.28E+04	5.84E+00	6.76E+01
63	NH3	5.33E-04	7.58E-05	1.12E+00	0.00E+00	0.00E+00	0.00E+00	1.12E+00	5.09E-04	5.90E-03
64	NH4+	7.66E-23	7.58E-05	1.71E-19	1.44E-18	0.00E+00	0.00E+00	1.44E-18	6.55E-20	7.58E-19
65	Ni^{+2}	8.26E-04	4.05E-04	5.99E+00	1.18E+01	0.00E+00	0.00E+00	1.78E+01	8.10E-03	9.38E-02
66	NO	0.00E+00	0.00E+00	0.00E+00	0.00E+00	0.00E+00	0.00E+00	0.00E+00	0.00E+00	0.00E+00
67	NO_2	0.00E+00	0.00E+00	0.00E+00	0.00E+00	0.00E+00	0.00E+00	0.00E+00	0.00E+00	0.00E+00
68	NO_2^-	8.90E-01	3.42E-01	5.06E+03	2.27E-02	0.00E+00	0.00E+00	5.06E+03	2.30E+00	2.66E+01
69	NO_3^-	1.63E+00	8.41E-01	1.24E+04	1.75E-02	0.00E+00	0.00E+00	1.24E+04	5.66E+00	6.55E+01
70	O_2	5.37E-26	1.43E-26	2.12E-22	0.00E+00	0.00E+00	0.00E+00	2.12E-22	9.63E-26	1.12E-24
71	$O^=$	0.00E+00	0.00E+00	0.00E+00	1.57E+04	0.00E+00	0.00E+00	1.57E+04	7.16E+00	8.28E+01
72	OH^-	6.69E-02	9.49E-03	1.40E+02	0.00E+00	0.00E+00	0.00E+00	1.40E+02	6.38E-02	7.39E-01
73	$OH(b)^-$	9.82E+00	1.39E+00	2.06E+04	0.00E+00	0.00E+00	0.00E+00	2.06E+04	9.38E+00	1.09E+02

CALCULATION SHEET

BY: E. Berrios
DATE: 12/22/05

PROJECT: WTP
JOB NO.: 24590
CALC NO.: 24590-WTP-M4C-FRP-00003
SHEET REV: D
SHEET NO.: C-25

SUBJECT: Integrated Baseline Emissions Report Non-SSFM Represented Constituents Emissions Rate Estimation

	A	B	C	D	E	F	G	H	I	J
74	Pb^{+2}	2.10E-04	3.62E-04	5.36E+00	9.99E-02	0.00E+00	0.00E+00	5.46E+00	2.48E-03	2.87E-02
75	Pd^{+2}	1.82E-05	1.44E-05	2.13E-01	1.20E-03	0.00E+00	0.00E+00	2.14E-01	9.75E-05	1.13E-03
76	PO_4^{-3}	1.67E-02	1.33E-02	1.96E+02	2.86E+01	0.00E+00	0.00E+00	2.25E+02	1.02E-01	1.18E+00
77	Resin	0.00E+00	0.00E+00	0.00E+00	0.00E+00	0.00E+00	0.00E+00	0.00E+00	0.00E+00	0.00E+00
78	Rh^{+3}	1.57E-05	1.35E-05	1.99E-01	3.87E-03	0.00E+00	0.00E+00	2.03E-01	9.24E-05	1.07E-03
79	Ru^{+3}	2.33E-05	1.97E-05	2.91E-01	9.17E-02	0.00E+00	0.00E+00	3.83E-01	1.74E-04	2.01E-03
80	S^{+6}	0.00E+00	0.00E+00	0.00E+00	1.04E-15	0.00E+00	0.00E+00	1.04E-15	4.73E-19	5.48E-18
81	SiO2	3.16E-03	1.58E-03	2.34E+01	5.10E+04	0.00E+00	0.00E+00	5.11E+04	2.32E+01	2.69E+02
82	SiO_4^{-4}	2.41E-15	1.86E-15	2.74E-11	0.00E+00	0.00E+00	0.00E+00	2.74E-11	1.25E-14	1.44E-13
83	SO_2	0.00E+00	0.00E+00	0.00E+00	0.00E+00	0.00E+00	0.00E+00	0.00E+00	0.00E+00	0.00E+00
84	SO_4^{-2}	3.99E-02	3.20E-02	4.74E+02	1.33E+01	0.00E+00	0.00E+00	4.87E+02	2.21E-01	2.56E+00
85	Sr^{+2}	8.50E-06	6.21E-06	9.19E-02	6.79E-04	0.00E+00	0.00E+00	9.26E-02	4.21E-05	4.87E-04
86	Sucrose	0.00E+00	0.00E+00	0.00E+00	6.60E+03	0.00E+00	0.00E+00	6.60E+03	3.00E+00	3.47E+01
87	Ti^{+4}	2.60E-05	1.04E-05	1.54E-01	9.67E+02	0.00E+00	0.00E+00	9.67E+02	4.40E-01	5.09E+00
88	Zn^{+2}	9.74E-05	5.31E-05	7.86E-01	2.70E+03	0.00E+00	0.00E+00	2.70E+03	1.23E+00	1.42E+01
89	Zr^{+4}	7.18E-05	5.47E-05	8.09E-01	2.50E+03	0.00E+00	0.00E+00	2.50E+03	1.14E+00	1.31E+01
90										
91	Components	Aqueous Comp			Solid Comp	Gaseous		Total Comp		
92	Unit	mol/L	Lb/gal	Lb/day	Lb/day	mol/L	Lb/day	Lb/day	Mt/day	g/sec
93	Total	1.51E-02	1.11E-02	1.64E+02	9.04E+02	0.00E+00	0.00E+00	1.07E+03	4.85E-01	5.62E+00
94	$C_2O_4^{-2}$	1.51E-02	1.11E-02	1.64E+02	9.04E+02	0.00E+00	0.00E+00	1.07E+03	4.85E-01	5.62E+00
95	Formate	9.49E-15	3.56E-15	5.27E-11	0.00E+00	0.00E+00	0.00E+00	5.27E-11	2.40E-14	2.77E-13
96	Acetate	7.35E-15	3.62E-15	5.36E-11	0.00E+00	0.00E+00	0.00E+00	5.36E-11	2.44E-14	2.82E-13
97	Glycolate	4.89E-14	3.06E-14	4.53E-10	0.00E+00	0.00E+00	0.00E+00	4.53E-10	2.06E-13	2.38E-12
98	IDA	2.59E-14	2.88E-14	4.26E-10	0.00E+00	0.00E+00	0.00E+00	4.26E-10	1.94E-13	2.24E-12
99	Citrate	2.37E-15	3.80E-15	5.62E-11	0.00E+00	0.00E+00	0.00E+00	5.62E-11	2.56E-14	2.96E-13
100	HEDTA	1.11E-14	2.58E-14	3.82E-10	0.00E+00	0.00E+00	0.00E+00	3.82E-10	1.73E-13	2.01E-12
101	EDTA	1.33E-15	3.25E-15	4.81E-11	0.00E+00	0.00E+00	0.00E+00	4.81E-11	2.19E-14	2.53E-13
102										
103	Rad. Comp	Aqueous Rad. Comp			Solids Rad. Comp (1)			Total Rad. Comp (1)		
104	Unit	Ci/L	Ci/day	Lb/day	Ci/L	Ci/day	Lb/day	Ci/L	Ci/day	Lb/day
105	Total	1.10E-01	6.19E+03	6.73E+01	1.30E-03	7.31E+01	5.34E+00	1.12E-01	6.26E+03	7.26E+01
106	^{241}Am	3.18E-04	1.78E+01	1.15E-02	5.80E-06	3.25E-01	2.09E-04	3.24E-04	1.81E+01	1.17E-02
107	^{243}Am	2.08E-07	1.16E-02	1.29E-04	2.77E-09	1.55E-04	1.71E-06	2.11E-07	1.18E-02	1.30E-04
108	^{14}C	6.50E-06	3.64E-01	1.80E-04	1.24E-10	6.96E-06	3.43E-09	6.50E-06	3.64E-01	1.80E-04
109	^{60}Co	4.26E-05	2.39E+00	4.65E-06	4.06E-07	2.27E-02	4.43E-08	4.30E-05	2.41E+00	4.70E-06
110	^{243}Cm	3.43E-08	1.92E-03	8.38E-08	2.64E-09	1.48E-04	6.45E-09	3.69E-08	2.07E-03	9.02E-08
111	^{244}Cm	8.12E-07	4.55E-02	1.24E-06	6.02E-08	3.37E-03	9.19E-08	8.72E-07	4.88E-02	1.33E-06
112	^{137}Cs	6.88E-05	3.85E+00	9.78E-05	1.44E-04	8.08E+00	2.05E-04	2.13E-04	1.19E+01	3.03E-04
113	^{152}Eu	2.40E-06	1.34E-01	1.70E-06	2.14E-08	1.20E-03	1.52E-08	2.42E-06	1.35E-01	1.72E-06
114	^{154}Eu	4.96E-04	2.78E+01	2.27E-04	3.51E-06	1.96E-01	1.60E-06	5.00E-04	2.80E+01	2.28E-04
115	^{155}Eu	1.44E-04	8.04E+00	3.65E-05	8.71E-07	4.88E-02	2.21E-07	1.44E-04	8.09E+00	3.67E-05
116	^{3}H	4.72E-06	2.64E-01	6.07E-08	2.27E-08	1.27E-01	2.92E-08	6.99E-06	3.92E-01	8.99E-08
117	^{129}I	1.98E-07	1.11E-02	1.38E-01	3.52E-08	1.97E-03	2.46E-02	2.33E-07	1.30E-02	1.63E-01
118	^{63}Ni	7.69E-04	4.31E+01	1.67E-03	8.66E-06	4.85E-01	1.88E-05	7.78E-04	4.35E+01	1.69E-03
119	^{237}Np	2.52E-07	1.41E-02	4.41E-02	2.71E-09	1.52E-04	4.74E-04	2.54E-07	1.42E-02	4.46E-02
120	^{238}Pu	1.42E-06	7.98E-02	1.03E-05	1.40E-08	7.85E-04	1.01E-07	1.44E-06	8.06E-02	1.04E-05
121	^{239}Pu	1.97E-05	1.10E+00	3.92E-02	1.60E-07	8.94E-03	3.18E-04	1.99E-05	1.11E+00	3.95E-02
122	^{240}Pu	5.11E-06	2.86E-01	2.78E-03	4.17E-08	2.33E-03	2.27E-05	5.15E-06	2.88E-01	2.80E-03
123	^{241}Pu	1.07E-04	6.00E+00	1.28E-04	9.68E-07	5.42E-02	1.18E-06	1.08E-04	6.05E+00	1.30E-04
124	^{242}Pu	5.40E-10	3.03E-05	1.69E-05	4.19E-12	2.35E-07	1.31E-07	5.45E-10	3.05E-05	1.71E-05
125	^{125}Sb	2.96E-04	1.66E+01	3.52E-05	4.29E-06	2.40E-01	5.11E-07	3.00E-04	1.68E+01	3.57E-05
126	^{151}Sm	4.16E-03	2.33E+02	1.95E-02	1.06E-05	5.92E-01	4.96E-05	4.17E-03	2.34E+02	1.96E-02
127	^{126}Sn	4.71E-06	2.64E-01	5.12E-02	2.65E-08	1.49E-03	2.88E-04	4.74E-06	2.65E-01	5.15E-02
128	^{90}Sr	1.03E-01	5.78E+03	9.22E-02	7.23E-04	4.05E+01	6.46E-04	1.04E-01	5.82E+03	9.29E-02
129	^{99}Tc	8.18E-04	4.58E+01	5.96E+00	4.00E-04	2.24E+01	2.91E+00	1.22E-03	6.82E+01	8.87E+00
130	^{232}Th	7.65E-09	4.28E-04	8.58E+00	1.87E-09	1.05E-04	2.10E+00	9.52E-09	5.33E-04	1.07E+01
131	^{233}U	2.55E-07	1.43E-02	3.27E-03	5.19E-09	2.91E-04	6.65E-05	2.60E-07	1.46E-02	3.33E-03
132	^{234}U	1.81E-07	1.01E-02	3.60E-03	1.11E-09	6.21E-05	2.21E-05	1.82E-07	1.02E-02	3.62E-03
133	^{235}U	7.13E-09	3.99E-04	4.07E-01	4.06E-11	2.27E-06	2.32E-03	7.17E-09	4.01E-04	4.10E-01
134	^{236}U	1.22E-08	6.84E-04	2.33E-02	6.79E-11	3.80E-06	1.30E-04	1.23E-08	6.87E-04	2.34E-02
135	^{238}U	1.41E-07	7.91E-03	5.19E+01	8.23E-10	4.61E-05	3.02E-01	1.42E-07	7.96E-03	5.22E+01
136	(1) All radionuclides in gaseous streams are assumed to exist as solid particulate.									

Table C-13 LFP06 Stream Report

Stream Number:	LFP06
Stream Name:	LAW LFP Vents
Configuration:	MRQ-05-0049.acmf
Run Date / Time:	12/14/2005 - 1:42:25 PM
Run Data File:	H:\ACM v3.1\MRQ-05-0049\MRQ_05_0049A_Streams.csv

Stream Properties

Variable	Value	Units	
Density	1.14E-03	g/cm^3	(does not include solid phase)
Enthalpy	-6.17E+04	BTU/hr	
Mass Flow	4.88E+02	Lb/hr	
	1.17E+04	Lb/day	
Volumetric Flow	8.52E+02	GPM	(does not include solid phase)
	1.14E+02	ft^3/min	(does not include solid phase)
Molar Flow	1.71E+01	Lbmol/hr	
Molecular Weight	2.85E+01	Lb/Lbmol	
Pressure	1.00E+03	mbar	
Temperature	2.64E+01	C	
Na Molarity	0.00E+00	mol/L	
pH	4.51E+00	pH	
Total TRU	1.66E-13	Ci/L	
Total Activity	4.04E-11	Ci/L	

Component	Aqueous Comp			Solid Comp	Gaseous (1)		Total Comp		
Unit	mol/L	Lb/gal	Lb/day	Lb/day	mol/L	Lb/day	Lb/day	mt/day	g/sec
Total	1.90E-08	3.24E-09	3.98E-03	1.79E-03	4.02E-02	1.17E+04	1.17E+04	5.32E+00	6.16E+01
Ag^{+}	1.22E-14	1.10E-14	1.35E-08	4.72E-10	0.00E+00	0.00E+00	1.40E-08	6.35E-12	7.35E-11
Al^{+3}	1.48E-10	3.34E-11	4.09E-05	4.57E-05	0.00E+00	0.00E+00	8.66E-05	3.94E-08	4.56E-07
As^{+3}	5.39E-14	3.37E-14	4.13E-08	8.15E-09	0.00E+00	0.00E+00	4.95E-08	2.25E-11	2.60E-10
B^{+3}	5.93E-10	5.35E-11	6.57E-05	3.37E-06	0.00E+00	0.00E+00	6.90E-05	3.14E-08	3.63E-07
Ba^{+2}	1.12E-14	1.29E-14	1.58E-08	1.70E-10	0.00E+00	0.00E+00	1.60E-08	7.26E-12	8.40E-11
Bi^{+3}	1.33E-14	2.31E-14	2.84E-08	4.13E-10	0.00E+00	0.00E+00	2.88E-08	1.31E-11	1.51E-10
Ca^{+2}	1.67E-12	5.59E-13	6.86E-07	5.44E-05	0.00E+00	0.00E+00	5.50E-05	2.96E-08	3.42E-07
Cd^{+2}	2.09E-14	1.98E-14	2.41E-08	6.10E-09	0.00E+00	0.00E+00	3.02E-08	1.37E-11	1.59E-10
Ce^{+3}	4.99E-13	5.84E-13	7.16E-07	3.61E-09	0.00E+00	0.00E+00	7.20E-07	3.27E-10	3.79E-09
Cl^{-}	2.78E-11	8.23E-12	1.01E-05	1.59E-08	0.00E+00	0.00E+00	1.01E-05	4.60E-09	5.32E-08
CO	0.00E+00	0.00E+00	0.00E+00	0.00E+00	0.00E+00	0.00E+00	0.00E+00	0.00E+00	0.00E+00
CO_2	0.00E+00	0.00E+00	0.00E+00	0.00E+00	4.22E-33	1.90E-27	1.90E-27	8.65E-31	1.00E-29
CO_3^{-2}	1.19E-10	5.97E-11	7.32E-05	7.73E-05	0.00E+00	0.00E+00	1.51E-04	6.84E-08	7.92E-07
Cr^{+3}	3.58E-12	1.56E-12	1.91E-06	1.58E-07	0.00E+00	0.00E+00	2.07E-06	9.39E-10	1.09E-08
Cu^{+2}	2.07E-14	1.10E-14	1.34E-08	7.14E-11	0.00E+00	0.00E+00	1.35E-08	6.14E-12	7.11E-11
F^{-}	1.36E-11	2.15E-12	2.64E-06	2.45E-10	0.00E+00	0.00E+00	2.64E-06	1.20E-09	1.39E-08
Fe^{+3}	6.54E-13	3.05E-13	3.74E-07	9.11E-05	0.00E+00	0.00E+00	9.15E-05	4.16E-08	4.81E-07
H_2O	1.28E-08	1.93E-09	2.36E-03	0.00E+00	1.40E-03	2.58E+02	2.58E+02	1.17E-01	1.36E+00
$H_2O(b)$	0.00E+00	0.00E+00	0.00E+00	0.00E+00	0.00E+00	0.00E+00	0.00E+00	0.00E+00	0.00E+00
H^{+}	5.16E-23	4.34E-25	5.32E-19	0.00E+00	0.00E+00	0.00E+00	5.32E-19	2.42E-22	2.80E-21
HCL	0.00E+00	0.00E+00	0.00E+00	0.00E+00	0.00E+00	0.00E+00	0.00E+00	0.00E+00	0.00E+00
HCO3-	6.68E-34	3.40E-34	4.17E-28	9.78E-23	0.00E+00	0.00E+00	9.78E-23	4.45E-26	5.14E-25
H2CO3	0.00E+00	0.00E+00	0.00E+00	0.00E+00	0.00E+00	0.00E+00	0.00E+00	0.00E+00	0.00E+00
HF	0.00E+00	0.00E+00	0.00E+00	0.00E+00	0.00E+00	0.00E+00	0.00E+00	0.00E+00	0.00E+00
Hg^{+2}	2.16E-14	3.62E-14	4.44E-08	1.20E-07	0.00E+00	0.00E+00	1.64E-07	7.45E-11	8.63E-10
HNO_3	0.00E+00	0.00E+00	0.00E+00	0.00E+00	0.00E+00	0.00E+00	0.00E+00	0.00E+00	0.00E+00
K^{+}	5.32E-11	1.74E-11	2.13E-05	2.01E-07	0.00E+00	0.00E+00	2.15E-05	9.77E-09	1.13E-07
La^{+3}	5.73E-15	6.64E-15	8.15E-09	1.87E-10	0.00E+00	0.00E+00	8.34E-09	3.79E-12	4.39E-11
Li^{+}	2.43E-12	1.41E-13	1.73E-07	1.79E-05	0.00E+00	0.00E+00	1.81E-05	8.21E-09	9.50E-08
Mg^{+2}	1.70E-13	3.46E-14	4.24E-08	2.37E-05	0.00E+00	0.00E+00	2.37E-05	1.08E-08	1.25E-07
Mn^{+3}	1.85E-13	8.47E-14	1.04E-07	2.63E-07	0.00E+00	0.00E+00	3.67E-07	1.67E-10	1.93E-09
MnO_4^{-}	0.00E+00	0.00E+00	0.00E+00	0.00E+00	0.00E+00	0.00E+00	0.00E+00	0.00E+00	0.00E+00
N_2	3.66E-33	8.57E-34	1.05E-27	0.00E+00	3.06E-02	8.78E+03	8.78E+03	3.99E+00	4.62E+01
Na^{+}	1.64E-09	3.14E-10	3.85E-04	7.85E-08	0.00E+00	0.00E+00	3.85E-04	1.75E-07	2.03E-06
NH3	1.93E-13	2.74E-14	3.36E-08	0.00E+00	0.00E+00	0.00E+00	3.36E-08	1.53E-11	1.77E-10
NH4+	2.77E-32	2.74E-14	5.12E-27	4.32E-24	0.00E+00	0.00E+00	4.32E-24	1.96E-27	2.27E-26
Ni^{+2}	2.99E-13	1.46E-13	1.80E-07	2.39E-07	0.00E+00	0.00E+00	4.18E-07	1.90E-10	2.20E-09
NO	0.00E+00	0.00E+00	0.00E+00	0.00E+00	0.00E+00	0.00E+00	0.00E+00	0.00E+00	0.00E+00
NO_2	0.00E+00	0.00E+00	0.00E+00	0.00E+00	0.00E+00	0.00E+00	0.00E+00	0.00E+00	0.00E+00
NO_2^{-}	3.22E-10	1.24E-10	1.52E-04	6.82E-10	0.00E+00	0.00E+00	1.52E-04	6.89E-08	7.98E-07

CALCULATION SHEET

BY. E. Bernos
DATE: 12/22/05

PROJECT. WTP
JOB NO.: 24590
CALC NO.: 24590-WTP-M4C-FRP-00003
SHEET REV: D
SHEET NO.: C-27

SUBJECT: Integrated Baseline Emissions Report Non-SSFM Represented Constituents Emissions Rate Estimation

	A	B	C	D	E	F	G	H	I	J
69	NO_3^-	5.88E-10	3.04E-10	3.73E-04	5.25E-10	0.00E+00	0.00E+00	3.73E-04	1.70E-07	1.96E-06
70	O_2	1.94E-35	5.18E-36	6.36E-30	0.00E+00	8.14E-03	2.67E+03	2.67E+03	1.21E+00	1.40E+01
71	O^-	0.00E+00	0.00E+00	0.00E+00	3.18E-04	0.00E+00	0.00E+00	3.18E-04	1.45E-07	1.67E-06
72	OH^-	3.20E-10	4.55E-11	5.58E-05	2.07E-09	0.00E+00	0.00E+00	5.58E-05	2.54E-08	2.93E-07
73	$OH(b)^-$	2.37E-09	3.36E-10	4.13E-04	0.00E+00	0.00E+00	0.00E+00	4.13E-04	1.88E-07	2.17E-06
74	Pb^{+2}	7.58E-14	1.31E-13	1.61E-07	2.69E-09	0.00E+00	0.00E+00	1.64E-07	7.43E-11	8.60E-10
75	Pd^{+2}	5.87E-15	5.21E-15	6.40E-09	3.61E-11	0.00E+00	0.00E+00	6.43E-09	2.92E-12	3.38E-11
76	PO_4^{-3}	6.05E-12	4.79E-12	5.88E-06	6.26E-07	0.00E+00	0.00E+00	6.51E-06	2.96E-09	3.42E-08
77	Resin	0.00E+00	0.00E+00	0.00E+00	0.00E+00	0.00E+00	0.00E+00	0.00E+00	0.00E+00	0.00E+00
78	Rh^{+3}	5.68E-15	4.88E-15	5.98E-09	1.16E-10	0.00E+00	0.00E+00	6.10E-09	2.77E-12	3.21E-11
79	Ru^{+3}	8.44E-15	7.12E-15	8.73E-09	2.75E-09	0.00E+00	0.00E+00	1.15E-08	5.22E-12	6.04E-11
80	S^{+6}	0.00E+00	0.00E+00	0.00E+00	3.12E-23	0.00E+00	0.00E+00	3.12E-23	1.42E-26	1.64E-25
81	SiO2	1.14E-12	5.73E-13	7.03E-07	1.02E-03	0.00E+00	0.00E+00	1.02E-03	4.65E-07	5.38E-06
82	SiO_4^{-4}	8.73E-25	6.71E-25	8.23E-19	0.00E+00	0.00E+00	0.00E+00	8.23E-19	3.74E-22	4.33E-21
83	SO_2	0.00E+00	0.00E+00	0.00E+00	0.00E+00	0.00E+00	0.00E+00	0.00E+00	0.00E+00	0.00E+00
84	SO_4^{-2}	1.44E-11	1.16E-11	1.42E-05	2.68E-07	0.00E+00	0.00E+00	1.45E-05	6.58E-09	7.62E-08
85	Sr^{+2}	3.07E-15	2.25E-15	2.76E-09	2.04E-11	0.00E+00	0.00E+00	2.78E-09	1.26E-12	1.46E-11
86	Sucrose	0.00E+00	0.00E+00	0.00E+00	0.00E+00	0.00E+00	0.00E+00	0.00E+00	0.00E+00	0.00E+00
87	Ti^{+4}	9.42E-15	3.76E-15	4.62E-09	1.94E-05	0.00E+00	0.00E+00	1.94E-05	8.80E-09	1.02E-07
88	Zn^{+2}	3.52E-14	1.92E-14	2.36E-08	5.43E-05	0.00E+00	0.00E+00	5.44E-05	2.47E-08	2.86E-07
89	Zr^{+4}	2.80E-14	1.98E-14	2.43E-08	5.00E-05	0.00E+00	0.00E+00	5.00E-05	2.27E-08	2.63E-07
90										
91	**Components**	**Aqueous Comp**			**Solid Comp**	**Gaseous**		**Total Comp**		
92	**Unit**	**mol/L**	**Lb/gal**	**Lb/day**	**Lb/day**	**mol/L**	**Lb/day**	**Lb/day**	**Mt/day**	**g/sec**
93	**Total**	5.46E-12	4.01E-12	4.92E-06	2.71E-05	0.00E+00	0.00E+00	3.20E-05	1.46E-08	1.69E-07
94	$C_2O_4^{-2}$	5.46E-12	4.01E-12	4.92E-06	2.71E-05	0.00E+00	0.00E+00	3.20E-05	1.46E-08	1.69E-07
95	Formate	3.43E-24	1.29E-24	1.58E-18	0.00E+00	0.00E+00	0.00E+00	1.58E-18	7.19E-22	8.32E-21
96	Acetate	2.66E-24	1.31E-24	1.61E-18	0.00E+00	0.00E+00	0.00E+00	1.61E-18	7.31E-22	8.46E-21
97	Glycolate	1.77E-23	1.11E-23	1.36E-17	0.00E+00	0.00E+00	0.00E+00	1.36E-17	6.18E-21	7.15E-20
98	IDA	9.38E-24	1.04E-23	1.28E-17	0.00E+00	0.00E+00	0.00E+00	1.28E-17	5.81E-21	6.73E-20
99	Citrate	8.58E-25	1.38E-24	1.69E-18	0.00E+00	0.00E+00	0.00E+00	1.69E-18	7.67E-22	8.88E-21
100	HEDTA	4.02E-24	9.33E-24	1.14E-17	0.00E+00	0.00E+00	0.00E+00	1.14E-17	5.20E-21	6.02E-20
101	EDTA	4.83E-25	1.18E-24	1.44E-18	0.00E+00	0.00E+00	0.00E+00	1.44E-18	6.56E-22	7.60E-21
102										
103	**Rad. Comp**	**Aqueous Rad. Comp**			**Solids Rad. Comp (1)**			**Total Rad. Comp (1)**		
104	**Unit**	**Ci/L**	**Ci/day**	**Lb/day**	**Ci/L**	**Ci/day**	**Lb/day**	**Ci/L**	**Ci/day**	**Lb/day**
105	**Total**	4.00E-11	1.86E-04	2.02E-06	4.72E-13	2.19E-06	1.40E-07	4.04E-11	1.88E-04	2.16E-06
106	^{241}Am	1.15E-13	5.35E-07	3.44E-10	2.10E-15	9.75E-09	6.27E-12	1.17E-13	5.44E-07	3.50E-10
107	^{243}Am	7.52E-17	3.49E-10	3.86E-12	1.00E-18	4.65E-12	5.14E-14	7.62E-17	3.54E-10	3.91E-12
108	^{14}C	2.35E-15	1.09E-08	5.39E-12	4.49E-20	2.09E-13	1.03E-16	2.35E-15	1.09E-08	5.39E-12
109	^{60}Co	1.54E-14	7.16E-08	1.40E-13	1.47E-16	6.82E-10	1.33E-15	1.56E-14	7.23E-08	1.41E-13
110	^{243}Cm	1.24E-17	5.76E-11	2.51E-15	9.56E-19	4.44E-12	1.94E-16	1.34E-17	6.21E-11	2.71E-15
111	^{244}Cm	2.94E-16	1.36E-09	3.72E-14	2.18E-17	1.01E-10	2.76E-15	3.15E-16	1.46E-09	3.99E-14
112	^{137}Cs	2.49E-14	1.16E-07	2.93E-12	5.22E-14	2.42E-07	6.15E-12	7.71E-14	3.58E-07	9.09E-12
113	^{152}Eu	8.66E-16	4.02E-09	5.10E-14	7.75E-18	3.60E-11	4.56E-16	8.74E-16	4.06E-09	5.15E-14
114	^{154}Eu	1.80E-13	8.34E-07	6.80E-12	1.27E-15	5.89E-09	4.81E-14	1.81E-13	8.40E-07	6.85E-12
115	^{155}Eu	5.19E-14	2.41E-07	1.09E-12	3.15E-16	1.46E-09	6.64E-15	5.22E-14	2.43E-07	1.10E-12
116	^{3}H	1.71E-15	7.93E-09	1.82E-15	8.22E-16	3.82E-09	8.76E-16	2.53E-15	1.18E-08	2.70E-15
117	^{129}I	7.15E-17	3.32E-10	4.15E-09	1.27E-17	5.92E-11	7.39E-10	8.43E-17	3.91E-10	4.89E-09
118	^{63}Ni	2.78E-13	1.29E-06	5.01E-11	3.13E-15	1.45E-08	5.65E-13	2.81E-13	1.31E-06	5.07E-11
119	^{237}Np	9.11E-17	4.23E-10	1.32E-09	9.79E-19	4.55E-12	1.42E-11	9.20E-17	4.27E-10	1.34E-09
120	^{238}Pu	5.15E-16	2.39E-09	3.08E-13	5.07E-18	2.35E-11	3.03E-15	5.20E-16	2.42E-09	3.11E-13
121	^{239}Pu	7.12E-15	3.31E-08	1.18E-09	5.77E-17	2.68E-10	9.53E-12	7.18E-15	3.34E-08	1.19E-09
122	^{240}Pu	1.85E-15	8.58E-09	8.33E-11	1.51E-17	7.00E-11	6.80E-13	1.86E-15	8.65E-09	8.40E-11
123	^{241}Pu	3.88E-14	1.80E-07	3.85E-12	3.50E-16	1.63E-09	3.48E-14	3.91E-14	1.82E-07	3.89E-12
124	^{242}Pu	1.95E-19	9.08E-13	5.08E-13	1.52E-21	7.04E-15	3.94E-15	1.97E-19	9.15E-13	5.12E-13
125	^{125}Sb	1.07E-13	4.97E-07	1.06E-12	1.55E-15	7.21E-09	1.53E-14	1.09E-13	5.05E-07	1.07E-12
126	^{151}Sm	1.50E-12	6.99E-06	5.85E-10	3.83E-15	1.78E-08	1.49E-12	1.51E-12	7.01E-06	5.87E-10
127	^{126}Sn	1.70E-15	7.91E-09	1.54E-09	9.60E-18	4.46E-11	8.65E-12	1.71E-15	7.96E-09	1.54E-09
128	^{90}Sr	3.73E-11	1.73E-04	2.77E-09	2.61E-13	1.21E-06	1.94E-11	3.76E-11	1.75E-04	2.79E-09
129	^{99}Tc	2.96E-13	1.37E-06	1.79E-07	1.45E-13	6.72E-07	8.74E-08	4.41E-13	2.05E-06	2.66E-07
130	^{232}Th	2.77E-18	1.28E-11	2.57E-07	4.62E-19	2.14E-12	4.30E-08	3.23E-18	1.50E-11	3.00E-07
131	^{233}U	9.22E-17	4.28E-10	9.80E-11	1.88E-18	8.72E-12	2.00E-12	9.41E-17	4.37E-10	1.00E-10
132	^{234}U	6.54E-17	3.04E-10	1.08E-10	4.01E-19	1.86E-12	6.62E-13	6.58E-17	3.06E-10	1.09E-10
133	^{235}U	2.58E-18	1.20E-11	1.22E-08	1.47E-20	6.81E-14	6.95E-11	2.59E-18	1.20E-11	1.23E-08
134	^{236}U	4.42E-18	2.05E-11	6.99E-10	2.46E-20	1.14E-13	3.89E-12	4.44E-18	2.06E-11	7.03E-10
135	^{238}U	5.11E-17	2.37E-10	1.56E-06	2.98E-19	1.38E-12	9.07E-09	5.14E-17	2.39E-10	1.57E-06
136	(1) All radionuclides in gaseous streams are assumed to exist as solid particulate.									

	A	B	C	D	E	F	G	H	I	J
1	**Table C-14 LMP06 Stream Report**									
3	**Stream Number:**		LMP06							
4	**Stream Name:**		Melter offgas (primary)							
5	**Configuration:**		MRQ-05-0049.acmf							
6	**Run Date / Time:**		12/14/2005 - 1:42:25 PM							
7	**Run Data File:**		H:\ACM v3.1\MRQ-05-0049\MRQ_05_0049A_Streams.csv							
8										
9	**Stream Properties**									
10	**Variable**	**Value**	**Units**							
11	Density	4.01E-04	g/cm^3	(does not include solid phase)						
12	Enthalpy	-2.53E+07	BTU/hr							
13	Mass Flow	8.97E+03	Lb/hr							
14		2.15E+05	Lb/day							
15	Volumetric Flow	4.43E+04	GPM	(does not include solid phase)						
16		5.92E+03	ft^3/min	(does not include solid phase)						
17	Molar Flow	3.90E+02	Lbmol/hr							
18	Molecular Weight	2.28E+01	Lb/Lbmol							
19	Pressure	9.83E+02	mbar							
20	Temperature	4.00E+02	C							
21	Na Molarity	0.00E+00	mol/L							
22	pH	0.00E+00	pH							
23	Total TRU	1.10E-09	Ci/L							
24	Total Activity	3.68E-07	Ci/L							
25										
26	**Component**	**Aqueous Comp**			**Solid Comp**	**Gaseous (1)**		**Total Comp**		
27	**Unit**	**mol/L**	**Lb/gal**	**Lb/day**	**Lb/day**	**mol/L**	**Lb/day**	**Lb/day**	**mt/day**	**g/sec**
28	**Total**	0.00E+00	0.00E+00	0.00E+00	1.01E+03	1.76E-02	2.13E+05	2.14E+05	9.72E+01	1.13E+03
29	Ag^{+}	0.00E+00	0.00E+00	0.00E+00	1.55E-02	0.00E+00	0.00E+00	1.55E-02	7.06E-06	8.17E-05
30	Al^{+3}	0.00E+00	0.00E+00	0.00E+00	3.63E+01	0.00E+00	0.00E+00	3.63E+01	1.65E-02	1.91E-01
31	As^{+3}	0.00E+00	0.00E+00	0.00E+00	2.75E-01	0.00E+00	0.00E+00	2.75E-01	1.25E-04	1.45E-03
32	B^{+3}	0.00E+00	0.00E+00	0.00E+00	1.13E+02	0.00E+00	0.00E+00	1.13E+02	5.14E-02	5.95E-01
33	Ba^{+2}	0.00E+00	0.00E+00	0.00E+00	5.32E-03	0.00E+00	0.00E+00	5.32E-03	2.42E-06	2.80E-05
34	Bi^{+3}	0.00E+00	0.00E+00	0.00E+00	1.20E-02	0.00E+00	0.00E+00	1.20E-02	5.45E-06	6.31E-05
35	Ca^{+2}	0.00E+00	0.00E+00	0.00E+00	4.30E+01	0.00E+00	0.00E+00	4.30E+01	1.95E-02	2.26E-01
36	Cd^{+2}	0.00E+00	0.00E+00	0.00E+00	1.05E-01	0.00E+00	0.00E+00	1.05E-01	4.79E-05	5.54E-04
37	Ce^{+3}	0.00E+00	0.00E+00	0.00E+00	1.20E-01	0.00E+00	0.00E+00	1.20E-01	5.45E-05	6.31E-04
38	Cl^{-}	0.00E+00	0.00E+00	0.00E+00	0.00E+00	0.00E+00	0.00E+00	0.00E+00	0.00E+00	0.00E+00
39	CO	0.00E+00	0.00E+00	0.00E+00	0.00E+00	6.30E-06	9.39E+01	9.39E+01	4.27E-02	4.94E-01
40	CO_2	0.00E+00	0.00E+00	0.00E+00	0.00E+00	6.30E-04	1.48E+04	1.48E+04	6.71E+00	7.76E+01
41	CO_3^{-2}	0.00E+00	0.00E+00	0.00E+00	0.00E+00	0.00E+00	0.00E+00	0.00E+00	0.00E+00	0.00E+00
42	Cr^{+3}	0.00E+00	0.00E+00	0.00E+00	1.72E+00	0.00E+00	0.00E+00	1.72E+00	7.83E-04	9.07E-03
43	Cu^{+2}	0.00E+00	0.00E+00	0.00E+00	2.25E-03	0.00E+00	0.00E+00	2.25E-03	1.02E-06	1.18E-05
44	F^{-}	0.00E+00	0.00E+00	0.00E+00	0.00E+00	0.00E+00	0.00E+00	0.00E+00	0.00E+00	0.00E+00
45	Fe^{+3}	0.00E+00	0.00E+00	0.00E+00	2.28E+01	0.00E+00	0.00E+00	2.28E+01	1.04E-02	1.20E-01
46	H_2O	0.00E+00	0.00E+00	0.00E+00	0.00E+00	1.10E-02	1.05E+05	1.05E+05	4.78E+01	5.53E+02
47	$H_2O(b)$	0.00E+00	0.00E+00	0.00E+00	0.00E+00	0.00E+00	0.00E+00	0.00E+00	0.00E+00	0.00E+00
48	H^{+}	0.00E+00	0.00E+00	0.00E+00	0.00E+00	0.00E+00	0.00E+00	0.00E+00	0.00E+00	0.00E+00
49	HCL	0.00E+00	0.00E+00	0.00E+00	0.00E+00	9.41E-06	1.83E+02	1.83E+02	8.30E-02	9.61E-01
50	HCO3-	0.00E+00	0.00E+00	0.00E+00	3.26E-15	0.00E+00	0.00E+00	3.26E-15	1.48E-18	1.71E-17
51	H2CO3	0.00E+00	0.00E+00	0.00E+00	0.00E+00	0.00E+00	0.00E+00	0.00E+00	0.00E+00	0.00E+00
52	HF	0.00E+00	0.00E+00	0.00E+00	0.00E+00	2.17E-06	2.32E+01	2.32E+01	1.05E-02	1.22E-01
53	Hg^{+2}	0.00E+00	0.00E+00	0.00E+00	5.47E+00	0.00E+00	0.00E+00	5.47E+00	2.48E-03	2.88E-02
54	HNO_3	0.00E+00	0.00E+00	0.00E+00	0.00E+00	0.00E+00	0.00E+00	0.00E+00	0.00E+00	0.00E+00
55	K^{+}	0.00E+00	0.00E+00	0.00E+00	3.60E+01	0.00E+00	0.00E+00	3.60E+01	1.64E-02	1.89E-01
56	La^{+3}	0.00E+00	0.00E+00	0.00E+00	5.56E-03	0.00E+00	0.00E+00	5.56E-03	2.53E-06	2.92E-05
57	Li^{+}	0.00E+00	0.00E+00	0.00E+00	8.98E+00	0.00E+00	0.00E+00	8.98E+00	4.08E-03	4.72E-02
58	Mg^{+2}	0.00E+00	0.00E+00	0.00E+00	5.91E+00	0.00E+00	0.00E+00	5.91E+00	2.69E-03	3.11E-02
59	Mn^{+3}	0.00E+00	0.00E+00	0.00E+00	2.20E-01	0.00E+00	0.00E+00	2.20E-01	1.00E-04	1.16E-03
60	MnO_4^{-}	0.00E+00	0.00E+00	0.00E+00	0.00E+00	0.00E+00	0.00E+00	0.00E+00	0.00E+00	0.00E+00
61	N_2	0.00E+00	0.00E+00	0.00E+00	0.00E+00	4.12E-03	6.15E+04	6.15E+04	2.80E+01	3.24E+02
62	Na^{+}	0.00E+00	0.00E+00	0.00E+00	1.28E+02	0.00E+00	0.00E+00	1.28E+02	5.84E-02	6.76E-01
63	NH3	0.00E+00	0.00E+00	0.00E+00	0.00E+00	1.24E-06	1.12E+01	1.12E+01	5.09E-03	5.90E-02
64	NH4+	0.00E+00	0.00E+00	0.00E+00	1.44E-16	0.00E+00	0.00E+00	1.44E-16	6.55E-20	7.58E-19
65	Ni^{+2}	0.00E+00	0.00E+00	0.00E+00	2.00E-01	0.00E+00	0.00E+00	2.00E-01	9.10E-05	1.05E-03
66	NO	0.00E+00	0.00E+00	0.00E+00	0.00E+00	3.07E-04	4.91E+03	4.91E+03	2.23E+00	2.58E+01
67	NO_2	0.00E+00	0.00E+00	0.00E+00	0.00E+00	2.81E-05	6.87E+02	6.87E+02	3.12E-01	3.62E+00
68	NO_2^{-}	0.00E+00	0.00E+00	0.00E+00	0.00E+00	0.00E+00	0.00E+00	0.00E+00	0.00E+00	0.00E+00

CALCULATION SHEET

BY: E. Barrios
DATE: 12/22/05

PROJECT: WTP
JOB NO.: 24590
CALC NO.: 24590-WTP-M4C-FRP-00003
SHEET REV: D
SHEET NO.: C-29

SUBJECT: Integrated Baseline Emissions Report Non-SSFM Represented Constituents Emissions Rate Estimation

	A	B	C	D	E	F	G	H	I	J
69	NO_3^-	0.00E+00	0.00E+00	0.00E+00	0.00E+00	0.00E+00	0.00E+00	0.00E+00	0.00E+00	0.00E+00
70	O_2	0.00E+00	0.00E+00	0.00E+00	0.00E+00	1.50E-03	2.56E+04	2.56E+04	1.16E+01	1.35E+02
71	O^-	0.00E+00	0.00E+00	0.00E+00	3.92E+02	0.00E+00	0.00E+00	3.92E+02	1.78E-01	2.06E+00
72	OH^-	0.00E+00	0.00E+00	0.00E+00	0.00E+00	0.00E+00	0.00E+00	0.00E+00	0.00E+00	0.00E+00
73	$OH(b)^-$	0.00E+00	0.00E+00	0.00E+00	0.00E+00	0.00E+00	0.00E+00	0.00E+00	0.00E+00	0.00E+00
74	Pb^{+2}	0.00E+00	0.00E+00	0.00E+00	6.66E-02	0.00E+00	0.00E+00	6.66E-02	3.03E-05	3.50E-04
75	Pd^{+2}	0.00E+00	0.00E+00	0.00E+00	1.07E-03	0.00E+00	0.00E+00	1.07E-03	4.87E-07	5.64E-06
76	PO_4^{-3}	0.00E+00	0.00E+00	0.00E+00	5.62E+00	0.00E+00	0.00E+00	5.62E+00	2.55E-03	2.96E-02
77	Resin	0.00E+00	0.00E+00	0.00E+00	0.00E+00	0.00E+00	0.00E+00	0.00E+00	0.00E+00	0.00E+00
78	Rh^{+3}	0.00E+00	0.00E+00	0.00E+00	3.84E-03	0.00E+00	0.00E+00	3.84E-03	1.74E-06	2.02E-05
79	Ru^{+3}	0.00E+00	0.00E+00	0.00E+00	9.81E-02	0.00E+00	0.00E+00	9.81E-02	4.46E-05	5.16E-04
80	S^{+6}	0.00E+00	0.00E+00	0.00E+00	0.00E+00	0.00E+00	0.00E+00	0.00E+00	0.00E+00	0.00E+00
81	SiO2	0.00E+00	0.00E+00	0.00E+00	1.70E+02	0.00E+00	0.00E+00	1.70E+02	7.74E-02	8.95E-01
82	SiO_4^{-4}	0.00E+00	0.00E+00	0.00E+00	9.15E-14	0.00E+00	0.00E+00	9.15E-14	4.16E-17	4.81E-16
83	SO_2	0.00E+00	0.00E+00	0.00E+00	0.00E+00	5.20E-07	1.77E+01	1.77E+01	8.06E-03	9.33E-02
84	SO_4^{-2}	0.00E+00	0.00E+00	0.00E+00	0.00E+00	0.00E+00	0.00E+00	0.00E+00	0.00E+00	0.00E+00
85	Sr^{+2}	0.00E+00	0.00E+00	0.00E+00	9.26E-04	0.00E+00	0.00E+00	9.26E-04	4.21E-07	4.87E-06
86	Sucrose	0.00E+00	0.00E+00	0.00E+00	0.00E+00	0.00E+00	0.00E+00	0.00E+00	0.00E+00	0.00E+00
87	Ti^{+4}	0.00E+00	0.00E+00	0.00E+00	5.23E-01	0.00E+00	0.00E+00	5.23E-01	2.38E-04	2.75E-03
88	Zn^{+2}	0.00E+00	0.00E+00	0.00E+00	2.70E+01	0.00E+00	0.00E+00	2.70E+01	1.23E-02	1.42E-01
89	Zr^{+4}	0.00E+00	0.00E+00	0.00E+00	8.32E+00	0.00E+00	0.00E+00	8.32E+00	3.78E-03	4.38E-02
90										
91	**Components**	**Aqueous Comp**			**Solid Comp**	**Gaseous**		**Total Comp**		
92	**Unit**	**mol/L**	**Lb/gal**	**Lb/day**	**Lb/day**	**mol/L**	**Lb/day**	**Lb/day**	**Mt/day**	**g/sec**
93	**Total**	0.00E+00	0.00E+00	0.00E+00	9.71E+02	0.00E+00	0.00E+00	9.71E+02	4.41E-01	5.11E+00
94	$C_2O_4^{-2}$	0.00E+00	0.00E+00	0.00E+00	9.71E+02	0.00E+00	0.00E+00	9.71E+02	4.41E-01	5.11E+00
95	Formate	0.00E+00	0.00E+00	0.00E+00	4.79E-11	0.00E+00	0.00E+00	4.79E-11	2.18E-14	2.52E-13
96	Acetate	0.00E+00	0.00E+00	0.00E+00	4.87E-11	0.00E+00	0.00E+00	4.87E-11	2.21E-14	2.56E-13
97	Glycolate	0.00E+00	0.00E+00	0.00E+00	4.12E-10	0.00E+00	0.00E+00	4.12E-10	1.87E-13	2.17E-12
98	IDA	0.00E+00	0.00E+00	0.00E+00	3.88E-10	0.00E+00	0.00E+00	3.88E-10	1.76E-13	2.04E-12
99	Citrate	0.00E+00	0.00E+00	0.00E+00	5.11E-11	0.00E+00	0.00E+00	5.11E-11	2.32E-14	2.69E-13
100	HEDTA	0.00E+00	0.00E+00	0.00E+00	3.47E-10	0.00E+00	0.00E+00	3.47E-10	1.58E-13	1.82E-12
101	EDTA	0.00E+00	0.00E+00	0.00E+00	4.38E-11	0.00E+00	0.00E+00	4.38E-11	1.99E-14	2.30E-13
102										
103	**Rad. Comp**	**Aqueous Rad. Comp**			**Solids Rad. Comp (1)**			**Total Rad. Comp (1)**		
104	**Unit**	**Ci/L**	**Ci/day**	**Lb/day**	**Ci/L**	**Ci/day**	**Lb/day**	**Ci/L**	**Ci/day**	**Lb/day**
105	**Total**	0.00E+00	0.00E+00	0.00E+00	3.68E-07	8.90E+01	3.41E+00	3.68E-07	8.90E+01	3.41E+00
106	^{241}Am	0.00E+00	0.00E+00	0.00E+00	9.39E-10	2.27E-01	1.46E-04	9.39E-10	2.27E-01	1.46E-04
107	^{243}Am	0.00E+00	0.00E+00	0.00E+00	6.11E-13	1.48E-04	1.63E-06	6.11E-13	1.48E-04	1.63E-06
108	^{14}C	0.00E+00	0.00E+00	0.00E+00	1.51E-09	3.64E-01	1.80E-04	1.51E-09	3.64E-01	1.80E-04
109	^{60}Co	0.00E+00	0.00E+00	0.00E+00	4.99E-11	1.21E-02	2.35E-08	4.99E-11	1.21E-02	2.35E-08
110	^{243}Cm	0.00E+00	0.00E+00	0.00E+00	4.28E-14	1.03E-05	4.51E-10	4.28E-14	1.03E-05	4.51E-10
111	^{244}Cm	0.00E+00	0.00E+00	0.00E+00	1.01E-12	2.44E-04	6.65E-09	1.01E-12	2.44E-04	6.65E-09
112	^{137}Cs	0.00E+00	0.00E+00	0.00E+00	2.47E-08	5.96E+00	1.51E-04	2.47E-08	5.96E+00	1.51E-04
113	^{152}Eu	0.00E+00	0.00E+00	0.00E+00	2.80E-12	6.77E-04	8.58E-09	2.80E-12	6.77E-04	8.58E-09
114	^{154}Eu	0.00E+00	0.00E+00	0.00E+00	5.80E-10	1.40E-01	1.14E-06	5.80E-10	1.40E-01	1.14E-06
115	^{155}Eu	0.00E+00	0.00E+00	0.00E+00	1.67E-10	4.04E-02	1.84E-07	1.67E-10	4.04E-02	1.84E-07
116	^{3}H	0.00E+00	0.00E+00	0.00E+00	1.62E-09	3.92E-01	8.99E-08	1.62E-09	3.92E-01	8.99E-08
117	^{129}I	0.00E+00	0.00E+00	0.00E+00	4.91E-11	1.19E-02	1.48E-01	4.91E-11	1.19E-02	1.48E-01
118	^{63}Ni	0.00E+00	0.00E+00	0.00E+00	2.03E-09	4.89E-01	1.90E-05	2.03E-09	4.89E-01	1.90E-05
119	^{237}Np	0.00E+00	0.00E+00	0.00E+00	2.95E-13	7.12E-05	2.23E-04	2.95E-13	7.12E-05	2.23E-04
120	^{238}Pu	0.00E+00	0.00E+00	0.00E+00	1.67E-12	4.03E-04	5.19E-08	1.67E-12	4.03E-04	5.19E-08
121	^{239}Pu	0.00E+00	0.00E+00	0.00E+00	2.30E-11	5.56E-03	1.98E-04	2.30E-11	5.56E-03	1.98E-04
122	^{240}Pu	0.00E+00	0.00E+00	0.00E+00	5.97E-12	1.44E-03	1.40E-05	5.97E-12	1.44E-03	1.40E-05
123	^{241}Pu	0.00E+00	0.00E+00	0.00E+00	1.25E-10	3.03E-02	6.48E-07	1.25E-10	3.03E-02	6.48E-07
124	^{242}Pu	0.00E+00	0.00E+00	0.00E+00	6.31E-16	1.52E-07	8.54E-08	6.31E-16	1.52E-07	8.54E-08
125	^{125}Sb	0.00E+00	0.00E+00	0.00E+00	8.71E-10	2.10E-01	4.47E-07	8.71E-10	2.10E-01	4.47E-07
126	^{151}Sm	0.00E+00	0.00E+00	0.00E+00	7.06E-10	1.70E-01	1.43E-05	7.06E-10	1.70E-01	1.43E-05
127	^{126}Sn	0.00E+00	0.00E+00	0.00E+00	5.49E-12	1.33E-03	2.57E-04	5.49E-12	1.33E-03	2.57E-04
128	^{90}Sr	0.00E+00	0.00E+00	0.00E+00	2.41E-07	5.82E+01	9.29E-04	2.41E-07	5.82E+01	9.29E-04
129	^{99}Tc	0.00E+00	0.00E+00	0.00E+00	9.41E-08	2.27E+01	2.96E+00	9.41E-08	2.27E+01	2.96E+00
130	^{232}Th	0.00E+00	0.00E+00	0.00E+00	8.83E-15	2.13E-06	4.27E-02	8.83E-15	2.13E-06	4.27E-02
131	^{233}U	0.00E+00	0.00E+00	0.00E+00	3.01E-13	7.28E-05	1.67E-05	3.01E-13	7.28E-05	1.67E-05
132	^{234}U	0.00E+00	0.00E+00	0.00E+00	2.11E-13	5.10E-05	1.81E-05	2.11E-13	5.10E-05	1.81E-05
133	^{235}U	0.00E+00	0.00E+00	0.00E+00	8.31E-15	2.01E-06	2.05E-03	8.31E-15	2.01E-06	2.05E-03
134	^{236}U	0.00E+00	0.00E+00	0.00E+00	1.42E-14	3.44E-06	1.17E-04	1.42E-14	3.44E-06	1.17E-04
135	^{238}U	0.00E+00	0.00E+00	0.00E+00	1.65E-13	3.98E-05	2.61E-01	1.65E-13	3.98E-05	2.61E-01
136	(1) All radionuclides in gaseous streams are assumed to exist as solid particulate.									

Table C-15 LVP01 Stream Report

Stream Number:	LVP01
Stream Name:	LAW vessel ventilation header offgas
Configuration:	MRQ-05-0049.acmf
Run Date / Time:	12/14/2005 - 1:42:25 PM
Run Data File:	H:\ACM v3.1\MRQ-05-0049\MRQ_05_0049A_Streams.csv

Stream Properties

Variable	Value	Units	
Density	1.01E-03	g/cm^3	(does not include solid phase)
Enthalpy	-1.05E+05	BTU/hr	
Mass Flow	1.93E+03	Lb/hr	
	4.63E+04	Lb/day	
Volumetric Flow	3.82E+03	GPM	(does not include solid phase)
	5.11E+02	ft^3/min	(does not include solid phase)
Molar Flow	6.73E+01	Lbmol/hr	
Molecular Weight	2.87E+01	Lb/Lbmol	
Pressure	8.92E+02	mbar	
Temperature	3.20E+01	C	
Na Molarity	0.00E+00	mol/L	
pH	0.00E+00	pH	
Total TRU	0.00E+00	Ci/L	
Total Activity	0.00E+00	Ci/L	

Component	Aqueous Comp			Solid Comp	Gaseous (1)		Total Comp		
Unit	mol/L	Lb/gal	Lb/day	Lb/day	mol/L	Lb/day	Lb/day	mt/day	g/sec
Total	0.00E+00	0.00E+00	0.00E+00	0.00E+00	3.52E-02	4.63E+04	4.63E+04	2.10E+01	2.44E+02
Ag^+	0.00E+00	0.00E+00	0.00E+00	0.00E+00	0.00E+00	0.00E+00	0.00E+00	0.00E+00	0.00E+00
Al^{+3}	0.00E+00	0.00E+00	0.00E+00	0.00E+00	0.00E+00	0.00E+00	0.00E+00	0.00E+00	0.00E+00
As^{+3}	0.00E+00	0.00E+00	0.00E+00	0.00E+00	0.00E+00	0.00E+00	0.00E+00	0.00E+00	0.00E+00
B^{+3}	0.00E+00	0.00E+00	0.00E+00	0.00E+00	0.00E+00	0.00E+00	0.00E+00	0.00E+00	0.00E+00
Ba^{+2}	0.00E+00	0.00E+00	0.00E+00	0.00E+00	0.00E+00	0.00E+00	0.00E+00	0.00E+00	0.00E+00
Bi^{+3}	0.00E+00	0.00E+00	0.00E+00	0.00E+00	0.00E+00	0.00E+00	0.00E+00	0.00E+00	0.00E+00
Ca^{+2}	0.00E+00	0.00E+00	0.00E+00	0.00E+00	0.00E+00	0.00E+00	0.00E+00	0.00E+00	0.00E+00
Cd^{+2}	0.00E+00	0.00E+00	0.00E+00	0.00E+00	0.00E+00	0.00E+00	0.00E+00	0.00E+00	0.00E+00
Ce^{+3}	0.00E+00	0.00E+00	0.00E+00	0.00E+00	0.00E+00	0.00E+00	0.00E+00	0.00E+00	0.00E+00
Cl^-	0.00E+00	0.00E+00	0.00E+00	0.00E+00	0.00E+00	0.00E+00	0.00E+00	0.00E+00	0.00E+00
CO	0.00E+00	0.00E+00	0.00E+00	0.00E+00	0.00E+00	0.00E+00	0.00E+00	0.00E+00	0.00E+00
CO_2	0.00E+00	0.00E+00	0.00E+00	0.00E+00	0.00E+00	0.00E+00	0.00E+00	0.00E+00	0.00E+00
CO_3^{-2}	0.00E+00	0.00E+00	0.00E+00	0.00E+00	0.00E+00	0.00E+00	0.00E+00	0.00E+00	0.00E+00
Cr^{+3}	0.00E+00	0.00E+00	0.00E+00	0.00E+00	0.00E+00	0.00E+00	0.00E+00	0.00E+00	0.00E+00
Cu^{+2}	0.00E+00	0.00E+00	0.00E+00	0.00E+00	0.00E+00	0.00E+00	0.00E+00	0.00E+00	0.00E+00
F^-	0.00E+00	0.00E+00	0.00E+00	0.00E+00	0.00E+00	0.00E+00	0.00E+00	0.00E+00	0.00E+00
Fe^{+3}	0.00E+00	0.00E+00	0.00E+00	0.00E+00	0.00E+00	0.00E+00	0.00E+00	0.00E+00	0.00E+00
H_2O	0.00E+00	0.00E+00	0.00E+00	0.00E+00	5.55E-04	4.59E+02	4.59E+02	2.09E-01	2.42E+00
$H_2O(b)$	0.00E+00	0.00E+00	0.00E+00	0.00E+00	0.00E+00	0.00E+00	0.00E+00	0.00E+00	0.00E+00
H^+	0.00E+00	0.00E+00	0.00E+00	0.00E+00	0.00E+00	0.00E+00	0.00E+00	0.00E+00	0.00E+00
HCL	0.00E+00	0.00E+00	0.00E+00	0.00E+00	0.00E+00	0.00E+00	0.00E+00	0.00E+00	0.00E+00
HCO3-	0.00E+00	0.00E+00	0.00E+00	0.00E+00	0.00E+00	0.00E+00	0.00E+00	0.00E+00	0.00E+00
H2CO3	0.00E+00	0.00E+00	0.00E+00	0.00E+00	0.00E+00	0.00E+00	0.00E+00	0.00E+00	0.00E+00
HF	0.00E+00	0.00E+00	0.00E+00	0.00E+00	0.00E+00	0.00E+00	0.00E+00	0.00E+00	0.00E+00
Hg^{+2}	0.00E+00	0.00E+00	0.00E+00	0.00E+00	0.00E+00	0.00E+00	0.00E+00	0.00E+00	0.00E+00
HNO_3	0.00E+00	0.00E+00	0.00E+00	0.00E+00	0.00E+00	0.00E+00	0.00E+00	0.00E+00	0.00E+00
K^+	0.00E+00	0.00E+00	0.00E+00	0.00E+00	0.00E+00	0.00E+00	0.00E+00	0.00E+00	0.00E+00
La^{+3}	0.00E+00	0.00E+00	0.00E+00	0.00E+00	0.00E+00	0.00E+00	0.00E+00	0.00E+00	0.00E+00
Li^+	0.00E+00	0.00E+00	0.00E+00	0.00E+00	0.00E+00	0.00E+00	0.00E+00	0.00E+00	0.00E+00
Mg^{+2}	0.00E+00	0.00E+00	0.00E+00	0.00E+00	0.00E+00	0.00E+00	0.00E+00	0.00E+00	0.00E+00
Mn^{+3}	0.00E+00	0.00E+00	0.00E+00	0.00E+00	0.00E+00	0.00E+00	0.00E+00	0.00E+00	0.00E+00
MnO_4^-	0.00E+00	0.00E+00	0.00E+00	0.00E+00	0.00E+00	0.00E+00	0.00E+00	0.00E+00	0.00E+00
N_2	0.00E+00	0.00E+00	0.00E+00	0.00E+00	2.73E-02	3.52E+04	3.52E+04	1.60E+01	1.85E+02
Na^+	0.00E+00	0.00E+00	0.00E+00	0.00E+00	0.00E+00	0.00E+00	0.00E+00	0.00E+00	0.00E+00
NH3	0.00E+00	0.00E+00	0.00E+00	0.00E+00	0.00E+00	0.00E+00	0.00E+00	0.00E+00	0.00E+00
NH4+	0.00E+00	0.00E+00	0.00E+00	0.00E+00	0.00E+00	0.00E+00	0.00E+00	0.00E+00	0.00E+00
Ni^{+2}	0.00E+00	0.00E+00	0.00E+00	0.00E+00	0.00E+00	0.00E+00	0.00E+00	0.00E+00	0.00E+00
NO	0.00E+00	0.00E+00	0.00E+00	0.00E+00	0.00E+00	0.00E+00	0.00E+00	0.00E+00	0.00E+00
NO_2	0.00E+00	0.00E+00	0.00E+00	0.00E+00	0.00E+00	0.00E+00	0.00E+00	0.00E+00	0.00E+00
NO_2^-	0.00E+00	0.00E+00	0.00E+00	0.00E+00	0.00E+00	0.00E+00	0.00E+00	0.00E+00	0.00E+00
NO_3^-	0.00E+00	0.00E+00	0.00E+00	0.00E+00	0.00E+00	0.00E+00	0.00E+00	0.00E+00	0.00E+00
O_2	0.00E+00	0.00E+00	0.00E+00	0.00E+00	7.27E-03	1.07E+04	1.07E+04	4.85E+00	5.62E+01
O^-	0.00E+00	0.00E+00	0.00E+00	0.00E+00	0.00E+00	0.00E+00	0.00E+00	0.00E+00	0.00E+00
OH^-	0.00E+00	0.00E+00	0.00E+00	0.00E+00	0.00E+00	0.00E+00	0.00E+00	0.00E+00	0.00E+00
$OH(b)^-$	0.00E+00	0.00E+00	0.00E+00	0.00E+00	0.00E+00	0.00E+00	0.00E+00	0.00E+00	0.00E+00

CALCULATION SHEET

BY: E. Berrios
DATE: 12/22/05

PROJECT: WTP
JOB NO.: 24590
CALC NO.: 24590-WTP-M4C-FRP-00003
SHEET REV: D
SHEET NO.: C-31

SUBJECT: Integrated Baseline Emissions Report Non-SSFM Represented Constituents Emissions Rate Estimation

	A	B	C	D	E	F	G	H	I	J
74	Pb^{+2}	0.00E+00	0.00E+00	0.00E+00	0.00E+00	0.00E+00	0.00E+00	0.00E+00	0.00E+00	0.00E+00
75	Pd^{+2}	0.00E+00	0.00E+00	0.00E+00	0.00E+00	0.00E+00	0.00E+00	0.00E+00	0.00E+00	0.00E+00
76	PO_4^{-3}	0.00E+00	0.00E+00	0.00E+00	0.00E+00	0.00E+00	0.00E+00	0.00E+00	0.00E+00	0.00E+00
77	Resin	0.00E+00	0.00E+00	0.00E+00	0.00E+00	0.00E+00	0.00E+00	0.00E+00	0.00E+00	0.00E+00
78	Rh^{+3}	0.00E+00	0.00E+00	0.00E+00	0.00E+00	0.00E+00	0.00E+00	0.00E+00	0.00E+00	0.00E+00
79	Ru^{+3}	0.00E+00	0.00E+00	0.00E+00	0.00E+00	0.00E+00	0.00E+00	0.00E+00	0.00E+00	0.00E+00
80	S^{+6}	0.00E+00	0.00E+00	0.00E+00	0.00E+00	0.00E+00	0.00E+00	0.00E+00	0.00E+00	0.00E+00
81	SiO2	0.00E+00	0.00E+00	0.00E+00	0.00E+00	0.00E+00	0.00E+00	0.00E+00	0.00E+00	0.00E+00
82	SiO_4^{-4}	0.00E+00	0.00E+00	0.00E+00	0.00E+00	0.00E+00	0.00E+00	0.00E+00	0.00E+00	0.00E+00
83	SO_2	0.00E+00	0.00E+00	0.00E+00	0.00E+00	0.00E+00	0.00E+00	0.00E+00	0.00E+00	0.00E+00
84	SO_4^{-2}	0.00E+00	0.00E+00	0.00E+00	0.00E+00	0.00E+00	0.00E+00	0.00E+00	0.00E+00	0.00E+00
85	Sr^{+2}	0.00E+00	0.00E+00	0.00E+00	0.00E+00	0.00E+00	0.00E+00	0.00E+00	0.00E+00	0.00E+00
86	Sucrose	0.00E+00	0.00E+00	0.00E+00	0.00E+00	0.00E+00	0.00E+00	0.00E+00	0.00E+00	0.00E+00
87	Ti^{+4}	0.00E+00	0.00E+00	0.00E+00	0.00E+00	0.00E+00	0.00E+00	0.00E+00	0.00E+00	0.00E+00
88	Zn^{+2}	0.00E+00	0.00E+00	0.00E+00	0.00E+00	0.00E+00	0.00E+00	0.00E+00	0.00E+00	0.00E+00
89	Zr^{+4}	0.00E+00	0.00E+00	0.00E+00	0.00E+00	0.00E+00	0.00E+00	0.00E+00	0.00E+00	0.00E+00
90										
91	Components	Aqueous Comp			Solid Comp	Gaseous		Total Comp		
92	Unit	mol/L	Lb/gal	Lb/day	Lb/day	mol/L	Lb/day	Lb/day	Mt/day	g/sec
93	Total	0.00E+00	0.00E+00	0.00E+00	0.00E+00	0.00E+00	0.00E+00	0.00E+00	0.00E+00	0.00E+00
94	$C_2O_4^{-2}$	0.00E+00	0.00E+00	0.00E+00	0.00E+00	0.00E+00	0.00E+00	0.00E+00	0.00E+00	0.00E+00
95	Formate	0.00E+00	0.00E+00	0.00E+00	0.00E+00	0.00E+00	0.00E+00	0.00E+00	0.00E+00	0.00E+00
96	Acetate	0.00E+00	0.00E+00	0.00E+00	0.00E+00	0.00E+00	0.00E+00	0.00E+00	0.00E+00	0.00E+00
97	Glycolate	0.00E+00	0.00E+00	0.00E+00	0.00E+00	0.00E+00	0.00E+00	0.00E+00	0.00E+00	0.00E+00
98	IDA	0.00E+00	0.00E+00	0.00E+00	0.00E+00	0.00E+00	0.00E+00	0.00E+00	0.00E+00	0.00E+00
99	Citrate	0.00E+00	0.00E+00	0.00E+00	0.00E+00	0.00E+00	0.00E+00	0.00E+00	0.00E+00	0.00E+00
100	HEDTA	0.00E+00	0.00E+00	0.00E+00	0.00E+00	0.00E+00	0.00E+00	0.00E+00	0.00E+00	0.00E+00
101	EDTA	0.00E+00	0.00E+00	0.00E+00	0.00E+00	0.00E+00	0.00E+00	0.00E+00	0.00E+00	0.00E+00
102										
103	Rad. Comp	Aqueous Rad. Comp			Solids Rad. Comp (1)			Total Rad. Comp (1)		
104	Unit	Ci/L	Ci/day	Lb/day	Ci/L	Ci/day	Lb/day	Ci/L	Ci/day	Lb/day
105	Total	0.00E+00	0.00E+00	0.00E+00	0.00E+00	0.00E+00	0.00E+00	0.00E+00	0.00E+00	0.00E+00
106	^{241}Am	0.00E+00	0.00E+00	0.00E+00	0.00E+00	0.00E+00	0.00E+00	0.00E+00	0.00E+00	0.00E+00
107	^{243}Am	0.00E+00	0.00E+00	0.00E+00	0.00E+00	0.00E+00	0.00E+00	0.00E+00	0.00E+00	0.00E+00
108	^{14}C	0.00E+00	0.00E+00	0.00E+00	0.00E+00	0.00E+00	0.00E+00	0.00E+00	0.00E+00	0.00E+00
109	^{60}Co	0.00E+00	0.00E+00	0.00E+00	0.00E+00	0.00E+00	0.00E+00	0.00E+00	0.00E+00	0.00E+00
110	^{243}Cm	0.00E+00	0.00E+00	0.00E+00	0.00E+00	0.00E+00	0.00E+00	0.00E+00	0.00E+00	0.00E+00
111	^{244}Cm	0.00E+00	0.00E+00	0.00E+00	0.00E+00	0.00E+00	0.00E+00	0.00E+00	0.00E+00	0.00E+00
112	^{137}Cs	0.00E+00	0.00E+00	0.00E+00	0.00E+00	0.00E+00	0.00E+00	0.00E+00	0.00E+00	0.00E+00
113	^{152}Eu	0.00E+00	0.00E+00	0.00E+00	0.00E+00	0.00E+00	0.00E+00	0.00E+00	0.00E+00	0.00E+00
114	^{154}Eu	0.00E+00	0.00E+00	0.00E+00	0.00E+00	0.00E+00	0.00E+00	0.00E+00	0.00E+00	0.00E+00
115	^{155}Eu	0.00E+00	0.00E+00	0.00E+00	0.00E+00	0.00E+00	0.00E+00	0.00E+00	0.00E+00	0.00E+00
116	^{3}H	0.00E+00	0.00E+00	0.00E+00	0.00E+00	0.00E+00	0.00E+00	0.00E+00	0.00E+00	0.00E+00
117	^{129}I	0.00E+00	0.00E+00	0.00E+00	0.00E+00	0.00E+00	0.00E+00	0.00E+00	0.00E+00	0.00E+00
118	^{63}Ni	0.00E+00	0.00E+00	0.00E+00	0.00E+00	0.00E+00	0.00E+00	0.00E+00	0.00E+00	0.00E+00
119	^{237}Np	0.00E+00	0.00E+00	0.00E+00	0.00E+00	0.00E+00	0.00E+00	0.00E+00	0.00E+00	0.00E+00
120	^{238}Pu	0.00E+00	0.00E+00	0.00E+00	0.00E+00	0.00E+00	0.00E+00	0.00E+00	0.00E+00	0.00E+00
121	^{239}Pu	0.00E+00	0.00E+00	0.00E+00	0.00E+00	0.00E+00	0.00E+00	0.00E+00	0.00E+00	0.00E+00
122	^{240}Pu	0.00E+00	0.00E+00	0.00E+00	0.00E+00	0.00E+00	0.00E+00	0.00E+00	0.00E+00	0.00E+00
123	^{241}Pu	0.00E+00	0.00E+00	0.00E+00	0.00E+00	0.00E+00	0.00E+00	0.00E+00	0.00E+00	0.00E+00
124	^{242}Pu	0.00E+00	0.00E+00	0.00E+00	0.00E+00	0.00E+00	0.00E+00	0.00E+00	0.00E+00	0.00E+00
125	^{125}Sb	0.00E+00	0.00E+00	0.00E+00	0.00E+00	0.00E+00	0.00E+00	0.00E+00	0.00E+00	0.00E+00
126	^{151}Sm	0.00E+00	0.00E+00	0.00E+00	0.00E+00	0.00E+00	0.00E+00	0.00E+00	0.00E+00	0.00E+00
127	^{126}Sn	0.00E+00	0.00E+00	0.00E+00	0.00E+00	0.00E+00	0.00E+00	0.00E+00	0.00E+00	0.00E+00
128	^{90}Sr	0.00E+00	0.00E+00	0.00E+00	0.00E+00	0.00E+00	0.00E+00	0.00E+00	0.00E+00	0.00E+00
129	^{99}Tc	0.00E+00	0.00E+00	0.00E+00	0.00E+00	0.00E+00	0.00E+00	0.00E+00	0.00E+00	0.00E+00
130	^{232}Th	0.00E+00	0.00E+00	0.00E+00	0.00E+00	0.00E+00	0.00E+00	0.00E+00	0.00E+00	0.00E+00
131	^{233}U	0.00E+00	0.00E+00	0.00E+00	0.00E+00	0.00E+00	0.00E+00	0.00E+00	0.00E+00	0.00E+00
132	^{234}U	0.00E+00	0.00E+00	0.00E+00	0.00E+00	0.00E+00	0.00E+00	0.00E+00	0.00E+00	0.00E+00
133	^{235}U	0.00E+00	0.00E+00	0.00E+00	0.00E+00	0.00E+00	0.00E+00	0.00E+00	0.00E+00	0.00E+00
134	^{236}U	0.00E+00	0.00E+00	0.00E+00	0.00E+00	0.00E+00	0.00E+00	0.00E+00	0.00E+00	0.00E+00
135	^{238}U	0.00E+00	0.00E+00	0.00E+00	0.00E+00	0.00E+00	0.00E+00	0.00E+00	0.00E+00	0.00E+00
136	(1) All radionuclides in gaseous streams are assumed to exist as solid particulate.									

Table C-16 LVP18 Stream Report

3	Stream Number:	LVP18
4	Stream Name:	Caustic scrubber offgas discharge to stack
5	Configuration:	MRQ-05-0049.acmf
6	Run Date / Time:	12/14/2005 - 1:42:25 PM
7	Run Data File:	H:\ACM v3.1\MRQ-05-0049\MRQ_05_0049A_Streams.csv

	Variable	Value	Units	
10	Density	1.02E-03	g/cm^3	(does not include solid phase)
11	Enthalpy	-1.40E+07	BTU/hr	
12	Mass Flow	1.83E+04	Lb/hr	
13		4.40E+05	Lb/day	
14	Volumetric Flow	3.59E+04	GPM	(does not include solid phase)
15		4.79E+03	ft^3/min	(does not include solid phase)
16	Molar Flow	6.70E+02	Lbmol/hr	
17	Molecular Weight	2.74E+01	Lb/Lbmol	
18	Pressure	1.02E+03	mbar	
19	Temperature	5.72E+01	C	
20	Na Molarity	0.00E+00	mol/L	
21	pH	-2.41E+00	pH	
22	Total TRU	1.54E-17	Ci/L	
23	Total Activity	2.24E-09	Ci/L	

24	Component	Aqueous Comp			Solid Comp	Gaseous (1)		Total Comp		
25	Unit	mol/L	Lb/gal	Lb/day	Lb/day	mol/L	Lb/day	Lb/day	mt/day	g/sec
26	Total	1.68E-14	4.74E-15	1.27E-07	3.71E+00	3.73E-02	4.40E+05	4.40E+05	2.00E+02	2.31E+03
27	Ag^+	1.45E-21	1.31E-21	6.75E-14	8.62E-10	0.00E+00	0.00E+00	8.62E-10	3.92E-13	4.54E-12
28	Al^{+3}	1.76E-17	3.96E-18	2.05E-10	4.13E-07	0.00E+00	0.00E+00	4.13E-07	1.88E-10	2.17E-09
29	As^{+3}	6.40E-21	4.00E-21	2.07E-13	1.43E-08	0.00E+00	0.00E+00	1.43E-08	6.51E-12	7.53E-11
30	B^{+3}	7.05E-17	6.36E-18	3.28E-10	3.19E-06	0.00E+00	0.00E+00	3.19E-06	1.45E-09	1.68E-08
31	Ba^{+2}	1.33E-21	1.53E-21	7.90E-14	2.46E-11	0.00E+00	0.00E+00	2.47E-11	1.12E-14	1.30E-13
32	Bi^{+3}	1.58E-21	2.75E-21	1.42E-13	7.69E-10	0.00E+00	0.00E+00	7.69E-10	3.50E-13	4.05E-12
33	Ca^{+2}	2.34E-19	7.83E-20	4.04E-12	9.78E-07	0.00E+00	0.00E+00	9.78E-07	4.44E-10	5.14E-09
34	Cd^{+2}	2.48E-21	2.33E-21	1.20E-13	4.12E-09	0.00E+00	0.00E+00	4.12E-09	1.87E-12	2.17E-11
35	Ce^{+3}	5.93E-20	6.93E-20	3.58E-12	9.09E-11	0.00E+00	0.00E+00	9.45E-11	4.29E-14	4.97E-13
36	Cl^-	3.57E-18	1.06E-18	5.46E-11	7.97E-14	0.00E+00	0.00E+00	5.47E-11	2.48E-14	2.88E-13
37	CO	0.00E+00	0.00E+00	0.00E+00	0.00E+00	3.89E-07	4.70E+00	4.70E+00	2.13E-03	2.47E-02
38	CO_2	5.77E-17	2.12E-17	1.09E-09	0.00E+00	7.85E-04	1.49E+04	1.49E+04	6.76E+00	7.83E+01
39	CO_3^{-2}	1.42E-17	7.12E-18	3.68E-10	3.87E-10	0.00E+00	0.00E+00	7.54E-10	3.43E-13	3.97E-12
40	Cr^{+3}	4.28E-19	1.85E-19	9.54E-12	1.95E-07	0.00E+00	0.00E+00	1.95E-07	8.86E-11	1.03E-09
41	Cu^{+2}	2.45E-21	1.30E-21	6.72E-14	1.29E-10	0.00E+00	0.00E+00	1.29E-10	5.88E-14	6.81E-13
42	F^-	1.70E-18	2.69E-19	1.39E-11	1.22E-15	0.00E+00	0.00E+00	1.39E-11	6.31E-15	7.30E-14
43	Fe^{+3}	7.76E-20	3.62E-20	1.87E-12	2.59E-07	0.00E+00	0.00E+00	2.59E-07	1.18E-10	1.36E-09
44	H_2O	0.00E+00	0.00E+00	0.00E+00	0.00E+00	6.37E-03	4.94E+04	4.94E+04	2.25E+01	2.60E+02
45	$H_2O(b)$	0.00E+00	0.00E+00	0.00E+00	0.00E+00	0.00E+00	0.00E+00	0.00E+00	0.00E+00	0.00E+00
46	H^+	8.08E-30	6.80E-32	3.51E-24	0.00E+00	0.00E+00	0.00E+00	3.51E-24	1.60E-27	1.85E-26
47	HCL	0.00E+00	0.00E+00	0.00E+00	0.00E+00	2.44E-07	3.83E+00	3.83E+00	1.74E-03	2.02E-02
48	HCO3-	7.93E-41	4.04E-41	2.09E-33	3.16E-23	0.00E+00	0.00E+00	3.16E-23	1.44E-26	1.66E-25
49	H2CO3	0.00E+00	0.00E+00	0.00E+00	0.00E+00	0.00E+00	0.00E+00	0.00E+00	0.00E+00	0.00E+00
50	HF	0.00E+00	0.00E+00	0.00E+00	0.00E+00	3.22E-08	2.77E-01	2.77E-01	1.26E-04	1.46E-03
51	Hg^{+2}	5.14E-18	8.60E-18	4.44E-10	1.48E-02	0.00E+00	0.00E+00	1.48E-02	6.72E-06	7.77E-05
52	HNO_3	0.00E+00	0.00E+00	0.00E+00	0.00E+00	0.00E+00	0.00E+00	0.00E+00	0.00E+00	0.00E+00
53	K^+	6.49E-18	2.12E-18	1.09E-10	1.76E-06	0.00E+00	0.00E+00	1.76E-06	8.02E-10	9.28E-09
54	La^{+3}	6.81E-22	7.89E-22	4.07E-14	9.94E-13	0.00E+00	0.00E+00	1.03E-12	4.70E-16	5.44E-15
55	Li^+	3.68E-19	2.13E-20	1.10E-12	5.34E-07	0.00E+00	0.00E+00	5.34E-07	2.43E-10	2.81E-09
56	Mg^{+2}	2.02E-20	4.10E-21	2.12E-13	8.21E-07	0.00E+00	0.00E+00	8.21E-07	3.73E-10	4.32E-09
57	Mn^{+3}	2.19E-20	1.01E-20	5.20E-13	3.67E-09	0.00E+00	0.00E+00	3.67E-09	1.67E-12	1.93E-11
58	MnO_4^-	0.00E+00	0.00E+00	0.00E+00	0.00E+00	0.00E+00	0.00E+00	0.00E+00	0.00E+00	0.00E+00
59	N_2	8.70E-35	2.03E-35	1.05E-27	0.00E+00	2.35E-02	2.84E+05	2.84E+05	1.29E+02	1.49E+03
60	Na^+	1.95E-16	3.75E-17	1.94E-09	8.24E-06	0.00E+00	0.00E+00	8.24E-06	3.74E-09	4.33E-08
61	NH3	1.60E-14	2.28E-15	1.18E-07	0.00E+00	2.70E-06	1.98E+01	1.98E+01	8.99E-03	1.04E-01
62	NH4+	3.84E-18	2.28E-15	2.99E-11	1.44E-18	0.00E+00	0.00E+00	2.99E-11	1.36E-14	1.57E-13
63	Ni^{+2}	3.56E-20	1.74E-20	6.98E-13	1.25E-08	0.00E+00	0.00E+00	1.25E-08	5.69E-12	6.59E-11
64	NO	0.00E+00	0.00E+00	0.00E+00	0.00E+00	1.73E-05	2.23E+02	2.23E+02	1.01E-01	1.17E+00
65	NO_2	0.00E+00	0.00E+00	0.00E+00	0.00E+00	1.58E-06	3.12E+01	3.12E+01	1.42E-02	1.64E-01
66	NO_2^-	3.82E-17	1.47E-17	7.58E-10	3.41E-15	0.00E+00	0.00E+00	7.58E-10	3.45E-13	3.99E-12
67	NO_3^-	6.99E-17	3.61E-17	1.87E-09	2.62E-15	0.00E+00	0.00E+00	1.87E-09	8.49E-13	9.82E-12
68	O_2	4.61E-37	1.23E-37	6.36E-30	0.00E+00	6.65E-03	9.17E+04	9.17E+04	4.17E+01	4.82E+02
69	O^{--}	0.00E+00	0.00E+00	0.00E+00	2.22E+00	0.00E+00	0.00E+00	2.22E+00	1.01E-03	1.17E-02
70	OH^-	3.88E-17	5.50E-18	2.84E-10	1.04E-14	0.00E+00	0.00E+00	2.84E-10	1.29E-13	1.49E-12
71	$OH(b)^-$	2.81E-16	3.99E-17	2.06E-09	0.00E+00	0.00E+00	0.00E+00	2.06E-09	9.38E-13	1.09E-11

CALCULATION SHEET

BY: E. Berrios
DATE: 12/22/05

PROJECT: WTP
JOB NO.: 24590
CALC NO.: 24590-WTP-M4C-FRP-00003
SHEET REV: D
SHEET NO.: C-33

SUBJECT: Integrated Baseline Emissions Report Non-SSFM Represented Constituents Emissions Rate Estimation

	A	B	C	D	E	F	G	H	I	J
74	Pb^{+2}	9.01E-21	1.56E-20	8.04E-13	4.02E-09	0.00E+00	0.00E+00	4.02E-09	1.83E-12	2.12E-11
75	Pd^{+2}	6.97E-22	6.19E-22	3.20E-14	1.19E-12	0.00E+00	0.00E+00	1.22E-12	5.56E-16	6.44E-15
76	PO_4^{-3}	7.19E-19	5.70E-19	2.94E-11	8.26E-07	0.00E+00	0.00E+00	8.26E-07	3.76E-10	4.35E-09
77	Resin	0.00E+00	0.00E+00	0.00E+00	0.00E+00	0.00E+00	0.00E+00	0.00E+00	0.00E+00	0.00E+00
78	Rh^{+3}	6.74E-22	5.79E-22	2.99E-14	1.21E-11	0.00E+00	0.00E+00	1.21E-11	5.52E-15	6.39E-14
79	Ru^{+3}	1.00E-21	8.45E-22	4.37E-14	3.41E-08	0.00E+00	0.00E+00	3.41E-08	1.55E-11	1.79E-10
80	S^{-2}	0.00E+00	0.00E+00	0.00E+00	1.48E+00	0.00E+00	0.00E+00	1.48E+00	6.73E-04	7.79E-03
81	SiO2	1.36E-19	6.80E-20	3.51E-12	2.58E-06	0.00E+00	0.00E+00	2.58E-06	1.17E-09	1.36E-08
82	SiO_4^{-4}	1.04E-31	7.97E-32	4.12E-24	1.39E-21	0.00E+00	0.00E+00	1.39E-21	6.32E-25	7.31E-24
83	SO_2	0.00E+00	0.00E+00	0.00E+00	0.00E+00	1.61E-08	4.44E-01	4.44E-01	2.02E-04	2.34E-03
84	SO_4^{-2}	1.72E-18	1.38E-18	7.11E-11	1.33E-12	0.00E+00	0.00E+00	7.24E-11	3.29E-14	3.81E-13
85	Sr^{+2}	3.66E-22	2.67E-22	1.38E-14	1.05E-11	0.00E+00	0.00E+00	1.05E-11	4.79E-15	5.54E-14
86	Sucrose	0.00E+00	0.00E+00	0.00E+00	0.00E+00	0.00E+00	0.00E+00	0.00E+00	0.00E+00	0.00E+00
87	Ti^{+4}	1.12E-21	4.47E-22	2.31E-14	2.87E-10	0.00E+00	0.00E+00	2.87E-10	1.31E-13	1.51E-12
88	Zn^{+2}	4.18E-21	2.28E-21	1.18E-13	6.95E-07	0.00E+00	0.00E+00	6.95E-07	3.16E-10	3.65E-09
89	Zr^{+4}	3.09E-21	2.35E-21	1.21E-13	2.49E-07	0.00E+00	0.00E+00	2.49E-07	1.13E-10	1.31E-09
90										
91	Components	Aqueous Compi			Solid Comp	Gaseous		Total Comp		
92	Unit	mol/L	Lb/gal	Lb/day	Lb/day	mol/L	Lb/day	Lb/day	Mt/day	g/sec
93	Total	3.24E-20	2.38E-20	1.23E-12	6.07E-07	0.00E+00	0.00E+00	6.07E-07	2.76E-10	3.19E-09
94	$C_2O_4^{-2}$	3.24E-20	2.38E-20	1.23E-12	6.07E-07	0.00E+00	0.00E+00	6.07E-07	2.76E-10	3.19E-09
95	Formate	4.08E-27	1.53E-27	7.91E-20	2.40E-12	0.00E+00	0.00E+00	2.40E-12	1.09E-15	1.26E-14
96	Acetate	3.16E-27	1.56E-27	8.04E-20	2.44E-12	0.00E+00	0.00E+00	2.44E-12	1.11E-15	1.28E-14
97	Glycolate	2.10E-26	1.32E-26	6.80E-19	2.06E-11	0.00E+00	0.00E+00	2.06E-11	9.37E-15	1.08E-13
98	IDA	1.11E-26	1.24E-26	6.39E-19	1.94E-11	0.00E+00	0.00E+00	1.94E-11	8.81E-15	1.02E-13
99	Citrate	1.02E-27	1.63E-27	8.44E-20	2.56E-12	0.00E+00	0.00E+00	2.56E-12	1.16E-15	1.34E-14
100	HEDTA	9.54E-26	2.22E-25	1.14E-17	3.47E-10	0.00E+00	0.00E+00	3.47E-10	1.58E-13	1.82E-12
101	EDTA	1.15E-26	2.80E-26	1.44E-18	4.38E-11	0.00E+00	0.00E+00	4.38E-11	1.99E-14	2.30E-13
102										
103	Rad. Comp	Aqueous Rad. Comp			Solids Rad. Comp (1)			Total Rad. Comp (1)		
104	Unit	Ci/L	Ci/day	Lb/day	Ci/L	Ci/day	Lb/day	Ci/L	Ci/day	Lb/day
105	Total	1.01E-16	1.98E-08	5.32E-11	2.24E-09	4.39E-01	1.30E-03	2.24E-09	4.39E-01	1.30E-03
106	^{241}Am	1.37E-20	2.67E-12	1.72E-15	1.32E-17	2.58E-09	1.66E-12	1.32E-17	2.58E-09	1.66E-12
107	^{243}Am	8.94E-24	1.75E-15	1.93E-17	8.58E-21	1.68E-12	1.85E-14	8.58E-21	1.68E-12	1.85E-14
108	^{14}C	5.58E-17	1.09E-08	5.39E-12	1.86E-09	3.64E-01	1.80E-04	1.86E-09	3.64E-01	1.80E-04
109	^{60}Co	1.83E-21	3.58E-13	6.98E-19	4.82E-18	9.41E-10	1.83E-15	4.82E-18	9.42E-10	1.84E-15
110	^{243}Cm	1.47E-24	2.88E-16	1.26E-20	6.01E-22	1.18E-13	5.13E-18	6.03E-22	1.18E-13	5.14E-18
111	^{244}Cm	3.49E-23	6.82E-15	1.86E-19	1.42E-20	2.77E-12	7.56E-17	1.42E-20	2.78E-12	7.58E-17
112	^{137}Cs	2.96E-21	5.78E-13	1.47E-17	2.12E-15	4.14E-07	1.05E-11	2.12E-15	4.14E-07	1.05E-11
113	^{152}Eu	1.03E-22	2.01E-14	2.55E-19	3.93E-20	7.69E-12	9.75E-17	3.94E-20	7.71E-12	9.78E-17
114	^{154}Eu	2.13E-20	4.17E-12	3.40E-17	8.14E-18	1.59E-09	1.30E-14	8.16E-18	1.59E-09	1.30E-14
115	^{155}Eu	6.17E-21	1.21E-12	5.47E-18	2.35E-18	4.60E-10	2.09E-15	2.36E-18	4.61E-10	2.09E-15
116	^{3}H	4.06E-17	7.93E-09	1.82E-15	3.82E-10	7.47E-02	1.71E-08	3.82E-10	7.47E-02	1.71E-08
117	^{129}I	1.55E-20	3.02E-12	3.77E-11	4.60E-13	8.99E-05	1.12E-03	4.60E-13	8.99E-05	1.12E-03
118	^{63}Ni	3.30E-20	6.46E-12	2.51E-16	1.56E-16	3.06E-08	1.19E-12	1.56E-16	3.06E-08	1.19E-12
119	^{237}Np	1.08E-23	2.11E-15	6.61E-15	4.14E-21	8.10E-13	2.53E-12	4.15E-21	8.12E-13	2.54E-12
120	^{238}Pu	6.12E-23	1.20E-14	1.54E-16	2.34E-20	4.58E-12	5.89E-16	2.35E-20	4.59E-12	5.91E-16
121	^{239}Pu	8.46E-22	1.65E-13	5.88E-15	3.23E-19	6.32E-11	2.24E-12	3.24E-19	6.33E-11	2.25E-12
122	^{240}Pu	2.19E-22	4.29E-14	4.16E-16	8.38E-20	1.64E-11	1.59E-13	8.40E-20	1.64E-11	1.59E-13
123	^{241}Pu	4.60E-21	9.00E-13	1.93E-17	1.76E-18	3.44E-10	7.36E-15	1.76E-18	3.45E-10	7.38E-15
124	^{242}Pu	2.32E-26	4.54E-18	2.54E-18	8.88E-24	1.73E-15	9.70E-16	8.89E-24	1.74E-15	9.73E-16
125	^{125}Sb	1.27E-20	2.49E-12	5.28E-18	1.21E-16	2.37E-08	5.03E-14	1.21E-16	2.37E-08	5.03E-14
126	^{151}Sm	1.79E-19	3.49E-11	2.93E-15	1.19E-18	2.34E-10	1.96E-14	1.37E-18	2.69E-10	2.25E-14
127	^{126}Sn	2.02E-22	3.96E-14	7.68E-15	7.71E-20	1.51E-11	2.93E-12	7.73E-20	1.51E-11	2.93E-12
128	^{90}Sr	4.44E-18	8.68E-10	1.39E-14	3.38E-15	6.61E-07	1.06E-11	3.39E-15	6.62E-07	1.06E-11
129	^{99}Tc	3.51E-20	6.87E-12	8.94E-13	8.81E-15	1.72E-06	2.24E-07	8.81E-15	1.72E-06	2.24E-07
130	^{232}Th	3.29E-25	6.42E-17	1.29E-12	1.50E-23	2.93E-15	5.87E-11	1.53E-23	3.00E-15	6.00E-11
131	^{233}U	1.10E-23	2.14E-15	4.90E-16	4.23E-21	8.27E-13	1.89E-13	4.24E-21	8.30E-13	1.90E-13
132	^{234}U	7.77E-24	1.52E-15	5.40E-16	2.96E-21	5.79E-13	2.06E-13	2.97E-21	5.81E-13	2.06E-13
133	^{235}U	3.06E-25	5.99E-17	6.11E-14	1.17E-22	2.28E-14	2.33E-11	1.17E-22	2.29E-14	2.33E-11
134	^{236}U	5.25E-25	1.03E-16	3.50E-15	2.00E-22	3.91E-14	1.33E-12	2.00E-22	3.92E-14	1.34E-12
135	^{238}U	6.07E-24	1.19E-15	7.79E-12	2.31E-21	4.52E-13	2.97E-09	2.32E-21	4.53E-13	2.97E-09
136	(1) All radionuclides in gaseous streams are assumed to exist as solid particulate.									

CALCULATION SHEET

BY: E. Berrios
DATE: 12/22/05

PROJECT: WTP
JOB NO.: 24590
CALC NO.: 24590-WTP-M4C-FRP-00003
SHEET REV: D
SHEET NO.: C-34

SUBJECT: Integrated Baseline Emissions Report Non-SSFM Represented Constituents Emissions Rate Estimation

	A	B	C	D	E	F	G	H	I	J
1	**Table C-17 PJV11 Stream Report**									
3	**Stream Number:**		PJV11							
4	**Stream Name:**		HEPA discharge							
5	**Configuration:**		MRQ-05-0049.acmf							
6	**Run Date / Time:**		12/14/2005 - 1:42:25 PM							
7	**Run Data File:**		H:\ACM v3.1\MRQ-05-0049\MRQ_05_0049A_Streams.csv							
8										
9	**Stream Properties**									
10	**Variable**	**Value**	**Units**							
11	Density	1.07E-03	g/cm^3	(does not include solid phase)						
12	Enthalpy	-9.30E+06	BTU/hr							
13	Mass Flow	1.85E+05	Lb/hr							
14		4.44E+06	Lb/day							
15	Volumetric Flow	3.44E+05	GPM	(does not include solid phase)						
16		4.59E+04	ft^3/min	(does not include solid phase)						
17	Molar Flow	6.44E+03	Lbmol/hr							
18	Molecular Weight	2.87E+01	Lb/Lbmol							
19	Pressure	9.33E+02	mbar							
20	Temperature	2.64E+01	C							
21	Na Molarity	0.00E+00	mol/L							
22	pH	1.15E+01	pH							
23	Total TRU	2.20E-18	Ci/L							
24	Total Activity	5.70E-15	Ci/L							
25										
26	**Component**	**Aqueous Comp**			**Solid Comp**	**Gaseous (1)**		**Total Comp**		
27	**Unit**	**mol/L**	**Lb/gal**	**Lb/day**	**Lb/day**	**mol/L**	**Lb/day**	**Lb/day**	**mt/day**	**g/sec**
28	**Total**	4.56E-09	6.84E-10	3.39E-01	2.90E-05	3.74E-02	4.44E+06	4.44E+06	2.02E+03	2.34E+04
29	Ag^{+}	1.60E-21	1.44E-21	7.13E-13	1.30E-11	0.00E+00	0.00E+00	1.37E-11	6.21E-15	7.19E-14
30	Al^{+3}	1.94E-17	4.36E-18	2.16E-09	1.79E-09	0.00E+00	0.00E+00	3.95E-09	1.80E-12	2.08E-11
31	As^{+3}	7.05E-21	4.41E-21	2.18E-12	9.12E-13	0.00E+00	0.00E+00	3.09E-12	1.41E-15	1.63E-14
32	B^{+3}	1.17E-19	1.06E-20	5.23E-12	8.60E-11	0.00E+00	0.00E+00	9.12E-11	4.14E-14	4.80E-13
33	Ba^{+2}	1.47E-21	1.69E-21	8.34E-13	1.15E-11	0.00E+00	0.00E+00	1.24E-11	5.63E-15	6.51E-14
34	Bi^{+3}	1.73E-21	3.03E-21	1.50E-12	6.05E-11	0.00E+00	0.00E+00	6.20E-11	2.82E-14	3.26E-13
35	Ca^{+2}	1.23E-19	4.11E-20	2.03E-11	7.75E-11	0.00E+00	0.00E+00	9.78E-11	4.45E-14	5.15E-13
36	Cd^{+2}	2.73E-21	2.56E-21	1.27E-12	4.69E-11	0.00E+00	0.00E+00	4.82E-11	2.19E-14	2.53E-13
37	Ce^{+3}	5.83E-20	6.81E-20	3.37E-11	1.44E-11	0.00E+00	0.00E+00	4.81E-11	2.19E-14	2.53E-13
38	Cl^{-}	3.27E-18	9.87E-19	4.79E-10	1.40E-11	0.00E+00	0.00E+00	4.92E-10	2.24E-13	2.59E-12
39	CO	9.50E-112	2.22E-112	1.10E-103	0.00E+00	0.00E+00	0.00E+00	1.10E-103	4.99E-107	5.78E-106
40	CO_2	1.17E-16	4.31E-17	2.13E-08	0.00E+00	3.62E-16	6.58E-08	8.71E-08	3.96E-11	4.58E-10
41	CO_3^{-2}	1.55E-17	7.77E-18	3.84E-09	1.57E-09	0.00E+00	0.00E+00	5.42E-09	2.46E-12	2.85E-11
42	Cr^{+3}	4.68E-19	2.03E-19	1.01E-10	3.65E-11	0.00E+00	0.00E+00	1.37E-10	6.23E-14	7.21E-13
43	Cu^{+2}	2.70E-21	1.43E-21	7.10E-13	4.89E-12	0.00E+00	0.00E+00	5.60E-12	2.55E-15	2.95E-14
44	F^{-}	1.54E-18	2.44E-19	1.21E-10	2.54E-10	0.00E+00	0.00E+00	3.75E-10	1.71E-13	1.97E-12
45	Fe^{+3}	8.38E-20	3.91E-20	1.93E-11	1.84E-09	0.00E+00	0.00E+00	1.86E-09	8.45E-13	9.78E-12
46	H_2O	4.55E-09	6.84E-10	3.39E-01	0.00E+00	5.26E-04	3.91E+04	3.91E+04	1.78E+01	2.06E+02
47	$H_2O(b)$	0.00E+00	0.00E+00	0.00E+00	0.00E+00	0.00E+00	0.00E+00	0.00E+00	0.00E+00	0.00E+00
48	H^{+}	3.27E-12	2.75E-14	1.36E-05	0.00E+00	0.00E+00	0.00E+00	1.36E-05	6.19E-09	7.17E-08
49	HCL	0.00E+00	0.00E+00	0.00E+00	0.00E+00	0.00E+00	0.00E+00	0.00E+00	0.00E+00	0.00E+00
50	HCO3-	1.61E-21	8.20E-22	4.06E-13	9.36E-28	0.00E+00	0.00E+00	4.06E-13	1.84E-16	2.14E-15
51	H2CO3	0.00E+00	0.00E+00	0.00E+00	0.00E+00	0.00E+00	0.00E+00	0.00E+00	0.00E+00	0.00E+00
52	HF	0.00E+00	0.00E+00	0.00E+00	0.00E+00	0.00E+00	0.00E+00	0.00E+00	0.00E+00	0.00E+00
53	Hg^{+2}	2.83E-15	4.74E-15	2.35E-06	2.90E-05	0.00E+00	0.00E+00	3.14E-05	1.43E-08	1.65E-07
54	HNO_3	0.00E+00	0.00E+00	0.00E+00	0.00E+00	0.00E+00	0.00E+00	0.00E+00	0.00E+00	0.00E+00
55	K^{+}	6.72E-18	2.19E-18	1.08E-09	3.59E-11	0.00E+00	0.00E+00	1.12E-09	5.09E-13	5.89E-12
56	La^{+3}	7.50E-22	6.70E-22	4.30E-13	2.17E-11	0.00E+00	0.00E+00	2.21E-11	1.00E-14	1.16E-13
57	Li^{+}	1.01E-19	5.88E-21	2.91E-12	5.37E-12	0.00E+00	0.00E+00	8.28E-12	3.76E-15	4.36E-14
58	Mg^{+2}	2.23E-20	4.52E-21	2.24E-12	1.60E-11	0.00E+00	0.00E+00	1.82E-11	8.28E-15	9.58E-14
59	Mn^{+3}	2.42E-20	1.11E-20	5.49E-12	1.69E-10	0.00E+00	0.00E+00	1.75E-10	7.93E-14	9.18E-13
60	MnO_4^{-}	0.00E+00	0.00E+00	0.00E+00	0.00E+00	0.00E+00	0.00E+00	0.00E+00	0.00E+00	0.00E+00
61	N_2	4.77E-14	1.11E-14	5.51E-06	0.00E+00	2.92E-02	3.37E+06	3.37E+06	1.53E+03	1.78E+04
62	Na^{+}	2.12E-16	4.06E-17	2.01E-08	2.83E-09	0.00E+00	0.00E+00	2.29E-08	1.04E-11	1.21E-10
63	NH3	1.44E-13	2.05E-14	1.01E-05	0.00E+00	0.00E+00	0.00E+00	1.01E-05	4.61E-09	5.34E-08
64	NH4+	1.07E-14	2.05E-14	8.01E-07	4.12E-23	0.00E+00	0.00E+00	8.01E-07	3.64E-10	4.21E-09
65	Ni^{+2}	3.88E-20	1.90E-20	9.41E-12	7.54E-11	0.00E+00	0.00E+00	8.48E-11	3.86E-14	4.46E-13
66	NO	5.74E-37	1.44E-37	7.11E-29	0.00E+00	0.00E+00	0.00E+00	7.11E-29	3.23E-32	3.74E-31
67	NO_2	8.42E-50	3.23E-50	1.60E-41	0.00E+00	0.00E+00	0.00E+00	1.60E-41	7.27E-45	8.42E-44
68	NO_2^{-}	4.21E-17	1.62E-17	8.00E-09	7.09E-10	0.00E+00	0.00E+00	8.71E-09	3.96E-12	4.58E-11

CALCULATION SHEET

BY: E. Berrios
DATE: 12/22/05

PROJECT: WTP
JOB NO.: 24590
CALC NO.: 24590-WTP-M4C-FRP-00003
SHEET REV: D
SHEET NO.: C-35

SUBJECT: Integrated Baseline Emissions Report Non-SSFM Represented Constituents Emissions Rate Estimation

	A	B	C	D	E	F	G	H	I	J
69	NO_3^-	7.40E-17	3.83E-17	1.90E-08	5.47E-10	0.00E+00	0.00E+00	1.95E-08	8.87E-12	1.03E-10
70	O_2	1.54E-14	4.11E-15	2.03E-06	0.00E+00	7.75E-03	1.02E+06	1.02E+06	4.66E+02	5.39E+03
71	O^-	0.00E+00	0.00E+00	0.00E+00	2.62E-10	0.00E+00	0.00E+00	2.62E-10	1.19E-13	1.38E-12
72	OH^-	1.24E-16	1.75E-17	8.68E-09	6.48E-09	0.00E+00	0.00E+00	1.52E-08	6.89E-12	7.97E-11
73	$OH(b)^-$	1.87E-25	2.65E-26	1.31E-17	6.92E-31	0.00E+00	0.00E+00	1.31E-17	5.96E-21	6.90E-20
74	Pb^{+2}	9.92E-21	1.71E-20	8.49E-12	9.90E-11	0.00E+00	0.00E+00	1.07E-10	4.88E-14	5.65E-13
75	Pd^{+2}	7.68E-22	6.82E-22	3.37E-13	4.06E-12	0.00E+00	0.00E+00	4.40E-12	2.00E-15	2.31E-14
76	PO_4^{-3}	7.92E-19	6.28E-19	3.11E-10	4.47E-10	0.00E+00	0.00E+00	7.57E-10	3.44E-13	3.98E-12
77	Resin	0.00E+00	0.00E+00	0.00E+00	0.00E+00	0.00E+00	0.00E+00	0.00E+00	0.00E+00	0.00E+00
78	Rh^{+3}	7.42E-22	6.38E-22	3.16E-13	1.32E-12	0.00E+00	0.00E+00	1.63E-12	7.41E-16	8.58E-15
79	Ru^{+3}	1.10E-21	9.31E-22	4.61E-13	1.23E-11	0.00E+00	0.00E+00	1.27E-11	5.78E-15	6.69E-14
80	S^{+6}	0.00E+00	0.00E+00	0.00E+00	3.67E-28	0.00E+00	0.00E+00	3.67E-28	1.67E-31	1.93E-30
81	SiO2	1.50E-19	7.50E-20	3.71E-11	4.46E-10	0.00E+00	0.00E+00	4.83E-10	2.19E-13	2.54E-12
82	SiO_4^{-4}	7.85E-32	6.04E-32	2.99E-23	7.91E-18	0.00E+00	0.00E+00	7.91E-18	3.59E-21	4.16E-20
83	SO_2	1.21E-52	6.45E-53	3.19E-44	0.00E+00	0.00E+00	0.00E+00	3.19E-44	1.45E-47	1.68E-46
84	SO_4^{-2}	1.89E-18	1.52E-18	7.50E-10	1.61E-10	0.00E+00	0.00E+00	9.11E-10	4.14E-13	4.79E-12
85	Sr^{+2}	3.95E-22	2.89E-22	1.43E-13	6.44E-12	0.00E+00	0.00E+00	6.59E-12	2.99E-15	3.47E-14
86	Sucrose	0.00E+00	0.00E+00	0.00E+00	0.00E+00	0.00E+00	0.00E+00	0.00E+00	0.00E+00	0.00E+00
87	Ti^{+4}	1.23E-21	4.93E-22	2.44E-13	2.73E-12	0.00E+00	0.00E+00	2.98E-12	1.35E-15	1.57E-14
88	Zn^{+2}	4.61E-21	2.52E-21	1.25E-12	2.00E-11	0.00E+00	0.00E+00	2.13E-11	9.68E-15	1.12E-13
89	Zr^{+4}	3.40E-21	2.59E-21	1.28E-12	4.48E-10	0.00E+00	0.00E+00	4.49E-10	2.04E-13	2.36E-12
90										
91	Components	Aqueous Comp			Solid Comp	Gaseous		Total Comp		
92	Unit	mol/L	Lb/gal	Lb/day	Lb/day	mol/L	Lb/day	Lb/day	Mt/day	g/sec
93	Total	7.82E-19	5.75E-19	2.84E-10	2.24E-09	0.00E+00	0.00E+00	2.52E-09	1.15E-12	1.33E-11
94	$C_2O_4^{-2}$	7.82E-19	5.75E-19	2.84E-10	2.24E-09	0.00E+00	0.00E+00	2.52E-09	1.15E-12	1.33E-11
95	Formate	3.47E-31	1.30E-31	6.44E-23	3.08E-19	0.00E+00	0.00E+00	3.08E-19	1.40E-22	1.62E-21
96	Acetate	2.69E-31	1.32E-31	6.55E-23	3.13E-19	0.00E+00	0.00E+00	3.13E-19	1.42E-22	1.65E-21
97	Glycolate	1.79E-30	1.12E-30	5.54E-22	1.54E-19	0.00E+00	0.00E+00	1.54E-19	7.02E-23	8.13E-22
98	IDA	9.15E-31	1.02E-30	5.03E-22	3.93E-19	0.00E+00	0.00E+00	3.93E-19	1.79E-22	2.07E-21
99	Citrate	8.36E-32	1.34E-31	6.64E-23	3.37E-19	0.00E+00	0.00E+00	3.37E-19	1.53E-22	1.77E-21
100	HEDTA	3.92E-31	9.10E-31	4.50E-22	2.78E-19	0.00E+00	0.00E+00	2.77E-19	1.26E-22	1.46E-21
101	EDTA	4.71E-32	1.15E-31	5.68E-23	2.97E-19	0.00E+00	0.00E+00	2.97E-19	1.35E-22	1.56E-21
102										
103	Rad. Comp	Aqueous Rad. Comp			Solids Rad. Comp (1)			Total Rad. Comp (1)		
104	Unit	Ci/L	Ci/day	Lb/day	Ci/L	Ci/day	Lb/day	Ci/L	Ci/day	Lb/day
105	Total	2.35E-15	4.39E-06	2.20E-07	3.35E-15	6.28E-06	1.45E-07	5.70E-15	1.07E-05	3.65E-07
106	^{241}Am	1.51E-20	2.82E-11	1.81E-14	1.64E-18	3.08E-09	1.98E-12	1.66E-18	3.10E-09	2.00E-12
107	^{243}Am	9.84E-24	1.84E-14	2.04E-16	1.33E-22	2.49E-13	2.75E-15	1.43E-22	2.67E-13	2.95E-15
108	^{14}C	3.08E-16	5.76E-07	2.85E-10	1.16E-16	2.17E-07	1.07E-10	4.24E-16	7.93E-07	3.92E-10
109	^{60}Co	2.02E-21	3.78E-12	7.37E-18	1.81E-19	3.40E-10	6.62E-16	1.83E-19	3.44E-10	6.69E-18
110	^{243}Cm	1.62E-24	3.04E-15	1.33E-19	2.30E-21	4.30E-12	1.88E-16	2.30E-21	4.30E-12	1.88E-16
111	^{244}Cm	3.84E-23	7.20E-14	1.96E-18	5.22E-20	9.77E-11	2.66E-15	5.22E-20	9.78E-11	2.66E-15
112	^{137}Cs	1.38E-16	2.59E-07	6.58E-12	3.72E-17	6.96E-08	1.77E-12	1.75E-16	3.29E-07	8.34E-12
113	^{152}Eu	1.13E-22	2.12E-13	2.69E-18	8.73E-21	1.64E-11	2.07E-16	8.84E-21	1.66E-11	2.10E-16
114	^{154}Eu	2.35E-20	4.40E-11	3.59E-16	9.46E-19	1.77E-09	1.45E-14	9.69E-19	1.82E-09	1.48E-14
115	^{155}Eu	6.79E-21	1.27E-11	5.77E-17	1.40E-19	2.62E-10	1.19E-15	1.47E-19	2.75E-10	1.25E-15
116	^{3}H	1.88E-15	3.53E-06	8.10E-13	3.00E-15	5.63E-06	1.29E-12	4.89E-15	9.16E-06	2.10E-12
117	^{129}I	9.38E-18	1.76E-08	2.19E-07	6.05E-18	1.13E-08	1.42E-07	1.54E-17	2.89E-08	3.61E-07
118	^{63}Ni	3.64E-20	6.81E-11	2.64E-15	3.15E-20	5.90E-11	2.29E-15	6.79E-20	1.27E-10	4.93E-15
119	^{237}Np	1.19E-23	2.23E-14	6.99E-14	1.34E-21	2.52E-12	7.87E-12	1.36E-21	2.54E-12	7.94E-12
120	^{238}Pu	6.74E-23	1.26E-13	1.62E-17	6.38E-21	1.19E-11	1.54E-15	6.44E-21	1.21E-11	1.55E-15
121	^{239}Pu	9.32E-22	1.75E-12	6.20E-14	5.65E-20	1.06E-10	3.76E-12	5.74E-20	1.08E-10	3.82E-12
122	^{240}Pu	2.41E-22	4.52E-13	4.39E-15	1.49E-20	2.79E-11	2.71E-13	1.51E-20	2.84E-11	2.76E-13
123	^{241}Pu	5.07E-21	9.49E-12	2.03E-16	4.00E-19	7.49E-10	1.60E-14	4.05E-19	7.59E-10	1.62E-14
124	^{242}Pu	2.56E-26	4.79E-17	2.68E-17	1.37E-24	2.57E-15	1.44E-15	1.40E-24	2.62E-15	1.47E-15
125	^{125}Sb	1.40E-20	2.62E-11	5.58E-17	5.80E-19	1.09E-09	2.31E-15	5.94E-19	1.11E-09	2.37E-15
126	^{151}Sm	1.97E-19	3.69E-10	3.09E-14	7.02E-18	1.32E-08	1.10E-12	7.22E-18	1.35E-08	1.13E-12
127	^{126}Sn	2.23E-22	4.17E-13	8.10E-14	2.72E-21	5.09E-12	9.88E-13	2.94E-21	5.51E-12	1.07E-12
128	^{90}Sr	4.81E-18	9.00E-09	1.44E-13	1.80E-16	3.36E-07	5.37E-12	1.84E-16	3.45E-07	5.51E-12
129	^{99}Tc	3.87E-20	7.26E-11	9.44E-12	4.17E-19	7.81E-10	1.02E-10	4.56E-19	8.54E-10	1.11E-10
130	^{232}Th	3.62E-25	6.78E-16	1.36E-11	4.45E-23	8.33E-14	1.67E-09	4.48E-23	8.40E-14	1.68E-09
131	^{233}U	1.21E-23	2.26E-14	5.17E-15	3.64E-21	6.82E-12	1.56E-12	3.65E-21	6.84E-12	1.56E-12
132	^{234}U	8.57E-24	1.61E-14	5.70E-15	1.89E-22	3.54E-13	1.26E-13	1.98E-22	3.71E-13	1.32E-13
133	^{235}U	3.38E-25	6.32E-16	6.45E-13	4.55E-24	8.52E-15	8.69E-12	4.88E-24	9.15E-15	9.34E-12
134	^{238}U	5.78E-25	1.08E-15	3.69E-14	6.25E-24	1.17E-14	3.99E-13	6.83E-24	1.28E-14	4.36E-13
135	^{236}U	6.69E-24	1.25E-14	8.22E-11	1.07E-22	2.01E-13	1.32E-09	1.14E-22	2.13E-13	1.40E-09
136	(1) All radionuclides in gaseous streams are assumed to exist as solid particulate.									

Table C-18 PJV32 Stream Report

3	Stream Number:	PJV32
4	Stream Name:	HLW pulse ventilation header offgas
5	Configuration:	MRQ-05-0049.acmf
6	Run Date / Time:	12/14/2005 - 1:42:25 PM
7	Run Data File:	H:\ACM v3.1\MRQ-05-0049\MRQ_05_0049A_Streams.csv
8		

Stream Properties

	Variable	Value	Units	
11	Density	1.03E-03	g/cm^3	(does not include solid phase)
12	Enthalpy	-7.39E+05	BTU/hr	
13	Mass Flow	2.11E+04	Lb/hr	
14		5.06E+05	Lb/day	
15	Volumetric Flow	4.08E+04	GPM	(does not include solid phase)
16		5.45E+03	ft^3/min	(does not include solid phase)
17	Molar Flow	7.34E+02	Lbmol/hr	
18	Molecular Weight	2.87E+01	Lb/Lbmol	
19	Pressure	8.91E+02	mbar	
20	Temperature	2.52E+01	C	
21	Na Molarity	0.00E+00	mol/L	
22	pH	2.24E+00	pH	
23	Total TRU	5.30E-14	Ci/L	
24	Total Activity	1.76E-11	Ci/L	

	Component	Aqueous Comp			Solid Comp	Gaseous (1)		Total Comp		
27	Unit	mol/L	Lb/gal	Lb/day	Lb/day	mol/L	Lb/day	Lb/day	mt/day	g/sec
28	Total	2.94E-09	4.43E-10	2.60E-02	6.92E-05	3.59E-02	5.06E+05	5.06E+05	2.30E+02	2.66E+03
29	Ag^{+}	2.76E-23	2.49E-23	1.46E-15	7.67E-08	0.00E+00	0.00E+00	7.67E-08	3.49E-11	4.04E-10
30	Al^{+3}	3.34E-19	7.52E-20	4.42E-12	4.00E-06	0.00E+00	0.00E+00	4.00E-06	1.82E-09	2.10E-08
31	As^{+3}	1.22E-22	7.81E-23	4.47E-15	8.05E-09	0.00E+00	0.00E+00	8.05E-09	3.66E-12	4.24E-11
32	B^{+3}	1.87E-19	1.89E-20	9.91E-13	7.10E-06	0.00E+00	0.00E+00	7.10E-06	3.23E-09	3.73E-08
33	Ba^{+2}	2.54E-23	2.91E-23	1.71E-15	2.04E-08	0.00E+00	0.00E+00	2.04E-08	9.28E-12	1.07E-10
34	Bi^{+3}	2.99E-23	5.21E-23	3.06E-15	1.85E-07	0.00E+00	0.00E+00	1.85E-07	8.41E-11	9.73E-10
35	Ca^{+2}	6.08E-15	2.03E-15	1.19E-07	4.83E-08	0.00E+00	0.00E+00	1.68E-07	7.63E-11	8.83E-10
36	Cd^{+2}	4.71E-23	4.42E-23	2.59E-15	8.30E-07	0.00E+00	0.00E+00	8.30E-07	3.77E-10	4.37E-09
37	Ce^{+3}	6.78E-14	7.93E-14	4.66E-06	1.46E-08	0.00E+00	0.00E+00	4.67E-06	2.12E-09	2.46E-08
38	Cl^{-}	8.32E-14	2.46E-14	1.45E-06	3.73E-15	0.00E+00	0.00E+00	1.45E-06	6.57E-10	7.60E-09
39	CO	0.00E+00	0.00E+00	0.00E+00	0.00E+00	0.00E+00	0.00E+00	0.00E+00	0.00E+00	0.00E+00
40	CO_2	7.01E-18	2.58E-18	1.51E-10	0.00E+00	4.76E-15	1.03E-07	1.03E-07	4.67E-11	5.41E-10
41	CO_3^{-2}	4.07E-18	2.04E-16	1.20E-08	1.38E-10	0.00E+00	0.00E+00	1.21E-08	5.50E-12	6.37E-11
42	Cr^{+3}	4.83E-15	2.10E-15	1.23E-07	7.39E-08	0.00E+00	0.00E+00	1.97E-07	8.96E-11	1.04E-09
43	Cu^{+2}	4.67E-23	2.48E-23	1.45E-15	5.14E-09	0.00E+00	0.00E+00	5.14E-09	2.34E-12	2.70E-11
44	F^{-}	9.70E-13	1.54E-13	9.03E-06	6.78E-14	0.00E+00	0.00E+00	9.03E-06	4.11E-09	4.75E-08
45	Fe^{+3}	1.68E-14	7.84E-15	4.60E-07	3.04E-06	0.00E+00	0.00E+00	3.50E-06	1.59E-09	1.84E-08
46	H_2O	2.93E-09	4.40E-10	2.59E-02	0.00E+00	3.48E-04	3.07E+03	3.07E+03	1.40E+00	1.62E+01
47	$H_2O(b)$	0.00E+00	0.00E+00	0.00E+00	0.00E+00	0.00E+00	0.00E+00	0.00E+00	0.00E+00	0.00E+00
48	H^{+}	4.00E-15	3.37E-17	1.98E-09	0.00E+00	0.00E+00	0.00E+00	1.98E-09	8.99E-13	1.04E-11
49	HCL	0.00E+00	0.00E+00	0.00E+00	0.00E+00	0.00E+00	0.00E+00	0.00E+00	0.00E+00	0.00E+00
50	HCO3-	2.12E-14	1.08E-14	6.33E-07	7.68E-29	0.00E+00	0.00E+00	6.33E-07	2.88E-10	3.33E-09
51	H2CO3	0.00E+00	0.00E+00	0.00E+00	0.00E+00	0.00E+00	0.00E+00	0.00E+00	0.00E+00	0.00E+00
52	HF	0.00E+00	0.00E+00	0.00E+00	0.00E+00	0.00E+00	0.00E+00	0.00E+00	0.00E+00	0.00E+00
53	Hg^{+2}	0.00E+00	0.00E+00	0.00E+00	3.44E-06	0.00E+00	0.00E+00	3.44E-06	1.56E-09	1.81E-08
54	HNO_3	0.00E+00	0.00E+00	0.00E+00	0.00E+00	0.00E+00	0.00E+00	0.00E+00	0.00E+00	0.00E+00
55	K^{+}	5.33E-14	1.74E-14	1.02E-06	2.45E-23	0.00E+00	0.00E+00	1.02E-06	4.64E-10	5.37E-09
56	La^{+3}	1.31E-23	1.51E-23	8.89E-16	7.63E-08	0.00E+00	0.00E+00	7.63E-08	3.47E-11	4.01E-10
57	Li^{+}	1.29E-13	7.47E-15	4.39E-07	4.49E-07	0.00E+00	0.00E+00	8.88E-07	4.04E-10	4.67E-09
58	Mg^{+2}	3.85E-22	7.81E-23	4.59E-15	4.91E-08	0.00E+00	0.00E+00	4.91E-08	2.23E-11	2.59E-10
59	Mn^{+3}	4.17E-22	1.91E-22	1.12E-14	3.98E-07	0.00E+00	0.00E+00	3.98E-07	1.81E-10	2.10E-09
60	MnO_4^{-}	0.00E+00	0.00E+00	0.00E+00	0.00E+00	0.00E+00	0.00E+00	0.00E+00	0.00E+00	0.00E+00
61	N_2	0.00E+00	0.00E+00	0.00E+00	0.00E+00	2.81E-02	3.86E+05	3.86E+05	1.75E+02	2.03E+03
62	Na^{+}	5.15E-12	9.87E-13	5.80E-05	7.31E-12	0.00E+00	0.00E+00	5.80E-05	2.64E-08	3.05E-07
63	NH3	8.07E-16	1.15E-16	6.74E-09	0.00E+00	0.00E+00	0.00E+00	6.74E-09	3.06E-12	3.54E-11
64	NH4+	1.41E-13	1.15E-16	1.25E-06	0.00E+00	0.00E+00	0.00E+00	1.25E-06	5.68E-10	6.57E-09
65	Ni^{+2}	2.28E-15	1.12E-15	6.55E-08	1.50E-07	0.00E+00	0.00E+00	2.16E-07	9.82E-11	1.14E-09
66	NO	0.00E+00	0.00E+00	0.00E+00	0.00E+00	0.00E+00	0.00E+00	0.00E+00	0.00E+00	0.00E+00
67	NO_2	0.00E+00	0.00E+00	0.00E+00	0.00E+00	0.00E+00	0.00E+00	0.00E+00	0.00E+00	0.00E+00
68	NO_3^{-}	7.25E-19	2.78E-19	1.64E-11	2.12E-11	0.00E+00	0.00E+00	3.75E-11	1.71E-14	1.97E-13

CALCULATION SHEET

BY: E. Berrios
DATE: 12/22/05

PROJECT: WTP
JOB NO.: 24590
CALC NO.: 24590-WTP-M4C-FRP-00003
SHEET REV: D
SHEET NO.: C-37

SUBJECT: Integrated Baseline Emissions Report Non-SSFM Represented Constituents Emissions Rate Estimation

	A	B	C	D	E	F	G	H	I	J
69	NO_2^-	2.93E-12	1.52E-12	8.91E-05	1.63E-11	0.00E+00	0.00E+00	8.91E-05	4.05E-08	4.69E-07
70	O_2	0.00E+00	0.00E+00	0.00E+00	0.00E+00	7.47E-03	1.17E+05	1.17E+05	5.33E+01	6.17E+02
71	O^-	0.00E+00	0.00E+00	0.00E+00	2.77E-05	0.00E+00	0.00E+00	2.77E-05	1.26E-08	1.46E-07
72	OH^-	1.75E-12	2.49E-13	1.46E-05	3.97E-10	0.00E+00	0.00E+00	1.46E-05	6.64E-09	7.68E-08
73	$OH(b)^-$	7.40E-19	1.05E-19	6.17E-12	3.76E-34	0.00E+00	0.00E+00	6.17E-12	2.80E-15	3.24E-14
74	Pb^{+2}	1.71E-22	2.95E-22	1.73E-14	2.20E-07	0.00E+00	0.00E+00	2.20E-07	1.00E-10	1.16E-09
75	Pd^{+2}	1.33E-23	1.18E-23	6.95E-16	3.59E-09	0.00E+00	0.00E+00	3.59E-09	1.63E-12	1.89E-11
76	PO_4^{-3}	1.37E-20	1.08E-20	6.36E-13	2.04E-06	0.00E+00	0.00E+00	2.04E-06	9.28E-10	1.07E-08
77	Resin	0.00E+00	0.00E+00	0.00E+00	0.00E+00	0.00E+00	0.00E+00	0.00E+00	0.00E+00	0.00E+00
78	Rh^{+3}	1.29E-23	1.11E-23	6.50E-16	6.35E-09	0.00E+00	0.00E+00	6.35E-09	2.89E-12	3.34E-11
79	Ru^{+3}	1.90E-23	1.60E-23	9.39E-16	5.47E-07	0.00E+00	0.00E+00	5.47E-07	2.49E-10	2.88E-09
80	S^{+6}	0.00E+00	0.00E+00	0.00E+00	1.08E-29	0.00E+00	0.00E+00	1.08E-29	4.89E-33	5.66E-32
81	SiO2	2.58E-21	1.29E-21	7.60E-14	1.72E-05	0.00E+00	0.00E+00	1.72E-05	7.83E-09	9.06E-08
82	SiO_4^{-4}	1.97E-33	1.52E-33	8.90E-26	1.32E-12	0.00E+00	0.00E+00	1.32E-12	5.96E-16	6.92E-15
83	SO_2	0.00E+00	0.00E+00	0.00E+00	0.00E+00	0.00E+00	0.00E+00	0.00E+00	0.00E+00	0.00E+00
84	SO_4^{-2}	3.26E-20	2.61E-20	1.53E-12	1.93E-13	0.00E+00	0.00E+00	1.73E-12	7.85E-16	9.09E-15
85	Sr^{+2}	1.68E-16	1.23E-16	7.20E-09	4.17E-09	0.00E+00	0.00E+00	1.14E-08	5.17E-12	5.98E-11
86	Sucrose	0.00E+00	0.00E+00	0.00E+00	0.00E+00	0.00E+00	0.00E+00	0.00E+00	0.00E+00	0.00E+00
87	Ti^{+4}	2.15E-23	8.58E-24	5.04E-16	1.04E-09	0.00E+00	0.00E+00	1.04E-09	4.73E-13	5.47E-12
88	Zn^{+2}	7.96E-23	4.34E-23	2.55E-15	9.66E-07	0.00E+00	0.00E+00	9.66E-07	4.39E-10	5.08E-09
89	Zr^{+4}	5.87E-23	4.47E-23	2.63E-15	4.83E-07	0.00E+00	0.00E+00	4.83E-07	2.20E-10	2.54E-09
90										
91	Components	Aqueous Comp			Solid Comp	Gaseous		Total Comp		
92	Unit	mol/L	Lb/gal	Lb/day	Lb/day	mol/L	Lb/day	Lb/day	Mt/day	g/sec
93	Total	1.72E-20	1.26E-20	7.42E-13	3.01E-04	0.00E+00	0.00E+00	3.01E-04	1.37E-07	1.59E-06
94	$C_2O_4^{-2}$	1.72E-20	1.26E-20	7.42E-13	3.01E-04	0.00E+00	0.00E+00	3.01E-04	1.37E-07	1.59E-06
95	Formate	0.00E+00	0.00E+00	0.00E+00	0.00E+00	0.00E+00	0.00E+00	0.00E+00	0.00E+00	0.00E+00
96	Acetate	0.00E+00	0.00E+00	0.00E+00	1.89E-26	0.00E+00	0.00E+00	1.89E-26	8.59E-30	9.94E-29
97	Glycolate	0.00E+00	0.00E+00	0.00E+00	0.00E+00	0.00E+00	0.00E+00	0.00E+00	0.00E+00	0.00E+00
98	IDA	0.00E+00	0.00E+00	0.00E+00	0.00E+00	0.00E+00	0.00E+00	0.00E+00	0.00E+00	0.00E+00
99	Citrate	0.00E+00	0.00E+00	0.00E+00	5.15E-27	0.00E+00	0.00E+00	5.15E-27	2.34E-30	2.71E-29
100	HEDTA	0.00E+00	0.00E+00	0.00E+00	6.87E-27	0.00E+00	0.00E+00	6.87E-27	3.12E-30	3.61E-29
101	EDTA	0.00E+00	0.00E+00	0.00E+00	0.00E+00	0.00E+00	0.00E+00	0.00E+00	0.00E+00	0.00E+00
102										
103	Rad. Comp	Aqueous Rad. Comp			Solids Rad. Comp (1)			Total Rad. Comp (1)		
104	Unit	Ci/L	Ci/day	Lb/day	Ci/L	Ci/day	Lb/day	Ci/L	Ci/day	Lb/day
105	Total	1.69E-12	3.76E-04	6.00E-09	1.59E-11	3.53E-03	1.33E-05	1.76E-11	3.90E-03	1.33E-05
106	^{241}Am	2.59E-22	5.75E-14	3.70E-17	4.20E-14	9.34E-06	6.01E-09	4.20E-14	9.34E-06	6.01E-09
107	^{243}Am	1.69E-25	3.76E-17	4.15E-19	3.41E-18	7.58E-10	8.37E-12	3.41E-18	7.58E-10	8.37E-12
108	^{14}C	0.00E+00	0.00E+00	0.00E+00	0.00E+00	0.00E+00	0.00E+00	0.00E+00	0.00E+00	0.00E+00
109	^{60}Co	3.49E-23	7.76E-15	1.51E-20	3.75E-15	8.35E-07	1.63E-12	3.75E-15	8.35E-07	1.63E-12
110	^{243}Cm	2.80E-26	6.23E-18	2.72E-22	4.73E-17	1.05E-08	4.59E-13	4.73E-17	1.05E-08	4.59E-13
111	^{244}Cm	6.63E-25	1.48E-16	4.02E-21	1.07E-15	2.39E-07	6.51E-12	1.07E-15	2.39E-07	6.51E-12
112	^{137}Cs	7.61E-17	1.69E-08	4.30E-13	1.45E-11	3.23E-03	8.19E-08	1.45E-11	3.23E-03	8.19E-08
113	^{152}Eu	1.95E-24	4.33E-16	5.49E-21	1.80E-16	4.00E-08	5.08E-13	1.80E-16	4.00E-08	5.08E-13
114	^{154}Eu	4.03E-22	8.97E-14	7.32E-19	1.95E-14	4.34E-06	3.54E-11	1.95E-14	4.34E-06	3.54E-11
115	^{155}Eu	1.17E-22	2.59E-14	1.18E-19	2.89E-15	6.44E-07	2.92E-12	2.89E-15	6.44E-07	2.92E-12
116	^{3}H	2.11E-23	4.68E-15	1.07E-21	2.44E-15	5.43E-07	1.25E-13	2.44E-15	5.43E-07	1.25E-13
117	^{129}I	0.00E+00	0.00E+00	0.00E+00	7.71E-19	1.72E-10	2.14E-09	7.71E-19	1.72E-10	2.14E-09
118	^{63}Ni	6.25E-22	1.39E-13	5.39E-18	5.60E-16	1.25E-07	4.83E-12	5.60E-16	1.25E-07	4.83E-12
119	^{237}Np	2.06E-25	4.57E-17	1.43E-16	2.77E-17	6.16E-09	1.93E-08	2.77E-17	6.16E-09	1.93E-08
120	^{238}Pu	1.16E-24	2.57E-16	3.31E-20	1.31E-16	2.92E-08	3.76E-12	1.31E-16	2.92E-08	3.76E-12
121	^{239}Pu	1.60E-23	3.56E-15	1.26E-16	1.16E-15	2.59E-07	9.20E-09	1.16E-15	2.59E-07	9.20E-09
122	^{240}Pu	4.15E-24	9.23E-16	8.96E-18	3.07E-16	6.83E-08	6.64E-10	3.07E-16	6.83E-08	6.64E-10
123	^{241}Pu	8.71E-23	1.94E-14	4.15E-19	8.25E-15	1.83E-06	3.93E-11	8.25E-15	1.83E-06	3.93E-11
124	^{242}Pu	4.39E-28	9.77E-20	5.47E-20	2.06E-21	4.59E-13	2.57E-13	2.06E-21	4.59E-13	2.57E-13
125	^{125}Sb	2.41E-22	5.36E-14	1.14E-19	8.65E-15	1.92E-06	4.09E-12	8.65E-15	1.92E-06	4.09E-12
126	^{151}Sm	3.41E-21	7.59E-13	6.35E-17	8.03E-14	1.79E-05	1.50E-09	8.03E-14	1.79E-05	1.50E-09
127	^{126}Sn	3.83E-24	8.52E-16	1.65E-16	3.38E-17	7.51E-09	1.46E-09	3.38E-17	7.51E-09	1.46E-09
128	^{90}Sr	1.69E-12	3.76E-04	6.00E-09	9.78E-13	2.18E-04	3.47E-09	2.67E-12	5.94E-04	9.47E-09
129	^{99}Tc	6.69E-22	1.49E-13	1.93E-14	2.02E-13	4.49E-05	5.84E-06	2.02E-13	4.49E-05	5.84E-06
130	^{232}Th	6.30E-27	1.40E-18	2.81E-14	9.09E-19	2.02E-10	4.05E-06	9.09E-19	2.02E-10	4.05E-06
131	^{233}U	2.08E-25	4.63E-17	1.06E-17	7.50E-17	1.67E-08	3.82E-09	7.50E-17	1.67E-08	3.82E-09
132	^{234}U	1.48E-25	3.29E-17	1.17E-17	3.91E-18	8.69E-10	3.08E-10	3.91E-18	8.69E-10	3.08E-10
133	^{235}U	5.82E-27	1.30E-18	1.32E-15	8.79E-20	1.96E-11	2.00E-08	8.79E-20	1.96E-11	2.00E-08
134	^{236}U	9.98E-27	2.22E-18	7.56E-17	1.21E-19	2.69E-11	9.16E-10	1.21E-19	2.69E-11	9.16E-10
135	^{238}U	1.15E-25	2.57E-17	1.68E-13	2.20E-18	4.89E-10	3.21E-06	2.20E-18	4.89E-10	3.21E-06
136	(1) All radionuclides in gaseous streams are assumed to exist as solid particulate.									

CALCULATION SHEET

BY: E. Berrios
DATE: 12/22/05

PROJECT: WTP
JOB NO.: 24590
CALC NO.: 24590-WTP-M4C-FRP-00003
SHEET REV: D
SHEET NO.: C-38

SUBJECT: Integrated Baseline Emissions Report Non-SSFM Represented Constituents Emissions Rate Estimation

	A	B	C	D	E	F	G	H	I	J
1	**Table C-19 PJV34 Stream Report**									
3	Stream Number:		PJV34							
4	Stream Name:		Pulse vent HEPA discharge offgas							
5	Configuration:		MRQ-05-0049.acmf							
6	Run Date / Time:		12/14/2005 - 1:42:25 PM							
7	Run Data File:		H:\ACM v3.1\MRQ-05-0049\MRQ_05_0049A_Streams.csv							
8										
10	Variable	Value	Units							
11	Density	9.73E-04	g/cm^3	(does not include solid phase)						
12	Enthalpy	-6.84E+05	BTU/hr							
13	Mass Flow	2.11E+04	Lb/hr							
14		5.06E+05	Lb/day							
15	Volumetric Flow	4.33E+04	GPM	(does not include solid phase)						
16		5.79E+03	ft^3/min	(does not include solid phase)						
17	Molar Flow	7.34E+02	Lbmol/hr							
18	Molecular Weight	2.87E+01	Lb/Lbmol							
19	Pressure	8.56E+02	mbar							
20	Temperature	3.10E+01	C							
21	Na Molarity	0.00E+00	mol/L							
22	pH	1.44E+01	pH							
23	Total TRU	2.50E-19	Ci/L							
24	Total Activity	2.39E-15	Ci/L							
25										
26	Component	Aqueous Comp			Solid Comp	Gaseous (1)		Total Comp		
27	Unit	mol/L	Lb/gal	Lb/day	Lb/day	mol/L	Lb/day	Lb/day	mt/day	g/sec
28	Total	2.76E-09	4.15E-10	2.59E-02	3.44E-06	3.38E-02	5.06E+05	5.06E+05	2.30E+02	2.66E+03
29	Ag^{+}	1.30E-28	1.17E-28	7.31E-21	3.84E-13	0.00E+00	0.00E+00	3.84E-13	1.74E-16	2.02E-15
30	Al^{+3}	1.57E-24	3.54E-25	2.21E-17	2.00E-11	0.00E+00	0.00E+00	2.00E-11	9.09E-15	1.05E-13
31	As^{+3}	5.73E-28	3.59E-28	2.24E-20	4.03E-14	0.00E+00	0.00E+00	4.03E-14	1.83E-17	2.12E-16
32	B^{+3}	8.81E-25	7.95E-26	4.95E-18	3.55E-11	0.00E+00	0.00E+00	3.55E-11	1.61E-14	1.87E-13
33	Ba^{+2}	1.20E-28	1.37E-28	8.54E-21	1.02E-13	0.00E+00	0.00E+00	1.02E-13	4.64E-17	5.37E-16
34	Bi^{+3}	1.41E-28	2.45E-28	1.53E-20	9.25E-13	0.00E+00	0.00E+00	9.25E-13	4.20E-16	4.87E-15
35	Ca^{+2}	2.87E-20	9.58E-21	5.97E-13	2.42E-13	0.00E+00	0.00E+00	8.39E-13	3.81E-16	4.41E-15
36	Cd^{+2}	2.22E-28	2.08E-28	1.30E-20	4.15E-12	0.00E+00	0.00E+00	4.15E-12	1.89E-15	2.18E-14
37	Ce^{+3}	3.20E-19	3.74E-19	2.33E-11	7.29E-14	0.00E+00	0.00E+00	2.34E-11	1.06E-14	1.23E-13
38	Cl^{-}	3.92E-19	1.16E-19	7.23E-12	1.87E-20	0.00E+00	0.00E+00	7.23E-12	3.28E-15	3.80E-14
39	CO	0.00E+00	0.00E+00	0.00E+00	0.00E+00	0.00E+00	0.00E+00	0.00E+00	0.00E+00	0.00E+00
40	CO_2	6.61E-18	2.43E-18	1.51E-10	0.00E+00	4.48E-15	1.03E-07	1.03E-07	4.67E-11	5.41E-10
41	CO_3^{-2}	1.92E-21	9.59E-22	5.98E-14	6.91E-16	0.00E+00	0.00E+00	6.05E-14	2.75E-17	3.18E-16
42	Cr^{+3}	2.28E-20	9.88E-21	6.16E-13	3.69E-13	0.00E+00	0.00E+00	9.85E-13	4.48E-16	5.18E-15
43	Cu^{+2}	2.20E-28	1.17E-28	7.27E-21	2.57E-14	0.00E+00	0.00E+00	2.57E-14	1.17E-17	1.35E-16
44	F^{-}	4.57E-18	7.24E-19	4.52E-11	3.39E-19	0.00E+00	0.00E+00	4.52E-11	2.05E-14	2.38E-13
45	Fe^{+3}	7.92E-20	3.69E-20	2.30E-12	1.52E-11	0.00E+00	0.00E+00	1.75E-11	7.96E-15	9.21E-14
46	H_2O	2.76E-09	4.15E-10	2.59E-02	0.00E+00	3.28E-04	3.07E+03	3.07E+03	1.40E+00	1.62E+01
47	$H_2O(b)$	0.00E+00	0.00E+00	0.00E+00	0.00E+00	0.00E+00	0.00E+00	0.00E+00	0.00E+00	0.00E+00
48	H^{+}	3.77E-15	3.17E-17	1.98E-09	0.00E+00	0.00E+00	0.00E+00	1.98E-09	8.98E-13	1.04E-11
49	HCL	0.00E+00	0.00E+00	0.00E+00	0.00E+00	0.00E+00	0.00E+00	0.00E+00	0.00E+00	0.00E+00
50	HCO3-	9.97E-20	5.08E-20	3.17E-12	3.84E-34	0.00E+00	0.00E+00	3.17E-12	1.44E-15	1.67E-14
51	H2CO3	0.00E+00	0.00E+00	0.00E+00	0.00E+00	0.00E+00	0.00E+00	0.00E+00	0.00E+00	0.00E+00
52	HF	0.00E+00	0.00E+00	0.00E+00	0.00E+00	0.00E+00	0.00E+00	0.00E+00	0.00E+00	0.00E+00
53	Hg^{+2}	0.00E+00	0.00E+00	0.00E+00	3.44E-06	0.00E+00	0.00E+00	3.44E-06	1.56E-09	1.81E-08
54	HNO_3	0.00E+00	0.00E+00	0.00E+00	0.00E+00	0.00E+00	0.00E+00	0.00E+00	0.00E+00	0.00E+00
55	K^{+}	2.51E-19	8.19E-20	5.10E-12	1.23E-28	0.00E+00	0.00E+00	5.10E-12	2.32E-15	2.69E-14
56	La^{+3}	6.15E-29	7.13E-29	4.45E-21	3.81E-13	0.00E+00	0.00E+00	3.81E-13	1.73E-16	2.01E-15
57	Li^{+}	6.08E-19	3.52E-20	2.19E-12	2.25E-12	0.00E+00	0.00E+00	4.44E-12	2.02E-15	2.34E-14
58	Mg^{+2}	1.81E-27	3.68E-28	2.29E-20	2.46E-13	0.00E+00	0.00E+00	2.46E-13	1.12E-16	1.29E-15
59	Mn^{+3}	1.97E-27	9.02E-28	5.62E-20	1.99E-12	0.00E+00	0.00E+00	1.99E-12	9.05E-16	1.05E-14
60	MnO_4^{-}	0.00E+00	0.00E+00	0.00E+00	0.00E+00	0.00E+00	0.00E+00	0.00E+00	0.00E+00	0.00E+00
61	N_2	0.00E+00	0.00E+00	0.00E+00	0.00E+00	2.65E-02	3.86E+05	3.86E+05	1.75E+02	2.03E+03
62	Na^{+}	2.42E-17	4.65E-18	2.90E-10	3.65E-17	0.00E+00	0.00E+00	2.90E-10	1.32E-13	1.53E-12
63	NH3	7.60E-16	1.08E-16	6.74E-09	0.00E+00	0.00E+00	0.00E+00	6.74E-09	3.06E-12	3.54E-11
64	NH4+	6.65E-19	1.08E-16	6.24E-12	0.00E+00	0.00E+00	0.00E+00	6.24E-12	2.84E-15	3.28E-14
65	Ni^{+2}	1.07E-20	5.25E-21	3.28E-13	7.52E-13	0.00E+00	0.00E+00	1.08E-12	4.91E-16	5.68E-15
66	NO	0.00E+00	0.00E+00	0.00E+00	0.00E+00	0.00E+00	0.00E+00	0.00E+00	0.00E+00	0.00E+00
67	NO_2	0.00E+00	0.00E+00	0.00E+00	0.00E+00	0.00E+00	0.00E+00	0.00E+00	0.00E+00	0.00E+00
68	NO_2^{-}	3.42E-24	1.31E-24	8.18E-17	1.06E-16	0.00E+00	0.00E+00	1.88E-16	8.53E-20	9.87E-19
69	NO_3^{-}	1.38E-17	7.14E-18	4.45E-10	6.16E-17	0.00E+00	0.00E+00	4.45E-10	2.02E-13	2.34E-12
70	O_2	0.00E+00	0.00E+00	0.00E+00	0.00E+00	7.04E-03	1.17E+05	1.17E+05	5.33E+01	6.17E+02
71	O^{-}	0.00E+00	0.00E+00	0.00E+00	1.39E-10	0.00E+00	0.00E+00	1.39E-10	6.31E-14	7.30E-13
72	OH^{-}	8.25E-18	1.17E-18	7.30E-11	1.98E-15	0.00E+00	0.00E+00	7.30E-11	3.32E-14	3.84E-13
73	$OH(b)^{-}$	3.48E-24	4.95E-25	3.08E-17	1.88E-39	0.00E+00	0.00E+00	3.08E-17	1.40E-20	1.62E-19

CALCULATION SHEET

BY: E. Berrios
DATE: 12/22/05

PROJECT: WTP
JOB NO.: 24590
CALC NO.: 24590-WTP-M4C-FRP-00003
SHEET REV: D
SHEET NO.: C-39

SUBJECT: Integrated Baseline Emissions Report Non-SSFM Represented Constituents Emissions Rate Estimation

	A	B	C	D	E	F	G	H	I	J
74	Pb^{+2}	8.05E-28	1.39E-27	8.87E-20	1.10E-12	0.00E+00	0.00E+00	1.10E-12	5.00E-16	5.79E-15
75	Pd^{+2}	6.27E-29	5.57E-29	3.47E-21	1.80E-14	0.00E+00	0.00E+00	1.80E-14	8.17E-18	9.45E-17
76	PO_4^{-3}	6.44E-26	5.10E-26	3.18E-18	1.02E-11	0.00E+00	0.00E+00	1.02E-11	4.64E-15	5.37E-14
77	Resin	0.00E+00	0.00E+00	0.00E+00	0.00E+00	0.00E+00	0.00E+00	0.00E+00	0.00E+00	0.00E+00
78	Rh^{+3}	6.07E-29	5.21E-29	3.25E-21	3.18E-14	0.00E+00	0.00E+00	3.18E-14	1.44E-17	1.67E-16
79	Ru^{+3}	8.93E-29	7.53E-29	4.70E-21	2.73E-12	0.00E+00	0.00E+00	2.73E-12	1.24E-15	1.44E-14
80	S^{-2}	0.00E+00	0.00E+00	0.00E+00	5.38E-35	0.00E+00	0.00E+00	5.38E-35	2.45E-38	2.83E-37
81	SiO2	1.22E-26	6.10E-27	3.80E-19	8.61E-11	0.00E+00	0.00E+00	8.61E-11	3.91E-14	4.53E-13
82	SiO_4^{-4}	9.29E-39	7.14E-39	4.45E-31	6.58E-18	0.00E+00	0.00E+00	6.58E-18	2.99E-21	3.46E-20
83	SO_2	0.00E+00	0.00E+00	0.00E+00	0.00E+00	0.00E+00	0.00E+00	0.00E+00	0.00E+00	0.00E+00
84	SO_4^{-2}	1.54E-25	1.23E-25	7.67E-18	9.63E-19	0.00E+00	0.00E+00	8.64E-18	3.93E-21	4.54E-20
85	Sr^{+2}	7.90E-22	5.78E-22	3.60E-14	2.08E-14	0.00E+00	0.00E+00	5.68E-14	2.58E-17	2.99E-16
86	Sucrose	0.00E+00	0.00E+00	0.00E+00	0.00E+00	0.00E+00	0.00E+00	0.00E+00	0.00E+00	0.00E+00
87	Ti^{+4}	1.01E-28	4.04E-29	2.52E-21	5.20E-15	0.00E+00	0.00E+00	5.20E-15	2.36E-18	2.73E-17
88	Zn^{+2}	3.75E-28	2.05E-28	1.28E-20	4.83E-12	0.00E+00	0.00E+00	4.83E-12	2.19E-15	2.54E-14
89	Zr^{+4}	2.77E-28	2.11E-28	1.31E-20	2.42E-12	0.00E+00	0.00E+00	2.42E-12	1.10E-15	1.27E-14
90										
91	Components	Aqueous Comp			Solid Comp	Gaseous		Total Comp		
92	Unit	mol/L	Lb/gal	Lb/day	Lb/day	mol/L	Lb/day	Lb/day	Mt/day	g/sec
93	Total	8.10E-26	5.95E-26	3.71E-18	1.51E-09	0.00E+00	0.00E+00	1.51E-09	6.85E-13	7.93E-12
94	$C_2O_4^{-2}$	8.10E-26	5.95E-26	3.71E-18	1.51E-09	0.00E+00	0.00E+00	1.51E-09	6.85E-13	7.93E-12
95	Formate	0.00E+00	0.00E+00	0.00E+00	0.00E+00	0.00E+00	0.00E+00	0.00E+00	0.00E+00	0.00E+00
96	Acetate	0.00E+00	0.00E+00	0.00E+00	9.45E-32	0.00E+00	0.00E+00	9.45E-32	4.29E-35	4.97E-34
97	Glycolate	0.00E+00	0.00E+00	0.00E+00	0.00E+00	0.00E+00	0.00E+00	0.00E+00	0.00E+00	0.00E+00
98	IDA	0.00E+00	0.00E+00	0.00E+00	0.00E+00	0.00E+00	0.00E+00	0.00E+00	0.00E+00	0.00E+00
99	Citrate	0.00E+00	0.00E+00	0.00E+00	2.58E-32	0.00E+00	0.00E+00	2.58E-32	1.17E-35	1.36E-34
100	HEDTA	0.00E+00	0.00E+00	0.00E+00	3.44E-32	0.00E+00	0.00E+00	3.44E-32	1.56E-35	1.81E-34
101	EDTA	0.00E+00	0.00E+00	0.00E+00	0.00E+00	0.00E+00	0.00E+00	0.00E+00	0.00E+00	0.00E+00
102										
103	Rad. Comp	Aqueous Rad. Comp			Solids Rad. Comp (1)			Total Rad. Comp (1)		
104	Unit	Ci/L	Ci/day	Lb/day	Ci/L	Ci/day	Lb/day	Ci/L	Ci/day	Lb/day
105	Total	7.97E-18	1.88E-09	3.00E-14	2.38E-15	5.61E-07	2.21E-09	2.39E-15	5.63E-07	2.21E-09
106	^{241}Am	1.22E-27	2.88E-19	1.85E-22	1.98E-19	4.67E-11	3.00E-14	1.98E-19	4.67E-11	3.00E-14
107	^{243}Am	7.96E-31	1.88E-22	2.06E-24	1.61E-23	3.79E-15	4.18E-17	1.61E-23	3.79E-15	4.18E-17
108	^{14}C	0.00E+00	0.00E+00	0.00E+00	0.00E+00	0.00E+00	0.00E+00	0.00E+00	0.00E+00	0.00E+00
109	^{60}Co	1.64E-28	3.88E-20	7.56E-26	1.77E-20	4.17E-12	8.13E-18	1.77E-20	4.17E-12	8.13E-18
110	^{243}Cm	1.32E-31	3.12E-23	1.36E-27	2.23E-22	5.26E-14	2.29E-18	2.23E-22	5.26E-14	2.29E-18
111	^{244}Cm	3.13E-30	7.38E-22	2.01E-26	5.06E-21	1.20E-12	3.26E-17	5.06E-21	1.20E-12	3.26E-17
112	^{137}Cs	3.58E-22	8.46E-14	2.15E-18	6.84E-17	1.61E-08	4.10E-13	6.84E-17	1.61E-08	4.10E-13
113	^{152}Eu	9.17E-30	2.16E-21	2.75E-26	8.48E-22	2.00E-13	2.54E-18	8.48E-22	2.00E-13	2.54E-18
114	^{154}Eu	1.90E-27	4.49E-19	3.66E-24	9.19E-20	2.17E-11	1.77E-16	9.19E-20	2.17E-11	1.77E-16
115	^{155}Eu	5.50E-28	1.30E-19	5.69E-25	1.36E-20	3.22E-12	1.46E-17	1.36E-20	3.22E-12	1.46E-17
116	^{3}H	1.98E-23	4.68E-15	1.07E-21	2.30E-15	5.43E-07	1.25E-13	2.30E-15	5.43E-07	1.25E-13
117	^{129}I	0.00E+00	0.00E+00	0.00E+00	7.27E-19	1.72E-10	2.14E-09	7.27E-19	1.72E-10	2.14E-09
118	^{63}Ni	2.94E-27	6.95E-19	2.70E-23	2.64E-21	6.23E-13	2.42E-17	2.64E-21	6.23E-13	2.42E-17
119	^{237}Np	9.69E-31	2.29E-22	7.15E-22	1.31E-22	3.08E-14	9.63E-14	1.31E-22	3.08E-14	9.63E-14
120	^{238}Pu	5.45E-30	1.29E-21	1.66E-25	6.19E-22	1.46E-13	1.88E-17	6.19E-22	1.46E-13	1.88E-17
121	^{239}Pu	7.54E-29	1.78E-20	8.32E-22	5.49E-21	1.29E-12	4.60E-14	5.49E-21	1.29E-12	4.60E-14
122	^{240}Pu	1.95E-29	4.61E-21	4.48E-23	1.45E-21	3.42E-13	3.32E-15	1.45E-21	3.42E-13	3.32E-15
123	^{241}Pu	4.10E-28	9.68E-20	2.07E-24	3.89E-20	9.17E-12	1.96E-16	3.89E-20	9.17E-12	1.96E-16
124	^{242}Pu	2.07E-33	4.88E-25	2.73E-25	9.72E-27	2.29E-18	1.28E-18	9.72E-27	2.29E-18	1.28E-18
125	^{125}Sb	1.14E-27	2.68E-19	5.69E-25	4.08E-20	9.62E-12	2.04E-17	4.08E-20	9.62E-12	2.04E-17
126	^{151}Sm	1.61E-26	3.79E-18	3.18E-22	3.78E-19	8.93E-11	7.48E-15	3.78E-19	8.93E-11	7.48E-15
127	^{126}Sn	1.81E-29	4.26E-21	8.27E-22	1.59E-22	3.75E-14	7.29E-15	1.59E-22	3.75E-14	7.29E-15
128	^{90}Sr	7.97E-18	1.88E-09	3.00E-14	4.81E-18	1.09E-09	1.74E-14	1.26E-17	2.97E-09	4.74E-14
129	^{99}Tc	3.15E-27	7.43E-19	9.67E-20	9.52E-19	2.25E-10	2.92E-11	9.52E-19	2.25E-10	2.92E-11
130	^{232}Th	2.97E-32	7.01E-24	1.40E-19	4.28E-24	1.01E-15	2.03E-11	4.28E-24	1.01E-15	2.03E-11
131	^{233}U	9.81E-31	2.32E-22	5.30E-23	3.53E-22	8.34E-14	1.91E-14	3.53E-22	8.34E-14	1.91E-14
132	^{234}U	6.97E-31	1.64E-22	5.84E-23	1.84E-23	4.34E-15	1.54E-15	1.84E-23	4.34E-15	1.54E-15
133	^{235}U	2.74E-32	6.48E-24	6.61E-21	4.14E-25	9.78E-17	9.98E-14	4.14E-25	9.78E-17	9.98E-14
134	^{236}U	4.70E-32	1.11E-23	3.78E-22	5.69E-25	1.34E-16	4.58E-15	5.69E-25	1.34E-16	4.58E-15
135	^{238}U	5.44E-31	1.28E-22	8.42E-19	1.04E-23	2.45E-15	1.60E-11	1.04E-23	2.45E-15	1.60E-11
136	(1) All radionuclides in gaseous streams are assumed to exist as solid particulate.									

	A	B	C	D	E	F	G	H	I	J
1	**Table C-20 PVP01 Stream Report**									
3	**Stream Number:**		PVP01							
4	**Stream Name:**		Pretreatment vessel vents feed to caustic scrubber							
5	**Configuration:**		MRQ-05-0049.acmf							
6	**Run Date / Time:**		12/14/2005 - 1:42:25 PM							
7	**Run Data File:**		H:\ACM v3.1\MRQ-05-0049\MRQ_05_0049A_Streams.csv							
8										
9	**Stream Properties**									
10	**Variable**	**Value**	**Units**							
11	Density	1.10E-03	g/cm^3	(does not include solid phase)						
12	Enthalpy	-4.75E+06	BTU/hr							
13	Mass Flow	3.28E+04	Lb/hr							
14		7.87E+05	Lb/day							
15	Volumetric Flow	5.95E+04	GPM	(does not include solid phase)						
16		7.96E+03	ft^3/min	(does not include solid phase)						
17	Molar Flow	1.15E+03	Lbmol/hr							
18	Molecular Weight	2.84E+01	Lb/Lbmol							
19	Pressure	9.68E+02	mbar							
20	Temperature	2.89E+01	C							
21	Na Molarity	0.00E+00	mol/L							
22	pH	5.55E+00	pH							
23	Total TRU	9.27E-12	Ci/L							
24	Total Activity	2.10E-09	Ci/L							
25										
26	**Component**	**Aqueous Comp**			**Solid Comp**	**Gaseous (1)**		**Total Comp**		
27	**Unit**	**mol/L**	**Lb/gal**	**Lb/day**	**Lb/day**	**mol/L**	**Lb/day**	**Lb/day**	**mt/day**	**g/sec**
28	**Total**	1.69E-07	2.65E-08	2.27E+00	2.59E-02	3.86E-02	7.84E+05	7.84E+05	3.56E+02	4.13E+03
29	Ag^+	5.18E-14	4.66E-14	3.99E-06	1.64E-05	0.00E+00	0.00E+00	2.04E-05	9.25E-09	1.07E-07
30	Al^{+3}	4.93E-10	1.11E-10	9.52E-03	1.90E-03	0.00E+00	0.00E+00	1.14E-02	5.19E-06	6.01E-05
31	As^{+3}	2.09E-13	1.30E-13	1.12E-05	1.92E-06	0.00E+00	0.00E+00	1.31E-05	5.96E-09	6.89E-08
32	B^{+3}	3.68E-12	3.32E-13	2.85E-05	4.82E-04	0.00E+00	0.00E+00	5.10E-04	2.32E-07	2.68E-06
33	Ba^{+2}	4.91E-14	5.83E-14	4.83E-06	1.51E-05	0.00E+00	0.00E+00	1.99E-05	9.04E-09	1.05E-07
34	Bi^{+3}	3.00E-14	5.23E-14	4.49E-06	4.24E-05	0.00E+00	0.00E+00	4.68E-05	2.13E-08	2.46E-07
35	Ca^{+2}	7.54E-11	2.52E-11	2.16E-03	3.10E-03	0.00E+00	0.00E+00	5.26E-03	2.39E-06	2.77E-05
36	Cd^{+2}	4.86E-14	4.58E-14	3.91E-06	3.34E-05	0.00E+00	0.00E+00	3.73E-05	1.69E-08	1.96E-07
37	Ce^{+3}	1.89E-12	2.21E-12	1.89E-04	1.71E-05	0.00E+00	0.00E+00	2.07E-04	9.39E-08	1.09E-06
38	Cl^-	6.53E-11	1.93E-11	1.66E-03	1.08E-05	0.00E+00	0.00E+00	1.67E-03	7.57E-07	8.77E-06
39	CO	4.90E-35	1.15E-35	9.82E-28	0.00E+00	1.36E-71	2.73E-64	9.82E-28	4.46E-31	5.17E-30
40	CO_2	8.00E-15	2.94E-15	2.52E-07	0.00E+00	1.45E-12	4.56E-05	4.59E-05	2.08E-08	2.41E-07
41	CO_3^{-2}	4.60E-10	2.30E-10	1.97E-02	1.82E-03	0.00E+00	0.00E+00	2.16E-02	9.80E-06	1.13E-04
42	Cr^{+3}	8.09E-12	3.51E-12	3.01E-04	2.85E-05	0.00E+00	0.00E+00	3.29E-04	1.50E-07	1.73E-06
43	Cu^{+2}	8.75E-14	4.64E-14	3.98E-06	6.19E-06	0.00E+00	0.00E+00	1.02E-05	4.62E-09	5.35E-08
44	F^-	2.82E-11	4.47E-12	3.83E-04	1.79E-04	0.00E+00	0.00E+00	5.62E-04	2.56E-07	2.96E-06
45	Fe^{+3}	2.83E-12	1.32E-12	1.13E-04	2.47E-03	0.00E+00	0.00E+00	2.58E-03	1.17E-06	1.36E-05
46	H_2O	1.58E-07	2.38E-08	2.04E+00	0.00E+00	1.55E-03	2.00E+04	2.00E+04	9.08E+00	1.05E+02
47	$H_2O(b)$	0.00E+00	0.00E+00	0.00E+00	0.00E+00	0.00E+00	0.00E+00	0.00E+00	0.00E+00	0.00E+00
48	H^+	7.69E-11	6.47E-13	5.55E-05	0.00E+00	0.00E+00	0.00E+00	5.55E-05	2.52E-08	2.92E-07
49	HCL	0.00E+00	0.00E+00	0.00E+00	0.00E+00	8.61E-35	2.25E-27	2.25E-27	1.02E-30	1.18E-29
50	HCO3-	4.08E-16	2.08E-16	1.78E-08	0.00E+00	0.00E+00	0.00E+00	1.78E-08	8.10E-12	9.38E-11
51	H2CO3	8.00E-28	4.14E-28	3.55E-20	0.00E+00	0.00E+00	0.00E+00	3.55E-20	1.61E-23	1.87E-22
52	HF	0.00E+00	0.00E+00	0.00E+00	0.00E+00	1.13E-35	1.62E-28	1.62E-28	7.35E-32	8.51E-31
53	Hg^{+2}	8.38E-14	1.40E-13	1.20E-05	4.34E-05	0.00E+00	0.00E+00	5.55E-05	2.52E-08	2.92E-07
54	HNO_3	0.00E+00	0.00E+00	0.00E+00	0.00E+00	1.05E-33	4.72E-26	4.72E-26	2.15E-29	2.48E-28
55	K^+	1.41E-10	4.60E-11	3.95E-03	2.99E-05	0.00E+00	0.00E+00	3.98E-03	1.81E-06	2.09E-05
56	La^{+3}	2.22E-14	2.57E-14	2.21E-06	2.51E-05	0.00E+00	0.00E+00	2.73E-05	1.24E-08	1.44E-07
57	Li^+	2.95E-12	1.71E-13	1.47E-05	1.12E-05	0.00E+00	0.00E+00	2.59E-05	1.18E-08	1.36E-07
58	Mg^{+2}	6.64E-12	1.35E-12	1.16E-04	3.70E-04	0.00E+00	0.00E+00	4.86E-04	2.21E-07	2.56E-06
59	Mn^{+3}	7.36E-13	3.37E-13	2.89E-05	2.02E-04	0.00E+00	0.00E+00	2.31E-04	1.05E-07	1.21E-06
60	MnO_4^-	0.00E+00	0.00E+00	0.00E+00	0.00E+00	0.00E+00	0.00E+00	0.00E+00	0.00E+00	0.00E+00
61	N_2	3.18E-12	7.42E-13	6.37E-05	0.00E+00	2.92E-02	5.86E+05	5.86E+05	2.66E+02	3.08E+03
62	Na^+	3.77E-09	7.23E-10	6.20E-02	2.02E-03	0.00E+00	0.00E+00	6.40E-02	2.91E-05	3.37E-04
63	NH3	5.47E-12	7.78E-13	6.67E-05	0.00E+00	1.26E-10	1.53E-03	1.60E-03	7.28E-07	8.42E-06
64	NH4+	3.02E-15	7.78E-13	3.90E-08	0.00E+00	0.00E+00	0.00E+00	3.90E-08	1.77E-11	2.05E-10
65	Ni^{+2}	6.88E-13	3.37E-13	2.89E-05	5.41E-05	0.00E+00	0.00E+00	8.30E-05	3.77E-08	4.37E-07
66	NO	3.98E-34	9.97E-35	8.54E-27	0.00E+00	0.00E+00	0.00E+00	6.54E-27	3.88E-30	4.50E-29
67	NO_2	0.00E+00	0.00E+00	0.00E+00	0.00E+00	8.65E-50	2.85E-42	2.85E-42	1.29E-45	1.50E-44
68	NO_2^-	7.39E-10	2.84E-10	2.43E-02	5.04E-04	0.00E+00	0.00E+00	2.48E-02	1.13E-05	1.31E-04

	A	B	C	D	E	F	G	H	I	J
69	NO_3^-	1.49E-09	7.73E-10	6.63E-02	4.10E-04	0.00E+00	0.00E+00	6.67E-02	3.03E-05	3.51E-04
70	O_2	1.02E-12	2.73E-13	2.34E-05	0.00E+00	7.77E-03	1.78E+05	1.78E+05	8.09E+01	9.36E+02
71	O^-	0.00E+00	0.00E+00	0.00E+00	1.33E-03	0.00E+00	0.00E+00	1.33E-03	6.02E-07	6.97E-06
72	OH^-	3.52E-09	5.00E-10	4.29E-02	7.51E-03	0.00E+00	0.00E+00	5.04E-02	2.29E-05	2.65E-04
73	$OH(b)^-$	5.30E-17	7.52E-18	6.45E-10	1.98E-19	0.00E+00	0.00E+00	8.45E-10	2.93E-13	3.39E-12
74	Pb^{+2}	1.72E-13	2.97E-13	2.54E-05	6.94E-05	0.00E+00	0.00E+00	9.48E-05	4.31E-08	4.99E-07
75	Pd^{+2}	1.35E-14	1.20E-14	1.03E-06	2.90E-06	0.00E+00	0.00E+00	3.93E-06	1.79E-09	2.07E-08
76	PO_4^{-3}	2.34E-11	1.86E-11	1.59E-03	5.34E-04	0.00E+00	0.00E+00	2.13E-03	9.66E-07	1.12E-05
77	Resin	0.00E+00	0.00E+00	0.00E+00	0.00E+00	0.00E+00	0.00E+00	0.00E+00	0.00E+00	0.00E+00
78	Rh^{+3}	1.28E-14	1.10E-14	9.41E-07	9.21E-07	0.00E+00	0.00E+00	1.86E-06	8.47E-10	9.80E-09
79	Ru^{+3}	1.90E-14	1.60E-14	1.37E-06	8.34E-06	0.00E+00	0.00E+00	9.72E-06	4.42E-09	5.11E-08
80	S^{+6}	0.00E+00	0.00E+00	0.00E+00	3.44E-20	0.00E+00	0.00E+00	3.44E-20	1.56E-23	1.81E-22
81	SiO2	7.83E-12	3.92E-12	3.36E-04	1.84E-03	0.00E+00	0.00E+00	2.18E-03	9.91E-07	1.15E-05
82	SiO_4^{-4}	4.31E-19	3.31E-19	2.84E-11	2.77E-10	0.00E+00	0.00E+00	3.05E-10	1.39E-13	1.60E-12
83	SO_2	1.57E-37	8.39E-38	7.19E-30	0.00E+00	0.00E+00	0.00E+00	7.19E-30	3.27E-33	3.78E-32
84	SO_4^{-2}	3.58E-11	2.87E-11	2.46E-03	1.20E-04	0.00E+00	0.00E+00	2.58E-03	1.17E-06	1.36E-05
85	Sr^{+2}	6.88E-15	5.02E-15	4.30E-07	4.50E-06	0.00E+00	0.00E+00	4.93E-06	2.24E-09	2.59E-08
86	Sucrose	0.00E+00	0.00E+00	0.00E+00	4.32E-37	0.00E+00	0.00E+00	4.32E-37	1.96E-40	2.27E-39
87	Ti^{+4}	4.10E-14	1.64E-14	1.40E-06	5.43E-06	0.00E+00	0.00E+00	6.84E-06	3.11E-09	3.60E-08
88	Zn^{+2}	1.39E-13	7.61E-14	6.52E-06	1.11E-04	0.00E+00	0.00E+00	1.17E-04	5.33E-08	6.17E-07
89	Zr^{+4}	1.13E-13	8.61E-14	7.38E-06	6.10E-04	0.00E+00	0.00E+00	6.18E-04	2.81E-07	3.25E-06
90										
91	Components	Aqueous Comp			Solid Comp	Gaseous		Total Comp		
92	Unit	mol/L	Lb/gal	Lb/day	Lb/day	mol/L	Lb/day	Lb/day	Mt/day	g/sec
93	Total	1.46E-11	1.07E-11	9.18E-04	3.46E-03	0.00E+00	0.00E+00	4.38E-03	1.99E-06	2.30E-05
94	$C_2O_4^{-2}$	1.46E-11	1.07E-11	9.18E-04	3.46E-03	0.00E+00	0.00E+00	4.38E-03	1.99E-06	2.30E-05
95	Formate	1.98E-18	7.46E-19	6.39E-11	7.80E-10	0.00E+00	0.00E+00	8.44E-10	3.84E-13	4.44E-12
96	Acetate	1.54E-18	7.58E-19	6.50E-11	7.93E-10	0.00E+00	0.00E+00	8.58E-10	3.90E-13	4.51E-12
97	Glycolate	1.02E-17	6.41E-18	5.50E-10	7.85E-10	0.00E+00	0.00E+00	1.33E-09	6.06E-13	7.02E-12
98	IDA	5.17E-18	5.75E-18	4.93E-10	2.45E-10	0.00E+00	0.00E+00	7.38E-10	3.35E-13	3.88E-12
99	Citrate	4.73E-19	7.58E-19	6.50E-11	3.14E-10	0.00E+00	0.00E+00	3.79E-10	1.72E-13	2.00E-12
100	HEDTA	2.21E-18	5.14E-18	4.41E-10	2.95E-10	0.00E+00	0.00E+00	7.36E-10	3.35E-13	3.87E-12
101	EDTA	2.66E-19	6.49E-19	5.57E-11	3.01E-10	0.00E+00	0.00E+00	3.57E-10	1.62E-13	1.88E-12
102										
103	Rad. Comp	Aqueous Rad. Comp			Solids Rad. Comp (1)			Total Rad. Comp (1)		
104	Unit	Ci/L	Ci/day	Lb/day	Ci/L	Ci/day	Lb/day	Ci/L	Ci/day	Lb/day
105	Total	1.18E-09	3.83E-01	5.54E-04	9.23E-10	3.00E-01	3.61E-03	2.10E-09	6.83E-01	4.17E-03
106	^{241}Am	2.59E-13	8.41E-05	5.41E-08	6.60E-12	2.14E-03	1.38E-06	6.86E-12	2.23E-03	1.43E-06
107	^{243}Am	1.69E-16	5.49E-08	6.07E-10	5.33E-16	1.73E-07	1.91E-09	7.02E-16	2.28E-07	2.52E-09
108	^{14}C	9.10E-15	2.95E-06	1.46E-09	7.76E-16	2.52E-07	1.24E-10	9.88E-15	3.21E-06	1.58E-09
109	^{60}Co	5.97E-14	1.94E-05	3.78E-11	1.21E-12	3.94E-04	7.67E-10	1.27E-12	4.13E-04	8.05E-10
110	^{243}Cm	4.80E-17	1.56E-08	6.79E-13	1.53E-14	4.98E-06	2.17E-10	1.54E-14	5.00E-06	2.18E-10
111	^{244}Cm	1.14E-15	3.69E-07	1.00E-11	3.49E-13	1.13E-04	3.09E-09	3.50E-13	1.14E-04	3.10E-09
112	^{137}Cs	1.09E-09	3.54E-01	8.99E-06	1.43E-10	4.64E-02	1.18E-06	1.23E-09	4.00E-01	1.02E-05
113	^{152}Eu	1.95E-15	6.33E-07	8.03E-12	3.51E-14	1.14E-05	1.45E-10	3.71E-14	1.20E-05	1.53E-10
114	^{154}Eu	4.04E-13	1.31E-04	1.07E-09	3.81E-12	1.24E-03	1.01E-08	4.21E-12	1.37E-03	1.11E-08
115	^{155}Eu	1.17E-13	3.80E-05	1.72E-10	5.64E-13	1.83E-04	8.30E-10	6.81E-13	2.21E-04	1.00E-09
116	^{3}H	4.51E-14	1.46E-05	3.36E-12	8.22E-12	2.67E-03	6.12E-10	8.26E-12	2.68E-03	6.15E-10
117	^{129}I	3.54E-16	1.15E-07	1.44E-06	7.66E-17	2.49E-08	3.10E-07	4.31E-16	1.40E-07	1.75E-06
118	^{63}Ni	6.42E-13	2.08E-04	8.08E-09	1.32E-13	4.30E-05	1.67E-09	7.74E-13	2.51E-04	9.75E-09
119	^{237}Np	3.52E-16	1.14E-07	3.57E-07	8.99E-15	2.92E-06	9.12E-06	9.34E-15	3.03E-06	9.48E-06
120	^{238}Pu	1.16E-15	3.76E-07	4.84E-11	2.57E-14	8.32E-06	1.07E-09	2.68E-14	8.70E-06	1.12E-09
121	^{239}Pu	1.60E-14	5.21E-06	1.85E-07	2.27E-13	7.37E-05	2.62E-06	2.43E-13	7.90E-05	2.81E-06
122	^{240}Pu	4.16E-15	1.35E-06	1.31E-08	6.00E-14	1.95E-05	1.89E-07	6.41E-14	2.08E-05	2.02E-07
123	^{241}Pu	8.73E-14	2.83E-05	6.06E-10	1.61E-12	5.22E-04	1.12E-08	1.70E-12	5.51E-04	1.18E-08
124	^{242}Pu	3.15E-20	1.02E-11	5.73E-12	5.53E-18	1.80E-09	1.01E-09	5.56E-18	1.81E-09	1.01E-09
125	^{125}Sb	2.42E-13	7.86E-05	1.67E-10	2.35E-12	7.61E-04	1.62E-09	2.59E-12	8.40E-04	1.78E-09
126	^{151}Sm	3.39E-12	1.10E-03	9.21E-08	2.83E-11	9.18E-03	7.69E-07	3.17E-11	1.03E-02	8.61E-07
127	^{126}Sn	3.85E-15	1.25E-06	2.43E-07	1.10E-14	3.57E-06	6.93E-07	1.48E-14	4.82E-06	9.36E-07
128	^{90}Sr	8.35E-11	2.71E-02	4.32E-07	7.24E-10	2.35E-01	3.75E-06	8.07E-10	2.62E-01	4.18E-06
129	^{99}Tc	1.15E-12	3.72E-04	4.84E-05	2.89E-12	9.39E-04	1.22E-04	4.04E-12	1.31E-03	1.70E-04
130	^{232}Th	1.07E-17	3.47E-09	6.96E-05	2.97E-16	9.64E-08	1.93E-03	3.08E-16	9.99E-08	2.00E-03
131	^{233}U	3.57E-16	1.16E-07	2.65E-08	2.44E-14	7.90E-06	1.81E-06	2.47E-14	8.02E-06	1.83E-06
132	^{234}U	2.53E-15	8.21E-08	2.92E-08	1.27E-15	4.11E-07	1.46E-07	1.52E-15	4.93E-07	1.75E-07
133	^{235}U	9.97E-18	3.23E-09	3.30E-06	3.04E-17	9.86E-09	1.01E-05	4.04E-17	1.31E-08	1.34E-05
134	^{236}U	1.71E-17	5.54E-09	1.89E-07	4.18E-17	1.36E-08	4.63E-07	5.89E-17	1.91E-08	6.52E-07
135	^{238}U	1.98E-16	6.42E-08	4.21E-04	7.16E-16	2.32E-07	1.53E-03	9.14E-16	2.97E-07	1.95E-03
136	(1) All radionuclides in gaseous streams are assumed to exist as solid particulate.									

Table C-21 PVP12 Stream Report

Stream Number:	PVP12
Stream Name:	Carbon bed adsorber discharge
Configuration:	MRQ-05-0049.acmf
Run Date / Time:	12/14/2005 - 1:42:25 PM
Run Data File:	H:\ACM v3.1\MRQ-05-0049\MRQ_05_0049A_Streams.csv

Stream Properties

Variable	Value	Units	
Density	9.01E-04	g/cm^3	(does not include solid phase)
Enthalpy	-3.82E+06	BTU/hr	
Mass Flow	3.25E+04	Lb/hr	
	7.81E+05	Lb/day	
Volumetric Flow	7.21E+04	GPM	(does not include solid phase)
	9.64E+03	ft^3/min	(does not include solid phase)
Molar Flow	1.14E+03	Lbmol/hr	
Molecular Weight	2.85E+01	Lb/Lbmol	
Pressure	8.10E+02	mbar	
Temperature	3.49E+01	C	
Na Molarity	0.00E+00	mol/L	
pH	1.02E+01	pH	
Total TRU	5.47E-20	Ci/L	
Total Activity	5.84E-12	Ci/L	

Component	Aqueous Comp			Solid Comp	Gaseous (1)		Total Comp		
Unit	mol/L	Lb/gal	Lb/day	Lb/day	mol/L	Lb/day	Lb/day	mt/day	g/sec
Total	6.85E-11	1.92E-12	1.77E-04	4.34E-05	3.16E-02	7.81E+05	7.81E+05	3.55E+02	4.11E+03
Ag^+	3.05E-22	2.75E-22	2.85E-14	1.17E-13	0.00E+00	0.00E+00	1.45E-13	6.61E-17	7.65E-16
Al^{+3}	2.91E-18	6.55E-19	6.80E-11	1.36E-11	0.00E+00	0.00E+00	8.15E-11	3.71E-14	4.29E-13
As^{+3}	1.23E-21	7.69E-22	7.99E-14	1.37E-14	0.00E+00	0.00E+00	9.36E-14	4.25E-17	4.92E-16
B^{+3}	2.17E-20	1.96E-21	2.03E-13	3.44E-12	0.00E+00	0.00E+00	3.64E-12	1.66E-15	1.92E-14
Ba^{+2}	2.90E-22	3.32E-22	3.45E-14	1.08E-13	0.00E+00	0.00E+00	1.42E-13	6.45E-17	7.47E-16
Bi^{+3}	1.77E-22	3.09E-22	3.20E-14	3.03E-13	0.00E+00	0.00E+00	3.35E-13	1.52E-16	1.76E-15
Ca^{+2}	4.45E-19	1.49E-19	1.54E-11	2.21E-11	0.00E+00	0.00E+00	3.76E-11	1.71E-14	1.98E-13
Cd^{+2}	2.87E-22	2.69E-22	2.79E-14	2.38E-13	0.00E+00	0.00E+00	2.66E-13	1.21E-16	1.40E-15
Ce^{+3}	1.11E-20	1.30E-20	1.35E-12	1.22E-13	0.00E+00	0.00E+00	1.48E-12	6.71E-16	7.76E-15
Cl^-	3.85E-19	1.14E-19	1.18E-11	7.73E-14	0.00E+00	0.00E+00	1.19E-11	5.41E-15	6.26E-14
CO	1.30E-38	3.04E-39	3.15E-31	0.00E+00	1.13E-71	2.73E-64	3.15E-31	1.43E-34	1.66E-33
CO_2	0.00E+00	0.00E+00	0.00E+00	0.00E+00	1.12E-12	4.28E-05	4.28E-05	1.95E-08	2.25E-07
CO_3^{-2}	2.71E-18	1.36E-18	1.41E-10	1.30E-11	0.00E+00	0.00E+00	1.54E-10	7.00E-14	8.10E-13
Cr^{+3}	4.77E-20	2.07E-20	2.15E-12	2.04E-13	0.00E+00	0.00E+00	2.35E-12	1.07E-15	1.24E-14
Cu^{+2}	5.16E-22	2.74E-22	2.84E-14	4.42E-14	0.00E+00	0.00E+00	7.26E-14	3.30E-17	3.82E-16
F^-	1.66E-19	2.63E-20	2.74E-12	1.28E-12	0.00E+00	0.00E+00	4.02E-12	1.83E-15	2.11E-14
Fe^{+3}	1.67E-20	7.79E-21	8.09E-13	1.76E-11	0.00E+00	0.00E+00	1.84E-11	8.37E-15	9.69E-14
H_2O	0.00E+00	0.00E+00	0.00E+00	0.00E+00	1.06E-03	1.65E+04	1.65E+04	7.49E+00	8.67E+01
$H_2O(b)$	0.00E+00	0.00E+00	0.00E+00	0.00E+00	0.00E+00	0.00E+00	0.00E+00	0.00E+00	0.00E+00
H^+	6.35E-11	5.34E-13	5.55E-05	0.00E+00	0.00E+00	0.00E+00	5.55E-05	2.52E-08	2.92E-07
HCL	0.00E+00	0.00E+00	0.00E+00	0.00E+00	2.37E-35	7.49E-28	7.49E-28	3.40E-31	3.94E-30
HCO3-	2.41E-24	1.23E-24	1.27E-16	0.00E+00	0.00E+00	0.00E+00	1.27E-16	5.79E-20	6.70E-19
H2CO3	6.60E-28	3.42E-28	3.55E-20	0.00E+00	0.00E+00	0.00E+00	3.55E-20	1.61E-23	1.87E-22
HF	0.00E+00	0.00E+00	0.00E+00	0.00E+00	3.11E-36	5.39E-29	5.39E-29	2.45E-32	2.84E-31
Hg^{+2}	6.92E-14	1.16E-13	1.20E-05	4.34E-05	0.00E+00	0.00E+00	5.55E-05	2.52E-08	2.92E-07
HNO_3	0.00E+00	0.00E+00	0.00E+00	0.00E+00	2.88E-34	1.57E-26	1.57E-26	7.15E-30	8.28E-29
K^+	8.32E-19	2.72E-19	2.82E-11	2.14E-13	0.00E+00	0.00E+00	2.84E-11	1.29E-14	1.49E-13
La^{+3}	1.31E-22	1.52E-22	1.58E-14	1.79E-13	0.00E+00	0.00E+00	1.95E-13	8.86E-17	1.03E-15
Li^+	1.74E-20	1.01E-21	1.05E-13	8.02E-14	0.00E+00	0.00E+00	1.85E-13	8.40E-17	9.72E-16
Mg^{+2}	3.92E-20	7.95E-21	8.25E-13	2.65E-12	0.00E+00	0.00E+00	3.47E-12	1.58E-15	1.83E-14
Mn^{+3}	4.34E-21	1.99E-21	2.07E-13	1.44E-12	0.00E+00	0.00E+00	1.65E-12	7.49E-16	8.67E-15
MnO_4^-	0.00E+00	0.00E+00	0.00E+00	0.00E+00	0.00E+00	0.00E+00	0.00E+00	0.00E+00	0.00E+00
N_2	2.62E-12	8.13E-13	6.37E-05	0.00E+00	2.41E-02	5.86E+05	5.86E+05	2.66E+02	3.08E+03
Na^+	2.22E-17	4.26E-18	4.43E-10	1.44E-11	0.00E+00	0.00E+00	4.57E-10	2.08E-13	2.40E-12
NH3	1.51E-12	2.14E-13	2.22E-05	0.00E+00	3.47E-11	5.12E-04	5.34E-04	2.43E-07	2.81E-06
NH4+	8.31E-16	2.14E-13	1.30E-08	0.00E+00	0.00E+00	0.00E+00	1.30E-08	5.91E-12	6.83E-11
Ni^{+2}	4.06E-21	1.99E-21	2.06E-13	3.87E-13	0.00E+00	0.00E+00	5.93E-13	2.70E-16	3.12E-15
NO	7.86E-36	1.97E-36	2.04E-28	0.00E+00	0.00E+00	0.00E+00	2.04E-28	9.29E-32	1.07E-30
NO_2	0.00E+00	0.00E+00	0.00E+00	0.00E+00	3.97E-50	1.58E-42	1.58E-42	7.19E-46	8.32E-45
NO_2^-	4.36E-16	1.67E-18	1.74E-10	3.60E-12	0.00E+00	0.00E+00	1.77E-10	8.06E-14	9.33E-13
NO_3^-	8.81E-18	4.56E-18	4.73E-10	2.83E-12	0.00E+00	0.00E+00	4.76E-10	2.16E-13	2.51E-12
O_2	8.45E-13	2.26E-13	2.34E-05	0.00E+00	6.42E-03	1.78E+05	1.78E+05	8.09E+01	9.36E+02
$O^=$	0.00E+00	0.00E+00	0.00E+00	1.51E-11	0.00E+00	0.00E+00	1.51E-11	6.87E-15	7.95E-14
OH^-	2.08E-17	2.95E-18	3.06E-10	5.37E-11	0.00E+00	0.00E+00	3.60E-10	1.64E-13	1.89E-12
$OH(b)^-$	3.28E-25	4.66E-26	4.84E-18	1.49E-27	0.00E+00	0.00E+00	4.84E-18	2.20E-21	2.55E-20

CALCULATION SHEET

BY: E. Barrios
DATE: 12/22/05

PROJECT: WTP
JOB NO.: 24590
CALC NO.: 24590-WTP-M4C-FRP-00003
SHEET REV: D
SHEET NO.: C-43

SUBJECT: Integrated Baseline Emissions Report Non-SSFM Represented Constituents Emissions Rate Estimation

	A	B	C	D	E	F	G	H	I	J
74	Pb^{+2}	1.01E-21	1.75E-21	1.82E-13	4.96E-13	0.00E+00	0.00E+00	6.77E-13	3.08E-16	3.58E-15
75	Pd^{+2}	7.99E-23	7.09E-23	7.37E-15	2.07E-14	0.00E+00	0.00E+00	2.81E-14	1.28E-17	1.48E-16
76	PO_4^{-3}	1.38E-19	1.10E-19	1.14E-11	3.81E-12	0.00E+00	0.00E+00	1.52E-11	6.90E-15	7.99E-14
77	Resin	0.00E+00	0.00E+00	0.00E+00	0.00E+00	0.00E+00	0.00E+00	0.00E+00	0.00E+00	0.00E+00
78	Rh^{+3}	7.54E-23	6.48E-23	6.72E-15	6.58E-15	0.00E+00	0.00E+00	1.33E-14	6.05E-18	7.00E-17
79	Ru^{+3}	1.12E-22	9.45E-23	9.81E-15	5.96E-14	0.00E+00	0.00E+00	6.94E-14	3.16E-17	3.65E-16
80	S^{+6}	0.00E+00	0.00E+00	0.00E+00	2.46E-28	0.00E+00	0.00E+00	2.46E-28	1.12E-31	1.29E-30
81	SiO2	4.61E-20	2.31E-20	2.40E-12	1.32E-11	0.00E+00	0.00E+00	1.56E-11	7.08E-15	8.19E-14
82	SiO_4^{-4}	2.54E-27	1.95E-27	2.03E-19	1.96E-18	0.00E+00	0.00E+00	2.18E-18	9.90E-22	1.15E-20
83	SO_2	7.59E-38	4.06E-38	4.21E-30	0.00E+00	0.00E+00	0.00E+00	4.21E-30	1.91E-33	2.22E-32
84	SO_4^{-2}	2.11E-19	1.69E-19	1.76E-11	8.60E-13	0.00E+00	0.00E+00	1.84E-11	8.37E-15	9.69E-14
85	Sr^{+2}	4.05E-23	2.96E-23	3.07E-15	3.21E-14	0.00E+00	0.00E+00	3.52E-14	1.60E-17	1.85E-16
86	Sucrose	0.00E+00	0.00E+00	0.00E+00	3.09E-45	0.00E+00	0.00E+00	3.09E-45	1.40E-48	1.62E-47
87	Ti^{+4}	2.42E-22	9.66E-23	1.00E-14	3.88E-14	0.00E+00	0.00E+00	4.88E-14	2.22E-17	2.57E-16
88	Zn^{+2}	8.22E-22	4.49E-22	4.66E-14	7.91E-13	0.00E+00	0.00E+00	8.38E-13	3.81E-16	4.41E-15
89	Zr^{+4}	6.67E-22	5.08E-22	5.27E-14	4.36E-12	0.00E+00	0.00E+00	4.41E-12	2.01E-15	2.32E-14
90										
91	Components	Aqueous Comp			Solid Comp	Gaseous		Total Comp		
92	Unit	mol/L	Lb/gal	Lb/day	Lb/day	mol/L	Lb/day	Lb/day	Mt/day	g/sec
93	Total	4.30E-22	3.16E-22	3.28E-14	1.24E-13	0.00E+00	0.00E+00	1.56E-13	7.10E-17	8.22E-16
94	$C_2O_4^{-2}$	4.30E-22	3.16E-22	3.28E-14	1.24E-13	0.00E+00	0.00E+00	1.56E-13	7.10E-17	8.22E-16
95	Formate	6.83E-29	2.57E-29	2.66E-21	3.25E-20	0.00E+00	0.00E+00	3.52E-20	1.60E-23	1.85E-22
96	Acetate	5.29E-29	2.61E-29	2.71E-21	3.30E-20	0.00E+00	0.00E+00	3.57E-20	1.62E-23	1.88E-22
97	Glycolate	3.52E-28	2.21E-28	2.29E-20	3.27E-20	0.00E+00	0.00E+00	5.56E-20	2.53E-23	2.92E-22
98	IDA	1.78E-28	1.98E-28	2.05E-20	1.02E-20	0.00E+00	0.00E+00	3.07E-20	1.40E-23	1.62E-22
99	Citrate	1.63E-29	2.61E-29	2.71E-21	1.31E-20	0.00E+00	0.00E+00	1.58E-20	7.18E-24	8.31E-23
100	HEDTA	7.62E-29	1.77E-28	1.84E-20	1.23E-20	0.00E+00	0.00E+00	3.07E-20	1.39E-23	1.61E-22
101	EDTA	9.15E-30	2.23E-29	2.32E-21	1.25E-20	0.00E+00	0.00E+00	1.49E-20	6.76E-24	7.82E-23
102										
103	Rad. Comp	Aqueous Rad. Comp			Solids Rad. Comp (1)			Total Rad. Comp (1)		
104	Unit	Ci/L	Ci/day	Lb/day	Ci/L	Ci/day	Lb/day	Ci/L	Ci/day	Lb/day
105	Total	3.83E-14	1.50E-05	4.12E-07	5.60E-12	2.20E-03	8.93E-08	5.64E-12	2.22E-03	5.01E-07
106	^{241}Am	1.53E-21	6.01E-13	3.87E-16	3.89E-20	1.53E-11	9.85E-15	4.05E-20	1.59E-11	1.02E-14
107	^{243}Am	9.98E-25	3.92E-16	4.33E-18	3.14E-24	1.24E-15	1.37E-17	4.14E-24	1.63E-15	1.80E-17
108	^{14}C	7.51E-15	2.95E-06	1.46E-09	6.41E-16	2.52E-07	1.24E-10	8.15E-15	3.21E-06	1.58E-09
109	^{60}Co	3.52E-22	1.38E-13	2.70E-19	7.15E-21	2.81E-12	5.48E-18	7.51E-21	2.95E-12	5.75E-18
110	^{243}Cm	3.00E-25	1.18E-16	5.14E-21	9.05E-23	3.56E-14	1.55E-18	9.08E-23	3.57E-14	1.56E-18
111	^{244}Cm	6.70E-24	2.63E-15	7.17E-20	2.06E-21	8.09E-13	2.20E-17	2.06E-21	8.12E-13	2.21E-17
112	^{137}Cs	6.43E-18	2.53E-09	6.42E-14	8.43E-19	3.31E-10	8.42E-15	7.27E-18	2.86E-09	7.26E-14
113	^{152}Eu	1.15E-23	4.52E-15	5.74E-20	2.07E-22	8.14E-14	1.03E-18	2.19E-22	8.59E-14	1.09E-18
114	^{154}Eu	2.38E-21	9.37E-13	7.65E-18	2.24E-20	8.82E-12	7.20E-17	2.48E-20	9.76E-12	7.96E-17
115	^{155}Eu	6.90E-22	2.71E-13	1.23E-18	3.32E-21	1.31E-12	5.93E-18	4.01E-21	1.58E-12	7.16E-18
116	^{3}H	3.07E-14	1.21E-05	2.77E-12	5.60E-12	2.20E-03	5.05E-10	5.63E-12	2.21E-03	5.08E-10
117	^{129}I	8.36E-17	3.29E-08	4.10E-07	1.81E-17	7.10E-09	8.87E-08	1.02E-16	4.00E-08	4.99E-07
118	^{63}Ni	3.78E-21	1.49E-12	5.77E-17	7.81E-22	3.07E-13	1.19E-17	4.56E-21	1.79E-12	6.96E-17
119	^{237}Np	2.06E-24	8.16E-16	2.55E-15	5.30E-23	2.08E-14	6.52E-14	5.51E-23	2.16E-14	6.77E-14
120	^{238}Pu	6.84E-24	2.69E-15	3.46E-19	1.51E-22	5.95E-14	7.66E-18	1.58E-22	6.22E-14	8.00E-18
121	^{239}Pu	9.46E-23	3.72E-14	1.32E-15	1.34E-21	5.27E-13	1.87E-14	1.43E-21	5.64E-13	2.00E-14
122	^{240}Pu	2.45E-23	9.64E-15	9.36E-17	3.54E-22	1.39E-13	1.35E-15	3.78E-22	1.49E-13	1.44E-15
123	^{241}Pu	5.15E-22	2.02E-13	4.33E-18	9.49E-21	3.73E-12	7.99E-17	1.00E-20	3.93E-12	8.42E-17
124	^{242}Pu	1.97E-28	7.76E-20	4.34E-20	3.26E-26	1.28E-17	7.18E-18	3.28E-26	1.29E-17	7.22E-18
125	^{125}Sb	1.43E-21	5.62E-13	1.19E-18	1.38E-20	5.44E-12	1.16E-17	1.53E-20	6.00E-12	1.27E-17
126	^{151}Sm	2.00E-20	7.85E-12	6.58E-16	1.67E-19	6.56E-11	5.49E-15	1.87E-19	7.34E-11	6.15E-15
127	^{126}Sn	2.27E-23	8.93E-15	1.73E-15	6.48E-23	2.55E-14	4.95E-15	8.76E-23	3.44E-14	6.68E-15
128	^{90}Sr	4.92E-19	1.94E-10	3.09E-15	4.27E-18	1.68E-09	2.68E-14	4.76E-18	1.87E-09	2.99E-14
129	^{99}Tc	6.76E-21	2.66E-12	3.46E-13	1.71E-20	6.71E-12	8.72E-13	2.38E-20	9.36E-12	1.22E-12
130	^{232}Th	6.69E-26	2.63E-17	5.27E-13	1.75E-24	6.89E-16	1.38E-11	1.82E-24	7.15E-16	1.43E-11
131	^{233}U	2.10E-24	8.27E-16	1.89E-16	1.44E-22	5.64E-14	1.29E-14	1.46E-22	5.73E-14	1.31E-14
132	^{234}U	1.49E-24	5.87E-16	2.08E-16	7.47E-24	2.93E-15	1.04E-15	8.96E-24	3.52E-15	1.25E-15
133	^{235}U	6.23E-26	2.45E-17	2.50E-14	1.90E-25	7.49E-17	7.64E-14	2.53E-25	9.94E-17	1.01E-13
134	^{236}U	1.07E-25	4.20E-17	1.43E-15	2.61E-25	1.03E-16	3.50E-15	3.68E-25	1.45E-16	4.94E-15
135	^{238}U	1.17E-24	4.58E-16	3.01E-12	4.22E-24	1.66E-15	1.09E-11	5.39E-24	2.12E-15	1.39E-11
136	(1) All radionuclides in gaseous streams are assumed to exist as solid particulate.									

CALCULATION SHEET

BY: E. Bernos
DATE: 12/22/05

PROJECT: WTP
JOB NO.: 24590
CALC NO.: 24590-WTP-M4C-FRP-00003
SHEET REV: D
SHEET NO.: C-44

SUBJECT: Integrated Baseline Emissions Report Non-SSFM Represented Constituents Emissions Rate Estimation

	A	B	C	D	E	F	G	H	I	J
1	**Table C-22 RLD32 Stream Report**									
3	Stream Number:		RLD32							
4	Stream Name:		LAW SBS condensate vessel vent							
5	Configuration:		MRQ-05-0049.acmf							
6	Run Date / Time:		12/14/2005 - 1:42:25 PM							
7	Run Data File:		H:\ACM v3.1\MRQ-05-0049\MRQ_05_0049A_Streams.csv							
8										
9	Stream Properties									
10	Variable	Value	Units							
11	Density	1.13E-03	g/cm^3	(does not include solid phase)						
12	Enthalpy	-6.80E+03	BTU/hr							
13	Mass Flow	4.42E+01	Lb/hr							
14		1.06E+03	Lb/day							
15	Volumetric Flow	7.63E+01	GPM	(does not include solid phase)						
16		1.05E+01	ft^3/min	(does not include solid phase)						
17	Molar Flow	1.56E+00	Lbmol/hr							
18	Molecular Weight	2.84E+01	Lb/Lbmol							
19	Pressure	1.00E+03	mbar							
20	Temperature	3.00E+01	C							
21	Na Molarity	0.00E+00	mol/L							
22	pH	3.75E+00	pH							
23	Total TRU	6.19E-15	Ci/L							
24	Total Activity	2.06E-12	Ci/L							
25										
26	Component	Aqueous Comp			Solid Comp	Gaseous (1)		Total Comp		
27	Unit	mol/L	Lb/gal	Lb/day	Lb/day	mol/L	Lb/day	Lb/day	mt/day	g/sec
28	Total	5.25E-08	7.90E-09	8.91E-04	7.57E-06	3.97E-02	1.06E+03	1.06E+03	4.82E-01	5.58E+00
29	Ag^+	0.00E+00	0.00E+00	0.00E+00	1.54E-10	0.00E+00	0.00E+00	1.54E-10	6.98E-14	8.08E-13
30	Al^{+3}	0.00E+00	0.00E+00	0.00E+00	3.62E-07	0.00E+00	0.00E+00	3.62E-07	1.65E-10	1.91E-09
31	As^{+3}	0.00E+00	0.00E+00	0.00E+00	2.72E-09	0.00E+00	0.00E+00	2.72E-09	1.24E-12	1.43E-11
32	B^{+3}	0.00E+00	0.00E+00	0.00E+00	1.12E-06	0.00E+00	0.00E+00	1.12E-06	5.11E-10	5.92E-09
33	Ba^{+2}	0.00E+00	0.00E+00	0.00E+00	5.32E-11	0.00E+00	0.00E+00	5.32E-11	2.42E-14	2.80E-13
34	Bi^{+3}	0.00E+00	0.00E+00	0.00E+00	1.18E-10	0.00E+00	0.00E+00	1.18E-10	5.38E-14	6.23E-13
35	Ca^{+2}	3.25E-12	1.09E-12	1.23E-07	3.06E-07	0.00E+00	0.00E+00	4.28E-07	1.95E-10	2.25E-09
36	Cd^{+2}	0.00E+00	0.00E+00	0.00E+00	1.05E-09	0.00E+00	0.00E+00	1.05E-09	4.75E-13	5.50E-12
37	Ce^{+3}	0.00E+00	0.00E+00	0.00E+00	1.20E-09	0.00E+00	0.00E+00	1.20E-09	5.45E-13	6.31E-12
38	Cl^-	1.23E-11	3.63E-12	4.10E-07	0.00E+00	0.00E+00	0.00E+00	4.10E-07	1.86E-10	2.16E-09
39	CO	0.00E+00	0.00E+00	0.00E+00	0.00E+00	0.00E+00	0.00E+00	0.00E+00	0.00E+00	0.00E+00
40	CO_2	1.32E-14	4.85E-15	5.47E-10	0.00E+00	1.19E-27	4.92E-23	5.47E-10	2.49E-13	2.88E-12
41	CO_3^{-2}	2.98E-12	1.49E-12	1.68E-07	0.00E+00	0.00E+00	0.00E+00	1.68E-07	7.64E-11	8.85E-10
42	Cr^{+3}	0.00E+00	0.00E+00	0.00E+00	1.68E-08	0.00E+00	0.00E+00	1.68E-08	7.66E-12	8.86E-11
43	Cu^{+2}	0.00E+00	0.00E+00	0.00E+00	2.23E-11	0.00E+00	0.00E+00	2.23E-11	1.01E-14	1.17E-13
44	F^-	6.91E-12	1.09E-12	1.23E-07	0.00E+00	0.00E+00	0.00E+00	1.23E-07	5.61E-11	6.50E-10
45	Fe^{+3}	0.00E+00	0.00E+00	0.00E+00	2.27E-07	0.00E+00	0.00E+00	2.27E-07	1.03E-10	1.20E-09
46	H_2O	5.23E-08	7.87E-09	8.87E-04	0.00E+00	1.69E-03	2.87E+01	2.87E+01	1.30E-02	1.51E-01
47	$H_2O(b)$	0.00E+00	0.00E+00	0.00E+00	0.00E+00	0.00E+00	0.00E+00	0.00E+00	0.00E+00	0.00E+00
48	H^+	1.78E-22	1.50E-24	1.69E-19	0.00E+00	0.00E+00	0.00E+00	1.69E-19	7.68E-23	8.89E-22
49	HCL	0.00E+00	0.00E+00	0.00E+00	0.00E+00	0.00E+00	0.00E+00	0.00E+00	0.00E+00	0.00E+00
50	HCO3-	0.00E+00	0.00E+00	0.00E+00	3.25E-23	0.00E+00	0.00E+00	3.25E-23	1.48E-26	1.71E-25
51	H2CO3	0.00E+00	0.00E+00	0.00E+00	0.00E+00	0.00E+00	0.00E+00	0.00E+00	0.00E+00	0.00E+00
52	HF	0.00E+00	0.00E+00	0.00E+00	0.00E+00	0.00E+00	0.00E+00	0.00E+00	0.00E+00	0.00E+00
53	Hg^{+2}	0.00E+00	0.00E+00	0.00E+00	3.99E-08	0.00E+00	0.00E+00	3.99E-08	1.81E-11	2.10E-10
54	HNO_3	0.00E+00	0.00E+00	0.00E+00	0.00E+00	0.00E+00	0.00E+00	0.00E+00	0.00E+00	0.00E+00
55	K^+	9.69E-12	3.16E-12	3.56E-07	0.00E+00	0.00E+00	0.00E+00	3.56E-07	1.62E-10	1.88E-09
56	La^{+3}	0.00E+00	0.00E+00	0.00E+00	5.56E-11	0.00E+00	0.00E+00	5.56E-11	2.53E-14	2.92E-13
57	Li^+	7.20E-12	4.17E-13	4.70E-08	4.17E-08	0.00E+00	0.00E+00	8.87E-08	4.03E-11	4.67E-10
58	Mg^{+2}	0.00E+00	0.00E+00	0.00E+00	5.75E-08	0.00E+00	0.00E+00	5.75E-08	2.61E-11	3.02E-10
59	Mn^{+3}	0.00E+00	0.00E+00	0.00E+00	2.20E-09	0.00E+00	0.00E+00	2.20E-09	9.98E-13	1.16E-11
60	MnO_4^-	0.00E+00	0.00E+00	0.00E+00	0.00E+00	0.00E+00	0.00E+00	0.00E+00	0.00E+00	0.00E+00
61	N_2	0.00E+00	0.00E+00	0.00E+00	0.00E+00	3.00E-02	7.91E+02	7.91E+02	3.60E-01	4.16E+00
62	Na^+	5.86E-11	1.12E-11	1.27E-06	0.00E+00	0.00E+00	0.00E+00	1.27E-06	5.77E-10	6.67E-09
63	NH3	5.24E-12	7.45E-13	8.40E-08	0.00E+00	0.00E+00	0.00E+00	8.40E-08	3.82E-11	4.42E-10
64	NH4+	1.76E-15	7.45E-13	2.99E-11	1.43E-24	0.00E+00	0.00E+00	2.99E-11	1.36E-14	1.57E-13
65	Ni^{+2}	0.00E+00	0.00E+00	0.00E+00	1.98E-09	0.00E+00	0.00E+00	1.98E-09	8.99E-13	1.04E-11
66	NO	0.00E+00	0.00E+00	0.00E+00	0.00E+00	0.00E+00	0.00E+00	0.00E+00	0.00E+00	0.00E+00
67	NO_2	0.00E+00	0.00E+00	0.00E+00	0.00E+00	0.00E+00	0.00E+00	0.00E+00	0.00E+00	0.00E+00
68	NO_2^-	0.00E+00	0.00E+00	0.00E+00	0.00E+00	0.00E+00	0.00E+00	0.00E+00	0.00E+00	0.00E+00
69	NO_3^-	0.00E+00	0.00E+00	0.00E+00	0.00E+00	0.00E+00	0.00E+00	0.00E+00	0.00E+00	0.00E+00
70	O_2	0.00E+00	0.00E+00	0.00E+00	0.00E+00	7.98E-03	2.40E+02	2.40E+02	1.09E-01	1.26E+00
71	O^-	0.00E+00	0.00E+00	0.00E+00	3.28E-06	0.00E+00	0.00E+00	3.28E-06	1.49E-09	1.72E-08
72	OH^-	5.69E-11	8.07E-12	9.10E-07	0.00E+00	0.00E+00	0.00E+00	9.10E-07	4.14E-10	4.79E-09
73	$OH(b)^-$	0.00E+00	0.00E+00	0.00E+00	0.00E+00	0.00E+00	0.00E+00	0.00E+00	0.00E+00	0.00E+00

	A	B	C	D	E	F	G	H	I	J
74	Pb^{+2}	0.00E+00	0.00E+00	0.00E+00	6.58E-10	0.00E+00	0.00E+00	6.58E-10	2.99E-13	3.46E-12
75	Pd^{+2}	0.00E+00	0.00E+00	0.00E+00	1.07E-11	0.00E+00	0.00E+00	1.07E-11	4.87E-15	5.64E-14
76	PO_4^{-3}	0.00E+00	0.00E+00	0.00E+00	5.45E-08	0.00E+00	0.00E+00	5.45E-08	2.48E-11	2.87E-10
77	Resin	0.00E+00	0.00E+00	0.00E+00	0.00E+00	0.00E+00	0.00E+00	0.00E+00	0.00E+00	0.00E+00
78	Rh^{+3}	0.00E+00	0.00E+00	0.00E+00	3.83E-11	0.00E+00	0.00E+00	3.83E-11	1.74E-14	2.02E-13
79	Ru^{+3}	0.00E+00	0.00E+00	0.00E+00	9.13E-10	0.00E+00	0.00E+00	9.13E-10	4.15E-13	4.80E-12
80	S^{+6}	0.00E+00	0.00E+00	0.00E+00	0.00E+00	0.00E+00	0.00E+00	0.00E+00	0.00E+00	0.00E+00
81	SiO2	0.00E+00	0.00E+00	0.00E+00	1.70E-06	0.00E+00	0.00E+00	1.70E-06	7.71E-10	8.93E-09
82	SiO_4^{-4}	0.00E+00	0.00E+00	0.00E+00	9.12E-22	0.00E+00	0.00E+00	9.12E-22	4.15E-25	4.80E-24
83	SO_2	0.00E+00	0.00E+00	0.00E+00	0.00E+00	0.00E+00	0.00E+00	0.00E+00	0.00E+00	0.00E+00
84	SO_4^{-2}	0.00E+00	0.00E+00	0.00E+00	0.00E+00	0.00E+00	0.00E+00	0.00E+00	0.00E+00	0.00E+00
85	Sr^{+2}	5.47E-17	4.00E-17	4.51E-12	4.72E-12	0.00E+00	0.00E+00	9.24E-12	4.20E-15	4.86E-14
86	Sucrose	0.00E+00	0.00E+00	0.00E+00	0.00E+00	0.00E+00	0.00E+00	0.00E+00	0.00E+00	0.00E+00
87	Ti^{+4}	0.00E+00	0.00E+00	0.00E+00	5.23E-09	0.00E+00	0.00E+00	5.23E-09	2.38E-12	2.75E-11
88	Zn^{+2}	0.00E+00	0.00E+00	0.00E+00	2.69E-07	0.00E+00	0.00E+00	2.69E-07	1.22E-10	1.42E-09
89	Zr^{+4}	0.00E+00	0.00E+00	0.00E+00	8.27E-08	0.00E+00	0.00E+00	8.27E-08	3.76E-11	4.35E-10
90										
91	Components	Aqueous Comp			Solid Comp	Gaseous		Total Comp		
92	Unit	mol/L	Lb/gal	Lb/day	Lb/day	mol/L	Lb/day	Lb/day	Mt/day	g/sec
93	Total	0.00E+00	0.00E+00	0.00E+00	9.68E-06	0.00E+00	0.00E+00	9.68E-06	4.40E-09	5.09E-08
94	$C_2O_4^{-2}$	0.00E+00	0.00E+00	0.00E+00	9.68E-06	0.00E+00	0.00E+00	9.68E-06	4.40E-09	5.09E-08
95	Formate	0.00E+00	0.00E+00	0.00E+00	0.00E+00	0.00E+00	0.00E+00	0.00E+00	0.00E+00	0.00E+00
96	Acetate	0.00E+00	0.00E+00	0.00E+00	0.00E+00	0.00E+00	0.00E+00	0.00E+00	0.00E+00	0.00E+00
97	Glycolate	0.00E+00	0.00E+00	0.00E+00	0.00E+00	0.00E+00	0.00E+00	0.00E+00	0.00E+00	0.00E+00
98	IDA	0.00E+00	0.00E+00	0.00E+00	0.00E+00	0.00E+00	0.00E+00	0.00E+00	0.00E+00	0.00E+00
99	Citrate	0.00E+00	0.00E+00	0.00E+00	0.00E+00	0.00E+00	0.00E+00	0.00E+00	0.00E+00	0.00E+00
100	HEDTA	0.00E+00	0.00E+00	0.00E+00	0.00E+00	0.00E+00	0.00E+00	0.00E+00	0.00E+00	0.00E+00
101	EDTA	0.00E+00	0.00E+00	0.00E+00	0.00E+00	0.00E+00	0.00E+00	0.00E+00	0.00E+00	0.00E+00
102										
103	Rad. Comp	Aqueous Rad. Comp			Solids Rad. Comp (1)			Total Rad. Comp (1)		
104	Unit	Ci/L	Ci/day	Lb/day	Ci/L	Ci/day	Lb/day	Ci/L	Ci/day	Lb/day
105	Total	6.65E-13	2.84E-07	4.53E-12	1.40E-12	5.96E-07	3.24E-08	2.06E-12	8.80E-07	3.24E-08
106	^{241}Am	0.00E+00	0.00E+00	0.00E+00	5.30E-15	2.26E-09	1.46E-12	5.30E-15	2.26E-09	1.46E-12
107	^{243}Am	0.00E+00	0.00E+00	0.00E+00	3.45E-18	1.47E-12	1.63E-14	3.45E-18	1.47E-12	1.63E-14
108	^{14}C	0.00E+00	0.00E+00	0.00E+00	0.00E+00	0.00E+00	0.00E+00	0.00E+00	0.00E+00	0.00E+00
109	^{60}Co	0.00E+00	0.00E+00	0.00E+00	2.78E-16	1.19E-10	2.31E-16	2.78E-16	1.19E-10	2.31E-16
110	^{243}Cm	0.00E+00	0.00E+00	0.00E+00	2.42E-19	1.03E-13	4.50E-18	2.42E-19	1.03E-13	4.50E-18
111	^{244}Cm	0.00E+00	0.00E+00	0.00E+00	5.71E-18	2.44E-12	8.64E-17	5.71E-18	2.44E-12	8.64E-17
112	^{137}Cs	0.00E+00	0.00E+00	0.00E+00	1.38E-13	5.88E-08	1.49E-12	1.38E-13	5.88E-08	1.49E-12
113	^{152}Eu	0.00E+00	0.00E+00	0.00E+00	1.58E-17	6.75E-12	8.56E-17	1.58E-17	6.75E-12	8.56E-17
114	^{154}Eu	0.00E+00	0.00E+00	0.00E+00	3.27E-15	1.40E-09	1.14E-14	3.27E-15	1.40E-09	1.14E-14
115	^{155}Eu	0.00E+00	0.00E+00	0.00E+00	9.45E-16	4.03E-10	1.83E-15	9.45E-16	4.03E-10	1.83E-15
116	^{3}H	0.00E+00	0.00E+00	0.00E+00	7.43E-15	3.17E-09	7.27E-16	7.43E-15	3.17E-09	7.27E-16
117	^{129}I	0.00E+00	0.00E+00	0.00E+00	4.63E-17	1.98E-11	2.47E-10	4.63E-17	1.98E-11	2.47E-10
118	^{63}Ni	0.00E+00	0.00E+00	0.00E+00	1.13E-14	4.83E-09	1.87E-13	1.13E-14	4.83E-09	1.87E-13
119	^{237}Np	0.00E+00	0.00E+00	0.00E+00	1.66E-18	7.11E-13	2.22E-12	1.66E-18	7.11E-13	2.22E-12
120	^{238}Pu	0.00E+00	0.00E+00	0.00E+00	9.41E-18	4.02E-12	5.17E-16	9.41E-18	4.02E-12	5.17E-16
121	^{239}Pu	0.00E+00	0.00E+00	0.00E+00	1.30E-16	5.55E-11	1.97E-12	1.30E-16	5.55E-11	1.97E-12
122	^{240}Pu	0.00E+00	0.00E+00	0.00E+00	3.37E-17	1.44E-11	1.40E-13	3.37E-17	1.44E-11	1.40E-13
123	^{241}Pu	0.00E+00	0.00E+00	0.00E+00	7.08E-16	3.02E-10	6.47E-15	7.08E-16	3.02E-10	6.47E-15
124	^{242}Pu	0.00E+00	0.00E+00	0.00E+00	3.56E-21	1.52E-15	8.52E-16	3.56E-21	1.52E-15	8.52E-16
125	^{125}Sb	0.00E+00	0.00E+00	0.00E+00	4.82E-15	2.06E-09	4.37E-15	4.82E-15	2.06E-09	4.37E-15
126	^{151}Sm	0.00E+00	0.00E+00	0.00E+00	3.99E-15	1.70E-09	1.43E-13	3.99E-15	1.70E-09	1.43E-13
127	^{126}Sn	0.00E+00	0.00E+00	0.00E+00	3.10E-17	1.32E-11	2.57E-12	3.10E-17	1.32E-11	2.57E-12
128	^{90}Sr	6.65E-13	2.84E-07	4.53E-12	6.96E-13	2.97E-07	4.74E-12	1.36E-12	5.81E-07	9.27E-12
129	^{99}Tc	0.00E+00	0.00E+00	0.00E+00	5.25E-13	2.24E-07	2.91E-08	5.25E-13	2.24E-07	2.91E-08
130	^{232}Th	0.00E+00	0.00E+00	0.00E+00	4.99E-20	2.13E-14	4.27E-10	4.99E-20	2.13E-14	4.27E-10
131	^{233}U	0.00E+00	0.00E+00	0.00E+00	1.70E-18	7.26E-13	1.66E-13	1.70E-18	7.26E-13	1.66E-13
132	^{234}U	0.00E+00	0.00E+00	0.00E+00	1.19E-18	5.09E-13	1.81E-13	1.19E-18	5.09E-13	1.81E-13
133	^{235}U	0.00E+00	0.00E+00	0.00E+00	4.69E-20	2.00E-14	2.04E-11	4.69E-20	2.00E-14	2.04E-11
134	^{236}U	0.00E+00	0.00E+00	0.00E+00	8.03E-20	3.43E-14	1.17E-12	8.03E-20	3.43E-14	1.17E-12
135	^{238}U	0.00E+00	0.00E+00	0.00E+00	9.30E-19	3.97E-13	2.60E-09	9.30E-19	3.97E-13	2.60E-09
136	(1) All radionuclides in gaseous streams are assumed to exist as solid particulate.									

	A	B	C	D	E	F	G	H	I	J
1	**Table C-23 RLD33 Stream Report**									
3	Stream Number:		RLD33							
4	Stream Name:		LAW Plant wash vessel vent							
5	Configuration:		MRQ-05-0049.acmf							
6	Run Date / Time:		12/14/2005 - 1:42:25 PM							
7	Run Data File:		H:\ACM v3.1\MRQ-05-0049\MRQ_05_0049A_Streams.csv							
8										
10	Variable	Value	Units							
11	Density	1.13E-03	g/cm^3	(does not include solid phase)						
12	Enthalpy	-3.83E+02	BTU/hr							
13	Mass Flow	2.49E+00	Lb/hr							
14		5.97E+01	Lb/day							
15	Volumetric Flow	4.41E+00	GPM	(does not include solid phase)						
16		5.89E-01	ft^3/min	(does not include solid phase)						
17	Molar Flow	8.76E-02	Lbmol/hr							
18	Molecular Weight	2.84E+01	Lb/Lbmol							
19	Pressure	1.00E+03	mbar							
20	Temperature	3.00E+01	C							
21	Na Molarity	0.00E+00	mol/L							
22	pH	0.00E+00	pH							
23	Total TRU	0.00E+00	Ci/L							
24	Total Activity	0.00E+00	Ci/L							
25										
26	Component	Aqueous Comp			Solid Comp	Gaseous (1)		Total Comp		
27	Unit	mol/L	Lb/gal	Lb/day	Lb/day	mol/L	Lb/day	Lb/day	mt/day	g/sec
28	Total	1.76E-09	2.64E-10	1.68E-06	0.00E+00	3.97E-02	5.97E+01	5.97E+01	2.71E-02	3.14E-01
29	Ag^+	0.00E+00	0.00E+00	0.00E+00	0.00E+00	0.00E+00	0.00E+00	0.00E+00	0.00E+00	0.00E+00
30	Al^{+3}	0.00E+00	0.00E+00	0.00E+00	0.00E+00	0.00E+00	0.00E+00	0.00E+00	0.00E+00	0.00E+00
31	As^{+3}	0.00E+00	0.00E+00	0.00E+00	0.00E+00	0.00E+00	0.00E+00	0.00E+00	0.00E+00	0.00E+00
32	B^{+3}	0.00E+00	0.00E+00	0.00E+00	0.00E+00	0.00E+00	0.00E+00	0.00E+00	0.00E+00	0.00E+00
33	Ba^{+2}	0.00E+00	0.00E+00	0.00E+00	0.00E+00	0.00E+00	0.00E+00	0.00E+00	0.00E+00	0.00E+00
34	Bi^{+3}	0.00E+00	0.00E+00	0.00E+00	0.00E+00	0.00E+00	0.00E+00	0.00E+00	0.00E+00	0.00E+00
35	Ca^{+2}	0.00E+00	0.00E+00	0.00E+00	0.00E+00	0.00E+00	0.00E+00	0.00E+00	0.00E+00	0.00E+00
36	Cd^{+2}	0.00E+00	0.00E+00	0.00E+00	0.00E+00	0.00E+00	0.00E+00	0.00E+00	0.00E+00	0.00E+00
37	Ce^{+3}	0.00E+00	0.00E+00	0.00E+00	0.00E+00	0.00E+00	0.00E+00	0.00E+00	0.00E+00	0.00E+00
38	Cr^-	0.00E+00	0.00E+00	0.00E+00	0.00E+00	0.00E+00	0.00E+00	0.00E+00	0.00E+00	0.00E+00
39	CO	0.00E+00	0.00E+00	0.00E+00	0.00E+00	0.00E+00	0.00E+00	0.00E+00	0.00E+00	0.00E+00
40	CO_2	0.00E+00	0.00E+00	0.00E+00	0.00E+00	0.00E+00	0.00E+00	0.00E+00	0.00E+00	0.00E+00
41	CO_3^{-2}	0.00E+00	0.00E+00	0.00E+00	0.00E+00	0.00E+00	0.00E+00	0.00E+00	0.00E+00	0.00E+00
42	Cr^{+3}	0.00E+00	0.00E+00	0.00E+00	0.00E+00	0.00E+00	0.00E+00	0.00E+00	0.00E+00	0.00E+00
43	Cu^{+2}	0.00E+00	0.00E+00	0.00E+00	0.00E+00	0.00E+00	0.00E+00	0.00E+00	0.00E+00	0.00E+00
44	F^-	0.00E+00	0.00E+00	0.00E+00	0.00E+00	0.00E+00	0.00E+00	0.00E+00	0.00E+00	0.00E+00
45	Fe^{+3}	0.00E+00	0.00E+00	0.00E+00	0.00E+00	0.00E+00	0.00E+00	0.00E+00	0.00E+00	0.00E+00
46	H_2O	1.76E-09	2.64E-10	1.68E-06	0.00E+00	1.69E-03	1.62E+00	1.62E+00	7.34E-04	8.50E-03
47	$H_2O(b)$	0.00E+00	0.00E+00	0.00E+00	0.00E+00	0.00E+00	0.00E+00	0.00E+00	0.00E+00	0.00E+00
48	H^+	0.00E+00	0.00E+00	0.00E+00	0.00E+00	0.00E+00	0.00E+00	0.00E+00	0.00E+00	0.00E+00
49	HCL	0.00E+00	0.00E+00	0.00E+00	0.00E+00	0.00E+00	0.00E+00	0.00E+00	0.00E+00	0.00E+00
50	HCO3-	0.00E+00	0.00E+00	0.00E+00	0.00E+00	0.00E+00	0.00E+00	0.00E+00	0.00E+00	0.00E+00
51	H2CO3	0.00E+00	0.00E+00	0.00E+00	0.00E+00	0.00E+00	0.00E+00	0.00E+00	0.00E+00	0.00E+00
52	HF	0.00E+00	0.00E+00	0.00E+00	0.00E+00	0.00E+00	0.00E+00	0.00E+00	0.00E+00	0.00E+00
53	Hg^{+2}	0.00E+00	0.00E+00	0.00E+00	0.00E+00	0.00E+00	0.00E+00	0.00E+00	0.00E+00	0.00E+00
54	HNO_3	0.00E+00	0.00E+00	0.00E+00	0.00E+00	0.00E+00	0.00E+00	0.00E+00	0.00E+00	0.00E+00
55	K^+	0.00E+00	0.00E+00	0.00E+00	0.00E+00	0.00E+00	0.00E+00	0.00E+00	0.00E+00	0.00E+00
56	La^{+3}	0.00E+00	0.00E+00	0.00E+00	0.00E+00	0.00E+00	0.00E+00	0.00E+00	0.00E+00	0.00E+00
57	Li^+	0.00E+00	0.00E+00	0.00E+00	0.00E+00	0.00E+00	0.00E+00	0.00E+00	0.00E+00	0.00E+00
58	Mg^{+2}	0.00E+00	0.00E+00	0.00E+00	0.00E+00	0.00E+00	0.00E+00	0.00E+00	0.00E+00	0.00E+00
59	Mn^{+3}	0.00E+00	0.00E+00	0.00E+00	0.00E+00	0.00E+00	0.00E+00	0.00E+00	0.00E+00	0.00E+00
60	MnO_4^-	0.00E+00	0.00E+00	0.00E+00	0.00E+00	0.00E+00	0.00E+00	0.00E+00	0.00E+00	0.00E+00
61	N_2	0.00E+00	0.00E+00	0.00E+00	0.00E+00	3.00E-02	4.45E+01	4.45E+01	2.02E-02	2.34E-01
62	Na^+	0.00E+00	0.00E+00	0.00E+00	0.00E+00	0.00E+00	0.00E+00	0.00E+00	0.00E+00	0.00E+00
63	NH3	0.00E+00	0.00E+00	0.00E+00	0.00E+00	3.33E-27	3.01E-24	3.01E-24	1.37E-27	1.58E-26
64	NH4+	0.00E+00	0.00E+00	0.00E+00	0.00E+00	0.00E+00	0.00E+00	0.00E+00	0.00E+00	0.00E+00
65	Ni^{+2}	0.00E+00	0.00E+00	0.00E+00	0.00E+00	0.00E+00	0.00E+00	0.00E+00	0.00E+00	0.00E+00
66	NO	0.00E+00	0.00E+00	0.00E+00	0.00E+00	0.00E+00	0.00E+00	0.00E+00	0.00E+00	0.00E+00
67	NO_2	0.00E+00	0.00E+00	0.00E+00	0.00E+00	0.00E+00	0.00E+00	0.00E+00	0.00E+00	0.00E+00
68	NO_2^-	0.00E+00	0.00E+00	0.00E+00	0.00E+00	0.00E+00	0.00E+00	0.00E+00	0.00E+00	0.00E+00
69	NO_3^-	0.00E+00	0.00E+00	0.00E+00	0.00E+00	0.00E+00	0.00E+00	0.00E+00	0.00E+00	0.00E+00
70	O_2	0.00E+00	0.00E+00	0.00E+00	0.00E+00	7.98E-03	1.35E+01	1.35E+01	6.15E-03	7.12E-02
71	$O^=$	0.00E+00	0.00E+00	0.00E+00	0.00E+00	0.00E+00	0.00E+00	0.00E+00	0.00E+00	0.00E+00
72	OH^-	0.00E+00	0.00E+00	0.00E+00	0.00E+00	0.00E+00	0.00E+00	0.00E+00	0.00E+00	0.00E+00
73	$OH(b)^-$	0.00E+00	0.00E+00	0.00E+00	0.00E+00	0.00E+00	0.00E+00	0.00E+00	0.00E+00	0.00E+00

CALCULATION SHEET

BY: E. Berrios
DATE: 12/22/05

PROJECT: WTP
JOB NO.: 24590
CALC NO.: 24590-WTP-M4C-FRP-00003
SHEET REV: D
SHEET NO.: C-47

SUBJECT: Integrated Baseline Emissions Report Non-SSFM Represented Constituents Emissions Rate Estimation

	A	B	C	D	E	F	G	H	I	J
74	Pb^{+2}	0.00E+00	0.00E+00	0.00E+00	0.00E+00	0.00E+00	0.00E+00	0.00E+00	0.00E+00	0.00E+00
75	Pd^{+2}	0.00E+00	0.00E+00	0.00E+00	0.00E+00	0.00E+00	0.00E+00	0.00E+00	0.00E+00	0.00E+00
76	PO_4^{-3}	0.00E+00	0.00E+00	0.00E+00	0.00E+00	0.00E+00	0.00E+00	0.00E+00	0.00E+00	0.00E+00
77	Resin	0.00E+00	0.00E+00	0.00E+00	0.00E+00	0.00E+00	0.00E+00	0.00E+00	0.00E+00	0.00E+00
78	Rh^{+3}	0.00E+00	0.00E+00	0.00E+00	0.00E+00	0.00E+00	0.00E+00	0.00E+00	0.00E+00	0.00E+00
79	Ru^{+3}	0.00E+00	0.00E+00	0.00E+00	0.00E+00	0.00E+00	0.00E+00	0.00E+00	0.00E+00	0.00E+00
80	S^{+4}	0.00E+00	0.00E+00	0.00E+00	0.00E+00	0.00E+00	0.00E+00	0.00E+00	0.00E+00	0.00E+00
81	SiO2	0.00E+00	0.00E+00	0.00E+00	0.00E+00	0.00E+00	0.00E+00	0.00E+00	0.00E+00	0.00E+00
82	SiO_4^{-4}	0.00E+00	0.00E+00	0.00E+00	0.00E+00	0.00E+00	0.00E+00	0.00E+00	0.00E+00	0.00E+00
83	SO_2	0.00E+00	0.00E+00	0.00E+00	0.00E+00	0.00E+00	0.00E+00	0.00E+00	0.00E+00	0.00E+00
84	SO_4^{-2}	0.00E+00	0.00E+00	0.00E+00	0.00E+00	0.00E+00	0.00E+00	0.00E+00	0.00E+00	0.00E+00
85	Sr^{+2}	0.00E+00	0.00E+00	0.00E+00	0.00E+00	0.00E+00	0.00E+00	0.00E+00	0.00E+00	0.00E+00
86	Sucrose	0.00E+00	0.00E+00	0.00E+00	0.00E+00	0.00E+00	0.00E+00	0.00E+00	0.00E+00	0.00E+00
87	Tl^{+4}	0.00E+00	0.00E+00	0.00E+00	0.00E+00	0.00E+00	0.00E+00	0.00E+00	0.00E+00	0.00E+00
88	Zn^{+2}	0.00E+00	0.00E+00	0.00E+00	0.00E+00	0.00E+00	0.00E+00	0.00E+00	0.00E+00	0.00E+00
89	Zr^{+4}	0.00E+00	0.00E+00	0.00E+00	0.00E+00	0.00E+00	0.00E+00	0.00E+00	0.00E+00	0.00E+00
90										
91	Components	Aqueous Comp			Solid Comp	Gaseous		Total Comp		
92	Unit	mol/L	Lb/gal	Lb/day	Lb/day	mol/L	Lb/day	Lb/day	Mt/day	g/sec
93	Total	0.00E+00	0.00E+00	0.00E+00	0.00E+00	0.00E+00	0.00E+00	0.00E+00	0.00E+00	0.00E+00
94	$C_2O_4^{-2}$	0.00E+00	0.00E+00	0.00E+00	0.00E+00	0.00E+00	0.00E+00	0.00E+00	0.00E+00	0.00E+00
95	Formate	0.00E+00	0.00E+00	0.00E+00	0.00E+00	0.00E+00	0.00E+00	0.00E+00	0.00E+00	0.00E+00
96	Acetate	0.00E+00	0.00E+00	0.00E+00	0.00E+00	0.00E+00	0.00E+00	0.00E+00	0.00E+00	0.00E+00
97	Glycolate	0.00E+00	0.00E+00	0.00E+00	0.00E+00	0.00E+00	0.00E+00	0.00E+00	0.00E+00	0.00E+00
98	IDA	0.00E+00	0.00E+00	0.00E+00	0.00E+00	0.00E+00	0.00E+00	0.00E+00	0.00E+00	0.00E+00
99	Citrate	0.00E+00	0.00E+00	0.00E+00	0.00E+00	0.00E+00	0.00E+00	0.00E+00	0.00E+00	0.00E+00
100	HEDTA	0.00E+00	0.00E+00	0.00E+00	0.00E+00	0.00E+00	0.00E+00	0.00E+00	0.00E+00	0.00E+00
101	EDTA	0.00E+00	0.00E+00	0.00E+00	0.00E+00	0.00E+00	0.00E+00	0.00E+00	0.00E+00	0.00E+00
102										
103	Rad. Comp	Aqueous Rad. Comp			Solids Rad. Comp (1)			Total Rad. Comp (1)		
104	Unit	Ci/L	Ci/day	Lb/day	Ci/L	Ci/day	Lb/day	Ci/L	Ci/day	Lb/day
105	Total	0.00E+00	0.00E+00	0.00E+00	0.00E+00	0.00E+00	0.00E+00	0.00E+00	0.00E+00	0.00E+00
106	^{241}Am	0.00E+00	0.00E+00	0.00E+00	0.00E+00	0.00E+00	0.00E+00	0.00E+00	0.00E+00	0.00E+00
107	^{243}Am	0.00E+00	0.00E+00	0.00E+00	0.00E+00	0.00E+00	0.00E+00	0.00E+00	0.00E+00	0.00E+00
108	^{14}C	0.00E+00	0.00E+00	0.00E+00	0.00E+00	0.00E+00	0.00E+00	0.00E+00	0.00E+00	0.00E+00
109	^{60}Co	0.00E+00	0.00E+00	0.00E+00	0.00E+00	0.00E+00	0.00E+00	0.00E+00	0.00E+00	0.00E+00
110	^{243}Cm	0.00E+00	0.00E+00	0.00E+00	0.00E+00	0.00E+00	0.00E+00	0.00E+00	0.00E+00	0.00E+00
111	^{244}Cm	0.00E+00	0.00E+00	0.00E+00	0.00E+00	0.00E+00	0.00E+00	0.00E+00	0.00E+00	0.00E+00
112	^{137}Cs	0.00E+00	0.00E+00	0.00E+00	0.00E+00	0.00E+00	0.00E+00	0.00E+00	0.00E+00	0.00E+00
113	^{152}Eu	0.00E+00	0.00E+00	0.00E+00	0.00E+00	0.00E+00	0.00E+00	0.00E+00	0.00E+00	0.00E+00
114	^{154}Eu	0.00E+00	0.00E+00	0.00E+00	0.00E+00	0.00E+00	0.00E+00	0.00E+00	0.00E+00	0.00E+00
115	^{155}Eu	0.00E+00	0.00E+00	0.00E+00	0.00E+00	0.00E+00	0.00E+00	0.00E+00	0.00E+00	0.00E+00
116	^{3}H	0.00E+00	0.00E+00	0.00E+00	0.00E+00	0.00E+00	0.00E+00	0.00E+00	0.00E+00	0.00E+00
117	^{129}I	0.00E+00	0.00E+00	0.00E+00	0.00E+00	0.00E+00	0.00E+00	0.00E+00	0.00E+00	0.00E+00
118	^{63}Ni	0.00E+00	0.00E+00	0.00E+00	0.00E+00	0.00E+00	0.00E+00	0.00E+00	0.00E+00	0.00E+00
119	^{237}Np	0.00E+00	0.00E+00	0.00E+00	0.00E+00	0.00E+00	0.00E+00	0.00E+00	0.00E+00	0.00E+00
120	^{238}Pu	0.00E+00	0.00E+00	0.00E+00	0.00E+00	0.00E+00	0.00E+00	0.00E+00	0.00E+00	0.00E+00
121	^{239}Pu	0.00E+00	0.00E+00	0.00E+00	0.00E+00	0.00E+00	0.00E+00	0.00E+00	0.00E+00	0.00E+00
122	^{240}Pu	0.00E+00	0.00E+00	0.00E+00	0.00E+00	0.00E+00	0.00E+00	0.00E+00	0.00E+00	0.00E+00
123	^{241}Pu	0.00E+00	0.00E+00	0.00E+00	0.00E+00	0.00E+00	0.00E+00	0.00E+00	0.00E+00	0.00E+00
124	^{242}Pu	0.00E+00	0.00E+00	0.00E+00	0.00E+00	0.00E+00	0.00E+00	0.00E+00	0.00E+00	0.00E+00
125	^{125}Sb	0.00E+00	0.00E+00	0.00E+00	0.00E+00	0.00E+00	0.00E+00	0.00E+00	0.00E+00	0.00E+00
126	^{151}Sm	0.00E+00	0.00E+00	0.00E+00	0.00E+00	0.00E+00	0.00E+00	0.00E+00	0.00E+00	0.00E+00
127	^{126}Sn	0.00E+00	0.00E+00	0.00E+00	0.00E+00	0.00E+00	0.00E+00	0.00E+00	0.00E+00	0.00E+00
128	^{90}Sr	0.00E+00	0.00E+00	0.00E+00	0.00E+00	0.00E+00	0.00E+00	0.00E+00	0.00E+00	0.00E+00
129	^{99}Tc	0.00E+00	0.00E+00	0.00E+00	0.00E+00	0.00E+00	0.00E+00	0.00E+00	0.00E+00	0.00E+00
130	^{232}Th	0.00E+00	0.00E+00	0.00E+00	0.00E+00	0.00E+00	0.00E+00	0.00E+00	0.00E+00	0.00E+00
131	^{233}U	0.00E+00	0.00E+00	0.00E+00	0.00E+00	0.00E+00	0.00E+00	0.00E+00	0.00E+00	0.00E+00
132	^{234}U	0.00E+00	0.00E+00	0.00E+00	0.00E+00	0.00E+00	0.00E+00	0.00E+00	0.00E+00	0.00E+00
133	^{235}U	0.00E+00	0.00E+00	0.00E+00	0.00E+00	0.00E+00	0.00E+00	0.00E+00	0.00E+00	0.00E+00
134	^{236}U	0.00E+00	0.00E+00	0.00E+00	0.00E+00	0.00E+00	0.00E+00	0.00E+00	0.00E+00	0.00E+00
135	^{238}U	0.00E+00	0.00E+00	0.00E+00	0.00E+00	0.00E+00	0.00E+00	0.00E+00	0.00E+00	0.00E+00
136	(1) All radionuclides in gaseous streams are assumed to exist as solid particulate.									

	A	B	C	D	E	F	G	H	I	J
1	**Table C-24 RLD34 Stream Report**									
3	Stream Number:		RLD34							
4	Stream Name:		LAW C3/C5 drain/sump collection vessel vent							
5	Configuration:		MRQ-05-0049.acmf							
6	Run Date / Time:		12/14/2005 - 1:42:25 PM							
7	Run Data File:		H:\ACM v3.1\MRQ-05-0049\MRQ_05_0049A_Streams.csv							
8										
9	Stream Parameters									
10	Variable	Value	Units							
11	Density	1.13E-03	g/cm^3	(does not include solid phase)						
12	Enthalpy	-6.81E+03	BTU/hr							
13	Mass Flow	4.42E+01	Lb/hr							
14		1.06E+03	Lb/day							
15	Volumetric Flow	7.83E+01	GPM	(does not include solid phase)						
16		1.05E+01	ft^3/min	(does not include solid phase)						
17	Molar Flow	1.56E+00	Lbmol/hr							
18	Molecular Weight	2.84E+01	Lb/Lbmol							
19	Pressure	1.00E+03	mbar							
20	Temperature	3.00E+01	C							
21	Na Molarity	0.00E+00	mol/L							
22	pH	2.94E+00	pH							
23	Total TRU	1.41E-16	Ci/L							
24	Total Activity	2.45E-13	Ci/L							
25										
26	Component	Aqueous Comp			Solid Comp	Gaseous (1)		Total Comp		
27	Unit	mol/L	Lb/gal	Lb/day	Lb/day	mol/L	Lb/day	Lb/day	mU/day	g/sec
28	Total	1.55E-09	2.38E-10	2.69E-05	5.04E-07	3.97E-02	1.06E+03	1.06E+03	4.82E-01	5.58E+00
29	Ag^+	0.00E+00	0.00E+00	0.00E+00	8.45E-11	0.00E+00	0.00E+00	8.45E-11	3.84E-14	4.45E-13
30	Al^{+3}	0.00E+00	0.00E+00	0.00E+00	8.25E-09	0.00E+00	0.00E+00	8.25E-09	3.75E-12	4.34E-11
31	As^{+3}	0.00E+00	0.00E+00	0.00E+00	5.44E-10	0.00E+00	0.00E+00	5.44E-10	2.47E-13	2.86E-12
32	B^{+3}	0.00E+00	0.00E+00	0.00E+00	6.39E-08	0.00E+00	0.00E+00	6.39E-08	2.90E-11	3.36E-10
33	Ba^{+2}	0.00E+00	0.00E+00	0.00E+00	5.42E-13	0.00E+00	0.00E+00	5.42E-13	2.46E-16	2.85E-15
34	Bi^{+3}	0.00E+00	0.00E+00	0.00E+00	4.46E-11	0.00E+00	0.00E+00	4.46E-11	2.03E-14	2.35E-13
35	Ca^{+2}	0.00E+00	0.00E+00	0.00E+00	1.95E-08	0.00E+00	0.00E+00	1.95E-08	8.89E-12	1.03E-10
36	Cd^{+2}	0.00E+00	0.00E+00	0.00E+00	6.50E-10	0.00E+00	0.00E+00	6.50E-10	2.96E-13	3.42E-12
37	Ce^{+3}	0.00E+00	0.00E+00	0.00E+00	3.45E-12	0.00E+00	0.00E+00	3.45E-12	1.57E-15	1.82E-14
38	Cl^-	1.23E-11	3.63E-12	4.10E-07	0.00E+00	0.00E+00	0.00E+00	4.10E-07	1.86E-10	2.16E-09
39	CO	0.00E+00	0.00E+00	0.00E+00	0.00E+00	0.00E+00	0.00E+00	0.00E+00	0.00E+00	0.00E+00
40	CO_2	1.32E-14	4.85E-15	5.47E-10	0.00E+00	0.00E+00	0.00E+00	5.47E-10	2.49E-13	2.88E-12
41	CO_3^{-2}	2.98E-12	1.49E-12	1.68E-07	0.00E+00	0.00E+00	0.00E+00	1.68E-07	7.64E-11	8.85E-10
42	Cr^{+3}	0.00E+00	0.00E+00	0.00E+00	4.68E-09	0.00E+00	0.00E+00	4.68E-09	2.13E-12	2.46E-11
43	Cu^{+2}	0.00E+00	0.00E+00	0.00E+00	7.50E-12	0.00E+00	0.00E+00	7.50E-12	3.41E-15	3.95E-14
44	F^-	7.55E-13	1.20E-13	1.35E-08	0.00E+00	0.00E+00	0.00E+00	1.35E-08	6.14E-12	7.11E-11
45	Fe^{+3}	0.00E+00	0.00E+00	0.00E+00	5.18E-09	0.00E+00	0.00E+00	5.18E-09	2.35E-12	2.72E-11
46	H_2O	1.50E-09	2.26E-10	2.55E-05	0.00E+00	1.69E-03	2.87E+01	2.87E+01	1.30E-02	1.51E-01
47	$H_2O(b)$	0.00E+00	0.00E+00	0.00E+00	0.00E+00	0.00E+00	0.00E+00	0.00E+00	0.00E+00	0.00E+00
48	H^+	8.70E-25	7.32E-27	8.26E-22	0.00E+00	0.00E+00	0.00E+00	8.26E-22	3.75E-25	4.34E-24
49	HCL	0.00E+00	0.00E+00	0.00E+00	0.00E+00	0.00E+00	0.00E+00	0.00E+00	0.00E+00	0.00E+00
50	HCO3-	0.00E+00	0.00E+00	0.00E+00	3.73E-24	0.00E+00	0.00E+00	3.73E-24	1.69E-27	1.96E-26
51	H2CO3	0.00E+00	0.00E+00	0.00E+00	0.00E+00	0.00E+00	0.00E+00	0.00E+00	0.00E+00	0.00E+00
52	HF	0.00E+00	0.00E+00	0.00E+00	0.00E+00	0.00E+00	0.00E+00	0.00E+00	0.00E+00	0.00E+00
53	Hg^{+2}	0.00E+00	0.00E+00	0.00E+00	0.00E+00	0.00E+00	0.00E+00	0.00E+00	0.00E+00	0.00E+00
54	HNO_3	0.00E+00	0.00E+00	0.00E+00	0.00E+00	0.00E+00	0.00E+00	0.00E+00	0.00E+00	0.00E+00
55	K^+	5.88E-12	1.85E-12	2.08E-07	0.00E+00	0.00E+00	0.00E+00	2.08E-07	9.46E-11	1.10E-09
56	La^{+3}	0.00E+00	0.00E+00	0.00E+00	7.74E-14	0.00E+00	0.00E+00	7.74E-14	3.52E-17	4.07E-16
57	Li^+	0.00E+00	0.00E+00	0.00E+00	4.17E-08	0.00E+00	0.00E+00	4.17E-08	1.89E-11	2.19E-10
58	Mg^{+2}	0.00E+00	0.00E+00	0.00E+00	1.48E-08	0.00E+00	0.00E+00	1.48E-08	6.72E-12	7.77E-11
59	Mn^{+3}	0.00E+00	0.00E+00	0.00E+00	6.61E-11	0.00E+00	0.00E+00	6.61E-11	3.00E-14	3.48E-13
60	MnO_4^-	0.00E+00	0.00E+00	0.00E+00	0.00E+00	0.00E+00	0.00E+00	0.00E+00	0.00E+00	0.00E+00
61	N_2	0.00E+00	0.00E+00	0.00E+00	0.00E+00	3.00E-02	7.91E+02	7.91E+02	3.60E-01	4.16E+00
62	Na^+	2.21E-11	4.24E-12	4.78E-07	0.00E+00	0.00E+00	0.00E+00	4.78E-07	2.17E-10	2.51E-09
63	NH3	0.00E+00	0.00E+00	0.00E+00	0.00E+00	0.00E+00	0.00E+00	0.00E+00	0.00E+00	0.00E+00
64	NH4+	0.00E+00	0.00E+00	0.00E+00	0.00E+00	0.00E+00	0.00E+00	0.00E+00	0.00E+00	0.00E+00
65	Ni^{+2}	0.00E+00	0.00E+00	0.00E+00	4.76E-10	0.00E+00	0.00E+00	4.76E-10	2.16E-13	2.50E-12
66	NO	0.00E+00	0.00E+00	0.00E+00	0.00E+00	0.00E+00	0.00E+00	0.00E+00	0.00E+00	0.00E+00
67	NO_2	0.00E+00	0.00E+00	0.00E+00	0.00E+00	0.00E+00	0.00E+00	0.00E+00	0.00E+00	0.00E+00
68	NO_2^-	0.00E+00	0.00E+00	0.00E+00	0.00E+00	0.00E+00	0.00E+00	0.00E+00	0.00E+00	0.00E+00
69	NO_3^-	0.00E+00	0.00E+00	0.00E+00	0.00E+00	0.00E+00	0.00E+00	0.00E+00	0.00E+00	0.00E+00
70	O_2	0.00E+00	0.00E+00	0.00E+00	0.00E+00	7.98E-03	2.40E+02	2.40E+02	1.09E-01	1.26E+00
71	O^-	0.00E+00	0.00E+00	0.00E+00	2.43E-07	0.00E+00	0.00E+00	2.43E-07	1.10E-10	1.28E-09
72	OH^-	8.75E-12	1.24E-12	1.40E-07	0.00E+00	0.00E+00	0.00E+00	1.40E-07	6.37E-11	7.37E-10
73	$OH(b)^-$	0.00E+00	0.00E+00	0.00E+00	0.00E+00	0.00E+00	0.00E+00	0.00E+00	0.00E+00	0.00E+00

	A	B	C	D	E	F	G	H	I	J
74	Pb^{+2}	0.00E+00	0.00E+00	0.00E+00	2.82E-10	0.00E+00	0.00E+00	2.82E-10	1.28E-13	1.48E-12
75	Pd^{+2}	0.00E+00	0.00E+00	0.00E+00	1.17E-13	0.00E+00	0.00E+00	1.17E-13	5.31E-17	6.14E-16
76	PO_4^{-3}	0.00E+00	0.00E+00	0.00E+00	3.14E-08	0.00E+00	0.00E+00	3.14E-08	1.43E-11	1.65E-10
77	Resin	0.00E+00	0.00E+00	0.00E+00	0.00E+00	0.00E+00	0.00E+00	0.00E+00	0.00E+00	0.00E+00
78	Rh^{+3}	0.00E+00	0.00E+00	0.00E+00	1.16E-11	0.00E+00	0.00E+00	1.16E-11	5.27E-15	6.10E-14
79	Ru^{+3}	0.00E+00	0.00E+00	0.00E+00	2.04E-10	0.00E+00	0.00E+00	2.04E-10	9.29E-14	1.08E-12
80	S^{-2}	0.00E+00	0.00E+00	0.00E+00	0.00E+00	0.00E+00	0.00E+00	0.00E+00	0.00E+00	0.00E+00
81	SiO2	0.00E+00	0.00E+00	0.00E+00	5.16E-08	0.00E+00	0.00E+00	5.16E-08	2.34E-11	2.71E-10
82	SiO_4^{-4}	0.00E+00	0.00E+00	0.00E+00	2.77E-23	0.00E+00	0.00E+00	2.77E-23	1.26E-26	1.46E-25
83	SO_2	0.00E+00	0.00E+00	0.00E+00	0.00E+00	0.00E+00	0.00E+00	0.00E+00	0.00E+00	0.00E+00
84	SO_4^{-2}	0.00E+00	0.00E+00	0.00E+00	0.00E+00	0.00E+00	0.00E+00	0.00E+00	0.00E+00	0.00E+00
85	Sr^{+2}	0.00E+00	0.00E+00	0.00E+00	2.10E-13	0.00E+00	0.00E+00	2.10E-13	9.56E-17	1.11E-15
86	Sucrose	0.00E+00	0.00E+00	0.00E+00	0.00E+00	0.00E+00	0.00E+00	0.00E+00	0.00E+00	0.00E+00
87	Ti^{+4}	0.00E+00	0.00E+00	0.00E+00	2.63E-11	0.00E+00	0.00E+00	2.63E-11	1.20E-14	1.38E-13
88	Zn^{+2}	0.00E+00	0.00E+00	0.00E+00	1.39E-08	0.00E+00	0.00E+00	1.39E-08	6.31E-12	7.31E-11
89	Zr^{+4}	0.00E+00	0.00E+00	0.00E+00	4.49E-09	0.00E+00	0.00E+00	4.49E-09	2.04E-12	2.36E-11
90										
91	Components	Aqueous Comp			Solid Comp	Gaseous		Total Comp		
92	Unit	mol/L	Lb/gal	Lb/day	Lb/day	mol/L	Lb/day	Lb/day	Mt/day	g/sec
93	Total	0.00E+00	0.00E+00	0.00E+00	4.61E-07	0.00E+00	0.00E+00	4.61E-07	2.10E-10	2.43E-09
94	$C_2O_4^{-2}$	0.00E+00	0.00E+00	0.00E+00	4.61E-07	0.00E+00	0.00E+00	4.61E-07	2.10E-10	2.43E-09
95	Formate	0.00E+00	0.00E+00	0.00E+00	0.00E+00	0.00E+00	0.00E+00	0.00E+00	0.00E+00	0.00E+00
96	Acetate	0.00E+00	0.00E+00	0.00E+00	0.00E+00	0.00E+00	0.00E+00	0.00E+00	0.00E+00	0.00E+00
97	Glycolate	0.00E+00	0.00E+00	0.00E+00	0.00E+00	0.00E+00	0.00E+00	0.00E+00	0.00E+00	0.00E+00
98	IDA	0.00E+00	0.00E+00	0.00E+00	0.00E+00	0.00E+00	0.00E+00	0.00E+00	0.00E+00	0.00E+00
99	Citrate	0.00E+00	0.00E+00	0.00E+00	0.00E+00	0.00E+00	0.00E+00	0.00E+00	0.00E+00	0.00E+00
100	HEDTA	0.00E+00	0.00E+00	0.00E+00	0.00E+00	0.00E+00	0.00E+00	0.00E+00	0.00E+00	0.00E+00
101	EDTA	0.00E+00	0.00E+00	0.00E+00	0.00E+00	0.00E+00	0.00E+00	0.00E+00	0.00E+00	0.00E+00
102										
103	Rad. Comp	Aqueous Rad. Comp			Solids Rad. Comp (1)			Total Rad. Comp (1)		
104	Unit	Ci/L	Ci/day	Lb/day	Ci/L	Ci/day	Lb/day	Ci/L	Ci/day	Lb/day
105	Total	0.00E+00	0.00E+00	0.00E+00	2.45E-13	1.05E-07	8.58E-09	2.45E-13	1.05E-07	8.58E-09
106	^{241}Am	0.00E+00	0.00E+00	0.00E+00	1.21E-16	5.16E-11	3.32E-14	1.21E-16	5.16E-11	3.32E-14
107	^{243}Am	0.00E+00	0.00E+00	0.00E+00	7.85E-20	3.35E-14	3.70E-16	7.85E-20	3.35E-14	3.70E-16
108	^{14}C	0.00E+00	0.00E+00	0.00E+00	0.00E+00	0.00E+00	0.00E+00	0.00E+00	0.00E+00	0.00E+00
109	^{60}Co	0.00E+00	0.00E+00	0.00E+00	8.38E-17	3.58E-11	6.97E-17	8.38E-17	3.58E-11	6.97E-17
110	^{243}Cm	0.00E+00	0.00E+00	0.00E+00	5.51E-21	2.35E-15	1.03E-19	5.51E-21	2.35E-15	1.03E-19
111	^{244}Cm	0.00E+00	0.00E+00	0.00E+00	1.30E-19	5.55E-14	1.51E-18	1.30E-19	5.55E-14	1.51E-18
112	^{137}Cs	0.00E+00	0.00E+00	0.00E+00	5.63E-14	2.40E-08	6.10E-13	5.63E-14	2.40E-08	6.10E-13
113	^{152}Eu	0.00E+00	0.00E+00	0.00E+00	3.60E-19	1.54E-13	1.95E-18	3.60E-19	1.54E-13	1.95E-18
114	^{154}Eu	0.00E+00	0.00E+00	0.00E+00	7.45E-17	3.18E-11	2.59E-16	7.45E-17	3.18E-11	2.59E-16
115	^{155}Eu	0.00E+00	0.00E+00	0.00E+00	2.15E-17	9.19E-12	4.17E-17	2.15E-17	9.19E-12	4.17E-17
116	^{3}H	0.00E+00	0.00E+00	0.00E+00	0.00E+00	0.00E+00	0.00E+00	0.00E+00	0.00E+00	0.00E+00
117	^{129}I	0.00E+00	0.00E+00	0.00E+00	0.00E+00	0.00E+00	0.00E+00	0.00E+00	0.00E+00	0.00E+00
118	^{63}Ni	0.00E+00	0.00E+00	0.00E+00	2.72E-15	1.16E-09	4.51E-14	2.72E-15	1.16E-09	4.51E-14
119	^{237}Np	0.00E+00	0.00E+00	0.00E+00	3.79E-20	1.62E-14	5.06E-14	3.79E-20	1.62E-14	5.06E-14
120	^{238}Pu	0.00E+00	0.00E+00	0.00E+00	2.14E-19	9.15E-14	1.18E-17	2.14E-19	9.15E-14	1.18E-17
121	^{239}Pu	0.00E+00	0.00E+00	0.00E+00	2.96E-18	1.26E-12	4.49E-14	2.96E-18	1.26E-12	4.49E-14
122	^{240}Pu	0.00E+00	0.00E+00	0.00E+00	7.67E-19	3.28E-13	3.18E-15	7.67E-19	3.28E-13	3.18E-15
123	^{241}Pu	0.00E+00	0.00E+00	0.00E+00	1.61E-17	6.88E-12	1.47E-16	1.61E-17	6.88E-12	1.47E-16
124	^{242}Pu	0.00E+00	0.00E+00	0.00E+00	8.12E-23	3.47E-17	1.94E-17	8.12E-23	3.47E-17	1.94E-17
125	^{125}Sb	0.00E+00	0.00E+00	0.00E+00	1.22E-15	5.21E-10	1.11E-15	1.22E-15	5.21E-10	1.11E-15
126	^{151}Sm	0.00E+00	0.00E+00	0.00E+00	5.36E-17	2.29E-11	1.92E-15	5.36E-17	2.29E-11	1.92E-15
127	^{126}Sn	0.00E+00	0.00E+00	0.00E+00	7.06E-19	3.01E-13	5.85E-14	7.06E-19	3.01E-13	5.85E-14
128	^{90}Sr	0.00E+00	0.00E+00	0.00E+00	3.10E-14	1.32E-08	2.11E-13	3.10E-14	1.32E-08	2.11E-13
129	^{99}Tc	0.00E+00	0.00E+00	0.00E+00	1.53E-13	6.54E-08	8.51E-09	1.53E-13	6.54E-08	8.51E-09
130	^{232}Th	0.00E+00	0.00E+00	0.00E+00	6.70E-22	2.86E-16	5.73E-12	6.70E-22	2.86E-16	5.73E-12
131	^{233}U	0.00E+00	0.00E+00	0.00E+00	3.88E-20	1.65E-14	3.79E-15	3.88E-20	1.65E-14	3.79E-15
132	^{234}U	0.00E+00	0.00E+00	0.00E+00	2.71E-20	1.16E-14	4.11E-15	2.71E-20	1.16E-14	4.11E-15
133	^{235}U	0.00E+00	0.00E+00	0.00E+00	1.07E-21	4.56E-16	4.65E-13	1.07E-21	4.56E-16	4.65E-13
134	^{236}U	0.00E+00	0.00E+00	0.00E+00	1.83E-21	7.81E-16	2.66E-14	1.83E-21	7.81E-16	2.66E-14
135	^{238}U	0.00E+00	0.00E+00	0.00E+00	2.12E-20	9.04E-15	5.93E-11	2.12E-20	9.04E-15	5.93E-11
136	(1) All radionuclides in gaseous streams are assumed to exist as solid particulate.									

Attachment D - Calculations

BY: E. Barnes
DATE: 12/22/05

CALCULATION SHEET

PROJECT: WTP
JOB NO : 24590
CALC NO.: 24590-WTP-M4C-FRP-00003
SHEET REV:0
SHEET NO.:D-2

SUBJECT: Integrated Baseline Emissions Report Non-SSFM Represented Constituents Emissions Rate Estimation

	A	B	C	D	E	F	G	H	I	J	K	L	M	N	O	P	Q	R	S	T
1	**Table D-1 Feed Rate Calculation**							LAW & HLW Solids						Total						
2	LAW & HLW Supernate			Represent		FRP01			Solids	Solids	Solids	Liquid	Liquid	FRP14	Feed rates					
3	Non-Rep Const	MW	mol/mol Na	Compound	mol/l	mol/hr			mol/mol Na	mol/l	mol/hr	mol/l	mol/hr	mol/hr						
4	Be	9.0	1.56E-05	Zr	6.24E-05	5.84E-02		Be	2.60E-04	1.04E-03	3.88E-02	6.24E-05	1.02E-01	1.41E-01	LAW Na mol	4.00	mol/l			
5	CN	26.0	1.66E-05	PO4	6.64E-05	6.21E-02		CN	7.10E-05	2.84E-04	1.06E-02	6.64E-05	1.09E-01	1.19E-01	LAW Flow	33.0	ft^3/hr	935	L/hr	FRP01
6	Co	58.9	1.28E-05	60Co	5.12E-05	4.79E-02		Co	8.18E-05	3.27E-04	1.22E-02	5.12E-05	8.38E-02	9.60E-02	HLW Liquid Flow	57.8	ft^3/hr	1637	L/hr	FRP14
7	Mo	95.9	6.45E-05	Bi	2.58E-04	2.41E-01		Mo	6.86E-05	2.74E-04	1.02E-02	2.58E-04	4.22E-01	4.33E-01	HLW Na mol	4.00	mol/l			
8	Sb	121.7	1.27E-05	Sb-125	5.08E-05	4.75E-02		Sb	2.06E-05	8.24E-05	3.08E-03	5.08E-05	8.32E-02	8.62E-02	HLW % solids	4.6	%			
9	Se	78.9	3.36E-05	F	1.34E-04	1.26E-01		Se	5.48E-05	2.19E-04	8.19E-03	1.34E-04	2.20E-01	2.28E-01	HLW density	1.25	g/cm^3			
10	Sn	118.7	3.20E-07	Sn-126	1.28E-06	1.20E-03		Sn	5.28E-05	2.11E-04	7.88E-03	1.28E-06	2.10E-03	9.98E-03	Stream density adj	1.31	g/cm^3			
11	Ta	180.9	1.13E-06	Zr	4.52E-06	4.23E-03		Ta	8.92E-04	3.57E-03	1.33E-01	4.52E-06	7.40E-03	1.41E-01	HLW solids density	2.6	g/cm^3			
12	Ti	204.3	9.13E-06	F	3.65E-05	3.42E-02		Ti	2.41E-05	9.64E-05	3.60E-03	3.65E-05	5.98E-02	6.34E-02	HLW solids rate	5048	lb/d			
13	U	238.0	5.23E-05	234U	2.09E-04	1.96E-01		U	1.09E-02	4.38E-02	1.63E+00	2.09E-04	3.42E-01	1.97E+00	HLW solids vol	1.3	ft^3/hr	37	L/hr	
14	V	50.9	2.02E-05	Bi	8.08E-05	7.56E-02		V	8.18E-05	3.26E-04	1.22E-02	8.08E-05	1.32E-01	1.44E-01						
15	W	183.8	9.80E-06	Zr	3.92E-05	3.67E-02		W	1.72E-04	6.88E-04	2.57E-02	3.92E-05	6.42E-02	8.99E-02						
16	Y	88.9	2.19E-06	Sr-90	8.76E-06	8.19E-03		Y	1.98E-04	7.92E-04	2.96E-02	8.76E-06	1.43E-02	4.39E-02						
17			Bq/mol Na		Bq/l	Bq/hr			Bq/mol Na	Bq/l	Bq/hr	Bq/l	Bq/hr	Bq/hr						
18	106Ru	105	1.17E+05	F	4.68E+05	4.38E+08		106Ru	7.02E+05	2.81E+06	1.05E+08	4.68E+05	7.66E+08	8.71E+08						
19	113mCd	113	1.81E+05	Cd	7.24E+05	6.77E+08		113mCd	5.31E+06	2.12E+07	7.93E+08	7.24E+05	1.19E+09	1.98E+09						
20	134Cs	134	1.96E+06	137Cs	7.84E+06	7.33E+09		134Cs	1.69E+06	6.76E+06	2.52E+08	7.84E+06	1.28E+10	1.31E+10						
21	137mBa	137	6.52E+09	137Cs	2.61E+10	2.44E+13		137mBa	4.80E+09	1.92E+10	7.17E+11	2.61E+10	4.27E+13	4.34E+13						
22	226Ra	226	3.48E-01	Zr	1.39E+00	1.30E+03		226Ra	7.07E+00	2.83E+01	1.06E+03	1.39E+00	2.28E+03	3.33E+03						
23	227Ac	227	2.71E+01	Zr	1.08E+02	1.01E+05		227Ac	2.77E+04	1.11E+05	4.14E+06	1.08E+02	1.77E+05	4.32E+06						
24	228Ra	228	4.13E+02	Zr	1.65E+03	1.55E+06		228Ra	2.03E+04	8.12E+04	3.03E+06	1.65E+03	2.70E+06	5.74E+06						
25	229Th	229	1.36E+01	232Th	5.44E+01	5.09E+04		229Th	7.58E+03	3.03E+04	1.13E+06	5.44E+01	8.90E+04	1.22E+06						
26	231Pa	231	2.85E+02	Zr	1.14E+03	1.07E+06		231Pa	2.33E+03	9.32E+03	3.48E+05	1.14E+03	1.87E+06	2.21E+06						
27	232U	232	3.60E+01	233U	1.44E+02	1.35E+05		232U	3.10E+04	1.24E+05	4.63E+06	1.44E+02	2.36E+05	4.87E+06						
28	59Ni	59	9.55E+04	63Ni	3.82E+05	3.57E+08		59Ni	4.13E+05	1.65E+06	6.17E+07	3.82E+05	6.25E+08	6.87E+08						
29	79Se	79	4.60E+03	F	1.84E+04	1.72E+07		79Se	7.18E+04	2.87E+05	1.07E+07	1.84E+04	3.01E+07	4.08E+07						
30	90Y	90	3.74E+08	90Sr	1.50E+09	1.40E+12		90Y	7.57E+10	3.03E+11	1.13E+13	1.50E+09	2.45E+12	1.38E+13						
31	93Zr	93	2.66E+05	Zr	1.06E+06	9.95E+08		93Zr	2.86E+06	1.14E+07	4.27E+08	1.06E+06	1.74E+09	2.17E+09						
32	93mNb	93	1.64E+05	Zr	6.56E+05	6.14E+08		93mNb	1.55E+06	6.20E+06	2.32E+08	6.56E+05	1.07E+09	1.31E+09						
33	242Cm	242	1.05E+04	243Cm	4.20E+04	3.93E+07		242Cm	3.40E+05	1.36E+06	5.08E+07	4.20E+04	6.87E+07	1.20E+08						
34																				
35	Tin Calc																			
36	126Sn	4.08E+04	Bq/mol Na LAW Feed		1.10E-06	Ci/mol Na														
37		6.72E+06	Bq/mol Na HLW Feed		1.82E-04	Ci/mol Na														
38		2.90E+01	Ci Sn/kg Sn																	
39		3.80E-08	kg/mol Na LAW																	
40		6.26E-06	kg/mol Na HLW																	
41		118.71	g/mol																	
42		3.20E-07	mol/mol Na LAW																	
43		5.28E-05	mol/mol Na HLW																	

CALCULATION SHEET

BY: E. Berrios
DATE: 12/22/05

PROJECT: WTP
JOB NO.: 24590
CALC NO.: 24590-WTP-M4C-FRP-00003
SHEET REV: D
SHEET NO.: D-3

SUBJECT: Integrated Baseline Emissions Report Non-SSFM Represented Constituents Emissions Rate Estimation

	A	B	C	D	E	F	G	H	I	J	K	L	M
1	**Table D-2 PJV04 Calculation**									Unabated PT- RFD/PJM			
2			Total feed			Representatives			PJV04	Performance	Non-Rep Const	Non-Rep Const	
3	Non-Rep Const	MW	mol/hr	lb/d			Feed Rate	Units	Rate	Factor	g/sec	Corrected	Units
4	Be	9.0	1.99E-01	9.47E-02		Zr+4	1.25E+02	lb/d	4.49E-04	2.78E+05	1.79E-09	1.79E-09	g/sec
5	CN	26.0	1.81E-01	2.49E-01		PO4-3	3.24E+02	lb/d	7.57E-04	4.28E+05	3.06E-09	3.06E-09	g/sec
6	Co	58.9	1.44E-01	4.48E-01		60Co	9.63E+01	Ci/d	3.44E-04	2.80E+05	8.40E-09	8.40E-09	g/sec
7	Mo	95.9	6.74E-01	3.41E+00		Bi+3	1.76E+01	lb/d	6.20E-05	2.84E+05	6.32E-08	6.32E-08	g/sec
8	Sb	121.7	1.34E-01	8.59E-01		125Sb	3.18E+02	Ci/d	1.11E-03	2.86E+05	1.58E-08	1.58E-08	g/sec
9	Se	78.9	3.54E-01	1.47E+00		F-	1.35E+02	lb/d	3.75E-04	3.60E+05	2.15E-08	2.15E-08	g/sec
10	Sn	118.7	1.12E-02	7.01E-02		126Sn	1.69E+00	Ci/d	5.51E-06	3.06E+05	1.20E-09	1.20E-09	g/sec
11	Ta	180.9	1.45E-01	1.38E+00		Zr+4	1.25E+02	lb/d	4.49E-04	2.78E+05	2.62E-08	2.62E-08	g/sec
12	Tl	204.3	9.75E-02	1.05E+00		F-	1.35E+02	lb/d	3.75E-04	3.60E+05	1.54E-08	1.54E-08	g/sec
13	U	238.0	2.17E+00	2.72E+01		234U	1.08E-01	Ci/d	3.71E-07	2.93E+05	4.90E-07	4.90E-07	g/sec
14	V	50.9	2.20E-01	5.91E-01		Bi+3	1.76E+01	lb/d	6.20E-05	2.84E+05	1.09E-08	1.09E-08	g/sec
15	W	183.8	1.27E-01	1.23E+00		Zr+4	1.25E+02	lb/d	4.49E-04	2.78E+05	2.32E-08	2.32E-08	g/sec
16	Y	88.9	5.21E-02	2.45E-01		90Sr	9.92E+04	Ci/d	3.45E-01	2.87E+05	4.48E-09	4.48E-09	g/sec
17			Bq/hr	Ci/d							Ci/d		
18	106Ru	106	1.31E+09	8.49E-01		F-	1.35E+02	lb/d	3.75E-04	3.60E+05	2.36E-06	8.61E-04	Ci/yr
19	113mCd	113	2.66E+09	1.72E+00		Cd+2	1.26E+01	lb/d	4.82E-05	2.61E+05	6.60E-06	2.41E-03	Ci/yr
20	134Cs	134	2.04E+10	1.32E+01		137Cs	1.48E+05	Ci/d	3.29E-01	4.50E+05	2.94E-05	1.07E-02	Ci/yr
21	137mBa	137	6.78E+13	4.40E+04		137Cs	1.48E+05	Ci/d	3.29E-01	4.50E+05	9.77E-02	3.57E+01	Ci/yr
22	226Ra	226	4.64E+03	3.01E-06		Zr+4	1.25E+02	lb/d	4.49E-04	2.78E+05	1.08E-11	3.95E-09	Ci/yr
23	227Ac	227	4.42E+06	2.87E-03		Zr+4	1.25E+02	lb/d	4.49E-04	2.78E+05	1.03E-08	3.76E-06	Ci/yr
24	228Ra	228	7.28E+06	4.72E-03		Zr+4	1.25E+02	lb/d	4.49E-04	2.78E+05	1.70E-08	6.20E-06	Ci/yr
25	229Th	229	1.27E+06	8.25E-04		232Th	2.34E-02	Ci/d	8.40E-08	2.79E+05	2.96E-09	1.08E-06	Ci/yr
26	231Pa	231	3.28E+06	2.13E-03		Zr+4	1.25E+02	lb/d	4.49E-04	2.78E+05	7.65E-09	2.79E-06	Ci/yr
27	232U	232	5.00E+06	3.24E-03		233U	1.90E+00	Ci/d	6.84E-06	2.77E+05	1.17E-08	4.27E-06	Ci/yr
28	59Ni	59	1.04E+09	6.77E-01		63Ni	6.07E+01	Ci/d	1.27E-04	4.78E+05	1.42E-06	5.18E-04	Ci/yr
29	79Se	79	5.81E+07	3.77E-02		F-	1.35E+02	lb/d	3.75E-04	3.60E+05	1.05E-07	3.82E-05	Ci/yr
30	90Y	90	1.52E+13	9.83E+03		90Sr	9.92E+04	Ci/d	3.45E-01	2.87E+05	3.42E-02	1.25E+01	Ci/yr
31	93Zr	93	3.16E+09	2.05E+00		Zr+4	1.25E+02	lb/d	4.49E-04	2.78E+05	7.38E-06	2.69E-03	Ci/yr
32	93mNb	93	1.92E+09	1.24E+00		Zr+4	1.25E+02	lb/d	4.49E-04	2.78E+05	4.48E-06	1.63E-03	Ci/yr
33	242Cm	242	1.59E+08	1.03E-01		243Cm	1.19E+00	Ci/d	4.30E-06	2.76E+05	3.73E-07	1.36E-04	Ci/yr

CALCULATION SHEET

BY: E. Berrios
DATE: 12/22/05

PROJECT: WTP
JOB NO.: 24590
CALC NO.: 24590-WTP-M4C-FRP-00003
SHEET REV: D
SHEET NO.: D-4

SUBJECT: Integrated Baseline Emissions Report Non-SSFM Represented Constituents Emissions Rate Estimation

	A	B	C	D	E	F	G	H	I	J	K	L	M
1	**Table D-3 PVP01 Calculation**									Unabated PT- VV			
2			Total feed			Representatives			PVP01	Performance	Non-Rep Const	Non-Rep Const	
3	Non-Rep Const	MW	mol/hr	lb/d			Feed Rate	Units	Rate	Factor	g/sec	Corrected	Units
4	Be	9.0	1.99E-01	9.47E-02		Zr+4	1.25E+02	lb/d	6.18E-04	2.02E+05	2.47E-09	2.47E-09	g/sec
5	CN	26.0	1.81E-01	2.49E-01		PO4-3	3.24E+02	lb/d	2.13E-03	1.52E+05	8.60E-09	8.60E-09	g/sec
6	Co	58.9	1.44E-01	4.48E-01		60Co	9.63E+01	Ci/d	4.13E-04	2.33E+05	1.01E-08	1.01E-08	g/sec
7	Mo	95.9	6.74E-01	3.41E+00		Bi+3	1.76E+01	lb/d	4.68E-05	3.76E+05	4.77E-08	4.77E-08	g/sec
8	Sb	121.7	1.34E-01	8.59E-01		125Sb	3.18E+02	Ci/d	8.40E-04	3.79E+05	1.19E-08	1.19E-08	g/sec
9	Se	78.9	3.54E-01	1.47E+00		F-	1.35E+02	lb/d	5.62E-04	2.40E+05	3.23E-08	3.23E-08	g/sec
10	Sn	118.7	1.12E-02	7.01E-02		126Sn	1.69E+00	Ci/d	4.82E-06	3.50E+05	1.05E-09	1.05E-09	g/sec
11	Ta	180.9	1.45E-01	1.38E+00		Zr+4	1.25E+02	lb/d	6.18E-04	2.02E+05	3.60E-08	3.60E-08	g/sec
12	Tl	204.3	9.75E-02	1.05E+00		F-	1.35E+02	lb/d	5.62E-04	2.40E+05	2.31E-08	2.31E-08	g/sec
13	U	238.0	2.17E+00	2.72E+01		234U	1.08E-01	Ci/d	4.93E-07	2.20E+05	6.51E-07	6.51E-07	g/sec
14	V	50.9	2.20E-01	5.91E-01		Bi+3	1.76E+01	lb/d	4.68E-05	3.76E+05	8.27E-09	8.27E-09	g/sec
15	W	183.8	1.27E-01	1.23E+00		Zr+4	1.25E+02	lb/d	6.18E-04	2.02E+05	3.20E-08	3.20E-08	g/sec
16	Y	88.9	5.21E-02	2.45E-01		90Sr	9.92E+04	Ci/d	2.62E-01	3.79E+05	3.40E-09	3.40E-09	g/sec
17			Bq/hr	Ci/d							Ci/d		
18	106Ru	106	1.31E+09	8.49E-01		F-	1.35E+02	lb/d	5.62E-04	2.40E+05	3.54E-06	1.29E-03	Ci/yr
19	113mCd	113	2.66E+09	1.72E+00		Cd+2	1.26E+01	lb/d	3.73E-05	3.37E+05	5.11E-06	1.86E-03	Ci/yr
20	134Cs	134	2.04E+10	1.32E+01		137Cs	1.48E+05	Ci/d	4.00E-01	3.69E+05	3.58E-05	1.31E-02	Ci/yr
21	137mBa	137	6.78E+13	4.40E+04		137Cs	1.48E+05	Ci/d	4.00E-01	3.69E+05	1.19E-01	4.34E+01	Ci/yr
22	226Ra	226	4.64E+03	3.01E-06		Zr+4	1.25E+02	lb/d	6.18E-04	2.02E+05	1.49E-11	5.43E-09	Ci/yr
23	227Ac	227	4.42E+06	2.87E-03		Zr+4	1.25E+02	lb/d	6.18E-04	2.02E+05	1.42E-08	5.17E-06	Ci/yr
24	228Ra	228	7.28E+06	4.72E-03		Zr+4	1.25E+02	lb/d	6.18E-04	2.02E+05	2.34E-08	8.53E-06	Ci/yr
25	229Th	229	1.27E+06	8.25E-04		232Th	2.34E-02	Ci/d	9.99E-08	2.35E+05	3.52E-09	1.28E-06	Ci/yr
26	231Pa	231	3.28E+06	2.13E-03		Zr+4	1.25E+02	lb/d	6.18E-04	2.02E+05	1.05E-08	3.84E-06	Ci/yr
27	232U	232	5.00E+06	3.24E-03		233U	1.90E+00	Ci/d	8.02E-06	2.37E+05	1.37E-08	5.00E-06	Ci/yr
28	59Ni	59	1.04E+09	6.77E-01		63Ni	6.07E+01	Ci/d	2.51E-04	2.42E+05	2.80E-06	1.02E-03	Ci/yr
29	79Se	79	5.81E+07	3.77E-02		F-	1.35E+02	lb/d	5.62E-04	2.40E+05	1.57E-07	5.72E-05	Ci/yr
30	90Y	90	1.52E+13	9.83E+03		90Sr	9.92E+04	Ci/d	2.62E-01	3.79E+05	2.60E-02	9.48E+00	Ci/yr
31	93Zr	93	3.16E+09	2.05E+00		Zr+4	1.25E+02	lb/d	6.18E-04	2.02E+05	1.02E-05	3.71E-03	Ci/yr
32	93mNb	93	1.92E+09	1.24E+00		Zr+4	1.25E+02	lb/d	6.18E-04	2.02E+05	6.16E-06	2.25E-03	Ci/yr
33	242Cm	242	1.59E+08	1.03E-01		243Cm	1.19E+00	Ci/d	5.00E-06	2.38E+05	4.33E-07	1.58E-04	Ci/yr

SUBJECT: Integrated Baseline Emissions Report Non-SSFM Represented Constituents Emissions Rate Estimation

	A	B	C	D	E	F	G	H	I	J	K	L	M	N	O	P
1	**Table D-4 LFP04 Calculation**									Unabated LAW Melter Feed						
2			Total feed			Representatives*			LFP04	Performance	Non-Rep Const	Non-Rep Const				
3	Non-Rep Const	MW	mol/hr	lb/d			Feed Rate	Units	Rate	Factor	g/sec	Corrected	Units			
4	Be	9.0	1.99E-01	9.47E-02		Zr+4	1.25E+02	lb/d	9.09E+00	1.37E+01	3.63E-05	3.63E-05	g/sec			
5	CN	26.0	1.81E-01	2.49E-01		PO4-3	3.24E+02	lb/d	2.25E+02	1.44E+00	9.09E-04	9.09E-04	g/sec			
6	Co	58.9	1.44E-01	4.48E-01		60Co	9.63E+01	Ci/d	2.41E+00	4.00E+01	5.89E-05	5.89E-05	g/sec			
7	Mo	95.9	6.74E-01	3.41E+00		Bi+3	1.76E+01	lb/d	9.60E-01	1.84E+01	9.77E-04	9.77E-04	g/sec			
8	Sb	121.7	1.34E-01	8.59E-01		125Sb	3.18E+02	Ci/d	1.68E+01	1.89E+01	2.39E-04	2.39E-04	g/sec			
9	Se	78.9	3.54E-01	1.47E+00		F-	1.35E+02	lb/d	8.80E+01	1.53E+00	5.05E-03	5.05E-03	g/sec			
10	Sn	118.7	1.12E-02	7.01E-02		126Sn	1.69E+00	Ci/d	2.65E-01	6.36E+00	5.80E-05	5.80E-05	g/sec			
11	Ta	180.9	1.45E-01	1.38E+00		Zr+4	1.25E+02	lb/d	9.09E+00	1.37E+01	5.30E-04	5.30E-04	g/sec			
12	Tl	204.3	9.75E-02	1.05E+00		F-	1.35E+02	lb/d	8.80E+01	1.53E+00	3.61E-03	3.61E-03	g/sec			
13	U	238.0	2.17E+00	2.72E+01		234U	1.08E-01	Ci/d	1.02E-02	1.06E+01	1.35E-02	1.35E-02	g/sec			
14	V	50.9	2.20E-01	5.91E-01		Bi+3	1.76E+01	lb/d	9.60E-01	1.84E+01	1.69E-04	1.69E-04	g/sec			
15	W	183.8	1.27E-01	1.23E+00		Zr+4	1.25E+02	lb/d	9.09E+00	1.37E+01	4.70E-04	4.70E-04	g/sec			
16	Y	88.9	5.21E-02	2.45E-01		90Sr	9.92E+04	Ci/d	5.82E+03	1.70E+01	7.55E-05	7.55E-05	g/sec			
17			Bq/hr	Ci/d							Ci/d					
18	106Ru	106	1.31E+09	8.49E-01		F-	1.35E+02	lb/d	8.80E+01	1.53E+00	5.53E-01	2.02E+02	Ci/yr	Ratio to GFC Addition		
19	113mCd	113	2.66E+09	1.72E+00		Cd+2	1.26E+01	lb/d	1.05E+00	1.19E+01	1.44E-01	5.27E+01	Ci/yr	GFC Zr	2.49E+03	lb/day
20	134Cs	134	2.04E+10	1.32E+01		137Cs	1.48E+05	Ci/d	1.19E+01	1.24E+04	1.07E-03	3.90E-01	Ci/yr	CRV Zr	9.09E+00	
21	137mBa	137	6.78E+13	4.40E+04		137Cs	1.48E+05	Ci/d	1.19E+01	1.24E+04	3.55E+00	1.29E+03	Ci/yr	Ratio	3.64E-03	
22	226Ra	226	4.64E+03	3.01E-06		Zr+4	1.25E+02	lb/d	9.09E+00	1.37E+01	2.19E-07	7.99E-05	Ci/yr			
23	227Ac	227	4.42E+06	2.87E-03		Zr+4	1.25E+02	lb/d	9.09E+00	1.37E+01	2.09E-04	7.61E-02	Ci/yr			
24	228Ra	228	7.28E+06	4.72E-03		Zr+4	1.25E+02	lb/d	9.09E+00	1.37E+01	3.44E-04	1.26E-01	Ci/yr			
25	229Th	229	1.27E+06	8.25E-04		232Th	2.34E-02	Ci/d	5.33E-04	4.40E+01	1.88E-05	6.85E-03	Ci/yr			
26	231Pa	231	3.28E+06	2.13E-03		Zr+4	1.25E+02	lb/d	9.09E+00	1.37E+01	1.55E-04	5.65E-02	Ci/yr			
27	232U	232	5.00E+06	3.24E-03		233U	1.90E+00	Ci/d	1.46E-02	1.30E+02	2.49E-05	9.09E-03	Ci/yr			
28	59Ni	59	1.04E+09	6.77E-01		63Ni	6.07E+01	Ci/d	4.35E+01	1.39E+00	4.86E-01	1.77E+02	Ci/yr			
29	79Se	79	5.81E+07	3.77E-02		F-	1.35E+02	lb/d	8.80E+01	1.53E+00	2.45E-02	8.96E+00	Ci/yr			
30	90Y	90	1.52E+13	9.83E+03		90Sr	9.92E+04	Ci/d	5.82E+03	1.70E+01	5.77E+02	2.11E+05	Ci/yr			
31	93Zr	93	3.16E+09	2.05E+00		Zr+4	1.25E+02	lb/d	9.09E+00	1.37E+01	1.49E-01	5.45E+01	Ci/yr			
32	93mNb	93	1.92E+09	1.24E+00		Zr+4	1.25E+02	lb/d	9.09E+00	1.37E+01	9.06E-02	3.31E+01	Ci/yr			
33	242Cm	242	1.59E+08	1.03E-01		243Cm	1.19E+00	Ci/d	2.07E-03	5.75E+02	1.79E-04	6.54E-02	Ci/yr			
34						* Zr+4 feed rates are corrected with the feed to glass former addition ratio										

CALCULATION SHEET

BY: E. Berrios
DATE: 12/22/05

PROJECT: WTP
JOB NO.: 24590
CALC NO.: 24590-WTP-M4C-FRP-00003
SHEET REV: D
SHEET NO.: D-6

SUBJECT: Integrated Baseline Emissions Report Non-SSFM Represented Constituents Emissions Rate Estimation

	A	B	C	D	E	F
1	**Table D-5 LMP06 Calculation**					
2		LFP04		LMP06	LMP06	
3		Mass Rate	Melter	Mass Rate	Mass Rate	
4	Non-Rep Const	g/sec	DF	g/sec	Corrected	Units
5	Be	3.63E-05	200	1.81E-07	1.81E-07	g/sec
6	CN	9.09E-04	40	2.27E-05	2.27E-05	g/sec
7	Co	5.89E-05	200	2.95E-07	2.95E-07	g/sec
8	Mo	9.77E-04	80	1.22E-05	1.22E-05	g/sec
9	Sb	2.39E-04	80	2.99E-06	2.99E-06	g/sec
10	Se	5.05E-03	1.7	2.97E-03	2.97E-03	g/sec
11	Sn	5.80E-05	200	2.90E-07	2.90E-07	g/sec
12	Ta	5.30E-04	250	2.12E-06	2.12E-06	g/sec
13	Tl	3.61E-03	6	6.01E-04	6.01E-04	g/sec
14	U	1.35E-02	200	6.73E-05	6.73E-05	g/sec
15	V	1.69E-04	80	2.12E-06	2.12E-06	g/sec
16	W	4.70E-04	250	1.88E-06	1.88E-06	g/sec
17	Y	7.55E-05	100	7.55E-07	7.55E-07	g/sec
18		Ci/yr		Ci/yr		
19	106Ru	2.02E+02	3.9	5.18E+01	5.18E+01	Ci/yr
20	113mCd	5.27E+01	10	5.27E+00	5.27E+00	Ci/yr
21	134Cs	3.90E-01	2	1.95E-01	1.95E-01	Ci/yr
22	137mBa	1.29E+03	2	6.47E+02	6.47E+02	Ci/yr
23	226Ra	7.99E-05	6	1.33E-05	1.33E-05	Ci/yr
24	227Ac	7.61E-02	1370	5.56E-05	5.56E-05	Ci/yr
25	228Ra	1.26E-01	6	2.09E-02	2.09E-02	Ci/yr
26	229Th	6.85E-03	250	2.74E-05	2.74E-05	Ci/yr
27	231Pa	5.65E-02	1370	4.13E-05	4.13E-05	Ci/yr
28	232U	9.09E-03	200	4.54E-05	4.54E-05	Ci/yr
29	59Ni	1.77E+02	89	1.99E+00	1.99E+00	Ci/yr
30	79Se	8.96E+00	1.7	5.27E+00	5.27E+00	Ci/yr
31	90Y	2.11E+05	100	2.11E+03	2.11E+03	Ci/yr
32	93Zr	5.45E+01	300	1.82E-01	1.82E-01	Ci/yr
33	93mNb	3.31E+01	1000	3.31E-02	3.31E-02	Ci/yr
34	242Cm	6.54E-02	200	3.27E-04	3.27E-04	Ci/yr

CALCULATION SHEET

BY: E. Berrios
DATE: 12/22/05

PROJECT: WTP
JOB NO.: 24590
CALC NO.: 24590-WTP-M4C-FRP-00003
SHEET REV: D
SHEET NO.: D-7

SUBJECT: Integrated Baseline Emissions Report Non-SSFM Represented Constituents Emissions Rate Estimation

	A	B	C	D	E	F	G	H	I	J	K	L	M
1	**Table D-6 LVP01 Calculation**									Unabated LAW VV			
2			Total feed			Representatives			LVP01	Performance	Non-Rep Const	Non-Rep Const	
3	Non-Rep Const	MW	mol/hr	lb/d			Feed Rate	Units	Rate	Factor	g/sec	corrected	Units
4	Be	9.0	1.99E-01	9.47E-02		Zr+4	6.57E-01	g/sec	2.64E-07	2.49E+06	3.80E-08	3.80E-08	g/sec
5	CN	26.0	1.81E-01	2.49E-01		PO4-3	1.70E+00	g/sec	3.47E-08	4.91E+07	5.07E-09	5.07E-09	g/sec
6	Co	58.9	1.44E-01	4.48E-01		60Co	9.63E+01	Ci/d	7.25E-08	1.33E+09	3.37E-10	3.37E-10	g/sec
7	Mo	95.9	6.74E-01	3.41E+00		Bi+3	9.27E-02	g/sec	1.52E-10	6.09E+08	5.60E-09	5.60E-09	g/sec
8	Sb	121.7	1.34E-01	8.59E-01		125Sb	3.18E+02	Ci/d	5.07E-07	6.28E+08	1.37E-09	1.37E-09	g/sec
9	Se	78.9	3.54E-01	1.47E+00		F-	7.10E-01	g/sec	1.46E-08	4.86E+07	3.03E-08	3.03E-08	g/sec
10	Sn	118.7	1.12E-02	7.01E-02		126Sn	1.69E+00	Ci/d	7.97E-09	2.12E+08	3.31E-10	3.31E-10	g/sec
11	Ta	180.9	1.45E-01	1.38E+00		Zr+4	6.57E-01	g/sec	2.64E-07	2.49E+06	5.56E-07	5.56E-07	g/sec
12	Tl	204.3	9.75E-02	1.05E+00		F-	7.10E-01	g/sec	1.46E-08	4.86E+07	2.16E-08	2.16E-08	g/sec
13	U	238.0	2.17E+00	2.72E+01		234U	1.08E-01	Ci/d	3.06E-10	3.54E+08	7.69E-08	7.69E-08	g/sec
14	V	50.9	2.20E-01	5.91E-01		Bi+3	9.27E-02	g/sec	1.52E-10	6.09E+08	9.71E-10	9.71E-10	g/sec
15	W	183.8	1.27E-01	1.23E+00		Zr+4	6.57E-01	g/sec	2.64E-07	2.49E+06	4.93E-07	4.93E-07	g/sec
16	Y	88.9	5.21E-02	2.45E-01		90Sr	9.92E+04	Ci/d	1.75E-04	5.66E+08	4.32E-10	4.32E-10	g/sec
17			Bq/hr	Ci/d							Ci/d		
18	106Ru	106	1.31E+09	8.49E-01		F-	7.10E-01	g/sec	1.46E-08	4.86E+07	1.75E-08	6.37E-06	Ci/yr
19	113mCd	113	2.66E+09	1.72E+00		Cd+2	6.61E-02	g/sec	1.68E-10	3.95E+08	4.36E-09	1.59E-06	Ci/yr
20	134Cs	134	2.04E+10	1.32E+01		137Cs	1.48E+05	Ci/d	4.41E-07	3.36E+11	3.95E-11	1.44E-08	Ci/yr
21	137mBa	137	6.78E+13	4.40E+04		137Cs	1.48E+05	Ci/d	4.41E-07	3.36E+11	1.31E-07	4.78E-05	Ci/yr
22	226Ra	226	4.64E+03	3.01E-06		Zr+4	6.57E-01	g/sec	2.64E-07	2.49E+06	1.21E-12	4.41E-10	Ci/yr
23	227Ac	227	4.42E+06	2.87E-03		Zr+4	6.57E-01	g/sec	2.64E-07	2.49E+06	1.15E-09	4.20E-07	Ci/yr
24	228Ra	228	7.28E+06	4.72E-03		Zr+4	6.57E-01	g/sec	2.64E-07	2.49E+06	1.90E-09	6.92E-07	Ci/yr
25	229Th	229	1.27E+06	8.25E-04		232Th	1.23E-04	Ci/d	1.50E-11	8.22E+06	1.00E-10	3.67E-08	Ci/yr
26	231Pa	231	3.28E+06	2.13E-03		Zr+4	6.57E-01	g/sec	2.64E-07	2.49E+06	8.54E-10	3.12E-07	Ci/yr
27	232U	232	5.00E+06	3.24E-03		233U	1.90E+00	Ci/d	4.38E-10	4.34E+09	7.48E-13	2.73E-10	Ci/yr
28	59Ni	59	1.04E+09	6.77E-01		63Ni	6.07E+01	Ci/d	1.31E-06	4.63E+07	1.46E-08	5.34E-06	Ci/yr
29	79Se	79	5.81E+07	3.77E-02		F-	7.10E-01	g/sec	1.46E-08	4.86E+07	7.74E-10	2.83E-07	Ci/yr
30	90Y	90	1.52E+13	9.83E+03		90Sr	9.92E+04	Ci/d	1.75E-04	5.66E+08	1.74E-05	6.34E-03	Ci/yr
31	93Zr	93	3.16E+09	2.05E+00		Zr+4	6.57E-01	g/sec	2.64E-07	2.49E+06	8.24E-07	3.01E-04	Ci/yr
32	93mNb	93	1.92E+09	1.24E+00		Zr+4	6.57E-01	g/sec	2.64E-07	2.49E+06	5.00E-07	1.82E-04	Ci/yr
33	242Cm	242	1.59E+08	1.03E-01		243Cm	1.19E+00	Ci/d	6.22E-11	1.91E+10	5.38E-12	1.96E-09	Ci/yr

SUBJECT: Integrated Baseline Emissions Report Non-SSFM Represented Constituents Emissions Rate Estimation

	A	B	C	D	E	F	G	H	I	J	K	L	M	N	O
1	**Table D-7 HFP03 Calculation**									Unabated HLW Melter Feed					
2			Total feed			Representatives*			HFP03	Performance	Non-Rep Const	Non-Rep Const			
3	Non-Rep Const	MW	mol/hr	lb/d			Feed Rate	Units	Rate	Factor	g/sec	corrected	Units		
4	Be	9.0	1.99E-01	9.47E-02		Zr+4	1.25E+02	lb/d	1.25E+02	1.00E+00	4.98E-04	4.98E-04	g/sec		
5	CN	26.0	1.81E-01	2.49E-01		PO4-3	3.24E+02	lb/d	1.30E+02	2.50E+00	5.25E-04	5.25E-04	g/sec		
6	Co	58.9	1.44E-01	4.48E-01		60Co	9.63E+01	Ci/d	9.52E+01	1.01E+00	2.33E-03	2.33E-03	g/sec		
7	Mo	95.9	6.74E-01	3.41E+00		Bi+3	1.76E+01	lb/d	1.70E+01	1.04E+00	1.73E-02	1.73E-02	g/sec		
8	Sb	121.7	1.34E-01	8.59E-01		125Sb	3.18E+02	Ci/d	3.05E+02	1.05E+00	4.33E-03	4.33E-03	g/sec		
9	Se	78.9	3.54E-01	1.47E+00		F-	1.35E+02	lb/d	7.32E+01	1.84E+00	4.20E-03	4.20E-03	g/sec		
10	Sn	118.7	1.12E-02	7.01E-02		126Sn	1.69E+00	Ci/d	1.43E+00	1.18E+00	3.13E-04	3.13E-04	g/sec		
11	Ta	180.9	1.45E-01	1.38E+00		Zr+4	1.25E+02	lb/d	1.25E+02	1.00E+00	7.27E-03	7.27E-03	g/sec		
12	Tl	204.3	9.75E-02	1.05E+00		F-	1.35E+02	lb/d	7.32E+01	1.84E+00	3.00E-03	3.00E-03	g/sec		
13	U	238.0	2.17E+00	2.72E+01		234U	1.08E-01	Ci/d	9.95E-02	1.09E+00	1.31E-01	1.31E-01	g/sec		
14	V	50.9	2.20E-01	5.91E-01		Bi+3	1.76E+01	lb/d	1.70E+01	1.04E+00	2.99E-03	2.99E-03	g/sec		
15	W	183.8	1.27E-01	1.23E+00		Zr+4	1.25E+02	lb/d	1.25E+02	1.00E+00	6.45E-03	6.45E-03	g/sec		
16	Y	88.9	5.21E-02	2.45E-01		90Sr	9.92E+04	Ci/d	9.44E+04	1.05E+00	1.22E-03	1.22E-03	g/sec		
17			Bq/hr	Ci/d							Ci/d				
18	106Ru	106	1.31E+09	8.49E-01		F-	1.35E+02	lb/d	7.32E+01	1.84E+00	4.60E-01	1.68E+02	Ci/yr	Ratio to GFC Addition	
19	113mCd	113	2.66E+09	1.72E+00		Cd+2	1.26E+01	lb/d	1.31E+01	9.61E-01	1.79E+00	6.54E+02	Ci/yr	GFC Zr	2.12E+01
20	134Cs	134	2.04E+10	1.32E+01		137Cs	1.48E+05	Ci/d	1.53E+05	9.67E-01	1.37E+01	5.00E+03	Ci/yr	MFPV Zr	1.25E+02
21	137mBa	137	6.78E+13	4.40E+04		137Cs	1.48E+05	Ci/d	1.53E+05	9.67E-01	4.55E+04	1.66E+07	Ci/yr	Ratio	8.55E-01
22	226Ra	226	4.64E+03	3.01E-06		Zr+4	1.25E+02	lb/d	1.25E+02	1.00E+00	3.00E-06	1.10E-03	Ci/yr		
23	227Ac	227	4.42E+06	2.87E-03		Zr+4	1.25E+02	lb/d	1.25E+02	1.00E+00	2.86E-03	1.04E+00	Ci/yr		
24	228Ra	228	7.28E+06	4.72E-03		Zr+4	1.25E+02	lb/d	1.25E+02	1.00E+00	4.72E-03	1.72E+00	Ci/yr		
25	229Th	229	1.27E+06	8.25E-04		232Th	2.34E-02	Ci/d	2.33E-02	1.01E+00	8.21E-04	3.00E-01	Ci/yr		
26	231Pa	231	3.28E+06	2.13E-03		Zr+4	1.25E+02	lb/d	1.25E+02	1.00E+00	2.12E-03	7.76E-01	Ci/yr		
27	232U	232	5.00E+06	3.24E-03		233U	1.90E+00	Ci/d	1.91E+00	9.95E-01	3.26E-03	1.19E+00	Ci/yr		
28	59Ni	59	1.04E+09	6.77E-01		63Ni	6.07E+01	Ci/d	1.76E+01	3.45E+00	1.96E-01	7.16E+01	Ci/yr		
29	79Se	79	5.81E+07	3.77E-02		F-	1.35E+02	lb/d	7.32E+01	1.84E+00	2.04E-02	7.45E+00	Ci/yr		
30	90Y	90	1.52E+13	9.83E+03		90Sr	9.92E+04	Ci/d	9.44E+04	1.05E+00	9.35E+03	3.41E+06	Ci/yr		
31	93Zr	93	3.16E+09	2.05E+00		Zr+4	1.25E+02	lb/d	1.25E+02	1.00E+00	2.05E+00	7.48E+02	Ci/yr		
32	93mNb	93	1.92E+09	1.24E+00		Zr+4	1.25E+02	lb/d	1.25E+02	1.00E+00	1.24E+00	4.54E+02	Ci/yr		
33	242Cm	242	1.59E+08	1.03E-01		243Cm	1.19E+00	Ci/d	1.20E+00	9.89E-01	1.04E-01	3.80E+01	Ci/yr		
34						* Zr+4 feed rates are corrected with the feed to glass former addition ratio									

CALCULATION SHEET

BY: E. Berrios
DATE: 12/22/05

PROJECT: WTP
JOB NO.: 24590
CALC NO.: 24590-WTP-M4C-FRP-00003
SHEET REV: D
SHEET NO.: D-9

SUBJECT: Integrated Baseline Emissions Report Non-SSFM Represented Constituents Emissions Rate Estimation

	A	B	C	D	E	F
1	**Table D-8 HMP06 Calculation**					
2		HFP03		HMP06	HMP06	
3		Mass Rate	Melter	Mass Rate	Mass Rate	
4	Non-Rep Const	g/sec	DF	g/sec	Corrected	
5	Be	4.98E-04	130	3.83E-06	3.83E-06	g/sec
6	CN	5.25E-04	40	1.31E-05	1.31E-05	g/sec
7	Co	2.33E-03	130	1.79E-05	1.79E-05	g/sec
8	Mo	1.73E-02	64.6	2.67E-04	2.67E-04	g/sec
9	Sb	4.33E-03	100	4.33E-05	4.33E-05	g/sec
10	Se	4.20E-03	2.1	2.00E-03	2.00E-03	g/sec
11	Sn	3.13E-04	130	2.41E-06	2.41E-06	g/sec
12	Ta	7.27E-03	130	5.59E-05	5.59E-05	g/sec
13	Tl	3.00E-03	130	2.31E-05	2.31E-05	g/sec
14	U	1.31E-01	130	1.01E-03	1.01E-03	g/sec
15	V	2.99E-03	130	2.30E-05	2.30E-05	g/sec
16	W	6.45E-03	130	4.96E-05	4.96E-05	g/sec
17	Y	1.22E-03	100	1.22E-05	1.22E-05	g/sec
18				Ci/d		
19	106Ru	4.60E-01	3.9	1.18E-01	4.31E+01	Ci/yr
20	113mCd	1.79E+00	10	1.79E-01	6.54E+01	Ci/yr
21	134Cs	1.37E+01	26.6	5.15E-01	1.88E+02	Ci/yr
22	137mBa	4.55E+04	26.6	1.71E+03	6.24E+05	Ci/yr
23	226Ra	3.00E-06	130	2.31E-08	8.43E-06	Ci/yr
24	227Ac	2.86E-03	130	2.20E-05	8.03E-03	Ci/yr
25	228Ra	4.72E-03	130	3.63E-05	1.32E-02	Ci/yr
26	229Th	8.21E-04	130	6.31E-06	2.30E-03	Ci/yr
27	231Pa	2.12E-03	130	1.63E-05	5.97E-03	Ci/yr
28	232U	3.26E-03	130	2.51E-05	9.16E-03	Ci/yr
29	59Ni	1.96E-01	76.2	2.57E-03	9.39E-01	Ci/yr
30	79Se	2.04E-02	2.1	9.72E-03	3.55E+00	Ci/yr
31	90Y	9.35E+03	100	9.35E+01	3.41E+04	Ci/yr
32	93Zr	2.05E+00	81	2.53E-02	9.24E+00	Ci/yr
33	93mNb	1.24E+00	130	9.56E-03	3.49E+00	Ci/yr
34	242Cm	1.04E-01	130	8.02E-04	2.93E-01	Ci/yr

SUBJECT: Integrated Baseline Emissions Report Non-SSFM Represented Constituents Emissions Rate Estimation

	A	B	C	D	E	F	G	H	I	J	K	L	M
1	**Table D-9 HOP10 Calculation**									Unabated HLW VV			
2			Total feed			Representatives			HOP10	Performance	Non-Rep Const	Non-Rep Const	
3	Non-Rep Const	MW	mol/hr	lb/d			Feed Rate	Units	Rate	Factor	g/sec	corrected	Units
4	Be	9.0	1.99E-01	9.47E-02		Zr+4	1.25E+02	lb/d	2.92E-05	4.28E+06	1.16E-10	1.16E-10	g/sec
5	CN	26.0	1.81E-01	2.49E-01		PO4-3	3.24E+02	lb/d	2.60E-05	1.25E+07	1.05E-10	1.05E-10	g/sec
6	Co	58.9	1.44E-01	4.48E-01		60Co	9.63E+01	Ci/d	1.90E-05	5.06E+06	4.66E-10	4.66E-10	g/sec
7	Mo	95.9	6.74E-01	3.41E+00		Bi+3	1.76E+01	lb/d	3.40E-06	5.19E+06	3.46E-09	3.46E-09	g/sec
8	Sb	121.7	1.34E-01	8.59E-01		125Sb	3.18E+02	Ci/d	6.10E-05	5.22E+06	8.66E-10	8.66E-10	g/sec
9	Se	78.9	3.54E-01	1.47E+00		F-	1.35E+02	lb/d	1.48E-05	9.13E+06	8.49E-10	8.49E-10	g/sec
10	Sn	118.7	1.12E-02	7.01E-02		126Sn	1.69E+00	Ci/d	2.87E-07	5.88E+06	6.26E-11	6.26E-11	g/sec
11	Ta	180.9	1.45E-01	1.38E+00		Zr+4	1.25E+02	lb/d	2.92E-05	4.28E+06	1.70E-09	1.70E-09	g/sec
12	Tl	204.3	9.75E-02	1.05E+00		F-	1.35E+02	lb/d	1.48E-05	9.13E+06	6.06E-10	6.06E-10	g/sec
13	U	238.0	2.17E+00	2.72E+01		234U	1.08E-01	Ci/d	1.99E-08	5.44E+06	2.63E-08	2.63E-08	g/sec
14	V	50.9	2.20E-01	5.91E-01		Bi+3	1.76E+01	lb/d	3.40E-06	5.19E+06	5.99E-10	5.99E-10	g/sec
15	W	183.8	1.27E-01	1.23E+00		Zr+4	1.25E+02	lb/d	2.92E-05	4.28E+06	1.51E-09	1.51E-09	g/sec
16	Y	88.9	5.21E-02	2.45E-01		90Sr	9.92E+04	Ci/d	1.89E-02	5.25E+06	2.45E-10	2.45E-10	g/sec
17			Bq/hr	Ci/d							Ci/d		
18	106Ru	106	1.31E+09	8.49E-01		F-	1.35E+02	lb/d	1.48E-05	9.13E+06	9.29E-08	3.39E-05	Ci/yr
19	113mCd	113	2.66E+09	1.72E+00		Cd+2	1.26E+01	lb/d	2.63E-06	4.78E+06	3.60E-07	1.31E-04	Ci/yr
20	134Cs	134	2.04E+10	1.32E+01		137Cs	1.48E+05	Ci/d	3.07E-02	4.83E+06	2.74E-06	1.00E-03	Ci/yr
21	137mBa	137	6.78E+13	4.40E+04		137Cs	1.48E+05	Ci/d	3.07E-02	4.83E+06	9.11E-03	3.33E+00	Ci/yr
22	226Ra	226	4.64E+03	3.01E-06		Zr+4	1.25E+02	lb/d	2.92E-05	4.28E+06	7.03E-13	2.57E-10	Ci/yr
23	227Ac	227	4.42E+06	2.87E-03		Zr+4	1.25E+02	lb/d	2.92E-05	4.28E+06	6.70E-10	2.44E-07	Ci/yr
24	228Ra	228	7.28E+06	4.72E-03		Zr+4	1.25E+02	lb/d	2.92E-05	4.28E+06	1.10E-09	4.03E-07	Ci/yr
25	229Th	229	1.27E+06	8.25E-04		232Th	2.34E-02	Ci/d	4.67E-09	5.02E+06	1.64E-10	6.00E-08	Ci/yr
26	231Pa	231	3.28E+06	2.13E-03		Zr+4	1.25E+02	lb/d	2.92E-05	4.28E+06	4.97E-10	1.82E-07	Ci/yr
27	232U	232	5.00E+06	3.24E-03		233U	1.90E+00	Ci/d	3.82E-07	4.97E+06	6.53E-10	2.38E-07	Ci/yr
28	59Ni	59	1.04E+09	6.77E-01		63Ni	6.07E+01	Ci/d	3.52E-06	1.73E+07	3.92E-08	1.43E-05	Ci/yr
29	79Se	79	5.81E+07	3.77E-02		F-	1.35E+02	lb/d	1.48E-05	9.13E+06	4.12E-09	1.50E-06	Ci/yr
30	90Y	90	1.52E+13	9.83E+03		90Sr	9.92E+04	Ci/d	1.89E-02	5.25E+06	1.87E-03	6.83E-01	Ci/yr
31	93Zr	93	3.16E+09	2.05E+00		Zr+4	1.25E+02	lb/d	2.92E-05	4.28E+06	4.80E-07	1.75E-04	Ci/yr
32	93mNb	93	1.92E+09	1.24E+00		Zr+4	1.25E+02	lb/d	2.92E-05	4.28E+06	2.91E-07	1.06E-04	Ci/yr
33	242Cm	242	1.59E+08	1.03E-01		243Cm	1.19E+00	Ci/d	2.41E-07	4.94E+06	2.09E-08	7.61E-06	Ci/yr

SUBJECT: Integrated Baseline Emissions Report Non-SSFM Represented Constituents Emissions Rate Estimation

	A	B	C	D	E	F	G	H	I	J	K	L	M
1	**Table D-10 PJV32 Calculation**									Unabated HLW RFD/PJM			
2			Total feed			Representatives			PJV32	Performance	Non-Rep Const	Non-Rep Const	
3	Non-Rep Const	MW	mol/hr	lb/d			Feed Rate	Units	Rate	Factor	g/sec	Corrected	Units
4	Be	9.0	1.99E-01	9.47E-02		Zr+4	1.25E+02	lb/d	4.83E-07	2.58E+08	1.93E-12	1.93E-12	g/sec
5	CN	26.0	1.81E-01	2.49E-01		PO4-3	3.24E+02	lb/d	2.04E-06	1.59E+08	8.26E-12	8.26E-12	g/sec
6	Co	58.9	1.44E-01	4.48E-01		60Co	9.63E+01	Ci/d	8.35E-07	1.15E+08	2.04E-11	2.04E-11	g/sec
7	Mo	95.9	6.74E-01	3.41E+00		Bi+3	1.76E+01	lb/d	1.85E-07	9.53E+07	1.88E-10	1.88E-10	g/sec
8	Sb	121.7	1.34E-01	8.59E-01		125Sb	3.18E+02	Ci/d	1.92E-06	1.66E+08	2.73E-11	2.73E-11	g/sec
9	Se	78.9	3.54E-01	1.47E+00		F-	1.35E+02	lb/d	9.03E-06	1.49E+07	5.19E-10	5.19E-10	g/sec
10	Sn	118.7	1.12E-02	7.01E-02		126Sn	1.69E+00	Ci/d	7.51E-09	2.25E+08	1.64E-12	1.64E-12	g/sec
11	Ta	180.9	1.45E-01	1.38E+00		Zr+4	1.25E+02	lb/d	4.83E-07	2.58E+08	2.82E-11	2.82E-11	g/sec
12	Tl	204.3	9.75E-02	1.05E+00		F-	1.35E+02	lb/d	9.03E-06	1.49E+07	3.70E-10	3.70E-10	g/sec
13	U	238.0	2.17E+00	2.72E+01		234U	1.08E-01	Ci/d	8.69E-10	1.25E+08	1.15E-09	1.15E-09	g/sec
14	V	50.9	2.20E-01	5.91E-01		Bi+3	1.76E+01	lb/d	1.85E-07	9.53E+07	3.26E-11	3.26E-11	g/sec
15	W	183.8	1.27E-01	1.23E+00		Zr+4	1.25E+02	lb/d	4.83E-07	2.58E+08	2.50E-11	2.50E-11	g/sec
16	Y	88.9	5.21E-02	2.45E-01		90Sr	9.92E+04	Ci/d	5.94E-04	1.67E+08	7.70E-12	7.70E-12	g/sec
17			Bq/hr	Ci/d							Ci/d		
18	106Ru	106	1.31E+09	8.49E-01		F-	1.35E+02	lb/d	9.03E-06	1.49E+07	5.68E-08	2.07E-05	Ci/yr
19	113mCd	113	2.66E+09	1.72E+00		Cd+2	1.26E+01	lb/d	8.30E-07	1.51E+07	1.14E-07	4.15E-05	Ci/yr
20	134Cs	134	2.04E+10	1.32E+01		137Cs	1.48E+05	Ci/d	3.23E-03	4.58E+07	2.89E-07	1.05E-04	Ci/yr
21	137mBa	137	6.78E+13	4.40E+04		137Cs	1.48E+05	Ci/d	3.23E-03	4.58E+07	9.59E-04	3.50E-01	Ci/yr
22	226Ra	226	4.64E+03	3.01E-06		Zr+4	1.25E+02	lb/d	4.83E-07	2.58E+08	1.16E-14	4.25E-12	Ci/yr
23	227Ac	227	4.42E+06	2.87E-03		Zr+4	1.25E+02	lb/d	4.83E-07	2.58E+08	1.11E-11	4.05E-09	Ci/yr
24	228Ra	228	7.28E+06	4.72E-03		Zr+4	1.25E+02	lb/d	4.83E-07	2.58E+08	1.83E-11	6.67E-09	Ci/yr
25	229Th	229	1.27E+06	8.25E-04		232Th	2.34E-02	Ci/d	2.02E-10	1.16E+08	7.12E-12	2.60E-09	Ci/yr
26	231Pa	231	3.28E+06	2.13E-03		Zr+4	1.25E+02	lb/d	4.83E-07	2.58E+08	8.23E-12	3.00E-09	Ci/yr
27	232U	232	5.00E+06	3.24E-03		233U	1.90E+00	Ci/d	1.67E-08	1.14E+08	2.85E-11	1.04E-08	Ci/yr
28	59Ni	59	1.04E+09	6.77E-01		63Ni	6.07E+01	Ci/d	1.25E-07	4.88E+08	1.39E-09	5.07E-07	Ci/yr
29	79Se	79	5.81E+07	3.77E-02		F-	1.35E+02	lb/d	9.03E-06	1.49E+07	2.52E-09	9.19E-07	Ci/yr
30	90Y	90	1.52E+13	9.83E+03		90Sr	9.92E+04	Ci/d	5.94E-04	1.67E+08	5.88E-05	2.15E-02	Ci/yr
31	93Zr	93	3.16E+09	2.05E+00		Zr+4	1.25E+02	lb/d	4.83E-07	2.58E+08	7.94E-09	2.90E-06	Ci/yr
32	93mNb	93	1.92E+09	1.24E+00		Zr+4	1.25E+02	lb/d	4.83E-07	2.58E+08	4.82E-09	1.76E-06	Ci/yr
33	242Cm	242	1.59E+08	1.03E-01		243Cm	1.19E+00	Ci/d	1.05E-08	1.13E+08	9.11E-10	3.32E-07	Ci/yr

CALCULATION SHEET

BY: E. Berrios
DATE: 12/22/05

PROJECT: WTP
JOB NO.: 24590
CALC NO.: 24590-WTP-M4C-FRP-00003
SHEET REV: D
SHEET NO.: D-12

SUBJECT: Integrated Baseline Emissions Report Non-SSFM Represented Constituents Emissions Rate Estimation

	A	B	C	D	E	F	G	H	I	J	K
1	**Table D-11 PVP12 Calculation**										
2		PVP01	PVP12	PVP12							
3		Feed Rate	Feed Rate	Feed Rate							
4	Non-Rep Const	g/sec	g/sec	Corrected	Units						
5	Be	2.47E-09	1.76E-17	0.00E+00	g/sec						
6	CN	8.60E-09	6.14E-17	0.00E+00	g/sec						
7	Co	1.01E-08	7.21E-17	0.00E+00	g/sec						
8	Mo	4.77E-08	3.41E-16	0.00E+00	g/sec	DFs					
9	Sb	1.19E-08	8.52E-17	0.00E+00	g/sec	Caustic				Carbon	Overall
10	Se	3.23E-08	2.31E-16	0.00E+00	g/sec	Scrubber	HEME	HEPA	Oxidizer	Bed	DF
11	Sn	1.05E-09	7.53E-18	0.00E+00	g/sec	3.5	200	200000	1	1	1.40E+08
12	Ta	3.60E-08	2.57E-16	0.00E+00	g/sec						
13	Tl	2.31E-08	1.65E-16	0.00E+00	g/sec						
14	U	6.51E-07	4.65E-15	4.65E-15	g/sec						
15	V	8.27E-09	5.91E-17	0.00E+00	g/sec						
16	W	3.20E-08	2.28E-16	0.00E+00	g/sec						
17	Y	3.40E-09	2.43E-17	0.00E+00	g/sec						
18		Ci/yr	Ci/yr								
19	106Ru	1.29E-03	9.22E-12	9.22E-12	Ci/yr						
20	113mCd	1.86E-03	1.33E-11	1.33E-11	Ci/yr						
21	134Cs	1.31E-02	9.35E-11	9.35E-11	Ci/yr						
22	137mBa	4.34E+01	3.10E-07	3.10E-07	Ci/yr						
23	226Ra	5.43E-09	3.88E-17	0.00E+00	Ci/yr						
24	227Ac	5.17E-06	3.70E-14	3.70E-14	Ci/yr						
25	228Ra	8.53E-06	6.09E-14	6.09E-14	Ci/yr						
26	229Th	1.28E-06	9.17E-15	9.17E-15	Ci/yr						
27	231Pa	3.84E-06	2.74E-14	2.74E-14	Ci/yr						
28	232U	5.00E-06	3.57E-14	3.57E-14	Ci/yr						
29	59Ni	1.02E-03	7.31E-12	7.31E-12	Ci/yr						
30	79Se	5.72E-05	4.09E-13	4.09E-13	Ci/yr						
31	90Y	9.48E+00	6.77E-08	6.77E-08	Ci/yr						
32	93Zr	3.71E-03	2.65E-11	2.65E-11	Ci/yr						
33	93mNb	2.25E-03	1.61E-11	1.61E-11	Ci/yr						
34	242Cm	1.58E-04	1.13E-12	1.13E-12	Ci/yr						

SUBJECT: Integrated Baseline Emissions Report Non-SSFM Represented Constituents Emissions Rate Estimation

	A	B	C	D	E	F	G	H	I
1	**Table D-12 PJV11 Calculation**								
2		PJV04	PJV11	PJV11					
3		Mass Rate	Mass Rate	Mass Rate					
4	Non-Rep Const	g/sec	g/sec	Corrected	Units				
5	Be	1.79E-09	1.79E-15	1.79E-15	g/sec				
6	CN	3.06E-09	3.06E-15	3.06E-15	g/sec				
7	Co	8.40E-09	8.40E-15	8.40E-15	g/sec				
8	Mo	6.32E-08	6.32E-14	6.32E-14	g/sec		DFs		
9	Sb	1.58E-08	1.58E-14	1.58E-14	g/sec				Overall
10	Se	2.15E-08	2.15E-14	2.15E-14	g/sec		Demister	HEPA	DF
11	Sn	1.20E-09	1.20E-15	1.20E-15	g/sec		5	200000	1.00E+06
12	Ta	2.62E-08	2.62E-14	2.62E-14	g/sec				
13	Tl	1.54E-08	1.54E-14	1.54E-14	g/sec				
14	U	4.90E-07	4.90E-13	4.90E-13	g/sec				
15	V	1.09E-08	1.09E-14	1.09E-14	g/sec				
16	W	2.32E-08	2.32E-14	2.32E-14	g/sec				
17	Y	4.48E-09	4.48E-15	4.48E-15	g/sec				
18		Ci/yr	Ci/yr						
19	106Ru	8.61E-04	8.61E-10	8.61E-10	Ci/yr				
20	113mCd	2.41E-03	2.41E-09	2.41E-09	Ci/yr				
21	134Cs	1.07E-02	1.07E-08	1.07E-08	Ci/yr				
22	137mBa	3.57E+01	3.57E-05	3.57E-05	Ci/yr				
23	226Ra	3.95E-09	3.95E-15	3.95E-15	Ci/yr				
24	227Ac	3.76E-06	3.76E-12	3.76E-12	Ci/yr				
25	228Ra	6.20E-06	6.20E-12	6.20E-12	Ci/yr				
26	229Th	1.08E-06	1.08E-12	1.08E-12	Ci/yr				
27	231Pa	2.79E-06	2.79E-12	2.79E-12	Ci/yr				
28	232U	4.27E-06	4.27E-12	4.27E-12	Ci/yr				
29	59Ni	5.18E-04	5.18E-10	5.18E-10	Ci/yr				
30	79Se	3.82E-05	3.82E-11	3.82E-11	Ci/yr				
31	90Y	1.25E+01	1.25E-05	1.25E-05	Ci/yr				
32	93Zr	2.69E-03	2.69E-09	2.69E-09	Ci/yr				
33	93mNb	1.63E-03	1.63E-09	1.63E-09	Ci/yr				
34	242Cm	1.36E-04	1.36E-10	1.36E-10	Ci/yr				

	A	B	C	D	E	F	G	H	I	J	K	L	M	N	O	P
1	**Table D-13 LVP18 Calculation**															
2		LMP06			LOP08	LVP01	LVP03	LVP18	LVP18							
3		Mass Rate	SBS	WESP	Mass Rate	Mass Rate	Mass Rate	Mass Rate	Mass Rate							
4	Non-Rep Const	g/sec	DF	DF	g/sec	g/sec	g/sec	g/sec	Corrected	Units						
5	Be	1.81E-07	40	11	4.12E-10	3.80E-08	3.84E-08	1.92E-13	1.92E-13	g/sec						
6	CN	2.27E-05	6.5	20	1.75E-07	5.07E-09	1.80E-07	8.99E-13	8.99E-13	g/sec						
7	Co	2.95E-07	3.2	20	4.60E-09	3.37E-10	4.94E-09	2.47E-14	2.47E-14	g/sec						
8	Mo	1.22E-05	8.7	480	2.93E-09	5.60E-09	8.53E-09	4.26E-14	4.26E-14	g/sec	DFs					
9	Sb	2.99E-06	3.7	12	6.72E-08	1.37E-09	6.86E-08	3.43E-13	3.43E-13	g/sec		Carbon			Caustic	Overall
10	Se	2.97E-03	8.4	100	3.54E-06	3.03E-08	3.57E-06	1.78E-11	1.78E-11	g/sec	HEPA	Bed	SCO	SCR	Scrubber	DF
11	Sn	2.90E-07	40	11	6.59E-10	3.31E-10	9.90E-10	4.95E-15	4.95E-15	g/sec	200000	1	1	1	1	200000
12	Ta	2.12E-06	73	50	5.81E-10	5.56E-07	5.56E-07	2.78E-12	2.78E-12	g/sec						
13	Ti	6.01E-04	73	100	8.23E-08	2.16E-08	1.04E-07	5.20E-13	5.20E-13	g/sec						
14	U	6.73E-05	40	11	1.53E-07	7.69E-08	2.30E-07	1.15E-12	1.15E-12	g/sec						
15	V	2.12E-06	5	860	4.92E-10	9.71E-10	1.46E-09	7.32E-15	7.32E-15	g/sec						
16	W	1.88E-06	73	50	5.15E-10	4.93E-07	4.93E-07	2.47E-12	2.47E-12	g/sec						
17	Y	7.55E-07	40	11	1.72E-09	4.32E-10	2.15E-09	1.07E-14	1.07E-14	g/sec						
18		Ci/yr			Ci/yr	Ci/yr	Ci/yr	Ci/yr								
19	106Ru	5.18E+01	3.6	4	3.59E+00	6.37E-06	3.59E+00	1.80E-05	1.80E-05	Ci/yr						
20	113mCd	5.27E+00	1.6	80	4.12E-02	1.59E-06	4.12E-02	2.06E-07	2.06E-07	Ci/yr						
21	134Cs	1.95E-01	2.4	30	2.71E-03	1.44E-08	2.71E-03	1.35E-08	1.35E-08	Ci/yr						
22	137mBa	6.47E+02	2.4	30	8.99E+00	4.78E-05	8.99E+00	4.49E-05	4.49E-05	Ci/yr						
23	226Ra	1.33E-05	73	50	3.65E-09	4.41E-10	4.09E-09	2.04E-14	2.04E-14	Ci/yr						
24	227Ac	5.56E-05	73	50	1.52E-08	4.20E-07	4.35E-07	2.18E-12	2.18E-12	Ci/yr						
25	228Ra	2.09E-02	73	50	5.73E-06	6.92E-07	6.42E-06	3.21E-11	3.21E-11	Ci/yr						
26	229Th	2.74E-05	73	50	7.50E-09	3.67E-08	4.42E-08	2.21E-13	2.21E-13	Ci/yr						
27	231Pa	4.13E-05	73	50	1.13E-08	3.12E-07	3.23E-07	1.62E-12	1.62E-12	Ci/yr						
28	232U	4.54E-05	40	11	1.03E-07	2.73E-10	1.04E-07	5.18E-13	5.18E-13	Ci/yr						
29	59Ni	1.99E+00	5.9	20	1.69E-02	5.34E-06	1.69E-02	8.44E-08	8.44E-08	Ci/yr						
30	79Se	5.27E+00	8	100	6.59E-03	2.83E-07	6.59E-03	3.29E-08	3.29E-08	Ci/yr						
31	90Y	2.11E+03	40	11	4.78E+00	6.34E-03	4.79E+00	2.40E-05	2.40E-05	Ci/yr						
32	93Zr	1.82E-01	17	10	1.07E-03	3.01E-04	1.37E-03	6.85E-09	6.85E-09	Ci/yr						
33	93mNb	3.31E-02	73	50	9.06E-06	1.82E-04	1.91E-04	9.57E-10	9.57E-10	Ci/yr						
34	242Cm	3.27E-04	40	11	7.43E-07	1.96E-09	7.45E-07	3.72E-12	3.72E-12	Ci/yr						

BY: E. Berrios
DATE: 12/22/05

CALCULATION SHEET

PROJECT: WTP
JOB NO.: 24590
CALC NO.: 24590-WTP-M4C-FRP-00003
SHEET REV: D
SHEET NO.: D-15

SUBJECT: Integrated Baseline Emissions Report Non-SSFM Represented Constituents Emissions Rate Estimation

	A	B	C	D	E	F	G	H	I	J	K	L	M	N	O	P	Q	R
1	**Table D-14 HOP31 Calculation**																	
2		HMP06			HOP07	HOP10	HOP11		HOP13	HOP31	HOP31							
3		Mass Rate	SBS	WESP	Mass Rate	Mass Rate	Mass Rate	HEME	Mass Rate	Mass Rate	Mass Rate							
4	Non-Rep Const	g/sec	DF	DF	g/sec	g/sec	g/sec	DF	g/sec	g/sec	corrected	Units						
5	Be	3.83E-06	40	11	8.70E-09	1.16E-10	8.82E-09	90	9.80E-11	4.90E-16	0.00E+00	g/sec						
6	CN	1.31E-05	18.1	20	3.62E-08	1.05E-10	3.64E-08	90	4.04E-10	2.02E-15	2.02E-15	g/sec						
7	Co	1.79E-05	3.2	20	2.80E-07	4.66E-10	2.80E-07	100	2.80E-09	1.40E-14	1.40E-14	g/sec	DFs					
8	Mo	2.67E-04	8.7	200	1.54E-07	3.46E-09	1.57E-07	490	3.21E-10	1.60E-15	1.60E-15	g/sec		Carbon	Silver			Overall
9	Sb	4.33E-05	3.7	12	9.74E-07	8.66E-10	9.75E-07	90	1.08E-08	5.42E-14	5.42E-14	g/sec	HEPA	Bed	Mordenite	SCO	SCR	DF
10	Se	2.00E-03	5.9	200	1.70E-06	8.49E-10	1.70E-08	490	3.46E-09	1.73E-14	1.73E-14	g/sec	200000	1	1	1	1	200000
11	Sn	2.41E-06	40	11	5.47E-09	6.26E-11	5.54E-09	90	6.15E-11	3.08E-16	0.00E+00	g/sec						
12	Ta	5.59E-05	427	20	6.55E-09	1.70E-09	8.25E-09	470	1.76E-11	8.78E-17	0.00E+00	g/sec						
13	Tl	2.31E-05	427	20	2.70E-09	6.06E-10	3.31E-09	470	7.04E-12	3.52E-17	0.00E+00	g/sec						
14	U	1.01E-03	40	11	2.30E-06	2.63E-08	2.32E-06	90	2.58E-08	1.29E-13	1.29E-13	g/sec						
15	V	2.30E-05	4.6	370	1.35E-08	5.99E-10	1.41E-08	500	2.83E-11	1.41E-16	0.00E+00	g/sec						
16	W	4.96E-05	427	20	5.81E-09	1.51E-09	7.32E-09	470	1.56E-11	7.79E-17	0.00E+00	g/sec						
17	Y	1.22E-05	40	11	2.78E-08	2.45E-10	2.81E-08	90	3.12E-10	1.56E-15	1.56E-15	g/sec						
18		Ci/yr			Ci/yr	Ci/yr	Ci/yr		Ci/yr	Ci/yr								
19	106Ru	4.31E+01	3.6	20	5.98E-01	3.39E-05	5.98E-01	90	6.65E-03	3.32E-08	3.32E-08	Ci/yr						
20	113mCd	6.54E+01	1.6	80	5.11E-01	1.31E-04	5.11E-01	110	4.65E-03	2.32E-08	2.32E-08	Ci/yr						
21	134Cs	1.88E+02	2.4	30	2.61E+00	1.00E-03	2.61E+00	100	2.61E-02	1.31E-07	1.31E-07	Ci/yr						
22	137mBa	6.24E+05	2.4	30	8.67E+03	3.33E+00	8.67E+03	100	8.67E+01	4.34E-04	4.34E-04	Ci/yr						
23	226Ra	8.43E-06	427	20	9.87E-10	2.57E-10	1.24E-09	470	2.65E-12	1.32E-17	0.00E+00	Ci/yr						
24	227Ac	8.03E-03	427	20	9.41E-07	2.44E-07	1.19E-06	470	2.52E-09	1.26E-14	1.26E-14	Ci/yr						
25	228Ra	1.32E-02	427	20	1.55E-06	4.03E-07	1.95E-06	470	4.16E-09	2.08E-14	2.08E-14	Ci/yr						
26	229Th	2.30E-03	427	20	2.70E-07	6.00E-08	3.30E-07	470	7.02E-10	3.51E-15	3.51E-15	Ci/yr						
27	231Pa	5.97E-03	427	20	6.99E-07	1.82E-07	8.80E-07	470	1.87E-09	9.36E-15	9.36E-15	Ci/yr						
28	232U	9.16E-03	40	11	2.08E-05	2.38E-07	2.11E-05	90	2.34E-07	1.17E-12	1.17E-12	Ci/yr						
29	59Ni	9.39E-01	5.9	20	7.96E-03	1.43E-05	7.98E-03	90	8.86E-05	4.43E-10	4.43E-10	Ci/yr						
30	79Se	3.55E+00	5.9	200	3.01E-03	1.50E-06	3.01E-03	490	6.14E-06	3.07E-11	3.07E-11	Ci/yr						
31	90Y	3.41E+04	40	11	7.76E+01	6.83E-01	7.83E+01	90	8.70E-01	4.35E-06	4.35E-06	Ci/yr						
32	93Zr	9.24E+00	30	10	3.08E-02	1.75E-04	3.10E-02	90	3.44E-04	1.72E-09	1.72E-09	Ci/yr						
33	93mNb	3.49E+00	427	80	1.02E-04	1.06E-04	2.08E-04	110	1.89E-06	9.47E-12	9.47E-12	Ci/yr						
34	242Cm	2.93E-01	40	11	6.65E-04	7.61E-06	6.73E-04	90	7.47E-06	3.74E-11	3.74E-11	Ci/yr						

CALCULATION SHEET

BY: E. Berrios
DATE: 12/22/05

PROJECT: WTP
JOB NO.: 24590
CALC NO.: 24590-WTP-M4C-FRP-00003
SHEET REV: D
SHEET NO.: D-16

SUBJECT: Integrated Baseline Emissions Report Non-SSFM Represented Constituents Emissions Rate Estimation

	A	B	C	D	E	F	G
1	**Table D-15 PJV34 Calculation**						
2		PJV32	PJV34	PJV34			
3		Mass Rate	Mass Rate	Mass Rate			
4	Non-Rep Const	g/sec	g/sec	corrected	Units		
5	Be	1.93E-12	9.64E-18	0.00E+00	g/sec		
6	CN	8.26E-12	4.13E-17	0.00E+00	g/sec		
7	Co	2.04E-11	1.02E-16	0.00E+00	g/sec	DFs	
8	Mo	1.88E-10	9.42E-16	0.00E+00	g/sec		Overall
9	Sb	2.73E-11	1.37E-16	0.00E+00	g/sec	HEPA	DF
10	Se	5.19E-10	2.59E-15	2.59E-15	g/sec	200000	2.00E+05
11	Sn	1.64E-12	8.21E-18	0.00E+00	g/sec		
12	Ta	2.82E-11	1.41E-16	0.00E+00	g/sec		
13	Tl	3.70E-10	1.85E-15	1.85E-15	g/sec		
14	U	1.15E-09	5.74E-15	5.74E-15	g/sec		
15	V	3.26E-11	1.63E-16	0.00E+00	g/sec		
16	W	2.50E-11	1.25E-16	0.00E+00	g/sec		
17	Y	7.70E-12	3.85E-17	0.00E+00	g/sec		
18		Ci/yr	Ci/yr	Ci/d			
19	106Ru	2.07E-05	1.04E-10	1.04E-10	Ci/yr		
20	113mCd	4.15E-05	2.08E-10	2.08E-10	Ci/yr		
21	134Cs	1.05E-04	5.27E-10	5.27E-10	Ci/yr		
22	137mBa	3.50E-01	1.75E-06	1.75E-06	Ci/yr		
23	226Ra	4.25E-12	2.12E-17	0.00E+00	Ci/yr		
24	227Ac	4.05E-09	2.02E-14	2.02E-14	Ci/yr		
25	228Ra	6.67E-09	3.34E-14	3.34E-14	Ci/yr		
26	229Th	2.60E-09	1.30E-14	1.30E-14	Ci/yr		
27	231Pa	3.00E-09	1.50E-14	1.50E-14	Ci/yr		
28	232U	1.04E-08	5.20E-14	5.20E-14	Ci/yr		
29	59Ni	5.07E-07	2.54E-12	2.54E-12	Ci/yr		
30	79Se	9.19E-07	4.60E-12	4.60E-12	Ci/yr		
31	90Y	2.15E-02	1.07E-07	1.07E-07	Ci/yr		
32	93Zr	2.90E-06	1.45E-11	1.45E-11	Ci/yr		
33	93mNb	1.76E-06	8.79E-12	8.79E-12	Ci/yr		
34	242Cm	3.32E-07	1.66E-12	1.66E-12	Ci/yr		

Appendix D

Calculation: WTP Air Emissions Hazardous Organic Constituents Feed Concentrations

24590-WTP-M4C-FRP-00006, Rev B

This page intentionally left blank.

R10593815

Calculation Cover Sheet

ISSUED BY RPP-WTP PDC

RIVER PROTECTION PROJECT-WASTE TREATMENT PLANT	JOB NO.: 24590	
CALC NO. 24590-WTP-M4C-FRP-00006	GROUP Process Eng.	FACILITY Central
SUBJECT WTP Air Emissions Hazardous Organic Constituents Feed Concentrations		
CALCULATION STATUS DESIGNATION	☒ PRELIMINARY ☐ COMMITTED ☐ CONFIRMED ☐ SUPERSEDED BY: _____ ☐ CANCELLED	
SOFTWARE APPLICATIONS ☒ N/A		
QAS: ☐ YES ☐ NO	PROGRAM NAME:	VERSION/RELEASE NO.:

RECORD OF REVISIONS

NO.	REASON FOR REVISION	TOTAL NO. OF SHEETS	LAST SHEET NO	ORIGINATOR	CHECKED	APPROVED/ ACCEPTED	DATE
A	Initial Issue	29	A-8	E. Berrios	D. Blumenkranz	S. Saunders	04/11/05
B	Incorporate revised basis	29	A-8	E. Berrios EB	D. Blumenkranz DB	S. Saunders SS 12/14/05	

Notes/Comments

Calculations were performed on a Compaq Personal Computer using the Microsoft Excel® 2000.

This calculation does not affect any structures, components, or services of the WTP.

This revision has extensive changes therefore no revision bars are used.

Contents

1 Objective 2
2 Inputs 2
3 Background 8
4 Applicable Codes and Standards 9
5 Methodology 9
6 Assumptions 12
7 Calculations 12
7.1 Calculation of anticipated TOC and SOW maximums for all LAW and HLW batches 12
7.2 Calculation of New Hazardous Organic Feed Composition and Target TOC Concentration 14
7.3 Conversion of detection limits and measured concentrations to TOC concentrations 14
7.4 Final Organic Constituent Feed Concentration 15
8 Results and Conclusions 15
9 References 21
9.1 Project Documents 21
9.2 Other Documents 21
10 Attachments 21
Attachment A Detailed Calculations A-1

1 Objective

The objective of this calculation is to develop bounding hazardous organic compounds feed concentrations to be used to estimate the hazardous organic compounds air emissions for the WTP process flues (i.e. Pretreatment vessel vents and PJM/RFD flues, LAW Offgas flue, and HLW offgas and PJM/RFD flues).

2 Inputs

The following data inputs were used to aid in the generation of the organic feed concentrations:

- Organic constituents to be evaluated were obtained from Table 2 of the *Integrated Emissions Baseline Report for the Hanford Tank Waste Treatment and Immobilization Plant* (24590-WTP-RPT-PO-03-008). Since the issuance of this report, there have been changes to the organic constituents list where constituents have been deleted or considered to be Products of Incomplete Combustion (PIC) and therefore are not feed organics. Changes to this list are documented in CCN 097844. These changes decreased the number of hazardous organic constituents in the feed from 250 to 219. Furthermore, three other constituents have been deleted as they are part of the accounted for organic constituents in the feed. These are oxalic acid (144-62-7), formic acid (64-18-6), and acetic acid (64-19-7). This brings the total number of non-accounted for hazardous organic constituents in the feed to 216. The list of constituents is presented below.
- Detection limits or tank composition for each constituent were obtained from Table 8 of the *RPP-WTP Waste Feed Assessment* (RPT-24590-EN00003) and from Table 8-1 of the *Regulatory Data Quality Objectives Optimization Report* (24590-WTP-RPT-MGT-04-001). These limits in mg/l are presented in the table below. The values obtained from 24590-WTP-RPT-MGT-04-001 are marked with an asterisk ("*") in the table.
- The feed concentrations used for oxalic acid (144-62-7), formic acid (64-18-6), and acetic acid (64-19-7) are (24590-WTP-RPT-MGT-04-001):
    - 144-62-7: 3,000 mg/l
    - 64-18-6: 15,000 mg/l
    - 64-19-7: 21,704 mg/l

  As these constituents are part of the accounted for feed, no further calculations are necessary.
- Molecular weights and chemical formulas for each organic constituent were obtained from the website http://chemfinder.cambridgesoft.com. This information is also presented in the table below. Molecular weight for carbon is 12.011 g/mol and for sodium is 23 g/mol.

Hazardous Organic Constituents Data

CAS #	COPC	Chemical Formula	MW	Measured concentration or detection limit (mg/L)
100-00-5	p-Nitrochlorobenzene	C6H4ClNO2	157.56	0.20*
100-21-0	p-Phthalic acid	C8H6O4	166.13	0.3
100-41-4	Ethyl benzene	C8H10	106.16	0.02*
100-42-5	Styrene	C8H8	104.14	0.02*
10061-01-5	cis-1,3-Dichloropropene	C3H4Cl2	110.97	0.02*
10061-02-6	trans-1,3-Dichloropropene	C3H4Cl2	110.97	0.02*
101-55-3	4-Bromophenylphenyl ether	C12H9BrO	249.11	0.3

CALCULATION SHEET

PROJECT: RPP-WTP
JOB NO.: 24590
CALC NO.: 24590-WTP-M4C-FRP-00006
SHEET REV: B
SHEET NO.: 3

BY: E. Berrios
DATE: 11/23/05

SUBJECT: WTP Air Emissions Hazardous Organic Constituents Feed Concentrations

CAS #	COPC	Chemical Formula	MW	Measured concentration or detection limit (mg/L)
101-84-8	Diphenyl ether	C12H10O	170.21	0.066
106-35-4	3-Heptanone	C7H14O	114.19	0.02*
106-42-3	p-Xylene (Dimethyl benzene)	C8H10	106.16	0.04*
106-46-7	1,4-Dichlorobenzene	C6H4Cl2	147.01	0.02*
106-88-7	1,2-Epoxybutane	C4H8O	72.12	0.066
106-93-4	Ethylene dibromide (Dibromethane)	C2H4Br2	187.88	0.02*
106-97-8	Butane	C4H10	58.123	0.04*
106-99-0	1,3-Butadiene	C4H6	54.091	0.02*
107-02-8	Acrolein	C3H4O	56.06	0.03*
107-05-1	3-Chloropropene (Allyl chloride)	C3H5Cl	76.526	0.02*
107-06-2	1,2-Dichloroethane (Ethylene chloride)	C2H4Cl2	98.96	0.02*
107-12-0	Propionitrile	C3H5N	55.079	0.05*
107-13-1	Acrylonitrile	C3H3N	53.06	0.10*
107-18-6	2-Propene-1-ol	C3H6O	58.08	0.3
107-31-3	Formic acid, methyl ester	C2H4O2	60.05	0.3
107-66-4	Dibutylphosphate	C8H19O4P	210.21	0.3
107-87-9	2-Pentanone	C5H10O	86.133	0.10*
108-03-2	1-Nitropropane	C3H7NO2	89.09	0.3
108-05-4	Vinyl acetate	C4H6O2	86.09	0.3
108-10-1	Hexone (4-Methyl-2-pentanone or MIBK)	C6H12O	100.16	0.04*
108-20-3	Bis(isopropyl)ether	C6H14O	102.18	0.066
108-38-3	m-Xylene (Dimethyl benzene)	C8H10	106.16	0.04*
108-39-4	m-Cresol	C7H8O	108.13	0.066
108-87-2	Methylcyclohexane	C7H14O	98.188	0.04*
108-88-3	Toluene	C7H8	92.13	0.02*
108-90-7	Chlorobenzene	C6H5Cl	112.56	0.02*
108-93-0	Cyclohexanol	C6H12O	100.16	0.066
108-94-1	Cyclohexanone	C6H10O	98.2	0.07*
108-95-2	Phenol	C6H6O	94.11	0.3*
109-66-0	n-Pentane	C5H12	72.15	0.06*
109-99-9	Tetrahydrofuran	C4H8O	72.1	0.02*
110-12-3	5-Methyl-2-hexanone	C7H14O	114.19	0.02*
110-43-0	2-Heptanone	C7H14O	114.19	0.02*
110-54-3	n-Hexane	C6H14	86.177	0.04*
110-62-3	n-Valeraldehyde	C5H10O	86.13	0.3
110-82-7	Cyclohexane	C6H12	84.161	0.03*
110-83-8	Cyclohexene	C6H10	82.145	0.02*
110-86-1	Pyridine	C5H5N	79.1	0.092*
111-65-9	n-Octane	C8H18	114.23	0.04*
111-76-2	Ethylene glycol monobutyl ether	C6H14O2	118	0.3
111-84-2	n-Nonane	C9H20	128.26	0.04*
117-81-7	Bis(2-ethylhexyl)phthalate (DEHP)	C24H38O4	390.56	0.3
117-84-0	n-Dioctyl phthalate	C24H38O4	390.56	0.3

CALCULATION SHEET

PROJECT: RPP-WTP
JOB NO.: 24590
CALC NO.: 24590-WTP-M4C-FRP-00006
SHEET REV: B
SHEET NO.: 4

BY: E. Berrios
DATE: 11/23/05

SUBJECT: WTP Air Emissions Hazardous Organic Constituents Feed Concentrations

CAS #	COPC	Chemical Formula	MW	Measured concentration or detection limit (mg/L)
120-12-7	Anthracene	C14H10	178.22	0.3
120-82-1	1,2,4-Trichlorobenzene	C6H3Cl3	181.46	0.03*
120-83-2	2,4-Dichlorophenol	C6H4Cl2O	163.01	0.3
121-44-8	Triethylamine	C6H15N	101.19	0.066
121-69-7	Dimethylaniline	C8H11N	121.18	0.066
122-39-4	N,N-Diphenylamine	C12H11N	169.23	0.10*
123-19-3	4-Heptanone	C7H14O	114.19	0.02*
123-38-6	n-Propionaldehyde	C3H6O	58.08	0.09*
123-51-3	3-Methyl-1-butanol	C5H12O	88.15	0.066
123-86-4	Acetic acid n-butyl ester	C6H12O2	116.16	0.001*
123-91-1	1,4-Dioxane	C4H8O2	88.1	0.01*
126-73-8	Tributyl phosphate	C12H27O4P	266.32	0.2*
126-98-7	2-Methyl-2-propenenitrile (Methacrylonitrile)	C4H5N	67.09	0.04*
127-18-4	Perchloroethylene (tetrachloroethylene)	C2CL4	165.85	0.02*
127-19-5	N,N-Dimethylacetamide	C4H9NO	87.12	0.066
128-37-0	2,6-Bis(tert-butyl)-4-methylphenol	C15H24O	220.35	0.1*
129-00-0	Pyrene	C16H10	202.24	0.3
1321-64-8	Pentachloronaphthalene	C10H3Cl5	300.4	0.3
1321-65-9	Trichloronaphthalene	C10H5Cl3	231.51	0.3
132-64-9	Dibenzofuran	C12H8O	168.19	0.3
1335-87-1	Hexachloronaphthalene	C10H2Cl6	334.84	0.3
1335-88-2	Tetrachloronaphthalene	C10H4Cl4	265.95	0.3
1336-36-3	Polychlorinated biphenyls (PCBs)	**	322	0.0023
141-78-6	Acetic acid ethyl ester (Ethyl acetate)	C4H8O2	88.1	0.001*
141-79-7	4-Methyl-3-penten-2-one	C6H10O	98.16	0.3
142-82-5	n-Heptane	C7H16	100.2	0.05*
156-60-5	trans-1,2-Dichloroethylene	C2H2Cl2	96.95	0.066
1634-04-4	Methyl tert-butyl ether	C5H12O	88.15	0.066
189-55-9	Dibenzo[a,i]pyrene	C24H14	302.37	0.3
189-64-0	Dibenzo[a,h]pyrene	C24H14	302.37	0.3
191-24-2	Benzo(g,h,i)perylene	C22H12	276.34	0.3
191-30-0	Benzo[a,i]pyrene	C24H14	302.37	0.3
192-65-4	Dibenzo[a,e]pyrene	C24H14	302.37	0.3
193-39-5	Indeno(1,2,3-cd)pyrene	C22H12	276.34	0.3
206-44-0	Fluoranthene	C16H10	202.26	0.3
208-96-8	Acenaphthylene	C12H8	152.21	0.3
2234-13-1	Octachloronaphthalene	C10Cl8	403.73	0.001*
224-42-0	Dibenz[a,j]acridine	C21H13N	279.34	0.3
226-36-8	Dibenz[a,h]acridine	C21H13N	279.34	0.3
25551-13-7	Trimethyl benzene	C9H12	120.19	0.066
26140-60-3	Terphenyls	C18H14	230.31	0.3
27154-33-2	Trichlorofluoroethane	C2H2Cl3F	151.4	0.066
287-92-3	Cyclopentane	C5H10	70.134	0.03*

CALCULATION SHEET

PROJECT: RPP-WTP
JOB NO.: 24590
CALC NO.: 24590-WTP-M4C-FRP-00006
SHEET REV: B
SHEET NO.: 5

BY: E. Berrios
DATE: 11/23/05

SUBJECT: WTP Air Emissions Hazardous Organic Constituents Feed Concentrations

CAS #	COPC	Chemical Formula	MW	Measured concentration or detection limit (mg/L)
3697-24-3	5-Methylchrysene	C19H14	242.32	0.3
3825-26-1	Ammonium perfluorooctanoate	C8H4F15NO2	431.1	0.3
4170-30-3	2-Butenaldehyde (2-Butenal or Crotonaldehyde)	C4H6O	70.091	0.07*
50-00-0	Formaldehyde	CH2O	30.03	0.066
50-32-8	Benzo(a)pyrene	C20H12	252.3	0.2*
53-70-3	Dibenzo(a,h)anthracene	C22H14	278.33	0.2*
540-59-0	1,2-Dichloroethylene	C2H2Cl2	96.94	0.066
540-84-1	2,2,4-Trimethylpentane	C8H18	114.23	0.066
541-73-1	1,3-Dichlorobenzene	C6H4Cl2	147.01	0.02*
56-23-5	Carbon tetrachloride	CCl4	153.84	0.02*
563-80-4	3-Methyl-2-butanone	C5H10O	86.133	0.03*
56-49-5	3-Methylcholanthrene	C21H16	268.36	0.3
57-14-7	1,1-Dimethylhydrazine	C2H8N2	60.099	0.3
58-90-2	2,3,4,6-Tetrachlorophenol	C6H2Cl4O	231.9	0.3
591-78-6	2-Hexanone	C6H12O	100.16	0.04*
59-50-7	4-Chloro-3-methylphenol	C7H7ClO	142.58	0.3
59-89-2	N-Nitrosomorpholine	C4H8N2O2	116.12	0.3
602-87-9	5-Nitroacenaphthene	C12H9NO2	199.21	0.3
60-29-7	Ethyl ether	C4H10O	74.12	0.3
603-34-9	Triphenylamine	C18H15N	245.32	0.3
60-34-4	Methylhydrazine	CH6N2	46.072	0.066
60-35-5	Acetamide	C2H5NO	59.07	0.066
621-64-7	Di-n-Propylnitrosamine (N-Nitroso-di-n-propylamine)	C6H14N2O	130.19	0.3
624-83-9	Methyl isocyanate	C2H3NO	57.052	0.066
627-13-4	Nitric acid, propyl ester	C3H7NO3	105.09	0.025*
62-75-9	N-Nitroso-N,N-dimethylamine (Dimethylnitrosamine)	C2H6N2O	74.1	0.30*
630-20-6	1,1,1,2-Tetrachloroethane	C2H2Cl4	167.85	0.066
64-17-5	Ethyl alcohol	C2H6O	46.069	0.07*
67-56-1	Methyl alcohol (Methanol)	CH4O	32.04	0.066
67-63-0	2-Propyl alcohol (Isopropanol; Propan-2-01)	C3H8O	60.096	0.01*
67-64-1	2-Propanone (Acetone)	C3H6O	58.08	0.10*
67-66-3	Chloroform	CHCl3	119.39	0.02*
67-72-1	Hexachloroethane	C2Cl6	236.74	0.3
684-16-2	Hexafluoroacetone	C3F6O	166.02	0.066
71-23-8	n-Propyl alcohol	C3H8O	60.096	0.02*
71-36-3	n-Butyl alcohol	C4H10O	74.1	0.03*
71-43-2	Benzene	C6H6	78.11	0.02*
71-55-6	Methyl chloroform (1,1,1-Trichloroethane)	C2H3Cl3	133.42	0.02*
74-83-9	Bromomethane (Methyl bromide)	CH3Br	94.95	0.02*
74-87-3	Chloromethane (Methyl chloride)	CH3Cl	50.49	0.02*
74-97-5	Bromochloromethane	CH2BrCl	129.39	0.066
74-99-7	Methylacetylene	C3H4	40.07	0.3
75-00-3	Chloroethane	C2H5Cl	64.52	0.02*

CALCULATION SHEET

PROJECT: RPP-WTP
JOB NO.: 24590
CALC NO.: 24590-WTP-M4C-FRP-00006
SHEET REV: B
SHEET NO.: 6

BY: E. Berrios
DATE: 11/23/05

SUBJECT: WTP Air Emissions Hazardous Organic Constituents Feed Concentrations

CAS #	COPC	Chemical Formula	MW	Measured concentration or detection limit (mg/L)
75-01-4	Vinyl chloride (1-Chloroethene)	C2H3Cl	62.5	0.02*
75-05-8	Acetonitrile	C2H3N	41.05	0.05*
75-07-0	Acetaldehyde	C2H4O	44.05	0.3
75-09-2	Dichloromethane (Methylene chloride)	CH2Cl2	84.94	0.02*
75-12-7	Formamide	CH3NO	45.04	0.3
75-15-0	Carbon disulfide	CS2	76.14	0.03*
75-21-8	Ethylene oxide (Oxirane)	C2H4O	44.05	0.01*
75-27-4	Bromodichloromethane	CHBrCl2	163.83	0.066
75-34-3	1,1-Dichloroethane	C2H4Cl2	98.97	0.02*
75-35-4	1,1-Dichloroethene (Vinylidene chloride)	C2H2Cl2	96.95	0.04*
75-43-4	Dichlorofluoromethane	CHCl2F	102.92	0.02*
75-45-6	Chlorodifluoromethane	CHClF2	86.47	0.02*
75-50-3	Trimethylamine	C3H9N	59.11	0.066
75-52-5	Nitromethane	CH3NO2	61.04	0.3
75-55-8	2-Methylaziridine	C3H7N	57.1	0.3
75-61-6	Difluorodibromomethane	CBr2F2	209.82	0.066
75-63-8	Trifluorobromomethane	CBrF3	148.91	0.066
75-65-0	2-Methyl-2-propanol	C4H10O	74.122	0.04*
75-69-4	Trichlorofluoromethane	CCl3F	137.38	0.03*
75-71-8	Dichlorodifluoromethane	CCl2F2	120.92	0.04*
76-03-9	Trichloroacetic acid	C2HCl3O2	163.39	0.066
76-11-9	1,1,1,2-Tetrachloro-2,2-difluoroethane	C2Cl4F2	203.83	0.3
76-12-0	1,1,2,2-Tetrachloro-1,2-difluoroethane	C2Cl4F2	203.83	0.3
76-13-1	1,2,2-Trichloro-1,1,2-trifluoroethane (Freon 113)	C2Cl3F3	187.38	0.04*
76-14-2	1,2-Dichloro-1,1,2,2-tetrafluoroethane	C2Cl2F4	170.92	0.05*
76-15-3	Chloropentafluoroethane	C2ClF5	154.47	0.066
78-83-1	2-Methylpropyl alcohol (Isobutyl alcohol)	C4H10O	74.12	0.3
78-87-5	1,2-Dichloropropane	C3H6Cl2	112.99	0.02*
78-92-2	1-Methylpropyl alcohol (2-Butanol)	C4H10O	74.122	0.02*
78-93-3	Methyl ethyl ketone (MEK, 2-Butanone)	C4H8O	72.1	0.06*
79-00-5	1,1,2-Trichloroethane	C2H3Cl3	133.42	0.04*
79-01-6	Trichloroethylene	C2HCl3	131.4	0.04*
79-09-4	Propionic acid	C3H6O2	74.08	0.3
79-10-7	2-Propenoic acid	C3H4O2	72.06	0.3
79-20-9	Methyl acetate	C3H6O2	74.08	0.3
79-34-5	1,1,2,2-Tetrachloroethane	C2H2Cl4	167.86	0.0001*
83-32-9	Acenaphthene	C12H10	154.21	0.3
84-66-2	Diethyl phthalate	C12H14O4	222.24	0.3
84-74-2	Dibutyl phthalate	C16H22O4	278.34	0.3
85-01-8	Phenanthrene	C14H10	178.22	0.3
85-68-7	Butylbenzyl phthalate	C19H20O4	312.39	0.3
86-73-7	Fluorene	C13H10	166.22	0.3
87-68-3	Hexachlorobutadiene	C4Cl6	260.76	0.04*

CALCULATION SHEET

PROJECT: RPP-WTP
JOB NO.: 24590
CALC NO.: 24590-WTP-M4C-FRP-00006
SHEET REV: B
SHEET NO.: 7

BY: E. Berrios
DATE: 11/23/05

SUBJECT: WTP Air Emissions Hazardous Organic Constituents Feed Concentrations

CAS #	COPC	Chemical Formula	MW	Measured concentration or detection limit (mg/L)
88-06-2	2,4,6-Trichlorophenol	C6H3Cl3O	197.46	0.3
88-72-2	2-Nitrotoluene	C7H7NO2	137.13	0.066
88-75-5	2-Nitrophenol	C6H5NO3	139.11	0.3
88-89-1	Picric acid	C6H3N3O7	229.11	0.3
91-20-3	Naphthalene	C10H8	128.16	0.01
91-22-5	Quinoline	C9H7N	129.16	0.3
91-58-7	2-Chloronapthalene	C10H7Cl	162.61	0.3
92-52-4	1,1`-Biphenyl	C12H10	154.21	0.2*
92-93-3	4-Nitrobiphenyl	C12H9N02	199.21	0.3
95-13-6	Indene	C9H8	116.16	0.3
95-47-6	o-Xylene	C8H10	106.16	0.02*
95-48-7	o-Cresol (2-Methylphenol)	C7H8O	108.13	0.066
95-49-8	2-Chlorotoluene	C7H7Cl	126.59	0.3
95-50-1	o-Dichlorobenzene (1,2-Dichlorobenzene)	C6H4Cl2	147.01	0.02*
95-57-8	2-Chlorophenol	C6H5ClO	128.56	0.3
95-95-4	2,4,5-Trichlorophenol	C6H3Cl3O	197.46	0.3
96-18-4	1,2,3-Trichloropropane	C3H5Cl3	147.43	0.004
96-22-0	3-Pentanone	C5H10O	86.133	0.1*
96-69-5	Bis(3-tert-butyl-4-hydroxy-6-methyl-phenyl)sulfide	C22H30O2S	358.54	0.3
98-51-1	p-tert-Butyltoluene	C11H16	148.25	0.3
98-82-8	Cumene	C9H12	120.19	0.3
98-83-9	alpha-Methylstyrene	C9H10	118.18	0.066
98-86-2	Acetophenone	C8H8O	120.5	0.2*
98-95-3	Nitrobenzene	C6H5NO2	123.11	0.2*

* Values from 24590-WTP-RPT-MGT-04-001.

**1336-36-3 is a PCB from which 14 coplanar PCBs are calculated. One percent of 1336-36-3 feed concentration is considered to be the coplanar PCBs feed concentration.

- Batch conditions for all WTP Phase I tanks were obtained from the latest *Tank Farm Contractor Operation and Utilization Plan* (TFCOUP) (CHG 2005). Data used includes batch specific gravity, sodium concentration, and total organic carbon (TOC) concentration. HLW data was obtained from Tables C-1, C-3, and C-5. LAW data was obtained from Table D-2. The data used is presented in the tables below.

HLW Batch Data

Batch	1	2	3	4
Liquid SPG	1.09	1.28	1.48	1.22
Solid SPG	3.00	3.00	3.00	3.00
Liquid Na mol/l	1.37	4.44	8.56	3.84
Liquid TOC mol/l	3.97E-02	3.89E-02	1.95E-01	8.27E-02
Solid Na g/g solids	1.27E-01	4.84E-02	8.18E-02	1.19E-01
Solid TOC g/g solids	9.59E-03	9.59E-04	4.59E-03	1.71E-02

LAW Batch Data

Batch	SPG	Na (mol/l)	TOC (mol/l)
1	1.394	6.83	1.98E-01
2	1.470	9.19	2.71E-01
3	1.376	8.39	5.19E-01
4	1.485	9.85	2.97E-01
5	1.408	6.94	1.68E-01
6	1.394	6.93	1.67E-01
7	1.314	7.00	1.45E+00
8	1.314	6.99	1.44E+00
9	1.316	6.80	1.49E-01
10	1.437	7.00	1.90E-01
11	1.382	8.16	2.55E+00
12	1.464	9.69	4.81E-01
13	1.414	8.66	2.54E-01
14	1.352	6.98	1.25E-01
15	1.516	7.00	6.94E-02
16	1.394	6.99	2.15E-01
17	1.402	7.00	2.08E-01

- Statement of Work (SOW) maximums for TOC on LAW and HLW feed streams and Na for HLW stream are (DOE, 2000):
  - LAW: 0.5 mol TOC / mol Na (Table TS-7.1)
  - HLW: 11 g TOC / 100 g waste oxides (Table TS-8.2)
    19 g Na / 100 g waste oxides (Table TS-8.4)
- Per Section 4.2 of the *RPP-WTP Waste Feed Assessment* (RPT-24590-EN00003), the maximum TOC weight percent in the HLW and LAW feeds will be 4 wt % for air emissions purposes. This was based on providing sufficient margin for bounding conditions. Data from the latest TFCOUP (CHG 2005) shows that the maximum TOC value expected for the WTP Phase I tanks is lower than 4 wt% TOC. Therefore, the maximum TOC wt% per TFCOUP (CHG 2005) plus a contingency factor will be used as the basis for this calculation.
- Per Section 4.3 of the *RPP-WTP Waste Feed Assessment* (RPT-24590-EN00003), of the LAW and HLW TOC feed, 87.5% is non-hazardous organic constituents. The remainder, 12.5%, is assigned as hazardous organic constituents.

3 Background

Two hundred and fifty hazardous organic compounds were selected to be evaluated for the WTP air emissions profile. This list of organic compounds was selected with consideration to guidance provided in the *Human Health Risk Assessment Protocol for Hazardous Waste Combustion Facilities* (EPA 1998), the *Screening Level Ecological Risk Assessment Protocol for Hazardous Waste Combustion Facilities* (EPA 1999), and through interactions with EPA Region 10 and the Washington State Department of Ecology. The original development of the air emissions organic feed concentrations was documented in the *RPP-WTP Waste Feed Assessment* (RPT-24590-EN00003). Since then the hazardous organic constituents list has been updated, in agreement with the regulatory agencies, and has decreased the number of hazardous organic constituents in the feed to 216. Based on this list of selected hazardous organic constituents, feed concentrations for each constituent have to be updated to support the air

emissions profile. This calculation provides these feed concentrations and supercedes the data provided in RPT-24590-EN00003.

4 Applicable Codes and Standards

N/A

5 Methodology

The same methodology used to estimate the hazardous organic feed concentration in the *RPP-WTP Waste Feed Assessment* (RPT-24590-EN00003) is used here.

- First, the TOC weight percent for each batch to be processed during Phase I of the WTP was calculated and compared to the equivalent TOC weight percent for that batch at SOW maximum. This was done to ensure that the batches are at or below the SOW maximum and also to determine what would be the maximum expected TOC wt% in any of the batches from the WTP Phase I. This TOC wt% is then used as the basis to develop the organic constituents air emissions feed concentrations. Data from the TFCOUP (CHG 2005) was used. The anticipated TOC was calculated the following way:

  For the LAW supernate, the density (ρ), sodium concentration, and TOC concentration was determined for each batch. The TOC mol/mol Na concentration for the batch was calculated by dividing the TOC concentration by the Na concentration:

$$\frac{X\frac{molTOC}{l}}{X\frac{molNa}{l}} = X\frac{molTOC}{molNa}$$

  The TOC weight percent for the batch was calculated the following way:

$$\frac{X\frac{molTOC}{molNa} * X\frac{molNa}{l} * 12.011\frac{gTOC}{molTOC}}{\rho\frac{g}{cc} * 1000\frac{cc}{l}} * 100\% = \text{X wt\% TOC}$$

  The maximum TOC wt% for that batch was calculated per SOW specifications the following way:

$$\frac{0.5\frac{molTOC}{molNa} * X\frac{molNa}{l} * 12.011\frac{gTOC}{molTOC}}{\rho\frac{g}{cc} * 1000\frac{cc}{l}} * 100\% = \text{X wt\% TOC @ SOW maximum}$$

For the HLW liquids, the same calculation method was used. The HLW supernate is assumed to have the same SOW maximum as the LAW supernate. For the HLW solids, the equivalent SOW maximum TOC mol/mol Na was calculated as follows:

TOC SOW max: 11 g / 100 g oxides
Na SOW max: 19 g / 100 g oxides
TOC MW: 12.011 g/mole
Na NW: 23 g/mole
Equivalent mol TOC/mol Na:

$$\frac{\frac{11gTOC}{100goxides} * \frac{moleTOC}{12.011gTOC}}{\frac{19gNa}{100goxides} * \frac{molNa}{23gNa}} = 1.1\, molTOC/molNa$$

For the HLW solids, the TOC wt% calculation for each batch was performed as follows:

Na g/g solids was converted to mol/l the following way:

$$X\frac{gNa}{gsolids} * \rho\frac{gsolids}{cc} * 1000\frac{cc}{l} * \frac{molNa}{23gNa} = X\frac{molNa}{l}$$

TOC g/g solids were converted to mol/l the same way:

$$X\frac{gTOC}{gsolids} * \rho\frac{gsolids}{cc} * 1000\frac{cc}{l} * \frac{molTOC}{12.011g} = X\frac{molTOC}{l}$$

The TOC mol/mol Na amount is then:

$$\frac{X\frac{molTOC}{l}}{X\frac{molNa}{l}} = X\frac{molTOC}{molNa}$$

The TOC wt% for each batch was then calculated the following way:

$$\frac{X\frac{molTOC}{molNa} * X\frac{molNa}{l} * 12.011\frac{gTOC}{molTOC}}{\rho\frac{gsolids}{cc} * 1000\frac{g}{cc}} * 100\% = \text{X wt\% TOC}$$

To compare to SOW maximums, the maximum possible TOC wt% for each batch was calculated the following way:

$$\frac{1.1\frac{molTOC}{molNa} * X\frac{molNa}{l} * 12.011\frac{gTOC}{molTOC}}{\rho\frac{gsolids}{cc} * 1000\frac{cc}{l}} \times 100\% = X \text{ wt\% TOC @ SOW max}$$

- Since the LAW had the highest TOC concentration, the maximum batch concentration from all LAW tanks was selected and used to determine the organic feed concentrations. Next, the target TOC mg/L concentration for air emissions purposes was calculated the following way:
  TOC wt%: 2.22%
  Adding contingency factor or slightly above 10% = 2.5%
  % hazardous organics: Y% (new number calculated in previous step)
  ρ of feed: X g/cc
  ρ of hazardous organic carbon is:

$$\rho\frac{g}{cc} * 0.025 * Y * 1000\frac{cc}{l} * 1000\frac{mg}{g} = X_{target}\frac{mgTOC}{l}$$

- Now that the target mg TOC/l is known, the next step is to convert the organic constituent mg/l concentration to its equivalent mg TOC/l. This is needed so that the concentrations can be scaled up to the target concentration calculated in the previous step. This was done the following way:

  C_xH_y (example of organic constituent)
  Number of carbons in the compound: x
  MW of the compound: Z g/mole
  Detection limit/measured concentration for the compound: Y mg/l
  TOC MW: 12.011 g/mole
  Equivalent TOC concentration for the constituent is:

$$\frac{Y\frac{mg}{l} * xcarbons * 12.011\frac{gTOC}{molTOC}}{Z\frac{g}{mole}} = X\frac{mgTOC}{l}$$

After all the TOC equivalent concentrations were calculated, they were added together and compared to the target TOC mg/l. As the calculated concentration is lower than the target concentration, a scaling factor was applied to the calculated concentrations so that the goal concentration was reached. The scaling factor was calculated the following way:

$$\frac{X_{target}\frac{mgTOC}{l}}{\sum_{i=1}^{216} X_i\frac{mgTOC}{l}} = ScalingFactor$$

All calculated TOC mg/l concentrations were then multiplied by this scaling factor to arrive to the final desired mg TOC/l. The new TOC mg/l concentration was converted back to the organic compound mg/l concentration the following way:

$$X\frac{mgTOC}{l} * Z\frac{g}{mole} * \frac{molTOC}{12.011gTOC} * \frac{1}{Xcarbons} = Y_{bounding}\frac{mg}{l}organic$$

This is the final feed concentration for the hazardous organic constituent.

6 Assumptions

Assumptions Not Requiring Verification

The assumed TOC of the waste will be the maximum TOC wt% from any of the batches from the WTP Phase I per the latest version of the TFCOUP (CHG 2005). Since selected hazardous constituents from feed have been eliminated (CCN 097844), it is assumed that the percentage of accounted for organic constituents (e.g. oxalate, etc.) increases to 90 % (from 87.5%) of the maximum wt% TOC in the feed, while the remaining 10 % of the maximum wt% TOC in the feed is assumed to be hazardous organic constituents. This equates to a drop of 2.5% of the unaccounted for hazardous organic constituents in the feed. LAW and HLW feeds are assumed to contain equal concentrations of unaccounted for hazardous organic constituents. To account for uncertainty associated with this assumption, feed concentrations less than 1 part-per-million (ppm) are rounded to the nearest 1/10th ppm, feed concentrations between 0 and 10 ppm are rounded to single ppm levels, and feed concentrations in excess of 10 ppm are round up to the nearest 10 ppm.

7 Calculations

7.1 Calculation of anticipated TOC and SOW maximums for all LAW and HLW batches

This section calculates the anticipated TOC weight percent for all the WTP Phase I batches and also calculates the equivalent weight percent based on SOW maximums. This is done to determine the maximum TOC wt% per batch to be used as the basis for the organic feed concentrations in this calculation and to make sure that the batches are at or below the SOW maximum. Only the calculation for one batch in the categories of LAW supernate, HLW supernate, and HLW solids are shown as the rest of the calculations are identical. The calculations are presented in Attachment A Tables 1, 2, and 3.

7.1.1 LAW Batches

Refer to Attachment A Table 1 for this calculation. The calculation for LAW batch LAW-1 is shown here, as the rest of the calculations are the same. From section 2, the batch data for density, sodium concentration, and TOC concentration was obtained. For this batch:
Density: 1.39 g/cc (cell B6)
Na: 6.83 mol/l (cell B7)
TOC: 0.198 mol/l
The equivalent TOC mol/mol Na concentration is:

(0.198 mol TOC/l) / (6.83 mol Na/l) = 2.90E-02 mol TOC/mol Na (cell B8)

The equivalent TOC weight percent for this batch is:

[(2.90E-02 mol TOC/mol Na) × (6.83 mol Na/l) × (12.011 g TOC/mol TOC)] / [(1.39 g/cc)×(1000 cc/l)] × 100% = 0.17% (cell B9)

The equivalent TOC weight percent for this batch at SOW maximum concentration is:
[(0.5 mol TOC/mol Na) × (6.83 mol Na/l) × (12.011 g TOC/mol TOC)] / [(1.39 g/cc)×(1000 cc/l)] × 100% = 2.94% (cell B10)

Therefore, this batch is below the SOW maximum.

7.1.2 HLW Supernate Batches

Refer to Attachment A Table 2 for this calculation. The calculation for HLW batch HLW-1 is shown here, as the rest of the calculations are the same. From section 2, the batch data for density, sodium concentration, and TOC concentration was obtained. For this stream:
Density: 1.09 g/cc (cell B5)
Na: 1.37 mol/l (cell B6)
TOC: 3.97E-02 mol/l
The equivalent TOC mol/mol Na concentration is:

(3.97E-02 mol TOC/l) / (1.37 mol Na/l) = 2.90E-02 mol TOC/mol Na (cell B7)

The equivalent TOC weight percent for this batch is:

[(2.90E-02 mol TOC/mol Na) × (1.37 mol Na/l) × (12.011 g TOC/mol TOC)] / [(1.09 g/cc)×(1000 cc/l)] ×100% = 0.04% (cell B8)

The equivalent TOC weight percent for this batch at SOW maximum concentration is:

[(0.5 mol TOC/mol Na) × (1.37 mol Na/l) × (12.011 g TOC/mol TOC)] / [(1.09 g/cc)×(1000 cc/l)] ×100% = 0.75% (cell B9)

Therefore, this batch is below the SOW maximum.

7.1.3 HLW Solids Batches

Refer to Attachment A Table 3 for this calculation. The calculation for HLW batch HLW-1 is shown here, as the rest of the calculations are the same. From section 2, the batch data for density, sodium concentration, and TOC concentration was obtained. For this stream:
Density: 3 g/cc (cell B5)
Na: 0.127 g/g solids (cell B6)
TOC: 9.59E-03 g/g solids (cell B8)
Converting Na g/g solids to mol/l:

Na MW: 23 g/mol
0.127 g Na/g solids × 1 mol Na/23 g Na × 3.00 g solids/cc × 1000 cc/l = 16.6 mol Na/l (cell B7)

Converting TOC g/g solids to mol/l:

TOC MW: 12.011 g/mol
9.59E-03 g TOC/g solids × 1 mol TOC/12.011 g C × 3.00 g solids/cc × 1000 cc/l = 2.4 mol TOC/l (cell B9)

The TOC mol/mol Na concentration is therefore:

(2.4 mol TOC/l) / (16.6 mol Na/l) = 1.45E-01 mol TOC/mol Na (cell B10)

The equivalent TOC weight percent for this batch is:

[(1.45E-01 mol TOC/mol Na) × (16.6 mol Na/l) × (12.011 g TOC/mol TOC)] / [(3.00 g/cc)×(1000 cc/l)] × 100% = 0.96% (cell B11)

The equivalent TOC weight percent for this batch at SOW maximum concentration is:

[(1.1 mol TOC/mol Na) × (16.6 mol Na/l) × (12.011 g TOC/mol TOC)] / [(3.00 g/cc)×(1000 cc/l)] × 100% = 7.3% (cell B12)

Therefore, this batch is below the SOW maximum.

From the results, it is concluded that all batches are below the SOW maximum concentrations and that batch LAW-11 has the highest TOC weight percent (2.22 wt%). Adding a contingency factor of slightly over 10% to this value, the selected organic feed wt% used for the air emissions estimates is 2.5%.

7.2 Calculation of New Hazardous Organic Feed Composition and Target TOC Concentration

As stated in the *RPP-WTP Waste Feed Assessment* (RPT-24590-EN00003), the previous basis for calculating the hazardous organics feed concentrations was the following:

Number of hazardous organic constituents:	250
TOC feed weight percent:	4 wt%
% accounted for, non-hazardous:	87.5%
% not accounted for, assumed hazardous:	12.5%

The new basis for calculating the hazardous organics feed concentrations is the following:

Number of hazardous organic constituents:	216
TOC feed weight percent:	2.5 wt%
% accounted for, non-hazardous:	90%
% not accounted for, assumed hazardous:	10%

With this new basis, the target TOC concentration in the feed can be calculated. Per Table 1, the maximum LAW batch density is 1.38 g/cc (Table 1, cell K14). As stated above, the target TOC weight percent is 2.5 wt% and the amount of this TOC as hazardous organics is 10%. This means that the target hazardous TOC concentration, in mg/l, for this batch is (refer to Table 4 for the calculation):

1.38 g/cc (cell E1) × 1000 cc/l × 1000 mg/g × 0.025 mg TOC/mg (cell I1) × 0.10 = 3460 mg TOC/l (cell E2)

7.3 Conversion of detection limits and measured concentrations to TOC concentrations

Now that the target TOC concentration is set, the concentration for each organic constituent needs to be converted to total organic carbon concentration and scaled up to match the target TOC concentration. Only the calculation for

organic constituent p-Nitrochlorobenzene (CAS# 100-00-5) is shown, as the calculation is the same for the rest of the constituents. All calculations are shown in Attachment A Table 4.

First, the number of carbons for the constituent is determined from the chemical formula. The chemical formula for p-Nitrochlorobenzene is $C_6H_4ClNO_2$ (cell C5), which indicates that the constituent has 6 carbons (cell E5). The constituent's detection limit/measured concentration was taken from Section 2 and shown in cell F5 (0.3 mg/l) along with its molecular weight (157.56 g/mole) shown in cell D5. Converting this concentration to the carbon equivalent concentration gives:

[0.2 mg/l (cell F5) × 6 carbons (cell E5) × 12.011 g C/mol C] / 157.56 g/mol (cell D5) = 9.15E-02 mg C/l (cell G5)

After all the equivalent mg TOC/l were calculated, they were added together to determine the total mg TOC/l. From Attachment A Table 4 cell G207, this number is 18.3 mg TOC/l. This number is below the target TOC of 3460 mg TOC/l (Attachment A Table 4 cell E2). Therefore, a scaling factor was calculated in order to meet the target concentration. This scaling factor is:

3460 mg TOC/l (cell E2) / 18.3 mg TOC/l (cell G211) = 189 (cell I3)

All the calculated TOC concentrations were therefore multiplied by this scaling factor in order to achieve the target concentration. For p-Nitrochlorobenzene this number is:

9.15E-02 mg TOC/l (cell G5) × 189 (cell I3) = 1.73E+01 mg TOC/l (cell H5)

All the new scaled up concentrations were then added together to make sure the target concentration was achieved. This total is shown in cell H211 and is 3460 mg TOC/l that is the same as the target concentration shown in cell E2.

7.4 Final Organic Constituent Feed Concentration

Once the scaled up mg TOC/l concentrations were calculated, they were converted back to the original organic constituent concentration. For p-Nitrochlorobenzene this number is:

1.73E+01 mg TOC/l (cell H5) × 157.56 g/mol (cell D5) / (12.011 g TOC/mol TOC) / (6 carbons, cell E5) = 38 mg/l (cell I5)

Rounding this value to the nearest 10 ppm level (see Section 6), 40 mg/l is the computed feed concentration for LAW and HLW.

8 Results and Conclusions

The hazardous organic feed concentrations for air emissions purposes has been updated by analyzing data from the *Tank Farm Contractor Operation and Utilization Plan* (CHG 2005) and revalidating the original basis for the organic feed composition. The updated concentrations are shown below and will be used in future air emissions profile generation.

CALCULATION SHEET

PROJECT: RPP-WTP
JOB NO.: 24590
CALC NO.: 24590-WTP-M4C-FRP-00006
SHEET REV: B
SHEET NO.: 16

BY: E. Berríos
DATE: 11/23/05

SUBJECT: WTP Air Emissions Hazardous Organic Constituents Feed Concentrations

Updated Hazardous Organic Constituents Air Emissions Feed Concentrations

CAS #	COPC	Feed Concentration (mg/L)
100-00-5	p-Nitrochlorobenzene	40
100-21-0	p-Phthalic acid	60
100-41-4	Ethyl benzene	4
100-42-5	Styrene	4
10061-01-5	cis-1,3-Dichloropropene	4
10061-02-6	trans-1,3-Dichloropropene	4
101-55-3	4-Bromophenylphenyl ether	60
101-84-8	Diphenyl ether	10
106-35-4	3-Heptanone	4
106-42-3	p-Xylene (Dimethyl benzene)	10
106-46-7	1,4-Dichlorobenzene	4
106-88-7	1,2-Epoxybutane	10
106-93-4	Ethylene dibromide (Dibromethane)	4
106-97-8	Butane	10
106-99-0	1,3-Butadiene	4
107-02-8	Acrolein	10
107-05-1	3-Chloropropene (Allyl chloride)	4
107-06-2	1,2-Dichloroethane (Ethylene chloride)	4
107-12-0	Propionitrile	10
107-13-1	Acrylonitrile	20
107-18-6	2-Propene-1-ol	60
107-31-3	Formic acid, methyl ester	60
107-66-4	Dibutylphosphate	60
107-87-9	2-Pentanone	20
108-03-2	1-Nitropropane	60
108-05-4	Vinyl acetate	60
108-10-1	Hexone (4-Methyl-2-pentanone or MIBK)	10
108-20-3	Bis(isopropyl)ether	10
108-38-3	m-Xylene (Dimethyl benzene)	10
108-39-4	m-Cresol	10
108-87-2	Methylcyclohexane	10
108-88-3	Toluene	4
108-90-7	Chlorobenzene	4
108-93-0	Cyclohexanol	10
108-94-1	Cyclohexanone	10
108-95-2	Phenol	60
109-66-0	n-Pentane	10
109-99-9	Tetrahydrofuran	4
110-12-3	5-Methyl-2-hexanone	4
110-43-0	2-Heptanone	4

CALCULATION SHEET

PROJECT: RPP-WTP
JOB NO.: 24590
CALC NO.: 24590-WTP-M4C-FRP-00006
SHEET REV: B
SHEET NO.: 17

BY: E. Berrios
DATE: 11/23/05

SUBJECT: WTP Air Emissions Hazardous Organic Constituents Feed Concentrations

CAS #	COPC	Feed Concentration (mg/L)
110-54-3	n-Hexane	10
110-62-3	n-Valeraldehyde	60
110-82-7	Cyclohexane	10
110-83-8	Cyclohexene	4
110-86-1	Pyridine	20
111-65-9	n-Octane	10
111-76-2	Ethylene glycol monobutyl ether	60
111-84-2	n-Nonane	10
117-81-7	Bis(2-ethylhexyl)phthalate (DEHP)	60
117-84-0	n-Dioctyl phthalate	60
120-12-7	Anthracene	60
120-82-1	1,2,4-Trichlorobenzene	10
120-83-2	2,4-Dichlorophenol	60
121-44-8	Triethylamine	10
121-69-7	Dimethylaniline	10
122-39-4	N,N-Diphenylamine	20
123-19-3	4-Heptanone	4
123-38-6	n-Propionaldehyde	20
123-51-3	3-Methyl-1-butanol	10
123-86-4	Acetic acid n-butyl ester	0.2
123-91-1	1,4-Dioxane	2
126-73-8	Tributyl phosphate	40
126-98-7	2-Methyl-2-propenenitrile (Methacrylonitrile)	10
127-18-4	Perchloroethylene (tetrachloroethylene)	4
127-19-5	N,N-Dimethylacetamide	10
128-37-0	2,6-Bis(tert-butyl)-4-methylphenol	20
129-00-0	Pyrene	60
1321-64-8	Pentachloronaphthalene	60
1321-65-9	Trichloronaphthalene	60
132-64-9	Dibenzofuran	60
1335-87-1	Hexachloronaphthalene	60
1335-88-2	Tetrachloronaphthalene	60
1336-36-3	Polychlorinated biphenyls (PCBs)	0.4
141-78-6	Acetic acid ethyl ester (Ethyl acetate)	0.2
141-79-7	4-Methyl-3-penten-2-one	60
142-82-5	n-Heptane	10
156-60-5	trans-1,2-Dichloroethylene	10
1634-04-4	Methyl tert-butyl ether	10
189-55-9	Dibenzo[a,i]pyrene	60
189-64-0	Dibenzo[a,h]pyrene	60
191-24-2	Benzo(g,h,i)perylene	60
191-30-0	Benzo[a,i]pyrene	60

CALCULATION SHEET

PROJECT: RPP-WTP
JOB NO.: 24590
CALC NO.: 24590-WTP-M4C-FRP-00006
SHEET REV: B
SHEET NO.: 18

BY: E. Berrios
DATE: 11/23/05

SUBJECT: WTP Air Emissions Hazardous Organic Constituents Feed Concentrations

CAS #	COPC	Feed Concentration (mg/L)
192-65-4	Dibenzo[a,e]pyrene	60
193-39-5	Indeno(1,2,3-cd)pyrene	60
206-44-0	Fluoranthene	60
208-96-8	Acenaphthylene	60
2234-13-1	Octachloronaphthalene	0.2
224-42-0	Dibenz[a,j]acridine	60
226-36-8	Dibenz[a,h]acridine	60
25551-13-7	Trimethyl benzene	10
26140-60-3	Terphenyls	60
27154-33-2	Trichlorofluoroethane	10
287-92-3	Cyclopentane	10
3697-24-3	5-Methylchrysene	60
3825-26-1	Ammonium perfluorooctanoate	60
4170-30-3	2-Butenaldehyde (2-Butenal or Crotonaldehyde)	10
50-00-0	Formaldehyde	10
50-32-8	Benzo(a)pyrene	38
53-70-3	Dibenzo(a,h)anthracene	38
540-59-0	1,2-Dichloroethylene	10
540-84-1	2,2,4-Trimethylpentane	10
541-73-1	1,3-Dichlorobenzene	4
56-23-5	Carbon tetrachloride	4
563-80-4	3-Methyl-2-butanone	10
56-49-5	3-Methylcholanthrene	60
57-14-7	1,1-Dimethylhydrazine	60
58-90-2	2,3,4,6-Tetrachlorophenol	60
591-78-6	2-Hexanone	10
59-50-7	4-Chloro-3-methylphenol	60
59-89-2	N-Nitrosomorpholine	60
602-87-9	5-Nitroacenaphthene	60
60-29-7	Ethyl ether	60
603-34-9	Triphenylamine	60
60-34-4	Methylhydrazine	10
60-35-5	Acetamide	10
621-64-7	Di-n-Propylnitrosamine (N-Nitroso-di-n-propylamine)	60
624-83-9	Methyl isocyanate	10
627-13-4	Nitric acid, propyl ester	5
62-75-9	N-Nitroso-N,N-dimethylamine (Dimethylnitrosamine)	60
630-20-6	1,1,1,2-Tetrachloroethane	10
64-17-5	Ethyl alcohol	10
67-56-1	Methyl alcohol (Methanol)	10
67-63-0	2-Propyl alcohol (Isopropanol; Propan-2-01)	2
67-64-1	2-Propanone (Acetone)	20

CALCULATION SHEET

PROJECT: RPP-WTP
JOB NO.: 24590
CALC NO.: 24590-WTP-M4C-FRP-00006
SHEET REV: B
SHEET NO.: 19

BY: E. Berrios
DATE: 11/23/05

SUBJECT: WTP Air Emissions Hazardous Organic Constituents Feed Concentrations

CAS #	COPC	Feed Concentration (mg/L)
67-66-3	Chloroform	4
67-72-1	Hexachloroethane	60
684-16-2	Hexafluoroacetone	10
71-23-8	n-Propyl alcohol	4
71-36-3	n-Butyl alcohol	10
71-43-2	Benzene	4
71-55-6	Methyl chloroform (1,1,1-Trichloroethane)	4
74-83-9	Bromomethane (Methyl bromide)	4
74-87-3	Chloromethane (Methyl chloride)	4
74-97-5	Bromochloromethane	10
74-99-7	Methylacetylene	60
75-00-3	Chloroethane	4
75-01-4	Vinyl chloride (1-Chloroethene)	4
75-05-8	Acetonitrile	10
75-07-0	Acetaldehyde	60
75-09-2	Dichloromethane (Methylene chloride)	4
75-12-7	Formamide	60
75-15-0	Carbon disulfide	10
75-21-8	Ethylene oxide (Oxirane)	2
75-27-4	Bromodichloromethane	10
75-34-3	1,1-Dichloroethane	4
75-35-4	1,1-Dichloroethene (Vinylidene chloride)	10
75-43-4	Dichlorofluoromethane	4
75-45-6	Chlorodifluoromethane	4
75-50-3	Trimethylamine	10
75-52-5	Nitromethane	60
75-55-8	2-Methylaziridine	60
75-61-6	Difluorodibromomethane	10
75-63-8	Trifluorobromomethane	10
75-65-0	2-Methyl-2-propanol	10
75-69-4	Trichlorofluoromethane	10
75-71-8	Dichlorodifluoromethane	10
76-03-9	Trichloroacetic acid	10
76-11-9	1,1,1,2-Tetrachloro-2,2-difluoroethane	60
76-12-0	1,1,2,2-Tetrachloro-1,2-difluoroethane	60
76-13-1	1,2,2-Trichloro-1,1,2-trifluoroethane (Freon 113)	10
76-14-2	1,2-Dichloro-1,1,2,2-tetrafluoroethane	10
76-15-3	Chloropentafluoroethane	10
78-83-1	2-Methylpropyl alcohol (Isobutyl alcohol)	60
78-87-5	1,2-Dichloropropane	4
78-92-2	1-Methylpropyl alcohol (2-Butanol)	4
78-93-3	Methyl ethyl ketone (MEK, 2-Butanone)	10

CALCULATION SHEET

PROJECT: RPP-WTP
JOB NO.: 24590
CALC NO.: 24590-WTP-M4C-FRP-00006
SHEET REV: B
SHEET NO.: 20

BY: E. Berríos
DATE: 11/23/05

SUBJECT: WTP Air Emissions Hazardous Organic Constituents Feed Concentrations

CAS #	COPC	Feed Concentration (mg/L)
79-00-5	1,1,2-Trichloroethane	10
79-01-6	Trichloroethylene	10
79-09-4	Propionic acid	60
79-10-7	2-Propenoic acid	60
79-20-9	Methyl acetate	60
79-34-5	1,1,2,2-Tetrachloroethane	0.02
83-32-9	Acenaphthene	60
84-66-2	Diethyl phthalate	60
84-74-2	Dibutyl phthalate	60
85-01-8	Phenanthrene	60
85-68-7	Butylbenzyl phthalate	60
86-73-7	Fluorene	60
87-68-3	Hexachlorobutadiene	10
88-06-2	2,4,6-Trichlorophenol	60
88-72-2	2-Nitrotoluene	10
88-75-5	2-Nitrophenol	60
88-89-1	Picric acid	60
91-20-3	Naphthalene	2
91-22-5	Quinoline	60
91-58-7	2-Chloronapthalene	60
92-52-4	1,1`-Biphenyl	40
92-93-3	4-Nitrobiphenyl	60
95-13-6	Indene	60
95-47-6	o-Xylene	4
95-48-7	o-Cresol (2-Methylphenol)	10
95-49-8	2-Chlorotoluene	60
95-50-1	o-Dichlorobenzene (1,2-Dichlorobenzene)	4
95-57-8	2-Chlorophenol	60
95-95-4	2,4,5-Trichlorophenol	60
96-18-4	1,2,3-Trichloropropane	1
96-22-0	3-Pentanone	20
96-69-5	Bis(3-tert-butyl-4-hydroxy-6-methyl-phenyl)sulfide	60
98-51-1	p-tert-Butyltoluene	60
98-82-8	Cumene	60
98-83-9	alpha-Methylstyrene	10
98-86-2	Acetophenone	40
98-95-3	Nitrobenzene	40

9 References

9.1 Project Documents

CCN 097844, Meeting Minutes, Lee Bostic, September 3, 2004,"Discuss and resolve the outstanding risk assessment issues in the Risk Assessment Work Plan (RAWP)"

24590-WTP-RPT-MGT-04-001, Rev 0, *Regulatory Data Quality Objective Optimization Report*

24590-WTP-RPT-PO-03-008, Rev 1, *Integrated Emissions Baseline Report for the Hanford Tank Waste Treatment and Immobilization Plant*

RPT-24590-EN00003, Rev 0, *RPP-WTP- Waste Feed Assessment*

9.2 Other Documents

CHG. 2005. *Tank Farm Contractor Operation and Utilization Plan*, HNF-SD-WM-SP-012, Revision 5D. CH2M HILL Hanford Group, Inc, Richland, WA.

DOE. 2000. *DOE Statement of Work*, DE-AC27-01RV14136, US Department of Energy, Office of River Protection, Richland, Washington, Modification No. M047.

EPA.1998. *Human Health Risk Assessment Protocol for Hazardous Waste Combustion Facilities*, EPA530-D-98-001A, Peer Review Draft. US Environmental Protection Agency, Office of Solid Waste and Emergency Response, Washington, DC.

EPA. 1999. *Screening Level Ecological Risk Assessment Protocol for Hazardous Waste Combustion Facilities*, EPA-530-D-99-001A, Peer Review Draft. US Environmental Protection Agency, Office of Solid Waste and Emergency Response, Washington, DC.

http://chemfinder.cambridgesoft.com

10 Attachments

Attachment A: Detailed Calculations