Department of Energy
Richland Operations Office
P.O. Box 550
Richland, Washington 99352

OCT 07 2011

11-EMD-0107

Mr. E. R. Skinnarland
Nuclear Waste Program
State of Washington
Department of Ecology
3100 Port of Benton Boulevard
Richland, Washington 99354

Dear Mr. Skinnarland:

CLASS 1 MODIFICATIONS TO THE HANFORD FACILITY RESOURCE CONSERVATION AND RECOVERY ACT (RCRA) PERMIT, QUARTER ENDING SEPTEMBER 30, 2011

In accordance with Hanford Facility RCRA Permit Condition I.C.3, enclosed for your notification are the Class 1 modifications for the quarter ending September 30, 2011.

These modifications update information in Attachment 2, Legal Description & Operating Boundary, and Part III of Permit Revision 8C. The modifications to Part III pertain to the 325 Building Hazardous Waste Treatment Units and the Waste Treatment and Immobilization Plant. The Class 1 modifications are being made to ensure that activities are conducted in compliance with the Permit. A record of these modifications is maintained in the Hanford Facility Operating Record.

If you have any questions, please contact me or your staff may contact Ray J. Corey, Assistant Manager for Safety and Environment, on (509) 376-0108.

Sincerely,

Matt McCormick
Manager

EMD:ACM

Enclosure

cc w/encl: See Page 2

cc w/encl:
P. G. Harrington, ORP (CD ROM)
Ecology NWP Library (Hardcopy)
Environmental Portal, LMSI, A3-95 (CD ROM)
Administrative Record, TSD: H-0-1, H-0-8, S-3-5, H6-08 (Hard Copy & CD ROM)
HF Operating Record (S. Thompson, MSA, H7-28) (CD ROM)

cc w/o encl:
F. W. Bond, Ecology
E. G. Damberg, PNNL
S. L. Dahl, Ecology
L. L. Fritz, MSA
J. A. Hedges, Ecology
C. A. Johnson, WCH
D. L. McDonald, Ecology

Hanford Facility RCRA Permit Modification Notification Forms

Permit Attachment 2

Legal Description & Operating Boundary

Index

Page 2 of 2: Page 2i

Submitted by Co-Operator:

Lori L. Fritz — Date: 9-18-11

Reviewed by RL Program Office:

Stephen R. Weil — Date: 9-19-2011

Hanford Facility RCRA Permit Modification Notification Form

Unit:	Permit Part
Permit Attachment 2	**Hanford Facility Legal Description & Operating Boundary**

Description of Modification:

Hanford Facility RCRA Permit Attachment 2:
Remove "Official Use Only" marking on page 2i, and replace with "Does Not Contain Official Use Only Information" marking.

Hanford Facility Permit Legal Description.....1
Hanford Facility Permit Operating Boundary.....5

DOES NOT CONTAIN
OFFICIAL USE ONLY INFORMATION
Name/Org: *Suzette Thompson, MSA-EIS* *Date:* *9/12/11*

~~OFFICIAL USE ONLY~~
~~May be exempt from public release under the Freedom of Information Act~~
~~(5 U.S.C. 552)Exemption number(s) Exemption 2~~
~~and category:~~
~~Circumvention of Statute~~
~~Department of Energy review required before public release~~

WAC 173-303-830 Modification Class [1 2]	Class 1	Class 1	Class 2	Class 3
Please mark the Modification Class:	X			

Enter relevant WAC 173-303-830, Appendix I Modification citation number: A.1.
Enter wording of WAC 173-303-830, Appendix I Modification citation:
A.1. General Permit Provisions, Administrative and informational changes

Modification Approved: [X] Yes [ ] No (state reason for denial)
Reason for denial:

Reviewed by Ecology:
R. Skinnarland 9/20/11
R. Skinnarland Date

Permit Attachment 2

Hanford Facility Permit Legal Description & Operating Boundary

Hanford Facility Permit Legal Description 1

Hanford Facility Permit Operating Boundary 5

DOES NOT CONTAIN
OFFICIAL USE ONLY INFORMATION

Name/Org: *Suzette Thompson, MSA-EIS* *Date:* *9/12/11*

OFFICIAL USE ONLY

May be exempt from public release under the Freedom of Information Act

(5 U.S.C. 552)Exemption number(s) and category: Exemption 2

Circumvention of Statute

Department of Energy review required before public release

This page intentionally left blank.

Hanford Facility Permit Legal Description

The following legal description describes the overall facility boundaries of the DOE-RL controlled Hanford Site. Individual TSD units use only a very small portion of the Hanford Site. Additional descriptive information on the individual TSD units is contained in Unit-Specific Portions.

The Hanford Site being a tract of land located in Adams, Grant, Benton, and Franklin Counties, WA, the aforesaid tract being more particularly described as follows:

Commencing at the point of intersection of the E.-W. centerline of sec. 14, T.10N., R.28E. Willamette Meridian, with the western navigation line of the Columbia River;

Thence northerly 200 feet along said line of navigation to the true point of beginning;

Thence North approximately 3237.08 feet to a line formed by the existing southernmost projection of the 300 Area fence line extending east N89°10'00"E;

Thence West S89°10'00"W along said fence line approximately 3886.22 feet to the East right of way line of Stevens Drive, an unplatted road;

Thence South along said right of way line approximately 3444.97 feet to the line's intersection with the North right of way line of Horn Rapids Road, an unplatted road.

Thence northwesterly along the N. right-of-way line of Horn Rapids Road 28,600 feet more or less to the line's intersection with the N. right-of-way line of State Highway 240, in the N.E. ¼ of sec. 11, T.10N., R.27E.W.M.;

Thence northwesterly along said N. right-of-way line of the highway, 75 feet N. of and parallel with the centerline of said highway to a point in sec. 3, T.10N., R.27E.W.M., which point is on the eastward extension of the N. right-of-way line of a county road from Horn Rapids to Benton City;

Thence along the northerly and westerly right-of-way line of said road, 75 feet northerly and westerly of, and parallel with, the center line of said road to a point on the E. line of sec. 8, T.10N., R.27E.W.M.;

Thence N. to the E. quarter corner of said section;

Thence W. to the S.W. corner of the E. ½ of the N.E. ¼ of sec. 12, T.10N., R.26E.W.M.;

Thence N. to the N. line of said sec. 12;

Thence W. to the N.E. corner of the N.W. ¼ of the N.W. ¼ of the N.W. ¼ of sec. 11, T.10N., R.26E.W.M.;

Thence S. 660 feet;

Thence W. 660 feet to the E. line of sec. 10, T.10N., R.26E.W.M.;

Thence S. to the S.E. quarter corner of said sec. 10;

Thence W. along the E.-W. centerline of sec. 10 to the W. line of said section;

Thence N. along the W. section line to the S.E. corner of sec. 4, T.10N., R.26E.W.M.;

Thence W. along the S. line of sec. 4 and sec. 5 to the S.W. corner of the S.E. ¼ of the S.E. ¼ of sec. 5;

Thence N. to the S.E. corner of the N.W. ¼ of the S.E. ¼ of sec. 5;

Thence W. along the S. line of the N.W. ¼ of the S.E. ¼ to the S.W. corner of the N.W. ¼ of the S.E. ¼;

Thence N. to the S.E. corner of the N. ½ of the N.W. ¼;

Thence W. along the S. line of the N. ½ of the N.W. ¼ to the W. line of sec. 5;

Thence N. to the S.E. corner of sec. 31, T.11N., R.26E.W.M.;

Thence W. along the S. line of the E. ½ of the S.E. ¼ of sec. 31 to the E. line of said E. ½ of the S.E. ¼ of sec. 31;

Thence N. along the W. line of the E. ½ of the S.E. ¼ to the S.E. corner of the S.W. ¼ of the N.E. ¼ of sec. 31;

Thence W. along the S. line of the S.W. ¼ of the N.E. ¼ to the S.W. corner of the S.W. ¼ of the N.E. ¼;

Thence N. along the W. line of the S.W. ¼ of the N.E. ¼ to the S.E. corner of the N. ½ of the N.W. ¼ of said sec. 31;

Thence W. along the S. line of the N. ½ of the N.W. ¼ to the W. line of said sec. 31;

Thence N. along the W. line of sec. 31 to the S.E. corner of sec. 25, T.11N., R.25E.W.M.;

Thence W. along the S. line of sec. 25 to the S.W. corner of the S.E. ¼ of the S.E. ¼ of said sec. 25;

Thence N. along the W. line of the S.E. ¼ of the S.E. ¼ to the S.E. corner of the N.W. ¼ of the S.E. ¼;

Thence W. along the S. line of the N.W. ¼ of the S.E. ¼ to the S.W. corner of the N.W. ¼ of the S.E. ¼;

Thence N. along the W. line of the N.W. ¼ of the S.E. ¼ to the S.E. corner of the N.W. ¼ of sec. 25;

Thence W. along the S. line of the N.W. ¼ of sec. 25 to the W. line of sec 25;

Thence N. along the W. line of sec. 25 and the W. line of sec. 24 to the N. line of the S. ½ of the S. ½ of sec. 23;

Thence W. along the N. line of the S. ½ of the S. ½ of sec. 23 and the N. line of the S. ½ of the S. ½ of sec. 22 and the N. line of the S. ½ of the S. ½ of sec. 21 to the E. line of sec. 20;

Thence S. to the S.E. corner of sec. 20;

Thence W. along the S. line of sec. 20 and the S. line of sec. 19 to the S.E. corner of the S.W. ¼ of the S.W. ¼ of sec. 19;

Thence N. to the N.E. corner of the S.W. ¼ of the S.W. ¼ of sec. 19;

Thence W. to the W. line of sec. 19, all being in T.11N., R.25E.W.M.;

Thence continuing W. to the S.W. corner of the N.E. ¼ of the S.E. ¼ of sec. 24, T.11N., R.24E.W.M.;

Thence N. to the N.W. corner of said N.E. ¼ of the S.E. ¼ of sec. 24;

Thence W. to the S.W. corner of the S.E. ¼ of the N.W. ¼ of sec. 24;

Thence N. to the N.W. corner of said S.E. ¼ of the N.W. ¼ of sec. 24;

Thence W. to the W. line of sec. 24;

Thence N. to the N.W. corner of sec. 24;

Thence W. to the S.E. quarter corner of sec. 14;

Thence N. to the N. quarter corner of sec. 14;

Thence W. along the N. line of sec. 14 to the N.W. corner of sec. 14;

Thence N. along the W. line of sec. 11 and sec. 2 to the N.W. corner of sec. 2, all being in T.11N., R.24E.W.M., and continuing N. along the W. lines of secs., 35, 26, 23, 14, 11, and 2, all being in T.12N., R.24E.W.M.;

Thence continuing N. along the W. lines of secs. 35 and 26 in T.13N., R.24E.W.M., to the N.W. corner of sec. 26;

Thence W. along the S. line of sec. 22 to the S.E. quarter corner of sec. 22;

Thence N. along the N.-S. centerline of sec. 22 to the N. quarter corner of sec. 22;

Thence W. along the S. line of sec. 15 to the S.W. corner of sec. 15;

Thence N. along the W. line of sec. 15 to the S.W. corner of the N. ½ of the N.W. ¼ of sec. 15;

Thence E. along the S. line of the N. ½ of the N.W. ½ of sec. 15 to the S.W. corner of the S.W. ¼ of the N.E. ¼ of sec. 15;

Thence N. along the W. line of the S.W. ¼ of the N.E. ¼ of sec. 15 and continuing N. along the centerline of sec. 10 to the N. line of sec. 10;

Thence E. along the N. line of sec. 10 to the N.E. corner of sec. 10;

Thence N. along the W. line of sec. 2 to the N.W. corner of sec. 2;

Thence E. along the N. line of sec. 2 to the N.E. corner of sec. 2 all being in T.13N., R.24E.W.M.;

Thence N. along the W. line of sec. 36, T.14N., R.24E.W.M.to the N.W. corner of sec. 36;

Thence E. to the S. quarter corner of sec. 25;

Thence N. to the center of sec. 25;

Thence E. to the E. quarter corner of sec. 25 all being in T.14N., R.24E.W.M.;

Thence N. to the N.W. corner of sec. 30, T.14N., R.25E.W.M.;

Thence E. to the N. quarter corner of sec. 30;

Thence N. to the center of sec. 19;

Thence E. to the E. quarter corner of sec. 19;

Thence N. to the N.W. corner of sec. 20;

Thence E. to the N. quarter corner of sec. 20;

Thence N. to the center of sec. 17;
Thence E. to the E. quarter corner of sec. 17 and continuing E. to the center of sec. 16;
Thence N. to the N. quarter corner of sec. 16;
Thence E. to the N.E. corner of sec. 16 and continuing E. to the N. quarter corner of sec. 15;
Thence N. to the center of section 10;
Thence E. to the E. quarter corner of sec. 10;
Thence N. to the N.W. corner of sec. 11;
Thence E. to the N. quarter corner of sec. 11;
Thence N. to the center of sec. 2;
Thence E. to the E. quarter corner of sec. 2;
Thence N. to the N.W. corner of sec. 1;
Thence E. to the N. quarter corner of sec. 1, all being in T.14N., R.25E.W.M.;
Thence N. to the center of sec. 36;
Thence E. to the E. quarter corner of sec. 36, all being in T.15N., R.25E.W.M.;
Thence N. to the N.W. corner of sec. 31, T.15N., R.26E.W.M.;
Thence E. to the N. quarter corner of sec. 31;
Thence N. to the center of sec. 30;
Thence E. to the E. quarter corner of sec. 30 and continuing E. to the center of sec. 29;
Thence N. to the N. quarter corner of sec. 29;
Thence E. to the N.E. corner of sec. 29;
Thence N. to the W. quarter corner of sec. 21;
Thence E. to the center of sec. 21;
Thence N. to the N. quarter corner of sec. 21;
Thence E. to the N.E. corner of sec. 21;
Thence N. to the W. quarter corner of sec. 15;
Thence E. to the E. quarter corner of sec. 15;
Thence N. to the N.W. corner of sec. 14;
Thence E. to the N.E. corner of sec. 14 and continuing E. to the N.E. corner of sec. 13, all being in T.15N., R.26E.W.M.;
Thence continuing E. along the N. lines of secs. 18, 17, and 16 of T.15N., R.27E.W.M. to the N.E. corner of sec. 16;
Thence S. to the W. quarter corner of sec. 15;
Thence E. to the E. quarter corner of sec. 15;
Thence S. to the S.E. corner of sec. 15;
Thence E. to the N. quarter corner of sec. 23;
Thence S. to the center of sec. 23;
Thence E. to the E. quarter corner of sec. 23;
Thence S. to the S.E. corner of sec. 23;
Thence E. to the N. quarter corner of sec. 25;
Thence S. to the center of sec. 25;
Thence E. to the E. quarter corner of sec. 25;
Thence S. to the S.E. corner of sec. 25, all being in T.15N., R.27E.W.M.;
Thence E. to the N. quarter corner of sec. 31, T.15N., R.28E.W.M.;
Thence S. to the S. quarter corner of sec. 31, all being in T.15N., R.28E.W.M.;
Thence continuing S. to the center of sec. 6, T.14N., R.28E.W.M.;
Thence E. to the E. quarter corner of sec. 6;
Thence S. to the S.E. corner of sec. 6 and continuing S. along the E. lines of secs. 7 and 18 to the S.E. corner of sec. 18;
Thence E. to the N. quarter corner of sec. 20;
Thence S. to the S. quarter corner of sec. 20 and continuing S. to the S. quarter corner of sec. 29;
Thence E. to the S.E. corner of sec. 29;
Thence S. to the S.E. corner of sec. 32, all being in T.14N., R.28E.W.M.;

Thence continuing S. along the E. lines of secs. 5, 8, 17, 20, and 29 to the S.E. corner of sec. 29;

Thence E. to the N.E. corner of sec. 33 and continuing to the E. line of the W. ½ of the W. ½ of sec. 34;

Thence S. along the E. line of the W. ½ of the W. ½ of sec. 34 to the N. line of the S. ½ of the S.W. quarter of said sec. 34;

Thence E. to the N.E. corner of the S. ½ of the S.W. ¼ of sec. 34;

Thence S. to the S. quarter corner of sec. 34, all being in T.13N., R.28E.W.M.;

Thence E. along the N. line of sec. 3, T.12N., R.28E.W.M. to the N.E. corner of sec. 3;

Thence S. along the E. lines of secs. 3 and 10 to the W. quarter corner of sec. 11;

Thence E. to the E. line of the W. ½ of the W. ½ of sec. 11;

Thence S. along the E. line of the W. ½ of the W. ½ of sec. 11 to the S. line of sec. 11;

Thence E. to the S. quarter corner of sec. 11;

Thence S. to the S. line of the N. ½ of the N. ½ of sec. 14;

Thence E. along the S. line of the N. ½ of the N. ½ of sec. 14 to the W. line of the E. ½ of the N.E. ¼ of sec. 14;

Thence S. along the W. line of the E. ½ of the N.E. ¼ of sec. 14 to the E.-W. centerline of sec. 14;

Thence E. to the E. quarter corner of sec. 14;

Thence S. to the S.E. corner of sec. 14;

Thence continuing S. to the S. line of Tract 4 of Ringold Tracts according to the plat filed in the records of Franklin County, WA;

Thence W. to the W. line of navigation of the Columbia River;

Thence southerly along the said W. line of navigation to the point of beginning.

EXCEPTING from the above-described land, Section 1, Township 11N., Range 26 East Willamette Meridian in the ownership under quitclaim deed, of the STATE OF WASHINGTON.

EXCEPTING from the above-described land, a parcel under quitclaim deed, to the National Utility Training and Education Center being a portion of the Northwest quarter of Section 16, Township 10 North, Range 28 East, W.M., Benton county, Washington and more particularly described as the follows:

Beginning at the Northwest corner of said section 16, Thence N89°32'46"E along the North line of said Section 16 a distance of 481.36 feet, Thence S00°00'09"W a distance of 4.87 feet to the true point of beginning; Thence N89°59'11"E a distance of 1412.12 feet; Thence S00°00'18"E a distance of 2569.49 feet to the North right of way line of Horn Rapids Road as recorded in Auditors File Number 621762, Records of Benton County; Thence commencing along said right of way of Horn Rapids Road S89°43'56"W a distance of 656.59 feet to a point of curve; Thence continuing along said North line along a curve to the right having a central angle of 17°26'30", a radius of 1084.57 feet, an arc distance of 330.16 feet; Thence continuing along said North line N72°49'34"W, a distance of 188.97 feet; Thence N00°00'09"E a distance of 852.06 feet; Thence N89°59'51"W a distance of 250.00 feet; Thence N00°00'09"E a distance of 1616.01 to the True Point of Beginning and containing 77.46 acres, more or less.

Hanford Facility Permit Operating Boundary

In response to requirement WAC 173-303-806(xviii)(G) the following describes the legal boundary of the Hanford Site. Individual TSD units use only a very small portion of the Hanford Site. Additional descriptive information on the individual TSD units is contained in the Unit-Specific Portion of this permit application:

The Hanford Site being a tract of land located in Benton County, WA, the aforesaid tract being more particularly described as follows:

Commencing at the point of intersection of the E.-W. centerline of sec. 14, T.10N., R.28E. Willamette Meridian, with the western navigation line of the Columbia River;

Thence northerly 200 feet along said line of navigation to the TRUE POINT OF BEGINNING;

Thence North approximately 3237.08 feet to a line formed by the existing southernmost projection of the 300 Area fence line extending east N89°10'00"E;

Thence West S89°10'00"W along said fence line approximately 3886.22 feet to the East right of way line of Stevens Drive, an unplatted road;

Thence South along said right of way line approximately 3444.97 feet to the line's intersection with the North right of way line of Horn Rapids Road, an unplatted road.

Thence northwesterly along the N. right-of-way line of Horn Rapids Road 28,600 feet more or less to the line's intersection with the N. right-of-way line of State Highway 240, in the N.E. 1/4 of sec. 11, T.10N., R.27E.W.M.;

Thence northwesterly along said N. right-of-way line of the highway, 75 feet N. of and parallel with the centerline of said highway to a point in sec. 3, T.10N., R.27E.W.M., which point is on the eastward extension of the N. right-of-way line of a county road from Horn Rapids to Benton City;

Thence along the northerly and westerly right-of-way line of said road, 75 feet northerly and westerly of, and parallel with, the center line of said road to a point on the E. line of sec. 8, T.10N., R.27E.W.M.;

Thence N. to the E. quarter corner of said section;

Thence W. to the S.W. corner of the E. 1/2 of the N.E. 1/4 of sec. 12, T.10N., R.26E.W.M.;

Thence N. to the N. line of said sec. 12;

Thence W. to the N.E. corner of the N.W. 1/4 of the N.W. 1/4 of the N.W. 1/4 of sec. 11, T.10N., R.26E.W.M.;

Thence S. 660 feet;

Thence W. 660 feet to the E. line of sec. 10, T.10N., R.26E.W.M.;

Thence S. to the S.E. quarter corner of said sec. 10;

Thence W. along the E.-W. centerline of sec. 10 to the W. line of said section;

Thence N. along the W. section line to the S.E. corner of sec. 4, T.10N., R.26E.W.M.;

Thence W. along the S. line of sec. 4 and sec. 5 to the S.W. corner of the S.E. 1/4 of the S.E. 1/4 of sec. 5;

Thence N. to the S.E. corner of the N.W. 1/4 of the S.E. 1/4 of sec. 5;

Thence W. along the S. line of the N.W. 1/4 of the S.E. 1/4 to the S.W. corner of the N.W. 1/4 of the S.E. 1/4;

Thence N. to the S.E. corner of the N. 1/2 of the N.W. 1/4;

Thence W. along the S. line of the N. 1/2 of the N.W. 1/4 to the W. line of sec. 5;

Thence N. to the S.E. corner of sec. 31, T.11N., R.26E.W.M.;

Thence W. along the S. line of the E. 1/2 of the S.E. 1/4 of sec. 31 to the E. line of said E. 1/2 of the S.E. 1/4 of sec. 31;

Thence N. along the W. line of the E. 1/2 of the S.E. 1/4 to the S.E. corner of the S.W. 1/4 of the N.E. 1/4 of sec. 31;

Thence W. along the S. line of the S.W. 1/4 of the N.E. 1/4 to the S.W. corner of the S.W. 1/4 of the N.E. 1/4;

Thence N. along the W. line of the S.W. 1/4 of the N.E. 1/4 to the S.E. corner of the N. 1/2 of the N.W. 1/4 of said sec. 31;

Thence W. along the S. line of the N. 1/2 of the N.W. 1/4 to the W. line of said sec. 31;

Thence N. along the W. line of sec. 31 to the S.E. corner of sec. 25, T.11N., R.25E.W.M.;

Thence W. along the S. line of sec. 25 to the S.W. corner of the S.E. 1/4 of the S.E. 1/4 of said sec. 25;

Thence N. along the W. line of the S.E. 1/4 of the S.E. 1/4 to the S.E. corner of the N.W. 1/4 of the S.E. 1/4;

Thence W. along the S. line of the N.W. 1/4 of the S.E. 1/4 to the S.W. corner of the N.W. 1/4 of the S.E. 1/4;

Thence N. along the W. line of the N.W. 1/4 of the S.E. 1/4 to the S.E. corner of the N.W. 1/4 of sec. 25;

Thence W. along the S. line of the N.W. 1/4 of sec. 25 to the W. line of sec 25;

Thence N. along the W. line of sec. 25 and the W. line of sec. 24 to the N. line of the S. 1/2 of the S. 1/2 of sec. 23;

Thence W. along the N. line of the S. 1/2 of the S. 1/2 of sec. 23 and the N. line of the S. 1/2 of the S. 1/2 of sec. 22 and the N. line of the S. 1/2 of the S. 1/2 of sec. 21 to the E. line of sec. 20;

Thence S. to the S.E. corner of sec. 20;

Thence W. along the S. line of sec. 20 and the S. line of sec. 19 to the S.E. corner of the S.W. 1/4 of the S.W. 1/4 of sec. 19;

Thence N. to the N.E. corner of the S.W. 1/4 of the S.W. 1/4 of sec. 19;

Thence W. to the W. line of sec. 19, all being in T.11N., R.25E.W.M.;

Thence continuing W. to the S.W. corner of the N.E. 1/4 of the S.E. 1/4 of sec. 24, T.11N., R.24E.W.M.;

Thence N. to the N.W. corner of said N.E. 1/4 of the S.E. 1/4 of sec. 24;

Thence W. to the S.W. corner of the S.E. 1/4 of the N.W. 1/4 of sec. 24;

Thence N. to the N.W. corner of said S.E. 1/4 of the N.W. 1/4 of sec. 24;

Thence W. to the W. line of sec. 24;

Thence N. to the N.W. corner of sec. 24;

Thence W. to the S.E. quarter corner of sec. 14;

Thence N. to the N.W. quarter corner of sec. 14;

Thence W. along the N. line of sec. 14 to the N.W. corner of sec. 14;

Thence N. along the W. line of sec. 11 and sec. 2 to the N.W. corner of sec. 2, all being in T.11N., R.24E.W.M., and continuing N. along the W. lines of secs., 35, 26, 23, 14, 11, and 2, all being in T.12N., R.24E.W.M.;

Thence continuing N. along the W. lines of secs. 35 and 26 in T.13N., R.24E.W.M., to the N.W. corner of sec. 26;

Thence W. along the S. line of sec. 22 to the S.E. quarter corner of sec. 22;

Thence N. along the N.-S. centerline of sec. 22 to the N.E. quarter corner of sec. 22;

Thence W. along the S. line of sec. 15 to the S.W. corner of sec. 15;

Thence N. along the W. line of sec. 15 to the S.W. corner of the N. 1/2 of the N.W. 1/4 of sec. 15;

Thence E. along the S. line of the N. 1/2 of the N.W. 1/4 of sec. 15 to the S.W. corner of the N.W. 1/4 of the N.E. 1/4 of sec. 15;

Thence N. along the W. line of the S.W. 1/4 of the N.E. 1/4 of sec. 15 and continuing N. along the centerline of sec. 10 to the W. navigation line of the Columbia River, following said navigation line easterly, northerly, and southerly to a point directly W. of the S. line of Tract 4 of Ringold Tracts according to the plat filed in the records of Franklin County.

Thence southerly along the said W. line of navigation to the TRUE POINT OF BEGINNING.

EXCEPTING FROM THE ABOVE-DESCRIBED LAND THE FOLLOWING PARCELS, EXCLUDING that portion of the Hanford Railroad and any Hanford Site access roads, which may traverse these parcels:

PARCEL A) The N. 1/2 of the N.W. 1/4, and that portion of the N.W. 1/4 of the N.E. 1/4 in sec. 14, T.13N., R.24E.W.M. in the ownership and jurisdiction of the BONNEVILLE POWER ADMINISTRATION.

PARCEL B) Sec. 1, T.11N., R.26E.W.M. in the ownership under quitclaim deed, of the STATE OF WASHINGTON.

PARCEL C) A tract of land leased to the STATE OF WASHINGTON and subleased to U.S. Ecology lying in section 9, T.12N., R.26E.W.M., containing 100 acres more or less, more particularly described as follows: BEGINNING at the Southwest corner of said Section 9; thence North 0E 53' 09" West along the East line of Section 9 a distance of 2,942 feet, thence South 88E 50' 56" West 1,480 feet, thence South88E 53' 09" East 2,942 feet to the South line of the Section; thence North 88E 50' 56" East along said South line of the Section 1,480 feet to the point of beginning.

Three tracts of land leased to the WASHINGTON PUBLIC POWER SUPPLY SYSTEM more particularly described as follows:

PARCEL D) a tract of land (for the Hanford Generating Plant), commencing at the S.E. corner of sec. 28, T.14N., R.26E.W.M., said point having Washington State Coordinates, South Zone, of N. 486,994.01, and E. 2,236,672.11; thence N. 72E 02' 15" W. 3,483.15 feet, thence N. 67E 11' 41" W. 1,810 feet more or less to a point on the line of ordinary high water on the right bank of the Columbia River, which point is the TRUE POINT OF BEGINNING: thence S. 67E 11' 41" E. 1,810 feet more or less to a point, having Washington State Coordinates, South Zone, of N. 488,068.19 and E. 2,233,358.73, thence N. 22E 48' 19" E. a distance of 1,595 feet to a point, having Washington State Coordinates, South Zone, of N. 489,538.48 and E. 2,233,976.96, thence N. 67E 11' 41" W. 1,108 feet more or less to a point on the line of ordinary high water on the right bank of the Columbia River, thence southwesterly along the said line of ordinary high water to the TRUE POINT OF BEGINNING, containing 53.42 acres more or less; THIS PARCEL AMENDED BY DELETING THE FOLLOWING: Beginning at the S.E. corner of the leased parcel, which point is at coordinates N. 488,068.19 and E. 2,233,358.73 on the Washington State Coordinate, South Zone; thence N. 22E 48' 19" E. 1,060 feet; thence N. 67E 11' 41" W. 200 feet; thence S. 22E 48' 19" W. 1,060 feet; thence S. 67E 11' 41" E. 200 feet to the point of beginning; containing 4.85 acres, more or less;

PARCEL E) a tract of land (for WNP Site 2), beginning at the S.W. corner of sec. 11, T.11N., R.28E.W.M., said corner having Washington State coordinates, South Zone, of N. 408,335.30 and E. 2,307,653.50, thence N. 0E 41' 08" E. 8,065.28 feet to the TRUE POINT OF BEGINNING; thence W. 11,153.57 feet; thence S. 01E 01' 23" E. 3,000.48 feet; thence S. 88E 53' 54" W. 5,200.96 feet; thence N. 0E 31' 41" W. 3,690.15 feet; thence E. 1,430.00 feet; thence N. 1,865.69 feet; thence N. 87E 46' 08" E. 3,703.83 feet; thence S. 01E 01' 23" E. 1,600.25 feet; thence E. 11,189.29 feet; thence N. 01E 01' 23" E. 1,800.29 feet; thence N. 89E 07' 55" E. 3,300.38 feet to the line of Navigation of the W. bank of the Columbia River, thence southerly along said line of Navigation to a point that bears N. 89E 15' 21" E. from the TRUE POINT OF BEGINNING; thence S. 89E 15' 21" W. 3,850.32 feet more or less to the TRUE POINT OF BEGINNING.

PARCEL F) A tract of land (for WNP Sites 1 and 4) lying in Section 4 of Township 11 North, Range 28 East, Willamette Meridian, described as follows:

Beginning at the Southwest corner of Section 11, Township 11 North, Range 28 East, W.M., (said corner being located by reference to the Washington State Coordinate System South Zone at coordinates North 408,335.30 and East 2,307,653.50) thence North 65E-17'-03" West 12113.14 feet to the TRUE POINT OF BEGINNING (said point being located by reference to the Washington State Coordinate System South Zone at coordinates North 413,400.00 and East 2,296,650.00); thence North 01E-01'-23" West 3000.48 feet to a point; thence East 5280.00 feet to a point; thence South 01E-01'-23" East 3000.48 feet to a point; thence West 5280.00 feet more or less to the TRUE POINT OF BEGINNING, containing 363.69 acres more or less; and

A parcel of land lying in Sections 3 and 4 of Township 11 North, Range 28 East, and Sections 33 and 34 of Township 12 North, Range 28 East, Willamette Meridian, described as follows:

Beginning at the Southwest corner of Section 11, Township 11 North, Range 28 East, W.M., (said corner being located by reference to the Washington State Coordinate System South Zone at coordinates North 408,335.30 and East 2,307,653.50) thence North 50E-42'-00" West 14,311.63 feet to the TRUE POINT OF BEGINNING (said point being located by reference to the Washington State Coordinate System South Zone at coordinates North 417,400.00 and East 2,296,578.57); thence North 01E-01'-23" West 3000.48 feet to a point; thence East 5,280.00 feet to a point; thence South 01E-01'-23" East 1200.19 feet to a point; thence East 5,973.57 feet to a point; thence South 1E-01'-23" West 1800.29 feet to a point; thence West 11,189.29 feet more or less to the TRUE POINT OF BEGINNING, containing 609.15 acres more or less.

PARCEL G) A parcel of Hanford Site land transferred out of federal ownership to the National Utility Training and Education Center being a portion of the Northwest quarter of Section 16, Township 10 North, Range 28 East, W.M., Benton county, Washington and more particularly described as the follows:

Beginning at the Northwest corner of said section 16, Thence N89°32'46"E along the North line of said Section 16 a distance of 481.36 feet, Thence S00°00'09"W a distance of 4.87 feet to the true point of beginning; Thence N89°59'11"E a distance of 1412.12 feet; Thence S00°00'18"E a distance of 2569.49 feet to the North right of way line of Horn Rapids Road as recorded in Auditors File Number 621762, Records of Benton County; Thence commencing along said right of way of Horn Rapids Road S89°43'56"W a distance of 656.59 feet to a point of curve; Thence continuing along said North line along a curve to the right having a central angle of 17°26'30", a radius of 1084.57 feet, an arc distance of 330.16 feet; Thence continuing along said North line N72°49'34"W, a distance of 188.97 feet; Thence N00°00'09"E a distance of 852.06 feet; Thence N89°59'51"W a distance of 250.00 feet; Thence N00°00'09"E a distance of 1616.01 to the True Point of Beginning and containing 77.46 acres, more or less.

PARCEL H) The parcels on the Hanford Site used but not owned by the Bonneville Power Administration including the Ashe Substation, the Hanford Substation, the Benton Switch Substation, and the White Bluffs Substation.

ASHE SUBSTATION. A parcel of land in the W. 1/2 S.E. 1/4, the S.E. 1/2 N.W. 1/4 and the S.W. 1/4 of Section 32, Township 12 North, Range 28 East, Willamette Meridian, Benton County, Washington, more particularly described as follows:

Commencing at a Bonneville Power Administration monument set at the intersection of the north-south and east-west base lines for the Ashe Substation Site in the S.E. 1/4 S.W. 1/4 of Section 32, Township 12 North, Range 28 East, Willamette Meridian. This monument is located N.26E49'15"E., 1503.1 feet from a 2-inch brass disc on the south line of Section 32, said disc being set by WPPSS survey of August 11, 1971. Thence N.52E10'10"E., 1200.0 feet to the true point of beginning. Thence S.37E49'50"E., 400.0 feet; thence S.52E10'10"W., 1100.0 feet; thence S.37E49'50"E., 1287.7 feet to a point on the south line of Section 32; thence S.87E46'12"W., along said south line of Section 32, a distance of 984.0 feet; thence N.37E49'50"W., 2014.8 feet; thence N.52E10'10"E., 1900.0 feet; thence S.37E49"50"E., 900.0 feet to the true point of beginning; containing 75.09 acres, more or less.

ASHE SS SOUTH CORRIDOR, PARCEL 1. A portion of Government Lot 3 of Section 5, Township 11 North, Range 28 East, Willamette Meridian, Benton County, Washington, more particularly described as follows:

Commencing at a point in Bay 3 in the Ashe Substation Site in the N.E. 1/4 S.W. 1/4 of Section 32, Township 12 North, Range 28 East, Willamette Meridian, said point being N.25E56'16"E., 1716.1 feet from a 2-inch brass disc on the south line of Section 32, said disc being set by WPPSS survey of August 11, 1971. Thence S.31E24'10"E., 553.5 feet; thence S.1E50'00"E., 1029.6 feet to a point on the north line of Section 5, Township 11 North, Range 28 East, Willamette Meridian, the true point of beginning for this description. Thence N.87E46'12"E., along said north line of Section 5, a distance of 75 feet; thence S.1E50'00"E., 1299.7 feet; thence S.88E10'00"W., 281.5 feet; thence N.1E50'00"W., 1297.6 feet to a point on said north line; thence N.87E46'12"E., along said north line, a distance of 206.5 feet to the true point of beginning.

ASHE SS SOUTH CORRIDOR, PARCEL 2. All that portion of the S.E. 1/4 S.W. 1/4 of Section 32, Township 12 North, Range 28 East, Willamette Meridian, Benton County, Washington, that lies southerly and easterly of the Ashe Substation Site and westerly of a line 75 feet easterly from and parallel with the survey line for the Bonneville Power Administration WPPSS No. 2 Powerhouse-Ashe 500 kV line No. 2. The survey line is described, with reference to the Washington Coordinate System - South Zone, as follows:

Beginning at a point in Bay 3 in the Ashe Substation Site in the N.E. 1/4 S.W. 1/4 of Section 32, Township 12 North, Range 28 East, Willamette Meridian, at a survey Station 97+84.0, said point being N.25E56'16"E., 1716.1 feet from a 2-inch brass disc on the south line of Section 32, said disc being set by WPPSS survey of August 11, 1971. Thence S.31E24'10"E., 553.5 feet to station 92+30.5; thence S.1E50'00"E., 1029.6 feet to a point on the south line of Section 32, said point being N.87E46'12"E., 1072.1 feet from said brass disc.

ASHE-SS-AR-1. A portion of Lot 3 S.1/2 N.W. 1/4, and N.W. 1/4 S.W. 1/4 of Section 5, the E. 1/2 S.E. 1/4 and S.W. 1/4 S.E. 1/4 of Section 6, the N.W. 1/4 N.E. 1/4 and E. 1/2 N.W. 1/4 of Section 7, Township 11 North, Range 28 East, Willamette Meridian, Benton County. Washington.

HANFORD SUBSTATION SITE. Lot 1 of Block 8, Lots 13 and 14 of Block 9, and Lot 8 of Block 10 of Hanford, according to the recorded plat thereof, and that part of Thirteenth Street lying between the northeasterly line of Tract A of Hanford, according to the recorded plat thereof and the Columbia River, and that part of Dunham Street lying southeasterly of a line connecting the northwesterly lines of Lot 8 of Block 10 and Lot 13 of Block 9 of Hanford, according to the recorded plat thereof, all in Section 25, Township 13 North, Range 27 East, Willamette Meridian Benton County, Washington, containing 2.7 acres, more or less. Subject to easement to Pacific Power & Light Company for power line and access purposes.

BENTON SWITCH SUBSTATION. A parcel of land in the N.W. 1/4 of Section 11, Township 11 North, Range 28 East, Willamette Meridian, Benton County, Washington, described with reference to the Washington Coordinate System - South Zone, as follows:

Beginning at the northwest corner of said parcel, being S.54E50'E., 1804.0 feet more or less from the northwest corner of said Section 11; thence N.49E13'45"E., 550.0 feet to the northeast corner, evidenced by a brass cap; thence S.40E46'15"E., 500.0 feet to the southeast corner, evidenced by a brass cap; thence S.49E13'45"W., 550.0 feet to the southwest corner, evidenced by a brass cap; thence N.40E46'15"W., 500.0 feet to the point of beginning. The described parcel contains 6.31 acres, of which 2.75 acres lie within the boundaries of the existing Benton Switching Station.

WHITE BLUFFS SUBSTATION. A parcel of land in Government Lots 3 and 4 and the E. 1/2 S.W. 1/4 of Section 7, Township 10 North, Range 28 East, Willamette Meridian, Benton County, Washington, more particularly described as follows:

Commencing at a Bonneville Power Administration monument in said Government Lot 4 at the intersection of the east-west and north-south base lines for the White Bluffs Substation Site, said monument being N.36E45'35"E., 1623.7 feet from the southwest corner of Section 7. This corner is evidenced by a rock mound. Thence N.72E55'20"W., along the east-west base line, a distance of 500 feet to the true point of beginning. Thence N.17E04'40"E., 400 feet; thence S.72E55'20"E., 900 feet; thence S.17E04'40"W., 1060 feet, more or less, to a point 40 feet north of the centerline of Horn Rapids Road; thence N.72E55'20"W., 900 feet., thence N.17E04'40"E., 660 feet, more or less, to the true point of beginning, containing 21.90 acres, more or less.

For purposes of application of Part IV Corrective Action of the Hanford Facility Permit only, the Hanford Facility also includes PARCELS C, D, E, F, and G of the lands identified as Excepted from the ABOVE-DESCRIBED LAND, in the foregoing legal description.

Hanford Facility RCRA Permit Modification Notification Forms

Part III, Operating Unit 5

325 Hazardous Waste Treatment Units

Index

Page 2 of 3: OU-5 Permit Conditions
Page 3 of 3: Addendum J, Contingency Plan

Submitted by CosOperator: 20 SEP 2011

Eric G. Damberg Date

Reviewed by DOE Program Office:

Joe R. Franco Date

Hanford Facility RCRA Permit Modification Notification Form

Unit:	Permit Part
325 Hazardous Waste Treatment Units	**Part III, Operating Unit 5**

Description of Modification:
Part III, OU-5: Replace file dated March 31, 2010, with file dated September 30, 2011

Part III, OPERATING UNIT GROUP 5 PERMIT CONDITIONS

325 Hazardous Waste Treatment Units

Unit Description:

The 325 Hazardous Waste Treatment Units (325 HWTUs) store and treat dangerous and/or mixed waste in containers and in a 1,218-liter tank. The 325 HWTUs consist of the Shielded Analytical Laboratory (SAL) that includes Rooms 32, 200, 201, 202, and 203; and the Hazardous Waste Treatment Unit (HWTU) that includes Rooms 520, 524, and 528 of the 325 Building located in the south portion of the 300 Area.

List of Addenda Specific to Operating Unit Group 5

Addendum A Part A Form, dated September 30, 2008

Addendum B Waste Analysis Plan, dated September 30, 2009

Addendum C Process Information, dated June 30, 2009

Addendum D Groundwater Monitoring (Reserved)

Addendum E Procedures to Prevent Hazards, dated June 30, 2009

Addendum F Preparedness and Prevention, dated June 30, 2009

Addendum G Personnel Training, dated March 31, 2009

Addendum H Closure Plan, dated June 30, 2009

Addendum I Inspection Requirements, dated June 30, 2009

Addendum J Contingency Plan, dated June 17, 2011

Deleted: March 31, 2010

WAC 173-303-830 Modification Class	Class 1	Class 1	Class 2	Class 3
Please mark the Modification Class:	X			

Enter relevant WAC 173-303-830, Appendix I Modification citation number: A.1
Enter wording of WAC 173-303-830, Appendix I Modification citation:

Modification Approved/Concur ☑ Yes ☐ Denied (state reason below)
Reason for denial:

Reviewed by Ecology: 9/21/11
F.W. Bond Date

for F.W. Bond

Hanford Facility RCRA Permit Modification Notification Form

Unit:	Permit Part
325 Hazardous Waste Treatment Units	**Part III, Operating Unit 5**

Description of Modification:

Addendum J, Building Emergency Procedure

Replace Addendum J, Building Emergency Procedure dated March 31, 2010, with Addendum J, Building Emergency Procedure, dated June 17, 2011.

WAC 173-303-830 Modification Class	Class 1	Class 1	Class 2	Class 3
Please mark the Modification Class:	X			

Enter relevant WAC 173-303-830, Appendix I Modification citation number: B.6.d

Enter wording of WAC 173-303-830, Appendix I Modification citation:

B.6.d. Contingency plan Changes in name, address, or phone number of coordinators or other persons or agencies identified in the plan

Modification Approved/Concur ☑ Yes ☐ Denied (state reason below)

Reason for denial:

Reviewed by Ecology:

F.W. Bond 9/21/11

F.W. Bond Date

for: F.W. Bond

Hanford Facility RCRA Permit Modification
Part III, Operating Unit 5
325 Hazardous Waste Treatment Units

Remove and replace the following sections for Part III, Operating Unit 5:

- Part III, OU-11, Permit Conditions dated March 31, 2010 with Permit Conditions dated September 30, 2011
- Part III, OU-11, Addendum J, Building Emergency Procedure

F&O Building Emergency Procedure

BEP- 325/RPL

Building Emergency Procedure for Radiochemical Processing Laboratory (RPL)

Revision #	2011b
Revision Date	6/17/2011
Procedure Owner:	CA Kooiker
Author:	CA Kooiker
Approval:	RPL Manager, HF Kerschner
Concurrence:	Building Manager, CA Kooiker Emergency Preparedness, TL Bettendorf Waste Operations Manager, TL VanArsdale Worker Safety & Health, WE Crouse
Work Location:	RPL/300 Area
Identified Hazards:	N/A *See Section 4.0*
SES/USQ Reviewer:	TA Campbell
Applicable to RPL ONLY:	RPL-2008-087D
Use Category:	Reference Use

Approval History for: BEP-325/RPL_R2011, Building Emergency Procedure for RPL

Final Process State: APPROVED

Name	Activity Name	Date
✔ VanArsdale, Trevor L	Review Concurrence 3	4/20/2011 10:01:53 AM
✔ Bettendorf, Timm L	Review Concurrence 2	4/20/2011 10:06:41 AM
✔ Crouse, William E	Review Concurrence 4	4/20/2011 10:29:13 AM
✔ Kooiker, Curt	Review Concurrence 1	4/21/2011 8:10:23 AM
✔ Kerschner, Skip	Review Approval 1	4/21/2011 2:47:27 PM
✔ Campbell, Teresa A	Independent Review Chair Screener Approval	4/21/2011 3:06:53 PM

*** All actions are stored digitally and viewable at https://approvals.pnl.gov/ProcessView.aspx?pid=611159**

Contents

1.0 General Information 5
1.1 Facility Name 6
1.2 Facility Location 6
1.3 Owner/Operator 6
1.4 Facility Description 7
1.5 Hanford Site Emergency Sirens/Alarms 8
1.6 Coordination Activities with Local Emergency Responders 9
1.7 Deviations from Technical Safety Requirements 9
2.0 Purpose of the Building Emergency Procedure 10
2.1 Distribution 10
2.2 Acronyms 11
2.3 Making Changes to the BEP 12
3.0 Building Emergency Response Organization 13
3.1 Emergency Telephone Numbers [WAC-173-303-350(3)(d)] 13
3.2 Building Emergency Response Organization (BERO) 14
3.3 BERO – EOC Interface 15
3.4 Building Emergency Directors and Alternates 16
3.5 Incident Command Post (ICP) Communicator 17
3.6 Assisting Communicator 18
3.7 Incident Command Post (ICP) Recorder 18
3.8 Management Support Group (MSG) Lead 18
3.9 Management Support Group Liaison 18
3.10 Management Support Group Recorder 19
3.11 Staging Area Supervisor 19
3.12 Zone Wardens 19
3.13 Facility Operations Specialist (FOS) 20
3.14 Hazard Communicator 20
3.15 Hazards Assessors 20
3.16 Individual Staff Member Responsibilities 21
3.17 Facility Visitor Responsibilities 22
3.18 Supervisors/Manager Responsibilities 22
3.19 Unique Program Laboratory Expertise 22
3.20 Environment, Safety, and Health Advisor Responsibilities 22
3.21 Line Management 23
3.22 New Staff Assigned to RPL 23
4.0 Implementation of the BEP 24
5.0 Facility Hazards 25
5.1 Hazardous Materials 25
5.2 Physical (Industrial) Hazards 25
5.3 Dangerous Mixed Waste 25
5.4 Radioactive Materials 26
5.5 Criticality 26
6.0 Potential Emergency Conditions and Appropriate Response 27
6.1 Explosion/Fire/Fire Alarm 27
6.2 Hazardous Material/Dangerous or Mixed Waste Spill 29
6.3 Unusual, Irritating or Strong Odors 33

6.4 Potential Radiological Material Release ... 33
6.5 Criticality ... 34
6.6 Loss of Electrical Power/Reduced Ventilation ... 35
6.7 Natural Phenomena Events ... 36
6.8 Bomb Threats/Suspicious Objects ... 36
6.9 Hostage Situation/Armed Intruder ... 38
6.10 Declared Emergency in the 300 Area ... 39
7.0 Facility Take Cover - Shutdown of HVAC ... 40
8.0 Utility Disconnects ... 41
8.1 Electrical ... 41
8.2 Potable/Process Water ... 41
8.3 Gas Supplies ... 41
8.4 Steam ... 41
8.5 Air ... 41
8.6 Ventilation ... 41
8.7 Fire Protection Supply Water ... 42
8.8 Dry Pipe OS&Y (Riser #6) ... 42
8.9 RPL Ramp Sump Pump ... 42
9.0 Termination, Incident Recovery, and Restart ... 43
9.1 Termination ... 43
9.2 Recovery ... 43
9.3 Restart ... 44
10.0 Emergency Equipment ... 45
10.1 Portable Emergency Equipment ... 45
10.2 Fire Control Equipment ... 45
10.3 Communications Equipment/Warning Systems ... 45
10.4 Personal Protective Equipment (PPE) ... 46
10.5 Spill Control and Containment Supplies ... 46
11.0 Evacuation of Persons with a Disability, or Visitors ... 48
12.0 Emergency Action Levels ... 49
12.1 300 Area Protective Actions ... 49
12.2 RPL Emergency Action Levels ... 49
13.0 Attachments ... 50
Attachment 1 – Emergency Equipment & Evacuation Routes - 1st Floor ... 51
Attachment 2 – Emergency Equipment & Evacuation Routes - 2nd & 3rd Floors ... 52
Attachment 3 – Emergency Equipment & Evacuation Routes - Mezzanine & Basement ... 53
Attachment 4 – Zone Warden Areas – 1st Floor ... 54
Attachment 5 – Zone Warden Areas – 2nd & 3rd Floors ... 55
Attachment 6 – Zone Warden Areas – Mezzanine & Basement ... 56
Attachment 7 – RPL Staging Area Map ... 57
Attachment 8 – Location of RPL in the 300 Area ... 58
14.0 References and Source Requirements ... 59
14.1 Emergency Preparedness Checklists ... 59
Procedure Revision History ... 60

1.0 General Information

The Radiochemical Processing Laboratory (RPL)/325 Building Emergency Procedure (BEP) has been designed to provide information necessary to minimize risks to personnel, facilities, programs, and the environment in the event of an emergency. This procedure applies to all resident staff, visitors, vendors, and contractor/subcontractor personnel. If an event is of a security nature (bomb threat, hostage situation, or other act of violence), security procedures may supersede this procedure and will be assessed on a case-by-case basis.

This facility contains both radioactive and hazardous materials in operations, storage, and handling. The RPL facility poses a possible significant hazard to adjacent facilities, personnel, programs, and the environment.

This BEP includes the contingency plans and emergency procedures for hazardous waste management activities as referenced by the Washington Administrative Code (WAC) [173-303-340, -350, and -360]. This plan must be implemented whenever an emergency threatens human health and the environment.

Emergencies may arise from, but are not limited to the following:

- Fire
- Explosion
- Loss of service systems
- A medical emergency
- Bomb threats
- Criticality
- Criminal activity
- Incidents at other facilities
- Natural hazards or natural forces
- Spill/release to the environment requiring assistance
- Hazardous materials release.

Expected responses are those actions, which are intended to minimize the effects of a situation while providing optimum protection to personnel. Expected responses include notification to the PNNL Operations Center, Building Manager (BM), Building Emergency Response Organization (BERO), and personnel in the facility. This procedure also provides plans for notifying personnel to take safe actions such as “Take Cover,” “Evacuate,” or other planned actions dictated by the event. The procedure provides for formal notification and reporting.

Other emergency response agencies available to assist the Building Emergency Director (BED) and Incident Commander from offsite are described in DOE/RL 94-02, Section 3.0 [WAC 173-303-350 (3)(d)].

The BED will provide BERO members BEP training annually. The BED and Alternate BEDs will receive annual training from the PNNL Emergency Preparedness office.

The policy of PNNL is to provide for the safety of its staff, contractor/subcontractor personnel, visitors, and members of the public in case of an emergency incident. PNNL line management

has the responsibility to execute this policy and to see that all staff understand their responsibilities and know the action to be taken in an emergency. Every staff member is responsible for using the appropriate safety instructions and procedures and to remain alert to unsafe conditions or acts while performing his or her job. All personnel are responsible for responding to emergency conditions to minimize adverse impacts.

In the event of an emergency condition in the facility, members of the RPL BERO will perform their duties as described in this procedure. Specific emergency actions for response to events will be applicable as specified in this BEP. Those BERO members whose assistance is needed to mitigate a lesser event will be notified by telephone or personal contact by the BED or delegate. Occupants of the facility who are not members of the BERO shall follow the standard PNNL Emergency Preparedness requirements at https://hdi.pnl.gov/standard/83/8300t010.htm.

The building fire alarm is the primary means of notification for an event that requires full activation of the BERO. Emergency telephone numbers are listed in Section 4.0.

This procedure will be reviewed at least annually and amended if necessary or whenever any of the following occurs [WAC-173-303-350 (5)]:

- The applicable regulations or the Hazardous Waste Treatment (HWTU's) permit is revised.
- The procedure fails in an emergency.
- The facility changes in a manner that materially increases or decreases the potential for fire, explosions, or release of hazardous waste or hazardous waste constituents, or in any way that changes the response necessary in an emergency.
- The emergency coordinating personnel list changes.
- The emergency equipment list changes.

1.1 Facility Name

Name: Radiochemical Processing Laboratory (RPL), 325 Building

Address: Cypress St., 300 Area

Richland, WA 99352

EPA Generator Identification Number: **WA 7890008967**

1.2 Facility Location

The RPL Building is in the southern portion of the 300 Area, east of the 329 Building.

1.3 Owner/Operator

The RPL facility is owned/operated by DOE and co-operated by Pacific Northwest National Laboratory (PNNL). The RPL Manager is the senior line manager in the RPL and has overall responsibility for all aspects of operations in the RPL. The RPL Manager is part of the Nuclear Operations Division (NOD) within the Facilities & Operations (F&O) directorate. The RPL Building Manager reports directly to the RPL Manager and supports operations and maintenance in the facility. The RPL Building Manager is also the primary Building Emergency Director (BED).

1.4 Facility Description

The RPL, as referred to in this BEP, consists of the RPL Building, RPL Filter Building, and the East Storage Yard located east of the RPL Building.

The RPL Building houses laboratories and specialized facilities including general-purpose chemical laboratories, High-level Radiochemistry Facility (HLRF), Shielded Analytical Laboratory (SAL), fissionable material storage areas, and RPL Hazardous Waste Treatment Units (HWTUs). The general-purpose laboratories characterize fuel, single- and double-shell tank waste, environmental samples, fusion/tritium samples, and other wastes. The radiochemistry facility includes areas for glove boxes, hot cells, cask handling, storage, and isolation of isotopes for unique applications like medical use. Analytical laboratory operations are conducted on small amounts of highly radioactive materials such as samples of single-shell tank waste. The HWTU treats hazardous, mixed, low-level radioactive and transuranic waste.

The RPL Filter Building is located on the northwest corner of the main RPL structure and houses the final stage HEPA filters and the main exhaust fans.

The East Storage Yard is a fenced enclosure adjacent to the east side of the RPL Building and is designated as an outdoor Radioactive Material Area (RMA).

1.5 Hanford Site Emergency Sirens/Alarms

Note: Some signals may not be applicable to the building; however, they may be heard in other parts of the Hanford Site. In the event of "Take Cover" or "Evacuation" alarms, the BERO will respond to the RPL lunchroom/lobby area for BED direction.

SIGNAL	MEANING	ACTIONS
Slow Whoop followed by voice message	Fire	Vacate building; proceed to staging area.
Steady tone on whistle, klaxon horn, or siren	Area Evacuation	Vacate building; proceed to staging area Personnel in vehicles shall proceed to the nearest occupied facility and report to the staging area supervisor (SAS).
Wavering siren or short blasts on whistle, klaxon horn, or siren.	Take cover (Shelter)	Proceed to shelter or stay indoors. Close all exterior doors, turn off all intake ventilation (only if it can be done safely), and notify manager of whereabouts. Personnel in vehicles shall proceed to the nearest occupied facility and report to facility management. Staff should refrain from eating and drinking during a take cover event if physically able, until an appropriate evaluation of the event can be made.
AH-OO-GAH horn (howler) or flashing blue light (in high noise areas)	Nuclear criticality	Run at least 100 feet from building; proceed to staging area, along a path that does not take you closer to the building.
Variable color (red, amber) light with ringing bell or whistle	Airborne Radioactivity or Area Radiation Monitor	Stop work activities; immediately exit the area; notify Radiological Control personnel.
Communicator Notification System (CNS), telephone call displayed from 375-2121	Emergency Communications	Lift receiver, say "**HELLO**," listen to the message and follow the actions designated.
Telephone Notification System (TNS)	Emergency Communications	Lift receiver, say "**HELLO**," listen to the message and follow the actions designated. (Note: this system is only applicable to facilities on the Hanford site (i.e., 300/600 Areas)

1.6 Coordination Activities with Local Emergency Responders

Interfaces and coordination with offsite agencies are in the planning, preparedness, response, and recovery elements of the Hanford Emergency Management Program. DOE has developed and maintains agreements to formalize areas of understanding, cooperation, and support with offsite agencies. These agreements are applicable to all Hanford facilities, including the RPL. Summaries of these memoranda of agreement (MOA) are given in Table 3-1 of the *Hanford Emergency Management Plan* (DOE/RL 94-02).

1.7 Deviations from Technical Safety Requirements

Emergency actions that depart from an approved TSR may be taken when no actions consistent with the TSRs are immediately apparent, and when these actions are needed to protect workers, the public, or the environment from imminent and significant harm.

Such actions shall be approved, as a minimum, by the RPL Building Manager, the RPL Manager, or the RPL Building Emergency Director. If emergency actions are taken, verbal notifications shall be made to the DOE-RL within two hours and by written reports to DOE Headquarters within 24 hours. [TSR AC 5.11]

2.0 Purpose of the Building Emergency Procedure

This procedure describes the processes and information necessary in the event of an emergency for the RPL BERO members to react to the emergency and to perform the following actions:

- Maximize safety, minimize risk to life, and provide prompt efficient treatment for injured persons.
- Provide all members of the BERO with an understanding of their roles and responsibilities in the event of an emergency.
- Minimize the effects on the health and safety of personnel, property, the environment, programs, and the public.
- Provide prompt internal and external notifications to the responsible authorities.

2.1 Distribution

At a minimum, controlled document copies of this BEP will be located at the following locations:

- BED emergency response bag
- RPL Power Operator Office (Room 900)
- Building Manager's file
- EP Program Office
- PNNL Operations Center
- Hanford Emergency Operations Center (Hanford Site facilities only)
- Management Support Group emergency response bag (LSB/2D55)
- Alternate Incident Command Post (350 Building room 161)

The RPL BEP may be viewed and/or printed at https://facilities.pnl.gov/weblinks/BEP/325/BEP-325.pdf. Copies of the BEP that are printed from this website are considered uncontrolled copies.

2.2 Acronyms

BED	Building Emergency Director
BEP	Building Emergency Procedure
BERO	Building Emergency Response Organization
BM	Building Manager
CAM	Continuous Air Monitor
CAS	Criticality Alarm System
CMS	Chemical Management System
CNS	Communicator Notification System
CSM	Cognizant Space Manager
DOE	Department of Energy
EAL	Emergency Action Level
EIP	Emergency Information Posting
EOC	Emergency Operations Center
EMSD	Environmental Management Services Department
EPA	Environmental Protection Agency
ESM	Electronic Storage Media
FOS	Facility Operations Specialist
FSR	Field Services Representative
HDI	How Do I
HFD	Hanford Fire Department
HLRF	High-Level Radiochemistry Facility
HWTU	Hazardous Waste Treatment Unit
IC	Incident Commander
ICP	Incident Command Post
IOPS	Integrated Operations System
LA/LAI	Limited Area Island
MIT	Map Information Tool
MSDS	Materials Safety Data Sheet
MSG	Management Support Group
ONC	Occurrence Notification Center
PIV	Post Indicator Valve
PNNL	Pacific Northwest National Laboratory

POC	Patrol Operations Center
PPE	Personnel Protective Equipment
RBA	Radiological Buffer Area
RCRA	Resource Conservation and Recovery Act
RPT	Radiological Protection Technologist
RPL	Radiochemical Processing Laboratory
SAL	Shielded Analytical Laboratory
SAS	Staging Area Supervisor
SME	Subject Matter Expert
TDP	Testing Designated Position
TNS	Telephone Notification System
TSD	Treatment, Storage, Disposal
WAC	Washington Administrative Code

2.3 Making Changes to the BEP

PNNL-MA-110, *Emergency Management Plan* requires the BED to keep the Emergency Preparedness Office (EPO) advised of all changes in the BERO. This may be accomplished by memo to the EPO. The Hazardous Waste Treatment Unit (HWTU) Permit Coordinator and the RCRA Subject Matter Expert are also required to be notified before any changes are made to the BEP.

To request revisions to this procedure, refer to ADM-001, *Document Production & Distribution*.

3.0 Building Emergency Response Organization

3.1 Emergency Telephone Numbers [WAC-173-303-350(3)(d)]

In the event of an emergency, specific detailed facility information may be needed. Knowledge of the building, utilities, and radiation hazards can be obtained from the staff listed in Table 14.a. Contact the PNNL Operations Center at 375-2400 if unable to contact these staff members using the numbers provided.

Any Emergency – PNNL Single Point Contact: 375-2400			
Note: With the appropriate approval, BED home addresses can be obtained at the PNNL Operations Center.			
***Building Emergency Director (BED)** Curtis A. Kooiker	**Office:** 375-5352	**Home:** 628-9816	**Cell:** 528-8033
***BED1** Daniel G. Wandler	**Office:** 375-5179	**Home:** 967-3493	**Cell**: 438-1053
***BED2** (HF) Skip Kerschner	**Office:** 375-5345	**Home:** 396-0593	**Cell:** 554-4369
***BED 3** Eric M Hanson	**Office:** 375-5351	**Home:** 713-0860	**Cell:** 713-0860
Additional F&O Management Contacts: Utility Operations WTL, Robert McKinney Nuclear Operations WTL, Ed Arel Fire Protection Engineer: Dan Kester Safety & Health Rep: Mike Zabel F&O Mgt Support Group: Reed Sharp	 Office: 375-7561 Office: 375-5398 Office: 371-7383 Office: 375-5013 Office: 371-7042	 Pager: 85-9673	 Cell: 539-4007 Cell: 521-6072 Cell: 308-9108 Cell: 378-4278
EOC RPL Tech Reps: Gertrude Patello Randy Thornhill Franciska Steen	Office: 375-5330 Office: 375-5220 Office: 375-5546		 Cell: 851-6769
Unique Program Laboratory Expertise Waste Mgt – 90-Day: Zane Turner Low Level TSDs: Trevor VanArsdale Environmental Compliance Rep: John Holland	 Office: 375-5088 Office: 375-3814 Office: 375-5002		 Cell: 554-4359
Alternate Incident Command Post: 350 Bldg./Room 161	Office: 376-7565 Fax: 376-7965		
Environmental Support Contact *(regulatory notifications only)*	375-2400 375-1648		
Richland Fire Department	375-2400		
Medical and First Aid	375-2400		
Hazardous Materials Response Team (Benton Franklin County Hazardous Material Response Team	375-2400		
Ambulance Services	375-2400		
Police Department	375-2400		
PNNL Duty Officer(s) & PNNL Info Line	375-2154		
Off Normal Event Reporting	375-2400		

** These are Testing Designated Positions (TDP) per HDI subject area Workplace Substance Abuse. Any changes to these positions require coordination through the Testing-Designated Position (TDP) Administrator.*

Note: Doctors and/or nurses are available for emergency assistance during normal business hours at CSC Hanford Occupational Health Services (CSC HOHS) Also, CSC HOHS staff are trained to assist personnel potentially exposed or contaminated from hazardous and/or radioactive materials. They can be contacted through the PNNL SPC at 375-2400 or through the POC at 373-3800.

3.2 Building Emergency Response Organization (BERO)

The RPL BERO is an emergency response organization with clearly defined responsibilities. The BERO consists of pre-designated and trained individuals who have been assigned emergency response activities associated with the RPL. In addition, other positions in the RPL have responsibilities associated with emergency responses and preparedness.

BERO Position	Primary Responder	1st Alternate	2nd Alternate
***ICP Communicator**	**Christopher Dryer** Work375-5468 Cell: 420-0533 Home: 628-9995	**Teresa Campbell** Work: 375-5119 Cell: 947-0332 Home: 943-6122	
Assisting Communicator	**Scott Colby** Work: 375-5350 Cell: 554-1780	**Kathy Rightmire** Work: 375-5346 Cell: 528-5954	
Chemical Assessor	**Mike Zabel** Work: 375-5013 Cell: N/A Home: 378-4278	**Doug Falk** Work: 371-7097 Cell: 308-9101 Home: 967-5063	
ICP Hazards Communicator	**Lorna Brown** Work: 375-5006 Cell: 948-2577 Home: N/A	**Terry Milham** Work: 375-5007 Cell: 539-3910 Home: 627-0200	**Forrest Bronson** Work: 371-7825 Cell: 371-7825 Home: N/A
ICP Hazards Assessor (Radiological)	**Jack Horne** Work: 375-5355 Cell: 308-2819 Home: 545-8990	**Bob Free** Work: 375-5597 Cell: 521-5916 Home: 627-0200	**Holly Black-Kania** Work: 371-7793 Cell: 430-0877 Home: NA
ICP Recorder	**Terri Mars** Work: 375-5661 Cell: 539-0722	**Kathy Rightmire** Work: 375-5346 Cell: 528-5954	
***Facility Operations Specialist**	**Ed Arel** Work: 375-5398 Cell: 521-6072 Home: 734-1574	**John Logan** Work: 375-5168 Cell: 438-2079	**Rory Stewart** Work: 375-5178 Cell: N/A Home: 375-3162
Staging Area Supervisor	**Deborah Coffey** Work: 375-5011 Cell: 360-809-3091 Home: 543-7244	**Karl Pool** Work: 375-5246 Cell: 947-4777 Home: NA	**Teresa Schlotman** Work: 375-5323 Cell: NA Home: NA

** These are Testing Designated Positions (TDP) per HDI subject area Workplace Substance Abuse. Any changes to these positions require coordination through the Testing-Designated Position (TDP) Administrator.*

3.3 BERO – EOC Interface

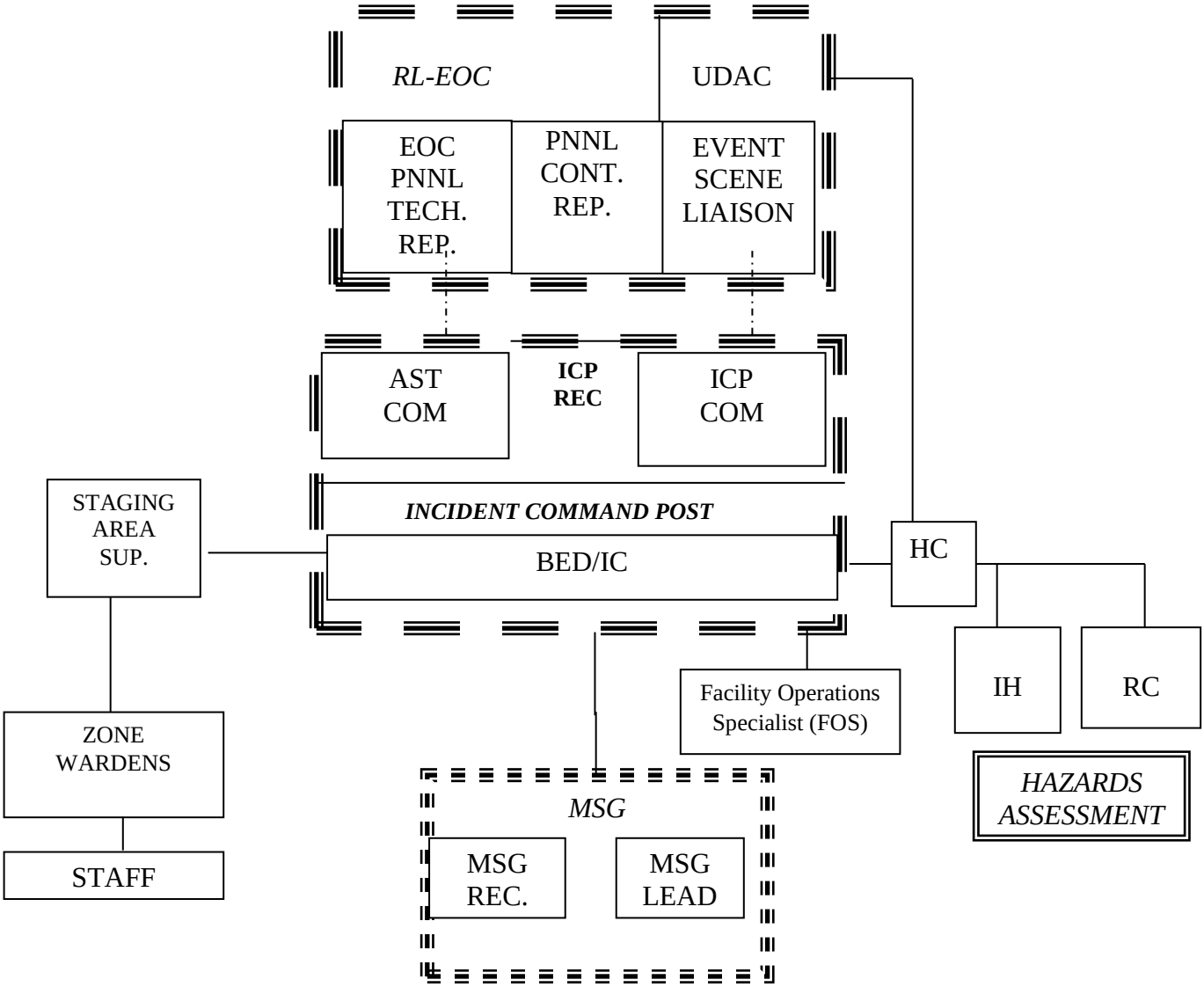

Legend

AST	Assisting	IH	Industrial Hygienist
BED	Building Emergency Director	MSG	Management Support Group
COM	Communicator	RC	Radiation Control
CONT	Contractor	REC	Recorder
EOC	Emergency Operations Center	REP	Representative
FOS	Facility Operations Specialist	SUP	Supervisor
HC	Hazards Communicator	UDAC	Unified Dose Assessment Center
IC	Incident Commander		
ICP	Incident Command Post		

3.4 Building Emergency Directors and Alternates

The BED has the responsibility for the welfare and safety of the building personnel and for directing efforts to control, evaluate, and terminate the event if the building is the site of an event. The BED performs duties of the Emergency Coordinator as prescribed under the WAC [WAC 173-303-360] until relieved by the Incident Commander, and has the authority to commit the resources needed to carry out the BEP.

Note: The BED/BED Alternates function is a Testing-Designated Position (TDP) in accordance with HDI Subject Area, *Workplace Substance Abuse*.

The BED manages facility operations and personnel during an emergency and is responsible for implementation of appropriate emergency procedures and their follow-up 24 hours a day. The BED has the authority to commit the resources necessary to carry out emergency plan activities. Activities include:

- Directing configuration control over facility systems and components at the event scene.
- Activating the BERO.
- Assessing the event scene.
- Allocating personnel to conduct facility-specific emergency response actions within the affected facility boundary (including acting as or delegating duty as the Facility Operations Specialist (FOS) and taking appropriate protective actions in response to events occurring in other onsite geographic areas or adjacent facilities).
- Categorizing the incident and notifying the PNNL Environmental Support Contact and/or the Occurrence Notification Center (ONC).
- Communicating with the Environmental Management Services Department.
- Initiating establishment of a Management Support Group (MSG).
- Reviewing the Emergency Action Levels (EAL) criteria (PNNL-EAL-RPL) and providing an initial EAL classification to the ONC.
- Directing implementation of initial preplanned area/site protective actions.
- Identifying an alternate staging area in the event of an extended building evacuation during inclement weather.
- Determining personnel accountability status within 30 minutes (not to exceed 45 minutes) of emergency determination.
- Performing the necessary steps in the BED Hazardous Material Facilities (RPL) Checklist.
- Verifying other BERO positions use checklists as appropriate.
- Verifying that preservation of evidence at the event scene is taken into consideration during the event.
- Developing and transmitting event reports to maintain accurate and complete records of events, decisions, and actions during an event.

- Verifying the appropriate alarms are sounded when necessary.
- Acting as the IC and a member of the Incident Command Post (ICP) and providing information and assistance to the responding agencies as requested to mitigate the event, including:
    - Identifying the character, exact source, amount, and extent of any released materials.
    - Taking reasonable measures (e.g., stopping processes/operations, collecting/containing released waste, removing/isolating containers) necessary to make sure that fires, explosions, and releases do not occur, recur, or spread to other dangerous waste.
    - Monitoring for leaks, pressure buildup, gas generation, or ruptures in valves, pipes, or other equipment as appropriate.
- Approving reentry and/or rescue operations.
- Arranging care for any injured persons and contacting their line management.
- Notifying the HWTU permit personnel of any planned changes to the BEP.
- Verifying hazardous spill/release events are logged in the HWTU operating records.
- Taking appropriate actions during adverse chemical conditions see HDI Subject Area, *Responding to Spills, Exposure Incidents, or Material Loss*
- Providing a thorough turnover to the Hanford Site emergency responder (e.g., Hanford Fire Department, Hanford Patrol, etc.).
- Maintaining emergency equipment.
- Verifying that the environmental support contact will provide any necessary notifications to regulatory agencies such as the Washington State Department of Ecology and verifying that required written reports to regulatory agencies are completed within 15 days of event termination.
- Performing an annual review and update of the BEP.
- Planning, conducting, and documenting results of building emergency drills.
- Informing the Emergency Response Organization of any changes in RPL BERO staff.
- Being thoroughly familiar with the following:
    - The RPL BEP
    - All operations and activities
    - Locations and characteristics of waste handling
    - Locations of all records
    - Physical layout of the building and area of responsibility.

3.5 Incident Command Post (ICP) Communicator

The individual responsible for conveying the event emergency classification to the ONC, phoning the POC at (9)911373-0911 (cell) to initiate a conference telephone bridge

between the POC, ONC, and ICP Communicator. Initiates and maintains a communication line between the Event Scene Liaison at the DOE-EOC and the ICP. As a precautionary measure, the BED makes sure that this position is staffed for all events. The ICP Communicator is responsible for completing Incident Command Post Communicator Checklist.

Note: The ICP Communicator and alternates is a TDP in accordance with HDI Subject Area, *Workplace Substance Abuse*.

3.6 Assisting Communicator

Provides assistance to the ICP Communicator as directed by:

- Keeping the IC and BED aware of all transmitted and received information.
- Maintaining a log of communications sent and received.
- Establishing and maintaining a communication line with the Technical Support Representative (376-7148) in the DOE-EOC and the ICP throughout the incident.

3.7 Incident Command Post (ICP) Recorder

Records in a time-line format, event-related notifications and activities associated with the direction administered and information received by the ICP.

3.8 Management Support Group (MSG) Lead

The Facilities Operations & Engineering Division (FO&ED) Manager or delegate will respond as the Management Support Group (MSG) leader when requested by the BED.

Note: The MSG lead function and alternates is a TDP in accordance with HDI Subject Area, *Workplace Substance Abuse*.

The MSG lead is responsible for the following:

- Performing the necessary steps listed in ADM-EPIP-7.2, *Management Support Group.*
- Having applicable notifications made to PNNL and DOE management.
- Having the event classified per established PNNL procedures.
- Providing senior management assistance to the BED as necessary.
- Assisting in handling communications and notifications.
- Obtaining personnel, supplies, and equipment as necessary.

3.9 Management Support Group Liaison

Reports to the ICP to facilitate communications between the BED/IC and the MSG. The MSG liaison is responsible for the following:

- Establish phone communications with the MSG as needed to communicate with the MSG.
- Convey BED/IC requests for MSG support to the MSG.

- Communicate information from the MSG to the BED, IC, or other appropriate BERO members.
- Assist the MSG in completing the MSG Checklist while minimizing interference with activities at the ICP by observing activities and communications at the ICP.

3.10 Management Support Group Recorder

Records in a time-line format, event-related notifications and activities associated with the direction administered and information received by the MSG.

3.11 Staging Area Supervisor

The Staging Area Supervisor (SAS) will direct all activities at the building staging area and is responsible for:

- Assisting in personnel accountability by receiving the status of building occupancy from the zone wardens and then informing the BED of facility status with regard to personnel, or if help is needed to locate or account for missing personnel.
- Assisting in area evacuation.
- Assisting with communications.
- Supporting the BED as requested.
- Maintaining a log of their activities or assigning a log-keeper to do so.
- Completing the RPL Staging Area Supervisor Checklist.

3.12 Zone Wardens

Zone wardens and/or alternates provide the results of their accountability sweeps information to the BED via the SAS and assists in additional duties as determined by the BED. To accomplish this function, the zone wardens:

- Determine if all personnel have left their assigned area by performing a thorough room-by-room search, if safe to do so (see Note below), including unoccupied spaces such as stairwells, corridors, elevators, closets, and other common areas.
- Determine if aid and/or rescue are required and without endangering their own safety, aid those who may need help in evacuating the building.
- Report the occupancy status of the assigned zone(s) to the SAS noting areas that could not be checked.

Note: The function of the zone warden is to verify (when possible) that assigned zones have been evacuated as a means of assisting other emergency responders and to verify the locations of building personnel. The function of zone wardens does not include search and rescue; they should not enter any area they feel presents a hazard to them. Once the evacuation alarm is sounded, zone wardens should not enter any location in the facility where there are indications that a hazard may exist. The indications include such things as visible smoke, fire, unusual odors, local alarms, criticality alarms, spilled chemicals, indications on the fire alarm supervisory panel, incapacitated personnel, etc. If a zone warden is not in the facility when the evacuation or take cover alarm is initiated, is a significant distance from their assigned zones, or has been isolated from their zone, they should report to the SAS at the staging area or ICP for instructions.

3.13 Facility Operations Specialist (FOS)

Note: The FOS function is a TDP Position in accordance with HDI Subject Area, *Workplace Substance Abuse*.

This individual, either the BED or designee, is responsible for the immediate mitigative actions at the event scene that cannot be delayed without threatening human health and/or the environment. The FOS is responsible for meeting emergency responders at the event scene and providing information on event status and initial actions that are underway. This position will serve under the direction of the Hanford Fire Department or Hanford Patrol Operations Section Chiefs, upon their arrival, and will provide facility expertise to support operations section activities. The FOS is responsible for implementing the Facility Operations Specialist Checklist and maintains a log of activities, conversations, and directives given and received.

3.14 Hazard Communicator

The Hazard Communicator is a facility or process knowledgeable individual responsible for communicating data to the Uniform Dose Assessment Center (UDAC) for further consequence assessment during DOE-declared emergencies. This position is staffed only during DOE-declared emergencies at the request of the BED/IC. The Hazard Communicator:

- Establishes and maintains an emergency response organization (ERO) communication line with the UDAC Hazards Communicator to provide incident scene radiological or chemical data as reported by the Hazard Assessors.
- Keeps the IC and BED aware of all transmitted and received information.
- Maintains a log, or assigns a log-keeper to record all activities, including the date and time information was received or the time when action was taken.
- Responds to requests for information from the UDAC and assures that requests for information are relayed to the Hazards Assessor(s) for response.
- Implements the Hazards Communicator Checklist.

3.15 Hazards Assessors

There are two different Hazards Assessors for the RPL facility. One assessor deals with radiological hazards and the other deals with chemical hazards.

3.15.1 Radiological Hazard Assessors

The radiological hazards assessors are responsible for coordinating and ensuring accomplishment of radiological control functions throughout the scene. This position reports to the operations section chief at any location. The affected facility's radiological control manager or equivalent will fill this position. The Radiological Hazards Assessor is responsible for:

- Implementing the Radiological Hazard Assessors Checklist.
- Maintaining a log of activities, conversations, and directives given and received.
- Supervises maintenance of a log of radiological protection technologist (RPT) activities.

3.15.2 Chemical Hazard Assessors

The chemical hazards assessors position is filled by an Industrial Hygienist assigned to the Hanford Fire Department (HFD) (the HFD may use facility IH personnel if available until HFD IH personnel arrive), in support of HFD HazMat Team HFD-Medical Staff, and HFD-Safety Officer who will provide technical expertise in chemical and toxicological hazard identification, evaluation, reactivity, and dispersion modeling at the incident scene. The IH may also serve as a chemical/decontamination safety officer, if designated by the IC. Activities will be conducted in accordance with this procedure and other internal HFD procedures as applicable. This position may be staffed for non-declared, RCRA and DOE-declared emergencies as necessary. The Chemical Hazards Assessor is responsible for:

- Implementing the Chemical Hazard Assessors Checklist
- Maintaining a log of activities, conversations, and directives both given and received.

3.16 Individual Staff Member Responsibilities

- Announce and activate the fire alarm when appropriate.
- Read and understand the Emergency Information Posting (EIP) and BEP.
- Become familiar with the location of the BEP on the RPL webpage and the HDI Subject Area, *Emergency Preparedness*.
- Avoid exposure to harmful and life-threatening conditions.
- During emergencies, if it can be done safely, secure classified documents and electronic storage media (ESM) before leaving limited areas. If this cannot be done without endangering yourself: 1) take the classified documents and ESM with you, if time permits; 2) report to the staging area and; 3) inform the BED and then call 375-2400 to report an incident of security concern.
- Provide the BED with any information to assist in evaluating the emergency condition.

- If evacuating due to a fire alarm and you are wearing special PPE or anti-contamination clothing, segregate yourself from others at the staging area until surveyed by a RPT.
- Remain at the staging area and follow the instructions of the BED and SAS.
- Wear your Emergency Preparedness information card.
- When evacuating the RPL due to a fire or a criticality alarm, personnel are authorized to exit the radiological control area(s) without performing radiological exit surveys within the RPL. If a radiological exit survey is not performed, personnel should segregate themselves from others at the staging area until surveyed by RPT's.

3.17 Facility Visitor Responsibilities

The safety of building visitors is the responsibility of the facility host who shall assure that visitors are provided a safe and orderly evacuation. The facility host will report the visitor status to the SAS as soon as is practical after an evacuation.

3.18 Supervisors/Manager Responsibilities

Account for all staff members. Report missing or injured members to the SAS and if requested, assist the SAS.

3.19 Unique Program Laboratory Expertise

The technical knowledge of specific programs/laboratory activities are usually known by the laboratory occupant or program manager. When applicable, cognizant space managers (CSMs), alternate CSMs, and team leads may be contacted in regards to emergencies or off-normal events in assigned laboratories. Hazard Awareness Summaries containing this information are posted throughout the facility.

Rooms 201, 202 and 529 are less than 90-day Radioactive Hazardous Waste Accumulation Areas.

The Treatment, Storage, and Disposal (TSD) areas consist of the following rooms: 32, 200, 201, 202, 203, 520, 524, and 528.

These rooms may contain significant quantities of hazardous waste for short periods of time. This waste can be radioactive, toxic, corrosive, ignitable, reactive, carcinogenic, or environmentally persistent according to the WAC [WAC 173-303].

No one will enter these rooms without permission from one of the individuals whose names are posted on the door.

Wastes stored in these rooms could have significant environmental or health hazards. Incidents involving any of these locations will require hazardous materials expertise by the responders.

3.20 Environment, Safety, and Health Advisor Responsibilities

Provides guidance for establishing safety requirements for mitigation and recovery actions, which include coordinating any support needed from other disciplines of the PNNL Environment, Health, Safety, and Security (EHS&S) Directorate (i.e., Environmental Compliance Representatives (ECR), Radiological Control, Hygiene, and Field Services Representatives [FSR]).

The Environmental Compliance and FSRs conduct activities within specific hazardous waste management activity areas and provide support to the BED in case of an emergency. The environmental support contact (375-2966) will provide any necessary notifications to regulatory agencies such as the Washington State Department of Ecology and transmit required written reports to regulatory agencies within 15 days of event termination.

3.21 Line Management

The responsibilities of line management include the following activities:

- Keeping the BED informed of changes in programmatic activities that could affect an emergency event.
- Providing or verifying that your staff are trained as specified in PNNL-MA-110, *Emergency Management Plan.*
- Keeping the BED and zone wardens informed of any resident staff member in the RPL who has a physical disability.
- Be familiar with the HDI Subject Area, *Injury or Illness*.
- Providing staff who are residents in the RPL, or are qualified Fissionable Material Handlers with a Personal Nuclear Accident Dosimeter (PNAD).

Line management has the responsibility to assure that each PNNL staff member performing work in or having unescorted access approval into the RPL reviews this BEP annually and documents the review with their training coordinator.

3.22 New Staff Assigned to RPL

All new assignees to the RPL facility shall complete initial training within 10 working days of assignment. All temporary personnel with unescorted access are required to receive this training before beginning work in the RPL facility.

4.0 Implementation of the BEP

The decision to implement the BEP should be made whenever unusual or emergency conditions exist that require the response of facility and/or emergency personnel and the establishment of an ICP.

For RCRA events, the BEP must be implemented and the Washington State Department of Ecology notified if all the following criteria are met:

1. The event involves an unplanned spill, release, fire, or explosion;

AND

2a. The unplanned spill or release involves a dangerous waste, or the material involved becomes dangerous waste as a result of the event (e.g., product that is not recoverable),

OR;

2b. The unplanned fire or explosion occurred at a facility or transportation activity subject to RCRA contingency planning requirements;

AND

3. Time-urgent response from an emergency services organization is required to mitigate the event or a threat to human health or the environment exists.

- Based on evaluation of the event, the BED or alternate BED will implement the BEP to the extent necessary to protect human health and/or the environment. The BED has the authority to commit the resources necessary to carry out the actions required by the BEP.
- The BED will direct that additional checklists that are identified in the BEP be initiated and completed. When the materials and quantities involved in the incident have been identified, it should be possible to evaluate the magnitude of the hazard.

During an emergency event, the BED will take all reasonable measures to assure that fires, explosions, and releases do not occur, recur, or spread to other dangerous waste in the facility. Measures include stopping processes and operations, collecting and containing released waste, and removing or isolating containers as appropriate.

In any emergency, priority is given to protection of the health and safety of persons in the immediate area. Containment and cleanup are secondary choices. When responding to minor spill events, onsite personnel will generally perform immediate cleanup of minor spill or releases using facility equipment. Remediation of such spills and releases would not normally constitute activation of the BEP. A spill or release of dangerous waste is considered ‘minor’ if **ALL** of the following are true:

- The spill is either contained, or if outside a secondary containment, is minor in quantity (generally less than 10 gallons of liquid or 100 pounds of solids);
- The composition of the material or waste is known and can be immediately determined from the label, manifest, MSDS, or other records;
- The spill does not threaten the health and safety of building occupants such that an area evacuation is necessary;
- Response personnel have appropriate training and equipment to expeditiously remediate the spill or release.

5.0 Facility Hazards

The RPL contains both radioactive and hazardous chemicals that pose a potential hazard to the public, adjacent facilities, personnel, programs, and the environment during an emergency. Because the location of hazardous materials and equipment within the facility can change on a frequent basis due to specific research needs, a variety of informational tools have been created and integrated into daily operations. Some of the tools available within the facility are the Map Information Tool (MIT), Chemical Management System (CMS), the RPL Operating Envelope webpage, and the Integrated Operations System (IOPS) which includes the Hazard Awareness Summaries for each hazardous space in RPL.

5.1 Hazardous Materials

The RPL building contains hazardous materials including:

- Chemicals exhibiting one or more hazards such as corrosives, oxidizers, flammable solids and liquids, poisons, etc.
- Radioactive materials.
- Hazardous wastes, including listed wastes and waste exhibiting one or more characteristics such as corrosivity, reactivity, ignitability, toxicity, and/or environmental persistence.
- Mixed wastes (wastes containing both radioactive and hazardous components).

Hazards associated with these materials vary depending on type, quantity, and concentration of the material(s) involved in the incident as well as the type of incident.

During an emergency, the PNNL CMS may be consulted to determine the identity and quantity of hazardous chemicals located in affected areas of the facility. The listing of satellite and 90-day accumulation areas (available on the Environmental Management Services Department (EMSD) webpage) may be consulted to identify the location and type of wastes (hazardous and mixed) in the facility. The inventory of waste stored in the RPL RCRA permitted unit may be determined by consulting with EMSD personnel.

Arrangements for local response agencies (fire, police, and medical and emergency response teams) are required to assist in pre-emergency planning. These arrangements include familiarization with the properties of dangerous waste handled at the facility and associated hazards. The Emergency Preparedness Office provides these coordination efforts with input from individual BEDs and others as appropriate.

5.2 Physical (Industrial) Hazards

The RPL building contains industrial hazards such as high-voltage equipment, high-temperature equipment, elevated work areas, and overhead hazards. Refer to the IOPS Hazard Awareness Summaries that are posted at the entrance to each space for specific details.

5.3 Dangerous Mixed Waste

See Section 5.1. Refer to the MIT to identify the location of any dangerous mixed waste location in a specific room.

5.4 Radioactive Materials

See Section 5.1. Refer to the MIT to identify the location of any dangerous mixed waste location in a specific room.

5.5 Criticality

The RPL building is a Hazard Category 2 non-reactor nuclear facility designed as a multi-purpose research facility. Fissionable materials are stored in various locations throughout the building, including the first floor storage room (room 530), laboratories, and the east storage yard.

Storage of fissionable material uses a combination of mass, spacing, geometry, and moderation limits to provide criticality safety. An important criticality control element is through limiting the mass of fissionable material within boundaries of criticality safety controlled areas so that even if two batches were inadvertently stored together, criticality would not occur.

The RPL Documented Safety Analysis (DSA) analyzed various scenarios regarding potential criticality incidents. The Nuclear Criticality Safety Program administered within the RPL provides the administrative and physical controls necessary to assure the possibility of a criticality event remains extremely unlikely. The RPL criticality alarm system is tested on a semiannual basis.

6.0 Potential Emergency Conditions and Appropriate Response

6.1 Explosion/Fire/Fire Alarm

Note: During these events, it is likely that facility integrity may be compromised and that the facility will also experience a concurrent loss of electrical power and/or control of the building ventilation systems. If this is the case, refer to Sections 6.2, *Hazardous Material/Dangerous or Mixed Waste Spill* and 6.6 *Loss of Electrical Power/Reduced Ventilation* for concurrent actions as appropriate.

If you are involved with, or are in close proximity to an explosion, a fire, or discovery of a fire, or have indication that the fire alarm is sounding, perform the following:

6.1.1 Fire/Explosion

Note: If appropriate, classify the event using the RPL EALs.

6.1.1.1 Sound the alarm by pulling the fire alarm pull box. See the guidance for the exception to this step below.

Exception to pulling the fire alarm: If a simple and safe action can be taken that will immediately and positively extinguish a small fire (e.g., pulling the plug on a malfunctioning lab instrument, isolating a fuel source such as quickly closing a valve that is immediately at hand, smothering the flame), then pulling the fire alarm pull box is not necessary, and the fire may be extinguished prior to calling the PNNL Operations Center at 375-2400.

6.1.1.2 Evacuate the building through the nearest exit that can be safely used.

6.1.1.3 Once in a safe location, notify the PNNL Operations Center at 375-2400 and provide the following information (if known):

- Nature and location of the event.
- If the conditions of the event appear to be degrading, (i.e., the fire appears to be escalating or building structures are being compromised).
- Your name and callback telephone number.
- Time event began or was discovered.
- Report the number of any injured personnel.
- If known, include the following: name(s) and amount(s) of any chemical(s) that are involved or may be burning as a result of the fire.

Note: The fire department can be notified directly by calling (9)911373-0911(cell). If the fire department was contacted using this option, also call the PNNL Operations Center at 375-2400 as soon as possible to initiate PNNL management notification and emergency response.

6.1.1.4 If time permits, and without putting yourself in jeopardy, you may fight the fire under the following conditions:

- You have verified that someone has called the PNNL Operations Center at 375-2400 or (9)911 373-0911(cell).
- You have directed someone to pull the fire alarm pull box.
- If you are willing, able, and knowledgeable about the selection of fire extinguisher and its use.

Note: Fire extinguishers equipped with the glove piercing tips are for HFD use only.

- If the fire is in a hot cell attempt to smother the fire or for a large fire, put the fire out using the fire extinguishing system if you are trained to do so.
- If the fire is in a glove box do not attempt to fight the fire using the gloves. Isolate supply air to the glove box if safe to do so.
- If the fire is small and you know what material is burning, the fire does not involve significant quantities of hazardous materials and does not present a personnel exposure hazard to smoke or significant heat.

6.1.1.5 If you have chosen to fight the fire, and after the fire is believed to be out, call the PNNL Operations Center at 375-2400 and inform them of your actions.

- Unless there are significant amounts of smoke or fumes, remain in the proximity of the fire to verify that the fire does not re-flash.
- In the event the fire re-flashes, perform these actions starting with Step 6.1.1, and do not attempt to fight the fire on your own.

6.1.2 Fire Alarm

Note: If appropriate, classify the event using the RPL EALs.

6.1.2.1 If time permits, and without placing yourself in jeopardy, perform the following:

- Verify equipment is shutdown or is in a safe configuration.
- Verify nuclear materials are secured.

6.1.2.2 Zone wardens perform an accountability sweep of their assigned areas.

6.1.2.3 Evacuate the building through the nearest exit that can safely be used.

6.1.2.4 Assemble at the staging area located at the lower south parking lot, north end of lane #9.

a. Zone wardens report the status of their accountability sweep to the SAS.

b. If classified materials (documents, electronic storage media, test materials, etc.) are removed from the Limited Area (LA) or left unsecured within the LA:

- Inform the SAS that classified material has been left in an unsecured condition or has been removed from the LA.

- Call the PNNL Operations Center at 375-2400 and report the details surrounding the classified materials security event.
- The SAS shall provide information to the BED concerning the classified material.

c. Personnel who are wearing PPE clothing or are suspected of being contaminated shall be segregated from other building occupants and shall be surveyed by radiological control personnel. PPE will be discarded as directed by the RPT.

d. Zone wardens and all staff are to remain at the staging area and follow the instructions of the BED.

6.2 Hazardous Material/Dangerous or Mixed Waste Spill

Note: If appropriate, classify the event using the RPL EALs.

6.2.1 For minor spills/releases that are relatively small in size, perform the following:

Note: A spill or release of dangerous waste is considered "minor" if ALL of the following are true. If not refer to section 6.2.2.

- The spill/release is either contained or, if outside of a secondary containment, is minor in quantity (generally less than 10 gallons of liquid or 100 pounds of solids).
- The composition of the material or waste is known and can be immediately determined from the label, manifest, MSDS, or other records.
- The spill/release does not threaten the health and safety of building occupants such that a building evacuation is necessary.
- Response personnel have appropriate training and equipment to expeditiously remediate the spill or release.

6.2.1.1 Move personnel away from the substance.

6.2.1.2 Notify nearby personnel of the emergency.

6.2.1.3 Prevent personnel exposure by restricting access to the spill area by setting up barricades, closing doors, etc.

6.2.1.4 Notify the PNNL Operations Center at 375-2400 and provide the following:

- Nature and location of the event.
- Name(s) of chemicals involved, amounts, sources, and known hazards about the chemicals.
- If the spill has been contained.
- If any material has been released to the environment.
- Any corrective actions in progress.
- Name(s) of anyone contaminated or injured in connection with the incident.
- Other hazards that may or may not be related to the spill.

- Time incident began or was discovered.
- The current status of the event, i.e., spill contained or not contained, etc.
- Name, location, and callback telephone number of person reporting the incident.

6.2.1.5 Notify the BED, CSM, and the safety and health representative.

6.2.1.6 Take steps to contain the spill/release IF and only IF:

a. The identity of the substance is known.

b. The hazards of the substance are known (flammable, toxic, radioactive, corrosive material) and can either be controlled or they do not present an immediate threat.

c. Appropriate PPE and control/cleanup supplies are readily available.

d. The individual(s) performing the task have had training related to spill/leak control and can safely perform the action(s) without assistance, or assistance is readily available from other trained personnel.

6.2.1.7 Steps to contain the spill/release may include, as appropriate:

a. Build a containment of absorbent materials and restrict access to the affected area.

b. Tighten closures; tip the container to stop the leak, use plugging, or patching materials or over packing.

c. Perform initial cleanup of the spill area by transferring contents to appropriate non-leaking containers using the appropriate procedures and tools.

6.2.2 For a major spill/release, or tank spills, perform the following actions.

Note: If appropriate, classify the event using the RPL EALs.

6.2.2.1 If the spill/release threatens the health and safety of building occupants such that a building evacuation is necessary, initiate a building evacuation by pulling the fire alarm. If a building evacuation is not necessary, continue at section 6.2.2.2.

a. Assemble at the staging area located at the lower south parking lot, north end of lane #9.

1. Zone wardens report to the SAS.

2. If classified materials (documents, electronic storage media, test materials, etc.) are removed from the LA or left unsecured within the LA:

- Inform the SAS that classified material has been left in an unsecured condition or has been removed from a LA.

- Call the PNNL Operations Center at 375-2400 and report the details surrounding the classified materials security event.
- The SAS shall provide information to the BED concerning the classified material.

3. Personnel who are wearing PPE clothing or are suspected of being contaminated shall be segregated from other building occupants and shall be surveyed by radiological control personnel. PPE will be discarded as directed by the RPT.
4. Zone wardens and all staff are to remain at the staging area and follow the instructions of the BED.

6.2.2.2 Move personnel away from the substance.

6.2.2.3 Notify nearby personnel of the emergency.

6.2.2.4 Notify the PNNL Operations Center at 375-2400 and provide the following:

- name, location, and callback telephone number of person reporting the incident.
- name(s) of chemical(s) involved and amount(s) involved in the incident.
- location of incident (identify as closely as possible and include information about multiple building numbers).
- time incident began or was discovered.
- where the materials involved are going or might go, such as into secondary containment, under doors, through air ducts, etc.
- source and cause, if known,
- name(s) of anyone contaminated or injured in connection with the incident.
- any corrective actions in progress.
- anyone else who the discoverer has contacted.
- any known hazards.
- where and when the chemical condition or spill occurred.
- if any material was released to the environment (e.g., to a stack or a sewer system).
- the status of the situation.

6.2.2.5 Prevent personnel exposure (e.g., set up barricades).

6.2.2.6 Contact the Cognizant Space Manager (CSM).

6.2.2.7 Notify the safety and health representative.

6.2.2.8 Take steps to contain the spill ONLY IF ALL THE FOLLOWING EXIST:

- The identity of the substance is known.
- The hazards of the substance are known (flammable, toxic, radioactive, corrosive material) and can either be controlled or they do not present an immediate threat.
- Appropriate protective equipment and control/cleanup supplies are readily available.
- The individual(s) performing the task have had training related to spill/leak control and can safely perform the action(s) without assistance, or assistance is readily available from other trained personnel.

6.2.2.9 Initiate actions to mitigate a tank spill/leak using trained personnel:

- Stop the source of the leak if possible (shutting valves, turning off pumps, etc.).
- Prevent further additions of liquid to the tank.
- Visually inspect the tank system to determine the source of the leak.
- Within 24 hours, remove as much of the liquid from the tank as is practicable to prevent further leakage.
- Remove any leakage contained in a secondary containment within 24 hours or as soon as practicable.
- Prevent any further leakage or migration of the leak to soils or surface waters.

6.2.2.10 Notify the BED, the CSM, and the safety and health representative of any pertinent information that you may have.

- The discoverer of the spill will provide a synopsis of the event and the actions taken to the BED, CSM, and the safety and health representative.
- Upon completion of the event briefing, the BED will direct spill event mitigation activities.

6.2.3 For events that involve transportation and/or damaged packaging of hazardous material or dangerous waste that arrives at the RPL:

Note: If appropriate, classify the event using the RPL EALs.

6.2.3.1 <u>DO NOT</u> move the shipment.

6.2.3.2 Notify the BED, CSM, and the safety and health representative.

- The receiver of the shipment or discoverer of the damaged package will provide a synopsis of the situation and the actions taken if any, to the BED, CSM, and the safety and health representative.

6.2.3.3 The BED will evaluate the event and initiate appropriate actions for minor events/spills per Section 6.2.1 or 6.2.2 as appropriate.

- Treat any release from the package as a hazardous material spill and perform response actions as appropriate.

6.3 Unusual, Irritating or Strong Odors

6.3.1 If an unusual odor is detected and the source is unknown, the type and location of the odor should be reported to the BED; the BED will determine the appropriate actions.

6.3.1.1 If the odor is determined to be potentially dangerous, then,

a. Initiate a building evacuation by pulling the fire alarm.

b. Assemble at the staging area located at the lower south parking lot, north end of lane #9.

c. Zone wardens report to the SAS.

d. If classified materials (documents, electronic storage media, test materials, etc.) are removed from the LA or left unsecured within the LA:

- Inform the SAS that classified material has been left in an unsecured condition or has been removed from the LA.
- Call the PNNL Operations Center at 375-2400 and report the details surrounding the classified materials security event.
- The SAS shall provide information to the BED concerning the classified material.

e. Personnel who are wearing PPE clothing or are suspected of being contaminated shall be segregated from other building occupants and shall be surveyed by radiological control personnel. PPE will be discarded as directed by the RPT.

f. Zone wardens and all staff are to remain at the staging area and follow the instructions of the BED.

6.4 Potential Radiological Material Release

Note: If appropriate, classify the event using the RPL EALs.

Note: If readings are provided in Becquerels. A Becquerel is a SI unit of radioactivity equal to one disintegration per second. Conversion to dpm (disintegration per minute): Multiply total Becquerel's by 60.

6.4.1 Area Radiation Monitor (ARM)

a. Stop work.

b. Alert personnel in the area.

c. Exit the RCA that is being monitored by the ARM.

d. Notify the RPT and the BED.

e. Notify the PNNL Operations Center at 375-2400.

6.4.2 Continuous Air Monitor (CAM) or ALPHA Sentry Cam

a. Stop work.

b. Alert personnel in the area.

c. Exit the area being monitored by the CAM and move into a separate air space.

d. Notify the RPT and the BED.

e. Notify the PNNL Operations Center at 375-2400.

6.4.3 Glove box differential pressure alarm

a. Stop work.

b. Alert personnel in the area.

c. Exit the immediate area.

d. Notify the RPT and the BED.

e. Notify the PNNL Operations Center at 375-2400.

6.4.4 Hot cell differential pressure alarm

a. Stop work.

b. Alert personnel in the area.

c. Exit the immediate area.

d. Notify the RPT and the BED.

e. Notify the PNNL Operations Center at 375-2400.

6.5 Criticality

6.5.1 In the event of a criticality alarm, perform the following:

Note: If appropriate, classify the event using the RPL EALs.

6.5.1.1 Leave the building immediately through the closest exit.

6.5.1.2 Zone wardens are also directed to leave the building immediately without performing accountability sweeps of their zones.

Note: Obstacles located within 100 feet of the building (fences, walls, trenches, etc.) may prevent running directly away from the building for 100 feet. Choose a path around these barriers that will maximize your distance from the building. When past the obstacle, continue directly away from the building until you are 100 feet from the building. See Attachments 1-3, *Emergency Equipment & Evacuation Routes* for suggested routes to the RPL Staging Area.

6.5.1.3 Run at least 100 feet directly away from the building, then proceed to the staging area along a path that does not take you closer to the building.

6.5.1.4 Assemble at the staging area located at the lower south parking lot, north end of lane #9.

a. Zone wardens report to the SAS.

b. If classified materials (documents, electronic storage media, test materials, etc.) are removed from the LA or left unsecured within the LA:

- Inform the SAS that classified material has been left in an unsecured condition or has been removed from the LA.
- Call the PNNL Operations Center at 375-2400 and report the details surrounding the classified materials security event.
- The SAS shall provide information to the BED concerning the classified material.

c. Personnel who are wearing PPE clothing or are suspected of being contaminated shall be segregated from other building occupants and shall be surveyed by radiological control personnel. PPE will be discarded as directed by the RPT.

d. Per RCP-8.1.02, initiate "Quick-Sort Survey of Personnel."

e. Determine the radiation dose levels at the staging area and in the evacuated area following a criticality accident.

f. Dose rates and report findings shall be reported to the BED.

g. Zone wardens and all staff are to remain at the staging area and follow the instructions of the BED.

6.6 Loss of Electrical Power/Reduced Ventilation

6.6.1 In the event of a loss of or a significant interruption to building electrical power and/or a reduction in ventilation flow, perform the following:

6.6.1.1 Place laboratory or room in safe condition per the following:

a. Verify fume hoods and sashes are closed.

b. Verify equipment is shutdown.

c. Verify nuclear material(s) are secure.

d. Verify that classified materials are secure.

e. Verify all hazardous materials are secure.

6.6.1.2 If the building electrical power returns and/or standby power are still available:

a. Assemble in the lunchroom.

b. If classified materials (documents, electronic storage media, test materials, etc.) are removed from the LA or left unsecured within the LA:

- Inform the SAS that classified material has been left in an unsecured condition or has been removed from the LA.
- Call the PNNL Operations Center at 375-2400 and report the details surrounding the classified materials security event.
- The SAS shall provide information to the BED concerning the classified material.

c. Personnel exiting the radiological buffer areas (RBA) are expected to do so without surveying through the PCMs.

d. Personnel who are wearing PPE clothing or are suspected of being contaminated shall be segregated from other building occupants and shall be surveyed by radiological control personnel. PPE will be discarded as directed by the RPT.

e. Zone wardens for Zones 2 and 8 are requested to activate the flashing red warning lights.

f. Zone wardens and all staff are to remain at the lunchroom and follow the instructions of the BED.

g. Radiological surveys of the facility shall be performed prior to re-entry.

6.7 Natural Phenomena Events

Note: If appropriate, classify the event using the RPL EALs.

The natural phenomena events that are considered as having a probability of occurring and are addressed in this procedure are seismic event/earthquake, volcanic eruption/ash fall, high wind/tornado, flood, and range fire.

If these events were to occur, Hanford TNS messages will most likely be sent before, during, or immediately following the event. Regardless of the receipt of a phone message, the BED will direct activities within the facility in accordance with this procedure and provided by phone messages as appropriate.

Should it become necessary to evacuate the facility, the BED will report the evacuation to the PNNL Operations Center at 375-2400, and the Occurrence Notification Center, (ONC) at 376-2900.

6.8 Bomb Threats/Suspicious Objects

Note: If appropriate, classify the event using the RPL EALs.

6.8.1 If a suspicious object is discovered, or the placement of such an object is observed, perform the following actions:

6.8.1.1 Do not move, open, or otherwise disturb any suspicious objects.

6.8.1.2 Notify the PNNL Operations Center at 375-2400 and the RPL BED using office telephones only.

6.8.1.3 Evacuate the facility. DO NOT USE THE FIRE ALARM PULL BOX TO INITIATE THE EVACUATION.

a. Warn others in the immediate vicinity.

b. Leave the building immediately via the closest exit.

c. Zone wardens are also directed to leave the building immediately without performing accountability sweeps of their zones.

6.8.1.4 Cease all use of cellular phones, radios, or other radio frequency generating equipment.

6.8.1.5 Assemble at the staging area located at the lower south parking lot, north end of lane #9 or in an area that is located a minimum of 300 feet from the potential hazard, whichever is further.

a. Zone wardens report to the SAS.

b. If classified materials (documents, electronic storage media, test materials, etc.) are removed from the LA or left unsecured within the LA:

- Inform the SAS that classified material has been left in an unsecured condition or has been removed from a LA.
- Call the PNNL Operations Center at 375-2400 and report the details surrounding the classified materials security event.
- The SAS shall provide information to the BED concerning the classified material.

c. Personnel who are wearing PPE clothing or are suspected of being contaminated shall be segregated from other building occupants and shall be surveyed by radiological control personnel. PPE will be discarded as directed by the RPT.

d. Zone wardens and all staff are to remain at the staging area and follow the instructions of the BED.

6.8.2 If a telephone bomb threat is received:

6.8.2.1 Record the message exactly as dictated and attempt to obtain the following information:

- When will it go off?
- Where it is located?
- What it looks like.
- What kind it is.

- Why it was placed?
- Who placed it?
- How you know so much about it?
- Who placed it?
- Where are you calling from?
- What's your name and address?

6.8.2.2 Notify the PNNL Operations Center at 375-2400 and provide the information given by the caller.

6.8.2.3 Upon completion of the notifications to the PNNL Operations Center, also notify the BED and provide the information obtained from the caller.

6.8.3 If a written bomb threat is received,

6.8.3.1 Notify the PNNL Operations Center at 375-2400.

6.8.3.2 Provide the written bomb threat to the RPL BED who will forward it to the PNNL Subject Matter Expert/Safeguards and Security Management Official.

6.9 Hostage Situation/Armed Intruder

6.9.1 When condition is observed,

6.9.1.1 Notify the PNNL Operations Center at 375-2400 and provide the requested information.

6.9.1.2 Take cover in an office with the door closed if available, otherwise,

6.9.1.3 Evacuate from the building if located in cubicle or in an office without doors.

6.9.1.4 If possible, notify the BED and provide as much information as is available.

6.9.1.5 Assemble at the staging area located at the lower south parking lot, north end of lane #9.

a. Zone wardens report to the SAS.

b. If classified materials (documents, electronic storage media, test materials, etc.) are removed from the LA or left unsecured within the LA:

- Inform the SAS that classified material has been left in an unsecured condition or has been removed from the LA.
- Call the PNNL Operations Center at 375-2400 and report the details surrounding the classified materials security event.
- The SAS shall provide information to the BED concerning the classified material.

c. Personnel who are wearing PPE clothing or are suspected of being contaminated shall be segregated from other building occupants and shall be surveyed by radiological control personnel. PPE will be discarded as directed by the RPT.

6.9.2 Building Emergency Director Response

6.9.2.1 Request the safeguards and security representative be notified.

6.9.2.2 Safely evacuate staff from the building when office spaces are cubicles. Those close to the event scene should take cover in a locked room or in whatever space is available.

6.9.2.3 If possible, clear the area of personnel.

6.9.2.4 Do not move any suspicious objects.

6.9.2.5 Post warnings, if applicable.

6.9.2.6 Provide emergency responders with appropriate information upon arrival.

6.9.2.7 Keep staff from entering the affected area.

6.9.2.8 If appropriate, classify the event using the RPL EALs.

6.9.2.9 Activate the MSG.

6.9.2.10 Request medical assistance if necessary.

6.10 Declared Emergency in the 300 Area

6.10.1 Personnel will evacuate the facility or take cover as directed by the BED.

6.10.2 If the declared emergency originates in the RPL facility, the BED shall take actions that are in accordance with the BEP and inform and direct other 300 Area contractors and other facility owners of the emergency declaration in accordance with their emergency procedures.

7.0 Facility Take Cover - Shutdown of HVAC

7.1.1 If outside of the RPL, perform the following:

7.1.1.1 Take cover inside the nearest building.

7.1.1.2 If the building you take cover in is not the RPL, attempt to contact your line manager or team lead and have them report your whereabouts to the RPL SAS.

7.1.1.3 If unable to contact your management, report to the building emergency response organization for the building where you are located so your personal accountability may be made.

7.1.1.4 Follow directions provided by that building's emergency organization or BED.

7.1.2 If you take cover inside the RPL, remain inside the RPL.

7.1.2.1 Assemble in the lunchroom.

7.1.2.2 Staff should refrain from eating and drinking during a take cover event if physically able, until an appropriate evaluation of the event can be made.

7.1.2.3 If classified materials (documents, electronic storage media, test materials, etc.) are removed from the LA, or left unsecured within the LA:

- Inform the SAS that classified material has been left in an unsecured condition, has been removed from the LA, and the status/location of the classified material.
- Call the PNNL Operations Center at 375-2400 and report the details surrounding the classified materials as a security event, and provide details as necessary.
- The SAS shall provide information to the BED concerning the classified material.

7.1.2.4 Personnel who are wearing PPE clothing or are suspected of being contaminated shall be segregated from other building occupants and shall be surveyed by radiological control personnel. PPE will be discarded as directed by the RPT.

7.1.2.5 Zone wardens for zones two and eight are requested to activate the flashing red warning lights.

7.1.2.6 Zone wardens and all staff are to remain in the lunchroom and follow the instructions of the BED.

8.0 Utility Disconnects

Utility disconnects may be necessary under extreme emergency conditions. The RPL BED will determine if utility disconnects need to be disconnected/shut. Locations of the utility disconnects or valves are described as follows:

8.1 Electrical

The RPL Building main electrical control center switchgear is located on the second floor (northwest corner) in room 904. Extreme caution shall be used if disconnecting this power.

8.2 Potable/Process Water

The internal valves are located in the southwest corner of room 22 in the basement. The external post-indicating valve (black standpipe PIV) is located outside at the southwest corner of the RPL building.

8.3 Gas Supplies

The P-10 gas distribution system is located at the northeast end of the north gas cylinder dock. Turn cylinders off as directed by the RPL BED.

8.4 Steam

The high-pressure steam supply valves are located above the power operator's workstation entry door on the second floor east equipment room. Steam to the RPL may also be isolated using valves inside the Johnson Controls operated 325B boiler house, if access to the RPL is not possible.

8.5 Air

The external high-pressure compressed air supply isolation valve is located northeast of the air receiver tank that is located in the northeast corner of the basement. Compressed air to the RPL may also be isolated using isolation valves at the air compressor located outside the RPL at the northeast corner of the RPL if access to the RPL basement is not possible.

To remove all sources (except gas cylinders) of high and low-pressure compressed air in the RPL and the RPL Filter Building, compressed air from the emergency compressor (CA-97-COMP) located in the northeast corner of the basement must also be isolated or the compressor shutdown. Isolation of compressed air from the compressor is accomplished by shutting valve CA-96-VLV, which is located just north of the air compressor. The compressor may be shutdown using its control switch adjacent to the compressor or by turning off electrical power to the compressor by opening breaker "2D" on motor control center SMCC-B-B2 which is located in the northwest corner of the RPL basement. If the basement is not accessible, electrical power to the compressor must be turned off at a breaker upstream of SMCC-B-B2.

8.6 Ventilation

Facility exhaust and supply fan controls are located:

- At the power operator workstation (room 900).
- In the north part of the basement, west of the elevator.

- Additional exhaust fan controls are on the starter enclosure for each exhaust fan inside the RPL Filter Building.

External shutdown of the main exhaust and supply fans may be accomplished under extreme circumstances by removing both normal and standby electrical power from the building. A more controlled external shutdown of the main exhaust and supply fans is a complicated evolution involving multiple operating locations that must be accomplished in a specific sequence under supervision of RPL knowledgeable staff to prevent the risk of loss of building containment due to creation of a positive pressure inside the building.

8.7 Fire Protection Supply Water

Fire Suppression Supply Water Post Indicator Valves (Red PIVs) for Risers 1 through 5 are located outside the RPL building in the following locations:

- Riser #1 PIV is located at the northwest corner of the RPL building by the 328 building boiler annex.
- Riser #2 PIV is located at the north area inside the fenced area south of the 328 building.
- Riser #3 PIV is located at the southwest corner of the RPL building.
- Riser #4 PIV is located southeast of the RPL-A annex.
- Riser #5 PIV is located southeast of the RPL-A annex.

8.8 Dry Pipe OS&Y (Riser #6)

The OS&Y valve for the dry pipe fire suppression system on the north gas cylinder dock is located on the second floor in the east equipment room at the north wall. Suppression water for this system is supplied from Riser #2 and may be isolated external to the RPL by shutting the PIV for Riser #2.

8.9 RPL Ramp Sump Pump

Water runoff down the RPL basement truck ramp at the southwest corner of the building is collected in a sump at the bottom of the ramp. The associated sump pump empties the sump as needed to prevent it from overflowing into the RPL basement through the roll-up door. The sump pump discharges to the street in front of the RPL.

Potentially contaminated fire suppression water runoff from inside the RPL basement could also enter this sump and be pumped to the street in front of the building resulting in an unacceptable spread of contamination.

The local disconnect for the sump pump is located inside the south roll-up door on the east side of the door.

9.0 Termination, Incident Recovery, and Restart

9.1 Termination

The Incident Commander, in consultation with the BED will recommend termination of the event when conditions indicate that it is safe to do so. The Event Closeout Form should be completed before any recommendation is made to terminate a declared emergency.

9.2 Recovery

Depending on the circumstances of the event, a recovery team consisting of the Incident Commander, RPL BED, and appropriate SMEs will develop and recommend a recovery plan for restoring the facility to operable status. Emphasis will be placed on the careful cleanup of released material and contaminated debris to minimize further risk to personnel, the public, or the environment while preserving evidence at the event scene. All waste materials generated by the cleanup will be containerized in drums or other appropriate containers and stored in an approved storage area pending characterization and determination of the final treatment/disposal requirements. The recovery plan will be reviewed and approved and meet the requirements of the PNNL-MA-110, *Emergency Management Plan*, Termination and Recovery.

The BED is responsible for assuring that emergency equipment is clean and fit for its intended use prior to resumption of operations. Equipment used during an incident will be decontaminated (if practicable) or disposed of as spill debris. Decontaminated equipment will be checked for proper operation prior to storage for subsequent use. Consumables and disposed materials will be restocked. Fire extinguishers will be recharged or replaced.

For emergency events involving the TSD or a 90-day accumulation area, the recovery plan will include the appropriate notification of the Washington State Department of Ecology and appropriate local authorities of recovery actions taken prior to restart. The operator of the TSD will also provide a written report to the Department of Ecology within 15 days after the incident or within 30 days after the incident for a release from a tank system to the environment that does not result in an activation of the contingency plan.

9.2.1 Emergency Decontamination Facilities

The RPL facility has only limited decontamination capability. Radiological control personnel are the only staff that may perform personnel decontamination.

If an evacuation of the RPL facility occurs and re-entry is not possible to decontaminate affected personnel, radiological control supervision may use the 3410 building personnel decontamination facility located in room 1601. In the event that the affected personnel are injured, they should be transported directly to Kadlec Medical Center. If large group decontamination facilities are requested, request assistance from the Hanford Fire Department Mobile Decontamination Facility.

9.2.2 Emergency Radiological Exposure Guidelines

In extremely rare cases, emergency exposure to radiation may be required to rescue personnel or protect major property. Emergency exposure may be

authorized in accordance with the provisions contained in 10 CFR 835. The dose limits for personnel performing these operations are listed in Table 9.1.

Note: Only RadWorker 2 trained staff are allowed to volunteer for receiving emergency radiological exposures.

The lens of the eye dose limit should be three times the listed values. The shallow dose limit to the skin of the whole body and the extremities is ten times the listed values.

Table 9.1. *Emergency Dose Limits*

Dose Limit (Total Effective Dose Equivalent)	**Activity Performed**	**Conditions**
5 rem	All	N/A
10 rem	Protecting major property	Only on a voluntary basis where lower dose limit not practicable
25 rem	Lifesaving or protection of large populations	Only on a voluntary basis where lower dose limit not practicable
> 25 rem	Lifesaving or protection of large populations	Only on a voluntary basis to personnel fully aware of the risk involved

9.3 Restart

Restart of the facility following emergencies will be conducted in a manner consistent with the recovery plan. Before operations are resumed in the facility, all emergency equipment used during the emergency event shall be cleaned and restored to usable, operable condition. If the event involved a container storage area within the HWTU, the container storage and containment system should be evaluated before restart. If the event involved a tank system leak, repairs must be certified by an independent, qualified, registered professional engineer.

10.0 Emergency Equipment

Support equipment available to assist in responding to an emergency can be found by referring to DOE/RL 94-02, Section 11.2 and the Hanford Fire Department emergency equipment listing in Appendix C of 94-02.

10.1 Portable Emergency Equipment

None

10.2 Fire Control Equipment

- Portable Class ABC Fire Extinguishers are located throughout the facility. Each Class ABC extinguisher is capable of suppressing fires involving ordinary combustible materials, flammable liquids, oils, paints, flammable gases, and fires involving electrical equipment. Class D extinguishers will be located in areas vulnerable to Class D fires if reactive metals are stored there (e.g., dangerous waste storage room). Manual dry chemical fire extinguishers are installed in the SAL hot cells and are available outside the HLRF A and B hot cells. The fire extinguisher locations are identified on the floor plans (Attachments 1-3).
- Portable Class ABC Fire Extinguishers with piercing tips are located in each lab that contains a glovebox. These extinguishers are for the HFD use only. RPL staff have not been trained in their use. The piercing tipped fire extinguisher locations are identified on the floor plans (Attachments 1-3).
- RPL is equipped with an automatic fire detection, alarm, and suppression system. Five wet pipe and one dry pipe sprinkler system provide automatic fire suppression.
- A Mobile Command Post Vehicle can be obtained from the Hanford Fire Department (HFD) at 373-2230. The HFD Battalion Commander will approve and dispatch the vehicle.

10.3 Communications Equipment/Warning Systems

- Fire alarm pull boxes are located throughout the facility. The primary locations are at all exits of the facility. All locations are shown on the floor plans (Attachments 1-3).
- Hanford Site Telephone Notification System (TNS) is a component of the Hanford Emergency Notification System and designed to use the existing telephone system to notify individual employees. When the phone is answered, a recorded message will provide event information and inform staff of actions they are expected to take.
- PNNL Communicator Notification System (CNS) is a system that will allow emergency messages to be communicated quickly to all staff via the PNNL phone system. Phones at PNNL in offices, conference rooms, and common areas such as lobbies, conference rooms, and lunchrooms are connected to the system. When the phone is answered a recorded message will provide event information and inform staff of actions they are expected to take.
- A criticality alarm system (CAS) is present in the building. The system is equipped with neutron sensitive criticality detectors. The CAS alarms in locations where the expected dose from an accidental criticality may exceed 12-rads in free air. The

system is tested and maintained in accordance with preventive maintenance procedures.

> **Note:** These systems are not considered emergency equipment and may not be available during all types of emergencies.

- Other non-emergency communications equipment installed in RPL include:
  - Public address system. (#8 on select phones)
  - Public address system in the fire alarm control panel.
  - Commercial telephone system that may also be used to summon assistance during an emergency.
  - Hand held radios provided by the BED.

10.4 Personal Protective Equipment (PPE)

Safety showers and eyewash units are installed at several locations throughout the facility including waste storage areas. All locations are shown on the floor plans (Attachments 1-3).

Personnel protective clothing and respiratory equipment is available in the facility for use during both routine and emergency operations. This equipment includes:

- Chemically resistant suits, aprons, boots, and gloves.
- Protective glasses.
- Chemical goggles.
- Face shields.
- Full-face respirators with extra cartridges.
- Radiological clothing.

Kits containing a variety of radiation monitoring instruments, forms, and equipment are available for use in an emergency. PNNL maintains these kits, which contain protective apparel, instruments, and equipment for personnel decontamination and other immediate emergency needs. These supplies and equipment are only adequate to fulfill immediate needs during the initial stages of an emergency.

10.5 Spill Control and Containment Supplies

Spill kits are located throughout the facility and are maintained by the CSMs. Additional spill kit materials can be obtained in room 527. The following emergency equipment is maintained in (or adjacent to) each of the 90-day hazardous waste accumulation areas. The amount of material maintained varies depending on the amount of waste being accumulated at the individual 90-day area.

- Commercially available granular absorbent (e.g. diatomaceous earth)
- Absorbent pads
- Commercially available acid neutralizer[1] (e.g. granular sodium bicarbonate)
- Commercially available caustic neutralizer[2] (e.g. dilute boric acid solution)
- Personal Protective Equipment

- Safety glasses with side shields
- Lab coat
- Leather gloves
- Chemical resistant gloves (e.g. nitrile)

[1] Required in accumulation areas containing liquid acidic wastes.
[2] Required in accumulation areas containing liquid caustic wastes.

11.0 Evacuation of Persons with a Disability, or Visitors

RPL occupants shall be aware of disabled resident staff that may require evacuation assistance. A specific evacuation plan may be required for disabled staff members. Alternate housing for staff that are sensitive to excessive hot or cold conditions (temperately disabled) may be required due to emergency response actions.

Note: Alternate Staging Area – in the event of an extended building evacuation during inclement weather, the 350 building, or other indoor locations deemed safe may be used for housing staff at the discretion of the BED.

Staff members who are planning to bring a disabled visitor to the building shall contact the BED to determine if a specific evacuation plan will be required.

The safety of building visitors is the responsibility of the host, who shall assure that visitors are provided a safe and orderly evacuation. The host shall report the visitor status to the appropriate zone warden as soon as is practical, after the evacuation.

12.0 Emergency Action Levels

12.1 300 Area Protective Actions

300 Area Onsite Protective Actions		
Classification	**Action**	**Implemented by**
Alert	• Evacuate or shelter affected facility personnel.	Facility
	• Shelter 300 Area and 600 Area. • Initially restrict access at: - WNP 1 Access Road and Route 4S. - George Washington Way Extension (to 300 Area) intersection with George Washington Way. - George Washington Way intersection with Stevens Drive. (Roadblocks can be relocated based upon consequence assessment upon approval by the IC/SED.)	POC (Quick Reaction Checklist)
Site Area/ General Emergency	• Evacuate or shelter affected facility personnel.	Facility
	• Shelter 300 Area, HAMMER, Patrol Training Academy, Cold Test Facility, and adjacent 600 Areas. • Restrict access at: - WNP 1 Access Road and Route 4S. - Horn Rapids intersection with George Wash. Way. - Horn Rapids intersection with Stevens Drive.	POC (Quick Reaction Checklist)
	• Plan for subsequent 300 Area evacuation as required.	Hanford EOC
300 Area Offsite Protective Actions & Recommendations		
Classification	**Action**	**Implemented by**
Alert	• None	N/A
Site Area Emergency	• Implement evacuation of Columbia River from Vernita Bridge to Leslie Groves Park • Close Highway 240.	POC and Counties (RLEP 3.3) Washington State Patrol (RLEP 3.8, Appendix H)
General Emergency	• Implement evacuation of Columbia River from Vernita Bridge to Leslie Groves Park/. • Evacuate 2.2-mile radius. • Close Highway 240.	POC and Counties (RLEP 3.3) Benton/Franklin Counties Washington State Patrol (RLEP 3.8, Appendix H)

12.2 RPL Emergency Action Levels

The Emergency Action Level (EAL) Tables are published in DOE-0223, *Emergency Plan Implementation Procedure for RPL*, and can be obtained from the RPL Building Manager.

13.0 Attachments

Attachment 1 – Emergency Equipment & Evacuation Routes - 1st Floor

Attachment 2 – Emergency Equipment & Evacuation Routes – 2nd & 3rd Floors

Attachment 3 – Emergency Equipment & Evacuation Routes – Mezzanine & Basement

Attachment 4 – Zone Warden Areas – 1st Floor

Attachment 5 – Zone Warden Areas – 2nd & 3rd Floors

Attachment 6 – Zone Warden Areas – Mezzanine & Basement

Attachment 7 – Staging Area Map

Attachment 8 – Location of RPL in the 300 Area

Attachment 1 – Emergency Equipment & Evacuation Routes - 1st Floor

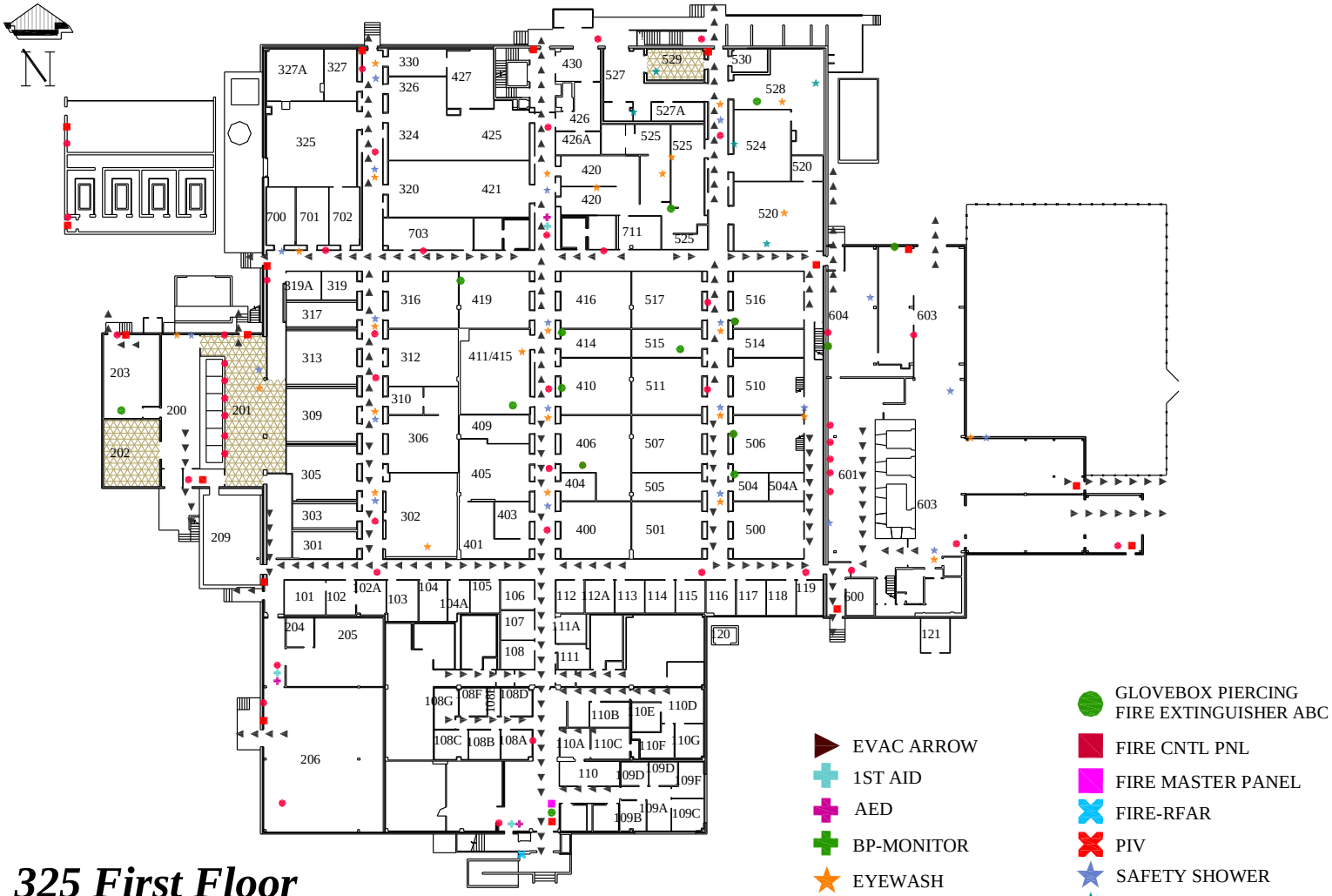

325 First Floor

EMERGENCY EQUIPMENT & EVACUATION ROUTES

REV. 4/11

Jordan Fiskum * Engineering & Design Services

Attachment 2 – Emergency Equipment & Evacuation Routes - 2nd & 3rd Floors

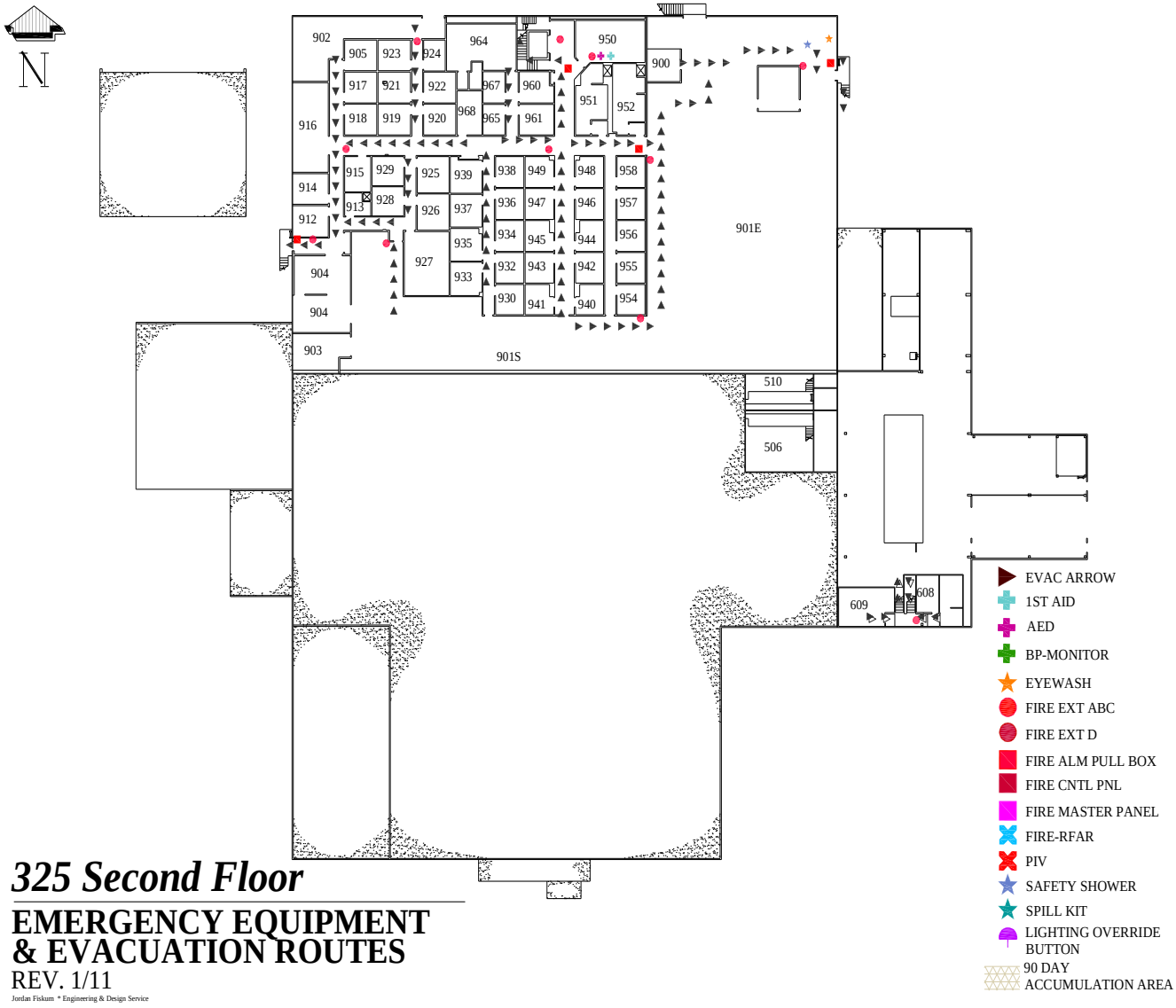

Attachment 3 – Emergency Equipment & Evacuation Routes - Mezzanine & Basement

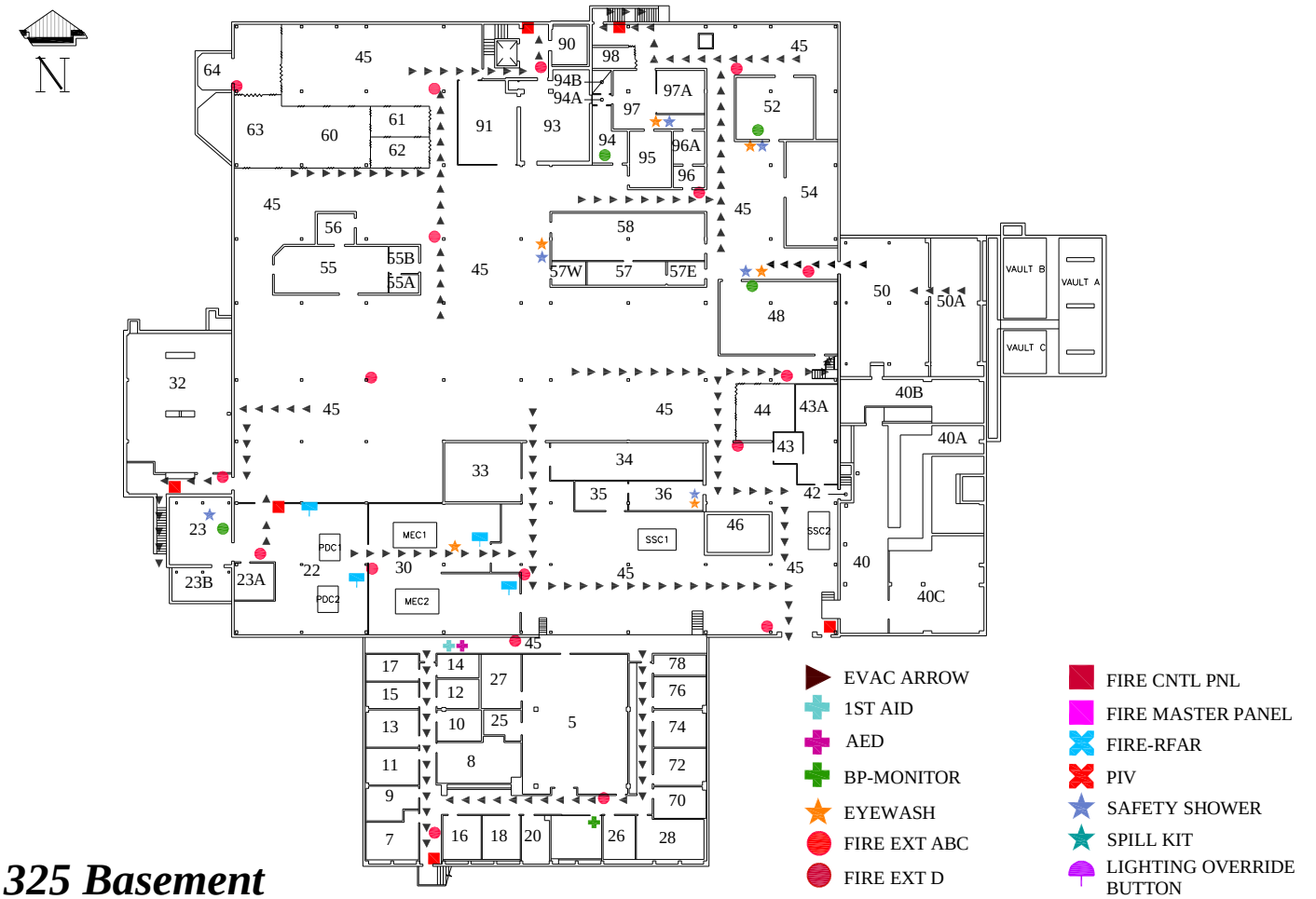

325 Basement

EMERGENCY EQUIPMENT & EVACUATION ROUTES

REV. 1/11

Jordan Fiskum * Engineering & Design Services

Attachment 4 – Zone Warden Areas – 1st Floor

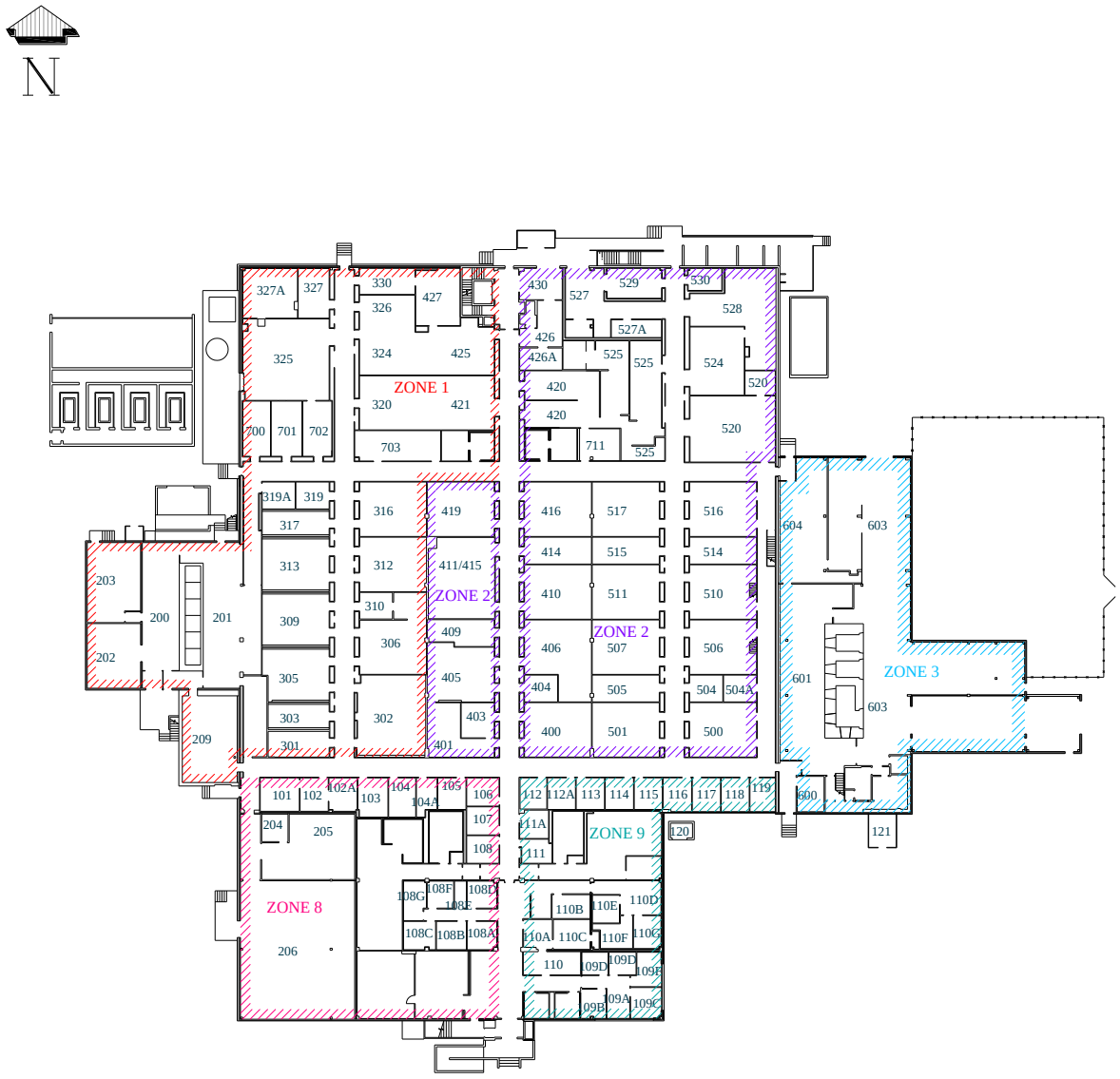

325 First Floor

ZONE WARDEN MAP

REL. 5/10

Shauna Anderson * Engineering & Design Services

Attachment 5 – Zone Warden Areas – 2nd & 3rd Floors

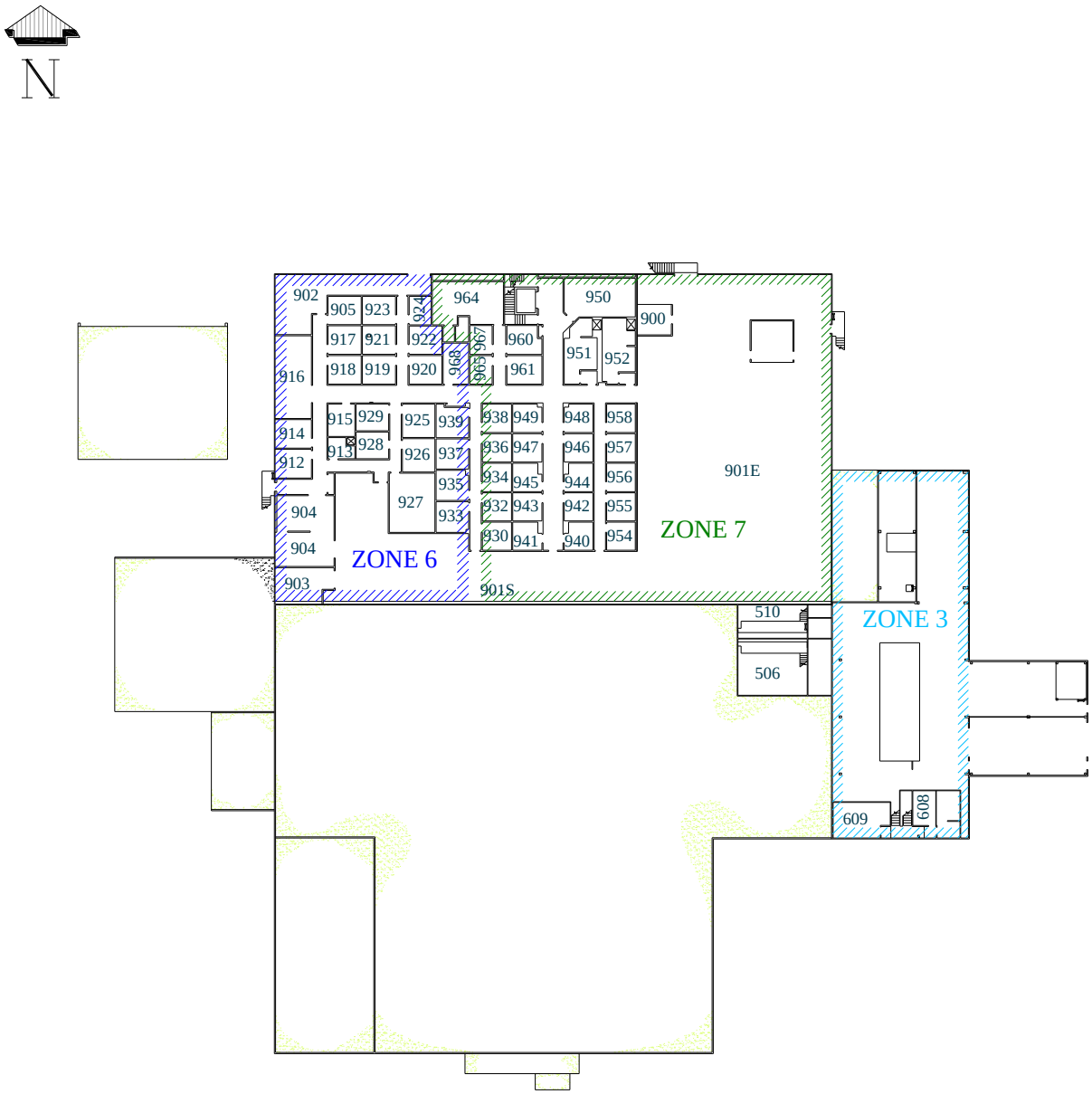

325 Second Floor

ZONE WARDEN MAP

REL. 5/10

Shauna Anderson * Engineering & Design Services

Attachment 6 – Zone Warden Areas – Mezzanine & Basement

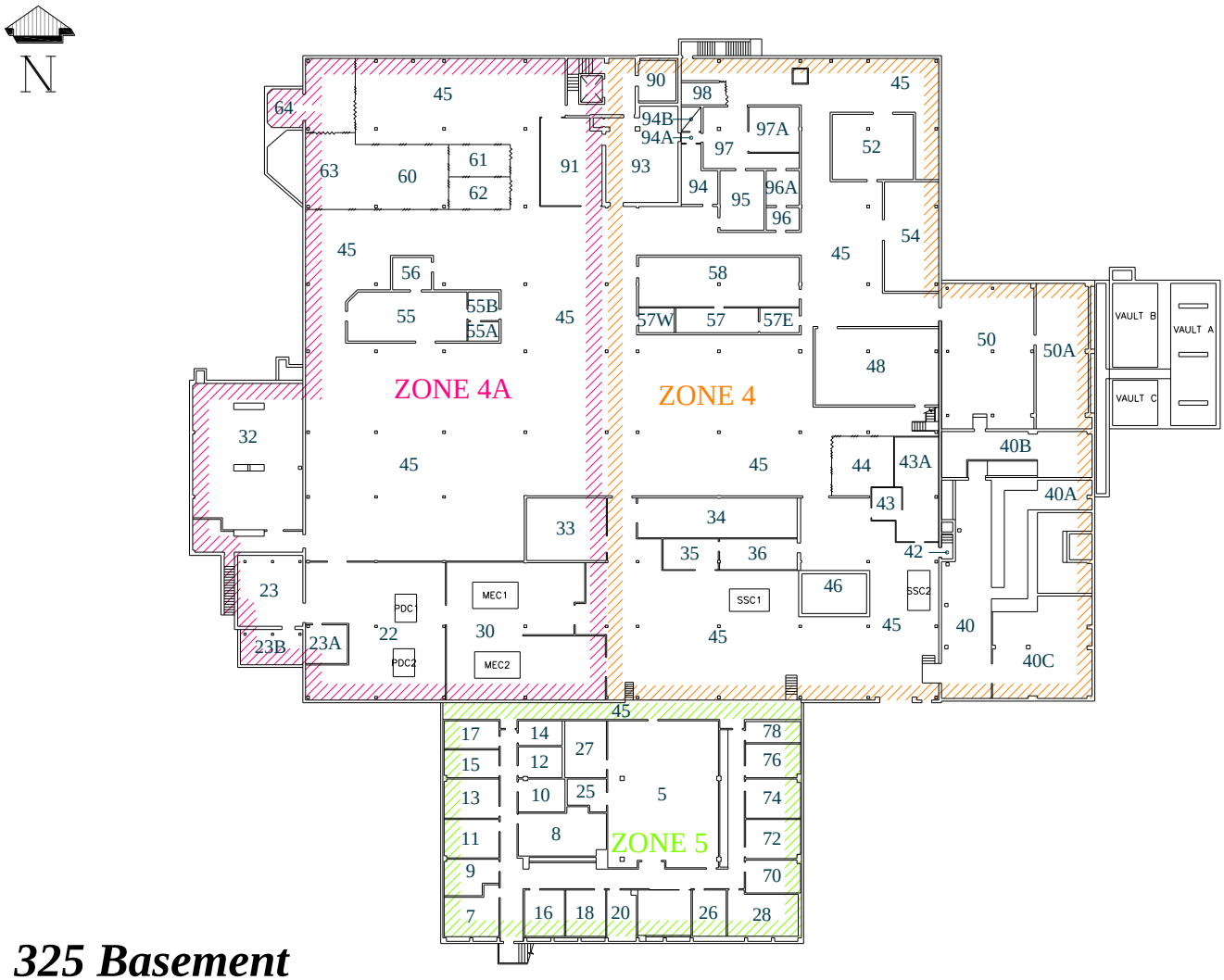

325 Basement

ZONE WARDEN MAP

REV. 5/10

Shauna Anderson * Engineering & Design Services

Attachment 7 – RPL Staging Area Map

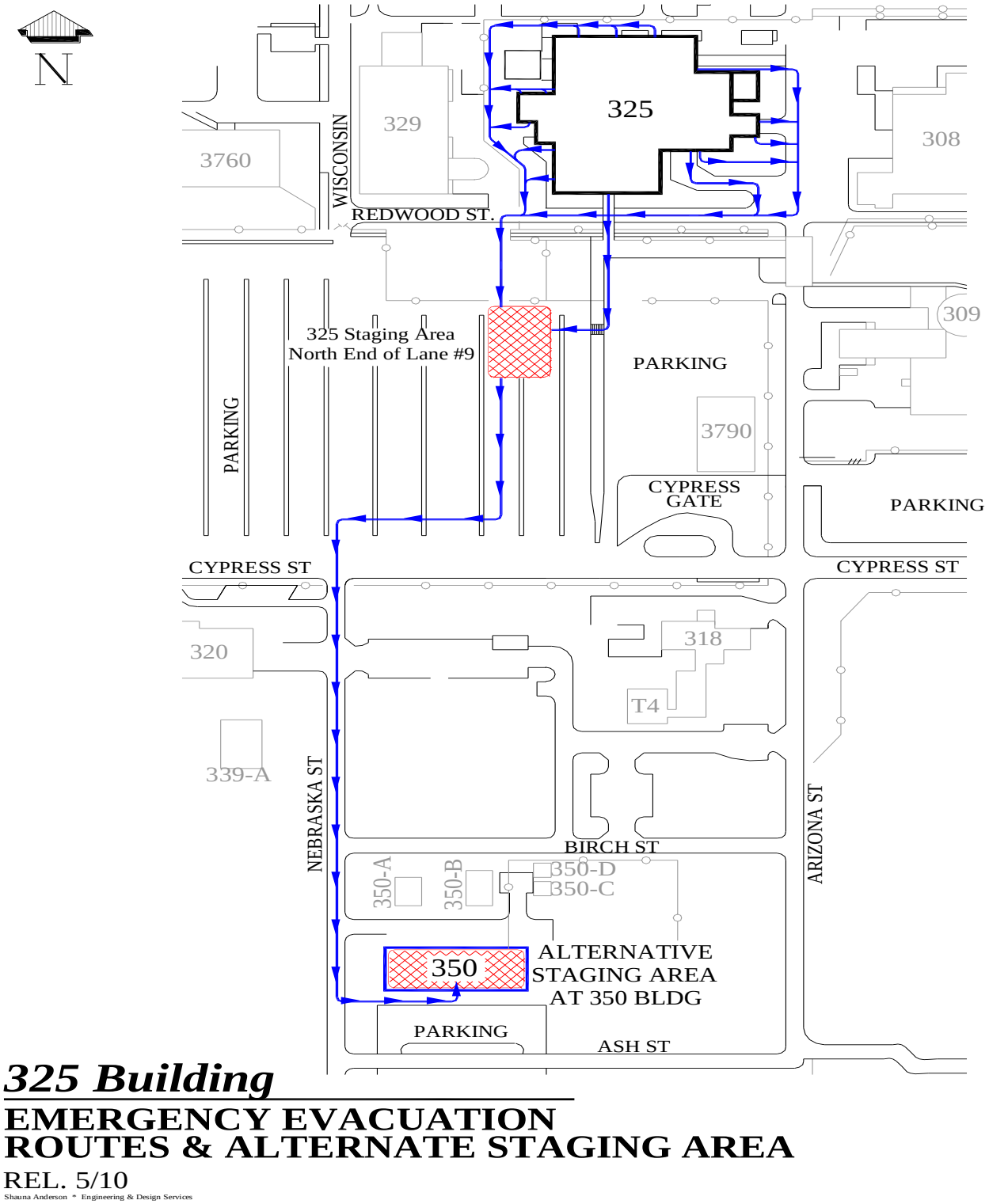

325 Building

EMERGENCY EVACUATION ROUTES & ALTERNATE STAGING AREA

REL. 5/10

Shauna Anderson * Engineering & Design Services

Attachment 8 – Location of RPL in the 300 Area

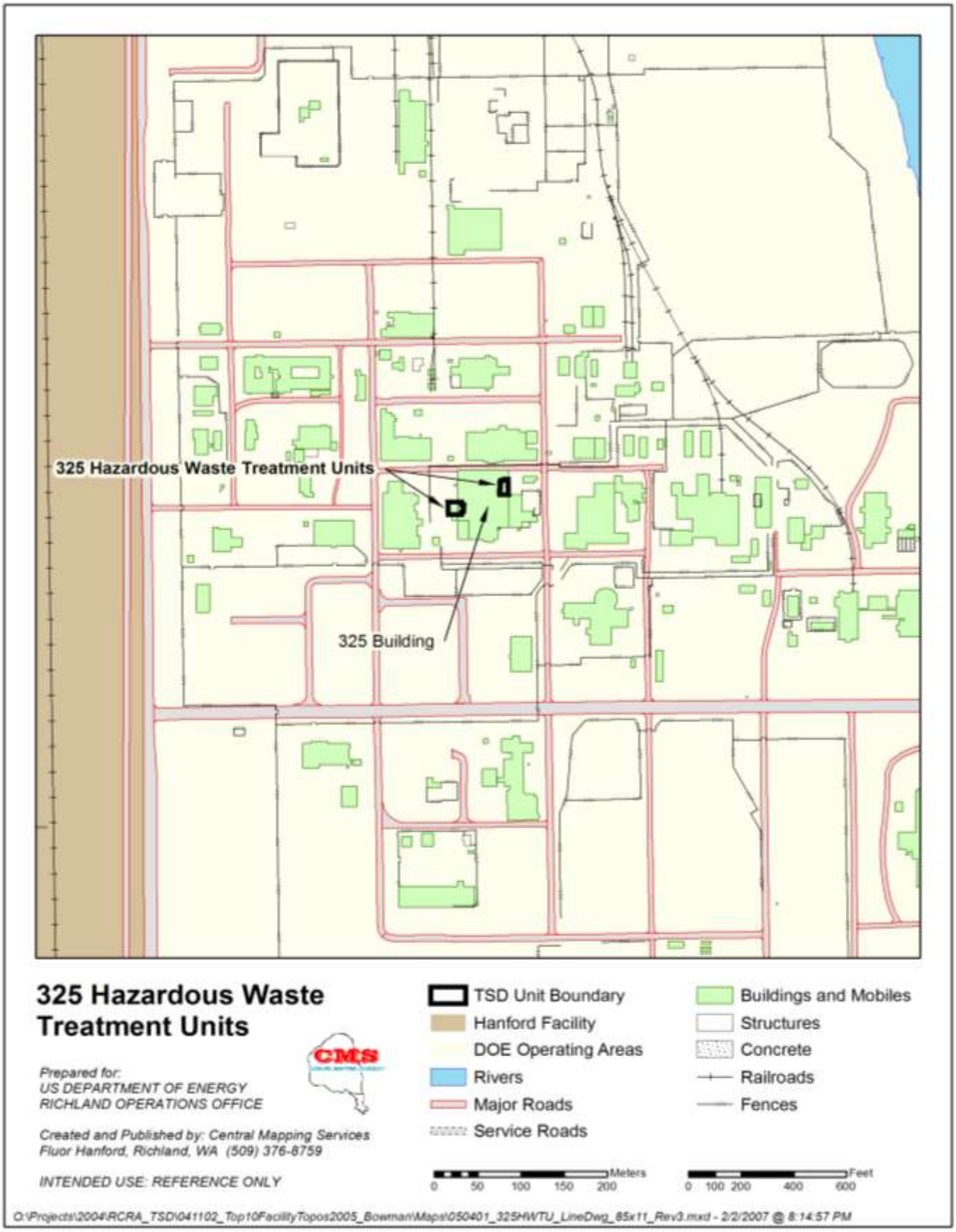

14.0 References and Source Requirements

ADM-001, *Document Production and Distribution*

ADM-EPIP-7.0, *PNNL Incident Command System and Incident Response*

ADM-EPIP-7.2, *Management Support Group*

DOE-0223, *RL Emergency Implementing Procedures – Applicable to PNNL-Managed Facilities on the Hanford Site*

DOE/RL-94-02, *Hanford Emergency Response Plan – Applicable to PNNL Managed Facilities and Activities on the Hanford Site*

HDI, *Emergency Preparedness*

HDI, *Injury or Illness*

HDI, *Responding to Spills, Exposure Incidents, or Material Loss*

HDI, *Workplace Substance Abuse*

PNNL-DSA-325, *Radiochemical Processing Laboratory Documented Safety Analysis*

PNNL-EAL-RPL, *Emergency Action Level Tables for the RPL*

PNNL-MA-110, *PNNL Emergency Management Plan*

RCP-8.1.02, *Quick Sort Survey of Personnel*

14.1 Emergency Preparedness Checklists

14.1a BED Hazardous Material Facilities (RPL) Checklist

14.1b Chemical Hazard Assessors Checklist

14.1c Event Closeout Form

14.1d Facility Operations Specialist (FOS) Checklist

14.1e Hazards Communicator Checklist

14.1f Incident Command Post Communicator Checklist

14.1g Incident Manager Checklist

14.1h Radiological Hazard Assessors Checklist

14.1i RPL Staging Area Supervisor Checklist

14.1j PNNL Emergency Evacuation Report Form

Procedure Revision History

Date	Rev. #	Description
4/01/03	0	• Revised and edited for annual update, including insertion of history page.
7/30/03	0	• Made the following name changes to the RPL BEP and distributed changes to all holders of controlled copies: 1. In Exhibit 12.1 on page 52 change the MSG Lead 1st and 2nd alternates to Larry Maples and Reed Sharp respectively. 2. Change the primary warden for Zone 4 to Todd Haynie, 372-3067. 3. Change the secondary warden for zone 4A to Todd Haynie, 372-3067. 4. In Table 14.a on page 59, change the 90-Day Storage Emergency Contact to Raymond D. Bell, Work Phone: 376-2321, Cell Phone: 521-4505.
9/03/03	0	Replaced Larry Page with Tracy Eaton on pages 52 and 57.
9/11/03	0	Replaced Shane Loper with Greg Varljen as Secondary Zone Warden for Zone 4 and Primary Zone Warden for Zone 4A on pages 56 and 57.
9/30/03	0	Insert Maria Olivarez as the 1st Alternate for Assisting Communicator and the ICP Recorder in Exhibit 12.1. (sma)
11/17/03	0	Change William Buyers' cellular telephone number to his current number. (sma)
11/21/03	0	Replaced Katherine Carson with Darlene Winter as Primary Zone Warden and replaced Tracy Eaton with Katherine Carson as Secondary Zone Warden for Zone 7 on page 57. (sma)
3/30/04	0	Annual BEP update (nem-m)
5/6/04	0	Update Evacuation Routes – 2nd and 3rd Floors map, correction of room numbers. (sma)
7/7/04	0	Made the following change to section 9.2.1 Emergency Decontamination Facilities: The RPL Facility Personnel Decontamination Room is located in Room 606 has only limited decontamination capability (a small sink). Radiological Control Personnel are the only staff that may perform Personnel Decontamination. The decontamination shower in this room is out of service. If an evacuation of the RPL Facility occurs and re-entry is not possible to decontaminate affected personnel, Radiological Control Supervision may use the 329 Building Personnel Decontamination Facility. In the event that affected personnel are injured, they should be transported directly to Kadlec Medical Center. If large group decontamination facilities are required, request assistance from the Hanford Fire Department Mobile Decontamination Facility. (lef)
8/11/04	0	• Replace Tracy Eaton with Jason Armstrong as ICP Hazards Communicator. • Remove Stan Jones as BED and ICP Communicator Alternates. Also on Exhibit 12.2.1. • Remove Teresa Schlotman as the Primary SAS and move the alternates up one step. • Put Andrea Kwiecinski in as Primary ICP recorder and move Bob and Maria to alternates. • Remove Abby Nicholson and Scott Nickerson as ICP Chemical Hazards Assessor alternates. • On Exhibit 12.2.4, Change "RPL Facility Project Manger" to "Nuclear Work Team Leader" and add Environmental Compliance Rep. as John Holland in the Waste Management block. • Replace Wayne Larson as TSD POC (Table 14.a) and replace with Ron Del Mar. (lef)
8/25/04	0	Fix name spelling of Andrea "Kwiecinski" as ICP Recorder (lef)
9/28/04	0	• Made the following name changes to the RPL BEP and EIPs: • Change assisting Communicator to Maria Olivarez, remove alternates

Date	Rev. #	Description
		• Change ICP Chemical Hazards Assessor to Kevin Sheffield. • Change ICP Communicator to Holly Black-Kania. • Change MSG Recorder (1st Alternate) to Mary Bradshaw. • Zone Warden changes: Zone 4A primary to Matthew Fountain; Zone 6 Secondary: Joyce McGuffey : Zone 7 Primary : Gregg Lumetta, Secondary : Clark Lindenmeier : Zone 9 Secondary ; Paul Bredt : Move the North Dock/Cylinder Storage Area from Zone 2 to Zone 7. • Staging Area Supervisor; Move Bob Schumacher to 2nd Alternate and put Debra Coffey as the 1st Alternate. • Throughout document, change PNNL SPC or PNNL Single Point Contact to PNNL Operations Center. • Change RPL Facilities Project Manager to Nuclear Work Team Leader. • Change RPL Building Ventilation & Power Operations Supervisor to Utility Operations Work Team Leader.
10/19/04	0	Remove 43, 45, 63, 517, and 601 from the list of 90-day waste accumulation sites from the second paragraph in section 3.6 on the bottom of page 16. Also change the 1st Alternate MSG Recorder to Laura Fuher. (lef)
11/01/04	0	Replace HEHF with new Hanford medical contractor AMH. Update ICP Hazards Assessor: 1-Todd Haynie, #2- Kevin Sheffield (lef)
3/21/05	1	2005 Annual Update: 1. Standardized appearance of the word AH-OO-GAH throughout the BEP. 2. Section 2. Added Acronyms section. 3. Section 3.1.1, added information on preservation of evidence to BED responsibilities. Added Testing Designated Position (TDP) requirement to BED position responsibilities. 4. Section 3.2.1, added TDP requirement to the ICP position responsibilities. 5. Section 3.2.8, added TDP requirement to the MSG Lead position responsibilities. 6. Section 3.2.5, Created new description for MSG Liaison duties. Renumbered remaining sections in chapter. 7. Section 3.2.8, added the words criticality alarms in zone warden indication of hazards. 8. Section 3.2.9, added TDP requirement to the FOS position responsibilities. 9. Section 3.3, Individual Staff Responsibilities, added information regarding discarding PPE on building evacuations and PCM use for fire/criticality. 10. Sections 5.5 Criticality, added editorial comment. 11. Section 6.1.1, item 3, added "If the RPL has a loss of electrical power and Standby Power is still available, assemble in the Lunch Room. Personnel exiting Radiological Buffer Areas do so without surveying through the PCMs. If personnel are wearing Personal Protective Equipment (PPE) clothing, are suspected of being contaminated, or have exited a Radiological Buffer Area, isolate them from other building occupants and request they be surveyed by Radiological Control Personnel. a. Refer to Section 6.1.11 for Reduced Ventilation Flows. 12. Section 6.1.10, Criticality, removed the last sentence from item 3, bullet 1. 13. Section 6.1.10 new item 3: Personnel exiting Radiological Buffer Areas do so without surveying through the PCMs. If personnel are wearing Personal Protective Equipment (PPE) clothing, are suspected of being contaminated, or have exited a Radiological Buffer Area, isolate them from other building occupants and request they be surveyed by Radiological Control Personnel. 14. Section 6.3 Natural Phenomena, to each event added the words "If evacuating the facility, have 375-2400 report the evacuation to the ONC (376-2900)." 15. Section 8. Utility Disconnects: Added information on the Ramp Sump Pump local disconnect location. 16. Exhibit 12.1, Updated BERO members. Added new position of MSG Liaison 17. Section 12.2.1, Updated BED name (David Clark) and phone numbers. Added Bill

Date	Rev. #	Description
		Buyers contact info as 2nd alternate BED. Added and * to TDP positions with the note to coordinate changes in these positions with the TDP Administrator. 18. Section 12.2.4, Added MSG Contact name and phone number to the emergency contact list. 19. Exhibit 12.4, BED Checklist – a. Step 1, added requests for Hanford Fire department and Hanford Patrol for certain events. RLEP 1.1, Checklist 3.1 consistency. b. Step 2, added additional equipment to note regarding building evacuation due to bomb threats. RLEP 1.1, Checklist 3.1 consistency. c. Step 2, added new bullet regarding actions for evacuation while under a take cover. RLEP 1.1, Checklist 3.1 consistency. d. Step 6, added info regarding transportation events and event classification. Also added box with RCRA criteria. RLEP 1.1, Checklist 3.1 consistency. e. Step 8, minor wording change. RLEP 1.1, Checklist 3.1 consistency. f. Step 12 (new) regarding preservation of evidence at event scene. RLEP 1.1, Checklist 3.1 and MA-110, Exhibit A.16 consistency. g. Renumbered all steps after 12. 20. Exhibit 12.5, ICP Communicator Checklist- a. Inserted new step 5, related to actions required if event does NOT reach EAL criteria. PNNL-MA-110, Exhibit A.17 consistency. b. Renumbered remaining steps. c. Step 15, editorial change coy to copy. 21. Exhibit 12.6, ICP Hazard Assessor Checklist a. Step 3, minor editorial change, RLEP 1.1, Checklist 3.9 consistency. b. Step 8, minor editorial change, RLEP 1.1, Checklist 3.9 consistency. c. Part 2, Step 8, added not regarding decision to transport injured and contaminated personnel. RLEP 1.1, Checklist 3.9 consistency. 22. Exhibit 12.7, Staging Area Supervisor Checklist- a. Step 2, Revised Warning regarding use of additional electronic equipment in bomb threats. RLEP 1.1, Checklist 3.11 consistency b. Added new step 7 to query staff regarding medications or medical conditions of which the BED needs to be made aware. Renumbered remaining steps. Change requested by SAS. c. Added new step to remind SAS to have RHA confirm habitability of staging area and ICP. 23. Exhibit 12.10, MSG Checklist a. Added a step to have the MSG Liaison get safe route of travel and be dispatched to ICP. b. Added new step for notifying BMI.(Their emergency number is (614) 424-4444) c. Added new step related to preservation of evidence. 24. Exhibit 12.11, Facility Operation Specialist Checklist a. Step 2, added statement to remind FOS to communicate location of event scene operations to the BED. RLEP 1.1, Checklist 3.13 consistency. 25. Exhibit 12.13, ICP Hazard Communicator checklist- a. Step 2 and 3, added shading to text boxes. RLEP 1.1, Checklist 3.10 consistency. b. Added new step 5 to provide PNNL exposure evaluator number for the hazard communicator if needed. 26. Exhibits 13.5, 6, 7 added new emergency equipment maps from the MIT. 27. Exhibit 14.a, 300 Area Protective Actions, revised table per RLEP 1.1, Appendix C,

Date	Rev. #	Description
		added 300 Area offsite Protective Actions & Recommendations. (nmm/lef)
4/15/05	1	Fixed page numbering to start at page 2 on second page. Updated Bill Buyers phone number to 376-5612, and changed Jeff Rencken as Facility Operations Specialist and Zone warden to Ed Arel. lef
6/13/05	1	Updated BERO contact names & numbers on pages 54-55, changed the MSG Support Lead to Mike Moran on page 62. (lef)
8/22/05	1	Updated ICP Hazards Communicator- Primary/Jack Horne and Alternate/Lindsay Nelson. Updated ICP Hazard Assessor/Radiological – Primary/Bob Free and Alternate/Jack Horne. Updated Zone Wardens: Zone 4A Alternate – Don Kelly; Zone 7 Alternate – Mike Lindberg; and Zone 9 Primary – Lewis Hogan. On page 49, section 9.2.2, added Note: Only Rad Worker 2 trained staff are allowed to volunteer for receiving emergency radiological exposures. lef
9/9/05	1	On page 60, replaced Todd Haynie as Zone Warden for Zone 4A and Industrial Hygiene/Occupational Safety with Don Kelly on page 62, and added Don's cell phone. lef
9/13/05	1	Updated Rad Hazards Assessors to Lindsay Nelsen (primary) and Rob Sitsler (secondary) and Hazards Communicators Jack Horne (primary), Holly Black-Kania (1st Alternate) and Forrest Bronson (2nd Alternate). lef
9/26/05	1	Updated the "300 Area Protective Actions" section 14.1 per TL Bettendorf "the RLEP has changed". Added Table of Contents. Fixed spelling error for Deborah Coffey, SAS Secondary. lef
11/7/05	1	Page 36 - Updated Section 6.1.8 #2a,per TL Bettendorf: • Move personnel from affected area to a safe location. • If the health and safety of the building occupants is such that a building evacuation is necessary, pull the fire alarm. • Notify the PNNL Operations Center at 375-2400. • Notify the Safety and Health Representative. Page 64, Section 12.2.4, Table 14.a per DE Clark: • New 90-day Storage Area SFO: Greg Varljen; • New 90-Day Storage Non-SFO Mark Vucelick. (lef)
2/2006	2006	• Reformatted per F&O guidelines. • Added Cindy Caldwell as Safety & Health approval signature. • Clarified the acronyms throughout the document. • Updated SPC to PNNL Operations Center throughout the BEP. • Section 1.6, added a building specific alarm for Hot cell DP at Randy Thornhill and Randy Scheele's request to standardize HLRF response procedures. • Replaced DOE-RL throughout the document with DOE. • Section 3.2.8, clarified that responses apply to ZW alternates also. • Section 3.3, Clarified where individuals can find the electronic copy of the RPL BEP. • Section 6.1.5.1, added a bullet regarding need to notify the Environmental Support Contact to perform appropriate notifications to the Department of Ecology for a major tank spill. • Section 6.1.9, added clarification that various alarms may occur on Radiological Material Release. • Section 6.3, editorial change. • Section 6.4.2 "Hostage Situation/Armed Intruder/Violence in the Workplace" added information based on drills from violence in the workplace. • Section 7.5, corrected location of the air compressor isolation valve. • Section 7.9, corrected location of the local disconnect switch for RPL ramp sump pump. • Section 8.2. Added clarification for the need to notify the Dept of Ecology within 30 days after an incident involving a release from a tank system to the environment that does not result in an activation of the contingency plan. • Attachment 13.1, update BERO listing to new members.

Date	Rev. #	Description
		• Attachment 13.1, updated BED (Francis Buck), 1st Alt BED (Bill Buyers), 2nd Alternate N/A. • Attachment 13.1, updated ICP Communicator adding Karla Smith as Primary Responder; Robert Schumacher as 1st Alternate and Francis Buck as 2nd Alternate. • Attachment 13.5, updated names for ZW assignments. • Attachment 13.6, New Staging Area Supervisor- Deborah Coffey, 1st Alternate- Karla Smith, 2nd Alternate-N/A. • Attachment 13.7, added the secondary phone line number for the PNNL Operations Center. • Exhibit 13.13 – Handling of Radiologically Contaminated/Deceased Worker Checklist, added a step to verify the appropriate DOE Facility Representative has been notified. (nmm) • Added Zone Warden Area maps and updated other building MIT maps. • SES: RPL-2006-021D. FG Buck. (lef)
4/25/06	2006	○ Update FG Buck cell phone: 528-0141 and WT Buyers cell phone 521-0217. ○ Page 65; Deleted Forrest Bronson as ICP Hazards Communicator. Replaced Jack Horne/ICP Hazards Assessor (Radiological)/Primary with Bob Free. Jack Horne is now 1st Alternate and Holly Black-Kania is 2nd Alternate. ○ Page 65: ICP Hazards Communicator: Lindsay Nelson/Primary and Rob Sitsler/1st Alternate. ○ Replaced MSG Checklist with current checklist from the EP Office, per TL Bettendorf. (lef) CE: RPL-2004-194D. USQE FG Buck.
8/10/06	2006	• Update 1st Alternate BED to Sanjay Sanan. • Deleted home phone number for Lori Ashbeck • Updated Management Support Group Contact: RD Sharp(lef) CE: RPL-2004-194D. USQE/FG Buck.
10/24/06	2006	• Fixed spelling and grammar errors, web link errors, Attachment numbers, and font sizes throughout document. • Attachment 13.1 – New Assisting Communicator #1 – Lori Ashbeck. New ICP Hazards Communicators: 1- Jack Horne, 2 – Bob Free, and 3 – Rob Sitsler. New ICP Hazards Assessors – 1- Bob Free, 2- Jack Horne, and 3- Holly Black-Kania. • Attachment 13.7 - New MSG Contact – Reed Sharp. • CE: RPL-2004-194D. FG Buck/USQE 10/24/06
1/10/07	2006	Updates to the BERO staff, Waste Management, and Communicators are as follows: *Primary: Assisting Communicator: Lori Arel (W:376-3611, H:734-1574)* *2nd Alternate ICP Hazards Communicator: Terry Milham (Work: 376-0700)* *1st Alternate ICP Recorder: Lori Arel (W: 376-3611, H: 734-1574)* *Zone 4A Primary: Ron Del Mar (376-2822)* *Zone 5 Primary: Lewis Hogan (372-1427)* *Zone 8: Secondary: John Logan (376-1382)* *Zone 9: Primary: John Logan (376-1382)* *1st Alternate Staging Area Supervisor: Jeff Andrie (376-0502)* *2nd Alternate Staging Area Supervisor: Teresa Schlotman (376-3206)* *Under Waste Management: Remove Greg Varljen, Add Ron Del Mar (W:376-2822, C: 530-8308)* CE: RPL-2004-194D. FG Buck/USQE
2/5/07	2007-1	Annual BEP Update: • Pg. 5, editorial correction, second paragraph, "whose" • Pg. 9, deleted last sentence in paragraph 1.7. Incorrect statement. • Throughout the BEP deleted specific section reference number to PNNL-MA-110. MA-110 has been revised and all the references are now out of date. Removing section references will allow changes to be made to PNNL-MA-110 without requiring BEP

Date	Rev. #	Description
		revision. (pgs, 12, 21, 46 • Pg 14, added a responsibility to the BED Section 3.1 for planning conducting and documenting emergency drills per MA 110 requirements. • Pg 41, updated the step 2 of the Bomb Threat actions per RLEP 1.1 • Pg 48, Section 9.1 first bullet, revised wording related to location of Class D fire extinguishers if reactive metals are present. • Pg 63, Updated drawing to show building removals and be consistent with TSD maps. • PG 65, new Alternate Assisting Communicator and Primary ICP Recorder- Terri Mars. 2nd Alternate ICP Hazards Communicator: Woody Buckner. 1st Alt Staging Area Supervisor- Juai Jao and 2nd Alternate – Karl Pool. • Pg 72, replaced Terri Mars/TSD contact with JK Larsen. • Pg 73, Nuclear Work Team Leader cell phone correction 521-6072 and deleted the pager. • Throughout all the checklists, revised RL to Hanford as appropriate. RLEP's refer to everything as Hanford vs. RL now. (e.g., RL Notification Form is now the Hanford Emergency Notification form.) • Pg 79, BED Checklist step 19, revised wording for personnel health advocate notification per RLEP 1.1, and corrected attachment number to 13.13. • Pg 79, Step 20, added IC or the Liaison Officer, RLEP 1.1 consistency and correct attachment number 13.13. • Pg 79, Step 23, corrected attachment number to 13.18, relocated the note regarding event closeout to step 23. • Pg 81, ICP Communicator Checklist, step 3, revised Hazard Assessors to Hazard Communicator, RLEP 1.1 consistency. • Pg 81, ICP Communicator Checklist, reformatted sub step to A. • Pg 84, Attachment 13.10 Removed ICP from Hazard Assessors checklist title. RLEP 1.1 consistency. • Pg 88, SAS Checklist, editorial change to note in step 2. • Pg 88, Step 4 added note regarding injured personnel. RPL Drill Security 07-02 corrective action. • Pg 91, Attachment 13.13, editorial change, RLEP consistency. • Pg 96, Deleted duplicate steps from the MSG checklist. • Pg 98, FOS checklist, minor editorial change step 1 & 2, RLEP consistency. Added note regarding injured personnel. RPL Drill Security 07-02 corrective action. • Pg 100, ICP Hazard Communicator checklist. Added several bullets for RLEP consistency. (NMM/lef) CAT EX: RPL-2004-194D. FG Buck/USQE.
8/6/07	2007	• Section 1.3, replaced RSEG ownership of the RPL with the Director of Nuclear Operations as senior line manager. • Updated Alternate ICP Communicator, Primary Responder/Chemical Assessor, 1st Alternate Staging Area Supervisor, and 2nd Alternate Staging Area Supervisor, and changed Zones 4 and 4A Zone Wardens per L. Arel. (lef) • CE: RPL-2004-194D. FG Buck/USQE
9/17/07	2007	• Page 65, change title of MSG Lead to MSG Liaison per RPL Bldg Managers office. (lef) • CE: RPL-2004-194D, FG Buck/USQE.
10/29/07	2007	• Replaced Francis Buck with Dan Wandler as BED per BM Durst. • New ICP Communicator 1st Alt: John Logan; ICP Communicator 2nd Alt- NONE. • New FOS 1st Alt: Dan Wandler and no FOS 2nd Alt. • CE: RPL-2004-194D DGW/USQE
11/10/07	2007-2	Major revision consisting of: • New signature page/approvers per LO Casazza. • Section 1.3, revised Owner/Operator to the new NOD organization manager. • Section 1.6, Deleted the word "High" from Glove Box Differential Pressure Alarm (Signal) box • Section 2.3, added references to aDM-001, Document Production & Distribution for

Date	Rev. #	Description
		making minor and major revisions to this procedure. • Section 6.1.11, added new 3rd bullet "Zone Wardens for Zone 2 and Zone 8, activate flashing red warning lights. • Section 6.4.4, added new 3rd bullet: "Zone Wardens for Zone 2 and Zone 8 activate flashing red warning lights." • Attachment 13.11, Deleted #5: Verify that the Zone 2 and Zone 8 Zone Wardens turned on the flashing red access warning lights identified in the Zone Warden Checklist"; renumbered remaining items in the checklist. • Attachment 13.12, #1, added "In the event of Reduced Ventilation or Take Cover…" • New BERO staff assignments: 1st Alternate Assisting Communicator: Bob Schumacher; 1st Alternate Facility Operations Specialist; John Logan. • New Zone Warden assignments: Zone 8 Secondary and Zone 9 Primary: Bob Schumacher. (lla/lef) • CE: RPL-2004-194D. DGW
6/13/2008	2008	• Annual review. • Replaced the following checklists from PNL-MA-110: Attachment 13.10, Hazards Assessors; Attachment 13.15, Facility Operations Specialist; Attachment 13.17, ICP Hazards Communicator; and Attachment 13.14, MSG Checklist. Deleted Attachment 13.16, Hanford Emergency Notification Form. • Updated phone numbers for members of the BERO; Attachments 13.1, 13.5, and 13.7. (lef) • RPL-2008-120S. DGW
9/25/08	2008	• Updated signature page with new BED, NOD, and FSR signatures. • Multiple updates to the RPL BERO staff list. • Added PNNL Communicator Notification System to section 1.5. • Updated fire signal n Section 1.5 from gong/electric chime to Slow Whoop followed by voice message. (DGW/lef) • CE: RPL-2004-194D. DGW 9/16/08.
12/1/08	2008	• Replaced crash alarm system with the Telephone Notification System (TNS) and the Communicator Notification System (CNS) as appropriate. • Deleted crash alarm phone location on Attachment 12.5. • Updated maps from MIT. • Changed location of the ICP from 3760 bldg to 350 bldg and added new fax number for the 350 bldg ICP. • SES: RPL-2008-231S DGW/USQE
12/11/08	2008	• Section 1.0, updated WAC [WAC 173-303-350 (3)(d)] per HT Tilden. • Updated location of ICP in 350 building to Room 131. (cak) • Moved Section 6.10 Facility Take Cover to Section 7.0 for consistency throughout ALL BEPs and renumbered all subsequent sections and attachments as appropriate. • Updated BED checklist, #7: Brief hazard assessors and FOS on event and if practical deploy them to the event scene as soon as possible. • Updated BED Checklist #15, added new NOTE: If the location of the ICP has or will be changed call 375-2400 and assure the POC will be made aware of its new location. (lef/TLB) CE: RPL-2008-087D. USQE/DG Wandler 1/7/09.
1/15/09	2008	• Attachment 14.7, Added EOC phone numbers for 350 building: 372-0727, 372-0801 and fax 372-0723. (lef) CE: RPL-2008-087D. DGW/USQE 1/15/09

Date	Rev. #	Description
6/10/09	2009	DSA Update and BERO staff changes: Approval changes: new Waste Operations signature: K McDowell • New Section 1.7 , "Deviations from Technical Safety Requirements" • Section 3.6: Deleted 90-day storage areas in rooms 44, 61, 603, and the East Storage Yard and added the Shielded Analytical Laboratory (SAL) Hot Cells as a new 90-day storage area. • Section 6.4 – moved NOTE from the top of Section 6.4 to the end of subsection 6.4.1.2: *If local audible alarm actuates as a result of a transient condition associated with a known work condition, then it is acceptable (as applicable) to attempt to manually reset the alarm or wait 10 seconds for the alarm to automatically reset before taking emergency actions. If the alarm lasts longer than 10 seconds or the direct cause of the alarm is unknown, then immediately perform emergency actions.* • Section 9.2.1: Added 326 Building to the list of emergency decontamination facilities. • Section 12.2: The Emergency Action Levels (EALs) are considered Official Use Only (OUO) information have have been removed from the server, therefore, the EALs statement has been revised removing the weblink and directing staff to obtain copies of the EALs for RPL from the RPL Building Manager. • Attachments 13.5 and 13.7 – updated building maps identifying new locations of the 90-day storage areas. • Attachment 14.0 – per Emergency Preparedness office: deleted Management Support Group Checklist (old Attachment 14.14) – (this checklist is now a standalone procedure; see ADM-EPIP-7.2). Renumbered remaining Attachments in Attachment 14 – 14.14 is now Facility Operations Specialist – Checklisted Duties; 14.15 is Incident Command Post Hazards Communicator Checklisted Duties, and Attachment 14.16 is Emergency Closeout Checklisted Duties. • Attachment 14.1: New BED2 – Skip Kerschner. New ICP Communicators 1- Tony DeGuia, 2- Teresa Campbell, 3- Isadore Henderson. New Assisting Communicator: Kathy Rightmire. New Chemical Assessors: Kevin Sheffield and Abby Nicholson. ICP Hazards Communicator cell phone update • Attachment 14.4 : New BED2 HF Kerschner • Attachment 14.5: Rearranged the attachment to list the zone areas on top of the zone warden assignments. New Zone Wardens: Zone 2 Secondary - Jim Larsen; Zone 3 Secondary - Tim Smith; Zone 5 Primary – Lanson Oukrop; Zone 8 Primary – Jamin Trevino; Zone 9 Secondary – Kristie Lombardo. Attachment 14.7: New Safety & Health Rep: Kevin Sheffield. New Waste Management TSD contact: Kip McDowell. • Updated Staging Area Map. • Attachment 14.16: Per the Emergency Preparedness office, reorganized table for better flow of information. (NMM/CAK/lef)
6/10/09	2009	Replaced 3 Emergency checklists per the Emergency Preparedness office: Attachment 14.4 – Facility Operations Specialist (FOS) Checklist, Attachment 14.8 – BED Hazardous Material Facilities (RPL) Checklist, and Attachment 14.16, (renamed) Event Closeout Form. (lef) USQ: RPL-200
6/15/09	2009	Attachment 14.1, Per the Emergency Preparedness Office and the Department of Ecology, added "Environmental Support Contact" (regulatory notifications only) and the PNNL Operations Center phone number 375-2400. (lef) CX: RPL-2008-087D
1/11/10	2009	Updated names and points of contact management personnel for the BERO. Deleted information Note regarding audible glove box alarms. (kl) Updated Hanford Patrol Operations Center phone number from 373-3800 to 373-0911 per EP Office. (lef)
5/24/10	2010	Updated the 350 Bldg alternate ICP room number. Replaced references for SBMS with HDI. Added steps to fight fires in hot cells and gloveboxes. Updates to criticality alarm tests are now semiannual, not quarterly. Added alpha sentry cams to potential alarms. Updated emergency decontamination facility information. Corrected the location of the compressed

Date	Rev. #	Description
		air isolation. Added paging system information. Updated names and points of contact for BERO and standardized emergency telephone number list with the rest of the BEPs. Moved the emergency contacts to section 3.0 and added EOC Tech Reps Patello, Thornhill, and Steen. Section 4.1, added Mike Zabel as Primary Chemical Assessor, Doug Falk as 1st Alternate and Abby Nicholson as 2nd Alternate. Deleted zone warden list, moving it to RBAC. New Section 15.0 which lists all referenced documents and weblinks for emergency preparedness checklists. Section 4.1 – deleted MSG Recorder, Barb Ekstrom per EP Office. Per Environmental Managements' request, section 11.4 has been revised to list the items in the spill kits. Section 8.1.2.2, Facility Take Cover event –inside RPL, added: Staff should refrain from eating and drinking during a take cover event if physically able, until an appropriate evaluation of the event can be made. (cak/tlb/lef)
10/20/10	2010	• Added the following Note in sections 6.1.1, 6.1.2, 6.2, 6.2.2, 6.2.3, 7.4, 6.5, 6.7, 6.8 and added it as a step in 6.9.2: If appropriate, classify the event using the RPL EALs. • Updated first floor and basement emergency equipment maps. • Merged Sections 3.0, Emergency Telephone Numbers and Section 4.0 Building Emergency Response Organization into one section/Section 3.0, Building Emergency Response Organization and adjusted section reference numbers throughout the document. • Replaced Kip McDowell with KM McDonald as Low Level TSD contact. • Deleted room 32 as TSD in section 3.19. (tlb/cak/lef)
4/7/2011	2011	• Updated emergency equipment and evacuation route maps. • Updated phone numbers due to VOIP system installation • Changed location of the decon shower to 3410. • Updated locations of TSDs and 90-day storage areas per EL Grohs. • Updated name for AMH to CSC Hanford Occupational Health Services (CSC HOHS). • Updated S&H Rep from D. Falk to M. Zabel. (cak/lef)
6/17/2011	2011a	Update section 1.7 in accordance with revised wording in TSR AC 5.11. Added clarification notes in sections 6.1.1.4 and 10.2 that fire extinguishers with glove piercing tips are for HFD use only. (tac)
8/15/11	2011b	Updated BERO staff listing. Added 373-0911 to be dialed from cell phones and added Note about Becquerel conversion to dpm in Section 6.4. (CAK/lef)

Approval History for: BEP-325/RPL_R2011b, Building Emergency Procedure for RPL

Final Process State: APPROVED

Name	Activity Name	Date
✔ Bettendorf, Timm L	Review Concurrence 1	8/16/2011 1:47:46 PM
✔ Kooiker, Curt	Review Approval 1	8/16/2011 2:24:51 PM
✔ Campbell, Teresa A	Independent Review Chair Screener Approval	8/17/2011 8:10:18 AM

*** All actions are stored digitally and viewable at https://approvals.pnl.gov/ProcessView.aspx?pid=735615**

Hanford Facility RCRA Permit Modification Notification Forms

Part III, Operating Unit 10
Waste Treatment and Immobilization Plant (WTP)

PCNs for quarter ending September 30, 2011:

PCN Number	Form Approval Date	Facility
24590-HLW-PCN-ENV-08-004	07-28-11	HLW
24590-HLW-PCN-ENV-10-015	08-04-11	HLW
24590-HLW-PCN-ENV-10-011	08-11-11	HLW
24590-HLW-PCN-ENV-05-010	08-25-11	HLW
24590-HLW-PCN-ENV-10-007	09-09-11	HLW
24590-PTF-PCN-ENV-10-031	07-14-11	PTF
24590-PTF-PCN-ENV-08-008	07-28-11	PTF
24590-PTF-PCN-ENV-10-032	08-10-11	PTF
24590-PTF-PCN-ENV-10-033	08-10-11	PTF
24590-PTF-PCN-ENV-10-034	08-10-11	PTF
24590-WTP-PCN-ENV-11-003	08-11-11	WTP
24590-WTP-PCN-ENV-11-004	08-18-11	WTP
24590-WTP-PCN-ENV-11-002	09-09-11	WTP

Quarter Ending June 30, 2011 24590-HLW-PCN-ENV-08-004

Hanford Facility RCRA Permit Modification Notification Form
Part III, Operating Unit 10
Waste Treatment and Immobilization Plant

Index

Page 2 of 3: Hanford Facility RCRA Permit, Part III, Operating Unit 10, Waste Treatment and Immobilization Plant
Replace Permit Mechanical Systems Data Sheet 24590-HLW-MKD-HOP-P0016 (Mechanical Systems Data Sheet: SBS) in Appendix 10.6 of the Dangerous Waste Permit (DWP).

Submitted by Co-Operator:

Donna M Busche 3/14/11

D. M. Busche Date

Reviewed by ORP Program Office:

DW

D. L. Noyes 4/5/11

Date

Quarter Ending June 30, 2011

24590-HLW-PCN-ENV-08-004

Hanford Facility RCRA Permit Modification Notification Form	
Unit:	Permit Part:
Waste Treatment and Immobilization Plant	**Part III, Operating Unit 10**

Description of Modification:

The purpose of this Class 1 prime modification is to update 24590-HLW-MKD-HOP-P0016, *Mechanical Systems Data Sheet: SBS.*

The following data sheet is being submitted to replace the data sheet currently in Appendix 10.6.

Appendix 10.6			
Replace:	24590-HLW-MKD-HOP-P0016, Rev. 0	With:	24590-HLW-MKD-HOP-00016, Rev. 13

This modification requests Ecology approval and incorporation into the permit the changes to this mechanical data sheet that have been issued since the last revision of the permit data sheet. Revisions are the result of ongoing design and incorporation of vendor detailed design. The following identifies the significant changes that have been revised on the attached mechanical data sheet:

- Revised quality level and seismic category
- Total vessel volume decreased slightly; maximum operating volume increased slightly
- Deleted requirements for upset condition temperatures
- Increased corrosion allowance for wetted parts of shell and bottom head jacket
- Deleted description of removable bed and column
- Added corrosion allowance for cooling coils
- Confirmed gasket material and radiation qualification
- Added internal design pressures for internal coils and cooling jacket
- Added nozzle loads requirements
- Specified design pressures and temperatures for nozzles
- Specified inlet and outlet temperatures
- Updated design pressures and temperatures
- Added equipment qualification data sheet
- Added references for calculations
- Updated references for drawings, calculations, fabrication specification, and seismic design

The following is a list of outstanding change documents that have not been incorporated into this modification:

- 24590-WTP-SDDR-MS-10-00073

Quarter Ending June 30, 2011 24590-HLW-PCN-ENV-08-004

WAC 173-303-830 Modification Class:	Class 1	Class [1]1	Class 2	Class 3
Please mark the Modification Class:		X		

Enter relevant WAC 173-303-830, Appendix I Modification citation number:

Enter wording of WAC 173-303-830, Appendix I Modification citation:

In accordance with WAC 173-303-830(4)(d)(i), this modification notification is requested to be reviewed and approved as a Class [1]1 modification. WAC 173-303-830(4)(d)(ii)(A) states, "Class 1 modifications apply to minor changes that keep the permit current with routine changes to the facility or its operation. These changes do not substantially alter the permit conditions or reduce the capacity of the facility to protect human health or the environment. In the case of Class 1 modifications, the director may require prior approval."

Modification Approved/Concur:	Reviewed by Ecology:
[X] Yes [ ] Denied (state reason below)	
Reason for denial:	
	J. J. Wallace for — 7-28-11
	J. J. Wallace — Date

ISSUED BY
RPP-WTP PDC

MECHANICAL SYSTEMS DATA SHEET: SBS

PLANT ITEM No.
24590-HLW-MK-HOP-SCB-00001
24590-HLW-MK-HOP-SCB-00002

R11224692

Project:	RPP-WTP	P&ID:	24590-HLW-M6-HOP-00001,20001
Project No:	24590	Process Data Sheet:	24590-HLW-MKD-HOP-00006,00013
Project Site:	Hanford	Vessel Drawing:	24590-HLW-MK-HOP-00001001, 1002, 1003, 1004
		Calculation:	24590-HLW-MEC-HOP-00008, 24590-HLW-MEC-HOP-00009, 24590-HLW-MKC-HOP-00003, 24590-HLW-M4C-HOP-00011, 24590-HLW-M4C-30-00003, 24590-HLW-MVC-30-00001, 24590-HLW-N1D-HOP-00010
Description:	HLW Submerged Bed Scrubber		

Reference Data

Charge Vessels (Tag Numbers)	None
Pulsejet Mixers / Agitators (Tag Numbers)	None
RFDs/Pumps (Tag Numbers)	None

Design Data

Quality Level		Q	Fabrication Specs	24590-WTP-3PS-MV00-T0001: NDE requirements are L-1		
Seismic Category		SC-I	Design Code	ASME VIII Div 1		
Service/Contents		Radioactive Liquid	Code Stamp	Yes		
Design Specific Gravity		1.1	NB Registration	Yes		
Maximum Operating Volume (not counting internals)	gal	3,329	Weights (lbs)	Empty	Operating	Test
Total Volume (not counting internals)	gal	4,308	Estimated	50,790	81,900	88,490
Environmental Qualification Requirements		See Attachment 1	Actual *			
Dangerous Waste Permit Affecting		Yes				

Inside Diameter	inch	120			Wind Design	N/A	
Length/Height (TL-TL)	inch	69			Snow Design	N/A	
		Vessel Operating	Vessel Design	Coil/Jacket Design	Seismic Design	24590-WTP-3PS-MV00-T0002 24590-WTP-3PS-SS90-T0001	
Internal Pressure	psig	ATM	15	Note 15	Seismic Base Moment *	ft*lb	
External Pressure	psig	1.5	6.0 (Note 2)	-	Postweld Heat Treat	Per Code	
Temperature	°F	104 - 140 (Note 3)	237	237	Corrosion Allowance	Inch	0.08 (see Note 7)
Min. Design Metal Temp.	°F	41			Hydrostatic Test Pressure *	psig	

Materials of Construction

Component	Material	Minimum Thickness / Size	Containment
Top Head	SB575 N06022	See Drawing	Auxiliary
Shell	SB575 N06022	See Drawing	Primary
Bottom Head	SB575 N06022	See Drawing	Primary
Support	SA240 304 (Note 5)	See Drawing	N/A
Internal Coils/External Jacket	SB622 N06022/ SA312 304 (Note 5)	See Drawing	N/A
Internals	SB575 N06022 / SB622 N06022 (Note 6)	See Drawing	N/A
Pipe	SB622 N06022	See Drawing	Note 8
Forgings/ Bar stock	SB564 N06022	See Drawing	N/A
Gaskets	EPDM (Note 17)	N/A	N/A
Bolting	SA193 Grade B16	N/A	N/A

Miscellaneous Data

Orientation	Vertical	Support Type	Skirt
Insulation Function	None	Insulation Material	None
Insulation Thickness (inch)	None	Internal Finish	Welds descaled as laid

		External Finish	Welds descaled as laid

Remarks

** To be determined by the vendor.*

Note 1 : Deleted.

Note 2 : Design of shell & head under jacket is to be based on 65 psig internal jacket pressure plus 6.0 psig internal vacuum on main vessel.

Note 3 : The vessel headspace minimum operating temperature is 104 °F, however, operating fluctuations can allow it to reach 212 °F maximum. 13

Note 4 : Deleted. 13

Note 5 : SA240 304 & SA312 304 stainless steel material shall have carbon content of 0.030% maximum. Non welded items are excluded from this requirement.

Note 6 : Internal fasteners shall be of alloy N06022 material.

Note 7 : Corrosion allowances:

o Shell and bottom head jacket: A corrosion allowance of 0.01" shall be applied to external surfaces of vessel shell & bottom head exposed to cooling water. A corrosion allowance of 0.04" shall be applied to the stainless steel wetted parts of the shell and bottom head jacket.

o Cooling Coils: The cooling coils shall be provided with a 0.08" external corrosion allowance and 0.01" internal corrosion allowance.

Note 8 : Nozzle necks below the high operating liquid level are primary, the others are auxiliary. 13

Note 9 : Deleted.

Note 10 : The internal coils maximum operating pressure is 98 psig and maximum operating temperature is 113 °F. 13

Note 11 : Deleted.

Note 12 : Deleted. 13

Note 13: Deleted.

Note 14: Deleted. 13

Note 15: The internal design pressure for the internal coils is 150 psig and the internal design pressure for the cooling jacket is 65 psig.

Note 16: Deleted.

Note 17: EPDM is qualified for the radiation (~ 1.0E6 Rads) and temperature environment (~ 250°F) in the melter cave.

Note 18: Data from 24590-HLW-MVC-30-00001.

Note 19: Deleted.

Note 20: Contents of this document are Dangerous Waste Permit affecting.

Note 21: Please note that source, special nuclear and byproduct materials, as defined in the Atomic Energy Act of 1954 (AEA), are regulated at the U.S. Department of Energy (DOE) facilities exclusively by DOE acting pursuant to its AEA authority. DOE asserts, that pursuant to the AEA it has sole and exclusive responsibility and authority to regulate source, special nuclear, and byproduct materials at DOE-owned nuclear facilities. Information contained herein on radionuclides is provided for process description purposes only.

Note 22: Deleted.

Note 23: Attachment 2 added for BNI use only.

Note 24: ***The following nozzle loads are to be used for N11, N12, and N13 per CCN 151558:***

Axis directions follow Global Axis Orientation: X = North, Y = Up, Z = East

N11 Design Loads						
	Flange Forces (Lbs)			Flange Moments (Ft-Lbs)		
Load Case	Fx	Fy	Fz	Mx	My	Mz
Weight	348	1314	401	2748	0	2387
Thermal (450 °F)	14	208	128	1078	362	740
Thermal (1000 °F)	198	424	329	2485	326	1981

Seismic	329	414	342	1469	1333	1346

N12 Design Loads						
	Flange Forces (Lbs)			**Flange Moments (Ft-Lbs)**		
Load Case	**Fx**	**Fy**	**Fz**	**Mx**	**My**	**Mz**
Weight	0	683	11	38	0	0
Thermal (165 °F)	314	616	259	945	549	1801
Seismic	293	468	340	1763	148	1630

N13 Design Loads						
	Flange Forces (Lbs)			**Flange Moments (Ft-Lbs)**		
Load Case	**Fx**	**Fy**	**Fz**	**Mx**	**My**	**Mz**
Weight	343	1291	386	3128	58	2600
Thermal (1000 °F)	143	420	307	2538	572	1897
Seismic	356	418	362	1751	1847	1553

The following nozzle loads due to HLW jumpers are applied at the jumper connection and are to be used per 24590-WTP-3PN-MV00-00027:

Jumper Pipe Size	**Load Type**	**Forces**			**Moments**		
		Fx (lb)	**Fy (lb)**	**Fz (lb)**	**Mx (ft -lb)**	**My (ft-lb)**	**Mz (ft-lb)**
2 in	**Weight**	30	150	30	100	20	100
	Seismic	100	140	100	225	200	225
	Thermal	200	80	200	250	200	250
3 in	**Weight**	170	490	170	300	280	300
	Seismic	430	290	430	600	400	600
	Thermal	610	360	610	1010	500	1010
4 in	**Weight**	500	800	500	950	500	950
	Seismic	550	500	550	650	650	650
	Thermal	1300	600	1300	1050	1000	1050
6 in	**Weight**	600	2000	600	2000	700	2000
	Seismic	1500	1500	1500	1500	1500	1500
	Thermal	2000	2000	2000	2000	2000	2000
8 in	**Weight**	1800	3600	1800	3100	1800	3100
	Seismic	3100	3100	3100	3600	3100	3600
	Thermal	3100	3100	3100	3100	3100	3100

Please note that source, special nuclear, and byproduct materials, as defined in the Atomic Energy Act of 1954 (AEA) are regulated at the U. S. Department of Energy (DOE) facilities exclusively by DOE acting pursuant to its AEA authority. DOE asserts that pursuant to AEA, it has sole and exclusive responsibility and authority to regulate source, special nuclear, and byproduct materials at DOE-owned nuclear facilities. Information contained herein on radionuclides is provided for process description purposes only.

Table of Nozzle Connections

Nozzle	Connecting Jumper Size	Design Pressure (psig)	Design Temperature (°F)
N01	Nozzle sizes are the same as those listed in the Nozzle Table of BNI Dwg 24590-HLW-MK-HOP-00001001 Rev. 1.	135	113
N02		-6/15	237
N03		-14.7	113
N04		-14.7	113
N05		-6/15	237
N06		135	113
N07		NA	NA
N08		110	165
N09		NA	NA
N10		-6/15	237
N11		-6/15	237
N12		-6/15	237
N13		-6/15	237
N14		-6/15	237
N15		150	113
N16		150	113
N17		150	113
N18		150	113
N19		150	113
N20		150	113
N21		-14.7	165
N22		-14.7	165
N23		110	165
N24		110	165
N25		-14.7	165
N26		-14.7	165
N27		-14.7	165
N28		65	113
N29		65	113

Equipment Cyclic Data Sheet

Component Plant Item Number:	**24590-HLW-MK-HOP-SCB-00001/-00002**
Component Description	**Vessel**

The information below envelopes operational duty for fatigue assessment. It is not to be used as operational data. 13

Materials of Construction	**SB575 N06022 (Hastelloy C –22)**
Design Life	**40 years**

BECHTEL	**MECHANICAL SYSTEMS DATA SHEET: SBS**	PLANT ITEM No. **24590-HLW-MK-HOP-SCB-00001** **24590-HLW-MK-HOP-SCB-00002**

Component Function and Life Cycle Description	**The SBS is a vessel designed for aqueous scrubbing of entrained radioactive particulate from the melter offgas. It also serves to cool and condense the melter vapor emissions.** 13 **The inlet temperature ranges from 371°F to 764°F. Operating temperature of the SBS ranges from 104 - 140°F with nominal setpoint of 122°F. Cooling coils and a cooling jacket remove the heat from the inlet offgas stream.** 13 **Deleted.** 13 **Non-routine maintenance is expected to occur annually. During this period the SBS will be allowed to cool and remain at ambient temperature, from 59 to 113 °F.** **Deleted.** 13

Load Type (see Note 18)		Min	Max	Number of Cycles	Comment
Design Pressure	psig	***-6.0***	***15***	***10***	***Nominal assumption***
Operating Pressure	psig	***-1.78***	***0***	***40***	***Assume an annual shutdown (40 cycles/life time).*** 13
Operating Temperature	°F	***104***	***140***	***40***	***Normal operating range***
Contents Specific Gravity		***1***	***1.1***	***40***	***Nominal operating is 1.1, assume annual flush out and replace with clean water. "Min" value per "Design Data" table, page 1 of this data sheet.***
Contents Level	inch	***0***	***57***	***120***	***Nominal operating is 57 inch, assume annual 3x flush out and replace with clean water.***

Localized Features	***Temperatures below are in °F.***	
Headspace temperature with inlet offgas flow through N11 only.	***Deleted***	***Assume normal mode is feeding with 40 cycles to upset (122 to 212) and back to idle (212 to 140).*** ***Assume normal mode is feeding with 2100 cycles to idle (122 to 140) and back to feeding (140 to 122).*** ***Assume mode is idle with 40 cycles to upset (140 to 212), and return to idle (212 to 140).*** ***Assume mode is idle with 40 cycles to off (140 to 59) and back to idle (59 to 140).*** 13
Headspace temperature with inlet offgas flow through N13 only.	***Deleted***	***Assume normal mode is stand-by, with 40 cycles to upset (104 to 212) and back to stand-by (212 to 104). [Unplanned activations].*** ***Assume mode is stand-by with 2100 cycles to upset (104 to 212), and return to stand-by (212 to 104). [Weekly surveillance tests]*** ***Assume mode is idle with 40 cycles to off (140 to 59) and back to idle (59 to 140).***
Cooling supply/returns	***(1) Maximum cooling jacket: 83 in, 89 out; minimum cooling jacket: 63 in, 69 out*** ***(2) Maximum cooling coils: 83 in, 101 out; minimum cooling coils: 63 in, 81 out***	***Assume annual cooling outage with inlet cooling jacket & cooling coil temperatures of 63 and outlet temperatures of 69 & 81, respectively, and SBS vessel temperature of 140 with ambient temperature of 59 (40 cycles). Assume annual cooling supply failure/isolation during operation, in=out=212 (40 cycles).*** 13

Notes

Cycle increase: The Seller must increase the numbers of operational cycles given above by 10% to account for commissioning duty unless otherwise noted.

The following off-gas temperatures are to be used for determining N11 & N13 vessel flange temperatures: 13

Temperature (°F)	Description
1,320	Bounding upper inlet bulk temperature of off-gas at maximum flow for N11
924	Pipe wall temperature @ bulk temperature of 1,320 °F for N11
497	Bounding lower bulk temperature while feeding for nominal feed case for N11 & N13

The maximum coincident local operating temperature at each jumper flange adjacent to N11 and N13 occurs at the lower bulk temperature (497°F) while feeding. The maximum non-coincident local operating temperature at each jumper flange at idle (1,320°F) for N11 and and the lower bulk temperature (497°F) while feeding for N13.

Safety Screening/Evaluation Required? If yes per 24590-WTP-GPP-SREG-002, E&NS Signature below	Yes	X	No	

Approval

Rev	Description	System Engr	Vessel Engr	Checked	E&NS	Approved	Date
0	**Issued For Purchase**	M.S.	D.H.	C.S. W.D.	N/A	M.H. W.E	01/25/03
1	**Issued For Purchase (Added Note 13)**	M.S.	M.A.	W.D., C.S.	N/A	M.H., W.E.	4/18/03
2	**Issued for Purchase**	R. Peters	M. Arampalam	M. Studd	N/A	J. Pullen	4/1/04
3	**Issued for Purchase**	R. Peters	M. Arampalam	J. Rouse	N/A	E. Isern	9/2/04
4	**Issued for Purchase**	R. Peters	M. Arampalam	J. Rouse	N/A	E. Isern	11/30/04
5	**Issued for Purchase**	R. Peters	M. Arampalam	J. Rouse	N/A	E. Isern	6/30/05
6	**Issued for Purchase**	J. Rouse	R. Peters	A. Benamou	N/A	J. Julyk	12/8/05
7	**Issued for Purchase (revised to SC-I from SC-III; revised nominal feed & upset temperatures; cooling water temps revised; EQ data updated)**	J. Rouse	R. Peters	N. Johnson	C. Meng	J. Julyk	3/6/07
8	**Updated EQ Data & added nozzle loads for N11, N12, & N13**	J. Rouse	R. Peters	P. Pinto/ R. Hills	C. Meng	J. Julyk	4/17/07
9	**Added jumper nozzle loads, Notes 20 & 21, & EQD**	M. O'Neil	R. Peters	W. Wilcox	M. Hinton	J. Julyk	6/24/08
10	**See Note 22.**	A. Coulam	R. Peters	M. Seed	C. Meng	J. Julyk	10/21/08
11	**Added Calc for HLW Vessel Cyclic Inputs & Deleted HPAV Loads**	M. Kufahl	R. Peters	M. Seed	C. Meng	J. Julyk	2/17/09
12	**Specified jumper load location; revised cooling water info; revised operating & total volumes, added corrosion allowance for vessel portion exposed to cooling water. Added nozzle temperatures**	M. O'Neill	R. Peters	M. Seed	C. Meng	J. Julyk	10/22/09

BECHTEL	**MECHANICAL SYSTEMS DATA SHEET: SBS**	**PLANT ITEM No.** **24590-HLW-MK-HOP-SCB-00001** **24590-HLW-MK-HOP-SCB-00002**

13	**Revised vessel headspace temperatures, added local jumper flange temperatures, and clarified fatigue cycles.**	M. O'Neill	Ray Peters RP Ray Peters	Rich Peters RDP	C. Meng CMeng	J. Julyk	6/16/10

RIVER PROTECTION PROJECT – WASTE TREATMENT PLANT

EQUIPMENT QUALIFICATION DATA SHEET

FOR

HLW Submerged Bed Scrubber (SBS)

Attachment 1

EQUIPMENT QUALIFICATION DATASHEET (EQD)

Equipment Identification

Component Tag Number	24590-HLW-MK-HOP-SCB-00001/00002	Safety Classification	☒ SC ☒ SS ☐ APC ☐ SDC ☐ SDS ☐ RRC The SBS is SS for gas confinement and SC for liquid confinement following a seismic event.
Manufacturer / Supplier	GE - Hitachi		
Requisition Number	24590-QL-MRA-MKAS-00004		
Model	N/A	Seismic Category	☒ SC-I ☐ SC-II ☒ SC-III ☐ SC-IV The SBS is SC-III for gas confinement and SC-I for liquid confinement following a seismic event. The entire SBS vessel, including internals, shall be designed as SC-1.
Description (Include descriptive text [e.g., location, elevation])	The Submerged Bed Scrubbers are located in the melter caves in rooms H-0106 and H-0117 at column lines K-9 and K-14, respectively (El. 0' - 0").		
Safety Function(s)	1. Safety Class Function - The SBS maintains its liquid level following a seismic DBE (24590-WTP-PSAR-ESH-01-002-04 Rev. 4m, Table 4A-1, page 4A-5). 2. Safety Significant Function - The SBS ensures confinement of radioactive materials during normal operations and accident conditions (24590-WTP-PSAR-ESH-01-002-04 Rev. 4m, Table 4A-2, page 4A-14).		

Seismic Safety Function	☒ Yes ☐ No	Room Number(s):	H-0106 & H-0117
Maintenance Accessible	☒ Yes ☐ No	Method of Maintenance Access:	☒ Remote ☐ Hands On ☐ None
Seismic Operability Requirements:	☒ During Seismic Event	☒ After Seismic Event	
ITS Equipment Type:	☒ Passive Mechanical	☐ Active Mechanical	☐ Electrical

Equipment Environmental Qualification (EEQ)

Environment ☒ Mild ☐ Harsh Contamination Class: C5 Radiation Class: R5	Hi Rad Service ☐ Yes ☒ No	Design Life (yrs) ☒ 40 ☐ Other _____

Parameter Type/Units	Parameter Value	Time Duration (number)	Time Units	WTP Document Number (BUYER)	Submittal Number (SELLER)
Normal					
Normal High Temperature (°F)	113	Continu-ous	yrs	24590-HLW-U0D-W16T-00001 Rev.0	TBD
Normal Low Temperature (°F)	59	Continu-ous	yrs	24590-HLW-U0D-W16T-00001 Rev.0	TBD
Normal High Relative Humidity (%RH)	100	Continu-ous	yrs	24590-HLW-U0D-W16T-00001 Rev.0	TBD
Normal Low Relative Humidity (%RH)	5	Continu-ous	yrs	24590-HLW-U0D-W16T-00001 Rev.0	TBD
Normal High Pressure (in.-w.g.)	0	Continu-ous	yrs	24590-HLW-U0D-W16T-00001 Rev.0	TBD
Normal Low Pressure (in.-w.g.)	-1.4	Continu-ous	yrs	24590-HLW-U0D-W16T-00001 Rev.0	TBD
Normal Radiation Dose Rate (mR/hr)	5.02E+04	40	yrs	Note 1	Note 5
Vibration Magnitude (g)	N/A	N/A	N/A	24590-HLW-U0D-W16T-00001 Rev.0	N/A
Vibration Frequency (Hz)	N/A	N/A	N/A	24590-HLW-U0D-W16T-00001 Rev.0	N/A

EQUIPMENT QUALIFICATION DATASHEET (EQD)

Equipment Environmental Qualification (EEQ) *(continued)*

Parameter Type/Units	Parameter Value	Time Duration (number)	Time units	WTP Document Number (BUYER)	Submittal Number (SELLER)
Additional Normal Information:	Note 1: CCN 177691				
Abnormal					
Abnormal High Temperature (°F)	170	N/A	N/A	24590-HLW-U0D-W16T-00001 Rev.0	TBD
Abnormal Low Temperature (°F)	40	N/A	N/A	24590-HLW-U0D-W16T-00001 Rev.0	TBD
Abnormal High Relative Humidity (%RH)	100	N/A	N/A	24590-HLW-U0D-W16T-00001 Rev.0	TBD
Abnormal Low Relative Humidity (%RH)	2	N/A	N/A	24590-HLW-U0D-W16T-00001 Rev.0	TBD
Abnormal High Pressure (in.-w.g.)	4	N/A	N/A	24590-HLW-U0D-W16T-00001 Rev.0	TBD
Abnormal Low Pressure (in.-w.g.)	-6.7	N/A	N/A	24590-HLW-U0D-W16T-00001 Rev.0	TBD
Abnormal Radiation Dose Rate (mR/hr)	1.52E+05	40	yrs	Note 2	Note 5
Wet Sprinkler System Present	Not required	N/A	N/A	24590-HLW-U0D-W16T-00001 Rev.0	N/A
Additional Abnormal Information	Note 2: CCN 177691				
Design Basis Events (DBE)					
DBE High Temperature (°F)	165	N/A	N/A	24590-HLW-U0D-W16T-00001 Rev.0	TBD
DBE Low Temperature (°F)	40	N/A	N/A	24590-HLW-U0D-W16T-00001 Rev.0	TBD
DBE High Relative Humidity (%RH)	100	N/A	N/A	24590-HLW-U0D-W16T-00001 Rev.0	TBD
DBE Low Relative Humidity (%RH)	2	N/A	N/A	24590-HLW-U0D-W16T-00001 Rev.0	TBD
DBE High Pressure (in.-w.g.)	4	N/A	N/A	24590-HLW-U0D-W16T-00001 Rev.0	TBD
DBE Low Pressure (in.-w.g.)	-6.7	N/A	N/A	24590-HLW-U0D-W16T-00001 Rev.0	TBD
DBE Radiation Dose Rate (mR/hr)	1.52E+05	0	yrs	Note 3	Note 5
Flood Height (ft)	3.80	1,000	hrs	24590-HLW-U0D-W16T-00001 Rev.0	N/A
Submergence (ft)	Note 4	N/A	N/A	N/A	N/A
Chemical/Spray Exposure	No	N/A	N/A	N/A	N/A
Additional DBE Information	Note 3: CCN 177691 Note 4: The SBS is not submerged during flood conditions.				

EQUIPMENT QUALIFICATION DATASHEET (EQD)

DBE Chemical Exposure Details	
DBE Chemical Types/Concentrations	1. There is no spray source present normally. 2. A nitric acid line is used for maintenance only and is normally inactive. 3. The SBS's are unaffected by glass formers since they are ~ 6 ft. from the feed vessel and separated from the feed vessels by a concrete wall.

Interfaces (Electrical)	
Power Supply Voltage (VAC, VDC)	N/A
Power Supply Frequency (Hz)	N/A
Power Connection Method	N/A
I/O Signals to/from Equipment	N/A
I/O Connection Method	N/A

Interfaces (Mechanical)	
Mounting Configuration (orientation)	Vertical vessel
Mounting Method (bolts, welds, etc.)	Anchor bolts
Auxiliary Devices	N/A

Equipment Seismic Qualification (ESQ)

Parameter	Title	Reference/Document Number	Version / Revision	Remarks
WTP Seismic Design Specification (BUYER)	Engineering Specification for Seismic Qualification of Seismic Category I/II Equipment and Tanks	24590-WTP-3PS-SS90-T0001	Rev. 1	N/A
Specified Seismic Load (BUYER)	HLW Vitrification Building Seismic Analysis - WSGM In-Structure Response Spectra (ISRS)	Calculation 24590-HLS-S0C-S15T-00057; ISRS Figures 554, 555, & 557; CCN 214807	Rev. 00A	N/A
Design Seismic Load (SELLER	TBD	TBD	TBD	N/A
Qualification Method (SELLER)	TBD	TBD	TBD	Dynamic Analysis
Qualification Report Number (SELLER)	TBD	TBD	TBD	N/A
Submittal Number (BUYER)	TBD	TBD	TBD	N/A

13

Notes and Additional Information

Note 5: BNI (BUYER) shall perform Equipment Environmental Qualification in accordance with 24590-WTP-DC-ENG-06-001, Design Criteria for Equipment Seismic and Environmental Qualification.

Attachment 2: References for Submerged Bed Scrubber Vesssels 24590-HLW-MK-HOP-SCB-00001/00002

Data Sheet: 24590-HLW-MKD-HOP-00016 Rev. 12

Data	Document #	Rev	Document Title	Comments
Quality Level	24590-HLW-M6-HOP-00001	5	P&ID - HLW Melter Offgas System Melter 1 Primary Offgas Scrubber	
Seismic Category	24590-HLW-M6-HOP-00001	5	P&ID - HLW Melter Offgas System Melter 1 Primary Offgas Scrubber	
Design Specific Gravity	24590-HLW-MVC-30-00001	B	HLW Vessel Cyclic Datasheet Inputs	
Max Operating Volume	24590-HLW-MKC-HOP-00003	0	Process Sizing of the HLW Submerged Bed Scrubber	volumes are approximations only
Total Volume	24590-HLW-MKC-HOP-00003	0	Process Sizing of the HLW Submerged Bed Scrubber	volumes are approximations only
Inside Diameter	24590-HLW-MKC-HOP-00003	0	Process Sizing of the HLW SubmergedBed Scrubber	
Length TL-TL	24590-HLW-MKC-HOP-00003	0	Process Sizing of the HLW Submerged Bed Scrubber	
Vessel Operating Pressure (Min./Max.)	24590-HLW-MVC-30-00001	B	HLW Vessel Cyclic Datasheet Inputs	
Vessel Operating Pressure (external)	24590-HLW-MVC-30-00001	B	HLW Vessel Cyclic Datasheet Inputs	
Vessel Operating Pressure (internal)	24590-HLW-MVC-30-00001	B	HLW Vessel Cyclic Datasheet Inputs	
Vessel Design Pressure (internal)	24590-HLW-MVC-30-00001	B	HLW Vessel Cyclic Datasheet Inputs	15 psig value is provided in Section 16
Vessel Design Pressure (external)	24590-HLW-MVC-30-00001	B	HLW Vessel Cyclic Datasheet Inputs	
Internal Cooling Coils Operating Pressure	24590-HLW-M6X-HOP-00001	5	Line List	
Cooling Jacket Operating Pressure	24590-HLW-M6X-HOP-00001	5	Line List	
Internal Cooling Coils Design Pressure	24590-HLW-M6X-HOP-00001	5	Line List for 24590-HLW-M6-HOP-00001	
Cooling Jacket Design Pressure	24590-HLW-M6X-HOP-00001	5	Line List for 24590-HLW-M6-HOP-00001	
Vessel Operating Temperature (Min./Max.)	24590-HLW-MVC-30-00001	B	HLW Vessel Cyclic Datasheet Inputs	
Vessel Design Temperature	24590-HLW-MKC-HOP-00003	0	Process Sizing of the HLW Submerged Bed Scrubber	Sht. 9. Design Temp = Max Op (212) + 25 = 237 F
Corrosion Allowance	24590-HLW-N1D-HOP-00010	4	Corrosion Evaluation HOP-SCB-00001/2 (HLW)	
Vessel Materials of Construction	24590-HLW-N1D-HOP-00010	4	Corrosion Evaluation HOP-SCB-00001/2 (HLW)	
Cyclic Data (Vessel)	24590-HLW-MVC-30-00001	B	HLW Vessel Cyclic Datasheet Inputs	
Cooling Water Cooling Coil Temperature (Min./Max.)	24590-HLW-MEC-HOP-00009	0	HLW Submerged Bed Scrubber Cooling Coils Effectiveness	
Cooling Water Jacket Temperature (Min./Max.)	24590-HLW-MEC-HOP-00008	0	HLW Submerged Bed Scrubber Cooling Jacket Effectiveness	
Nozzle Loads	24590-WTP-3PN-MV00-00027	NA	Jumper Nozzle Loads	N11, N12, and N13 per CCN 151558.
Max. EPDM Radiation	3DG N61 005	0	Bechtel Corporation - Nuclear Engineering Design Guide for Radiation Damage Thresholds for Organic and Inorganic Materials	
Min. Cooling Water Temperature	24590-HLW-M6C-PCW-00010	A	Design Pressure & Temperature Calculation for Process Cooling Water System	
Headspace Temperature	24590-HLW-M4C-HOP-00011	1	HLW Melter Offgas System Design Basis Flowsheets	Page 11, Item 6. The offgas discharging from the SBS is saturated with water vapor since the gas is bubbled through a submerged packed bed. Therefore the water content of the discharge has a relative humidity of 100% and the outlet temperature is 212°F
Operating Temperatures	BNI Calc. 24590-HLW-M4C-HOP-00011 Rev 001	1	Maximum Wall Temperature of HLW Melter Offgas Piping Thermal Analysis for SBS Downcomer Pipe Assembly	1.) Stand-by is bounding lower operating temperature (104°F) for fatigue analysis. 2.) Idle temperature is bounding upper operating temperature (140°F) for fatigue analysis.

Cooling supply/returns	(1) Maximum cooling jacket: 83 in, 89 out jacket: 63 in, 69 out Refs: (a) Max/min inlet temps per sht ii of Calc 24590-HLW-MEC-HOP-00008 Rev 0, SBS Cooling jacket Effectiveness (b) Outlet temps from (a) above, sht 20 (2) Maximum cooling coils: 83 in, 101 out; minimum cooling coils: 63 in, 81 out Refs: (a) Max/min inlet temps per sht ii of Calc 24590-HLW-MEC-HOP-00009 Rev 0, SBS Cooling jacket Effectiveness (b) Outlet temps from (a) above, sht 20	Assume annual cooling outage with inlet cooling jacket & cooling coil temperatures of 63 and outlet temperatures of 69 & 81, respectively, and SBS vessel temperature of 140 with ambient temperature of 59 (40 cycles). Assume annual cooling supply failure/isolation during operation, in = out = 212 (40 cycles). Ref: (a) 59 F is the bounding lower temp for normal conditions from EQ data sheet (b) Cooling water is at lowest operating temps and vessel is at highest operating condition, 140 F, to evaluate thermal stress (highest delta T)

Internal vessel piping and nozzle design shall be compatible with the following external connection pipe size and pressure/temperature conditions outside the vessel:

Nozzle	Connecting Jumper Size	Design Pressure (psig)	Design Temperature (°F)	Comments*
N01	Nozzle sizes are the same as those listed in the Nozzle Table of BNI Dwg 24590-HLW-MK-HOP-00001001 Rev. 1.	135	113	Line List 24590-HLW-M6X-HOP-00001 REV 5
N02		-6/15	237	Spare nozzle; Vessel design T & P
N03		-14.7	113	Line List 24590-HLW-M6X-HOP-00001 REV 5
N04		-14.7	113	Line List 24590-HLW-M6X-HOP-00001 REV 5
N05		-6/15	237	Spare nozzle; Vessel design T & P
N06		135	113	Line List 24590-HLW-M6X-HOP-00001 REV 5
N07		NA	NA	Thermocouple; Vessel design T & P
N08		110	165	Line List 24590-HLW-M6X-HOP-00001 REV 5
N09		NA	NA	Thermocouple; Vessel design T & P
N10		-6/15	237	Spare nozzle; Vessel design T & P
N11		-6/15	237	Jumper Data Sheet Unissued; Vessel design T & P; Upset condition 1,000 F per Assumption 83 of Calc 24590-HLW-MVC-30-00001
N12		-6/15	237	Jumper Data Sheet Unissued; Vessel design T & P
N13		-6/15	237	Jumper Data Sheet Unissued; Vessel design T & P; Upset condition 1,000 F per Assumption 83 of Calc 24590
N14		-6/15	237	Spare nozzle; Vessel design T & P
N15		150	113	Line List 24590-HLW-M6X-HOP-00001 REV 5
N16		150	113	Line List 24590-HLW-M6X-HOP-00001 REV 5
N17		150	113	Line List 24590-HLW-M6X-HOP-00001 REV 5
N18		150	113	Line List 24590-HLW-M6X-HOP-00001 REV 5
N19		150	113	Line List 24590-HLW-M6X-HOP-00001 REV 5
N20		150	113	Line List 24590-HLW-M6X-HOP-00001 REV 5
N21		-14.7	165	Line List 24590-HLW-M6X-HOP-00001 REV 5
N22		-14.7	165	Line List 24590-HLW-M6X-HOP-00001 REV 5
N23		110	165	Line List 24590-HLW-M6X-HOP-00001 REV 5
N24		110	165	Line List 24590-HLW-M6X-HOP-00001 REV 5
N25		-14.7	165	Line List 24590-HLW-M6X-HOP-00001 REV 5
N26		-14.7	165	Line List 24590-HLW-M6X-HOP-00001 REV 5
N27		-14.7	165	Line List 24590-HLW-M6X-HOP-00001 REV 5
N28		65	113	Line List 24590-HLW-M6X-HOP-00001 REV 5
N29		65	113	Line List 24590-HLW-M6X-HOP-00001 REV 5

Following are off-gas temperatures for determining the N11 & N13 flange temperatures:

Temperature (°F)	Description	Reference
1,320	Bounding upper inlet bulk temperature of off-gas at maximum flow	BNI Calc. 24590-HLW-PYC-HOP-00003 Rev 00A, p. 15
924	Pipe wall temperature @ bulk temperature of 1,320 °F	Ditto, p. 15
497	Bounding lower bulk temperature while feeding for nominal feed case	BNI Calc. 24590-HLW-M4C-HOP-00011 Rev 001, p. A6

Attachment 2 to CCN 230439

BNI CERTIFICATION STATEMENT

1 Page

Bechtel National, Inc. Certification

The following certification statement is provided consistent with Contract No. DE-AC27-01RV14136, Section H.26, Environmental Permits, paragraph (g) for the submittal of the Hanford Facility Resource Conservation and Recovery Act Permit Modification Notification form 24590-HLW-PCN-ENV-08-004.

I certify under penalty of law that this document and all attachments were prepared under my direction or supervision in accordance with a system designed to assure that qualified personnel properly gather and evaluate the information submitted. Based on my inquiry of the person or persons who manage the system, or those persons directly responsible for gathering the information, the information submitted is, to the best of my knowledge and belief, true, accurate, and complete. I am aware that there are significant penalties for submitting false information, including the possibility of fine and imprisonment for knowing violations.

F. M. Russo
Project Director

3-16-11
Date

Quarter Ending 09/30/2011 24590-HLW-PCN-ENV-10-015

Hanford Facility RCRA Permit Modification Notification Form
Part III, Operating Unit 10
Waste Treatment and Immobilization Plant

Index

Page 2 of 3: Hanford Facility RCRA Permit, Part III, Operating Unit 10, Waste Treatment and Immobilization Plant

Replace Equipment Assembly Drawing for Waste Neutralization Vessel (HDH-VSL-00003) in Appendix 10.6 of the Dangerous Waste Permit (DWP)

Replace Mechanical Data Sheet for Waste Neutralization Vessel (HDH-VSL-00003) in Appendix 10.6 of the DWP

Submitted by Co-Operator:

Donna Busche

D. M. Busche Date

Reviewed by ORP Program Office:

D. L. Noyes 7/6/11

Date

Quarter Ending 09/30/2011 24590-HLW-PCN-ENV-10-015

Hanford Facility RCRA Permit Modification Notification Form	
Unit: **Waste Treatment and Immobilization Plant**	Permit Part: **Part III, Operating Unit 10**

Description of Modification:

The purpose of this Class 1 prime modification is to update and replace the following Equipment Assembly Drawing and Mechanical Data Sheet in Appendix 10.6 of the DWP:

Appendix 10.6			
Replace:	24590-HLW-MV-HDH-P0003, Rev. 1	With:	24590-HLW-MV-HDH-00003, Rev. 1
	24590-HLW-MVD-HDH-P0003, Rev. 2		24590-HLW-MVD-HDH-00003, Rev. 5

This modification requests Ecology approval and incorporation into the permit the specific changes to the above documents that are identified by notes, clouds, and revision triangles. Revisions are the result of ongoing design. Significant changes are summarized below:

24590-HLW-MV-HDH-00003, Rev. 1

- Updated nozzle table
- Revised Notes 1 through 8; added Notes 9 through 14
- Deleted Holds 1 through 7
- Revised plan view and section views
- Added Details 4 through 6. Added information on sparger, sparger support, and sparger standoff (Details 4 and 5). Added information on the radar level detection system (Detail 6)

24590-HLW-MVD-HDH-00003, Rev. 5

- Revised vessel Service/Contents (included 30% hydrogen peroxide as a content)
- Lowered specific gravity and maximum operating volume
- Revised operating external pressure and temperature and minimum design metal temperature
- Updated minimum and maximum operating pressures, temperatures, specific gravities, and content levels
- Updated number of cycles on equipment cyclic data sheet
- Specified nozzle loads and added reference for nozzle loads
- Added, deleted and changed notes; provided references for data sheet

This modification requests Ecology approval and incorporation of the following list of outstanding change documents into the permit. Although not yet incorporated into the revised documents attached to this PCN, this list of outstanding DCNs are intended to be incorporated into this modification:

24590-HLW-MVN-HDH-00014

Quarter Ending 09/30/2011

24590-HLW-PCN-ENV-10-015

WAC 173-303-830 Modification Class:	Class 1	Class [1]1	Class 2	Class 3
Please mark the Modification Class:		X		

Enter relevant WAC 173-303-830, Appendix I Modification citation number: NA

Enter wording of WAC 173-303-830, Appendix I Modification citation:

In accordance with WAC 173-303-830(4)(d)(i), this modification notification is requested to be reviewed and approved as a Class [1]1 modification. WAC 173-303-830(4)(d)(ii)(A) states, "Class 1 modifications apply to minor changes that keep the permit current with routine changes to the facility or its operation. These changes do not substantially alter the permit conditions or reduce the capacity of the facility to protect human health or the environment. In the case of Class 1 modifications, the director may require prior approval."

Modification Approved/Concur:	Reviewed by Ecology:
[X] Yes [ ] Denied (state reason below) Reason for denial:	J. J. Wallace — Date: 8-4-11

MECHANICAL DATA SHEET: VESSEL

PLANT ITEM No.
24590-HLW-MV-HDH-VSL-00003

Project:	***RPP-WTP***	P&ID:	***24590-HLW-M6-HDH-00002***
Project No:	***24590***	Vessel Drawing	***24590-HLW-MV-HDH-00003***
Project Site:	***Hanford***		
Description:	***Waste Neutralization Vessel***		

R11273761

Reference Data

Charge Vessels (Tag Numbers)	***N/A***	ISSUED BY
Pulsejet Mixers / Agitators (Tag Numbers)	***N/A***	RPP-WTP PDC
RFDs/Pumps (Tag Numbers)	***N/A***	

Design Data

Quality Level		***CM***	Fabrication Specs	***24590-WTP-3PS-MV00-T0001***		
Seismic Category		***SC-III***	Design Code	***ASME VIII Div 1***		
Service/Contents		***0.5 M Cerium Nitrate, 1M Nitric Acid, 30% Hydrogen Peroxide, 5M NaOH, Demin Water***	Code Stamp	***Yes***		
Design Specific Gravity		***1.03***	NB Registration	***Yes***		
Maximum Operating Volume	gal	***4650 (Note 4)***	Weights (lbs)	Empty	Operating	Test
Total Volume	gal	***5315 (Note 4) actual***	Estimated	***17,500***	***58,000***	***62,000***
Environmental Qualification		***N/A***	Actual *			

Inside Diameter	inch	***84***			Wind Design	***None***	
Length/Height (TL-TL)	inch	***204***			Snow Design	***None***	
		Vessel Operating	Vessel Design	Coil/Jacket Design	Seismic Design	***24590-WTP-3PS-MV00-T0002*** ***24590-WTP-3PS-FB01-T0001***	
Internal Pressure	psig	***Atm***	***15***	***N/A***	Seismic Base Moment *	ft*lb	
External Pressure	psig	***5.8***	***FV***	***N/A***	Postweld Heat Treat	***None***	
Temperature	°F	5 ***122***	***237***	***N/A***	Corrosion Allowance	Inch	***0.04***
Min. Design Metal Temp.	°F	***59***			Hydrostatic Test Pressure *	psig	

Materials of Construction

Component	Material	Minimum Thickness / Size	Containment
Top Head	***SA-240 304 (Note 2)***	***See Drawing***	***Auxiliary***
Shell	***SA-240 304 (Note 2)***	***See Drawing***	***Primary***
Bottom Head	***SA-240 304 (Note 2)***	***See Drawing***	***Primary***
Support	***SA-240 304 (Note 2)***	***See Drawing***	***N/A***
Jacket/Coils/Half-Pipe Jacket	***SA-240 304 (Note 2)***	***See Drawing***	***N/A***
Internals	***SA-240 304 (Note 2)***	***See Drawing***	***Thermowells Primary***
Pipe	***SA-312 TP304 (Note 2)***	***See Drawing***	***Note 1***
Forgings/ Bar stock	***SA-182 F304 (Note 2)***	***See Drawing***	***N/A***
Bolting/Gaskets	***SA193 B8 CLASS 2, SPIRAL WOUND GRAPHITE FILLED***	***N/A***	***N/A***

Miscellaneous Data

Orientation	***Vertical***	Support Type	***Skirt***
Insulation Function	***Not Applicable***	Insulation Material	***Not Applicable***
Insulation Thickness (inch)	***Not Applicable***	Internal Finish	***Note 3***
		External Finish	***Note 3***

DATA SHEET #: 24590-HLW-MVD-HDH-00003, REV 5

Remarks

**** To be determined by the vendor.***
Note 1: Nozzle necks below max. operating level are primary, others auxiliary.
Note 2: Maximum carbon content of 0.030% for all welded components.
Note 3: Welds descaled as laid.
Note 4: Vessel volumes are approximate and do not account for manufacturing tolerances, nozzles, and displacement of internals.
Notes 5 through 8: Deleted 5
Note 9: Contents of this document are dangerous waste permit affecting.
Note 10: Revision 5 Add radionuclide disclaimer and EN&S review check box. Updated heat transfer summary. 5

Equipment Cyclic Data Sheet

Component Plant Item Number:	***HDH-VSL-00003***
Component Description	***Parent Vessel***

The information below is provisional and envelopes operational duty for fatigue assessment. It is not to be used as operational data.

Materials of Construction	***SA-240-304 with 0.030 % carbon.***
Design Life	***40 Years***
Component Function and Life Cycle Description	***The parent vessel is cyclically loaded and discharged in batch operation. In each batch operation, 2,037 gallons of liquid content is loaded and discharged.***

Load Type		Min	Max	Number of Cycles	Comment
Design Pressure	psig	***FV***	***15***	***10***	***Nominal assumption***
Operating Pressure	psig	***-5.8***	***0***	***14600***	
Operating Temperature	°F	***59***	***212***	***14600***	
Contents Specific Gravity		***1.03***	***1.18***	***14600***	
Contents Level	inch	***14***	***192***	***14600***	
Localized Features					
Nozzles **N06/N06A, N07/N07A, N29/N29A, N30/N30A**		***59***	***212***	***Cycles: 87,600 (6 per day, 1 hour each cycle) Assume vessel temperature is at 59° F***	
Nozzle Loads				***Nozzles shall be designed or reinforced to meet the Loads in 24590-WTP-3PS-MV00-T0001, Table A-2***	

Notes for Cyclic Data

- ***Cycle increase: The Seller must increase the numbers of operational cycles given above by 10% to account for commissioning duty unless otherwise noted.***
- ***Nozzles N06/N06A, N07/N07A, N29/N29A, N30/N30A, and associated piping connected to ejectors shall be fatigue assessed/analyzed for pressure/temperature cycles over 40 years from 0 psig at 59°F to 109 psig at 358°F temperature. The pressure cycles shall coincide with temperature cycles.***
- ***Nozzles N04, N32, are spares***
- ***Heat Transfer summary for vessel:*** 5
  - ***A. Cell Ambient Temperature: Min. 59° F, Max. 95° F***
  - ***B. Only one ejector can operate at a time due to system limitations, steam rack only supports one ejector.***

BECHTEL	**MECHANICAL DATA SHEET: VESSEL**	**PLANT ITEM No.** ***24590-HLW-MV-HDH-VSL-00003***

PLEASE NOTE THAT SOURCE , SPECIAL NUCLEAR AND BYPRODUCT MATERIALS, AS DEFINED IN THE ATOMIC ENERGY ACT OF 1954 (AEA), ARE REGULATED AT THE U.S. DEPARTMENT OF ENERGY (DOE) FACILITIES EXCLUSIVELY BY DOE ACTING PURSUANT TO ITS AEA AUTHORITY. DOE ASSERTS, THAT PURSUANT TO THE AEA, IT HAS SOLE AND EXCLUSIVE RESPONSIBILITY AND AUTHORITY TO REGULATE SOURCE, SPECIAL NUCLEAR, AND BYPRODUCT MATERIALS AT DOE-OWNED NUCLEAR FACILITIES. INFORMATION CONTAINED HEREIN ON RADIONUCLIDES IS PROVIDED FOR PROCESS DESCRIPTION PURPOSES ONLY.

5

Screening / Evaluation Required? If yes per 24590-WTP-GPP-SREG-002, E&NS signature required below	X	Yes		No

5

Approval

Rev	Description	Vessel Engr	Checker	System Engr	E&NS	Reviewer	Approval	Date
0	Issued for Purchase	C. Slater	T. Galioto/ C. Slater	K. Minton	N/A	D. Yarbrough	M. Hoffmann	01/22/04
1	Issued for Supplemental Information to Vendor	B. Balakrishnan	T. Galioto/ C. Slater	U. Olivas	N/A	J. Rouse/ E. Isern	M. Hoffmann	11/30/04
2	Issued for Supplemental Information to Vendor	S. L. Lee	S. Cross/ C. Slater	U. Olivas	N/A	R. Peters/ E. Isern/ D. Adler	M. Hoffmann	04/11/05
3	Revised as Noted	S. L. Lee	R. Peter	S. Cross	N/A	E. Isern	M. Hoffman	5/27/05
4	Revised as Noted Incorporated 24590-HLW-MVN-HDH-00009 24590-WTP-M6N-M80T-00002 24590-WTP-M6N-M80T-00005	R. Wight	M. Seed	M. Kufahl	B. Dubiel	J. Julyk	J. Julyk	10/26/10
5	Revised as Noted	R. Wight R. Wight	M. Seed M Seed	R. Peters Robert Peters	B. Dubiel B Dubiel	NA	D. Wilsey D J Wilsey	5/6/11

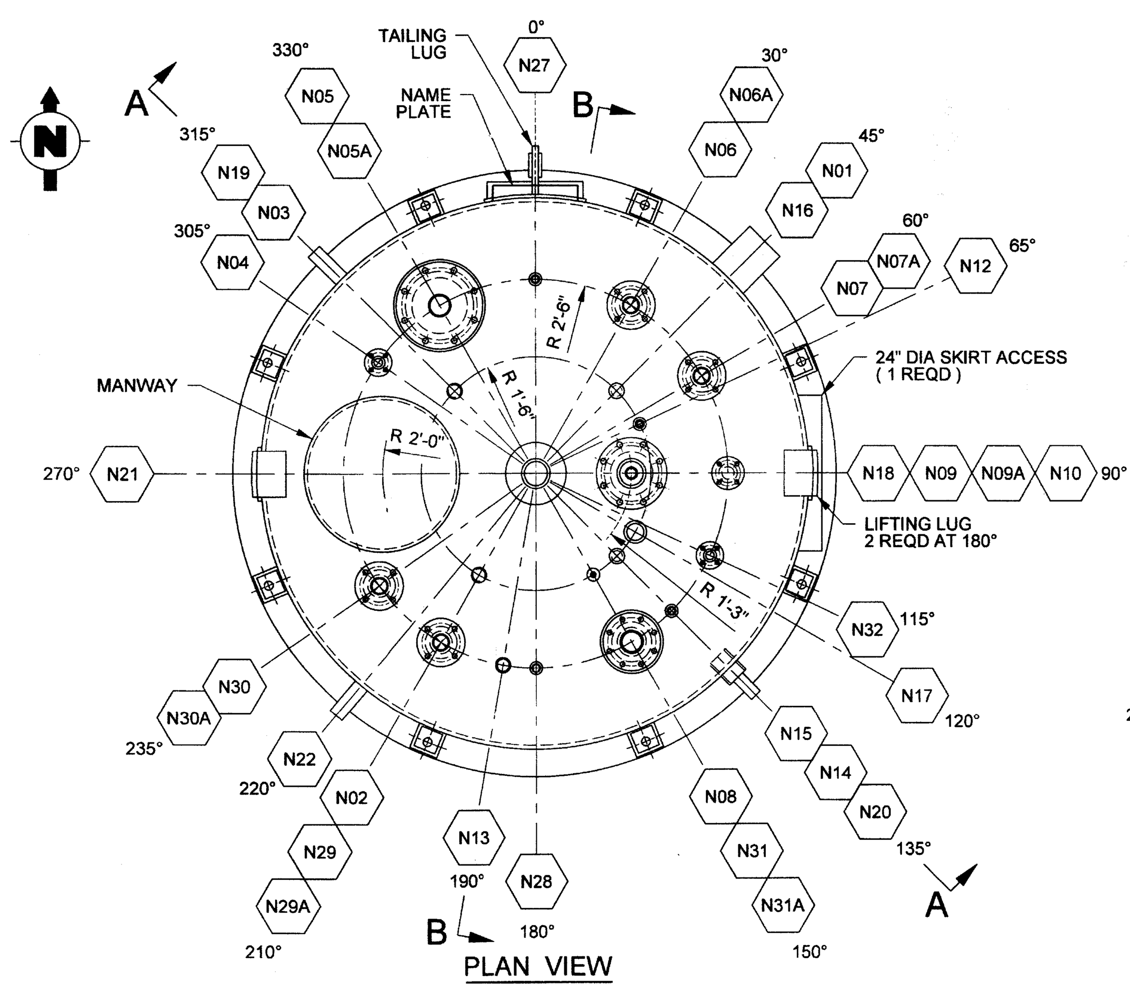

PLAN VIEW

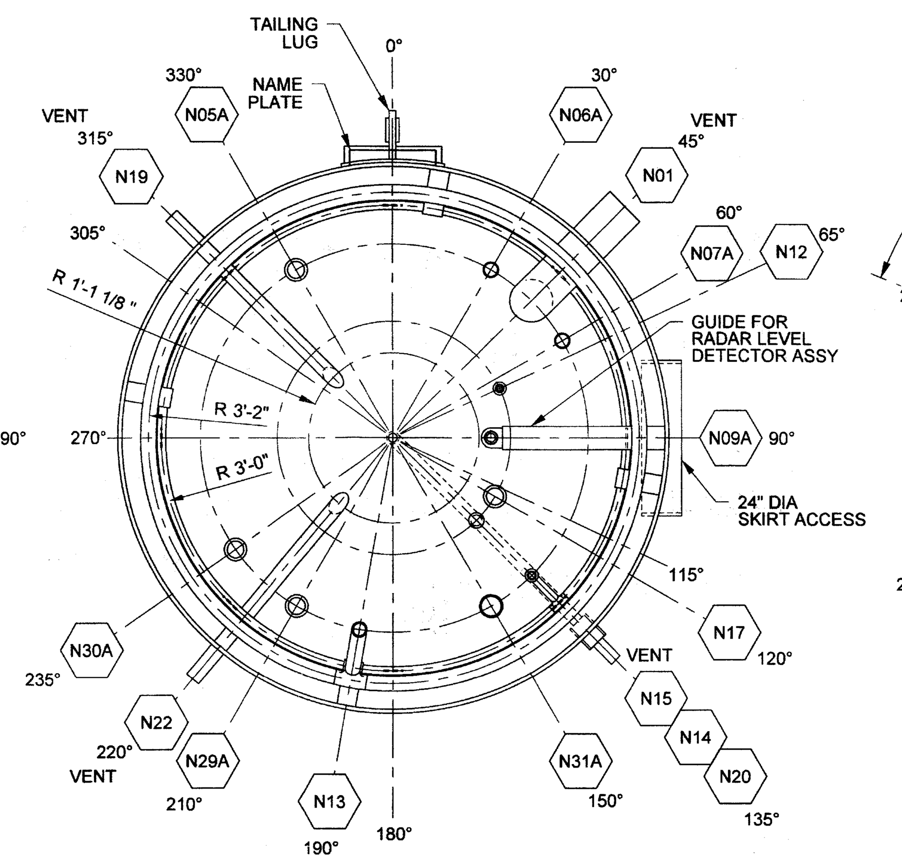

SECTION C - C

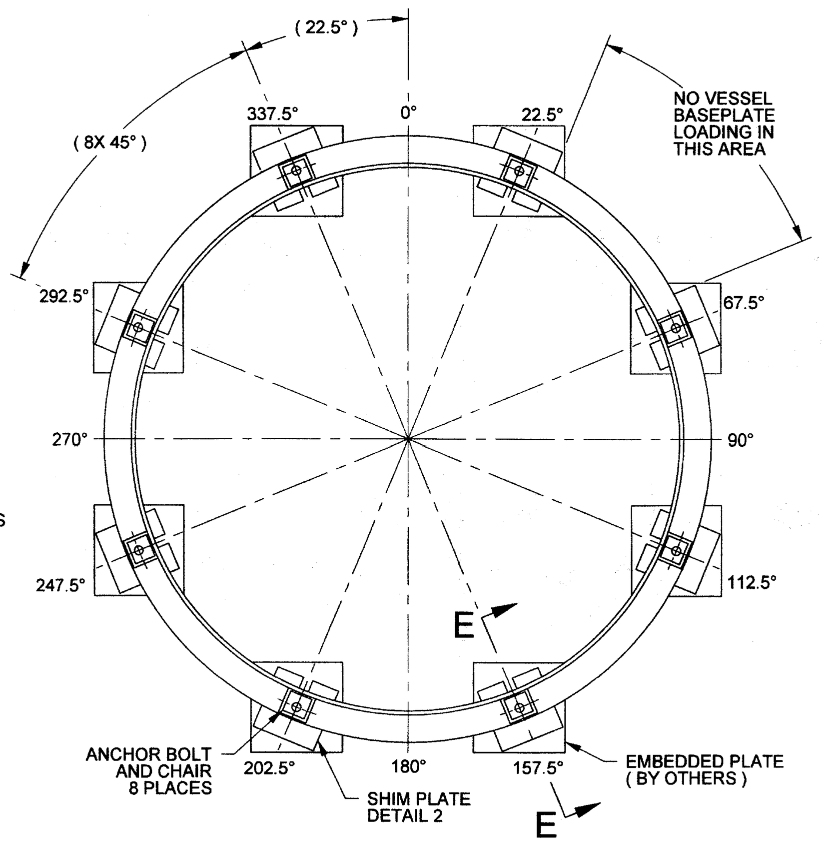

SECTION D - D

NOZZLE	SIZE	RATING	SERVICE / REMARKS	Z DIM	DETAIL / REFERENCE	CONNECTION
N01	6"	120S	OVERFLOW	16'-3"	24590-WTP-MV-M59T-00016001 DET 2	6" - 10S
N02	2"	80S	SPARE	18'-8"	24590-WTP-MV-M59T-00016001 DET 2	CAPPED
N03	2"	80S	SPARE	18'-8"	24590-WTP-MV-M59T-00016001 DET 2	CAPPED
N04	2" OD x 1"	MACH; 150 lb	SPARE	18'-8"	24590-WTP-MV-M59T-00016001 DET 5	CAPPED
N05	8"	150 lb	HDH-VSL-00002 OVERFLOW INLET	18'-8"	24590-WTP-MV-M59T-00016001 DET 9	8"-150 lb RF WN
N05A	3"	150 lb	N05 INSERT PIPE	19'-0"	DET 4; 24590-WTP-MV-M59T-00016001 DET 9	3"-150 lb RF WN
N06	3"	150 lb	INLET FROM EJECTOR 3A	18'-8"	24590-WTP-MV-M59T-00016001 DET 9	3"-150 lb RF WN
N06A	2"	150 lb	N06 INSERT PIPE	19'-2"	DET 4; 24590-WTP-MV-M59T-00016001 DET 9	2"-150 lb RF WN
N07	3"	150 lb	INLET FROM EJECTOR 3B	18'-8"	24590-WTP-MV-M59T-00016001 DET 9	3"-150 lb RF WN
N07A	2"	150 lb	N07 INSERT PIPE	19'-2"	DET 4; 24590-WTP-MV-M59T-00016001 DET 9	2"-150 lb RF WN
N08	2" OD x ½"	MACHINED	HYDROGEN PEROXIDE INLET	18'-8"	24590-WTP-MV-M59T-00016001 DET 5	½" - 40S
N09	6"	150 lb	RADAR LEVEL	19'-0"	DETAIL 6	6"-150 lb RF WN
N09A	1 1/2"	150 lb	N09 INSERT PIPE	19'-6"	DETAIL 6	6"-150 lb RF WN
N10	1/2"	150 lb	PRESSURE	18'-8"	24590-WTP-MV-M59T-00016001 DET 5	½" - 40S
N12	1"	MACHINED	TEMPERATURE	18'-8"	24590-WTP-MV-M59T-00007 ASSY 1 DET 5	1" - 40S
N13	2"	80S	NaOH; PL WASH; WASH RING	18'-8"	24590-WTP-MV-M59T-00016001 DET 3	2" - 40S
N14	2" OD x 1"	MACHINED	PL AIR INLET TO SPARGER	18'-8"	24590-WTP-MV-M59T-00016001 DET 5	1" - 40S
N15	2"	160S	SPARE	18'-8"	24590-WTP-MV-M59T-00016001 DET 2	CAPPED
N16	2"	160S	SPARE	18'-8"	24590-WTP-MV-M59T-00016001 DET 2	CAPPED
N17	3"	160S	INLET (DIP LEG)	18'-8"	24590-WTP-MV-M59T-00016001 DET 4	3" - 40S
N18	4"	120S	VESSEL VENT	18'-8"	24590-WTP-MV-M59T-00016001 DET 1	4" - 40S
N19	2"	160S	OUTLET TO RLD-EJCTR-00002A	0'-8"	24590-WTP-MV-M59T-00016001 DET 3	2" - 40S
N20	1 1/2"	160S	OUTLET TO RLD-EJCTR-00057	2'-6"	24590-WTP-MV-M59T-00016001 DET 1	1 ½" - 40S
N21	24"	PLATE	MANWAY	18'-8"	24590-WTP-MV-M59T-00017 DET 1	CAPPED
N22	2"	160S	OUTLET TO RLD-EJCTR-00002B	0'-8"	24590-WTP-MV-M59T-00016001 DET 3	2" - 40S
N23			DELETED			
N24			DELETED			
N25			DELETED			
N26			DELETED			
N27	2" OD x 1"	MACHINED	SPARE	18'-8"	24590-WTP-MV-M59T-00016001 DET 5	CAPPED
N28	2" OD x 1"	MACHINED	SPARE	18'-8"	24590-WTP-MV-M59T-00016001 DET 5	CAPPED
N29	3"	150 lb	INL FROM HDH-EJECTR-56B	18'-8"	DET 4; 24590-WTP-MV-M59T-00016001 DET 11	3"-150 lb RF WN
N29A	2"	150 lb	N29 INSERT PIPE	19'-2"	24590-WTP-MV-M59T-00016001 DET 11	2"-150 lb RF WN
N30	3"	150 lb	INL FROM HDH-EJECTR-56A	18'-8"	DET 4; 24590-WTP-MV-M59T-00016001 DET 11	3"-150 lb RF WN
N30A	2"	150 lb	N30 INSERT PIPE	19'-2"	24590-WTP-MV-M59T-00016001 DET 11	2"-150 lb RF WN
N31	4"	150 lb	HDH-VSL-00004 OVERFLOW	18'-8"	DET 4; 24590-WTP-MV-M59T-00016001 DET 9	4"-150 lb RF WN
N31A	3"	150 lb	N31 INSERT PIPE	19'-0"	24590-WTP-MV-M59T-00016001 DET 9	3"-150 lb RF WN
N32	2" OD x 1"	MACH; 150 lb	SPARE	18'-8"	24590-WTP-MV-M59T-00016001 DET 5	CAPPED

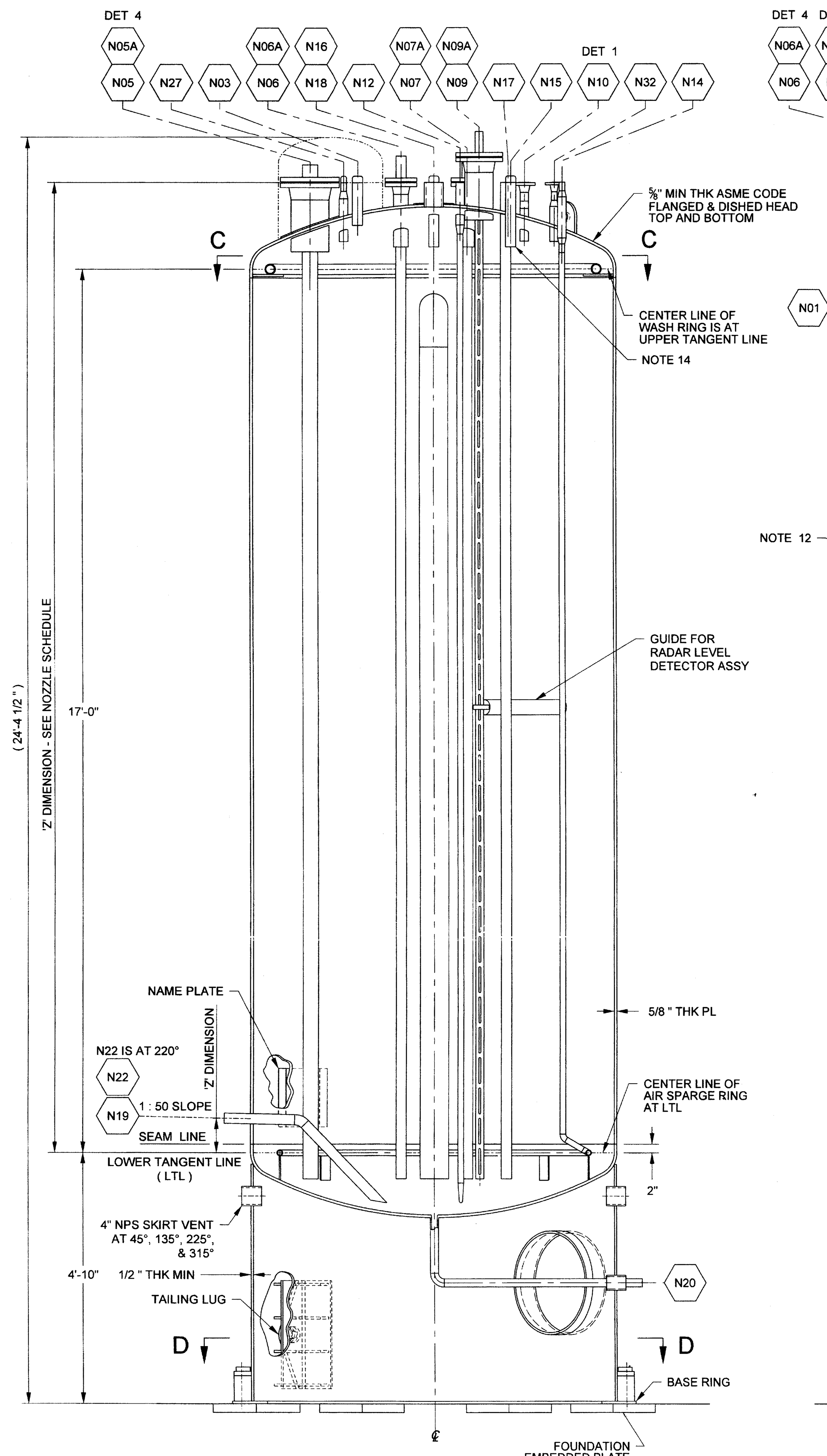

SECTION A - A

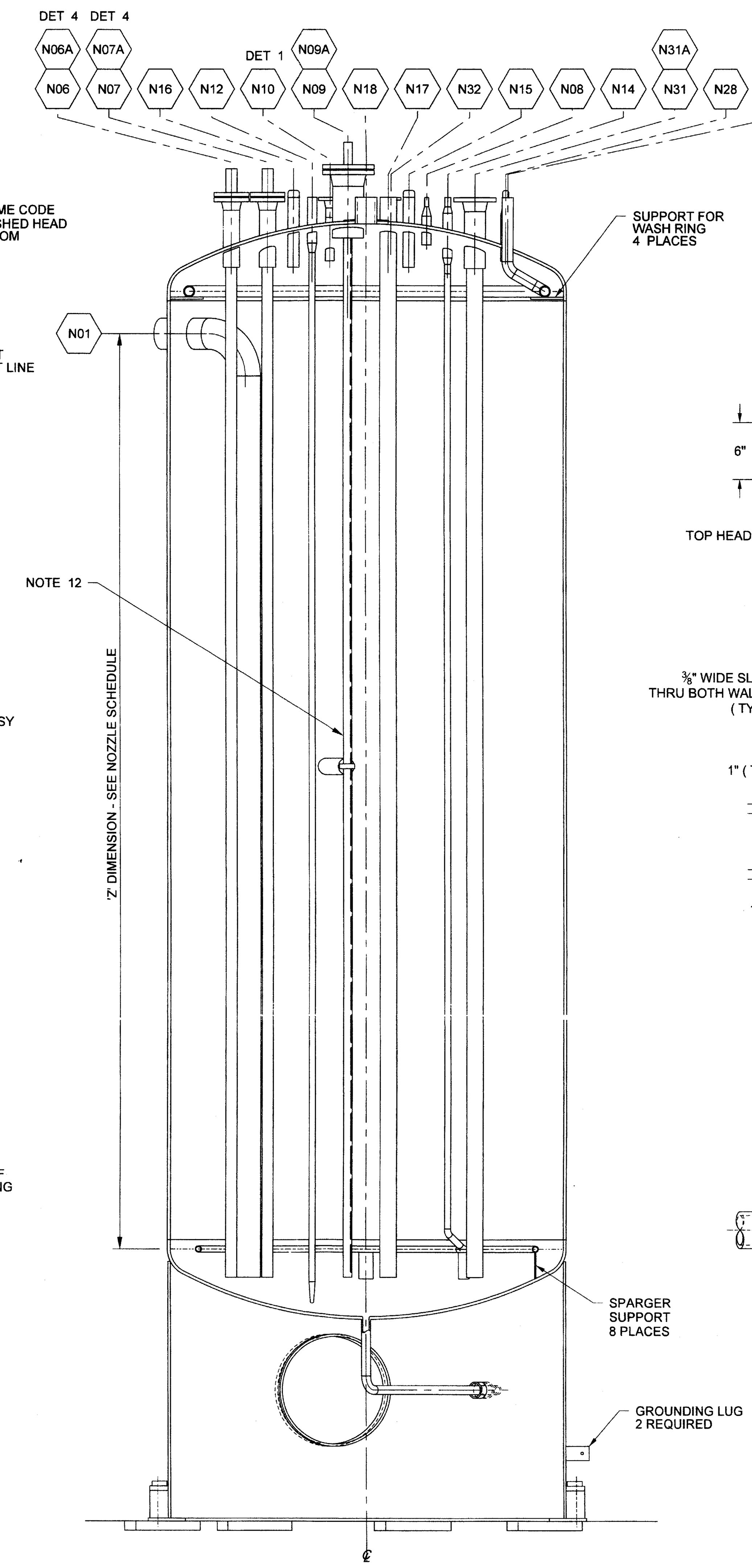

SECTION B - B

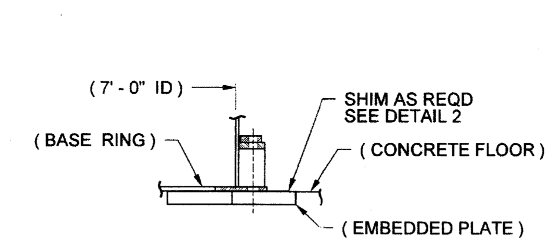

SECTION E - E

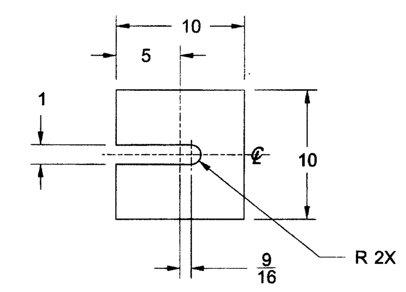

DETAIL 2

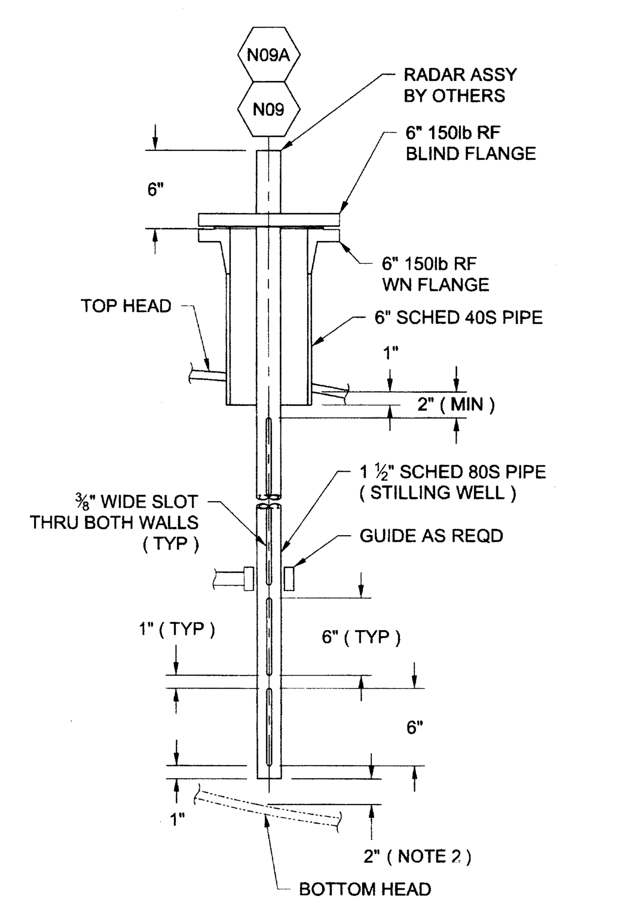

DETAIL 6
NOZZLE 'N09A' STILLING WELL

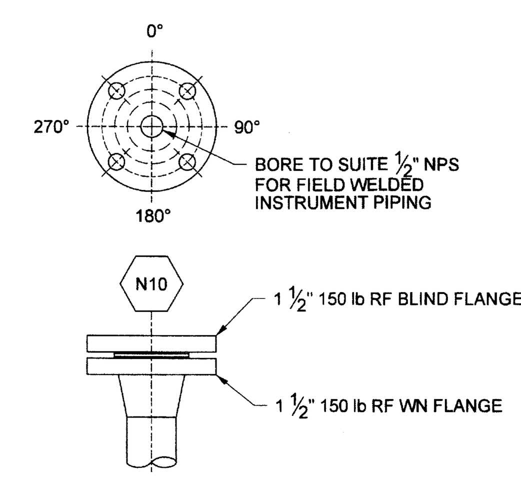

DETAIL 1
(NOZZLE 'N10')

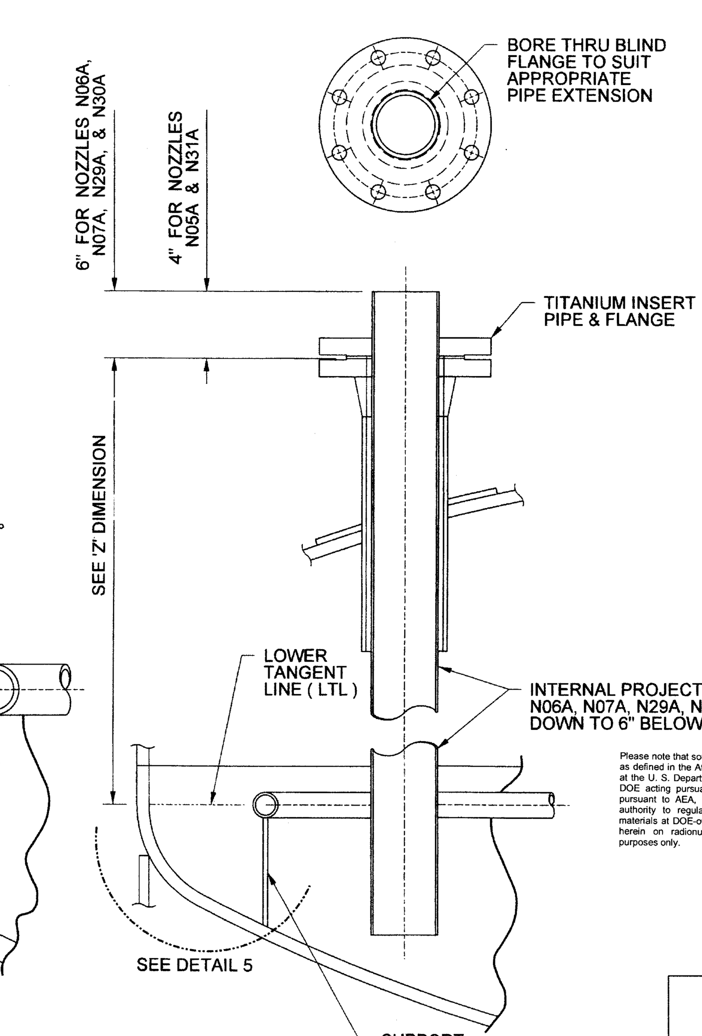

DETAIL 4

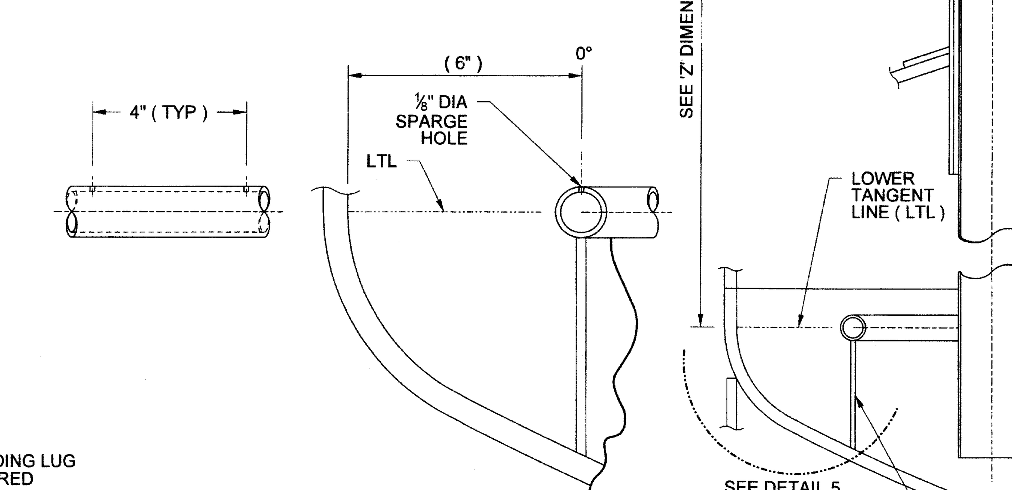

DETAIL 5
AIR SPARGER STANDOFF
(SPARGE RING SUPPORT)
(SEE NOTE 7)

GENERAL NOTES (UNLESS OTHERWISE SPECIFIED)

1. ALL INTERNALS SHALL BE DESIGNED, PROVIDED, AND INSTALLED BY SELLER.
2. CLEARANCE OF DIP PIPES FROM BOTTOM HEAD IS 2".
3. 'Z' DIMS ARE MEASURED FROM THE LOWER TANGENT LINE (LTL). THE 'Z' DIMS OF SHELL (SIDE) NOZZLES ARE MEASURED FROM THE LTL TO THE CENTER OF THE NOZZLE FACE.
4. ALL FLANGES (EXCEPT BLIND FLANGES) ARE 150 lb RAISED FACE (RF) WELD NECK (WN). BLIND FLANGES ARE 150 lb RF. BOLT HOLES SHALL STRADDLE NORMAL VESSEL CENTER LINE.
5. SELLER SHALL PROVIDE (8) SHIM PACKS, EACH COMPRISING OF:
   (2) ¼" THICK PLATES
   (1) ⅛" THICK PLATE
   (2) 1/16" THICK PLATES
   THE SKIRT SHALL BE SUPPORTED BY THE SHIM PLATES SPACED PER THE EMBEDDED PLATE PLAN VIEW (SECTION D-D).
6. SELLER SHALL SIZE ANCHOR BOLTS & CHAIRS PER REF DWG 24590-WTP-MV-M59T-00026. BUYER SHALL PROVIDE & WELD ANCHOR BOLTS TO A240 304L PLATES EMBEDDED IN CONCRETE FLOOR. SELLER SHALL SIZE ANCHOR BOLTS USING MATERIAL PROPERTIES OF THE EMBEDDED PLATE.
7. HOLES SHALL BE DRILLED AFTER BENDING PIPE. SPARGE HOLES SHALL BE SPACED AT 4 HOLES PER FOOT. SPARGE RING SUPPORTS SHALL BE A MINIMUM WIDTH OF 2" USING FLAT BAR AT ¼" MINIMUM THICKNESS & TWICE THE CORROSION THICKNESS. PIPE SHALL BE 1" DIA (NPS) SCHED 40S. SUPPORTS SHALL BE SAME MATERIAL AS THE BOTTOM HEAD ON MECHANICAL DATA SHEET 24590-HLW-MVD-HDH-00003.
8. GROUNDING LUG DETAILS PER REF DWG 24590-WTP-MV-M59T-00012.
9. INCORPORATED THE FOLLOWING DOCUMENTS (CHANGE NOTICES): HLW-MVN-HDH-00005, HLW-MVN-HDH-00006, HLW-MVN-HDH-00007, WTP-M6N-M80T-00003.
10. REVISED / ADDED / DELETED:
    a) DECREASED THE INTERNAL PROJECTION OF NOZZLES N15 & N16 FROM 2" FROM THE INSIDE SURFACE OF THE BOTTOM HEAD TO 2" FROM THE INSIDE SURFACE OF THE TOP HEAD.
    b) ADDED SPARGER AND SPARGER SUPPORT INFORMATION TO DETAIL 4.
    c) ADDED RADAR LEVEL DETECTION SYSTEM TO NOZZLE N09 (SEE NOTE 12).
    d) UPDATED NOZZLE INFORMATION TO REFLECT ACTUAL.
    e) EXTENSIVE REVISION, NO CLOUDS REQUIRED.
    f) UPDATED NOZZLES N04 & N02 FROM CONDENSATE NOZZLES TO SPARES.
11. CONTENTS OF THIS DOCUMENT ARE DANGEROUS WASTE PERMIT AFFECTING.

NOTES 12-14 APPLY DIRECTLY TO POST-STAMPING VESSEL ALTERATIONS. USE OTHER NOTES AS APPLICABLE.

12. INSTALL STILLING WELL AS PART OF RADAR LEVEL DETECTION IN N09.
13. DRILL A ⅜" DIA HOLE IN THE DIP PIPES CONNECTED TO NOZZLES N06, N07, N17, N29, & N30. THIS HOLE SHALL BE LOCATED IN THE VESSEL HEAD SPACE ABOVE THE OVERFLOW LEVEL OF THE VESSEL. THESE ARE ANTI-SIPHON HOLES FOR THE HDH EJECTORS AND HDH-VSL-00001 DIP PIPE INLETS.
14. TERMINATE THE DIP LEGS OF NOZZLES 15 & 16 ABOVE THE VESSEL OVERFLOW LEVEL.

HOLDS

1. 1 - 7 DELETED

THIS DRAWING MUST BE READ IN CONJUNCTION WITH THE MECHANICAL DATA SHEET 24590-HLW-MVD-HDH-00003

REFERENCE DRAWINGS

DRAWING NUMBER	REV	TITLE
24590-HLW-M6-HDH-00002	4	P&ID - HLW CANISTER DECONTN HANDLING
24590-WTP-MV-M59T-00001	4	PRESSURE VESSEL TOLERANCES STD DETAILS
24590-WTP-MV-M59T-00007	3	THERMOWELL CONNECTION STANDARD DETAILS
24590-WTP-MV-M59T-00011	2	WASH RINGS STANDARD DETAILS
24590-WTP-MV-M59T-00016001	3	VESSEL CONNECTIONS STD DETAILS SH 1 OF 3
24590-WTP-MV-M59T-00016002	2	VESSEL CONNECTIONS STD DETAILS SH 2 OF 3
24590-WTP-MV-M59T-00016003	1	VESSEL CONNECTIONS STD DETAILS SH 3 OF 3
24590-WTP-MV-M59T-00017	1	VESSEL INSPECTION MANWAY STANDARD DETAILS
24590-WTP-MV-M59T-00012	1	GROUNDING LUG STD DETAILS
24590-WTP-MV-M59T-00009	2	LIFTING LUG STANDARD DETAILS
24590-WTP-MV-M59T-00010	2	TAILING LUG STANDARD DETAILS
24590-HLW-MVD-HDH-00003	3	MECHANICAL DATA SHEET
24590-WTP-MV-M59T-00018	3	VESSEL NAMEPLATE STANDARD DETAILS
24590-WTP-MV-M59T-00026	1	ANCHOR BOLT CHAIR DETAILS FOR VERT VESSELS

Please note that source, special nuclear, and byproduct materials, as defined in the Atomic Energy Act of 1954 (AEA) are regulated at the U. S. Department of Energy (DOE) facilities exclusively by DOE acting pursuant to its AEA authority. DOE asserts that pursuant to AEA, it has sole and exclusive responsibility and authority to regulate source, special nuclear, and byproduct materials at DOE-owned nuclear facilities. Information contained herein on radionuclides is provided for process description purposes only.

REVISION HISTORY

REV	DESCRIPTION	ORG	CHKD	RVWD	APVD	DATE
1	EXTENSIVE REVISION, NO CLOUDS REQD (SEE NOTE 9) RW 11/2/10	RW	MAS	Jm	JJ	10/27/10
0	ISSUED FOR PURCHASE	MA-KM	TG-CS	MH	DW	1-22-2004

CM
QUALITY DESIGNATOR

ISSUED BY RPP-WTP PDC
ISSUE STAMP

PROJECT No.	24590	
SITE	HANFORD	
AREA	200E	
BUILDING No.	30	
	BY	DATE
ORIGINATOR	ARULAPALAM/MINTON	01-15-2004
CHECKER	GALIOTO/SLATER	01-21-2004
APPROVER	M. HOFFMAN	01-22-2004
REVIEWER	D. YARBROUGH	01-21-2004

CONTENT APPLICABLE TO ALARA? [X] YES [ ] NO
ADR NO. 24590-WTP-ADR-M-03-008 REV: 2
ENS SCREENING REQUIRED? [ ] YES [X] NO ENS INITIAL IF YES

BECHTEL
RIVER PROTECTION PROJECT
WASTE TREATMENT PLANT
2435 STEVENS CENTER PLACE
RICHLAND, WA 99354

CONTRACT No: DE-AC27-01RV14136

EQUIPMENT ASSEMBLY WASTE NEUTRALIZATION VESSEL HDH-VSL-00003

SCALE: NONE
24590-HLW-MV-HDH-00003
REV 1

SCREENING IS REQUIRED FOR DRAWING TYPES IDENTIFIED IN 24590-WTP-GPP-SREG-002
'E' SIZE - 44x34
COMPUTER GENERATED - MANUAL DESIGN CHANGES NOT PERMITTED
R11296291

Attachment 1: Page 1 of 2
REFERENCES for Data Sheet: 24590-HLW-MVD-HDH-00003, Rev. 5
Component Tag No(s): 24590-HLW-MV-HDH-VSL-00003

(For BNI Use Only)

Data	Document #	Rev	Document Title
Quality Level	24590-HLW-M6-HDH-00002	4	*P&ID HLW Canister Decontamination Handling System (CM)*
Seismic Category	24590-HLW-M6-HDH-00002	4	*P&ID HLW Canister Decontamination Handling System (HI)*
	24590-WTP-PSAR-ESH-01-002-04	04S	*Preliminary Documented Safety Analysis; HLW Facility Specific Information (Table 3A-10)*
Design Specific Gravity	24590-HLW-M4C-HDH-00001 (See Note 2)	2	*HLW Canister Decontamination Mass and Heat Balance (1.03) - Table 8.6, Stream 20*
Total Volume	24590-CM-POA-MVA0-00018-01-00002	00D	*COMPRESS Pressure Vessel Design Calculations (5315 gallons) p. 206*
Operating Volume	24590-HLW-M6C-HDH-00001	C	*HLW Waste Neutralization Vessel HDH-VSL-00003 Sizing Calculation (4650 gal)*
Inside Diameter	24590-HLW-M6C-HDH-00001	C	*HLW Waste Neutralization Vessel HDH-VSL-00003 Sizing Calculation (7')*
Length TL-TL	24590-HLW-MV-HDH-00003	1	*Equipment Assembly Waste Neutralization Vessel HDH-VSL-00003*
Design Pressure (internal & external)	24590-HLW-MVC-30-00001	B	*HLW Vessel Cyclic Datasheet Inputs (internal 1: external FV)*
Operating Pressure (internal & external)	24590-HLW-MVC-HDH-00005	A	*HDH Vessel and Tank Process data (external -5.8 psi: internal ATM)*
Operating Temp	24590-HLW-M4C-HDH-00001	1	*HLW Canister Decontamination Mass and Heat Balance (122.3 dF)*
Design Temp (max)	24590-WTP-GPG-M-017	8	*Design Parameters & Test Pressures for Equipment & Piping (Section 3.2 Operating Temperature + 25°F is 237°F)*
	24590-HLW-MVC-30-00001	B	*HLW Vessel Cyclic Datasheet Inputs (internal 1: external FV)*
Design Temp (min)	24590-WTP-DB-ENG-01-001	1P	*Basis of Design (59°F)*
Corrosion Allowance, Erosion allowance	24590-HLW-N1D-HDH-00005	4	*Corrosion Evaluation (0.04)*
Materials of Construction	24590-HLW-N1D-HDH-00005	4	*Corrosion Evaluation (304, Max 0.030% C)*
Cyclic Data (Vessel)	24590-HLW-MVC-30-00001 (See Note 2)	B	*HLW Vessel Cyclic Datasheet Inputs*
Nozzle Loads	24590-WTP-3PS-MV00-T0001	4	Pressure Vessel Design and Fabrication, Section 3.7 and Table A-2
Nozzle Design Temperatures and Pressures	24590-HLW-MVC-30-00001	B	*HLW Vessel Cyclic Datasheet Inputs*
	24590-HLW-M6X-HDH-00004	4	*Line List for 24590-HLW-M6-HDH-00002, Rev. 4*
Process Chemicals	24590-HLW-MVC-HDH-00005	4	*HDH Vessel and Tank Process Data Calculation*
Ejector Transfers/Steam Rack	24590-HLW-J3-HDH-00001 thru 00015 and 01001 thru 01010	0	*HDH System Logic Diagrams*
Cell Ambient Temperature	24590-HLW-U0D-W16T-00001	1	*HLW Room EEQ Data*

(For BNI Use Only)

Notes:

Note 1: Wind and snow design do not apply. This vessel is located in room H-B035, at the -14' level of the High Level Waste Facility.

Note 2: The specific gravity for cyclic data is taken from the cyclic data calculation dated 2007. The value of 1.18 is conservative and will be used for cyclic evaluation. The Mass and heat balance for the system 24590-HLW-M4C-HDH-00001 dated December 2010 shows that 83 gallons of 5M sodium hydroxide at 1.19 specific gravity is added to 2000 gallons of neutralizing waste in the last process step, resulting in a specific gravity of 1.03. This more accurate number is used for design specific gravity.

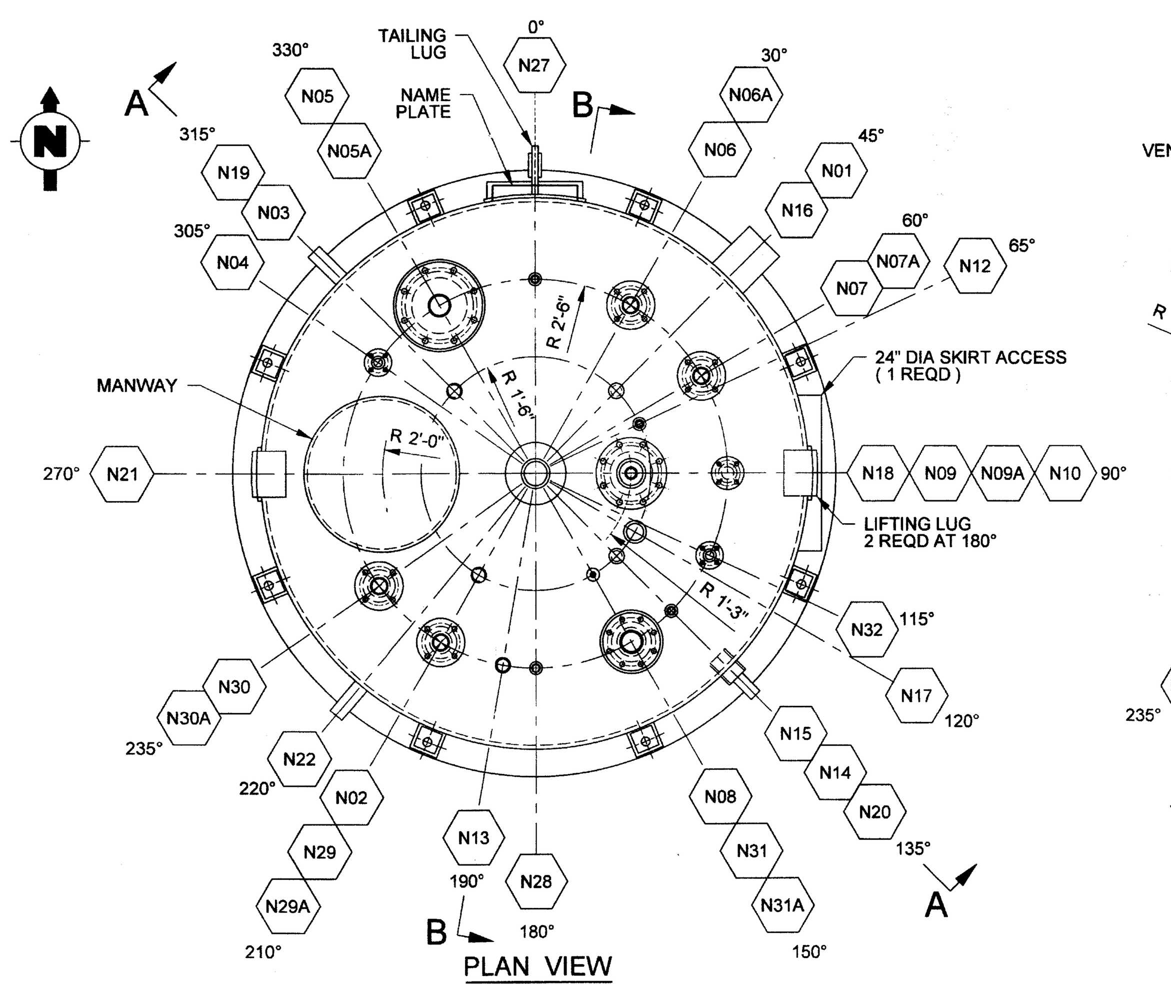

PLAN VIEW

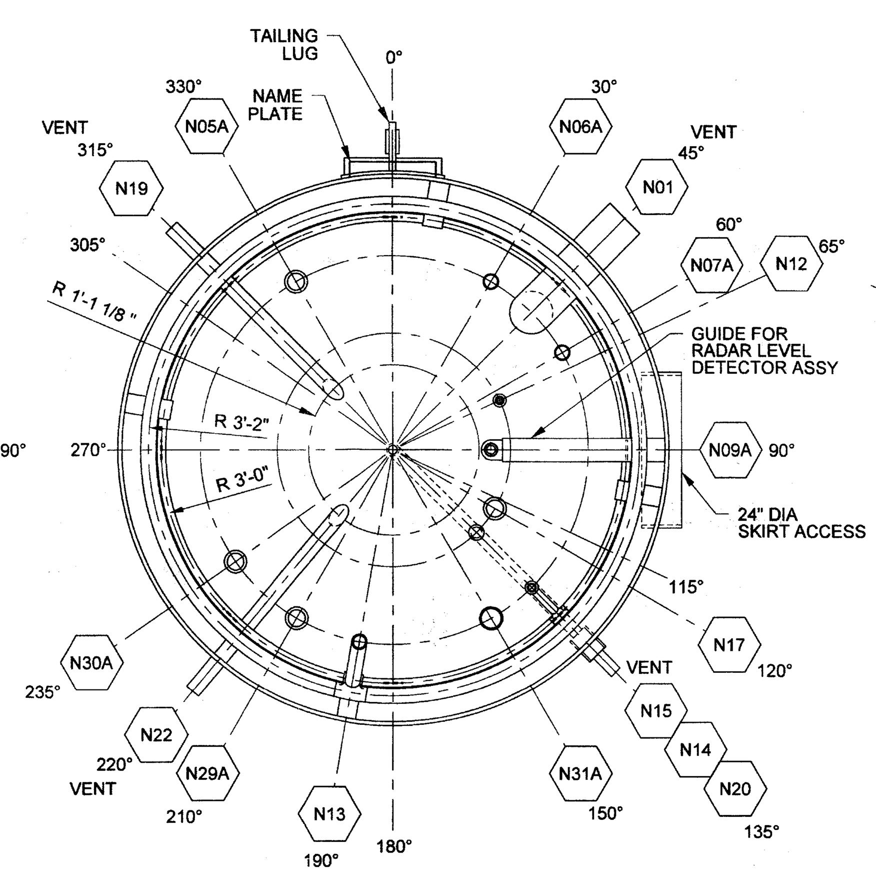

SECTION C - C

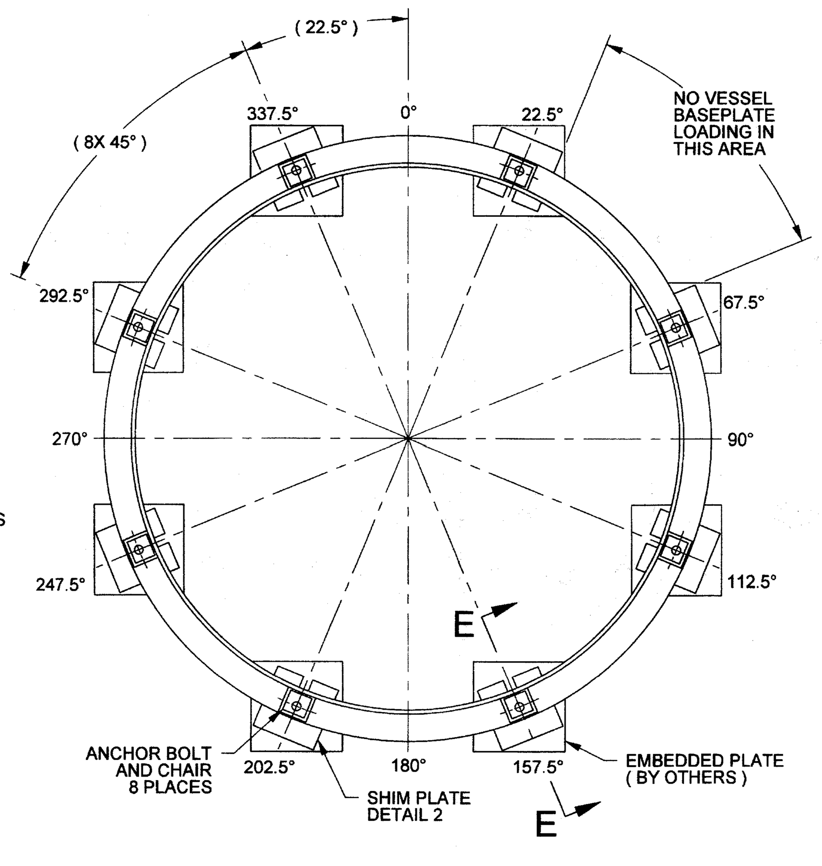

SECTION D - D

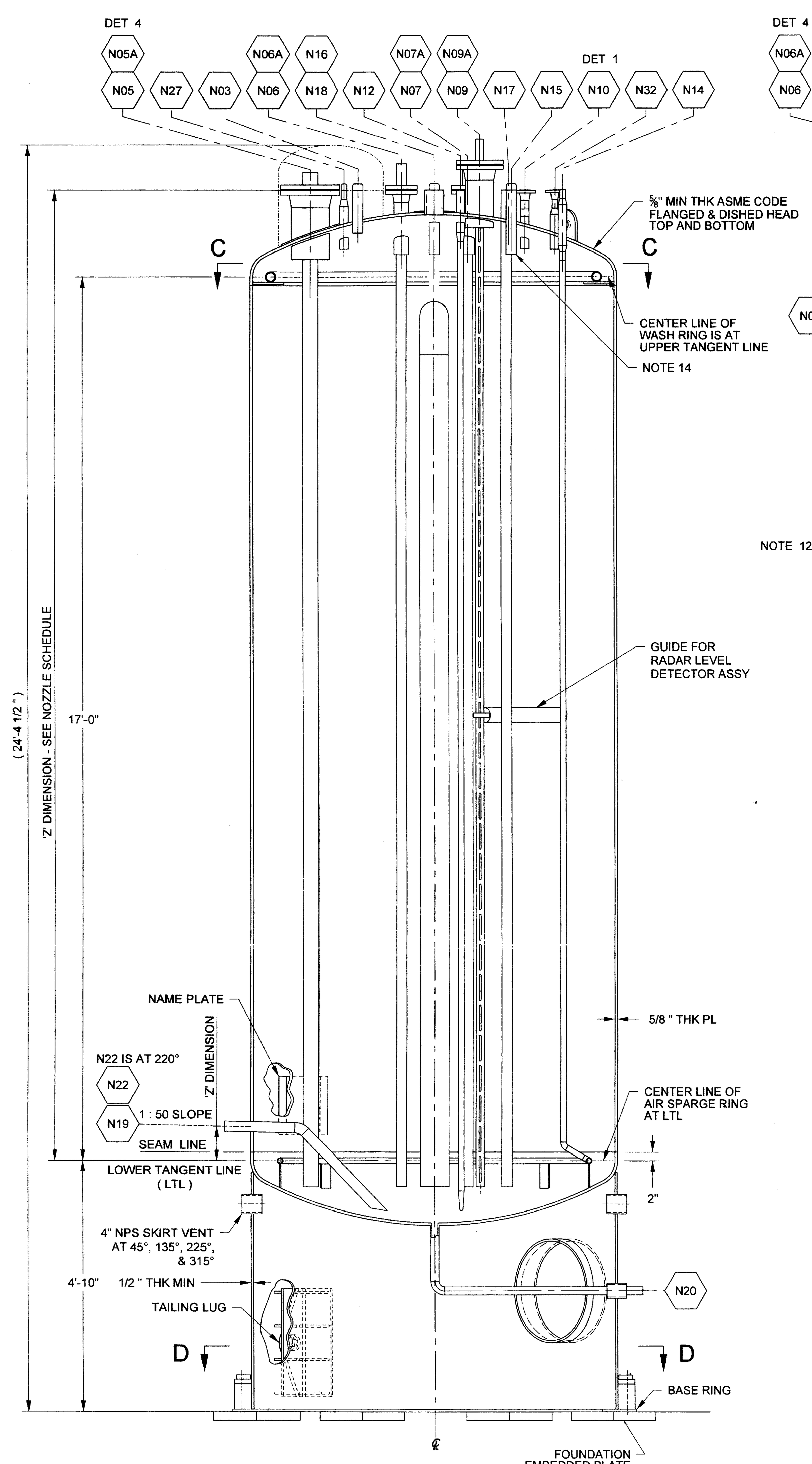

SECTION A - A

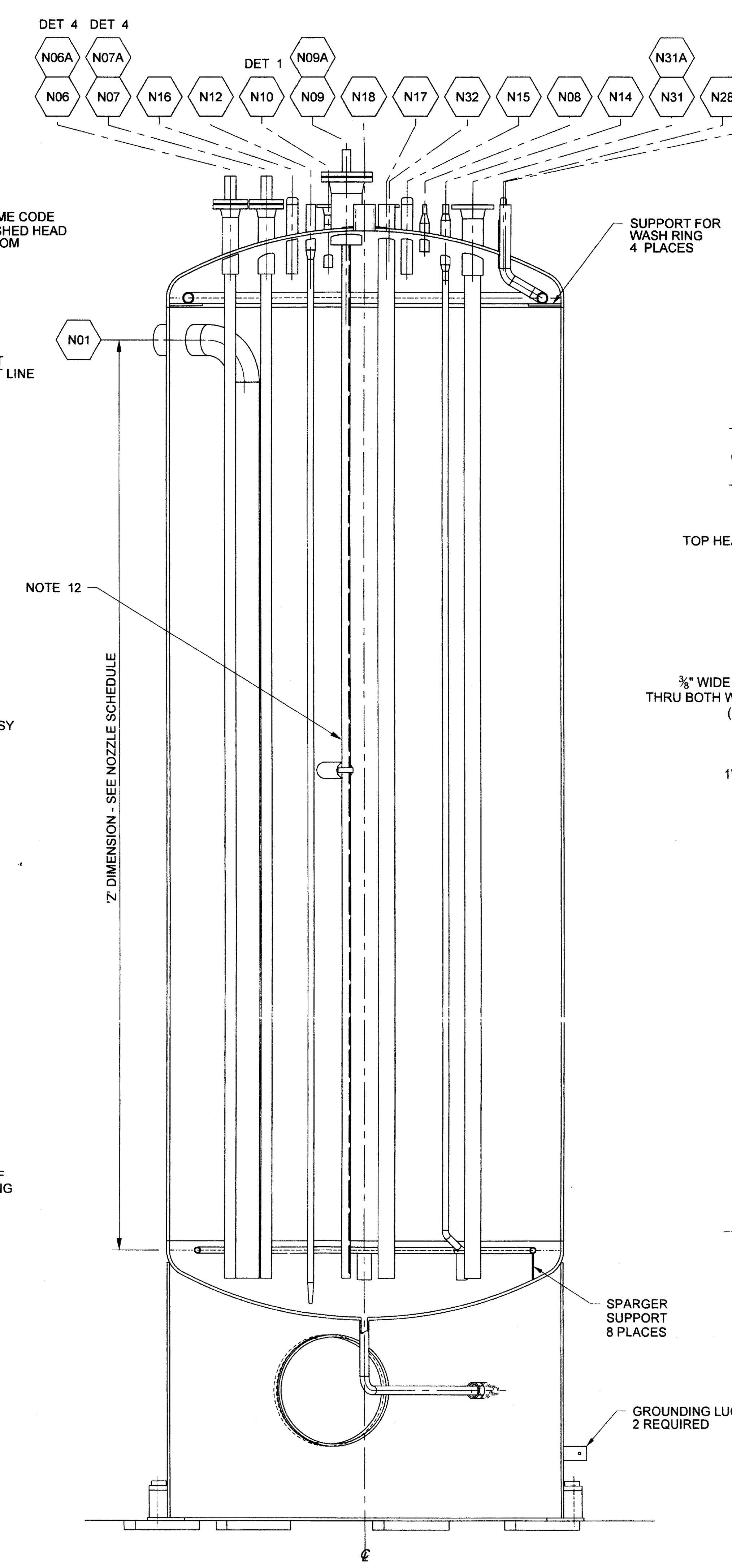

SECTION B - B

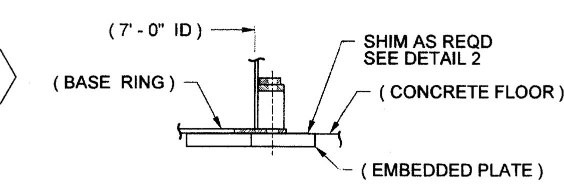

SECTION E - E

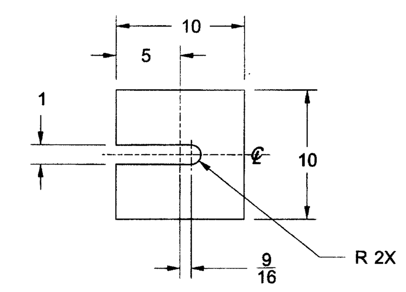

DETAIL 2

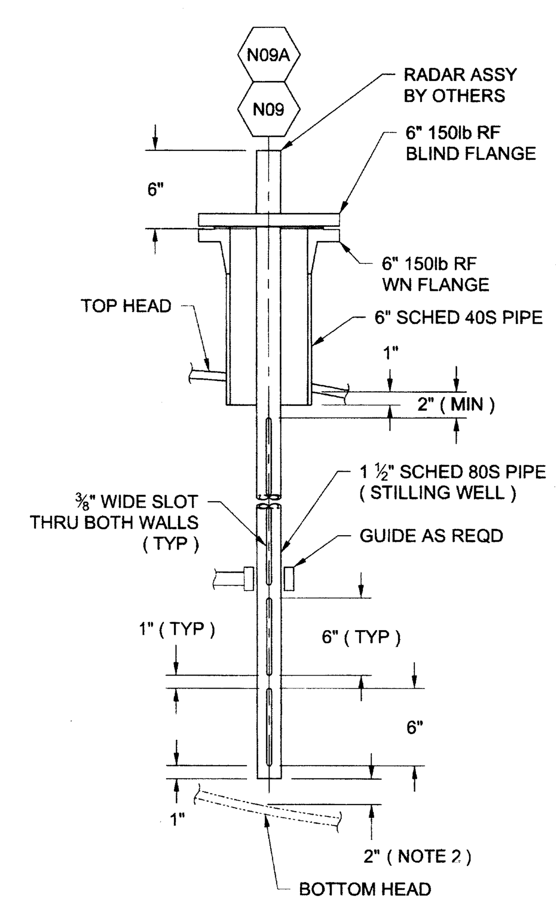

DETAIL 6
NOZZLE 'N09A' STILLING WELL

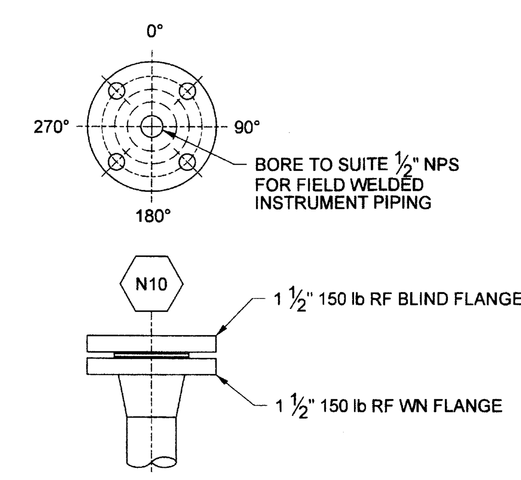

DETAIL 1
(NOZZLE 'N10')

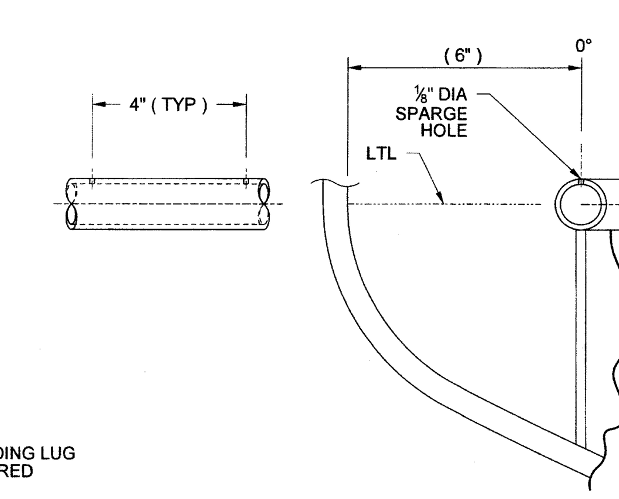

DETAIL 5
AIR SPARGER STANDOFF
(SPARGE RING SUPPORT)
(SEE NOTE 7)

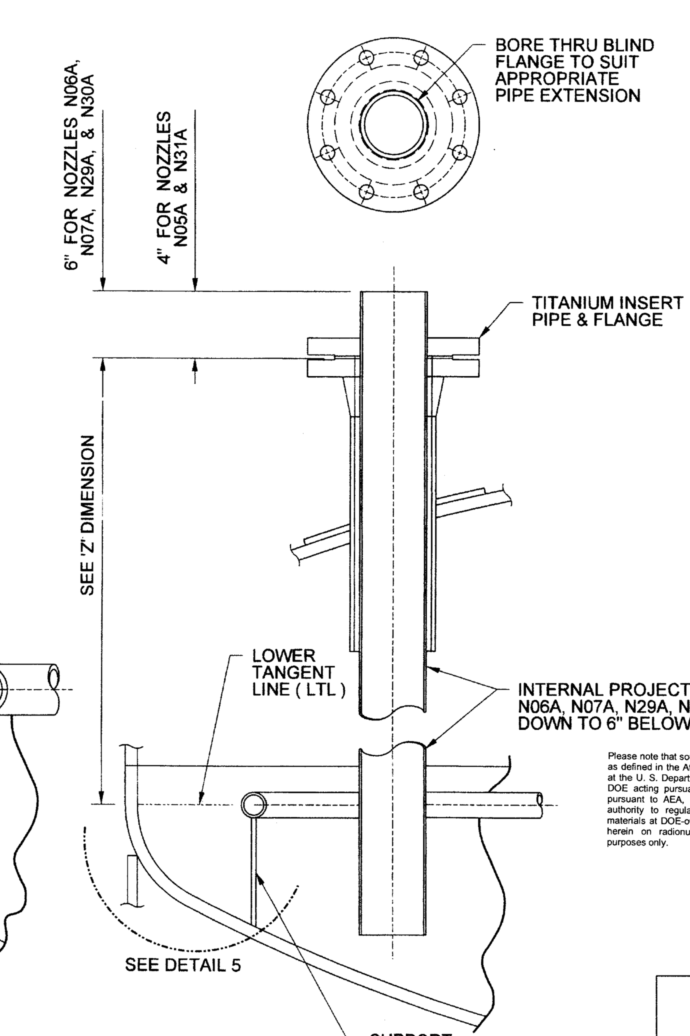

DETAIL 4

NOZZLE	SIZE	RATING	SERVICE / REMARKS	Z DIM	DETAIL / REFERENCE	CONNECTION
N01	6"	120S	OVERFLOW	16'-3"	24590-WTP-MV-M59T-00016001 DET 2	6" - 10S
N02	2"	80S	SPARE	18'-8"	24590-WTP-MV-M59T-00016001 DET 2	CAPPED
N03	2"	80S	SPARE	18'-8"	24590-WTP-MV-M59T-00016001 DET 2	CAPPED
N04	2" OD x 1"	MACH; 150 lb	SPARE	18'-8"	24590-WTP-MV-M59T-00016001 DET 5	CAPPED
N05	8"	150 lb	HDH-VSL-00002 OVERFLOW INLET	18'-8"	24590-WTP-MV-M59T-00016001 DET 9	8"-150 lb RF WN
N05A	3"	150 lb	N05 INSERT PIPE	19'-0"	DET 4; 24590-WTP-MV-M59T-00016001 DET 9	3"-150 lb RF WN
N06	3"	150 lb	INLET FROM EJECTOR 3A	18'-8"	24590-WTP-MV-M59T-00016001 DET 9	3"-150 lb RF WN
N06A	2"	150 lb	N06 INSERT PIPE	19'-2"	DET 4; 24590-WTP-MV-M59T-00016001 DET 9	2"-150 lb RF WN
N07	3"	150 lb	INLET FROM EJECTOR 3B	18'-8"	24590-WTP-MV-M59T-00016001 DET 9	3"-150 lb RF WN
N07A	2"	150 lb	N07 INSERT PIPE	19'-2"	DET 4; 24590-WTP-MV-M59T-00016001 DET 9	2"-150 lb RF WN
N08	2" OD x ½"	MACHINED	HYDROGEN PEROXIDE INLET	18'-8"	24590-WTP-MV-M59T-00016001 DET 5	½" - 40S
N09	6"	150 lb	RADAR LEVEL	19'-0"	DETAIL 6	6"-150 lb RF WN
N09A	1 1/2"	150 lb	N09 INSERT PIPE	19'-6"	DETAIL 6	6"-150 lb RF WN
N10	1/2"	150 lb	PRESSURE	18'-8"	24590-WTP-MV-M59T-00016001 DET 5	½" - 40S
N12	1"	MACHINED	TEMPERATURE	18'-8"	24590-WTP-MV-M59T-00007 ASSY 1 DET 5	1" - 40S
N13	2"	80S	NaOH; PL WASH; WASH RING	18'-8"	24590-WTP-MV-M59T-00016001 DET 3	2" - 40S
N14	2" OD x 1"	MACHINED	PL AIR INLET TO SPARGER	18'-8"	24590-WTP-MV-M59T-00016001 DET 5	1" - 40S
N15	2"	160S	SPARE	18'-8"	24590-WTP-MV-M59T-00016001 DET 2	CAPPED
N16	2"	160S	SPARE	18'-8"	24590-WTP-MV-M59T-00016001 DET 2	CAPPED
N17	3"	160S	INLET (DIP LEG)	18'-8"	24590-WTP-MV-M59T-00016001 DET 4	3" - 40S
N18	4"	120S	VESSEL VENT	18'-8"	24590-WTP-MV-M59T-00016001 DET 1	4" - 40S
N19	2"	160S	OUTLET TO RLD-EJCTR-00002A	0'-8"	24590-WTP-MV-M59T-00016001 DET 3	2" - 40S
N20	1 1/2"	160S	OUTLET TO RLD-EJCTR-00057	2'-6"	24590-WTP-MV-M59T-00016001 DET 1	1 ½" - 40S
N21	24"	PLATE	MANWAY	18'-8"	24590-WTP-MV-M59T-00017 DET 1	CAPPED
N22	2"	160S	OUTLET TO RLD-EJCTR-00002B	0'-8"	24590-WTP-MV-M59T-00016001 DET 3	2" - 40S
N23			DELETED			
N24			DELETED			
N25			DELETED			
N26			DELETED			
N27	2" OD x 1"	MACHINED	SPARE	18'-8"	24590-WTP-MV-M59T-00016001 DET 5	CAPPED
N28	2" OD x 1"	MACHINED	SPARE	18'-8"	24590-WTP-MV-M59T-00016001 DET 5	CAPPED
N29	3"	150 lb	INL FROM HDH-EJECTR-56B	18'-8"	DET 4; 24590-WTP-MV-M59T-00016001 DET 11	3"-150 lb RF WN
N29A	2"	150 lb	N29 INSERT PIPE	19'-2"	24590-WTP-MV-M59T-00016001 DET 11	2"-150 lb RF WN
N30	3"	150 lb	INL FROM HDH-EJECTR-56A	18'-8"	DET 4; 24590-WTP-MV-M59T-00016001 DET 11	3"-150 lb RF WN
N30A	2"	150 lb	N30 INSERT PIPE	19'-2"	24590-WTP-MV-M59T-00016001 DET 11	2"-150 lb RF WN
N31	4"	150 lb	HDH-VSL-00004 OVERFLOW	18'-8"	DET 4; 24590-WTP-MV-M59T-00016001 DET 9	4"-150 lb RF WN
N31A	3"	150 lb	N31 INSERT PIPE	19'-0"	24590-WTP-MV-M59T-00016001 DET 9	3"-150 lb RF WN
N32	2" OD x 1"	MACH; 150 lb	SPARE	18'-8"	24590-WTP-MV-M59T-00016001 DET 5	CAPPED

GENERAL NOTES (UNLESS OTHERWISE SPECIFIED)

1. ALL INTERNALS SHALL BE DESIGNED, PROVIDED, AND INSTALLED BY SELLER.
2. CLEARANCE OF DIP PIPES FROM BOTTOM HEAD IS 2".
3. 'Z' DIMS ARE MEASURED FROM THE LOWER TANGENT LINE (LTL). THE 'Z' DIMS OF SHELL (SIDE) NOZZLES ARE MEASURED FROM THE LTL TO THE CENTER OF THE NOZZLE FACE.
4. ALL FLANGES (EXCEPT BLIND FLANGES) ARE 150 lb RAISED FACE (RF) WELD NECK (WN). BLIND FLANGES ARE 150 lb RF. BOLT HOLES SHALL STRADDLE NORMAL VESSEL CENTER LINE.
5. SELLER SHALL PROVIDE (8) SHIM PACKS, EACH COMPRISING OF:
   (2) ¼" THICK PLATES
   (1) ⅛" THICK PLATE
   (2) 1⁄16" THICK PLATES
   THE SKIRT SHALL BE SUPPORTED BY THE SHIM PLATES SPACED PER THE EMBEDDED PLATE PLAN VIEW (SECTION D-D).
6. SELLER SHALL SIZE ANCHOR BOLTS & CHAIRS PER REF DWG 24590-WTP-MV-M59T-00026. BUYER SHALL PROVIDE & WELD ANCHOR BOLTS TO A240 304L PLATES EMBEDDED IN CONCRETE FLOOR. SELLER SHALL SIZE ANCHOR BOLTS USING MATERIAL PROPERTIES OF THE EMBEDDED PLATE.
7. HOLES SHALL BE DRILLED AFTER BENDING PIPE. SPARGE HOLES SHALL BE SPACED AT 4 HOLES PER FOOT. SPARGE RING SUPPORTS SHALL BE A MINIMUM WIDTH OF 2" USING FLAT BAR AT ¼" MINIMUM THICKNESS & TWICE THE CORROSION THICKNESS. PIPE SHALL BE 1" DIA (NPS) SCHED 40S. SUPPORTS SHALL BE SAME MATERIAL AS THE BOTTOM HEAD ON MECHANICAL DATA SHEET 24590-HLW-MVD-HDH-00003.
8. GROUNDING LUG DETAILS PER REF DWG 24590-WTP-MV-M59T-00012.
9. INCORPORATED THE FOLLOWING DOCUMENTS (CHANGE NOTICES): HLW-MVN-HDH-00005, HLW-MVN-HDH-00006, HLW-MVN-HDH-00007, WTP-M6N-M80T-00003.
10. REVISED / ADDED / DELETED:
    a) DECREASED THE INTERNAL PROJECTION OF NOZZLES N15 & N16 FROM 2" FROM THE INSIDE SURFACE OF THE BOTTOM HEAD TO 2" FROM THE INSIDE SURFACE OF THE TOP HEAD.
    b) ADDED SPARGER AND SPARGER SUPPORT INFORMATION TO DETAIL 4.
    c) ADDED RADAR LEVEL DETECTION SYSTEM TO NOZZLE N09 (SEE NOTE 12).
    d) UPDATED NOZZLE INFORMATION TO REFLECT ACTUAL.
    e) EXTENSIVE REVISION, NO CLOUDS REQUIRED.
    f) UPDATED NOZZLES N04 & N02 FROM CONDENSATE NOZZLES TO SPARES.
11. CONTENTS OF THIS DOCUMENT ARE DANGEROUS WASTE PERMIT AFFECTING.

NOTES 12-14 APPLY DIRECTLY TO POST-STAMPING VESSEL ALTERATIONS. USE OTHER NOTES AS APPLICABLE.

12. INSTALL STILLING WELL AS PART OF RADAR LEVEL DETECTION IN N09.
13. DRILL A ⅜" DIA HOLE IN THE DIP PIPES CONNECTED TO NOZZLES N06, N07, N17, N29, & N30. THIS HOLE SHALL BE LOCATED IN THE VESSEL HEAD SPACE ABOVE THE OVERFLOW LEVEL OF THE VESSEL. THESE ARE ANTI-SIPHON HOLES FOR THE HDH EJECTORS AND HDH-VSL-00001 DIP PIPE INLETS.
14. TERMINATE THE DIP LEGS OF NOZZLES 15 & 16 ABOVE THE VESSEL OVERFLOW LEVEL.

HOLDS

1. 1 - 7 DELETED

THIS DRAWING MUST BE READ IN CONJUNCTION WITH THE MECHANICAL DATA SHEET 24590-HLW-MVD-HDH-00003

REFERENCE DRAWINGS

DRAWING NUMBER	REV	TITLE
24590-HLW-M6-HDH-00002	4	P&ID - HLW CANISTER DECONTN HANDLING
24590-WTP-MV-M59T-00001	4	PRESSURE VESSEL TOLERANCES STD DETAILS
24590-WTP-MV-M59T-00007	3	THERMOWELL CONNECTION STANDARD DETAILS
24590-WTP-MV-M59T-00011	2	WASH RINGS STANDARD DETAILS
24590-WTP-MV-M59T-00016001	3	VESSEL CONNECTIONS STD DETAILS SH 1 OF 3
24590-WTP-MV-M59T-00016002	2	VESSEL CONNECTIONS STD DETAILS SH 2 OF 3
24590-WTP-MV-M59T-00016003	1	VESSEL CONNECTIONS STD DETAILS SH 3 OF 3
24590-WTP-MV-M59T-00017	1	VESSEL INSPECTION MANWAY STANDARD DETAILS
24590-WTP-MV-M59T-00012	1	GROUNDING LUG STD DETAILS
24590-WTP-MV-M59T-00009	2	LIFTING LUG STANDARD DETAILS
24590-WTP-MV-M59T-00010	2	TAILING LUG STANDARD DETAILS
24590-HLW-MVD-HDH-00003	3	MECHANICAL DATA SHEET
24590-WTP-MV-M59T-00018	3	VESSEL NAMEPLATE STANDARD DETAILS
24590-WTP-MV-M59T-00026	1	ANCHOR BOLT CHAIR DETAILS FOR VERT VESSELS

Please note that source, special nuclear, and byproduct materials, as defined in the Atomic Energy Act of 1954 (AEA) are regulated at the U. S. Department of Energy (DOE) facilities exclusively by DOE acting pursuant to its AEA authority. DOE asserts that pursuant to AEA, it has sole and exclusive responsibility and authority to regulate source, special nuclear, and byproduct materials at DOE-owned nuclear facilities. Information contained herein on radionuclides is provided for process description purposes only.

CM
QUALITY DESIGNATOR

REVISION HISTORY

REV	DESCRIPTION	ORG	CHKD	RVWD	APVD	DATE
1	EXTENSIVE REVISION, NO CLOUDS REQD (SEE NOTE 9) RW 11/2/10	RW	MAS	SM	JJ	10/27/10
0	ISSUED FOR PURCHASE	MA-KM	TG-CS	MH	DW	1-22-2004

ISSUED BY RPP-WTP PDC
ISSUE STAMP

PROJECT No.	24590
SITE	HANFORD
AREA	200E
BUILDING No.	30

RIVER PROTECTION PROJECT
WASTE TREATMENT PLANT
2435 STEVENS CENTER PLACE
RICHLAND, WA 99354

CONTRACT No: DE-AC27-01RV14136

	BY	DATE
ORIGINATOR	ARULAPALAM/MINTON	01-15-2004
CHECKER	GALIOTO/SLATER	01-21-2004
APPROVER	M. HOFFMAN	01-22-2004
REVIEWER	D. YARBROUGH	01-21-2004

EQUIPMENT ASSEMBLY
WASTE NEUTRALIZATION VESSEL
HDH-VSL-00003

CONTENT APPLICABLE TO ALARA? [X] YES [ ] NO
ADR NO. 24590-WTP-ADR-M-03-008 REV: 2
SRNS SCREENING REQUIRED? [ ] YES [X] NO ERNS INITIAL IF YES

SCALE: NONE
24590-HLW-MV-HDH-00003
REV 1

SCREENING IS REQUIRED FOR DRAWING TYPES IDENTIFIED IN 24590-WTP-GPP-SREG-002
'E' SIZE - 44x34
COMPUTER GENERATED - MANUAL DESIGN CHANGES NOT PERMITTED
R11296291

Quarter Ending June 30, 2011 24590-HLW-PCN-ENV-10-011

Hanford Facility RCRA Permit Modification Notification Form
Part III, Operating Unit 10
Waste Treatment and Immobilization Plant

Index

Page 2 of 2: Hanford Facility RCRA Permit, Part III, Operating Unit 10, Waste Treatment and Immobilization Plant
Update the Independent Qualified Registered Professional Engineer (IQRPE) Structural Integrity Assessment for HLW Secondary Containment in Appendix 10.11 of the Dangerous Waste Permit (DWP).

Submitted by Co-Operator:

Donna M Busche 5/11/11
D. M. Busche Date

Reviewed by ORP Program Office:

Thomas M. Brown for 6/24/2011
D. L. Noyes Date

Quarter Ending June 30, 2011

24590-HLW-PCN-ENV-10-011

Hanford Facility RCRA Permit Modification Notification Form

Unit:	Permit Part:
Waste Treatment and Immobilization Plant	**Part III, Operating Unit 10**

Description of Modification:

The purpose of this modification is to update the IQRPE Structural Integrity Assessment for HLW Secondary Containment in Appendix 10.11 of the DWP. The IQRPE report addresses secondary containment rooms and areas located at the HLW facility at El. -21 ft, 0 in., and 37 ft and replaces three reports currently included in the DWP.

The following IQRPE report is submitted to replace the documents in Appendix 10.11:

Appendix 10.11			
Replace:	24590-CM-HC4-HXYG-00138-01-08, Rev. 00B	With:	CCN: 208821, IA-3005092-000; IQRPE Structural Integrity Assessment Report for HLW Secondary Containment
	24590-CM-HC4-HXYG-00138-01-011, Rev. 00B		
	24590-CM-HC4-HXYG-00138-02-00042, Rev. 00A		

This modification requests Ecology approval and incorporation into the permit the above mentioned integrity assessment report. The report reflects the IQRPE's review of the following final design documents:

- General Arrangement Drawings
- Structural concrete forming, walls, sections, layouts, reinforcement, and embedment drawings
- Structural steel framing drawings
- Foundation, excavation, and geotechnical investigation, structural design criteria, codes, specifications, calculations, analyses, test reports, and design documents
- Material selection documents for coatings, liner plates, and sumps
- Basis of Design document
- Flooding volume document
- Other documents and calculations

For each item of "Information Assessed" in the integrity assessment report, the items listed under the "Source of Information" column were reviewed and found to furnish adequate design controls and requirements to ensure the design fully satisfies the requirements of Washington Administrative Code, WAC-173-303-640, *Dangerous Waste Regulations.*

WAC 173-303-830 Modification Class:	Class 1	Class [1]1	Class 2	Class 3
Please mark the Modification Class:		X		

Enter relevant WAC 173-303-830, Appendix I Modification citation number: N/A

Enter wording of WAC 173-303-830, Appendix I Modification citation:

In accordance with WAC 173-303-830(4)(d)(i), this modification notification is requested to be reviewed and approved as a Class [1]1 modification. WAC 173-303-830(4)(d)(ii)(A) states, "Class 1 modifications apply to minor changes that keep the permit current with routine changes to the facility or its operation. These changes do not substantially alter the permit conditions or reduce the capacity of the facility to protect human health or the environment. In the case of Class 1 modifications, the director may require prior approval."

Modification Approved/Concur: ☑ Yes ☐ Denied (state reason below)

Reason for denial:

Reviewed by Ecology:

J. J. Wallace for — Date: 8-11-11

CCN: 208821

R11362999

RPP-WTP
RECEIVED
MAY 03 2011
BY PDC

AREVA

AFS-11-0240

April 28, 2011

Ms. Trina Howard
Subcontract Administrator
Bechtel National, Inc.
2435 Stevens Center Place
Richland, Washington 99354

Dear Ms. Howard:

BECHTEL NATIONAL, INC. CONTRACT NO. 24590-CM-HC4-HXYG-00211 IQRPE STRUCTURAL INTEGRITY ASSESSMENT REPORT FOR HLW SECONDARY CONTAINMENT (IA-3005092-000)

The integrity assessment of the HLW building secondary containment has been completed per the contract requirements and is enclosed for your use. The assessment found that the design is sufficient to ensure that the secondary containment rooms are adequately designed and have sufficient structural strength, compatibility with the waste(s) to be processed/stored/treated, and corrosion protection to ensure that they will not collapse, rupture, or fail.

If you have any questions, please contact Tarlok Hundal at (509) 371-1975, or via email at tarlok.hundal@areva.com.

Sincerely,

Fred R. Renz
Contracts Administration
AREVA Federal Services LLC
Richland Office

Enclosure (1)

lim

cc: D. C. Pfluger, MS 5-L w/enclosure (2)

AREVA Federal Services LLC

2101 Horn Rapids Road, RC-19, Richland, WA 99354, P.O. Box 840, Richland, WA 99352
Tel.: 509-375-8096 - Fax: 509-375-8495 - www.areva.com

IQRPE STRUCTURAL INTEGRITY ASSESSMENT REPORT FOR HLW SECONDARY CONTAINMENT

Please note that source, special nuclear and byproduct materials, as defined in the Atomic Energy Act of 1954 (AEA), are regulated at the U.S. Department of Energy (DOE) facilities exclusively by DOE acting pursuant to its AEA authority. DOE asserts, that pursuant to the AEA, it has sole and exclusive responsibility and authority to regulate source, special nuclear, and byproduct materials at DOE-owned nuclear facilities. Information contained herein on radionuclides is provided for process description purposes only.

IQRPE STRUCTURAL INTEGRITY ASSESSMENT REPORT FOR HLW SECONDARY CONTAINMENT

"I, Tarlok Singh Hundal have reviewed and certified a portion of the design of a new tank system or component located at the Hanford Waste Treatment Plant, owned/operated by Department of Energy, Office of River Protection, Richland, Washington. My duties were independent review of the current design for the HLW Secondary Containment, as required by the Washington Administrative Code, *Dangerous Waste Regulations*, Section WAC-173-303-640(3) (a) through (g) applicable components."

"I certify under penalty of law that I have personally examined and am familiar with the information submitted in this document and all attachments and that, based on my inquiry of those individuals immediately responsible for obtaining the information, I believe that the information is true, accurate, and complete. I am aware that there are significant penalties for submitting false information, including the possibility of fine and imprisonment."

The documentation reviewed indicates that the design fully satisfies the requirements of the WAC.

The attached review is sixteen (16) pages numbered one (1) through sixteen (16).

Signature

4/28/11
Date

Scope	Scope of this Integrity Assessment	This Integrity Assessment addresses the dangerous waste permit (DWP) affecting Secondary Containment rooms in HLW building from floor Elevation (-) 21'-0" to Elevation 37'-0". These rooms are listed in 24590-HLW-RPT-ENV-09-001 document and are shown on the General Arrangement Plan drawings listed in the References below. The aforementioned document identifies each room and the plant items and/or ancillary equipment it houses at various floor elevations of the HLW building. The DWP affecting rooms considered in this assessment report are: **Rooms at Elevation (-) 21'-0":** H-B005, H-B014, H-B021, H-B032, H-B035, H-B039A, and H-B039B. **Rooms at Elevation 0'-0" and other Elevations between 0'-0" and (-) 21'-0':** H-0106, H-0115, H-0117, H-0121, H-0136, H-0137 (including H-0304A, H-0310A, and pipe chase HCH15). **Rooms at Elevation 37'-0":** H-0302, H-0308 (including pipe chase HCH14).
Summary of Assessment		For each item of "Information Assessed" (i.e., Criteria) on the following pages, the items listed under "Source of Information" were reviewed and found to furnish adequate design requirements and controls to ensure that the design fully satisfies the requirements of Washington Administrative Code (WAC), Chapter 173-303 WAC, *Dangerous Waste Regulations,* WAC-173-303-640, *Tank Systems.*

References	Drawings	24590-HLW- P1- P01T- 00001, Rev. 9, HLW Vitrification Building General Arrangement Plan at El. (-) 21'-0"; 24590-HLW- P1- P01T- 00002, Rev. 7, HLW Vitrification Building General Arrangement Plan at El. 0'-0"; 24590-HLW- P1- P01T- 00004, Rev. 7, HLW Vitrification Building General Arrangement Plan at El. 37'-0"; 24590-HLW- P1- P01T- 00008, Rev. 11, HLW Vitrification Building General Sections A-A, B-B & C-C; 24590-HLW- P1- P01T- 00009, Rev. 11, HLW Vitrification Building General Sections D-D, E-E & F-F; 24590-HLW- P1- P01T- 00010, Rev. 11, HLW Vitrification Building General Section G-G & H-H; 24590-HLW- P1- P01T- 00011, Rev. 11, HLW Vitrification Building General Section J-J & K-K; 24590-HLW-DD-S13T-00013, Rev. 5, HLW Vitrification Building Structural Melter Cave #2 Liner Plate Plan, Section and Details; 24590-HLW-DD-S13T-00014, Rev. 4, HLW Vitrification Building Structural Melter Cave #2 Liner Plate Plan and Section; 24590-HLW-DD-S13T-00015, Rev. 4, HLW Vit Bldg Struct Canister Handling Cave Flr. Grillage, Insulation & SS Liner Plate Plan and Sections; 24590-HLW-DD-S13T-00021, Rev. 3, HLW Vitrification Building Structural Canister Handling Cave SS Wall Liner Partial Plan and Details; 24590-HLW-DD-S13T-00033, Rev. 3, HLW Vitrification Building Structural Concrete Embedment Details; 24590-HLW-DD-S13T-00041, Rev. 1, HLW Vitrification Building Structural Active Services Cell Melters I and II Liner Plate Plan; 24590-HLW-DD-S13T-00150, Rev. 5, HLW Vitrification Building Conc. SS Liner Plate & Insulation Pour Tunnels 1 and 2 Plan at El. (-) 21'-0"; 24590-HLW-DD-S13T-00002001, Rev. 20, HLW Vitrification Building Concrete Stainless Steel Liners Plan at El. (-) 21'-0", Sheet 1; 24590-HLW-DD-S13T-00002002, Rev. 5, HLW Vitrification Building Concrete Stainless Steel Liners Plan at El. (-) 21'-0", Sheet 2; 24590-HLW-DD-S13T-00002003, Rev. 5, HLW Vitrification Building Concrete Stainless Steel Liners Sections and Details El. (-) 21'-0"; 24590-HLW-D0-S13T-00002, Rev. 3, HLW Vitrification Building Concrete General Notes Abbreviation & Legend; 24590-HLW-D0-S13T-00003, Rev. 9, HLW Vitrification Building Notes on Concrete and Reinforcing Steel; 24590-HLW-DB-S13T-00001, Rev. 13, HLW Vitrification Building Concrete General Arrangement Plan at El. (-) 21'-0"; 24590-HLW-DB-S13T-00002, Rev. 5, HLW Vitrification Building Concrete Overall Plan at El. 0'-0"; 24590-HLW-DB-S13T-00004, Rev. 3, HLW Vitrification Building Concrete Overall Plan at El. 37'-0"; 24590-HLW-DB-S13T-00007, Rev. 15, HLW Vitrification Building Structural Concrete Placement Plan at El. (-) 21'-0"; 24590-HLW-DB-S13T-00015, Rev. 12, HLW Vitrification Building Structural Concrete Wall Placement Plan at El. 0'-0"; 24590-HLW-DB-S13T-00021, Rev. 2, HLW Vitrification Building Structural Concrete Forming Partial Plan El. 0'-0"; 24590-HLW-DB-S13T-00022, Rev. 2, HLW Vitrification Building Structural Concrete Forming Partial Plan El. 0'-0"; 24590-HLW-DB-S13T-00026, Rev. 4, HLW Vitrification Building Structural Concrete Forming Partial Plan El. 0'-0"; 24590-HLW-DB-S13T-00071, Rev. 3, HLW Vitrification Building Structural Concrete Forming Partial Plan El. 37'-0" Area 1; 24590-HLW-DB-S13T-00072, Rev. 2, HLW Vitrification Building Structural Concrete Forming Partial Plan El. 37'-0" Area 2; 24590-HLW-DB-S13T-00079, Rev. 2, HLW Vitrification Building Structural Concrete Forming Partial Plan El. 37'-0" Area 9; 24590-HLW-DB-S13T-00105, Rev. 7, HLW Vitrification Building Structural Concrete Wall Reinforcement Sections and Details; 24590-HLW-DB-S13T-00151, Rev. 3, HLW Vitrification Building Structural Concrete Forming Plan at El. (-) 21'-0"; 24590-HLW-DB-S13T-00156, Rev. 6, HLW Vitrification Building Structural Concrete Forming Plan at El. (-) 21'-0"; 24590-HLW-DB-S13T-00166, Rev. 3, HLW Vitrification Building Structural Concrete Forming Partial Section NE; 24590-HLW-DB-S13T-00263, Rev. 6, HLW Vitrification Building Structural Concrete Forming Elevations @ Col Line N and South Face; 24590-HLW-DB-S13T-00324, Rev. 2, HLW Vitrification Building Structural Concrete Forming Elevation @ Col Line 13.1 East and West Face; 24590-HLW-DB-S13T-00651, Rev. 6, HLW Vitrification Building Structural Concrete Wall Reinforcement Sections and Details;

References (cont'd)	Drawings	24590-HLW-DG-S13T-00001001, Rev. 7, HLW Vitrification Building Structural Concrete Base Mat Reinf. Plan El. (-) 21'-0" Top Reinf.; 24590-HLW-DG-S13T-00001002, Rev. 7, HLW Vitrification Building Structural Concrete Base Mat Reinf. Plan El. (-) 21'-0" Bottom Reinf.; 24590-HLW-DG-S13T-00002, Rev. 8, HLW Vitrification Building Structural Concrete Reinf. Plan (Top) at El. 0'-0"; 24590-HLW-DG-S13T-00003, Rev. 6, HLW Vitrification Building Structural Concrete Reinf. Plan (Bottom) at El. 0'-0"; 24590-HLW-DG-S13T-00033, Rev. 3, HLW Vitrification Building Structural Concrete Reinf. Partial Plan at El. 37'-0"; 24590-HLW-DG-S13T-00034, Rev. 2, HLW Vitrification Building Structural Concrete Reinf. Partial Plan at El. 37'-0"; 24590-HLW-DG-S13T-00090, Rev. 12, HLW Vitrification Building Structural Concrete Wall Reinforcement Partial Section NN; 24590-HLW-DG-S13T-00148, Rev. 3, HLW Vitrification Building Structural Wall & Floor Reinforcement Sections and Details; 24590-HLW-SS-S15T-00002, Rev. 6, HLW Vitrification Building Structural Steel Framing Overall Plan El. 0'-0"; 24590-HLW-SS-S15T-00004, Rev. 2, HLW Vitrification Building Structural Steel Framing Overall Plan El. 37'-0"; 24590-HLW-SS-S15T-00022, Rev. 7, HLW Vitrification Building Structural Steel Framing Partial Plan at El. 0'-0" in (Area 2); 24590-HLW-SS-S15T-00023, Rev. 10, HLW Vitrification Building Structural Steel Framing Partial Plan at El. 0'-0" (Area 3); 24590-HLW-SS-S15T-00042, Rev. 4, HLW Vitrification Building Structural Steel Framing Partial Plan El. 37'-0" in (Area 2); 24590-HLW-SS-S15T-00043, Rev. 6, HLW Vitrification Building Structural Steel Framing Partial Plan El. 37'-0" (Area 3); 24590-HLW-SS-S15T-00102, Rev. 3, HLW Vitrification Building Structural Steel Framing Elevation Col Line A; 24590-HLW-SS-S15T-00103, Rev. 3, HLW Vitrification Building Structural Steel Framing Elevation Col Line A; 24590-HLW-SS-S15T-00149, Rev. 1, HLW Vitrification Building Structural Steel Framing Elevation Col Line T Sheet 1; 24590-HLW-SS-S15T-00150, Rev. 0, HLW Vitrification Building Structural Steel Framing Elevation Col Line T Sheet 2; 24590-HLW-SS-S15T-00153, Rev. 1, HLW Vitrification Building Structural Steel Framing Elevation Col Line 1; 24590-HLW-SS-S15T-00157, Rev. 3, HLW Vitrification Building Structural Steel Framing Elevation Col Line 5 Sheet 1; 24590-HLW-SS-S15T-00168, Rev. 0, HLW Vitrification Building Structural Steel Framing Elevation Col Line 10 Sheet 2; 24590-HLW-SS-S15T-00190, Rev. 3, HLW Vitrification Building Structural Steel Framing Elevation Col Line 21; 24590-HLW-SS-S15T-00260, Rev. 11, HLW Vitrification Building Structural Steel Details; 24590-HLW-SS-S15T-00265, Rev. 5, HLW Vitrification Building Structural Steel Typical Connection Details; 24590-HLW-SS-S15T-00332, Rev. 5, HLW Vitrification Building Structural Steel Column Base Plate Details.

Information Assessed		Source of Information	Assessment
Foundation Design	Description of subsurface conditions and soil bearing capacity are adequate.	24590-HLW-RPT-ENV-09-001, Rev. 0, Dangerous Waste Permit Secondary Containment Requirements for HLW Facility; 24590-WTP-DC-ST-01-001, Rev. 12D, Structural Design Criteria; 24590-BOF-3PS-CE01-T0001, Rev. 6, Engineering Specification for Excavation and Backfill; 24590-BOF-3PS-C000-T0001, Rev. 6, Engineering Specification for Material Testing Services; 24590-HLW-DGC-S13T-00001, Rev. 0, Verification of HLW Basemat Thickness in Support of LCAR; 24590-HLW-DGC-S13T-00002, Rev. 3, Foundation Slab Rebar Below Grade; 24590-HLW-S0C-S15T-00006, Rev. E, HLW Vitrification Building Seismic Analysis- Structural Model; WTSC99-1036-42-17B, RPP-WTP Final Report Geotechnical Investigation, Shannon & Wilson Inc. (H-1616-51), July 2000; 24590-BOF-3PS-CE00-T0001, Rev. 0, Technical Specification for Site Work.	The Dangerous Waste Permit document lists the rooms at various elevations in HLW building requiring the secondary containment. Details of the secondary containment requirements in each room are identified in the above document. The Structural Design Criteria adequately presents design guidance for both mat and spread footings based on the Geotechnical Investigation report for the site. This report concluded that the liquefaction of the subsurface soil is unlikely during an earthquake event because the ground water table is about 275 ft below the ground surface. Bearing capacity and settlement design parameters are furnished for the dense Hanford Upper and Lower Sand Units and Structural Fill. Use of the loose wind blown (dune) sands for foundations is precluded. The Verification of HLW Basemat Thickness calculations reviewed indicates that the allowable bearing of subsurface soil below the foundation mat is more than the maximum computed value. The Excavation and Backfill Specification provides structural backfill requirements based on the Geotechnical Investigation report and adequate current codes and standards for selection, placing, and compacting structural backfill including testing of candidate fill materials and completed backfills. The Specification for Material Testing Services provides current adequate codes and standards for testing of candidate structural fill materials and in-situ testing of structural fills as they are constructed. The codes and standards are consistent with those called out in the Excavation and Backfill Specification. Review of the sample calculations shows that appropriate values of the soil parameters including allowable bearing capacity, were used for the secondary containment structures' design.

Information Assessed		Source of Information	Assessment
Foundation Design (cont'd)	Foundation design loads (including full tanks) and estimated settlement are adequately considered.	24590-WTP-DC-ST-01-001, Rev. 12D, Structural Design Criteria; ASCE 7-98, Minimum Design Loads for Buildings and Other Structures; ACI 349-01, Code Requirements for Nuclear Safety-Related Concrete Structures; ACI 318-99, Building Code Requirements for Structural Concrete; 24590-HLW-DGC-S13T-00001, Rev. 0, Verification of HLW Basemat Thickness in Support of LCAR; 24590-HLW-DGC-S13T-00002, Rev. 3, Foundation Slab Rebar Below Grade; 24590-HLW-DGC-S13T-00010, Rev. B, HLW Concrete Subsidence Evaluation; 24590-HLW-DGC-S13T-00044, Rev. A, EL.+ 0 ft Slab Rebar Design –Area 2; 24590-HLW-DGC-S13T-00046, Rev. B, EL.+ 0 ft Slab Rebar Design –Area 4; 24590-HLW-DGC-S13T-00073, Rev. A, EL.+ 0 ft Slab –Wall Dowel Design; 24590-HLW-DGC-S13T-00100, Rev. 0, Construction Equipment on Elev. 0'-0"; 24590-HLW-DGC-S13T-00115, Rev. A, HLW-Validation of Conc. for Slab at EL.(-) 21' and Walls from EL.(-) 21' to 0' for RGM; 24590-HLW-DGC-S13T-00130, Rev. A, HLW Slab Reinforcing @ Floor Elevation +37'-0" Bounded by Col. Lines 1-11 and B-M; 24590-HLW-DGC-S13T-00131, Rev. A, HLW Slab Reinforcing @ Floor Elevation +37'-0" Bounded by Col. Lines 11-20 and B-M.	The Structural Design Criteria uses current adequate standards to define design loads and load combinations (ASCE 7-98, ACI 349-01 and ACI 318-99). Dead and fluid loads are included in these loads and load combinations. Settlement design parameters are included in the Structural Design Criteria subsection on "geotechnical design parameters and foundation design." Review of the sample calculations for various floor elevation slabs shows that the full loads of the tanks and other applicable equipment including the in-structural seismic response and displacement's induced forces from other components and soil loads have been appropriately considered in the foundation design.

Information Assessed		Source of Information	Assessment
Foundation Design (cont'd)	Design calculation approach and design basis of footings with design standard references (e.g., ACI) are adequate.	24590-WTP-DC-ST-01-001, Rev. 12D, Structural Design Criteria; ACI 349-01, Code Requirements for Nuclear Safety-Related Concrete Structures; ACI 318-99, Building Code Requirements for Structural Concrete; 24590-WTP-PER-CSA-02-001, Rev. 9, Secondary Containment Design; 24590-HLW-DGC-S13T-00001, Rev. 0, Verification of HLW Basemat Thickness in Support of LCAR; 24590-HLW-DGC-S13T-00002, Rev. 3, HLW Foundation Slab Rebar Below Grade; 24590-HLW-DGC-S13T-00044, Rev. A, El. 0'-0" Slab Rebar Design Area 2; 24590-HLW-SSC-S15T-00030, Rev. E, HLW Elevation 0'-0" Primary Steel - Release 4; 24590-HLW-SSC-S15T-00076, Rev. B, HLW Elevation 37'-0" Forming and Primary Steel – Supporting Concrete; 24590-HLW-SSC-S15T-00305, Rev. A, HLW Design of Connections for Steel Framing Elevation 15'-30', and 37' and Melter Roof for HLW Building; 24590-WTP-VV-ST-01-001, Rev. 5A, Verification and Validation Test Plan and Test Report for GTSTRUDL; 24590-HLW-DVR-ST-02-102, Rev. 0, HLW Building Vitrification Structural Drop Analysis.	The Structural Design Criteria references current adequate design criteria for the design of concrete foundations and footings. ACI 349-01 is referenced for design of "safety" grade structures and ACI 318-99 is referenced for the strength design of "commercial grade" structures. The Secondary Containment Design document provides the design approach, basis, and methodology used for the design of the secondary containment foundations/footings. The input parameters used in the GTSTRUDL computer code utilized for this secondary containment design are appropriate and the output results have been appropriately validated via the Verification and Validation Test Plan and Test Report document. Review of the requirement documents and sample calculations shows that the design basis and approach, methodology, and the codes and standards used are appropriate for the foundation design to adequately withstand the applicable loads including the seismic and soil loads.

Information Assessed		Source of Information	Assessment
Foundation Design (cont'd)	Foundation material is compatible with the soil.	24590-WTP-3PS-D000-T0001, Rev. 7, Engineering Specification for Concrete Work; 24590-WTP-3PS-DB01-T0001, Rev. 8, Engineering Specification for Furnishing and Delivering Ready-Mix Concrete; 24590-BOF-3PS-C000-T0001, Rev. 6, Engineering Specification for Material Testing Services; 24590-WTP-DB-ENG-01-001, Rev. 1P, Basis of Design. 24590-WTP-3PS-DG00-T0001, Rev. 4, Engineering Specification for Furnishing of Reinforcing Steel.	The specification documents for Concrete Work and Furnishing and Delivering Ready-Mix Concrete provide adequate current requirements for design, testing, and the selection of coarse and fine aggregates and the procurement of cementitious materials. Adequate test procedures are provided in the Material Testing Services specification for testing candidate aggregates for chemical reactivity. Instructions for mixing and delivering Ready-Mix Concrete are adequate and current. As noted in Section 4.7 of the Basis of Design document, the water table lies about 250 feet below the ground surface elevation of the HLW Facility Site, so there is little reason to expect compatibility problems between the concrete foundations and the site soils.
	Foundation will withstand the effects of frost heave	Drawings listed above under References; 24590-WTP-DC-ST-01-001, Rev. 12D, Structural Design Criteria.	The Structural Design Criteria includes adequate provisions to preclude frost heave in the section addressing lateral earth pressure loads. All structural foundations are required to extend into the soil below the frost line to preclude frost heave. The frost line is 30 inches below the finished grade (El. 0'-0"), however, the drawings show that majority of the top of HLW foundation mat is at (-) 21'-0" and some sections are even lower than this. Therefore, the secondary containment foundations will not be subjected to frost heave effects.

Information Assessed		Source of Information	Assessment
Seismic Design	Seismic considerations have been adequately addressed.	24590-WTP-PER-CSA-02-001, Rev. 9, Secondary Containment Design; 24590-WTP-DC-ST-01-001, Rev. 12D, Structural Design Criteria; ACI 349-01, Code Requirements for Nuclear Safety-Related Concrete Structures; ACI 318-99, Building Code Requirements for Structural Concrete; ANSI/AISC N690, Specification for the Design, Fabrication and Erection of Steel Safety-Related Structures for Nuclear Facilities; AISC MO16-89, Manual of Steel Construction - Allowable Stress Design; ASCE 4-98, Seismic Analysis of Safety Related Nuclear Structures and Commentary; 24590-HLW-S0C-S15T-00006, Rev. E, HLW Virtification Building Structural Analysis- Structural Model; 24590-HLW-S0C-S15T-00011, Rev. 0, Structural Analysis of HLW Building – In Support of LCAR; 24590-HLW-S0C-S15T-00013, Rev. 0, HLW Virtification Building Structural Drop Analysis –for PCAR; 24590-HLW-DGC-S13T-00002, Rev. 3, Found. Slab Rebar Below Grade; 24590-HLW-DGC-S13T-00044, Rev. A, El. +0 ft Slab Rebar Design Area 2; 24590-HLW-DGC-S13T-00046, Rev. B, El. +0 ft Slab Rebar Design Area 4; 24590-HLW-DGC-S13T-00100, Rev. 0, Construction Equip. on Elev. 0'-0". 24590-HLW-DGC-S13T-00073, Rev. A, El. +0 ft Slab-Wall Dowell Design; 24590-HLW-DGC-S13T-00115, Rev. A, HLW-Validation of Conc. for Slab at EL.(-) 21' and Walls from EL.(-) 21' to 0' for RGM; 24590-HLW-DGC-S13T-00130, Rev. A, HLW Slab Reinforcing @ Floor Elevation +37'-0" Bounded by Col. Lines 1-11 and B-M; 24590-HLW-DGC-S13T-00131, Rev. A, HLW Slab Reinforcing @ Floor Elevation +37'-0" Bounded by Col. Lines 11-20 and B-M; 24590-HLW-SSC-S15T-00030, Rev. E, Elev. 0' Primary Steel-Release 4; 24590-HLW-SSC-S15T-00076, Rev. B, Elev. 37' Forming and Primary Steel Supporting Concrete; 24590-HLW-SSC-S15T-00305, Design of Connections for Steel Framing at Elevation 15'-30', 37' and Melter Roof for HLW Building; 24590-WTP-VV-ST-01-001, Rev. 5A, Verification and Validation Test Plan and Test Report for GTSTRUDL; 24590-WTP-VV-ST-05-004, Rev. 3B, SAP 2000 Verification and Validation Test Report.	The Secondary Containment Design document describes and provides references for the design methodology, materials, loads, and load combinations (including seismic loads) for the HLW Building secondary containment. The Structural Design Criteria provides detailed discipline specific codes and standards for the design of Seismic Category (SC-I/II) HLW secondary containment foundations and structures by the design engineers. ACI-349-01 and ACI 318-99 provide the design codes and load combinations for design of the secondary containment reinforced concrete foundations and structures. Structural steel components of the secondary containment structures and stainless steel liners are designed using ANSI/AISC N690 and the AISC Allowable Stress Design code. ASCE 4-98 is used for guidance on seismic analysis of safety-related nuclear structures. The GTSTRUDL and SAP 2000 structural software codes were used for concrete and steel members design. The codes and standards listed above are adequate and acceptable for addressing seismic considerations. Review of the sample calculations shows that the requirements of the applicable codes and standards are appropriately incorporated in these documents and output results were verified per V & V Test Reports. The review also concluded that the secondary containment components including the liner materials are adequately designed to withstand seismic forces and displacements.

	Information Assessed	Source of Information	Assessment
Compatibility	The stored waste is compatible with its Secondary Containment and leak detection hardware based on a detailed chemical and physical analysis of the wastes used and other information sources.	24590-WTP-DB-ENG-01-001, Rev. 1P, Basis of Design; 24590-WTP-PER-M-02-001, Rev. 3, Material Selections for Building Secondary Containment/Leak Detection; 24590-WTP-PER-CSA-02-001, Rev. 9, Secondary Containment Design; 24590-WTP-3PS-AFPS-T0006, Rev. 2, Engineering Specification for Field Applied Special Protective Coatings for Secondary Containment Areas; 24590-HLW-PER-M-02-001, Rev. 3, HLW Facility Sump Data; 24590-HLW-PER-M-02-003, Rev. 3, Flooding Volume for HLW Facility; 24590-WTP-3PS-NLLR-T0002, Rev. 1, Engineering Specification for Furnishing, Detailing, Fabrication, Delivery and Installation of Stainless Steel Liner Plates.	The Basis of Design document states that cells and sumps are appropriately lined and any spills are removed and flushed within 24-hrs or as timely as possible. The Secondary Containment Design document requires the use of stainless steel liner or special protective coatings (SPC) liner for various process cells and rooms at different elevations of HLW building. Flood Volume documents provide required specific liner height in various rooms. Based on detailed analysis of the corrosive properties of expected waste process operations and evaluation of potential leak scenarios, the Material Selection report identifies appropriate and adequate corrosion resistant materials requirements for Secondary Containment liners, sumps and leak detection equipment. The Engineering Specification for Field Applied Special Protective Coatings (SPCs) provides the selection test criteria used to determine acceptable approved coating systems. These test criteria include chemical resistance endurance requirements and wear abrasion resistance criteria which provides liners compatibility with the wastes considered. The Secondary Containment Design document provides adequate typical construction details for liners including tank anchorage details, stainless steel liner installation details and SPC installation details to be used for Secondary Containment. Rooms at various elevations are provided with floor drains as itemized in the Sump Data document for the HLW. All sumps are equipped with leak detection; however, individual floor drains are not equipped with leak detection.

Information Assessed		Source of Information	Assessment
Strength	The design shows that the Secondary Containment has sufficient strength and thickness to prevent failure owing to pressure gradients, static head during a release, physical contact with the waste, climatic conditions, and the stress of daily operations (e.g., vehicular traffic).	Drawings listed above under References; 24590-WTP-DC-ST-01-001, Rev. 12D, Structural Design Criteria; 24590-WTP-PER-CSA-02-001, Rev. 9, Secondary Containment Design; 24590-WTP-3PS-NLLR-T0002, Rev. 1, Engineering Specification for Furnishing, Detailing, Fabrication, Delivery and Installation of Stainless Steel Liner Plates; 24590-WTP-PER-M-02-001, Rev. 3, Material Selections for Building Secondary Containment/Leak Detection; 24590-HLW-DGC-S13T-00001, Rev. 0, Verification of HLW Basemat Thickness in Support of LCAR; 24590-HLW-DGC-S13T-00002, Rev. 3, Foundation Slab Rebar Below Grade. 24590-HLW-DGC-S13T-00044, Rev. A, El. +0 ft Slab Rebar Design Area 2; 24590-HLW-DGC-S13T-00046, Rev. B, El. +0 ft Slab Rebar Design Area 4; 24590-HLW-DGC-S13T-00100, Rev. 0, Construction Equip. on Elev. 0'-0"; 24590-HLW-DGC-S13T-00073, Rev. A, El. +0 ft Slab-Wall Dowell Design; 24590-HLW-DGC-S13T-00115, Rev. A, HLW-Validation of Conc. for Slab at EL.(-) 21' and Walls from EL.(-) 21' to 0' for RGM; 24590-HLW-DGC-S13T-00130, Rev. A, HLW Slab Reinforcing @ Floor Elevation +37'-0" Bounded by Col. Lines 1-11 and B-M; 24590-HLW-DGC-S13T-00131, Rev. A, HLW Slab Reinforcing @ Floor Elevation +37'-0" Bounded by Col. Lines 11-20 and B-M.	Because the Secondary Containment structures being considered are installed inside the HLW Vitrification Building as shown on the general arrangement drawings, climatic conditions and vehicular traffic are not applicable load cases. The Secondary Containment Design requirements document identifies adequate and appropriate design codes and standards and all applicable load cases (operational stresses) from site specific conditions that must be considered in the design. The Engineering Specification for Furnishing Stainless Steel Liner Plates includes specific provisions for protection of and repair of completed liners during the construction process. Review of the sample calculations shows that the secondary containment structures are designed appropriately with sufficient strength to sustain the applicable loads. Factors that were considered during stainless steel liner material selection and special protective coating (SPC) material selection are adequately discussed in the Material Selections for Building Secondary Containment/Leak Detection document.

Information Assessed		Source of Information	Assessment
Strength (cont'd)	The Secondary Containment system has sufficient strength in the presence of operational stresses from site-specific conditions (i.e., traffic, heavy equipment, precipitation, frost).	Drawings listed above under References; 24590-WTP-DC-ST-01-001, Rev. 12D, Structural Design Criteria; 24590-WTP-PER-CSA-02-001, Rev. 9, Secondary Containment Design; 24590-WTP-3PS-NLLR-T0002, Rev. 1, Engineering Specification for Furnishing, Detailing, Fabrication, Delivery and Installation of Stainless Steel Liner Plates; 24590-WTP-PER-M-02-001, Rev. 3, Material Selections for Building Secondary Containment/Leak Detection; 24590-HLW-DGC-S13T-00002, Rev. 3, Foundation Slab Rebar Below Grade. 24590-HLW-DGC-S13T-00044, Rev. A, El. +0 ft Slab Rebar Design Area 2; 24590-HLW-DGC-S13T-00046, Rev. B, El. +0 ft Slab Rebar Design Area 4; 24590-HLW-DGC-S13T-00100, Rev. 0, Construction Equip. on Elev. 0'-0"; 24590-HLW-DGC-S13T-00073, Rev. A, El. +0 ft Slab-Wall Dowell Design; 24590-HLW-DGC-S13T-00115, Rev. A, HLW-Validation of Conc. for Slab at EL.(-) 21' and Walls from EL.(-) 21' to 0' for RGM; 24590-HLW-DGC-S13T-00130, Rev. A, HLW Slab Reinforcing @ Floor Elevation +37'-0" Bounded by Col. Lines 1-11 and B-M; 24590-HLW-DGC-S13T-00131, Rev. A, HLW Slab Reinforcing @ Floor Elevation +37'-0" Bounded by Col. Lines 11-20 and B-M.	The Secondary Containment Design requirements document identifies adequate and appropriate design codes and standards and all applicable load cases (operational stresses) from site specific conditions that must be considered in the design. Because the Secondary Containment structures being considered are installed inside the HLW Vitrification Building as shown on the drawings, therefore, traffic, heavy equipment, precipitation, and frost are not applicable load cases. The Engineering Specification for Furnishing Stainless Steel Liner Plates includes specific provisions for protection of and repair of completed liners during the construction process. Review of the sample calculations shows that the secondary containment structures are designed appropriately with sufficient strength to sustain the applicable loads from the specific conditions. Factors that were considered during stainless steel liner material selection and SPC material selection are adequately discussed in the Material Selections for Building Secondary Containment/Leak Detection document.

Information Assessed		Source of Information	Assessment
Foundation Integrity	The Secondary Containment is properly supported by a foundation or base in order to prevent failure from settlement, compression, or uplift, including the residual effects of installation.	Drawings listed above under References; 24590-WTP-DC-ST-01-001, Rev. 12D, Structural Design Criteria; 24590-BOF-3PS-CE00-T0001, Rev. 0, Technical Specification for Site Work. 24590-WTP-3PS-D000-T0001, Rev. 7, Engineering Specification for Concrete Work; 24590-BOF-3PS-CE01-T0001, Rev. 6, Engineering Specification for Excavation and Backfill; 24590-BOF-3PS-C000-T0001, Rev. 6, Engineering Specification for Material Testing Services; 24590-WTP-PER-CSA-02-001, Rev. 9, Secondary Containment Design. 24590-HLW-DGC-S13T-00001, Rev. 0, Verification of HLW Basemat Thickness in Support of LCAR; 24590-HLW-DGC-S13T-00002, Rev. 3, Foundation Slab Rebar Below Grade. 24590-HLW-S0C-S15T-00006, Rev. E, HLW Vitrification Building Seismic Analysis- Structural Model; 24590-HLW-DGC-S13T-00044, Rev. A, El. +0 ft Slab Rebar Design Area 2; 24590-HLW-DGC-S13T-00046, Rev. B, El. +0 ft Slab Rebar Design Area 4; 24590-HLW-DGC-S13T-00100, Rev. 0, Construction Equip. on Elev. 0'-0". 24590-HLW-DGC-S13T-00073, Rev. A, El. +0 ft Slab-Wall Dowell Design; 24590-HLW-DGC-S13T-00115, Rev. A, HLW-Validation of Conc. for Slab at EL.(-) 21' and Walls from EL.(-) 21' to 0' for RGM; 24590-HLW-DGC-S13T-00130, Rev. A, HLW Slab Reinforcing @ Floor Elevation +37'-0" Bounded by Col. Lines 1-11 and B-M; 24590-HLW-DGC-S13T-00131, Rev. A, HLW Slab Reinforcing @ Floor Elevation +37'-0" Bounded by Col. Lines 11-20 and B-M.	These conditions are fully addressed in the Structural Design Criteria and the Secondary Containment Design requirements documents. The design requirements and codes and standards specified are adequate to satisfy the performance goals. The procurement and construction specifications adequately provide for proper foundation construction and installation of the Secondary Containment. The general arrangement plans and the associated design drawings show the secondary containment boundaries. The sample calculations reviewed show that the foundation slabs are appropriately designed and will not fail when subjected loads such as uplift, installation, settlement or residual effects.

Information Assessed		Source of Information	Assessment
Foundation Integrity (cont'd)	The placement, structural support, and type of material used for backfill around and below the Secondary Containment are appropriate.	Drawings listed above under References; 24590-BOF-3PS-CE01-T0001, Rev. 6, Engineering Specification for Excavation and Backfill; 24590-BOF-3PS-C000-T0001, Rev. 6, Engineering Specification for Material Testing Services. 24590-HLW-DGC-S13T-00001, Rev. 0, Verification of HLW Basemat Thickness in Support of LCAR; 24590-HLW-DGC-S13T-00002, Rev. 3, Foundation Slab Rebar Below Grade.	The Excavation and Backfill and Material Testing specifications contain current adequate industry standards for selecting and testing fill materials, placing and compacting backfills, and testing not less than once each lift to assure adequate compaction. Requirements for testing and record keeping are current and adequate for both "safety grade" fills and "commercial grade" fills. Drawings show that backfill requirements are properly applied, tested, documented, and accepted and approved by BNI. Review of sample calculations shows that appropriate parameters for backfill are used in design.
Infiltration	The design or operation (e.g., diking & curbing) prevents run-on or infiltration of precipitation into the Secondary Containment system unless the collection system has sufficient excess capacity (25 yr rainfall) to contain the run-on precipitation.	Drawings listed above under References; 24590-WTP-DB-ENG-01-001, Rev. 1P, Basis of Design.	This requirement is specified in the Basis of Design document. All secondary containment structure rooms being reviewed in this integrity assessment are located at various levels inside the HLW Vitrification Building where they are protected from precipitation as shown in the general arrangement plans and other associated drawings. Therefore, this requirement is not applicable to these rooms. The Basis of Design document also describes that the ground water table under the WTP site is more than 250 ft below the ground surface which makes it unlikely event for water infiltration or intrusion into the building.

Information Assessed		Source of Information	Assessment
Infiltration (cont'd)	The design includes an external moisture barrier or other means to prevent moisture from entering the cell.	Drawings listed above under References; 24590-WTP-DB-ENG-01-001, Rev. 1P, Basis of Design. 24590-WTP-3PS-NLLR-T0002, Rev. 1, Engineering Specification for Furnishing, Detailing, Fabrication, Delivery and Installation of Stainless Steel Liner Plates; 24590-WTP-3PS-AFPS-T0006, Rev. 2, Engineering Specification for Field Applied Special Protective Coatings for Secondary Containment Areas; 24590-WTP-PER-J-02-002, Rev. 4, Leak Detection in Secondary Containment Systems.	The secondary containment rooms listed in the Scope section above are shown on the general arrangement plan drawings at floor elevations from (-) 21'-0" up to 37'-0" are located inside the HLW Vitrification Building which protects them from the precipitation and surface water percolation. The Basis of Design document states that the ground water table at WTP site is located more than 250 feet below the ground surface; therefore, infiltration of external moisture into the interior of the building is not a credible event. And furthermore, the subject Secondary Containment rooms as shown on the drawings are lined with stainless steel plates or special protective coating (SPC) material. The sumps in these rooms are equipped with leak detection monitoring instrumentation as an added insurance against moisture infiltration and/or presence.

Information Assessed		Source of Information	Assessment
Liner System	The containment area is free of cracks or gaps and the design discusses methods of their minimization.	24590-WTP-PER-CSA-02-001, Rev. 9, Secondary Containment Design; 24590-WTP-3PS-NLLR-T0002, Rev. 1, Engineering Specification for Furnishing, Detailing, Fabrication, Delivery and Installation of Stainless Steel Liner Plates; 24590-WTP-3PS-AFPS-T0006, Rev. 2, Engineering Specification for Field Applied Special Protective Coatings for Secondary Containment Areas.	The Secondary Containment Design requirements document provides adequate and appropriate codes and standards for design of leak-tight liners. This report includes appropriate details for design and installation of stainless steel and special protective coating liners and sumps free of cracks and gaps. The Engineering Specification for Furnishing, Detailing, Fabrication, Delivery and Installation of Stainless Steel Liner Plates provides detailed information on design, fabrication, installation, and inspection of stainless steel liners and sumps. The Engineering Specification for Field Applied Special Protective Coatings provides detailed information on the tested and approved coating systems. This information includes directions for surface preparation, patching materials and application methods, and specific directions for application of multi-layer coatings. From the review of the documents listed in the Sources of Information column, it is concluded that the liner materials applied are adequate.

	Information Assessed	Source of Information	Assessment
Liner System (cont'd)	The design has considered the compatibility of the concrete liner or coatings and waste and presents information on coatings planning to be used from the manufacturer addressing compatibility with the stored waste. The lining or coating must prevent the waste from migrating into the concrete.	24590-WTP-PER-M-02-001, Rev. 3, Material Selections for Building Secondary Containment/Leak Detection; 24590-WTP-PER-CSA-02-001, Rev. 9, Secondary Containment Design; 24590-WTP-3PS-NLLR-T0002, Rev. 1, Engineering Specification for Furnishing, Detailing, Fabrication, Delivery and Installation of Stainless Steel Liner Plates; 24590-WTP-3PS-AFPS-T0006, Rev. 2, Engineering Specification for Field Applied Special Protective Coatings for Secondary Containment Areas.	The Material Selections document contains adequate and appropriate general information on the compatibility of planned Secondary Containment stainless steel and special protective coating liners with the waste. The Secondary Containment Design document provides adequate and appropriate standard details for design and installation of stainless steel and special protective coating liners that will prevent migration of the waste into the concrete. The Engineering Specification for Furnishing, Detailing, Fabrication, Delivery and Installation of Stainless Steel Liner Plates provides detailed information on design, fabrication, installation, and inspection of stainless steel liners and sumps. The Engineering Specification for Field Applied Special Protective Coatings (SPC) provides detailed information on the tested and approved coating systems. This information includes directions for surface preparation, patching materials and application methods, and specific directions for application of multi-layer coatings.

Quarter Ending 09/30/2011 24590-HLW-PCN-ENV-05-010

Hanford Facility RCRA Permit Modification Notification Form
Part III, Operating Unit 10
Waste Treatment and Immobilization Plant

Index

Page 2 of 3: Hanford Facility RCRA Permit, Part III, Operating Unit 10, Waste Treatment and Immobilization Plant
Replace HLW Plant Item Mechanical Data Sheets 24590-HLW-MKD-HOP-P0019 and 24590-HLW-MKD-HOP-P0020 in Appendix 10.6 and Specification 24590-HLW-3PS-MBTV-T0002 for the HLW Facility Thermal Catalytic Oxidizer/Selective Catalytic Reducer (HOP-SKID-00005/7) in Appendix 10.7 of the Dangerous Waste Permit (DWP).

Submitted by Co-Operator:

Donna Busche 6/15/11
D. M. Busche Date

Reviewed by ORP Program Office:

D. L. Noyes 7/8/11
D. L. Noyes Date

Quarter Ending 09/30/2011

24590-HLW-PCN-ENV-05-010

Hanford Facility RCRA Permit Modification Notification Form	
Unit: **Waste Treatment and Immobilization Plant**	Permit Part: **Part III, Operating Unit 10**

Description of Modification:

The purpose of this Class 1 prime modification is to update the mechanical data sheets and specification for the HLW Facility Thermal Catalytic Oxidizer/Selective Catalytic Reducer (HOP-SKID-00005/7). The following documents are submitted to replace the documents currently included in Appendices 10.6 and 10.7. Note that HOP-SKID-00006/8 are not included in the scope of this PCN because they are ammonia/air dilution skids and do not manage dangerous waste.

Appendix 10.6			
Replace:	24590-HLW-MKD-HOP-P0019, Rev. 0	With:	24590-HLW-MKD-HOP-00019, Rev. 10
	24590-HLW-MKD-HOP-P0020, Rev. 0		
Appendix 10.7			
Replace:	24590-HLW-3PS-MBTV-T0002, Rev. 0	With:	24590-HLW-3PS-MBTV-T0002, Rev. 1

This modification requests Ecology approval and incorporation into the permit the specific changes to the above documents that are identified by revision bars or triangles indicating changes since the last revision of the document. Changes to earlier revisions of source documents not captured by change bars are identified in the revision history summary. Revisions are the result of ongoing design (changes from vendor preliminary design to vendor detailed design) and incorporates general criteria from design verification reviews.

Significant changes to data sheet 24590-HLW-MKD-HOP-00019, *HLW Catalytic Oxidizer/Reducer*, for HOP Skids HOP-SKID-00005 and HOP-SKID-00007, are summarized below:

- Revised Quality Level to CM
- Revised Plant Item Number
- Added reference calculations and drawings
- Revised Offgas Inlet Conditions and added Offgas Outlet Conditions
- Added and revised Process Data Notes
- Revised Ammonia Supply conditions
- Added Ammonia Dilution Air Supply conditions
- Added Process Performance Requirements
- Revised Mechanical Data
- Removed Process Piping and Housing Fabrication Data
- Revised System Performance data
- Revised Components (Seller) data
- Added Ammonia/Air Dilution Skid Requirements
- Added Catalytic Oxidizer/Reducer Skid Requirements
- Added Equipment Qualification Datasheet
- Increased pressure drop across the HLW TCO
- Extended the HLW TCO envelope to reach the next available embed plate
- Revised the environmental qualification specifications to align with the WTP authorization basis
- Refined seismic and environmental qualifications for instruments that are safety significant
- Added corrosion and erosion allowances

Quarter Ending 09/30/2011 24590-HLW-PCN-ENV-05-010

Significant changes to specification 24590-HLW-3PS-MBTV-T0002, *Engineering Specification for HLW Thermal Catalytic Oxidizers/Reducers*, are summarized below:

- Incorporated TCNs 24590-CM-MRA-MBT0-00002-T0002, T0004, T0007, and T0009
- Incorporated by reference SDDR 24590-WTP-SDDR-MS-10-00004 and 10-00115
- Revised sample tap size
- Revised equipment shim details
- Added corrosion and erosion allowances for HLW TCO

This modification requests Ecology approval and incorporation of the following outstanding change document into the permit. Although not yet incorporated into the revised documents included in this PCN, the listed change document is intended to be incorporated into the permit.

24590-WTP-SDDR-MS-11-00051

WAC 173-303-830 Modification Class:	Class 1	Class [1]1	Class 2	Class 3
Please mark the Modification Class:		X		

Enter relevant WAC 173-303-830, Appendix I Modification citation number: NA

Enter wording of WAC 173-303-830, Appendix I Modification citation:

In accordance with WAC 173-303-830(4)(d)(i), this modification notification is requested to be reviewed and approved as a Class [1]1 modification. WAC 173-303-830(4)(d)(ii)(A) states, "Class 1 modifications apply to minor changes that keep the permit current with routine changes to the facility or its operation. These changes do not substantially alter the permit conditions or reduce the capacity of the facility to protect human health or the environment. In the case of Class 1 modifications, the director may require prior approval."

Modification Approved/Concur: [X] Yes [ ] Denied (state reason below)

Reason for denial:

Reviewed by Ecology:

J. J. Wallace for — Date: 8-25-11

River Protection Project Waste Treatment Plant	**MECHANICAL DATA SHEET** **HLW Catalytic Oxidizer / Reducer** ISSUED BY RPP-WTP PDC R11377941	**PLANT ITEM No.** 24590-HLW-MX-HOP-SKID-00005 24590-HLW-MX-HOP-SKID-00006 24590-HLW-MX-HOP-SKID-00007 24590-HLW-MX-HOP-SKID-00008 Data Sheet No. / Rev. 24590-HLW-MKD-HOP-00019 / 10

Project:	RPP-WTP	System Description	Thermal Catalytic Oxidizer/Selective Catalytic Reduction
Project No.:	24590		
System No.:	HOP	Reference Docs.	Specification: 24590-HLW-3PS-MBTV-T0002 Process Calc.: 24590-HLW-MKC-HOP-00010 Process Calc.: 24590-HLW-M4C-HOP-00011 Process Calc.: 24590-HLW-M6C-HOP-00013
Building:	HLW		
Quality Level	CM	Associated Dwgs.	24590-HLW-M5-V17T-20004, -00004 24590-HLW-M6-HOP-20008, -00008 24590-HLW-P1-P23T-00112, -00117
Safety Classification	SS		
Seismic Criteria	Category III		

ITEMS MARKED WITH * ARE TO BE PROVIDED BY VENDOR

Process Data (Buyer)

Offgas Inlet Conditions:

		Nominal	Maximum	Design
Vol. Flow	(acfm) (scfm)	2448 1465	3102 1750	N/A 2000 (Process Note 5)
Temperature	(°F)	330	330	355 (Process Note 5)
Pressure	(in. WG)	-39	-45	-82 / +84
Density	(lb/ft³)	0.0432	0.395	0.038
Allow. Diff. Pres.			(in. WG)	15

Offgas Inlet Composition:

		Nominal	Maximum
N_2	(% Volume)	69.5 %	63.7 %
O_2	(% Volume)	18.7 %	17.1 %
H_2O	(% Volume)	10.6 %	18.0 %
CO_2	(% Volume)	0.36 %	0.38 %
Ar	(% Volume)	0.83 %	0.76 %

Offgas Outlet Conditions:

		Nominal	Maximum	Design
Temperature	(°F)	*	*453 (Note 7)	Note 1
Maximum Ammonia Slip, ppm			50	50
Design Temperature (Process Note 1)				*1000 F

Minor Offgas Components (Process Note 5)	Maximum, kg/hour	Bounding, kg/hour
NH_3	4.37E-03	3.19E-02
NO	5.79E-01	1.88E+00
N_2O	1.25E-02	1.50E-01
NO_2	9.66E-02	2.25E+00
CO	1.70E-02	4.07E+00
SO_2	6.70E-03	2.05E-02
H_2	3.53E-03	8.79E-02
Hg	1.25E-04	2.57E-04
HCl	6.58E-06	1.77E-05
HF	3.99E-06	1.63E-05
I_2	1.11E-06	1.11E-06
Particulate	4.34E-11	2.11E-10
VOC/SVOC	2.76E-03	3.20E-03

Process Data Notes:

1. Seller's design outlet temperature based on the Thermal Catalytic Oxidizer/Selective Catalytic Reducer vessel and internal component temperatures using thermodynamic activities in the equipment. Design temperature per Seller = *1000 °F
2. Deleted
3. Deleted.
4. Maximum step changes in NO and NO_2 concentrations over a ten-minute period may be as high as 500 ppmv. Minimum NOx concentration is 0 ppmv.
5. Heater sizing for initial heat-up to system operating temperature shall not credit contribution from minor offgas components and specified design flow and temperature (inlet conditions).
6. Maximum SO_2 listed does not include transient spikes.
7. Based on heat exchanger efficiency of 70%. See vendor submittal 24590-CM-POA-MBT0-00002-03-00001 for verification of design temperature.

Ammonia Supply:

		Nominal	Maximum	Design
Temperature	(°F)	55	117	150
Internal Pressure	(psig)	16	45	300
Solids Content	(wt. %)	0 %	0 %	0%

Ammonia Dilution Air Supply:

		Nominal
Pressure	(psig)	110
Filtration	(microns)	3
Inlet Nozzle Size	(in)	2

Ammonia Note:

Buyer will supply anhydrous ammonia at Seller's specified flowrate to meet design conditions. Seller is responsible for flow control of anhydrous ammonia to meet performance requirements. Ammonia vaporizer assures nominal conditions.

Ammonia Dilution Air Note:

Buyer will supply ammonia dilution air at Seller's specified flowrate to meet design conditions. Seller is responsible for flow and pressure control of dilution air to meet performance requirements.

Ammonia Note:
Buyer will supply anhydrous ammonia at Seller's specified flow rate to meet design conditions. Seller is responsible for flow control of anhydrous ammonia to meet performance requirements. Ammonia vaporizer assures nominal conditions.

Ammonia Dilution Air Note:
Buyer will supply ammonia dilution air at Seller's specified flow rate to meet design conditions. Seller is responsible for flow and pressure control of dilution air to meet performance requirements.

The following Process Performance Requirements are the WTP permits performance requirements that shall be used by the Buyer to verify Seller's System Performance requirements are met:

1. The maximum achievable control technology (MACT) destruction removal efficiency (DRE) for volatile organic compounds (VOCs) and semi-volatile compounds (SVOCs) shall be greater than or equal to 95%. The principal organic dangerous constituents (PODCs) to be used in HLW performance testing are naphthalene (CAS 91-20-3) and 2-propene-1-ol (CAS 107-18-6). A DRE greater than 95% is preferred.
2. The NOx (defined as NO and NO_2) Selective Catalytic Reduction (SCR) unit shall perform with a reduction efficiency of 95%.
3. Dioxin and furan emissions at the outlet of the Thermal Catalytic Oxidizer/Reducers shall meet the MACT criteria of 0.2 ng/m^3 TEQ (Toxic Equivalent).
4. Maximum inlet loading 0.7 grams per minute naphthalene and 2.0 grams per minute allyl alcohol, and a minimum oxidation catalyst outlet temperature of 700°F shall be used as the basis for DRE determination. (General Note 9)
5. Carbon monoxide (CO) emission shall meet the MACT criteria of 100 parts per million (ppm) by volume, over an hourly rolling average, dry basis.
6. Hydrocarbon emission shall meet the MACT criteria of 10 parts per million (ppm) by volume, over an hourly rolling average dry basis and reported as propane.

Please note that source, special nuclear and byproduct materials, as defined in the Atomic Energy Act of 1954 (AEA), are regulated at the US Department of Energy (DOE) facilities exclusively by DOE acting pursuant to its AEA authority. DOE asserts, that pursuant to the AEA it has sole and exclusive responsibility and authority to regulate source, special nuclear, and byproduct materials at DOE-owned nuclear facilities. Information contained herein on radionuclides is provided for process description purposes only.

Safety Screening required?: Yes X No__ (If yes per 24590-WTP-GPP-SREG-002, E&NS signature required below)

River Protection Project **Waste Treatment Plant**	**MECHANICAL DATA SHEET** **HLW Catalytic Oxidizer / Reducer**	**PLANT ITEM No.** **24590-HLW-MX-HOP-SKID-00005** **24590-HLW-MX-HOP-SKID-00006** **24590-HLW-MX-HOP-SKID-00007** **24590-HLW-MX-HOP-SKID-00008** Data Sheet No. — Rev. **24590-HLW-MKD-HOP-00019** — **10**

Approvals

Rev	Reason for revision	Systems/ Process Eng.	Equipment Eng.	Checked	E&NS	EQ	MET	Approved	Date
10	Re instate 1750 (scfm) max flow rate. Fix typos and re instate general notes.	R Peters	D Rickettson	R. RICKENBACH ~~G Goolsby~~	C Meng	N/A	N/A	D Wilsey	6-3-11
9	Incorporate TCN 24590-CM-MRA-MBT0-00002-T0003, T0008, & T0009 and SDDR 24590-WTP-SDDR-MS-10-00022 & 00135	M. O'Neill	T. Henry	D. Rickettson	C Meng	N/A	D Adler	J Schneider	25-Feb-11
8	General Revision - Major revision. No revision triangle required.	M. O'Neill	T.Valenti	G. Goolsby	C. Meng	N/A	Steve Vail for R. Davis	J. Roth	9-Apr-09
7	Changed temperature for HLW-SCR-00001. Added 25 °F design margin per 24590-WTP-GPG-M-017. Added Ammonia Piping Material Type. Added MET as reviewer.	M. O'Neill	J. Wood	U. Sen	C. Meng	Phil Snyder for J. White	R. Davis	J. Julyk	17-Mar-08
6	Consolidated data sheets, this revision supersedes 24590-HLW-MKD-HOP-00020 Rev 5. Added safety classification. Revised process data note 2. Revised process performance requirement note 1. Added subcomponent IDs to Component table. Revised note 4. Includes new EEQ data. Includes HPAV screening and Dangerous waste permitting statement.	Mike O Neill	Josh Wood	Utpal Sen	Chris Meng	Dick Hills		John Julyk	14-Feb-08
5	Minor Change: Attachment 1, included on the EDR copy, was missing from the issued Rev 4 data sheet, this revision includes the missing attachment. Rev 4 triangles are kept for clarity to show changes from Rev 3.	Tom Galioto	Anthony Cutrona	Craig Knauss	Chris Meng	N/A		John Julyk	26-Jun-07
4	Updated quality level designator. Revised offgas inlet conditions and composition. Added Note 8 and Attachment 1. Added EQ data. Revised ammonia and dilution air supply conditions. Added Safety signature to Approval block. Updated Vendor data per 24590-CD-POA-MBT0-00002-07-00001.	Tom Galioto	Anthony Cutrona	Craig Knauss	Chris Meng	N/A		John Julyk	21-May-07
3	Revised housing material and system performance. Added NOx step change requirement and ammonia skid layout requirements.	Jim Rouse	David Pease	Chris Morley	N/A	N/A		Mark Hoffmann	31-Jul-05
2	Revised catalyst model number per SDDR 24590-WTP-SDDR-PROC-04-00879, and added dilution air, outlet piping, and ammonia skid requirements.	J. Rewari / J. Rouse	D. Pease	C. Morley	N/A	N/A		M. Hoffmann	8-Nov-04
1	Revised Seller Information	J. Medina / J. Rouse	D. Pease	C. Morley	N/A	N/A		M. Hoffmann	4-May-04
0	Issued for Purchase. This data sheet supercedes 24590-HLW-MKD-HOP-00015 R/1.	J. Medina / J. Rouse	D. Pease	D. Yarbrough C. Morley	N/A	N/A		M. Wright	8-Apr-04

Mechanical Data (Buyer)

Construction Data:

Process Equipment Dimensions (L x W x H):

Sections (Applicable Only to the Catalytic Oxidizer/Reducer Skids)	17'-0" x 5'-0" x 10'-9"	ft
Overall	39'-6" x 5'-0" x 17'-6"	ft
Operating Weight	*70,830	lbf
Shipping Dimensions (L x W x H)	*18' 0" x 6' 10" x 12'	ft
Shipping Weight	*70,830	lbf

Ammonia Dilution Equipment (L x W x H):

Ammonia Dilution Skid dimensions	14'-6" x 5'-6" x 7'-6"	ft
Operating Weight	*~15,000	lbf
Shipping Dimensions (L x W x H)	15' x 6' x 7.5'	ft
Shipping Weight	*~15,000	lbf

Thermal Analysis Data:

Room Temperature	83	°F
Earth Temperature Under Base	70	°F
Maximum Heat Loss	15	Kw

Concrete Slab Base Thickness	3	ft
Thermal Conductivity of Concrete Slab	1.8	W / m / K

Thermal Cycling Frequency:
For design purposes, use a thermal cycle frequency of once every two (2) months for the life of the plant (40 years).

Nozzle Loading (Buyer, See Note 1)

Inlet:

Load Case	Fa (lb)	Fb (lb)	Fc (lb)	Ma (ft-lb)	Mb (ft-lb)	Mc (ft-lb)
Weight	400	-500	400	1000	3000	-1000
Thermal (+)	200	1000	200	2000	2000	2000
Thermal (-)	-4400	-1000	-1000	-7000	-15000	-25000
Seismic (+)	3500	3500	3500	11000	18000	18000
Seismic (-)	-3500	-3500	-3500	-11000	-18000	-18000
Normal (+)	600	500	600	3000	5000	1000
Normal (-)	-4000	-1500	-600	-6000	-12000	-26000
Occasional (+)	4100	4000	4100	14000	23000	19000
Occasional (-)	-7500	-5000	-4100	-17000	-30000	-44000

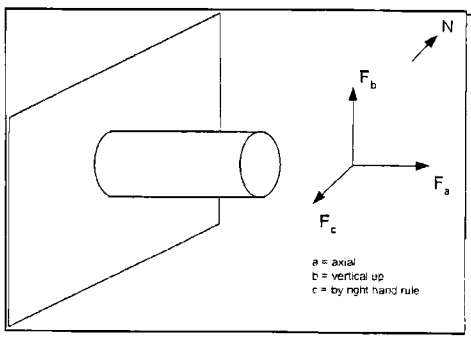

See supplier submittal 24590-CM-POA-MBT0-00002-05-00009 for nozzle movement values.

Outlet:

Load Case	Fa (lb)	Fb (lb)	Fc (lb)	Ma (ft-lb)	Mb (ft-lb)	Mc (ft-lb)
Weight	-1700	400	400	-200	-500	500
Thermal (+)	2000	1000	2000	100	13000	1000
Thermal (-)	-1300	-2000	-2000	-20000	-2000	-16000
Seismic (+)	4200	6600	6600	9500	75000	75000
Seismic (-)	-4200	-6600	-6600	-9500	-75000	-75000
Normal (+)	300	1400	2400	800	12500	1500
Normal (-)	-3000	-1600	-1600	-20200	-2500	-15500
Occasional (+)	4500	8000	9000	10300	87500	76500
Occasional (-)	-7200	-8200	-8200	-29700	-77500	-90500

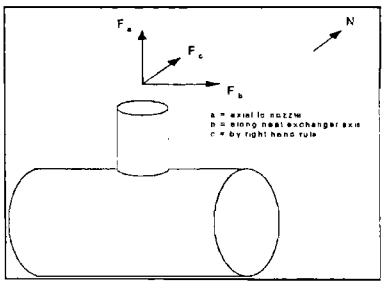

See supplier submittal 24590-CM-POA-MBT0-00002-05-00009 for nozzle movement values.

Notes:
1. Normal = Weight + Thermal
2. Occasional = Weight + Thermal + Seismic

System Performance (Seller, General Note 2)

Volatile Organic DRE	*95	%	Semi-Volatile Organic DRE		*95	%	
NOx Reduction	*95	%	Ammonia consumption, max		*15	lb/hr	
NOx emissions, max	*119	ppmvw	Ammonia entering injection chamber:	Pressure	*30	in-WG	
Ammonia slip, max	*10	ppmvw		Flow	*14.0	lb/hr	
Ammonia/NOx molar injection ratio	*			Temp.	*100	°F	
Pressure drop through Oxidizer unit	*10	in-WG	Dilution Air:	Pressure	*80	in-WG	
Minimum service life catalyst:				Flow	*200	scfm	
VOC Catalyst	*3	yrs (EST.)					
NOx Catalyst	*3	yrs (EST.)					

Recommended Catalyst replacement schedule: Replacement schedule could be 1-2 year intervals.

Components (Seller, General Note 2)

Catalyst:	**Organic: HOP-SCO-00001 & 00004**	**NOx: HOP-SCR-00001 & 00002**
Manufacturer	BASF (VOCat 300S) "Source Controlled"	*BASF NO_xCAT VNX-300
Number of reactors	1	1
Number of catalyst modules	*27	*27
Residence time (at standard conditions), sec	0.75 (General Note 9)	*
Arrangement	*3 High x 3 Wide	*3 High x 3 Wide
Total catalyst reactor vol. ft^3	*22.5	*22.5
Type	Precious metal - platinum	*Vanadium/Titanium Oxide
Material: base/substrate	Ceramic - cordierite	*Ceramic Cordierite
Total Number of layers per reactor	3	*3
Thickness of layer, in	*10	*10
Space provided between layers for remixing	Yes	*
Space for additional layer, in	No	*No
Is dummy layer provided	No	*No
Number of flow passages	*230 cpsi	*64
Flow passage, in. x in.	0.060" x 0.060"	*0.11" x 0.11"
Face velocity thru reactor, fpm	*427	*427
Outlet Offgas Temperature for site performance testing, °F	700 (Min) - 750 (Nominal)	*700 (Min) - 750 (Nominal)
Design Temperature, °F	*750	*750
Catalyst module Dimensions, (L x W x D)	*12" x 12" x 10"	*12" x 12" x 10"
Catalyst module weight, lb	*50	*50
Total weight of catalyst reactor, lb	*1,350	*1,350
Housing:		
Material Type	347 SS	347 SS
Material/Thickness, in	*3/8	*3/8
Number of Section	*1	*1
Weight of Heaviest Section, lb	*10,500	*10,000
Insulation Lining	*Microporous (Super G)	*Microporous (Super G)
Material/Thickness, in	*4	*4
Thermal Cond, Btu-in/hr ft^2 °F	*0.50 - 0.84	*0.50 - 0.84
Method of Attachment	*Studs with clips	*Studs with clips
Design pressure, psig	*see Offgas Inlet Conditions on pg. 1	
Operating pressure, psig	*see Offgas Inlet Conditions on pg. 1	
Design temperature, °F	*See General Note 10	
Corrosion Allowance	0.010 inch	0.010 inch
Erosion Allowance	None	None

Ducting:		
Material/Thickness, in	*347SS / 3/8	*347SS / 3/8
Cross Section, ft x ft	*Inlet = 18" x 24" / Outlet = 4' x 5'	*Inlet = 18" x 24" / Outlet = 4' x 5'
Duct Velocity, fpm	*Inlet = 1034 / Outlet = 200	*Inlet = 1034 / Outlet = 200
Design Temperature, °F	*See General Note 10	
Corrosion Allowance	0.010 inch	0.010 inch
Erosion Allowance	None	None
Electric Heater: HOP-HTR-00001 & 00007		
Manufacturer	*CCI Thermal	
Type	*Tubular Elements	
Number of Heat Zone	*24 Heating Elements / Zone	
Number of Zones	*5	
Watt Density, W/in^2	*8.6	
Power, kW	*	
Voltage/Current rating	*480v /	
Wetted Material Type	*347 SS	
Heating Element & Enclosure Material Type	*Incoloy 800	
High Temp. Surface Material Type	347 SS	
Design Temperatuer, °F	*1000	
Corrosion Allowance (Electric Heater Housing)	0.010" (does not include heater element components)	
Erosion Allowance	None	
Recuperative Heat Exchanger: HOP-HX-00001 & 00003		
Manufacturer	*Thermo Z / Munters - Deschamps	
Type	*Plate / Frame	
Cold Side Components & Enclosure Material Type	347 SS	
Hot Side Components/Tubes	347 SS / 439 SS	
Ht transfer coefficient, Btu/hr ft^2 °F	*3.20	
Heat exchange area, ft^2	*1,756	
ΔT (LMTD), °F	*122	
Heat Eexchanger duty, Btu/hr	*674,764	
Design Temperautre, °F	*See General Note 10	
Corrosion Allowance	0.010 inch, No corrosion allowance required for heat transfer surface	
Erosion Allowance	None	
Ammonia Injection Manifold: (Note 7)		
Type/Arrangement	*Spray Nozzle Grid	
Feed Inlet Dia. in	*2	
Supply Pressure/Temp (psi/°F)	*0.5 / 100	
Material Type	347 SS (Vessel Internals) 316L SS (External to Vessel)	
No. of nozzle bars per manifold	*4	
No. of nozzles per bar	*12	
Spacing between nozzles, in	*7.5 - 10	
Nozzle opening diameter, in	*0.0625	
Corrosion Allowance	0.010 inch	
Erosion Allowance	None	
Weight		
Shipping (Heaviest), lb	*5,470	
Installed, lb	*70,830 (Installed operating weight of the complete TCO/SCR skid)	
Shipping dimension (L x W x H), ft	*18' x 6' x 12'	*18' x 6' x 12'

Ammonia / Air Dilution Skid Layout (HOP-SKID-00006 and 00008)

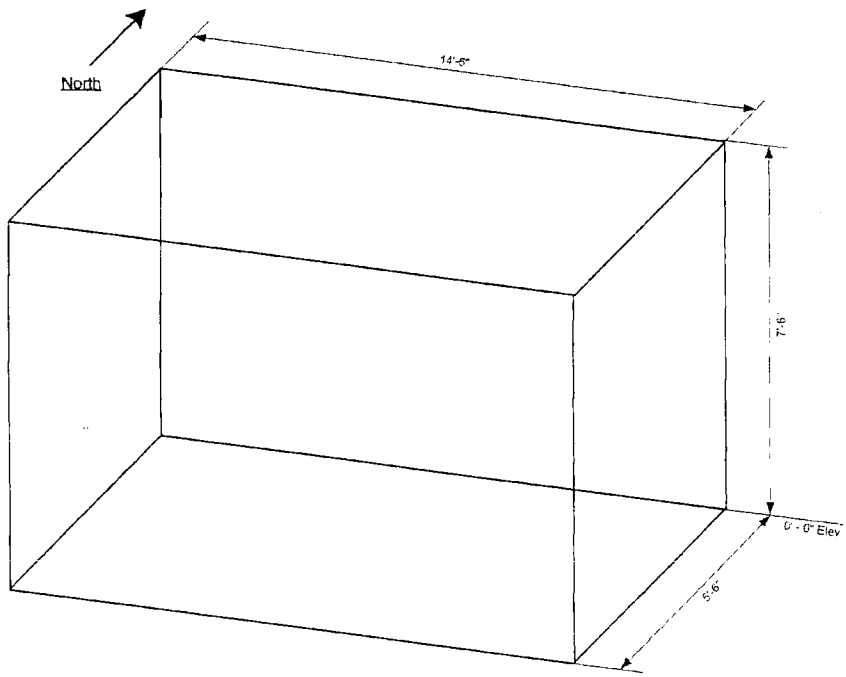

HOP-SKID-00006 (Typical of HOP-SKID-00008)

Ammonia / Air Dilution Skid Requirements:

1. All equipment and appurtenances including any platforms, ladders, etc. must fit within the space envelope.

Catalytic Oxidizer / Reducer Skid Layout (HOP-SKID-00005 and 00007)

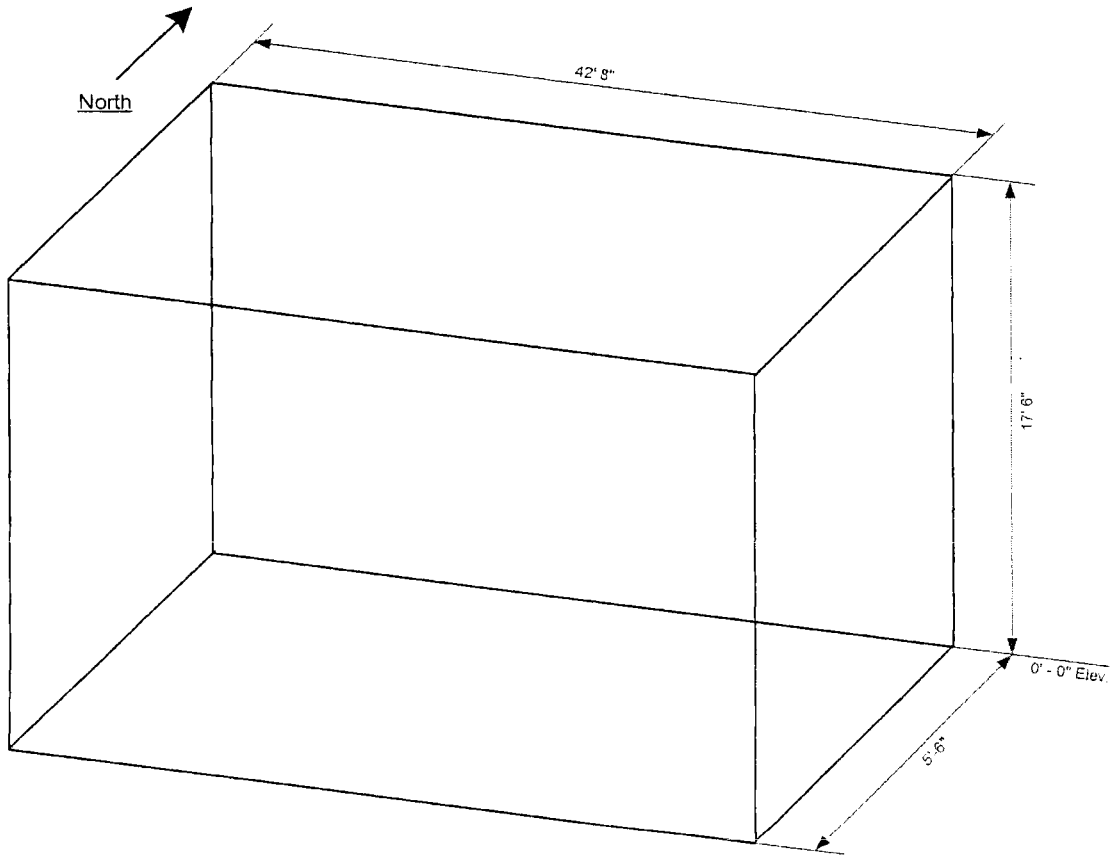

Catalytic Oxidizer / Reducer Skid Requirements:

1. All equipment and appurtenances including any platforms, ladders, etc. must fit within the space envelope.

2. Maximum allowable equipment dimensions are shown, except that the height for Heaters HOP-HTR-00001 / 00007 shall include space for maintenance access. If height is exceeded, heaters shall be moved to above structural steel at the 12'-9" elevation.

Notes

GENERAL NOTES:

1. Nozzle location and orientation shall be as shown on drawing 24590-CM-POA-MBT0-00002-04-00002. Nozzle location tolerance = ±1/2" (X,Y,Z).
2. Seller to confirm values.
3. Seller's data is rounded and based on preliminary engineering design.
4. Catalytic Skid and Sub component tag numbers follow:

   Melter 1: HOP-SKID-00005: HOP-HX-00001, HOP-HTR-00001, HOP-SCO-00001, HOP-SCR-00001

   Melter 2: HOP-SKID-00007: HOP-HX-00003, HOP-HTR-00007, HOP-SCO-00004, HOP-SCR-00002
5. Data marked with an asterisk is or will be provided by Seller.
6. Contents of this document are Dangerous Waste Permit Affecting.
7. Ammonia / Air Injection Manifold design shall be finalized after flow modeling results.
8. Equipment location is shown on Drawings 24590-HLW-P1-P23T-00112 and 24590-HLW-P1-P23T-00117.
9. Oxidation catalyst residence time is based on pilot plant performance at the Catholic University's Vitreous State Laboratory (VSL). Reference *Regulatory Off-Gas Emissions Testing on the DM1200 Melter System Using HLW and LAW Simulants*, 24590-101-TSA-W000-0009-166-00001. Offgas VOC content is based on *Small Scale Melter Testing for Allyl Alcohol Method Verification*, VSL-08R1390-1.
10. * Inlet at recuperative heat exchanger shall use a operating temperature of 355 ^{0}F (T_1). From the outlet of the recuperative heat exchanger to the inlet of the electric heater the operating temperature shall be 660 ^{0}F (T_2). The electric heater shall be designed for 1000 ^{0}F. The electric heater outlet pipe and SCO and SCR housings shall be designed using a 1000 ^{0}F temperature. Electric heater controls shall limit the offgas temperature to 750 ^{0}F to insure catalyst performance. Inlet of the recuperative heat exchanger (T_3) shall use operating temperature of 750 ^{0}F. Outlet of the recuperative heat exchanger (T_4) shall use a operating temperature of 490 ^{0}F.
    See vendor drawing numbers 24590-CM-POA-MBT0-00002-03-00038 and 24590-CM-POA-MBT0-00002-04-00030 for location of T1, T2, T3, and T4.

EQUIPMENT QUALIFICATION DATASHEET (EQD)

Equipment Identification		
Full Component Tag Number or BNI Stock Code Number	24590-HLW-MX-HOP-SKID-00005 24590-HLW-MX-HOP-SKID-00006 24590-HLW-MX-HOP-SKID-00007 24590-HLW-MX-HOP-SKID-00008	Safety Classification ☐ SC ☒ SS ☐ APC-PAM
Equipment Datasheet Number	24590-HLW-MKD-HOP-00019	
Description	HLW Thermal Catalytic Oxidizer/Reducer for HLW Secondary Offgas Treatment Manufacturer: IONEX	Seismic Category ☐ SC-I ☐ SC-II ☒ SC-III ☐ SC-IV ☐ SC-III Seismic Interaction only
Location (Facility / Building and Room No.)	HLW/H-A123	
Safety Function(s)	The following are the Safety Significant functions of the TCO credited for DBE: • Confinement of melter offgas • Catalyst skid electric heater (HOP-HTR-00001/00007) high temperature interlock. Heater to be shut down at a given high temperature set point to prevent over temperature condition. (Signal from TE 0514 / 2514 to JY 0520 / 2520) • Ammonia Piping - The ammonia piping shall provide confinement of ammonia. • Ammonia Air Addition (Dilution) - To dilute and maintain the TCO/SCR ammonia concentration below the Lower Flammable Limits (LFL), air must be injected in the ammonia supply. • Ammonia Supply Isolation Valve (YV 0504/2504) - The isolation valve for the ammonia supply to the TCO/SCR shall close upon detection of low or no air injection. • Low Temperature Interlock on SCR (Signal from TE 0336/2336) - The low temperature interlock on the selective catalytic reduction unit stops the injection of ammonia (Valves YV 0504/2504 are closed). • Protect ITS electrical components from damage by liquid sprays Reference: 24590-WTP-PSAR-ESH-01-002-04, Rev 4j, Section 4.4.3.3 and 4.4.24	

Equipment Safety Function Type	☒ Passive Mechanical	☒ Active Mechanical	☒ Electrical
	TCO Housing	Valves / Flow Meters YV 0504 / 2504 FT 0517 / 2517 FT 0518 / 2518	Temperature Element TE 0514 / 2514 TE 0336 / 2336

Seismic Safety Function	Seismic Operability Requirements		
☒ Yes ☐ No	☒ During Seismic Event	☒ After Seismic Event	☐ None

EQUIPMENT QUALIFICATION DATASHEET (EQD)

Equipment Environmental Qualification (EEQ)

(Parameter values stated in this section do not include process conditions or operation induced conditions)

Classification of Environment ☒ Mild ☐ Harsh	Qualified Life (years) ☐ 40 ☒ Other TCO Housing - 40 years Replacable Equipment: Less than 40 years Heaters Recuperative Heat Exchanger Catalyst

Parameter Type/Units	Parameter Value	Parameter Duration (number)	Duration Units	WTP Source Document Number
Normal Ambients				
High Temperature (°F)	83	Note 1a	Years	24590-HLW-U0D-W16T-00001
Low Temperature (°F)	59	Note 1a	N/A	24590-HLW-U0D-W16T-00001
High Relative Humidity (%RH)	100	Note 1a	N/A	24590-HLW-U0D-W16T-00001
Low Relative Humidity (%RH)	10	Note 1a	N/A	24590-HLW-U0D-W16T-00001
High Pressure (in.-w.g.)	0	Note 1a	N/A	24590-HLW-U0D-W16T-00001
Low Pressure (in.-w.g.)	-0.4	Note 1a	N/A	24590-HLW-U0D-W16T-00001
Radiation Dose Rate (mRad/hr)	0.5	40	Years (Note e1)	24590-HLW-U0D-W16T-00001
Plant/Process Induced Vibration	☐ Yes ☒ No			
Additional Normal Ambient Information:				
Abnormal Ambients				
High Temperature (°F)	137	8	hours / year	24590-HLW-U0D-W16T-00001
Low Temperature (°F)	40	Note 1a	N/A	24590-HLW-U0D-W16T-00001
High Relative Humidity (%RH)	100	Note 1a	N/A	24590-HLW-U0D-W16T-00001
Low Relative Humidity (%RH)	5	Note 1a	N/A	24590-HLW-U0D-W16T-00001
High Pressure (in.-w.g)	4	Note 1a	N/A	24590-HLW-U0D-W16T-00001
Low Pressure (in.-w.g)	-6.7	Note 1a	N/A	24590-HLW-U0D-W16T-00001
Radiation Dose Rate (mR/hr)	0.5	40 Note 4	Years (Note e1)	24590-HLW-U0D-W16T-00001
Exposure to Wet Sprinkler System	☒ Yes ☐ No	2 Note 5	hours	24590-HLW-U0D-W16T-00001
Additional Abnormal Ambient Information				
Design Basis Events (DBE) Ambients				
High Temperature (°F)	139	1000	hours	24590-HLW-U0D-W16T-00001
Low Temperature (°F)	40	Note 1a	N/A	24590-HLW-U0D-W16T-00001
High Relative Humidity (%RH)	100	482	hours	24590-HLW-U0D-W16T-00001

Low Relative Humidity (%RH)	5	1000	hours	24590-HLW-U0D-W16T-00001
High Pressure (in.-w.g)	4	1000	hours	24590-HLW-U0D-W16T-00001
Low Pressure (in.-w.g)	-6.7	1000	hours	24590-HLW-U0D-W16T-00001
Radiation Dose Rate (mR/hr)	0.5	0 Note 4	hours	24590-HLW-U0D-W16T-00001
Submergence	☒ Yes ☐ No 1.58'	1000	hours	24590-HLW-U0D-W16T-00001
Chemical/Spray Exposure	☐ Yes ☒ No	N/A	hours	N/A See Note 12
Additional DBE Information	Note 2 for pressure units			

DBE Chemical Exposure Details	
DBE Chemical Types / Concentrations	N/A

Electrical Interfaces Supporting the Safety Function	
Power Supply Voltage (VAC, VDC)	480 VAC
Power Supply Frequency (Hz)	60 Hz
Power Connection Method	3 Wired, solidly ground
I/O Signals to/from Equipment	BUYER
I/O Connection Method	BUYER

Mechanical Interfaces	
Mounting Configuration (orientation)	Horizontal
Mounting Method (bolts, welds, etc.)	Welded to embeds, See 24590-HLW-DD-S13T-00067
Auxiliary Devices	Lifting Lugs

Equipment Seismic Qualification (ESQ)

Parameter	Title	Reference/Document Number	Version / Revision	Remarks
WTP Seismic Design Specification	ENGINEERING SPECIFICATION FOR STRUCTURAL DESIGN LOADS FOR SEISMIC CATEGORY III & IV EQUIPMENT AND TANKS	24590-WTP-3PS-FB01-T0001	4	
Specified Seismic Load	ENGINEERING SPECIFICATION FOR	24590-WTP-3PS-FB01-	4	

EQUIPMENT QUALIFICATION DATASHEET (EQD)

Equipment Seismic Qualification (ESQ)				
Parameter	**Title**	**Reference/Document Number**	**Version / Revision**	**Remarks**
Parameters	STRUCTURAL DESIGN LOADS FOR SEISMIC CATEGORY III & IV EQUIPMENT AND TANKS	T0001		

Equipment Qualification Notes and Additional Information

1. General Notes:

a) For thermal aging, the high normal temperature shall be assumed to subsist for 40 years less the duration of the high abnormal temperature. For any lesser qualified life, the normal and abnormal condition durations shall be assigned proportionally. The abnormal temperature is stated to subsist for a certain number of hours per year. It shall be taken to subsist for this number of hours for each year of the qualified life.

b) The ability to provide the safety function at the low normal temperature, the low abnormal temperature or the low DBE temperature (whichever be the lowest) shall be established by test, analysis, or operating experience. The thermal aging at these respective low temperatures will be conservatively covered by the thermal aging per item a) above. Therefore, no duration is assigned for the low temperatures.

c) The ability to provide the safety function at the extremes of the normal and abnormal humidity conditions, taking into consideration the high and the low normal and high and low abnormal, shall be established by test, analysis, or operating experience. No duration is assigned for the normal and abnormal humidity conditions.

d) If the performance of the safety function of the equipment is affected by ambient pressure, the ability to provide the safety function at the extremes of the normal and abnormal pressure conditions, taking into consideration the high and the low normal and the high and low abnormal pressures, shall be established by test, analysis, or operating experience. No duration is assigned to the normal and abnormal pressure conditions.

e) (1) If the abnormal radiation dose rate is the same as the normal radiation dose rate, the normal radiation dose rate shall be assumed to subsist for 40 years, or any lesser qualified life, and the duration of the abnormal radiation dose rate is "0."

(2) If the abnormal radiation dose rate is higher than the normal radiation dose rate, the abnormal radiation dose rate shall be assumed to subsist for 40 years, or any lesser qualified life, and the duration of the normal radiation dose rate is "0."

f) The DBE conditions shall be taken to subsist for the stated number of hours following the qualified life of the equipment.

g) Spray due to fire sprinkler actuation shall be taken to occur once over the entire qualified life duration for a period of 2 hours, even if the qualified life is a period less than 40 years. If spray qualification is provided for DBE conditions (whether for water or chemical spray), then separate qualification for the fire sprinkler spray need not be provided.

h) The values stated in this EQD are the ambients and do not include the thermodynamic and radiation conditions imposed by the process fluids, self-heating, etc. The data pertaining to process fluid and service induced parameters are to be taken into account where significant, such as in thermal aging analyses. These data can be obtained from the equipment data sheets or the Equipment Specification.

i) Equipment that is to be installed in inaccessible locations must be qualified to a 40-year life without the need for maintenance or replacement.

2. Data to be provided by SELLER through the submittal process as required on the G-321-E form.

3. Where pressure is given in inches of water column (in-WC) in the source document, it is generally assumed that this is in reference to atmospheric pressure and is, therefore, equivalent to inches of water gage (in-WG).

4. Normal, abnormal, and DBE dose rates are the same; therefore, abnormal & DBE doses do not add to total integrated dose based on normal dose rate over 40 years.

5. Wet Fire Sprinkler system in room. Room wetted 2 hrs in 40 years via inadvertent actuation of fire sprinklers.

6. Fire Water spray is only spray present in the room.

7. Spray = Yes, if wet sprinklers or other liquid lines are present.

8. Vendor to determine impacts of submergence.

9. Environmental data provided is for room conditions only (does not reflect process conditions).

10. BUYER to assign doc number after receipt of seller submittal.

11. Deleted

12. Ammonia and nitric acid are listed in the HLW Room environment Data sheet, 24590-HLW-U0D-W16T-00001, Rev 1. The determination that the DBE exposure is N/A is as follows:

- The nitric acid pipe line identified in CCN 156336 is not located in room H-A123.
- Confinement of ammonia is achieved by designation of ammonia lines in HLW as SS and Seismic Category, SC-III. Additionally, circumferential breaks and leakage cracks need not be postulated in lines less than or equal to 1 inch nominal pipe size, per 24590-WTP-GPG-SANA-002, Section 3.3.3, Pipe Failures.

R11334856

ISSUED BY
RPP-WTP PDC

RIVER PROTECTION PROJECT – WASTE TREATMENT PLANT

ENGINEERING SPECIFICATION

FOR

HLW Thermal Catalytic Oxidizers/Reducers

Content applicable to ALARA? ☒ **Yes** ☐ **No**

ADR No.
24590-HLW-ADR-HV-02-002

Rev
1

Quality Level
CM
DOE Contract No. DE-AC27-01RV14136

NOTE: Contents of this document are Dangerous Waste Permit affecting.

REV	DATE	BY	CHECK	REVIEW	E&NS	QA	DPEM
1	2/25/11	Tim Henry	Dennis Rickettson	Grant Goolsby		N/A	J. Schneider ~~Janet Roth~~ DJR 2/25/11
0	5/4/09	Darryl Nelson	Dennis Rickettson	Grant Goolsby	Dick Carlstrom	N/A	Janet Roth

SPECIFICATION No.
24590-HLW-3PS-MBTV-T0002

Rev
1

Revision History

Revision	Reason for Revision
0	This new specification changed from Q to enhanced CM and deals with the TCO and Ammonia /Air Injection units for HLW only. Section 6, Tests and Inspections, is a complete re-write. Section 10, Submittals, is clarified by removing requirements which are redundant to the daughter specifications and adding detail to some requirements. Issued for Purchase
1	This revision incorporates the following: • TCN's 24590-CM-MRA-MBT0-00002-T0002, T0 004, T0007, & T0009, ~~SDDR #24590-WTP-SDDR-MS-10-00004, SDDR # 24590-WTP-SDDR-MS-10-00115~~ TH 3/11/11 • Revise sample tap size in paragraph 3.7.1.8 to match with suppliers P&ID submittal number 24590-CM-POA-MBT0-00002-04-00003 • Corrected typing error in section 3.7.1.9 • Incorporate by reference SDDR# 24590-WTP-SDDR-MS-10-00004, 24590-WTP-SDDR-MS-10-00115 Issued for Purchase

Notice

Please note that source, special nuclear, and byproduct materials, as defined in the Atomic Energy Act of 1954 (AEA), are regulated at the US Department of Energy (DOE) facilities exclusively by DOE acting pursuant to its AEA authority. DOE asserts, that pursuant to the AEA, it has sole and exclusive responsibility and authority to regulate source, special nuclear, and byproduct materials at DOE-owned nuclear facilities. Information contained herein on radionuclides is provided for process description purposes only.

Contents

Notice 1
1 Scope 4
1.1 Project Description and Location 4
1.2 Equipment, Material, and Services Required 4
1.3 Work by Others 6
1.4 Acronyms 6
1.5 Definitions 8
1.6 Safety/Quality Classifications 9
2 Applicable Documents 9
2.1 General 9
2.2 Industry Standards 9
2.3 Reference Documents/Drawings 11
3 Design Requirements 12
3.1 General 12
3.2 Offgas Treatment System Description 15
3.3 Basic Function 15
3.4 Performance 16
3.5 Design Conditions 17
3.6 Environmental Conditions 17
3.7 Mechanical Requirements 18
3.8 Loading 22
3.9 Electrical Requirements 22
3.10 Instrumentation and Control Requirements 23
3.11 Lifting Requirements 24
3.12 Thermal Analysis Requirements 24
3.13 Thermal Catalytic Oxidizer/Reducer Design Analysis Requirements 25
3.14 Accessibility and Maintenance 26
4 Materials 26
4.1 General 26
4.2 Construction 27
4.3 Prohibited Materials 27
4.4 Insulation 28
5 Fabrication 28
5.1 General 28

5.2 Welding 29
5.3 Painting 30
5.4 Assembly 30
6 Tests and Inspections 30
6.1 General 30
6.2 Personnel Qualifications 31
6.3 Non-Destructive Examinations 31
6.4 Shop Tests 32
6.5 Site Tests 35
7 Preparation for Shipment 35
7.1 General 35
7.2 Tagging 35
7.3 Documentation 36
8 Quality Assurance 36
8.1 General Requirements 36
8.2 Quality (CM) Requirements 36
8.3 Supplier Deviation 37
9 Configuration Management 37
10 Documentation and Submittals 37
10.1 General 37
10.2 Submittals 37
11 References 40

Figures

Deleted

Attachments

1. 24590-WTP-SRD-ESH-01-001-02, pages C.34-1 thru C.34-5, tailoring of ANSI-K61.1
2. 24590-WTP-SRD-ESH-01-001-02, pages C.26-1 thru C.26-7, tailoring of ASME-B31.3
3. 24590-WTP-SRD-ESH-01-001-02, page C.9-1, tailoring of AISC M016
4. HLW Skid Interface Connections
5. Connection For Non-Routine Sample Extraction
6. Connection For Sample Extraction-Permanent Typical
7. Certificate of Analysis for BASF Catalysts, LLC (VOCat 300S)

1 Scope

1.1 Project Description and Location

The Hanford Tank Waste Treatment and Immobilization Plant (WTP) is a complex of waste treatment facilities where the Department of Energy's (DOE) Hanford site tank waste will be pretreated and immobilized into stable glass form via vitrification. The WTP Contractor will design, build, and start up the WTP pretreatment and vitrification facilities for the US Department of Energy's (DOE) Office of River Protection (ORP). The waste treatment facilities will pre-treat and immobilize the Low-Activity Waste (LAW) and High-Level Waste (HLW) currently stored in underground storage tanks at the Hanford Site.

The Hanford Site occupies an area of about 560 square miles and is located along the Columbia River, north of the city of Richland. The WTP Facility will be constructed at the East End of the 200 East Area of the Hanford Site. Benton, Franklin, and Grant counties surround the Hanford Site.

1.2 Equipment, Material, and Services Required

This specification provides the requirements for the design, analysis, materials selection, appurtenances selection, project management, quality control, quality assurance, inspection, fabrication, testing and labeling of 2 ea. HLW Thermal Catalytic Oxidizers/Reducers and the associated Ammonia/Air Dilution Skids.

The scope of work for the SELLER includes all work specifically defined in this specification and its addenda and attachments. Work shall include, but is not limited to, the following:

1.2.1 NOT USED

1.2.2 High Level Waste: 2 ea. Thermal Catalytic Oxidizer/Reducer Skids, 24590-HLW-MX-HOP-SKID-00005 and 24590-HLW-MX-HOP-SKID-00007. 2 ea. Ammonia/Air Dilution Skids, 24590-HLW-MX-HOP-SKID-00006 and 24590-HLW-MX-HOP-SKID-00008. 2 ea. Heater Control Panels, HOP-PNL-00004 and HOP-PNL-00008 (if vendor panel is provided). Components are Seismic Category III as denoted on the MDS in Section 2 of the MR.

1.2.3 NOT USED

1.2.4 Provide an analysis from a Thermal Catalytic Oxidizer/Reducer expert of the design to determine expected catalyst changeout frequency.

1.2.5 NOT USED

1.2.6 NOT USED

1.2.7 NOT USED

1.2.8 NOT USED

1.2.9 NOT USED

1.2.10 NOT USED

1.2.11 Provide certified material test reports, welding procedures, insulation installation procedures, surface preparation and coating procedures, testing procedures, testing results, quality assurance procedures, quality assurance inspection results, and all other procedures and documentation required per this specification and its addenda and attachments.

1.2.12 Provide transportation, storage, and installation instructions for the Thermal Catalytic Oxidizers/Reducers and the Ammonia/Air Dilution Skids per manufacturer's recommendation and this specification.

1.2.13 Provide packaging and prepare the Thermal Catalytic Oxidizer/Reducers Skids, the Ammonia/Air Dilution Skids, control panels, shim pack, gaskets, special tools (if required), and catalyst bed for shipment to the WTP site. Packaging shall be sufficient to allow outdoor storage for a period of up to 12 months at the WTP site, without BUYER action except routine inspection. Environmental conditions for storage are found in Section 3.6 of this specification. SELLER shall provide specific guidelines for storage beyond 12 months.

1.2.14 Provide special tools required for installation and maintenance.

1.2.15 Provide Material Safety Data Sheets (MSDSs) for the catalyst cartridges and any other potentially hazardous chemicals or materials which will be delivered to the BUYER.

1.2.16 Provide a thermal analysis of the Thermal Catalytic Oxidizer/Reducer, and support frame in accordance with the requirements of this specification and Mechanical Data Sheets (MDSs) in Section 2 of the Material Requisition (MR). Select insulation material (i.e. calcium silicate, refractory brick, mineral wool, etc.) to meet thermal requirements of this specification.

1.2.17 Provide detailed installation procedure for insulation, complete with design drawings and insulation map.

1.2.18 Provide a seismic analysis of the Thermal Catalytic Oxidizer/Reducer and ammonia supply/dilution skids in accordance with the requirements of this specification.

1.2.19 Provide shop painting of carbon steel surfaces.

1.2.20 Provide an equipment reliability assessment for all major components and subcomponents including expected catalyst life of the Thermal Catalytic Oxidizers/Reducers. The definition of components and sub-components is at SELLER's discretion.

1.2.21 Provide junction boxes to accommodate wiring to remote-mounted SELLER control panel. SELLER shall provide wiring schedule, diagrams, and documentation to facilitate installation of wiring from equipment to remote control panel.

1.2.22 Provide ASME Sec VIII and B31.3 analysis of the Thermal Catalytic Oxidizer/Reducer and the associated Ammonia/Air Dilution supply piping in accordance with the requirements of this specification.

1.3 Work by Others

Specific activities and materials excluded from the scope of this specification include:

1.3.1 Shipping to WTP jobsite

1.3.2 Material unloading and storage at jobsite

1.3.3 Installation labor

1.3.4 Foundation embeds

1.3.5 NOT USED

1.3.6 NOT USED

1.3.7 Ammonia vapor supply to skid connection

1.3.8 Electric power supply

1.3.9 Off skid external wiring

1.3.10 External connection to BUYER's instrumentation and controls

1.3.11 Installation of supplier provided removable / replaceable insulation for flanges, manholes, doors, access openings, as required.

1.3.12 ABB Control System Components, software and programming for normal (PCJ) and safety control (PPJ) systems

1.3.13 Containment Tent, portable HEPA filter exhauster

1.3.14 Grounding cable

1.4 Acronyms

AISC	American Institute of Steel Construction
ANSI	American National Standards Institute
ASME	American Society of Mechanical Engineers
ASTM	American Society for Testing and Materials
AWS	American Welding Society
CGD	Commercial Grade Dedication
CM	Commercial

COA	Certificate of Analysis
DBE	Design Basis Event
DRE	Destruction and Removal Efficiency
FAT	Factory Acceptance Test
FF	Foundation® Fieldbus
FMEA	Failure Mode and Effects Analysis
HEPA	High Efficiency Particulate Air
HLW	High Level Waste
ISA	Instrument Service Air
LAW	Low Activity Waste
MACT	Maximum Achievable Control Technology
MDS	Mechanical Data Sheet
MR	Material Requisition
MSDS	Material Safety Data Sheet
MTBF	Mean-Time Between Failure
NACE	National Association of Corrosion Engineers
NDE	Non-Destructive Examination
NEMA	National Electrical Manufacturers Association
NFPA	National Fire Protection Association
NOx	Nitrogen Oxides
P&ID	Piping and Instrumentation Diagram
PCJ	Process Control System
PIP	Process Industry Practices
PMI	Positive Material Identification
PPE	Personnel Protection Equipment
PPJ	Programmable Protection System

PQR	Procedure Qualification Record
PSA	Process Service Air
QAP	Quality Assurance Program
Q	Quality
QL	Quality Level
RPP	River Protection Project
SC	Safety Class
SCO	Selective Catalytic Oxidation
SCR	Selective Catalytic Reduction
SDDR	Supplier Deviation Disposition Request
SS	Safety Significant
SSCs	Systems, Structures, and Components
SVOCs	Semi-Volatile Organic Compounds
TCO	Thermal Catalytic Oxidizer
UL	Underwriters Laboratories, Inc.
VOCs	Volatile Organic Compounds
VSL	Vitreous State Laboratory
WAC	Washington Administrative Code
WPS	Welding Procedure Specification
WTP	Hanford Tank Waste Treatment and Immobilization Plant

1.5 Definitions

The equipment covered by this specification will be used in the WTP, where the following definitions are applicable:

Quality Level (QL): The quality level identifies the quality requirements to be applied to the equipment. The identified quality levels are Q (Quality), and CM (Commercial). Quality requirements are specifically defined on the associated MDSs and supplier Quality Assurance Program (QAP) requirements data sheets.

Seismic Category (SC): Specific requirements for each seismic category are defined in reference documents listed in Sections 2.3.12 and 2.3.26 of this specification.

Thermal Catalytic Oxidizer/Reducer Expert: One who has extensive knowledge regarding the characteristics and application of Thermal Catalytic Oxidizers/Reducers. Must have a minimum of five (5) years experience.

1.6 Safety/Quality Classifications

1.6.1 Refer to the MDS in Section 2 of the MR for Safety Class, Quality Level and Seismic Category classifications related to the HLW Thermal Catalytic Oxidizers/Reducers and the Ammonia/Air Dilution skids.

1.6.2 NOT USED

2 Applicable Documents

2.1 General

2.1.1 Work shall be done in accordance with the referenced codes, standards, and documents listed below, which are an integral part of this specification.

2.1.2 When specific chapters, sections, parts, or paragraphs are listed following a code, industry standard, or reference document, only those chapters, sections, parts, or paragraphs of the document are applicable and shall be applied. For the codes and standards listed in Section 2, the specific revision or effective date identified shall be followed. If a date or revision is not identified, the latest issue, including addenda, at the time of quotation, shall apply.

2.2 Industry Standards

2.2.1 AISC M016 - 9th Edition, *Manual of Steel Construction, Allowable Stress Design*, as tailored in Appendix C of 24590-WTP-SRD-ESH-01-001-02, *Safety Requirements Document Vol. II* (see Attachment 3)

2.2.2 NOT USED

2.2.3 NOT USED

2.2.4 NOT USED

2.2.5 NOT USED

2.2.6 ASME B31.3 – 1996, *Process Piping Code*, as tailored in Appendix C of 24590-WTP-SRD-ESH-01-001-02, *Safety Requirements Document Vol. II* (see Attachment 2)

2.2.7 ASME B & PVC, Section VIII-200, Division 1: *Rules for Construction of Pressure Vessels*

2.2.8 NOT USED

2.2.9 ASME Y14.100-2004, *Engineering Drawing Practices*

2.2.10 ASTM – E84-08, *Surface Burning Characteristics of Building Materials*

2.2.11 ASTM - A240-07, *Heat-Resisting Chromium and Chromium-Nickel Stainless Steel Plate, Sheet, and Strip for Pressure Vessels*

2.2.12 AWS D1.6-1999, *Structural Welding Code, Stainless Steel*

2.2.13 NOT USED

2.2.14 NEMA 250-2003, *Enclosures for Electrical Equipment (1,000 Volts Maximum)*

2.2.15 NOT USED

2.2.16 NFPA 70 – 1999, *National Electrical Code*

2.2.17 NFPA 497-2007, *Recommended Practice for Classification of Hazardous Locations for Electrical Installations in Chemical Process Areas*

2.2.18 NOT USED

2.2.19 UL 467-2007, *Standard for Safety Grounding and Bonding Equipment*

2.2.20 UL 508-2007, *Standard for Safety Electric Industrial Control Equipment*

2.2.21 UL 508A-2007, *Standard for Industrial Control Panels*

2.2.22 ANSI K61.1 - 1999, *Safety Requirements for the Storage and Handling of Anhydrous Ammonia*, as tailored in Appendix C of 24590-WTP-SRD-ESH-01-001-02, *Safety Requirements Document Vol. II* (see Attachment 1)

2.2.23 IEEE 384-1992, *Standard Criteria for Independence of Class 1E Equipment and Circuits*, as tailored in referenced specification 24590-WTP-3PS-EKP0-T0001

2.2.24 NOT USED

2.2.25 NOT USED

2.2.26 NOT USED

2.2.27 NOT USED

2.2.28 NOT USED

2.2.29 NOT USED

2.2.30 NOT USED

2.2.31 AWS D1.1-2000, *Structural Welding Code – Steel*

2.2.32 29 CFR 1910, *Occupational Safety and Health Standards for General Industry*

2.3 Reference Documents/Drawings

2.3.1 24590-WTP-3PS-AFPS-T0001, *Engineering Specification for Shop Applied Special Protective Coating for Steel Items and Equipment*

2.3.2 24590-WTP-3PS-G000-T0001, *General Specification for Supplier Quality Assurance Program Requirements*

2.3.3 24590-WTP-3PS-G000-T0002, *General Specification for Positive Material Identification (PMI)*

2.3.4 24590-WTP-3PS-G000-T0003, *Engineering Specification for Packaging, Handling and Storage Requirements*

2.3.5 24590-WTP-3PS-JQ07-T0001, *Engineering Specification for Instrumentation for Package Systems*

2.3.6 24590-WTP-3PS-EKP0-T0001, *Engineering Specification for Electrical Requirements for Packaged Equipment*

2.3.7 NOT USED

2.3.8 24590-WTP-3PS-NN00-T0001, *Engineering Specification for Thermal Insulation for Mechanical Systems*

2.3.9 24590-WTP-3PS-PS02-T0001, *Engineering Specification for Shop Fabrication of Piping*

2.3.10 24590-WTP-3PS-SS00-T0001, *Engineering Specification for Welding of Carbon Structural Steel*

2.3.11 24590-WTP-3PS-SS00-T0002, *General Specification for Welding of Structural Stainless Steel and Welding of Structural Carbon Steel to Structural Stainless Steel*

2.3.12 24590-WTP-3PS-FB01-T0001, *Engineering Specification for Structural Design Loads for Seismic Category III & IV Equipment and Tanks*

2.3.13 24590-WTP-3PS-NWP0-T0001, *Engineering Specification for General Welding and NDE Requirements for Supplier Fabricated Piping*

2.3.14 NOT USED

2.3.15 24590-WTP-3PS-MV00-T0001, *Engineering Specification for Pressure Vessel Design and Fabrication*

2.3.16 24590-WTP-3PS-MVB2-T0001, *Engineering Specification for Welding of Pressure Vessel, Heat Exchangers and Boilers*

2.3.17 NOT USED

2.3.18 NOT USED

2.3.19 NOT USED

2.3.20 NOT USED

2.3.21 NOT USED

2.3.22 NOT USED

2.3.23 VSL-08R1390-1 *Small Scale Melter Testing for Allyl Alcohol Method Verification*

2.3.24 NOT USED

2.3.25 NOT USED

2.3.26 24590-WTP-3PS-MV00-T0002, *Engineering Specification for Seismic Qualification Criteria for Pressure Vessels*

2.3.27 24590-WTP-LIST-CON-08-0001, *Restricted Materials List WTP Safety Assurance*

2.3.28 24590-WTP-3PS-JQ06-T0005, *Environmental Qualification of Control and Electrical Systems and Components*

2.3.29 24590-WTP-3PS-G000-T0015, *Environmental Qualification of Mechanical Equipment*

3 Design Requirements

3.1 General

3.1.1 The Thermal Catalytic Oxidizers/Reducers and the associated Ammonia/Air Dilution units shall be designed per this specification, the applicable documents listed in Section 2 of this specification, and the MDSs in Section 2 of the MR.

3.1.2 The WTP facility is designed for a minimum service life of 40 years. Structural and pressure boundary components related to the Thermal Catalytic Oxidizer/Reducer and the associated Ammonia/Air Dilution units shall be engineered with a design life of 40 years. Catalyst used in the Thermal Catalytic Oxidizers/Reducers shall have a minimum design life of one year. Other mechanical components shall have a minimum service life of five years with periodic maintenance. Components that cannot be guaranteed for a minimum service life of five years shall be identified in accordance with the following requirements:

- Failure rate or Mean-Time Between Failure (MTBF), whichever is available, and the basis for the rate including specific references to any sources.
- Estimated modes of failure (example, dielectric breakdown, element overheat, etc.). This may be delineated in a Failure Mode and Effects Analysis (FMEA). The method used to perform the FMEA (Example, MIL-STD-1629) and the year shall be specified. All assumptions used to perform the FMEA shall be clearly stated.

- Recommended maintenance and frequency, as applicable.
- Estimated time to perform the recommended maintenance, as applicable.

The data above shall be based on the physical and environmental conditions delineated in this specification and MDSs. Where possible, the SELLER shall compare the figures for the equipment in this specification to similar equipment sold and serviced by the SELLER. The source for all estimates and any underlying assumptions shall be stated. If software is used to perform the FMEA, the SELLER shall specify the software used and the version (example software, Relex, Isogen, Reliasoft, etc.).

3.1.3 Operation of the Thermal Catalytic Oxidizers/Reducers and the associated Ammonia/Air Dilution units shall be continuous for one year. Refer to MDSs in Section 2 of the MR for thermal cyclic conditions.

3.1.4 The thermal and seismic analyses to be provided per this specification must verify that the final detailed design of the Thermal Catalytic Oxidizers/Reducers and the associated Ammonia/Air Dilution units meet the requirements set forth in this specification and its addenda and attachments.

3.1.5 The maximum pressure drops across the Thermal Catalytic Oxidizers/Reducers shall be in accordance with the requirements of the MDSs.

3.1.6 The following requirements shall be met:

- Pressure boundary shall be designed in accordance with the requirements of ASME B&PVC, Section VIII, Div. 1 and BUYER specification 24590-WTP-3PS-MV00-T0001, *Engineering Specification for Pressure Vessel Design and Fabrication*. Code stamp is not required

- Non-Destructive Examination (NDE) requirements for the pressure boundary shall be in accordance with BUYER specification 24590-WTP-3PS-MV00-T0001, *Engineering Specification for Pressure Vessel Design and Fabrication*, Commercial Grade (CM) Vessels

- Seismic analysis shall be per BUYER specification 24590-WTP-3PS-MV00-T0002, *Engineering Specification for Seismic qualification Criteria for Pressure Vessels*

- The structure supporting the pressure boundary shall be designed per BUYER specification 24590-WTP-3PS-MV00-T0002, Section 7.2.2, *Engineering Specification for Seismic Qualification Criteria for Pressure Vessels*

3.1.7 Penetrations in the pressure boundary (i.e. access doors, sample ports, etc.) shall be designed and reinforced in accordance with the requirements of ASME B&PVC, Section VIII, Div. 1, and BUYER specification 24590-WTP-3PS-MV00-T0001, *Engineering Specification for Pressure Vessel Design and Fabrication*. In addition, access doors shall be designed for ease of operation by one person.

3.1.8 If determined necessary by thermal analysis, SELLER shall design the Thermal Catalytic Oxidizers/Reducers to be externally insulated so the external surface temperature does not exceed 140°F. Insulation shall meet applicable requirements of BUYER specification

24590-WTP-3PS-NN00-T0001 *Engineering Specification for Thermal Insulation for Mechanical Systems.*

3.1.9 Internal bracing shall be minimized. Where internal bracing is required, bracing members of circular cross section are preferred.

3.1.10 NOT USED

3.1.11 NOT USED

3.1.12 The SELLER shall select insulation and design the Thermal Catalytic Oxidizers/Reducers and support frame to prevent the BUYER's concrete foundation from reaching a maximum temperature of 150°F.

3.1.13 SELLER shall design and supply necessary outlet piping for sample nozzles located downstream of the recuperative heat exchanger required for ammonia control. SELLER shall include pipe supports and Tied Expansion joints for both the offgas process inlet and outlet connections. Tied Expansion joints shall be 2 ply or greater.

3.1.14 The following are the Safety Significant functions of the HLW Thermal Catalytic Oxidizer/Reducer and the Ammonia/Air Dilution units. (Note: Only root components are listed below. See P&ID 24590-HLW-M6-HOP-00008 / -20008 for the remaining components):

a) Confinement of Melter Offgas: TCO housing, piping, and appurtenances shall be designed to maintain offgas confinement during normal operation, and during and after a seismic event. Structural failure of internals shall not breach confinement boundary.

b) Confinement of Ammonia: The ammonia supply piping, valves, and appurtenances shall maintain confinement of ammonia during normal operation, and during and after a seismic event.

c) Heater High Temperature Interlock: TE0514(Z), JY0520(Z), TE2514(Z), JY2520(Z). Heater to be shut down at a given high temperature setpoint to prevent an over temperature condition.

d) Low Dilution Air Flow Interlock: YV0504(Z), YV2504(Z), YV0509(Z), YV2509(Z), FT0517(Z), FT2517(Z), FT0518(Z), FT2518(Z). Ammonia supply to be shut off at a given low dilution air flow setpoint.

e) NOT USED

f) Low SCR Temp Interlock: TE0336(Z), TE2336(Z). Ammonia supply to be shut off at a given low SCR temperature setpoint.

g) NOT USED

h) NOT USED

i) NOT USED

3.1.15 NOT USED

3.2 Offgas Treatment System Description

Offgas is generated from the vitrification of radioactive waste in Joule heated ceramic melters.

3.2.1 NOT USED

3.2.2 HLW Thermal Catalytic Oxidizer/Selective Catalytic Reduction Units:

The feed to the HLW Thermal Catalytic Oxidizer/Reducer is primarily melter offgas that has been treated by a Submerged Bed Scrubber (SBS), Wet Electrostatic Precipitator (WESP), High Efficiency Mist Eliminator (HEME), HEPA Filters, Activated Carbon Bed Adsorber, and Silver Mordenite column.

3.3 Basic Function

Each Thermal Catalytic Oxidizer/Reducer unit shall consist of four primary components, a recuperative heat exchanger, electric heater, VOC selective catalytic oxidation (SCO) bed, and NO_X selective catalytic reduction (SCR) bed. The rating of each component shall be determined by the SELLER to meet the performance requirements specified in Section 3.4 of this specification. SELLER shall also include ammonia dilution and mixing appurtenances necessary to meet performance requirements of this specification.

3.3.1 Recuperative Heat Exchanger

The recuperative heat exchanger is primarily employed to recover heat from the SCR hot exhaust gas for the Thermal Catalytic Oxidation/Reducer unit. The heat exchanger shall cool down the hot SCR exhaust gas and heat the incoming offgas.

3.3.2 Electric Heater

The electric heater is downstream of the recuperative heat exchanger and is employed to heat the offgas feed to the final desired oxidation and reduction temperatures. After startup, the electric heater shall function as a trim control to raise the offgas temperature to the required oxidizing temperature. Required oxidizing and reduction temperatures shall be per performance criteria specified in Section 3.4 of this specification.

3.3.3 Oxidation Catalyst

The SCO, containing oxidation catalyst, is downstream of the Electric Heater and will oxidize volatile and semi-volatile organic compounds creating water and carbon dioxide. The residence time and number of catalyst beds shall be as specified in Section 3.4 of this specification.

3.3.4 NO_X Selective Catalytic Reduction Unit

The SCR, containing reduction catalyst, is downstream of the Oxidation Catalyst and shall use ammonia injection to reduce the NO_X to Nitrogen, Oxygen, and water through catalytic reaction with ammonia.

3.3.5 Ammonia Dilution System

The BUYER will supply ammonia gas to the HLW SCRs. SELLER shall specify dilution air flow rates and pressures if required for the Ammonia/Air Dilution system. SELLER shall supply necessary equipment required to meet performance requirements.

3.4 Performance

3.4.1 Refer to the Thermal Catalytic Oxidizers/Reducers MDSs for design data and gas stream properties.

3.4.2 The organic Destruction and Removal Efficiency (DRE) performance shall be based on inlet loadings specified in the MDSs.

3.4.3 The Thermal Catalytic Oxidizers/Reducers shall meet the DRE for Volatile Organic Compounds (VOCs) and Semi-Volatile Organic Compounds (SVOCs) as required in the MDSs as well as residence time and minimum oxidizing temperatures specified.

3.4.4 The NOx SCR unit shall meet the reduction efficiency at less than the specified ammonia slip concentration required in the MDSs.

3.4.5 Detection limits used to verify the Thermal Catalytic Oxidizers/Reducers guaranteed performance shall be based on BUYER information (MDS General Note 9).

3.4.6 SELLER shall provide curves plotting efficiency versus inlet operating temperature for the Thermal Catalytic Oxidizer and Selective Catalytic Reducer catalysts.

3.4.7 SELLER shall provide ammonia slip curves for SCR performance.

3.4.8 NOT USED

3.4.9 NOT USED

3.4.10 The ammonia slip exiting the HLW systems shall be specified by the SELLER to meet the NOx reduction efficiencies specified in Section 3.4.4 of this specification.

3.4.11 BUYER's residence time, specified in the MDSs, is the minimum for VOC and SVOC destruction and therefore shall be used by SELLER if it exceeds the SELLER's calculated required residence time.

3.4.12 As specified in the MDSs, concentrations of certain chemical compounds are subject to large step increases and spikes. The SELLER's calculation shall account for these increases and spikes.

3.4.13 SELLER shall identify if additional NOx analyzers are required outside the boundaries of the SELLER's equipment to meet the specified NO_X reduction efficiency and ammonia slip MDS requirements. SELLER shall obtain BUYER's approval for additional NO_X analyzers.

3.5 Design Conditions

3.5.1 Refer to the Thermal Catalytic Oxidizers/Reducers and the associated Ammonia/Air Dilution MDSs in Section 2 of the MR.

3.5.2 NOT USED

3.5.3 Shim plates will be placed on the BUYERS foundation embed plates for leveling the HLW TCO skids and the HLW TCO ammonia skids. The SELLER shall provide the shim plates and the design detailing how the shims are welded to the BUYERS embed plates and how the equipment is connected to the shim plates.

The embed plate design location and elevation for HLW TCO skids and ammonia skids is shown on drawing 24590-HLW-DD-S13T-00067. The design elevation for the top of the embed plates is 0 feet - 0 inches, in plant elevation. The existing embed elevations vary from plate to plate. Some embed plates are on design elevation, some embed plates are 1/8 inch low and some embeds are 1/4 inch low. To account for embed elevations and waviness of the concrete floor the bottom elevation for the HLW TCO skids and the HLW TCO ammonia skids shall be set at + 0 feet, +1/2 inch in plant elevation.

The BUYERS existing embed plates for the HLW TCO skids and HLW TCO ammonia skids are coated carbon steel plates, stock code: EBPNS01CH, shown on drawing 24590-PTF-DD-S13T-00201. The carbon steel embed plates are coated with one layer of inorganic zinc primer. When attachments are welded to the existing embed plates, WTP site welding procedures require inorganic zinc primer to be removed within 2- 4 inches of the weld area. Only carbon steel can be welded to the carbon steel embed plates where the inorganic zinc primer has been removed. It is acceptable to weld a carbon steel skid frame or stainless steel skid frame to the top of the carbon shim welded to the BUYERS embed.

SELLER shall provide shims specified below for the HLW TCO skids and HLW TCO ammonia skids. The shims are generic and can be used under any skid frame as required.

All shim material shall be carbon steel, ASTM A572, grade 50, bare steel, no coating required. Shim thickness is nominal.

(13) 1/2 inch thick shims (this quantity includes 2 spare shims)
(24) 5/8 inch thick shims (this quantity includes 4 spare shims)
(3) 3/4 inch thick shims (this quantity includes 2 spare shims)

3.5.4 NOT USED

3.6 Environmental Conditions

3.6.1 The Thermal Catalytic Oxidizer/Reducer Skids and Ammonia/Air Dilution Skids will be located indoors. Refer to MDSs for specific room environmental design conditions.

3.6.2 Thermal Catalytic Oxidizers/Reducers and components, except catalysts, and the Ammonia/Air Dilution Skids may be stored outdoors prior to installation at ambient extreme temperatures ranging from minus 23°F dry-bulb to 113°F dry-bulb and a relative humidity of 0 to 100%.

3.6.3 Refer to Sections 3.7, 3.9 and 3.10 of this engineering specification for enclosure, instrumentation and electrical requirements and related environmental qualification requirements.

3.6.4 Safety Significant instrumentation that is required to meet environmental qualification shall be qualified in accordance with engineering specification 24590-WTP-3PS-JQ06-T0005, *Engineering Specification for Environmental Qualification of Control and Electrical Systems and Components.*

3.7 Mechanical Requirements

3.7.1 General

3.7.1.1 Due to access restrictions for installation, the Thermal Catalytic Oxidizer/Reducer units shall be fabricated in such a manner that will allow delivery in three to five sections that comply with the bounding dimensions specified in MDSs. Each section of the Thermal Catalytic Oxidizer/Reducer shall be skid mounted.

3.7.1.2 The catalyst bed shall be designed for manual removal and replacement. The catalyst bed shall be designed to meet service life requirements outlined in Section 3.1.2 of this specification. The weight of a catalyst module shall not exceed 50 pounds for lifting manually. BUYER prefers side access for replacing the catalysts. If weights exceed 50 pounds, lifting beams or rigs shall be designed and supplied by the SELLER.

3.7.1.3 SELLER shall provide transitions for connection to BUYER's piping and gas analyzer instrumentation. All flanges required for connection to BUYER's piping and gas analyzers shall have raised face flanges. See Attachment 4 (HLW Skid Interface Connections). See also Attachments 5 and 6 (Connection for Non-Routine Sample Extraction and Connection for Sample Extraction - Permanent Typical, respectively) for non-routine and permanent analyzer connection details.

3.7.1.4 SELLER shall provide TCO drain lines. Drain lines shall be welded to the housing at low points. Penetrations by drains shall be arranged and individually sealed so that catalysis beds cannot be bypassed. Drain lines shall be piped to skid edge and flanged.

3.7.1.5 NOT USED

3.7.1.6 SELLER shall design and supply recuperative heat exchanger outlet piping as specified in the MDSs. Pipe fabrication and supports shall be designed in accordance with ASME B31.3 and BUYER specification 24590-WTP-3PS-PS02-T0001 *Shop Fabrication of Piping*, and be included in the SELLER's scope of supply. SELLER shall include pipe supports and tied expansion joints for both offgas process inlet and outlet connections.

3.7.1.7 Mechanical components required to meet the Safety Significant functions of containment of melter offgas shall be designed and fabricated to meet environmental qualifications in accordance with engineering specification 24590-WTP-3PS-G000-T0015, *Engineering Specification for Environmental Qualification of Mechanical Equipment.*

3.7.1.8 A containment tent or series of containments tents will be erected by the BUYER to control the work area for catalyst removal and replacement after permanent installation of the TCO units. The BUYER will supply and set up a portable HEPA filtered exhauster for containment tent ventilation with discharge port monitoring. The TCO unit will be ventilated using permanently installed process fans. Prior to opening the catalyst access doors on the TCO unit, the TCO unit air will be sampled using an up stream, 1/4 inch pre-installed sample tap. The air sample will be used to determine the level of airborne radioactive material inside the TCO unit. After the air samples are taken and deemed acceptable, opening the catalyst access doors will take place inside the containment tent once stable air flow conditions are established.

The SELLER shall supply the following for each TCO unit:

- One 3/4 inch air sample tap per TCO unit. Include one 3/4 inch ball valve. The sample tap shall extend 12 inches inside the TCO unit. The accessible end of the 3/4 inch ball valve shall include a cap. There shall be at least 3 inches of clearance, for tightening bolts, between the insulating jacketing and the underside of the flange.

Catalyst removal / installation:

- The catalyst bed (s) shall be designed for manual removal and replacement without entering the TCO unit for contact maintenance. It is acceptable for hands and arms to break the plane of the catalyst access door to reach inside the TCO to operate jack bolts with hand tools or use tools with extended handles to remove /replace catalyst modules. It is acceptable to split the movable catalyst frame to minimize the weight of the frame being moved for catalyst module removal / replacement. Pulling the Catalyst module forward to unsnap the tongue and groove connection is not desirable. A jack bolt system that applies pressure to the movable frame to hold the catalyst modules in place is desired.

3.7.1.9 To facilitate process troubleshooting and to obtain additional data during testing and operations, the SELLER shall supply the following for each TCO unit:

- One thermowell between each of the VOC catalyst beds to be provided to take temperature readings during non-routine evolutions. Thermowells shall be located to minimize flow disturbance and not interfere with the manipulation of the catalyst access doors. The location shall consider optimum accessibility. However, it is acceptable to locate the thermowell on the top of the TCO.

- One sample port between each of the VOC catalyst beds to be used to measure offgas concentrations during non-routine evolutions. Sample ports shall be located to minimize flow disturbance and not interfere with the manipulation of the catalyst access doors. The location shall consider optimum accessibility. However, it is acceptable to locate the sample ports on the top of the TCO. Include ball valve, blind flange, gaskets and bolts for each sample port. See Attachment 5 (Connection for Non-Routine Sample Extraction) for temporary connection details.

3.7.2 Recuperative Heat Exchanger

3.7.2.1 Unless otherwise specified, the heat exchanger pressure boundary shall be designed in accordance with ASME B&PVC, Section VIII, Div. 1.

3.7.2.2 The recuperative heat exchangers in the Thermal Catalytic Oxidizer/Reducer units are expected to have a design life of 40 years. If the design life is less than 40 years, the SELLER shall provide provisions for cleaning, maintenance, repair or unit replacement. The SELLER shall submit options for cleaning, maintenance, repair or provisions for total unit replacement of the recuperative heat exchanger. Options to be considered, but not limited to, include:

- Body flanges that allow for total unit replacement,
- Clean out doors for maintenance access,
- Automatic wash systems/particulate collection hoppers, and
- Bolted connection to skid support frame.

3.7.2.3 Heat exchangers shall be designed for full differential pressure, with one side at the design pressure and the other side at atmospheric pressure.

3.7.2.4 NOT USED

3.7.2.5 NOT USED

3.7.2.6 NOT USED

3.7.3 Ammonia/Air Dilution Equipment

3.7.3.1 Design and fabrication of ammonia piping and valves shall be in accordance with ANSI K61.1, ASME B31.3, and BUYER specification 24590-WTP-3PS-PS02-T0001, *Shop Fabrication of Piping.*

3.7.3.2 NOT USED

3.7.3.3 Piping and components required for the HLW Ammonia/Air Dilution shall be located on a separate skid away from the Thermal Catalytic Oxidizer/Reducer skid. Refer to MDS for space envelope and equipment layout requirements. SELLER shall include necessary equipment to meet performance requirements of this specification.

3.7.3.4 NOT USED

3.7.3.5 NOT USED

3.7.3.6 NOT USED

3.7.3.7 NOT USED

3.7.3.8 NOT USED

3.7.3.9 NOT USED

3.7.3.10 NOT USED

3.7.3.11 NOT USED

3.7.3.12 NOT USED

3.7.3.13 NOT USED

3.7.3.14 NOT USED

3.7.3.15 NOT USED

3.7.3.16 NOT USED

3.7.3.17 NOT USED

3.7.3.18 NOT USED

3.8 Loading

3.8.1 The Thermal Catalytic Oxidizers/Reducers (24590-HLW-MX-HOP-SKID-00005/7) and the associated Ammonia/Air Dilution assemblies shall be self-supporting, capable of carrying the static loads of components and the stress imposed during shipment, installation, and operation. See Section 2.3.26.

3.8.2 The Thermal Catalytic Oxidizer/Reducer and the associated Ammonia/Air Dilution skids shall be designed in accordance with the requirements of specification 24590-WTP-3PS-FB01-T0001, *Structural Design Loads for Seismic Category III & IV Equipment and Tanks.*

3.8.3 The SELLER shall provide a seismic analysis in accordance with Section 3.8.2 of this specification. The SELLER shall provide the documented results of the seismic analysis in report form to the BUYER.

3.8.4 The Thermal Catalytic Oxidizer/Reducer units shall be designed in accordance with the nozzle load requirements as specified in the MDSs in Section 2 of the MR.

3.9 Electrical Requirements

3.9.1 Electrical components and appurtenances furnished with the Thermal Catalytic Oxidizer/Reducer and the associated Ammonia/Air Dilution units shall conform to the requirements of specification 24590WTP-3PS-EKP0-T0001, *Electrical Requirements for Packaged Equipment.* Electrical components shall also meet applicable sections of NFPA 70, and requirements outlined in NFPA 497.

3.9.2 Electric heaters shall be of the element type and mounted on removable flanged plates for ease of maintenance. BUYER will supply a 480V 3-wire wye grounded power circuit. If SELLER's supplied heaters are rated for a lower voltage, SELLER shall supply the necessary components to step the electricity down to the necessary voltage.

3.9.3 Electrical enclosures shall be NEMA 4X rated.

3.9.4 The Thermal Catalytic Oxidizer/Reducer control panel components shall be UL 508 listed and certified. Control panels as a whole shall be UL 508A labeled.

3.9.5 Safety Significant electrical systems/components are required to meet environmental qualification and shall be qualified in accordance with engineering specification 24590-WTP-3PS-JQ06-T0005, *Engineering Specification for Environmental Qualification of Control and Electrical Systems and Components.*

3.9.6 NOT USED

3.9.7 SELLER shall provide a grounding lug or boss, in accordance with UL 467, on the equipment housing or frame to facilitate attachment of grounding cable by the BUYER.

3.9.8 SELLER shall provide total electric load for each Thermal Catalytic Oxidizer/Reducer.

3.10 Instrumentation and Control Requirements

3.10.1 Instrumentation and controls furnished with the Thermal Catalytic Oxidizer/Reducer and the associated Ammonia/Air Dilution units shall meet the requirements of engineering specification 24590-WTP-3PS-JQ07-T0001,Rev. 2, *Instrumentation for Package Systems*. BUYER shall provide the appropriate ABB control system components (i.e. I/O modules, power supplies) to the SELLER for fabrication into the SELLER's heater control panel as described in Section 3.4.2.1.1 of 24590-WTP-3PS-JQ07-T0001, Rev. 2. SELLER shall provide non-ABB manufactured equipment (fiber optic converters, fiber optic patch cables and plates, terminals, circuit breaker, wiring, etc.) and panel fabrication.

3.10.2 SELLER shall design the heater control panel to utilize the ABB control system equipment and provide a panel arrangement drawing with Bill of Material identifying all parts to be provided by the BUYER. SELLER shall provide an I/O list on the panel arrangement drawing for all instruments. Reference BUYER's P&IDs in Section 2 of the MR for additional information regarding instrument locations and types.

3.10.3 SELLER shall provide control narrative, logic drawings, termination drawings, and related items as specified in 24590-WTP-3PS-JQ07-T0001, *Instrumentation for Package Systems* for normal (PCJ) and safety control system (PPJ) operation. BUYER shall provide programming for normal operation (PCJ) via software included with BUYER supplied ABB components, and for safety operation via BUYER's safety control system (PPJ), according to SELLER's specification of the monitoring and control requirements. BUYER shall provide controller, software, and attend and support the factory test of the equipment at the SELLER's facility.

3.10.4 NOT USED

3.10.5 In-line instruments shall be wired or tubed to the skid edge. Tubing shall terminate with a bulkhead connection. Wiring shall terminate in a junction box.

3.10.6 NOT USED

3.10.7 NOT USED

3.10.8 NOT USED

3.10.9 NOT USED

3.10.10 NOT USED

3.10.11 NOT USED

3.10.12 NOT USED

3.10.13 NOT USED

3.10.14 Safety Significant instrumentation is required to meet environmental qualification and shall be qualified in accordance with engineering specification 24590-WTP-3PS-JQ06-T0005, *Engineering Specification for Environmental Qualification of Control and Electrical Systems and Components.*

3.11 Lifting Requirements

3.11.1 Lifting lugs shall be installed on the Thermal Catalytic Oxidizers/Reducers and Ammonia/Air Dilution skid packages for balanced lifting and handling. SELLER shall identify the weight and center of gravity of each package. All lifting points shall be designed in accordance with the requirements of BUYER specification 24590-WTP-3PS-G000-T0003, *General Specification for Packaging, Handling, and Storage Requirements.*

3.11.2 Lifting eyes or lugs shall be certified to be suitable for the safe, balanced lifting and handling of the equipment without distortion or damage to the components.

3.11.3 All lifting attachments shall have either a safety factor of three (3), based on material ultimate strength, or five (5), based on the material yield strength, whichever is more conservative. The lifting points and center of gravity shall have a label clearly identifying its safe working load.

3.11.4 Lifting lugs must accept standard commercial lifting equipment. Chain blocks or braiding shall not be permitted.

3.11.5 The lifting lugs for the packages must be accessible from the top, without removal of components or covers.

3.11.6 NOT USED

3.11.7 SELLER to provide calculations for the lift lug design.

3.12 Thermal Analysis Requirements

3.12.1 Method of thermal analysis shall be proposed by the SELLER.

3.12.2 Refer to MDS for thermal analysis technical information and heat loss requirements (i.e. thermal conductivity values, room temperatures, etc.).

3.12.3 The thermal analysis shall include the effects of stresses resulting from potential variations in temperatures due to startup, normal operation, shutdowns, and thermal cycling of the

Thermal Catalytic Oxidizer/Reducer. Analysis shall show that the Thermal Catalytic Oxidizers/Reducers are adequate for the design life specified in Section 3.1.2 of this specification. Analysis shall also establish design temperature of the TCOs.

3.12.4 The thermal analysis shall include thermal expansion of the Thermal Catalytic Oxidizers/Reducers and resulting nozzle loadings in X, Y, and Z planes with deflections at normal operating conditions and design conditions.

3.12.5 NOT USED

3.12.6 The thermal analysis shall determine the thickness and extent of insulation required on the sides, ends, top and bottom of the Thermal Catalytic Oxidizers/Reducers to ensure that the insulation jacket temperature and all exterior uninsulated portions with potential for personnel exposure, do not exceed 140 °F at maximum design temperature.

3.12.7 The thermal analysis shall determine the thickness and extent of insulation required on the bottom of the Thermal Catalytic Oxidizers/Reducers so that the temperature of the concrete does not exceed 150 °F.

3.12.8 The SELLER shall provide the documented results of the thermal analysis in report form to the BUYER. The thermal analysis report shall provide a complete thermal analysis of the Thermal Catalytic Oxidizers/Reducers and shall include 3-D graphical results of models and all calculations performed, as applicable to the analysis approach chosen.

3.12.9 All assumptions shall be plainly identified and data presented (including their uncertainty) with precise logic.

3.12.10 The final thermal analysis report shall convey information to several disciplines, many of whom may be less familiar with the general subject than the authors. Care shall be taken to use simple statements and expressions and to make statements as concise as possible. If highly technical terms are necessary, they shall be adequately explained and defined.

3.13 Thermal Catalytic Oxidizer/Reducer Design Analysis Requirements

3.13.1 The SELLER shall conduct and submit Thermal Catalytic Oxidizer/Reducer design analyses for the HLW units. The design analysis of the Thermal Catalytic Oxidizers/Reducers shall be conducted by a Thermal Catalytic Oxidizer/Reducer expert to determine the expected catalyst changeout frequency for the final Thermal Catalytic Oxidizer/Reducer design. SELLER shall provide personnel qualifications to the BUYER for review.

3.13.2 Analysis shall be conducted considering operation of the Thermal Catalytic Oxidizers/Reducers at design conditions outlined in this specification and MDSs.

3.13.3 Analysis shall determine expected catalyst changeout frequency based on the gas composition and load information specified in the MDSs in Section 2 of the MR.

3.13.4 The design analysis for expected catalyst changeout shall assume that the offgas flow through the Thermal Catalytic Oxidizers/Reducers may vary as much as ±10% from the design flowrate specified in the MDSs in Section 2 of the MR.

3.13.5 The SELLER shall provide the documented results of the Thermal Catalytic Oxidizer/Reducer analysis with any graphical results, as applicable, in report form to the BUYER prior to fabrication.

3.14 Accessibility and Maintenance

3.14.1 BUYER's layout allows for necessary access and space requirements to facilitate maintenance during normal plant operation or scheduled shutdown.

3.14.2 Supplier's recommended accessibility and maintenance requirements for each piece of equipment shall be included in the SELLER's design and shown on layout drawings. Side access for replacement of the catalyst and related gaskets is required.

3.14.3 NOT USED

3.14.4 SELLER shall provide instructions and frequency of maintenance including lubrication, rotation, heating, and any other type of preventative maintenance that will preserve the equipment until the time it is put into operation, including:

- Up to 12 months outdoor storage prior to installation
- Outdoor preservation maintenance and inspection schedule
- Indoor (installed) but not operating preservation maintenance and inspection schedule
- Operating preservation maintenance and inspection schedule

3.14.5 Frequency of inspection and maintenance intervals during operation shall be in accordance with equipment SELLER's recommendations.

3.14.6 Equipment, instrumentation, and electrical components that are six feet over from ground level and require routine maintenance shall be provided with permanent work platforms with fixed ladders/stairs to perform maintenance.

3.14.7 Maintenance platforms and ladders, if applicable per 3.14.6, shall be designed to meet the requirements set forth in 29 CFR 1910, Occupational Safety and Health Standards for General Industry and AISC 9th Edition.

3.14.8 The maintenance platforms, if applicable per 3.14.6, shall be attached without welding after the equipment is installed in the HLW facility.

4 Materials

4.1 General

4.1.1 SELLER shall comply with specification 24590-WTP-3PS-G000-T0002, *Positive Material Identification (PMI)*.

4.2 Construction

4.2.1 Materials of construction shall have properties suitable for the service conditions defined in the MDSs.

4.2.2 The ASME and/or ASTM material numbers and grades shall be identified and a "Manufacturer's Material Certificate of Compliance" shall be provided for the housing, ducts, weld filler metal, and support framing integral to the Thermal Catalytic Oxidizer/Reducer and the associated Ammonia/Air Dilution assemblies. Material designations shall be indicated on the fabrication drawings and in the material lists.

4.2.3 Thermal Catalytic Oxidizer/Reducer and the associated Ammonia/Air Dilution skids shall be fabricated from structural steel shapes and plates properly reinforced to be self-supporting, capable of carrying the static loads of components and the stresses imposed during shipment, installation, and operation.

4.2.4 Thermal Catalytic Oxidizer/Reducer and the associated Ammonia/Air Dilution housings and outlet piping shall be fabricated from materials specified in the MDSs in Section 2 of the MR.

4.2.5 NOT USED

4.2.6 Where the BUYER has not specified material types, the SELLER shall select materials giving consideration to the design life of the equipment, compatibility with adjacent materials, compatibility with the process materials and conditions, environmental conditions, and coating requirements.

4.3 Prohibited Materials

4.3.1 As applicable, mercury, zinc, cadmium, or other low melting point materials and halogens shall not be used in direct contact with stainless steel. This prohibition also applies to use of tools, fixtures, paints, coatings and sealing compounds, and any other equipment or materials used by the SELLER in handling, assembly and storage of stainless steel parts or components.

4.3.2 Asbestos shall not be used in any component of the Thermal Catalytic Oxidizers/Reducers, the associated Ammonia/Air Dilution units, and appurtenances.

4.3.3 The prohibited materials list excludes materials that might be used for bearings. brazed joints, or instruments.

4.3.4 The equipment provided to the BUYER shall not contain any of the materials listed in 24590-WTP-LIST-CON-08-0001, *Restricted Materials List WTP Safety Assurance* unless BUYER (Safety Assurance) approval is obtained.

4.4 Insulation

4.4.1 The SELLER shall provide detailed insulation installation procedures complete with drawings showing methods and details for applying and securing insulation. Installation procedures and drawings shall include details related to applying and securing metal jacketing (if externally insulated), to the Thermal Catalytic Oxidizers/Reducers. The insulation procedures shall be in accordance with BUYER specification 24590-WTP-3PS-NN00-T0001 *Thermal Insulation for Mechanical Systems*, and this specification. The insulation installation procedures shall be reviewed by the BUYER prior to commencement of work to install insulation on the Thermal Catalytic Oxidizers/Reducers.

4.4.2 SELLER shall provide shop fabricated and installed insulation to the maximum extent possible, in an effort to minimize field insulation.

4.4.3 NOT USED

4.4.4 NOT USED

4.4.5 Provide for removable/replaceable insulation on flanges, manholes, doors, and access openings.

4.4.6 DELETED

4.4.7 DELETED

4.4.8 DELETED

4.4.9 DELETED

4.4.10 NOT USED

4.4.11 NOT USED

4.4.12 NOT USED

4.4.13 NOT USED

4.4.14 DELETED

5 Fabrication

5.1 General

5.1.1 Fabrication of the thermal catalytic oxidizer/reducer units shall be in accordance with the requirements of 24590-WTP-3PS-MV00-T0001, *Engineering Specification for Pressure Vessel Design and Fabrication.*

5.1.2 Fabrication of piping shall meet the requirements of BUYER specifications 24590-WTP-3PS-PS02-T0001 Shop Fabrication of Piping, 24590-WTP-3PS-NWP0-T0001 *General Welding and NDE Requirements for Supplier Fabricated Piping*, and ASME B31.3.

5.1.3 NOT USED

5.1.4 NOT USED

5.1.5 All stainless steel metal working, grinding, cutting, machining and welding shall use tools and consumables dedicated and segregated from all others to prevent cross contamination. A dedicated work area for tools, equipment storage, parts storage and raw materials must be established to control contamination. Welding consumables for stainless steel welding must be segregated from other consumables.

5.2 Welding

5.2.1 Design and fabrication of the TCO pressure boundary shall be in accordance with specification 24590-WTP-3PS-MV00-T0001, *Pressure Vessel Design and Fabrication*

5.2.2 Welding of the TCO pressure boundary shall be in accordance with specification 24590-WTP-3PS-MVB2-T0001, *Welding of Pressure Vessels, Heat Exchangers and Boilers.*

5.2.3 Fabrication of TCO piping shall be in accordance with 24590-WTP-3PS-PS02-T0001, *Shop Fabrication of Piping.*

5.2.4 Welding and NDE of TCO piping shall be in accordance with specification 24590-WTP-3PS-NWP0-T0001, *General Welding and NDE Requirements For Supplier Fabricated Piping.*

5.2.5 Procedures for welding, control and storage of filler material, nondestructive examination (NDE) and postweld heat treatment (PWHT) are not required for commodities obtained from a sub-supplier which are not part of the external pressure boundary. Commodities which are not part of the external pressure boundary including the following, but are not limited to the: recuperative heat exchanger, electric heater, catalyst modules. Although procedures for welding of the recuperative heat exchanger are not required to meet basic requirements as stated above, weld procedures for the recuperative heat exchanger shall be submitted to the buyer for review. WTP has decided to go above the basic requirements by reviewing the recuperative weld procedures.

5.2.6 NOT USED

5.2.7 NOT USED

5.2.8 NOT USED

5.2.9 NOT USED

5.2.10 Welding of carbon structural steel shall be in accordance with AWS D1.1 and specification 24590-WTP-3PS-SS00-T0001, *Welding of Carbon Structural Steel.*

5.2.11 Welding of structural stainless steel shall be in accordance with AWS D1.6 and BUYER specification 24590-WTP-3PS-SS00-T0002, *Welding of Structural Stainless Steel and Welding of Structural Carbon Steel to Structural Stainless Steel.*

5.2.12 NOT USED

5.2.13 NOT USED

5.3 Painting

5.3.1 Shop painting shall be in accordance with 24590-WTP-3PS-AFPS-T0001, Shop Applied Special Protective Coating for Steel Items and Equipment.

5.3.2 NOT USED

5.4 Assembly

5.4.1 NOT USED

5.4.2 NOT USED

5.4.3 NOT USED

5.4.4 The Thermal Catalytic Oxidizers/Reducers and the associated Ammonia/Air Dilution units shall have edges that are both smooth and not sharp to the touch.

5.4.5 NOT USED

5.4.6 NOT USED

6 Tests and Inspections

6.1 General

6.1.1 The SELLER shall provide all instruments, cables, and facilities necessary to perform any shop tests, the Factory Acceptance Tests (FAT) and NDE.

6.1.2 SELLER shall provide the necessary hardware, fan, pre heater, power, controls, temporary insulation, piping, and ductwork for the HLW TCOs and test equipment to set up and operate the HLW TCOs at the design conditions specified in the HLW MDS at the supplier's shop. The HLW TCOs shall operate at a negative pressure so the test shall include a temporary fan(s) setup which meets the HLW MDS design conditions and a temporary pre-heater to simulate the hot gas from the melters (as specified in the MDS).

6.1.3 SELLER shall provide the necessary hardware, power, controls and test equipment to set up and operate the Instrument Service Air (ISA) supply on the Ammonia/Air Dilution Skid at the conditions prescribed in the MDS.

6.1.4 Any non-conforming work shall be redone by the SELLER at SELLER's cost.

6.2 Personnel Qualifications

6.2.1 NDE personnel performing NDE shall work in accordance with the following BUYER specifications:

- 24590-WTP-3PS-MV00-T0001, *Pressure Vessel Design and Fabrication,*
- 24590-WTP-3PS-MVB2-T0001, *Engineering Specification for Welding of Pressure Vessel, Heat Exchangers and Boilers,*
- 24590-WTP-3PS-SS00-T0001, *Engineering Specification for the Welding of Carbon* Structural *Steel,*
- 24590-WTP-3PS-SS00-T0002, *Engineering Specification for the Welding of Structural Stainless Steel and Welding of Structural Carbon Steel to Structural Stainless Steel,*
- 24590-WTP-3PS-NWP0-T0001, *Engineering Specification for General Welding and NDE Requirements for Supplier Fabricated Piping*, and
- 24590-WTP-3PS-PS02-T0001, *Engineering Specification for Shop Fabrication of Piping.*

6.3 Non-Destructive Examinations

6.3.1 NDE shall be in accordance with the following BUYER specifications:

- 24590-WTP-3PS-MV00-T0001, *Pressure Vessel Design and Fabrication,*
- 24590-WTP-3PS-MVB2-T0001, *Engineering Specification for Welding of Pressure Vessel, Heat Exchangers and Boilers,*
- 24590-WTP-3PS-SS00-T0001, *Engineering Specification for the Welding of Carbon* Structural *Steel,*
- 24590-WTP-3PS-SS00-T0002, *Engineering Specification for the Welding of Structural Stainless Steel and Welding of Structural Carbon Steel to Structural Stainless Steel,*
- 24590-WTP-3PS-NWP0-T0001, *Engineering Specification for General Welding and NDE Requirements for Supplier Fabricated Piping*, and
- 24590-WTP-3PS-PS02-T0001, *Engineering Specification for Shop Fabrication of Piping.*

6.3.2 NDE procedures shall be submitted to BUYER for review prior to use.

6.3.3 Submittal of exposed radiographs is required. Original set of exposed radiographic film must be sent, along with technique and reader sheets. Film must be packaged in such a manner as to preclude moisture and handling damage.

6.4 Shop Tests

6.4.1 SELLER shall perform the FAT that demonstrates the function of the equipment. These tests shall be conducted in accordance with Section 6 of 24590-WTP-3PS-JQ07-T0001 Rev. 2, Section 6 of 24590-WTP-3PS-EKP0-T0001, Rev. 3, and additional requirements identified within this specification.

6.4.2 BUYER's Supplier Quality (SQ) representative shall witness the FAT, and BUYER's Engineering shall be present for the Functional Testing portion of the FAT.

6.4.3 Prior to notification by SELLER that a unit is ready for the BUYER to witness the Functional Test portion of the FAT, SELLER shall perform all other FAT mechanical and electrical inspections to ensure completed equipment is functioning and ready for the Functional Test. Any deficiencies shall be corrected prior to the Functional Test.

6.4.4 SELLER shall have unit up and ready for Functional Testing prior to the BUYER's team arriving on the day the Functional Test is to commence.

6.4.5 SELLER shall submit FAT inspection plan and Functional Test procedure for BUYER review prior to use by the SELLER. SELLER shall provide a signed copy of completed FAT inspection report (information only) to BUYER at time of notification that SELLER is ready for the Functional Test.

6.4.6 SELLER shall submit a report of FAT results.

6.4.7 Functional Test procedures shall be prepared by the SELLER in accordance with 24590-WTP-3PS-JQ07-T0001, Rev. 2, Section 11.3.2. As stated in 24590-WTP-3PS-JQ07-T0001, Rev. 2, the scope of functional testing shall be agreed to between the BUYER and SELLER via review of the proposed test procedure.

6.4.8 The following is a list of preliminary BUYER expectations for the HLW TCO Functional Test. This list is subject to change by the BUYER during review of proposed test procedure. Changes to these expectations, agreed to during review of the proposed test procedure, do not need to be reflected in a revision to this specification.

a. Test setup shall simulate the melter operating conditions per the mechanical data sheet.

i. Pressure testing shall be performed in accordance with required testing specified in ASME B31.3-1996 or ASME BPV Code Section VIII Division I as applicable. In addition to these codes required pressure tests, additional testing shall be performed to further demonstrate the pressure boundary integrity of equipment which will be subject to internal pressure above atmospheric during normal equipment operation. Record on FAT datasheet.

ii. Sensitive Leak Testing shall be performed on piping in accordance with ASME B31.3-1996 Section 345.8. Record on FAT datasheet.

iii. Bubble Testing shall be performed on equipment designed and fabricated in accordance with ASME BPV Code Section VIII, Division I in accordance with ASME BPV Code Section V, Article 10. Record on FAT datasheet.

iv. Obtain unit pressure drop measurements at ambient conditions and at heatup intervals specified by the BUYER. Record on FAT datasheet.

v. Obtain catalyst bed seal measurements at ambient conditions and at heatup interval specified by the BUYER. Record on FAT datasheet.

vi. Preheat the incoming air, prior to HOP-HTR-00001 and HOP-HTR-00007, to simulate the hot offgas from the melter.

vii. Provide power and temporary controls for heater HOP-HTR-00001 and HOP-HTR-00007.

viii. Run the HLW TCO for 24 hours under this setup, prior to test objective testing.

b. Test objectives:

i. Verify the TCO heater, HOP-HTR-00001 and HOP-HTR-00007 provides the required heat to maintain temperature within the operating range as specified on the MDS.

ii. Verify the melter maximum flowrate of approximately 3092 ACFM can be achieved. The flowrate provided here is for information only and subject to change. Refer to the MDS for the actual flowrate.

iii. Verify the actual differential pressure drop is less than the allowable differential pressure drop of 12 inch water gauge. The pressure drop provided here is for information and subject to change. Refer to the MDS for the actual pressure drop. Record on FAT datasheet.

iv. Verify the TCO outlet temperature at TE 0336 or TE 2336 is less than 426 °F. The temperature provided here is for information and subject to change. Refer to the MDS for the actual temperature. Record on FAT datasheet.

v. NOT USED

vi. Verify no leaks at the access doors under operating conditions. Ultrasonic leak detectors like AccuTrak VPE-1000, SON-TECTOR 123 or equal are acceptable for leak testing around the access door gaskets.

vii. Verify unit pressure drop is within acceptable limits as stated in BUYER-approved FAT. Record on FAT datasheet.

viii. Verify the floor temperature under the TCO is less than 150°F. Record on FAT datasheet.

c. After the TCO unit has cooled, verify unit pressure drop is within acceptable limits as stated in BUYER-approved FAT. Record on FAT datasheet.

d. After the TCO unit has cooled, verify no deformation or degradation to the housing and internal components. Document findings on FAT datasheet.

e. After the TCO unit has cooled, obtain catalyst bed seal measurements and compare to measurements taken in Section 6.4.8.a.ii. Record on FAT datasheet.

f. After the TCO unit has cooled, demonstrate the catalyst can be removed and replaced with out a person breaking the plane of the access doors. It is acceptable if arms break the access door plane during catalyst removal or installation.

   i. Supplier to submit a catalyst installation and removal procedure.

6.4.9 The following is a list of expectations for the Ammonia Skid Functional Test. This list is subject to change by the BUYER during review of proposed test procedure. Changes to these expectations, agreed to during review of the proposed test procedure, do not need to be reflected in a revision to this specification.

a. Test set up:

   i. Pressure testing shall be performed in accordance with required testing specified in ASME B31.3-1996 or ASME BPV Code Section VIII Division I as applicable. In addition to these codes required pressure tests, additional testing shall be performed to further demonstrate the pressure boundary integrity of equipment which will be subject to internal pressure above atmospheric during normal equipment operation. Record on FAT datasheet.

   ii. Sensitive Leak Testing shall be performed on piping in accordance with ASME B31.3-1996 Section 345.8. Record on FAT datasheet.

   iii. It is acceptable to use temporary air and controls to open and close valves on the Ammonia/Air Dilution Skid.

b. The SELLER shall provide the following air source:

   i. NOT USED

   ii. Dry, oil and dust-free Instrument Service Air (ISA) at 90-150 psig and with a dew point value of -40°F at 100 psig based on ISA 7.0.01.

c. Test objectives:

   i. Satisfactory results for 6.4.9.a criterion stated above.

   ii. Actuated valves are full-cycled a minimum of 3 times and flow instrument loops respond per the design.

6.4.10 NOT USED

6.4.11 NOT USED

6.4.12 NOT USED

6.4.13 SELLER provided lifting equipment such as, but not limited to, spreader beams, strong backs, and yokes, shall be tested in accordance with Section 9.4 of 24590-WTP-3PS-G000-T0003.

6.4.14 All overhead lifting points shall be proof tested. Test and examination certificates/documentation shall be provided to the BUYER for review. Lifts shall be conducted in accordance with a BUYER reviewed handling procedure.

6.4.15 Deleted

6.4.16 After the proof tests, the lifting points shall be inspected:

6.4.17 The welds on fabricated lifting lugs shall be dye penetrant tested. Acceptance criteria shall be from the prevailing weld design code or standard.

6.4.18 Lift points shall be inspected for visual permanent plastic deformation of the material that may invalidate the design analyses for the lift point.

6.5 Site Tests

6.5.1 The BUYER startup personnel shall perform acceptance tests after initial installation to confirm the Thermal Catalytic Oxidizers/Reducers and the associated Ammonia/Air Dilution units meet the performance requirements specified in Section 3.4 of this specification.

7 Preparation for Shipment

7.1 General

The Thermal Catalytic Oxidizers/Reducers, catalysts, assemblies and the associated Ammonia/Air Dilution units shall be packaged, handled, and stored in accordance with BUYER specification 24590-WTP-3PS-G000-T0003, *Engineering Specification for Packaging, Handling, and Storage Requirements*.

7.2 Tagging

7.2.1 A stainless steel nameplate shall be attached in a visible location to each Thermal Catalytic Oxidizer/Reducer and Ammonia/Air Dilution unit showing the manufacturer's name, shop location, date of manufacture, serial number, equipment rating, equipment tag numbers, weight of assembly and purchase order number. Instruments shall be tagged per 24590-WTP-3PS-JQ07-T0001, Rev. 2, Section 8.

7.2.2 Electrical/Control panels shall be tagged with component identification numbers per 24590-WTP-3PS-JQ07-T0001, Rev. 2, Section 3.6.8.

7.2.3 Mechanical subcomponents (valves, strainers, expansion/flex joints, filters, mixing chambers, etc) shall have component identification number engraved on a 1/16" minimum thick stainless steel tag with ¼" minimum character height, securely attached with 1/16" minimum diameter aircraft cable and ferrules.

7.2.4 Component identification numbers shall be as shown on BUYER's P&IDs or MDSs attached to the MR, or will be provided via BUYER mark up of SELLER submitted drawings.

7.3 Documentation

SELLER shall ensure that appropriate documentation is prepared and signed by the appropriate person(s), if required. The shipping documentation shall accurately reflect specific traceability to the items being shipped. Drawings (wiring diagrams), showing external terminations for BUYER use to connect to SELLER provided instrumentation, shall be marked with the BUYER's instrument tag numbers.

8 Quality Assurance

8.1 General Requirements

8.1.1 The SELLER's QAP Requirements are included in BUYER specification 24590-WTP-3PS-G000-T0001, *General Specification for Supplier Quality Assurance Program Requirements*.

8.1.2 SELLER's QAP Manual shall be submitted to BUYER for review in accordance with BUYER specification 24590-WTP-3PS-G000-T0001, *General Specification for Supplier Quality Assurance Program Requirements*.

8.1.3 SELLER's QAP, as a minimum, shall contain the requirements detailed on the CM Datasheet of Quality Assurance Program Requirements, attached to Section 2 of the MR.

8.1.4 For items designated quality level commercial (CM), no additional QA program requirements are mandated by BUYER beyond SELLER's commercial QA program.

8.2 Quality (CM) Requirements

8.2.1 SELLER shall have in place a QAP meeting the requirements of BUYER specification 24590-WTP-3PS-G000-T0001, *General Specification for Supplier Quality Assurance Program Requirements*.

8.2.2 NOT USED

8.2.3 The successful bidder must pass a pre-award survey by the BUYER. SELLER shall demonstrate that its quality program is in compliance with the quality requirements listed in the Supplier Quality Assurance Program Requirements Data Sheet.. The SELLER shall allow the BUYER, its agent, and DOE access to their facility and records pertaining to this purchase order for the purpose of Quality Assurance Audits and Surveillance at mutually agreed times.

8.2.4 SELLER shall submit their QAP and work plan to BUYER for review prior to commencement of work. The plan shall include documents and procedures to implement the work and include a matrix of essential Quality Assurance elements cross referenced with the documents/procedures.

8.2.5 NOT USED

8.2.6 NOT USED

8.2.7 NOT USED

8.3 Supplier Deviation

Each SELLER shall be required to identify and promptly document all deviations from the requirements of the procuring documents. In addition, the supplier shall be required to describe the recommended disposition for BUYER's acceptance based on appropriate analysis. Submittals of request for deviations from lower-tier suppliers shall be through the prime supplier to WTP. SELLER-proposed deviations from procurement documents shall be initiated by use of Supplier Deviation Disposition Request (SDDR) form in Section 2 of the MR.

9 Configuration Management

Equipment and/or components covered by this specification are identified with plant item numbers shown in the MDSs. Each item shall be identified in accordance with Tagging in Section 7.2 of this specification.

10 Documentation and Submittals

10.1 General

SELLER shall submit to BUYER Engineering and Quality Verification documents in the forms and quantities shown in Form G-321-E, *Engineering Document Requirement*, and Form G-321-V, *Quality Verification Document Requirements*, attached to the MR.

10.2 Submittals

The SELLER shall submit the following:

10.2.1 Drawings

Drawings shall be in accordance with ASME Y14.100 and show the following information:

10.2.1.1 The outline dimensions of each Thermal Catalytic Oxidizer/Reducer and Ammonia/Air Dilution units, including outline and detail drawings for each component. These drawings shall reflect the "as-shipped" configuration of the equipment and instrumentation.

10.2.1.2 Details of construction.

10.2.1.3 Mounting dimensions and information required for the design of supports and foundations.

10.2.1.4 Operating weight and center of gravity of each Thermal Catalytic Oxidizer/Reducer and Ammonia/Air Dilution unit.

10.2.1.5 The space required for the removal of components.

10.2.1.6 The location of access doors.

10.2.1.7 Thermal insulation and interface points with BUYER's foundation.

10.2.1.8 NOT USED

10.2.1.9 NOT USED

10.2.1.10 Wiring and schematic diagrams. Diagrams shall include wire gauges and fuse sizes applicable to the supplied units only.

10.2.1.11 The ASTM or equivalent designation for materials.

10.2.1.12 Nozzle locations for connections to BUYER's process and utility piping including electrical and instrumentation connections.

10.2.1.13 Piping and instrumentation diagrams (P&IDs).

10.2.2 Procedures

Procedures shall include but are not limited to:

10.2.2.1 SELLER's shipping preparation and storage procedures.

10.2.2.2 Startup, operation, shutdown and idle procedures/manual.

10.2.2.3 Catalyst changeout procedures.

10.2.2.4 Performance test procedures and acceptance criteria for shop tests.

10.2.2.5 Insulation installation procedures.

10.2.2.6 Surface preparation and coating procedures for components specifically fabricated for the TCOs/SCRs.

10.2.3 Inspection and Test Reports

10.2.3.1 NOT USED

10.2.3.2 NOT USED

10.2.3.3 Performance test reports for shop tests.

10.2.3.4 NOT USED

10.2.3.5 Reliability assessment.

10.2.3.6 NOT USED

10.2.3.7 NOT USED

10.2.4 Calculations

10.2.4.1 Seismic and Thermal analyses/calculations shall be submitted for BUYER's review and permission to proceed. Analyses shall include nozzle loadings and deflections for normal operation and design conditions.

10.2.4.2 NOT USED

10.2.4.3 NOT USED

10.2.5 Manuals

Manuals and instructions shall include:

10.2.5.1 Erection and installation manuals which provide complete, detailed procedures for installing and placing equipment in initial operation. The manuals shall include all erection and installation drawings. Refer to BUYER specification 24590-WTP-3PS-G000-T0003 *General Specification for Packaging, Handling and Storage Requirement*, for additional requirements.

10.2.5.2 Operation, accessibility and maintenance manuals which provide complete, detailed descriptions of components and appurtenances with data sheets showing design, construction and performance data for equipment. Manuals shall include drawings required for operation, maintenance and repair, maintenance requirements, instructions and operational troubleshooting guides.

10.2.5.3 Instruction manuals shall cover items purchased, including materials that the SELLER has obtained from a subcontractor. The SELLER shall obtain such manuals and lists, and submit them to the BUYER.

10.2.5.4 The SELLER shall provide instructions regarding transportation, site storage and preparation, and protection of equipment after installation and prior to operation. Refer to BUYER specification 24590-WTP-3PS-G000-T0003 *General Specification for Packaging, Handling and Storage Requirement*, for additional requirements.

10.2.6 Certificates of Conformance and Acceptance

10.2.6.1 SELLER shall provide Certificates of Conformance demonstrating compliance with all applicable standards, specifications, and drawings.

10.2.6.2 SELLER shall certify lifting eyes or lugs and/or spreader bars are suitable for the safe, balanced lifting, and handling of the equipment.

10.2.6.3 Attachment 7 provides the Certificate of Analysis (COA) for BASF Catalysts, LLC (VOCat 300S) used in Catholic University's Vitreous State Laboratory (VSL) testing. Prior to release for shipment SELLER shall provide the COA demonstrating the performance of the oxidation catalyst is equal to or better than the oxidation catalyst used in the reference VSL testing (Ref. MDS General Note 9) for BUYER's acceptance.

10.2.7 Schedules

Lists and schedules shall include:

10.2.7.1 Schedule of engineering and fabrication.

10.2.7.2 Parts list, and cost for parts and items subject to deterioration and replacement.

10.2.7.3 List of recommended spare parts. The spare parts list shall include names of the original equipment manufacturer with appropriate part numbers.

10.2.8 Materials Certificates/Statistics

10.2.8.1 Material Certificate of Compliance shall be submitted for components of each Thermal Catalytic Oxidizer/Reducer unit and each Ammonia/Air Dilution unit. Certificate shall include certified material test reports of chemical and physical properties for all stress components.

10.2.8.2 Manufacturer's Material Certificate of Compliance with ASME and/or ASTM material numbers and grades shall be provided for the housing, ducts, weld filler metal, and support framing integral to each Thermal Catalytic Oxidizer/Reducer and each Ammonia/Air Dilution assembly.

10.2.8.3 Material Safety Data Sheets (MSDSs).

10.2.9 Data

Data shall include:

10.2.9.1 BUYER's Mechanical Data Sheets, completely filled out by the SELLER, showing all information required to determine that the units are of the design and materials specified herein.

10.2.9.2 All data compiled during FAT testing.

10.2.9.3 NOT USED

10.2.10 NOT USED

11 References

Design changes incorporated by reference:

24590-WTP-SDDR-MS-10-00004

34.0 ANSI K61.1, American National Standard Safety Requirements for the Storage and Handling of Anhydrous Ammonia

Revision: 1999
Sponsoring Organization: Compressed Gas Association, Inc.

WTP Specific Tailoring

The following tailoring of ANSI K61.1 is required for use by the WTP project as an implementing standard for the safety related systems design.

Page 9; Section 5.1 Equipment and systems

Revise Section 5.1 as follows:

Not Applicable

Justification: Section allows the continued use or reinstallation of containers and systems designed and installed under earlier versions of codes and ANSI standards. WTP does not plan on using previously installed or design equipment. Therefore, Section 5.1 of this standard will not be implemented for this project.

Page 19; Section 6.3 Pressure relief devices

Revise Section 6.3.2 as follows:

Not Applicable

Justification: Section specifies relief valve design for underground containers. WTP does not plan to install underground containers. Therefore, Section 6.3.2 of this standard will not be implemented for this project.

Revise Section 6.3.3 as follows.

Not Applicable

Justification: Section specifies manhole design for relief for underground containers. WTP does not plan to install underground containers. Therefore, Section 6.3.3 of this standard will not be implemented for this project.

Page 19; Section 6.4 Installation of storage containers

Revise Section 6.4.4 as follows:

Not Applicable

Justification: Section specifies design requirements for the installation of underground containers. WTP does not plan to install underground containers. Therefore, Section 6.4.4 of this standard will not be implemented for this project.

Revise Section 6.4.5 as follows:

Not Applicable

Justification: Section specifies design requirements for the installation of underground containers. WTP does not plan to install underground containers. Therefore, Section 6.4.5 of this standard will not be implemented for this project.

Revise Section 6.4.7 as follows:

Not Applicable

Justification: Section specifies design requirements for the installation of underground storage systems. WTP does not plan to install underground storage system. Therefore, Section 6.4.7 of this standard will not be implemented for this project.

Revise Section 6.4.8 as follows:

Not Applicable

Justification: Section specifies design requirements for the installation of underground tanks. WTP does not plan to install underground tanks. Therefore, Section 6.4.8 of this standard will not be implemented for this project.

Page 20; Section 6.5 Reinstallation of containers

Revise Section 6.5 as follows:

Not Applicable

Justification: Section specifies requirements for reinstallation of containers. WTP does not plan to use previously used containers. Therefore, Section 6.5 of this standard will not be implemented for this project.

Pages 21-26; Section 7 Refrigerated storage

Revise Section 7 as follows:

Not Applicable

Justification: This section establishes design requirements for system using tanks for the storage of anhydrous ammonia under refrigerated conditions. WTP does not plan on a system using tanks for the storage of anhydrous ammonia under refrigerated conditions. Therefore, Section 7 of this standard will not be implemented for this project.

Pages 26-28; Section 8 Systems mounted on railcar structures (tank cars), other than DOT class 106A, for transportation of ammonia

Revise Section 8 as follows:

Not Applicable

Justification: This section establishes design requirements for tank cars for the rail transportation of ammonia. WTP does not plan to receive anhydrous ammonia by rail car. Therefore, Section 8 of this standard will not be implemented for this project

Pages 31-32; Section 10 Systems using DOT portable tanks and cylinders

Revise Section 10 as follows:

Not Applicable

Justification: This section establishes requirements for cylinders (less than 1000 pounds), DOT portable tanks and DOT containers. WTP does not plan to receive anhydrous ammonia by container or cylinder. Therefore, Section 10 of this standard will not be implemented for this project

Pages 32-34; Section 11 Systems mounted on farm wagons (implements of husbandry) for the transportation of ammonia

Revise Section 11 as follows:

Not Applicable

Justification: This section establishes requirements for equipment mounted on farm wagons for the transportation of ammonia. WTP does not plan to use farm wagons for the transportation of ammonia Therefore, Section 11 of this standard will not be implemented for this project.

Pages 34-35; Section 12 Systems mounted on farm wagons (implements of husbandry) for the application of ammonia

Revise Section 12 as follows:

Not Applicable

Justification: This section establishes requirements for equipment mounted on farm wagons for the application of ammonia. WTP does not plan to use farm wagons for the application of ammonia. Therefore, Section 12 of this standard will not be implemented for this project.

Pages 35-37; Section 13 References

The references listed shall be constrained to the approved versions listed in the SRD or approved changes and equivalencies.

The following references shall be excluded:

ANSI/ASHRAE 15, American National Standard Safety Code for Mechanical Refrigeration

ANSI/IIAR 2, American National Standard for Equipment, Design and Installation of Ammonia Mechanical Refrigeration Systems

ANSI/ASME B31.5, American National Standard for Refrigeration Piping

ANSI/SAE J1513, Refrigeration Tube Fittings

API Standard 620, Design and Construction of Large Welded Low-Pressure Storage Tanks

Justification: The above references are for the design of refrigerated storage systems. WTP does not plan to use a refrigerated anhydrous ammonia storage system. Therefore, these references will not be implemented for this project.

The following references shall be excluded:

40 CFR Part 280, Technical standards and corrective action requirements for owners and operators of underground storage tanks (UST)

Justification: The above reference is for underground storage tanks. WTP does not plan to use underground storage tanks for anhydrous ammonia. Therefore, these references will not be implemented for this project.

The following references shall be excluded:

CGA G-7, Guide to the Preparation of Precautionary Labeling and Marking of Compressed Gas Containers

ANSI/CGA V-1, American National Standard Compressed Gas Association Standard for Compressed Gas Cylinder Valve Outlet and Inlet Connections

Justification: The above references are for the use of cylinders and small (less than 1 ton) containers. WTP does not plan to use cylinders or small containers for anhydrous ammonia storage. Therefore, these references will not be implemented for this project.

The following references shall be excluded:

ANSI/ASAE S276, Slow Moving Vehicle Identification Emblem
ANSI/ASAE S338.2, Safety Chain for Towed Equipment

Justification: The above references are for the use of ammonia systems mounted on farm equipment. WTP does not plan to use farm equipment for anhydrous ammonia storage. Therefore, these references will not be implemented for this project.

26.0 ASME B31.3-1996, Process Piping

Revision: 1996
Sponsoring Organization: ASME

WTP Specific Tailoring

The following tailoring of ASME B31.3, *Process Piping*, is required for use by the WTP contractor as an Implementing Standard for: (1) the fabrication and installation of those portions of the C5V ductwork that are being embedded in concrete, (2) the use of ASME B16.9 welding tees in accordance with ASME B31.3-2002, (3) use of vacuum box leak testing, and (4) the ASME B31.3-1998, paragraph 345.2.3(c), allowance for not leak testing closure welds outside of inaccessible areas.

- The tailored sections of ASME B31.3 applicable to embedded ductwork will only be utilized to the extent that it will cover the fabrication, installation, and inspection (and associated testing) of Category D fluid service piping being used as C5 ductwork. Air testing requirements for this ductwork will be compliant with ASME AG-1. Below is a description of those portions of ASME B31.3 that apply to fabrication, installation, and inspection of Category D fluid service piping and the sections of the SRD that they will apply to.
- The tailored sections of ASME B31.3 applicable to welding tees will only be used for ASME B16.9 welding tees. As long as the stress intensification factors from ASME B31.3-2002 are used in the stress analysis for the welding tees, welding tees fabricated to either the 1996 or the 2002 edition of ASME B31.3 can be used. Below is a description of those portions of ASME B31.3, Appendix D, Table D300, that apply to welding tees and the section of the SRD to which they will apply.
- The tailored paragraphs of ASME B31.3 applicable to vacuum box leak testing, in lieu of hydrostatic or pneumatic leak testing, will only be used to leak test full penetration circumferential piping field butt welds inside an inaccessible area (as defined in Appendix H, Section 6.0) out to the first isolation component outside the inaccessible area. Further, if the 100 % volumetric inspection using ultrasonic examination per ASME B31.3 paragraph 344.6, is conducted for welds to be vacuum box tested, then the ultrasonic examination shall be conducted using a method that creates and maintains a reproducible computerized image(s) of the entire weld in the axial and radial direction.
- The tailored paragraphs of ASME B31.3 adopting the provisions of ASME B31.3 (c) - 1998 Addendum paragraph 345.2.3(c) are applicable to all ASME B31.3 piping in all facilities except for closure welds in inaccessible areas.

Piping providing a confinement function in accordance with SRD 4.4-3 will comply with the following sections of ASME B31.3-1996, *Process Piping*. These sections of ASME B31.3 are applicable for embedded ductwork.

Chapter 3, Materials

Chapter 5, Fabrication

Table 341.3.2, Visual acceptance criteria for Category D fluid service piping

Justification: Due to wall thickness requirements of duct embedded in concrete, piping materials are required. ASME B31.3 will apply to materials, fabrication, and inspection standards as appropriate. Testing requirements for nuclear air treatment systems will be consistent with ASME AG-1.

Piping providing a confinement function in accordance with SRD 5.1-2 will comply with the following sections of ASME B31.3-1996, *Process Piping*. These sections of ASME B31.3 are applicable for embedded ductwork.

Chapter 3, Materials

Chapter 5, Fabrication

Table 341.3.2, Visual acceptance criteria for Category D fluid service piping

Justification: Due to wall thickness requirements of duct embedded in concrete, piping materials are required. ASME B31.3 will apply to materials, fabrication, and inspection standards as appropriate. Testing requirements for nuclear air treatment systems will be consistent with ASME AG-1.

Piping providing a confinement function in accordance with SRD 4.2-2 will comply with ASME B31.3-1996, *Process Piping*, with the following modification:

In Table D300, the description of welding tee per ASME B16.9 shall be revised so it is consistent with that shown in Table D300 of ASME B31.3-2002:

Description	Flexibility Factor k	Stress Intensification Factor [Notes (2), (3)] Out-of-Plane, i_o	In-Plane i_i	Flexibility Characteristic, h	Sketch
Welded tee per ASME B16.9 [Notes (2), (4), (6), (11), (13)]	1	$\frac{0.9}{h^{2/3}}$	$3/4\ i_o + 1/4$	$3.1\frac{\overline{T}}{r_2}$	Same as ASME B31.3-1996

This means that for welding tees per ASME B16.9, note 11 in Table D300 is also changed to:

(11) If $r_2 \geq 1/8D_2$ and $T_c \geq 1.5\overline{T}$, a flexibility characteristic of $4.4\,\overline{T}/r_2$ may be used.

Justification: The use of a lower flexibility characteristic for welding tees per ASME B.16.9 in accordance with ASME B31.3-2002 will increase both the out-of-plane and in-plane stress intensification factors. The increased stress intensification factors will reduce the allowable out-of-plane and in-plane moments that can be applied to the welding tee and keep the calculated stress below the stresses allowable by ASME B31.3-1996.

Safety piping within the scope of SRD 4.2-2 shall comply with ASME B31.3-1996, Chapter V, Paragraph 345, using the following approach for vacuum box leak testing. Vacuum box leak testing, in lieu of hydrostatic or pneumatic leak testing, may be used to leak test full penetration circumferential piping, field butt welds inside an inaccessible area (as defined in Appendix H, Section 6.0) out to the first isolation component outside the inaccessible area, only under the following conditions:

Vacuum Box Leak Test Method - The vacuum box leak test shall be in accordance with a Bubble Test - Vacuum Box Technique method specified in ASME BPV Code, Section V, Article 10, Appendix II, subject to the requirements listed below:

(a) Sensitivity of the test shall be demonstrated to be not less than 1E-3 atm-ml/sec at 15 psig.

(b) The test pressure shall be a partial vacuum of at least 7 psi below atmosphere, applied to the outside of the weld.

(c) The required partial vacuum shall be maintained for at least 20 sec examination time.

In addition, the following limitations and restrictions shall apply to the application of vacuum box leak testing in lieu of a hydrostatic or a pneumatic leak test:

- Vacuum box leak testing will only be used to leak test circumferential piping field welds inside an inaccessible area (as defined in Appendix H, Section 6.0). This includes any welds in extensions of piping systems contained or originating in accessible areas between the inaccessible area boundary and the first isolation valve or device beyond the inaccessible area boundary;
- It shall only be used for piping field welds where required to avoid damage to components, ensure the safety to construction workers, perform leak tests of field welds where physical limitations prevent hydrostatic or pneumatic leak testing as prescribed in ASME B31.3-1996 paragraph 345.4 and paragraph 345.5 respectively;
- Pipe welds that are to be vacuum box leak tested will be assessed for suitability. The number of welds to be vacuum box leak tested shall be limited to a maximum of three welds between termination points (two termination or closure welds and one intermediate weld) on a given pipe system except where physical limitations prevent examination by hydrostatic or pneumatic leak testing. DOE will be informed of such exceptions, and may at its discretion and within 48 hours of being informed, respond to BNI on the suitability of the use of vacuum box leak testing for such instances. Termination points may be tanks, vessels, valves, etc. (Specifically excluded from the definition of termination points are junctions where the piping changes design class). This could be either the last two closure welds in an inaccessible area or the last closure weld in the inaccessible area and the last closure weld outside the

inaccessible area. In addition, vacuum box leak testing would be permitted for the connection welds between construction modules if this is limited to one module-to-module weld per piping run within the cells. This is in addition to termination welds on the piping run. A module is defined as a pre-leak-tested subassembly containing multiple pipe spools;

- Vacuum box leak testing shall be limited to full penetration girth butt welds, on straight pipe or between straight pipe and pipe components of the same nominal pipe size and same wall thickness on both sides of the weld at the weld location. The following configurations are candidates for vacuum box testing:
  - (a) Straight pipe to straight pipe connection butt welds
  - (b) Straight pipe to 90° elbow connection butt welds
  - (c) Straight pipe to 45° elbow connection butt welds
  - (d) Straight pipe to concentric reducer connection butt welds
  - (e) Straight pipe to eccentric reducer connection butt welds
  - (f) Straight pipe to butt welding tee connection butt welds
  - (g) Straight pipe to butt welding reduced outlet tee connection butt welds
  - (h) Straight pipe to valve nozzle connection butt welds
  - (i) Straight pipe to tank or vessel nozzle connection welds
  - (j) Straight pipe to safe-end of a weldolet connection butt welds - full penetration butt welded connection only
  - (k) Straight pipe to pipe cap connection butt welds

  Prior to the application of vacuum box testing using any of the candidate configurations on piping butt welds at the WTP, the Contractor must successfully demonstrate to the DOE, for the candidate configuration, that (1) all portions of the weld to be inspected are visible and can be inspected in accordance with the ASME Boiler and Pressure and Vessel Code, Section V, Article 10, Appendix II - 1995; (2) the vacuum box can adequately maintain a partial vacuum of 7 psid; and (3) vacuum box leak testing can be accomplished in the time limits and other requirements established by this procedure. The DOE shall be advised at least 7 days in advance of any demonstration to qualify a new weld configuration so that they can witness the demonstration. The Contractor shall document any demonstration relied upon to justify the use of vacuum box leak testing on a new configuration. Further, vacuum box leak testing shall be conducted with a vacuum box that completely encapsulates the weld, at the test location;
- All welds shall be 100 % volumetrically inspected in accordance with ASME B31.3-1996, paragraphs 344.5 or 344.6. If the 100 % volumetric inspection is conducted using ultrasonic examination per ASME B31.3-1996 paragraph 344.6, then the ultrasonic examination shall be conducted using a method that creates and maintains a reproducible computerized image(s) of the entire weld in the axial and radial direction;
- It shall be limited to welds made using the Orbital welding machines. The only exception is that vacuum leak box testing may be used on manual welds if the 100 % volumetric inspection was conducted by radiography per ASME B31.3-1996 paragraph 344.5;
- The piping systems and or components on both sides of the weld to be vacuum box leak tested shall have been subjected to a hydrostatic leak test in accordance with ASME B31.3-1996

paragraph 345.4, a pneumatic test in accordance with ASME B31.3-1996 paragraph 345.5, a combination pneumatic-hydrostatic leak test in accordance with ASME B31.3-1996 paragraph 345.6, or in the case of components, leak tested in accordance with the Code or Standard applicable to the design of the component;

- At a minimum, a flexibility analysis in accordance with ASME B31.3-1996 paragraphs 319.4.2 (a) and (b) shall be required on any piping systems that contain welds that are to be vacuum leak box tested. In addition, a comprehensive flexibility analysis in accordance with ASME B31.3-1996 paragraphs 319.4.2 (c) and (d) shall be performed on any piping systems that contain welds that are to be vacuum box leak tested when the piping systems have a design temperature greater than or equal to 150 °F;
- For manual welds, the requirements of ASME B31.3-1996 paragraph 344.7.1 (a) through (g) shall be invoked on any weld to be vacuum box leak tested with the exception that the requirement of subparagraph 344.7.1 (e) "... aided by liquid penetrant or magnetic particle examination when specified in the engineering design" shall not be required. For welds made using Orbital welding machines, the requirements of ASME B31.3-1996 paragraph 344.7.1 (a), (b), (c), (d), and (g) shall be invoked. The requirements of 344.7.1 (e) and (f) shall not be required. The implementation of these requirements shall be documented in the weld inspection report;
- Pipe welds and the associated line numbers that are to be vacuum leak box tested shall be identified in advance of the testing. This identification shall be documented in the controlled document Weld List, which must include this information prior to the initiation of any vacuum box leak testing associated with those welds and line numbers. It is understood that the controlled document Weld List may need to be revised and updated periodically through the construction phase of the WTP Project; and
- The following special requirements shall be placed on the training programs used to certify the technicians that will be conducting the vacuum box leak tests:
  1. The BNI Construction Manager shall pre-approve the technician qualifying examination(s) for vacuum box leak testing;
  2. The BNI Construction Manager shall pre-approve the qualifications of each Level III technician preparing or giving the examinations for vacuum box leak testing;
  3. DOE ORP at their discretion shall reserve the right to observe any and/or all practical leak test examinations and review of the results of any and/or all written vacuum box leak test examinations;
  4. The minimum topical content of each Level II examination shall be specified by BNI, and approved by DOE;
  5. The 80 % correct criteria for passing the examination shall apply to each part of the three part examinations that are to be given;
  6. BNI shall provide reasonable assurance that they will take adequate measures to assure the integrity of written examination is maintained; and
  7. There shall be several versions of each examination in use to assure Level II knowledge and ability concerning vacuum box leak testing is confirmed.

Justification: The requirement for the vacuum box leak test sensitivity is consistent with the ASME B31.3 requirement for a sensitive leak test as given in ASME B31.3-1996 paragraph 345.8 and for at least 7 psi vacuum and an examination time of at least 20 seconds. The limitations in using vacuum box leak testing better define when this method can be used. DOE ORP may further change the definition and application of these special vacuum box leak testing criteria based on the Contractor's experience with their use, or the Contractor's request for a change.

Piping system closure welds outside of inaccessible areas (as defined in SRD Appendix H, Section 6.0) shall comply with the requirements of ASME B31.3-1998, subparagraph 345.2.3(c). When ASME B31.3-1998, subparagraph 345.2.3(c) is invoked the following restrictions shall apply:

- It shall not be invoked on any closure welds on piping systems in inaccessible areas as defined in Section 6.0 of Appendix H of the SRD. This includes any welds in extensions of piping systems contained or originating in inaccessible areas, between the inaccessible area boundary and the first isolation valve, or device beyond the inaccessible area boundary;
- It shall only be invoked on full penetration butt welds in straight pipe, full penetration butt welds at the safe-end of an equipment nozzle, or full penetration butt welds at the safe-end of branch connections. [The safe-end is defined as the piping to equipment nozzle connecting weld or the branch connection to branch piping connecting welds.];
- The requirements of ASME B31.3(c) - 1998, subparagraph 345.2.3 (c) shall be met;
- The piping systems and or components on both sides of the closure weld shall have been subjected to a hydrostatic leak test in accordance with ASME B31.3-1996 paragraph 345.4, a pneumatic leak test in accordance with ASME B31.3-1996 paragraph 345.5, a combination pneumatic-hydrostatic leak test in accordance with ASME B31.3-1996 paragraph 345.6, or in the case of components leak tested in accordance with the Code or Standard applicable to the design of the component;
- For manual welds, the requirements of ASME B31.3-1996 paragraph 344.7.1 (a) through (g) shall be invoked with the exception that the requirement of subparagraph 344.7.1 (e) "...aided by liquid penetrant or magnetic particle examination when specified in the engineering design" shall not be required. For welds made using the Orbital welding machines, the requirements of ASME B31.3 -1996 paragraph 344.7.1 (a), (b), (c), (d), and (g) shall be invoked. The implementation of these requirements shall be documented in the weld inspection report;
- Piping welds and the associated line numbers for which the closure weld classification is invoked shall be documented in a controlled document Weld List;
- Piping components may include mechanical elements other than piping; and
- In addition, BNI shall incorporate these requirements into the appropriate specification. DOE-ORP may further change the definition and application on the use of closure welds based on the Contractor's experience with their use or the Contractor's request for a change.

Justification: This change does not change the safety function of any pressure boundary components. The requirement to leak test pressure boundary field welds is primarily to ensure the reliability of the welds in addition to the reliability provided by the other required examinations. The exception allowed by ASME B31.3-1998, paragraph 345.2.3 that the final weld connecting piping systems or components which have been successfully tested in accordance with

paragraph 345 need not be leak tested provided the weld is examined in-process in accordance with paragraph 344.7 (a), (b), (c), (d), and (g) and passes with 100 % radiographic examination in accordance with paragraph 344.5 or 100 % ultrasonic examination in accordance with paragraph 344.6 provides adequate assurance that the weld is reliable and leak tight. The change continues to provide adequate safety since it requires that all piping closure welds that are not leak tested are in-process examined and 100 % volumetrically examined which exceeds the requirements of ASME B31.3-1996 for closure welds that are leak tested. The inability to hydrostatically or pneumatically leak test these closure welds does not affect the soundness of the welds.

24590-WTP-SRD-ESH-01-001-02, Rev. 5, page C.9-1, tailoring of AISC M016

Appendix C: Implementing Standards

9.0 AISC M016, Manual of Steel Construction, Allowable Stress Design (ASD)

Revision: 9th Edition
Sponsoring Organization: American Institute of Steel Construction

WTP Specific Tailoring

The following tailoring of M016 is required for use by the WTP contractor as an implementing standard for design of structural steel for Seismic Category III SSCs.

No specific section

Load combinations for design of structural steel members utilize those identified in UBC 97, Section 1612.3.

Justification: These load combinations represent the commercial requirements for allowable stress design of structural steel. Use of these load combinations will ensure compliance with the commercial design in accordance with the UBC.

No specific section

Seismic detailing requirements shall be in accordance with UBC 97, Chapter 22, Division V, Section 2214, for moderate seismic risk structures.

Justification: The requirements contained in this section contain accepted industry practice for design of important commercial steel structures. Use of this section will ensure compliance with the commercial design in accordance with the UBC.

HLW SKID INTERFACE CONNECTIONS

SERVICE	NOZZLE NUMBER	SIZE	INTERFACE
HLW-MELTER 1 & 2			
AMMONIA GAS IN	NO 1	1"	FLG SW, A182-F304, 304L, CL300, SCH40S, RF
INST AIR IN	NO 2	2"	FLG WN, A105, CL150, STD WT, RF
PROCESS GAS IN	NO 1	14"	FLG WN, A182-F316/316L, CL150, .375", RF
PROCESS GAS OUT	NO 2	16"	FLG WN, A182-F316/316L, CL150, .375", RF
AMMONIA/AIR OUT	NO 3	6"	FLG WN, A182-F304/304L, CL300, SCH40S, RF
AMMONIA/AIR IN	NO 3	6"	FLG WN, A182-F304/304L, CL300, SCH40S, RF

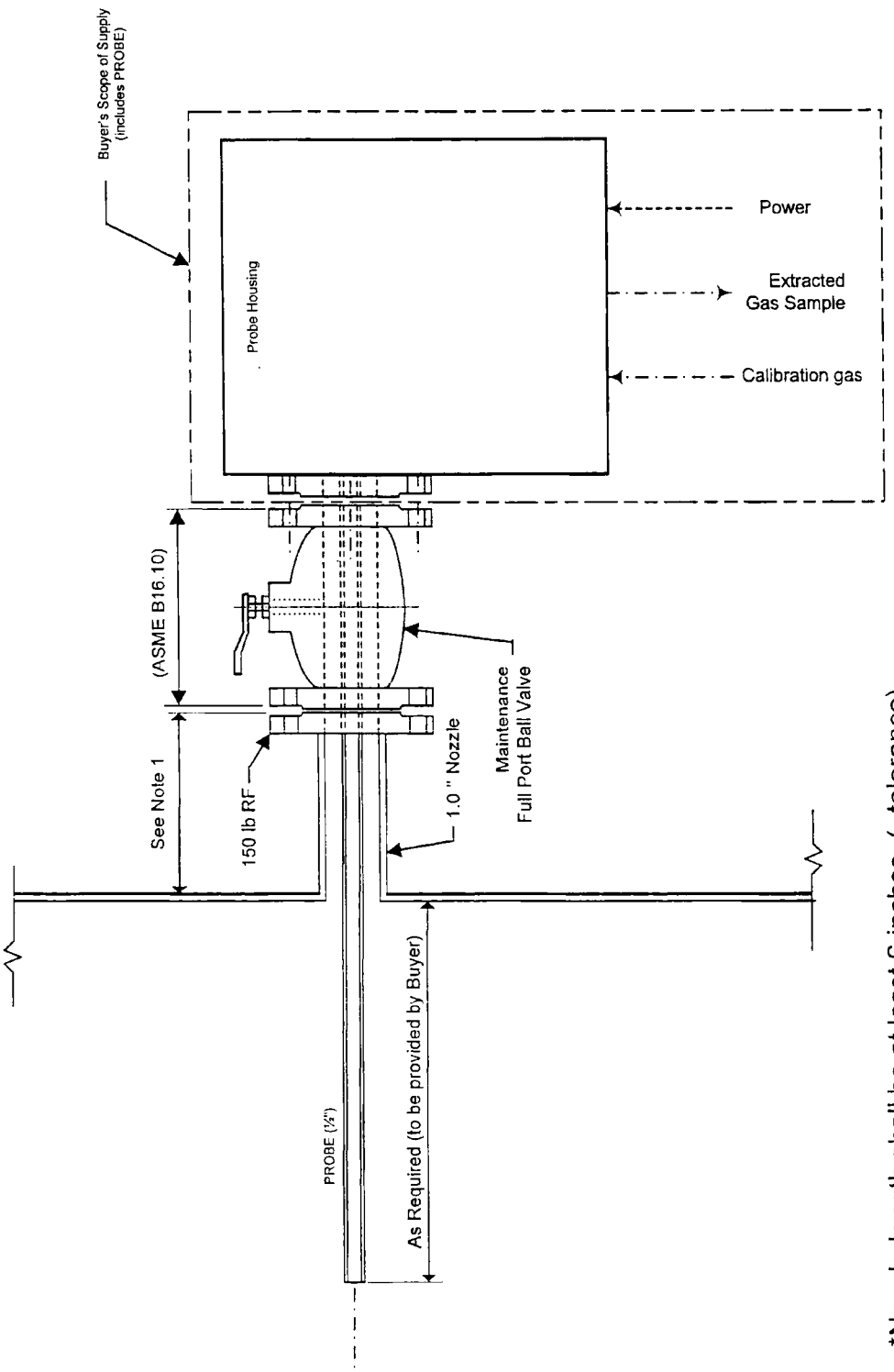

Scale: None

Connection for Non-Routine Sample Extraction

Secondary Offgas Flange Connection
for Gas Monitor Probe
with Ball Valve for Maintenance

Gas Extraction Connection

Note 1: *Nozzle length shall be at least 6 inches (- tolerance).
*There shall be at least 3 inches (- tolerance) of clearance, for tightening bolts, between the surface of the insulation jacketing and the underside of the flange.

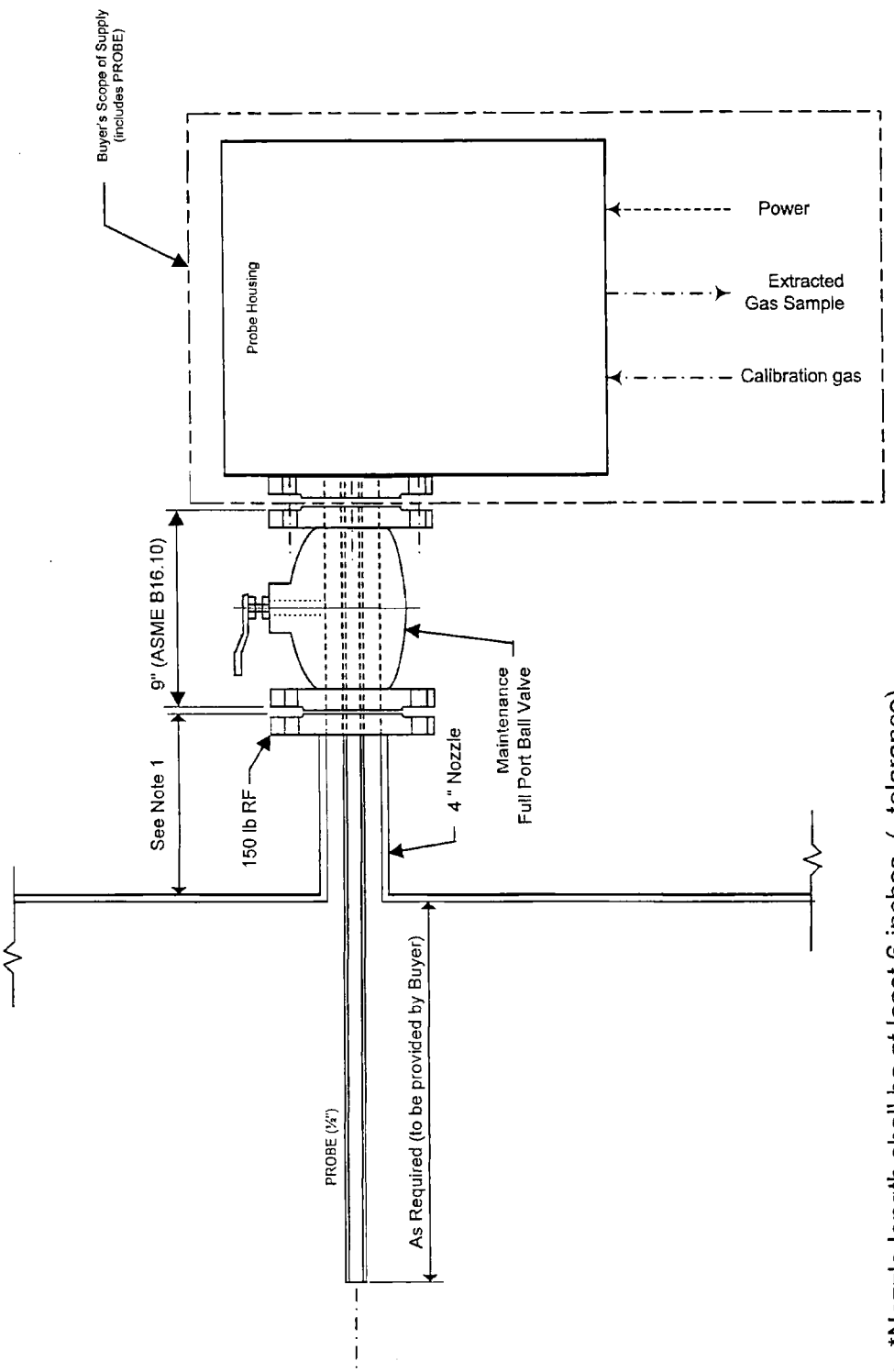

Scale: None

Connection for Sample Extraction-Permanent Typical

Secondary Offgas Flange Connection for Gas Monitor Probe with Ball Valve for Maintenance

Gas Extraction Connection

Note 1: *Nozzle length shall be at least 6 inches (- tolerance).
*There shall be at least 3 inches (- tolerance) of clearance, for tightening bolts, between the surface of the insulation jacketing and the underside of the flange.

Attachment 7

Certificate of Analysis for BASF Catalysts, LLC (VOCat 300S)

Seller's use of the COA is described in Section 10.2.6.3.

24590-HLW-3PS-MBTV-T0002, Rev. 1
Attachment 7
Page 2 of 2

Form #0697
Rev. 1

BASF
The Chemical Company

BASF
ENVIRONMENTAL CATALYST GROUP
9800 KELLNER ROAD
HUNTSVILLE, ALABAMA 35824
Main Phone # (256) 772-9373

CERTIFICATE OF ANALYSIS

LOT CONTROL NO: 3642401500 HSV PART NO: 166204-001 Customer Part Numt N/A

PART SIZE: 5.91 X 5.91 X 3 CPSI: A200 Customer P/O Numt **CUA-0000016866**

THIS IS TO CERTIFY THAT CATALYSTS DELIVERED MEET REQUIREMENTS OF:

CATALYST DRAWING: **PS - 1118** REV. 3 SPECIFICATION: **PS - 057** REV. 8

FINAL INSPECTION PROC. **SOP - 0231** REV. 8

PRECIOUS METAL CONCENTRATION (SAMPLE OF ALL) IN g/ft3

TOTAL PM CONCENTRATION	SPEC	SAMPLE
MAX. AVERAGE	NR	
MIN. AVERAGE	32.51	35.53
MIN AVERAGE TPM	NR	NR
MIN INDIVIDUAL TPM	28.31	33.88

DRY GAIN	SPEC	SAMPLE
MAX. AVERAGE	2.15	
MIN. AVERAGE	1.29	1.72

DIMENSIONAL (AS PER AQL) IN INCHES

WASHCOAT ADHESION (% LOSS)

SAMPLE OF 1	SPEC	SAMPLE
MAX. INDIVIDUAL	2.0	1.0

BET SURFACE AREA IN mm2/cc

SAMPLE OF 1	SPEC	SAMPLE
MIN. INDIVIDUAL	4.0	11.9

MIN. FLOW (AFCM)

	SPEC	SAMPLE
MIN. INDIVIDUAL	TBD	381

CATALYTIC ACTIVITY IN DEG F

SAMPLE OF 1	SPEC	SAMPLE
MAX HEXANE T 20	289	200.0
MAX HEXANE t 50	387	347.0
MIN HEXANE CONV. @ 450c	92	98.0

VISUAL (AT 1.5 AQL): ALL REQUIREMENTS FOR FLATNESS, CHIPS, WORKMANSHIP, GOUGES, CRACKS, WEB DEFECTS, AND PASSAGE DEFECTS HAVE BEEN MET OR EXCEEDED AS DEFINED ON THE APPROPRIATE DRAWING.

COMMENTS:

PROCESS QUALITY REPRESENTATIVE 6-1-09 DATE

WI-0132

Quarter Ending 09/30/2011 24590-HLW-PCN-ENV-10-007

Hanford Facility RCRA Permit Modification Notification Form
Part III, Operating Unit 10
Waste Treatment and Immobilization Plant

Index

Page 2 of 4: Hanford Facility RCRA Permit, Part III, Operating Unit 10, Waste Treatment and Immobilization Plant
Update Engineering Specification and Mechanical Data Sheets for HOP Booster Fans (HOP-FAN-00001A/B/C and HOP-FAN-00009A/B/C) and HOP Stack Extraction Fans (HOP-FAN-00008A/B/C and HOP-FAN-00010A/B/C) in Appendices 10.6 and 7.7 of the Dangerous Waste Permit (DWP).

Submitted by Co-Operator:

Donna Busche 6/14/11

D. M. Busche Date

Reviewed by ORP Program Office:

7/6/11

D. L. Noyes Date

Quarter Ending 09/30/2011 24590-HLW-PCN-ENV-10-007

Hanford Facility RCRA Permit Modification Notification Form	
Unit: **Waste Treatment and Immobilization Plant**	Permit Part: **Part III, Operating Unit 10**

Description of Modification:

The purpose of this Class 1 prime modification is to update the specification and mechanical data sheets for the HLW HOP System Booster Fans (HOP-FAN-00001A/B/C and HOP-FAN-00009A/B/C) and Stack Extraction Fans (HOP-FAN-00008A/B/C and HOP-FAN-00010A/B/C). The permit documents are being replaced with source documents, as indicated in the table below.

Appendix 7.7			
Replace:	24590-WTP-3PS-MACS-TP004, Rev. 0	With:	24590-WTP-3PS-MACS-T0004, Rev. 6
			24590-WTP-3PS-MACS-T0005, Rev. 0
Appendix 10.6			
Replace:	24590-HLW-MAD-HOP-P0018, Rev. 2	With:	24590-HLW-MAD-HOP-00018, Rev. 9
	24590-HLW-MAD-HOP-P0038, Rev. 0		24590-HLW-MAD-HOP-00038, Rev. 5

Note that 24590-WTP-3PS-MACS-TP004 (single and multi-stage high integrity centrifugal blowers) is being replaced with two source specifications. 24590-WTP-3PS-MACS-T0004 addresses single stage high integrity centrifugal fans and blowers, and 24590-WTP-3PS-MACS-T0005 addresses multi-stage high integrity centrifugal blowers.

This modification requests Ecology approval and incorporation into the permit, the changes provided in applicable document change forms (e.g., SCNs and DCNs) and changes associated with the resolution to comments on change documents since issuance of the last revision of the permitted documents. Revisions are the result of ongoing design changes.

Significant changes to specification 24590-WTP-3PS-MACS-T0004, *Engineering Specification for Single Stage High Integrity Centrifugal Fans and Blowers (AG-1)*, are summarized below:

- Major revision that included changes to the following sections: Applicable Documents, Design Requirements, Materials, Fabrication, Tests and Inspections, Preparation for Shipment, Quality Assurance, and Documentation Submittals
- Removed requirements for Multi-Stage Blowers (now addressed in 24590-WTP-3PS-MACS-T0005, *Engineering Specification for High Integrity Centrifugal Blowers - Multi-Stage*), to remove ASME AG-1 requirements
- Revised Industry Standards Section to include standards for machinery protection, structural carbon steel, equipment grounding, flame testing of cables, acoustics, and electrical equipment enclosures
- Modified Q and Safety Class definitions, quality assurance requirements, electrical requirements, vibration criteria, and vendor submittal requirements
- Added requirement for AG-1 compliance matrix
- Modified requirements for Resistance Temperature Devices (RTD)
- Specified standards for vendor performance testing of single stage blowers
- Added Attachment A, Tailored version of specification 24590-WTP-3PS-AFPS-T0001, *Shop Applied Special Protective Coatings for Steel Items and Equipment*

Significant changes to data sheet 24590-HLW-MAD-HOP-00018, *Centrifugal Multi-Stage Blower*, for HOP Booster Fans HOP-FAN-00001A/B/C and HOP-FAN-00009A/B/C, are summarized below:

- Incorporated specification 24590-WTP-3PS-MACS-T0005, *Engineering Specification for High Integrity Centrifugal Blowers - Multi-Stage*, to remove ASME AG-1 requirements
- Revised Safety Class

- Revised Maximum Indoor Design Temperature
- Revised Inlet Air Temperature at Design Conditions
- Revised Design Static Pressure
- Revised AMCA Drive Arrangement
- Revised and clarified materials for housing (cast iron), shaft (stainless steel), blower wheel (stainless steel), mounting frame (carbon steel), and inlet box/transition piece (cast iron)
- Specified seal type as double carbon ring with purge
- Added insulation requirement
- Added gas composition and acid dew point
- Removed reference to cancelled calculation 24590-HLW-MAC-HOP-00001
- Updated design inlet conditions, capacity, and external static pressure to align with 24590-HLW-M4C-HOP-00011
- Added Equipment Qualification Datasheet and Attachment 1, *Electrical Data Sheet Low Voltage Induction Motor*
- Added and revised data fields for clarity
- Added, revised and deleted notes

Significant changes to data sheet 24590-HLW-MAD-HOP-00038, *Centrifugal Multi-Stage Blower*, for HOP Stack Extraction Fans HOP-FAN-00008A/B/C and HOP-FAN-00010A/B/C, are summarized below:

- Incorporated specification 24590-WTP-3PS-MACS-T0005, *Engineering Specification for High Integrity Centrifugal Blowers - Multi-Stage*, to remove ASME AG-1 requirements
- Revised Safety Class
- Revised design blower capacity
- Revised Inlet Air Temperature at Design Conditions
- Revised AMCA Drive Arrangement
- Revised materials for housing (cast iron), shaft (stainless steel), blower wheel (stainless steel), mounting frame (carbon steel), and inlet box/transition piece (cast iron)
- Specified field type as double carbon ring with purge
- Removed reference to cancelled calculation 24590-HLW-MAC-HOP-00001
- Updated design inlet conditions, capacity, and external static pressure to align with 24590-HLW-M4C-HOP-00011
- Added gas composition
- Added Equipment Qualification Datasheet and Attachment 1, *Electrical Data Sheet Low Voltage Induction Motor*
- Added and revised data fields for clarity
- Added, revised and deleted notes

The following is a list of outstanding change documents that have not been incorporated into this modification:

- 24590-QL-MRA-MACS-00005-T0001
- 24590-QL-MRA-MACS-00005-T0002
- 24590-QL-MRA-MACS-00004-T0001

Quarter Ending 09/30/2011 24590-HLW-PCN-ENV-10-007

WAC 173-303-830 Modification Class:	Class 1	Class [1]1	Class 2	Class 3
Please mark the Modification Class:		X		

Enter relevant WAC 173-303-830, Appendix I Modification citation number: NA

Enter wording of WAC 173-303-830, Appendix I Modification citation:

In accordance with WAC 173-303-830(4)(d)(ii), this modification notification is requested to be reviewed and approved as a Class [1]1 modification. WAC 173-303-830(4)(d)(ii)(A) states, "Class 1 modifications apply to minor changes that keep the permit current with routine changes to the facility or its operation. These changes do not substantially alter the permit conditions or reduce the capacity of the facility to protect human health or the environment. In the case of Class 1 modifications, the director may require prior approval."

Modification Approved/Concur: [X] Yes [ ] Denied (state reason below)

Reason for denial:

Reviewed by Ecology:

for

J. J. Wallace 9-9-11

Date

ISSUED BY
RPP-WTP PDC

R11223092

RIVER PROTECTION PROJECT – WASTE TREATMENT PLANT

ENGINEERING SPECIFICATION

FOR

Single Stage High Integrity Centrifugal Fans and Blowers (AG-1)

Please note that source, special nuclear, and byproduct materials, as defined in the Atomic Energy Act of 1954 (AEA) are regulated at the U. S. Department of Energy (DOE) facilities exclusively by DOE acting pursuant to its AEA authority. DOE asserts that pursuant to AEA, it has sole and exclusive responsibility and authority to regulate source, special nuclear, and byproduct materials at DOE-owned nuclear facilities. Information contained herein on radionuclides is provided for process description purposes only.

Content applicable to ALARA? ☐ Yes ☒ No

ADR No. Rev

Specification changes retroactive? ☐ Yes ☒ No
☐ N/A (alpha revision or revision 0)

Quality Level
Q
DOE Contract No. DE-AC27-01RV14136

		M. Summers	J. Williamson	G. Dunn	J. Hinckley	Gerard Garcia
6	6/2/10	M. Summers	J. Williamson	G. Dunn	J. Hinckley	G. Garcia
5	1/27/09	S. Anderson	John Dick	Gerard Garcia	Chris Meng	Janet Roth
4	2/13/08	S. Anderson	John Dick	Gerard Garcia	Merl Rosenthal	Robert Voke
3	2/1/07	K. Yu	J. Dick	E.Diaz	D Lord	Robert Voke
2	11/17/05	A. Saguisag	W. Lawrence	G. Garcia	N/A	Robert Voke
1	7/22/04	A. Saguisag	G. Gaulden	Dennis Klein for G. Garcia	N/A	Dennis Klein for Garth Duncan
0	1/26/04	A. Saguisag	G. Garcia	Jan Sanders	N/A	Jan Sanders for Garth Duncan
REV	DATE	BY	CHECK	REVIEW	E&NS	DPEM/EM

SPECIFICATION No.	Rev
24590-WTP-3PS-MACS-T0004	6

Revision History

Revision	Reason for Revision
0	Issued for Purchase
1	Added information for multi-stage blowers including Ellis & Watts' input and definitions of abbreviations in spec, incorporated SCNs 24590-WTP-3PN-MACS-00008, 00009 & 00010,made editorial changes, clarified coating requirements and re-issued for purchase.
2	Incorporated SCNs 24590-WTP-3PN-MACS-00016, adding additional acceptable exceptions/clarifications from Supplier, and 24590-WTP-3PN-MACS-00018, allowing use of ASME PTC-10-1997 test procedure for performance testing of multi-stage blowers. Clarified required number of wire for dual element RTD. Changed Par. 3.9.4 to remove requirement to mount signal conditioner to ASD cabinet & specified preferred Foundation Fieldbus converters. Changed Par. 8.1 to clarify QA program requirements. Incorporated editorial comments and re-issued for purchase. Added issue dates for referenced codes and standards as noted in parent codes or standards listed in SRD. Where Engineering Equivalency Evaluation has been done, dates of latest equivalent editions have been added instead of dates shown in parent codes or standards. Deleted AMCA 99 - Standards Handbook.
3	Incorporate 24590-WTP-SDDR-HV-06-00007. Deleted ASDs from scope. Modified Q & Safety Class definitions, electrical requirements, RTD requirements, vibration criteria, & submittal requirements. Added industry standards and Appendicies B & C. All revisions are retroactive.
4	Removed Appendices B & C - Industry standards applicable on a system level, not at the level of the components. Added Industry Standards ISO 3744-1995 & ISO 1940-1:2003 relating to requirements for multi-stage blowers. Added requirements for deriving control power supplies form Buyer's supplied power.
5	Major Revision, No revision bars were used. Incorporated Specification Change Notices 24590-WTP-3PN-MACS-00028 & -00030. -Added definitions to Section 1.4 for Safety Class, Safety Significant. Changed definition of Q in Section 1.4 -Removed from Section 2.2 references to ASCE 4-98, AMCA 99-0401-1986, 2000, all references to UL standards due to misapplication. -Reorganized Sections 3 and 4 for clarity. Split requirements for single stage and multi-stage blowers for clarity. -Added clarifications to Section 6.5. -Added two sections to Section 6.6 specify standards for the performance testing of single and multi-stage blowers. -Added section to Section 10.2.1 requiring submittal of assembly drawings.
6	Supersedes 24590-WTP-3PS-MACS-T0001 Rev 6. Major Revision, no change bars used. Streamlined specifications 24590-WTP-3PS-AFPS-T0001, 24590-WTP-3PS-EKP0-T0001, and 24590-WTP-3PS-JQ07-T0001. Removed duplicate sources of information. Added requirement for AG-1 compliance matrix. Revised to remove Multi-Stage Blowers

Contents

1 Scope 1
1.1 Project Description and Location 1
1.2 Equipment, Material, and Services Required 1
1.3 Work by Others 1
1.4 Definitions 2
1.5 Abbreviations 2
1.6 Safety/Quality Classifications 3
2 Applicable Documents 3
2.1 Codes 3
2.2 Industry Standards 4
2.3 Reference Documents/Drawings 5
3 Design Requirements 5
3.1 General 5
3.2 Basic Function 6
3.3 Performance 6
3.4 Lifting and Handling Requirements 6
3.5 Sound Ratings 6
3.6 Environmental Qualification 7
3.7 Seismic Qualification 7
3.8 Mechanical Requirements 7
3.9 Electrical Requirements 10
3.10 Low Voltage Induction Motors 14
3.11 Instrumentation and Control Requirements 14
3.12 Accessibility and Maintenance 20
3.13 Accessories 21
4 Materials 21
4.1 Construction 21
4.2 Prohibited Materials 22
4.3 Special Requirements 22
5 Fabrication 22
5.1 Fabrication of Blowers 22
5.2 Welding 22
6 Tests and Inspections 23
6.1 General 23

6.2 Personnel Qualifications 23
6.3 Non-Destructive Examinations 23
6.4 Shop Tests 24
6.5 Site Tests 25
7 Preparation for Shipment 25
7.1 General 25
7.2 Cleanliness 25
7.3 Painting and Special Protective Coatings 25
7.4 Tagging 25
8 Quality Assurance 25
8.1 QA requirements specific to item(s) or service 25
8.2 Supplier Deviation 26
9 Configuration Management 26
10 Documentation and Submittals 26
10.1 General 26
10.2 Submittals 26

Attachment

Attachment A Tailored version of specification 24590-WTP-3PS-AFPS-T0001, Shop Applied Special Protective Coatings for Steel Items and Equipment A-1

Tables

Table 1. Instrument Supplier List 15
Table 2. Instrumentation Cable Schedule 18

1 Scope

1.1 Project Description and Location

The River Protection Project-Waste Treatment Plant (WTP) is a complex of waste treatment facilities where the Department of Energy's (DOE) Hanford site tank waste will be put into stable glass form. The WTP Contractor will design, build, and start up the WTP pretreatment and vitrification facilities for the US Department of Energy's (DOE) Office of River Protection (ORP). The waste treatment facilities will pretreat and immobilize the mixed waste (low-activity waste, LAW and high-level waste, HLW) currently stored in underground storage tanks at the Hanford Site.

The Hanford Site occupies an area of about 560 square miles and is located along the Columbia River, north of the city of Richland, Washington. The WTP Facility will be constructed at the East End of the 200 East Area of the Hanford Site. Benton, Franklin, and Grant counties surround the Hanford Site.

1.2 Equipment, Material, and Services Required

Design, furnish materials, fabricate, test, and package the Single Stage High Integrity Centrifugal Fans and Blowers (hereinafter called Blowers) and accessories in accordance with this specification including:

1.2.1 Blowers, each complete with electric motors, and accessories as specified here and in referenced technical specifications and data sheets attached to the Material Requisition (MR).

1.2.2 Special tools required for installation and maintenance, including accessories for lifting the motors and blowers.

1.2.3 Each blower/motor assembly shall include all components, accessories, and instruments fully assembled, wired, and skid mounted requiring only connection to the Buyer's electrical power, control systems, and ductwork.

1.2.4 Services of an erection and/or startup supervisor, if requested by Buyer.

1.2.5 Lifting eyes or lugs to facilitate lifting and handling of the fans. If spreader bars or special lifting devices are required, they shall also be furnished.

1.3 Work by Others

1.3.1 Material unloading and storage at jobsite

1.3.2 Installation labor

1.3.3 Foundation and anchor bolts

1.3.4 Ductwork external to the unit

1.3.5 Electric power supply

1.3.6 Wiring external to the blower motor and adjustable speed drive

1.3.7 Field Testing and Inspection

1.3.8 Integrated testing with Adjustable Speed Drive

1.4 Definitions

Quality Level	Identifies the quality requirements to be applied to WTP Project's Systems, Structures and Components (SSCs), and activities based on safety classification and SSC characteristic. Identified quality levels are Q, and Commercial Material (CM). Applicable ASME NQA-1 requirements are shown on the Supplier Quality Assurance Program Requirement data sheet attached to the MR.
Q	A quality level that includes Safety Class (SC), Safety Significant (SS) and Air Permit (AP) affecting SSCs.
Safety Class (SC)	An SSC whose preventive or mitigative function is necessary to limit radioactive material exposure to the public.
Safety Significant (SS)	An SSC whose preventive or mitigative function is a major contributor to defense-in-depth and/or worker safety.
Seismic Category	WTP Project's seismic classifications of SSC's based on their safety function. Seismic categories utilized in this specification are Seismic Category I (SC-I) and Seismic Category III (SC-III).
C3	A secondary containment zone.
C5	Plant areas and associated ventilation ductwork that is in direct contact with radioactive material and which prevents the spread of radioactive material to adjacent zones under both normal and abnormal operating conditions.

1.5 Abbreviations

ASHRAE	American Society of Heating, Refrigerating and Air Conditioning Engineers
ABMA	American Bearing Manufacturers Association
AMCA	Air Movement and Control Association, Inc.
ANSI	American National Standards Institute
ASNT	American Society for Nondestructive Testing
ASME	American Society of Mechanical Engineers
ASTM	ASTM International
AWS	American Welding Society
dBA	A-weighted decibel (unit of sound pressure level)
ISO	International Standards Organization

MR	Material Requisition
NEC	National Electric Code
NEMA	National Electrical Manufacturers Association
NFPA	National Fire Protection Association
NRTL	Nationally Recognized Testing Laboratory
OEM	Original Equipment Manufacturer
OSHA	Occupational Safety & Health Act
QA	Quality Assurance
RPP-WTP	River Protection Project-Waste Treatment Plant
RTD	Resistance Temperature Detector
SCFM	Standard Cubic Feet per Minute
SSC	Structure, System, or Component
SSPC	Society for Protective Coatings
UL	Underwriters Laboratories, Inc.

1.6 Safety/Quality Classifications

Safety Class, Quality Level, and Seismic Category of high integrity centrifugal fans described in this specification are noted in Fan Data Sheets attached to the MR. The Safety Functions of the high integrity centrifugal fans are listed in Appendix 2 of the data sheets.

2 Applicable Documents

The following documents form a part of this specification to the extent specified herein. In the event of conflict between the document referenced herein and the contents of this specification, Seller shall notify Buyer and obtain approval for its disposition.

Effective dates of codes and standards shall be as shown in ASME AG-1-1997 with ASME AG-1a Addenda 2000, unless noted otherwise. If effective dates of Codes and Standards to be used by Seller are different from those shown on ASME AG-1-1997 and its addenda, Seller shall provide justification for use of these versions.

References contained within brackets [ex: 24590-WTP-3PS-MACS-XXXXX] are for WTP internal use and not applicable to the seller.

2.1 Codes

2.1.1 ASME AG-1-1997 with ASME AG-1a Addenda 2000, Code on Nuclear Air and Gas Treatment

2.1.2 ASME B & PVC-1995, Section IX - Qualification Standard for Welding and Brazing

2.1.3 ASME NQA-1-2000, Quality Assurance Program Requirements for Nuclear Facility Applications

2.1.4 AWS D1.1-2000, Structural Welding Code, Steel

2.1.5 AWS D1.3-98, Structural Welding Code, Sheet Steel

2.1.6 AWS D1.6-99, Structural Welding Code, Stainless Steel

2.1.7 AWS D9.1-2000, Sheet Metal Welding Code

2.1.8 AWS D14.6-96, Welding of Rotating Elements of Equipment

2.1.9 OSHA 29 CFR 1910, Occupational Safety and Health Standards

2.1.9.1 Subpart O Machinery and Machine Guarding

2.1.9.2 Subpart S Electrical

2.1.10 NFPA 70-1999, National Electrical Code

2.2 Industry Standards

2.2.1 ABMA 9-1990, Load Ratings and Fatigue Life for Ball Bearings

2.2.2 ABMA 11-1990, Load Ratings and Fatigue Life for Roller Bearings

2.2.3 AMCA 99-86, Standards Handbook

2.2.4 AMCA 99-2404-1978, Drive Arrangement for Centrifugal Fans

2.2.5 AMCA 99-2406-1983, Designations for Rotation and Discharge of Centrifugal Fans

2.2.6 AMCA 210-1999, Laboratory Methods of Testing Fans for Rating

2.2.7 AMCA 300-2005, Reverberant Room Method of Sound Testing of Fans

2.2.8 AMCA 301-1990, Method for Calculating Fan Sound Ratings From Laboratory Test Data

2.2.9 ANSI / API Std 670, Machinery Protection Systems.

2.2.10 ASNT-SNT-TC-1A-2001, ANST Recommended Practice

2.2.11 ASTM A36-01, Standard Specification for Structural Carbon Steel

2.2.12 IEEE 1050-1996, IEEE Guide for Instrumentation and Control Equipment Grounding in Generating Stations

2.2.13 IEEE 1202 IEEE Standard for Flame Testing of Cables for Use in Cable Tray in Industrial and Commercial Occupancies

2.2.14 ISO 3744-1995, Acoustics - Determination of Sound Power Levels of Noise Sources Using Sound Pressure - Engineering Method in an Essentially Free Field over a Reflecting Plane

2.2.15 NEMA 250, Enclosures for Electrical Equipment

2.2.16 NEMA ICS 6, Enclosures

2.2.17 NEMA MG 1-1998, Motors and Generator

2.3 Reference Documents/Drawings

2.3.1 24590-WTP-3PS-AFPS-T0001, Engineering Specification for Shop Applied Special Coatings for Steel Items and Equipment, as tailored in Attachment A.

2.3.2 [24590-WTP-3PS-EKP0-T0001, Engineering Specification for Package Equipment, as contained in Section 3.9]

2.3.3 24590-WTP-3PS-FB01-T0001, Engineering Specification for Structural Design Loads for Seismic Category III & IV Equipment and Tanks.

2.3.4 24590-WTP-3PS-G000-T0001, Engineering Specification for Supplier Quality Assurance Program Requirements

2.3.5 24590-WTP-3PS-G000-T0003, Engineering Specification for Packaging, Handling and Storage Requirements

2.3.6 24590-WTP-3PS-G000-T0014, Engineering Specification for Supplier Design Analyses

2.3.7 24590-WTP-3PS-G000-T0019, Acquisition of Commercial Items and Services for Use in Safety Applications at WTP.

2.3.8 24590-WTP-3PS-JQ06-T0005, Engineering Specification for Environmental Qualification of Controls and Electrical Systems

2.3.9 [24590-WTP-3PS-JQ07-T0001, Engineering Specification for Instrumentation for Package Systems, as contained in Section 3.11]

2.3.10 24590-WTP-3PS-MUMI-T0002, Low Voltage Induction Motors

2.3.11 24590-WTP-3PS-SS90-T0001, Seismic Qualifications of Seismic Category I/II Equipment and Tanks

2.3.12 24590-WTP-LIST-CON-08-0001, Restricted Materials list WTP Safety Assurance

3 Design Requirements

3.1 General

3.1.1 Design of the Blowers shall conform to ASME AG-1, Section BA. Prior to fabrication, the supplier shall submit a compliance matrix that demonstrates how each of the AG-1

requirements are met. For AG-1 requirements that do not apply to the equipment being procured, the supplier shall show how the intent of the requirements is being met.

3.1.2 The Blowers will provide the motive force required to move ventilation air in the RPP-WTP ventilation systems and gaseous effluent in process systems, as shown in the Fan Data Sheets.

3.2 Basic Function

3.2.1 The blowers will provide the motive force required to transport and discharge air and gaseous effluents to atmospheres, as shown in the Blower Data Sheets.

3.2.2 Blowers shall be stable throughout its entire range from free flow to shut off conditions.

3.3 Performance

3.3.1 Blower performance ratings shall be tested in accordance with AG-1 Section BA 5121. Blowers shall be capable of performing at conditions shown on the Blower Data Sheets.

3.3.2 Design basis performance and capacity data are as listed on the Blower Data Sheets.

3.3.3 The equipment and appurtenances will be used in a plant that has design life of 40 years. The design objective for these centrifugal fans shall be based on a useful life expectancy of 40 years with periodic maintenance as recommended by the Seller. The supplier shall provide a brief description and justification for the Mean Time Between Failure figure provided on the Blower Data Sheets.

3.4 Lifting and Handling Requirements

3.4.1 For lifting and handling requirements, see Spec 24590-WTP-3PS-G000-T0003.

3.5 Sound Ratings

This requirement covers noise requirements for blowers, including all motors, equipment, and sub-systems furnished by the Supplier. The noise limit applies to operation of the Equipment at rated load or full capacity, and during restart and shut down. When the Equipment or a sub-system is operated cyclically or intermittently, the noise limits apply during all portions of the cycle

3.5.1 Blowers sound ratings shall conform to AMCA 301, and be tested in conformance to AMCA 300 or ISO 3744. Sound level data report shall be in accordance with ASME AG-1 BA-4421.

3.5.2 The A-weighted sound pressure level at 3 feet from the surface of the blower casing shall not exceed 85 dBA. The limit applies on each of four sides of the blower at the elevation of the centerline of the blower, but no less than 3 feet above grade or the platform upon which the blower is mounted. All sound pressure level limits apply to each blower system taken as a whole, and as installed.

3.5.3 If sound pressure level exceeds 85 dBA at 3-feet, Seller shall obtain Buyer permission to proceed in the form of a submittal stating estimated sound power level.

3.5.4 If specified on Blower Data Sheets, silencers shall be provided to meet the sound pressure level.

3.6 Environmental Qualification

3.6.1 Environmental equipment qualification of the blowers, motors, instruments, and electrical accessories shall be conducted in accordance with specification 24590-WTP-3PS-JQ06-T0005, Engineering Specification for Environmental Qualification of Control and Electrical Systems and Components.

3.6.2 The environmental conditions for the plant rooms in which the blowers are located are listed on the Environmental Qualification data sheets attached to the blower data sheets.

3.7 Seismic Qualification

3.7.1 Seismic qualification of blowers shall be in accordance with the methods and procedures described in Specification 24590-WTP-3PS-SS90-T0001, "Seismic Qualification of Seismic Category I/II Equipment and Tanks", or 24590-WTP-3PS-FB01-T0001, "Structural Design Loads for Seismic Category III/IV Equipment and Tanks".

3.7.2 The Seismic Category of the blowers will be indicated on the Blower Data Sheets.

3.7.3 Any additional structural loading will be indicated on the Blower Data Sheets. In-Structure Response Spectra (ISRS) curves for Seismic Category I/II equipment or items are attached to the blower data sheets.

3.7.4 In addition to seismic analysis, seismic testing of a sacrificial unit to determine operability shall be required when the Equipment Qualification data sheet states the equipment must be operational after a seismic event. Material from the sacrificial units shall not be used in tagged equipment (permanent plant equipment).

3.7.5 The Buyer may witness the seismic testing of blowers.

3.8 Mechanical Requirements

3.8.1 General

3.8.1.1 Blower housings shall be designed for both positive pressures of greater than 125 % of the design operating pressure of the blower and negative pressures as specified on the blower data sheets.

3.8.1.2 Blower inlets and outlets shall include allowances for the full dead weight of any flexible connections connected to the inlet and outlet.

3.8.1.3 Shaft speed shall not exceed 3600 rpm unless approved by Buyer. Tip speed of rotating assembly shall not exceed 530 fps unless approved by Buyer.

3.8.1.4 Blower housings shall be designed to prevent any internally propelled missiles from penetrating the housing.

3.8.1.5 Blower inlet and discharge connections shall be provided with temporary protective cover. These covers will be removed prior to connection to Buyer's piping and/or ductwork.

3.8.1.6 If specified on the blower data sheets, braided stainless steel 316L flexible hoses with stainless steel 316L flanges shall be provided to mate with the blowers' inlet and outlet flanges. Stainless steel connectors shall have flexible core of annular corrugated stainless steel 316L tubing. Braid for the connectors shall be stainless steel 304. End fittings shall be 150# raised face stainless steel 316L flanges conforming to ANSI dimensions. Connectors shall be shipped loose for field installation.

3.8.1.7 Unless specified otherwise on data sheets, blowers shall be "Gas Tight" in accordance with requirements of Section BA 4142 of ASME AG-1.

3.8.1.8 Blower drive arrangement shall be as shown on Blower Data Sheet. Drive arrangement designations shall be per AMCA 99-2404. Designations for rotation and discharge shall be per AMCA 99-2406.

3.8.1.9 When indicated on the Blower Data Sheets, Supplier shall provide an evase for installation on fan discharge. Evase shall be all welded construction and provided with flanged and gasketed inlet and outlet.

3.8.1.10 When indicated on the Blower Data Sheets that blowers shall be of Spark Resistant Construction, blowers shall be Type A in accordance with AMCA 99-0401-86.

3.8.2 Access Doors and Inspection Ports

3.8.2.1 If indicated on Blower Data Sheets, Seller shall provide a flanged, bolted, and gasketed access door, complete with handle, in blower housing to allow inspection. Access door shall be raised design to allow for field installed 2.5 in. thickness insulation when required.

3.8.2.2 The access door, when required, shall be on the horizontal centerline of the blower. Door gasket and seal pads shall meet requirements of ASME AG-1 Article FE-3130.

3.8.3 Balance and Vibration Standards

3.8.3.1 The blower wheel/impeller and shaft shall be dynamically balanced in accordance with Section BA-4161 of ASME AG-1. The blower wheel shall be dynamically balanced prior to assembly into the housing. Final balancing shall be performed on the completed rotor (impeller and shaft) assembly. All vibration tests shall be in accordance with ASME AG-1, Section BA-4162, with results documented and submitted to Buyer.

3.8.3.2 Soft foot is the condition where the bottoms of the equipment "feet" or "base" are not machined flat in the same plane or parallel with their mating (or

mounting) surface creating a situation where all the "feet" or "base" are not equally supporting the weight of the equipment. Each foot must be checked for soft foot. Any vertical or angular soft foot that exceeds 0.003 inches is excessive and must be corrected.

3.8.4 Bearings

3.8.4.1 Seller shall provide a "heat slinger" device attached to the blower shaft external to the housing to help in dissipation of heat for bearing protection, as required. The "heat slinger" shall be equipped with safety guards.

3.8.4.2 For all blowers, it shall be possible to replace the bearings without disconnecting any piping and/or ductwork or disassembling of the blower housing.

3.8.4.3 Bearings for blowers shall be heavy-duty pillow block, self-aligning, grease-lubricated ball bearings, or heavy duty pillow block self-aligning, grease-lubricated roller bearings, suitable for the maximum operating temperature as indicated on the Blower Data Sheets.

3.8.4.4 Bearings for blowers shall have a minimum L-10 service rating life of 200.000 hours, unless noted otherwise on the data sheets. Bearing rating life shall be established in accordance with ABMA 9 or 11, as applicable.

3.8.4.5 Provide seals to prevent loss of lubricant and admission of contaminants.

3.8.4.6 Provide extended lube lines and fittings as required to permit lubrication during operation.

3.8.4.7 Bearing lubricants shall be suitable for use in radiation levels as specified on the Environmental Qualification data sheet attached to the Equipment data sheet.

3.8.5 Shafts

3.8.5.1 No contact shall be made between the shaft rotor and the housings, other than through the bearings.

3.8.5.2 Shafts shall be of the material specified on the blower data sheet and shall be turned, ground and polished, with machined keyways for attaching impeller and drive coupling.

3.8.5.3 Impeller(s) are to be secured to the blower shaft by locknuts or set screws.

3.8.5.4 The blower impeller and shaft shall be rated for 110% of the design rpm listed on the Blower Data Sheets.

3.8.6 Shaft Seals

3.8.6.1 Blowers shall be furnished with shaft seals as specified on the Blower data sheet .

3.8.6.2 Shaft seals shall be fully capable of withstanding the required test pressures before, during, and after blower operation.

3.8.7 Safety guards

3.8.7.1 Blowers shall be provided with bolted drive guards that cover the shaft and bearings. Provisions shall be made for insertion of tachometer and access to lube fittings without removal of drive guards.

3.8.7.2 Safety guards shall be expanded metal with an angle framework or shall be formed plate types.

3.8.7.3 The guards shall comply with the requirements of OSHA 29 CFR 1910 Subpart O - Machinery and Machine Guarding.

3.8.8 Loadings

3.8.8.1 Blower assemblies shall be self-supporting, capable of carrying the static loads of the blower components and the stress imposed during shipment, installation, and operation.

3.9 Electrical Requirements

[Source: 24590-WTP-3PS-EKP0-T0001, Rev 3]

3.9.1 Criteria for Acceptability of Electrical Equipment
[Section 2.0, 24590-WTP-3PN-EKP0-00005]

- All electrical equipment for facility and equipment wiring, as defined by the National Electrical Code NFPA 70-1999, shall be Approved. Approval will be in accordance with Article 90-4, "Enforcements", Article 90-7, "Examination of Equipment for Safety," and Article 110-3, "Examination, Identification, Installation, and Use of Equipment."
- Approved means "Acceptable to the Authority Having Jurisdiction" (AHJ), as defined in Article 100 of NFPA 70-1999. Only the WTP Electrical AHJ can provide the approval.
- "Equipment" is defined by the NFPA 70 as, "A general term including material, fittings, devices, appliances, fixtures, apparatus, and the like used as a part of, or in connection with an electrical installation". As used here, the entire mechanical assembly is not considered an electrical installation, only the electrical and/or electronic components, and the interconnecting wiring.
- Listing and labeling by an OSHA Recognized NRTL is the primary means (Method 1 below) of obtaining WTP AHJ approval for electrical equipment, devices and materials.
- All Control Panels shall be UL labeled by a certified UL 508A shop.
- Electrical Equipment that is installed on (standard or custom fabricated) Mechanical Equipment shall comply with the requirements stated above.
- Electrical Equipment, that is part of a Mechanical Packaged Equipment assembly, being field-evaluated and labeled at the factory by a NRTL is an alternate method of obtaining WTP AHJ approval.

3.9.1.1 Method 1 (Primary): Listed, Labeled or Certified (i.e. UL508A) [Section 2.1, 24590-WTP-3PN-EKP0-00005]

The WTP AHJ shall approve and accept electrical equipment without additional examination if it is Listed, Labeled, or Certified by a US NRTL, as recognized by OSHA under 29 CFR 1910-Subpart S and is acceptable for the application, environment and other requirements of NEC Article 110. For a listing of and Typical Registered Certification Marks of US NRTL's recognized by OSHA go to http://www.osha.gov/dts/otpca/nrtl/nrt1mrk.html.

3.9.1.2 Method 2 (Alternate): Field Evaluation by a NRTL [Section 2.2, 24590-WTP-3PN-EKP0-00005]

3.9.1.2.1 Electrical equipment that is part of an overall electrical or mechanical assembly having a NRTL safety evaluation or a field evaluation, which states the equipment has been accepted or otherwise deemed safe by the NRTL recognized by OSHA under 29 CFR 1910-Subpart S, using US standards, will be evaluated by the WTP AHJ for acceptability. If found acceptable no further examination of the equipment is required.

3.9.1.2.2 The supplier shall submit all field evaluation reports completed by an OSHA recognized NRTL to the Buyer for review and approval by the AHJ. These field evaluation reports shall show compliance to the applicable USA Electrical Standard(s) recognized by OSHA that are listed on the OSHA website http://www.osha.gov/dts/otpca/nrt1/allstds.html.
The NRTL Label will be as shown on the OSHA website with whatever additional markings that are necessary to indicate acceptability for use in the USA http://www.osha.gov/dts/otpca/nrtl/nrtlmrk.htm.

3.9.1.2.3 The supplier shall submit a Certificate of Compliance (C of C) document for review and approval by the AHJ that lists the USA Electrical Standard(s) that each electrical material or equipment is evaluated to for it's NRTL Listing. Only those standards that are listed on the OSHA website http://www.osha.gov/dts/otpca/nrtl/allstds.html are acceptable to the AHJ. The certification shall confirm that the NRTL Label for each electrical component will be as shown on the OSHA website including the additional markings required to indicate acceptability for use in the USA http://www.osha.gov/dts/otpca/nrtl/nrtlmrk.html.

3.9.1.3 If a supplier is unable to meet the criteria in Method 1 or Method 2, the supplier shall request in writing, a variance by the WTP Electrical AHJ. [Section 2.3, 24590-WTP-3PN-EKP0-00005]

3.9.2 Power Protection and Disconnecting Means

3.9.2.1 Enclosures with incoming power supply, shall have a manually actuated disconnecting means mounted on or close to the enclosure, in an easily accessible location.

3.9.2.2 Devices in panels utilizing power shall have suitable over current protection. Power shall not be "daisy chained" from device to device; however, bridge or comb jumpers may be used on the supply side of the circuit breaker or a fuse block.

3.9.3 Space heaters in enclosures, when furnished, shall be rated 240 V AC with required heat output when operated with 120 V AC. [Section 5.4.5]

3.9.4 Cables and Wiring
[Section 5.5]

3.9.4.1 Other than the special cables furnished by Supplier, cables shall be in accordance with the following:[Section 5.5.2]

a) Low voltage power and control cables shall be stranded copper, 600 V type XHHW-2 or Buyer-approved equivalent.

b) Where applicable, cables shall be rated for the radiation dose rates and service life in the environment specified by the primary specification.

c) Internal wiring shall be stranded copper, flame-retardant, 600 V, synthetic heat resistant (SIS), or machine tool wire (MTW), or high-flexible thermoset.

d) The minimum size of conductor will be as follows (not including cabling integral to components):

DUTY	External Conductor Size (AWG)	Internal Wiring in enclosures Size (AWG)
Power and Lighting (480 V and below only)	12	14
Current Transformer Wiring	10	10
Control Circuits (120 V AC / 125 V DC) and Instrument power circuits	14	16

e) Approximately 10% spare conductors shall be included in multi-conductor 300 V analog and low-level signal cables. Spare conductors shall be terminated on the terminal blocks. [24590-WTP-3PN-EKP0-00004]

3.9.4.2 Interconnecting wiring or cabling for packaged units furnished by supplier, shall be terminated and tested according to this specification. [Section 5.5.3]

3.9.4.2.1 Internal wiring shall be continuous from terminal to terminal without splices (except devices with pig tails). Bridge or comb jumpers are preferred to wire jumpers on terminal strips. Jumpers shall not be installed on field side of the terminal strip. [Section 5.5.3.1]

3.9.4.2.2 Circuits of different voltages (service level) shall be terminated on physically separate terminal strips and clearly labeled to show the circuit voltage. Terminal blocks shall be segregated according to signal type. [Partial Section 5.5.3.3]

3.9.4.2.3 AC power shall be routed through separate wireways or separated with a divider from 24 VDC discrete and analog instrument signals within enclosures. Power and signal cabling shall not be run in parallel, except in separate wireways, and should cross at a 90-degree angle only. [Section 5.5.3.4]

3.9.4.3 The Supplier shall furnish terminal boxes or control panels as follows: [Partial Section 5.5.4]

3.9.4.3.1 Instrumentation cables shall be terminated in separate junction boxes from the power and control cables.

3.9.4.3.2 Where cables supplied and installed by Buyer are run to the package unit, the Supplier shall provide space for installing and terminating the cables.

3.9.4.4 Wiring for electronic, instrument, communication and signal cables shall be segregated from both power and control cables. [Section 5.5.5]

3.9.5 Conduit System

3.9.5.1 Wiring shall be installed in metal conduit. Minimum conduit size shall be ¾ inch. ½ inch conduit is allowed when connecting to devices with ½ inch hubs. [Section 5.6.1.1]

3.9.5.2 Liquid-tight flexible metallic conduit shall preferably be used to isolate the transmission of vibration to the conduit system, and for connection to equipment which may be periodically removed. [Section 5.6.1.2]

3.9.5.3 Where conduit is exposed to potential water spray (outdoor or indoor), it shall be sloped for drainage. A stainless steel breather shall be installed at the high point of the conduit system, and a stainless steel drain shall be installed at the low point of vertical conduit runs complying with UL and NFPA standards. [Section 5.6.1.4]

3.9.5.4 Conduit connections to junction boxes shall be made using watertight threaded hubs or factory threaded hubs. [Section 5.6.1.5]

3.9.5.5 Enclosures shall be designed for front access only unless otherwise specified. All components and equipment in enclosure shall be accessible and removable from the front. Enclosures shall be suitably rated for the environment specified. [Section 5.6.4]

3.9.6 Non-current carrying metallic parts of electrical equipment shall be bonded together and made electrically continuous. Two grounding pads shall be furnished at diagonally opposite corners at the edge of skids for connection by the Buyer to the area ground grid. [Section 5.7.1]

3.9.7 Electrical equipment on the packaged unit shall be bonded to the package unit skid. [Section 5.7.2]

3.9.8 Nameplates
[Section 5.10]

3.9.8.1 Permanent nameplates or labels shall be provided to identify terminal blocks within the compartments.

3.9.8.2 Exterior nameplates shall be made of laminated, beveled plastic of manufacturer's standard, with black lettering or numbering on a white background and shall be

permanently affixed on the exterior. The method of affixing shall not violate the NEMA rating of the enclosure. [Section 5.10.2]

3.9.8.3 Interior labels for all devices, parts and components shall be machine printed, permanent and self-adhesive labels.

3.10 Low Voltage Induction Motors

3.10.1.1 Motor drive combination shall be suitable for operation for the design conditions shown on the Blower Data Sheets.

3.10.1.2 Induction motors shall be in accordance with Specification 24590-WTP-3PS-MUMI-T0002, Low Voltage Induction Motors, and as indicated on the motor data sheets appended to the Blower Data Sheets except:

- Motors may have cast iron rotor cages.
- Motors space heater are required for the purpose of long term storage. The motor space heaters do not have to be removable. See specification 24590-WTP-3PS-MUMI-T0002, Section 3.4 for heater requirements.

3.10.1.3 Drive motors shall be specifically designed and constructed for use with adjustable speed drives in conformance with NEMA MG-1 Part 31 criteria. Manufacturer shall provide certification to the Buyer that the motor is compatible with an adjustable speed drive and will perform within the specified duty range without incident.

3.10.1.4 Transient voltage variations due to short circuits, disturbances from outside supplies, and their effect on plant operation cannot be avoided. The following criteria shall apply in such cases: Momentary voltage depression down to 80% of rated equipment voltage shall not affect equipment operations.

3.10.1.5 The motor shall have a rated horsepower minimum of 115% of the design brake horsepower (bhp) listed on the Blower Data Sheets. The motor shall also have a service factor of 1.15 at its rated horsepower.

3.11 Instrumentation and Control Requirements

[Source: 24590-WTP-3PS-JQ07-T0001, Rev 2]

3.11.1 The Buyer will provide normal power for the Supplier's instruments. Each source will be delivered at 120 VAC, single phase, 60 Hz, grounded system. 480 VAC, 3 phase, 60 Hz power will be provided as required for motors. All other voltages required by the Supplier shall be derived from the Buyer provided 120 VAC or 480 VAC. [Section 1.7.3]

3.11.2 Table 1 of this specification includes a list of recommended suppliers of instruments. Bidder's proposal shall include cost associated with the use of Buyer designated instruments. [Appended Section 3.4.1, 24590-WTP-3PN-JQ07-00012]

Table 1. Instrument Supplier List

Description	Supplier	Comments
Temperature Sensor(RTD)	Daily Thermetrics	
	IST Conax Nuclear	ITS OK for Rad service
	Emerson (Rosemount)	
	Temp-Pro Inc.	
	Thermoelectric	OK for Rad service
	United Electric	
Speed Sensor	Air-Pax	
	Electro-Sensors	

3.11.3 Instrument ranges shall be selected such that the normal operating point is between 35% and 75% of the range of the instrument. Except where the Buyer has specifically identified manufacturer and model, all the instruments shall be selected by the Supplier in accordance with guidelines provided herein. The instruments described below shall be selected to meet the required safety classification, specified quality, and the design criteria stated herein and in the primary equipment specification. The systems designed and fabricated shall meet the specified reliability and availability for each system or component.

The Supplier may suggest alternative instruments based on their past experience with similar applications subject to the Buyer's review and concurrence. [Section 3.4.5]

3.11.4 Temperature measurement devices shall be selected that are optimized for the application and environment of the measurement services. This includes installation constraints, ambient conditions, and process conditions of the measurement devices. The following describes the Buyer's requirements for specific types of temperature measuring elements and systems. [Section 3.4.5.2]

- All temperature elements, Thermocouples (T/Cs) or Resistance Temperature Devices (RTDs), shall be installed in thermowells to permit removal without process disturbance except where there is no risk to personnel from the process fluid during removal of the measuring element, i.e. shell skin, motor bearings and motor windings. Where a thermowell is not used, a permanent label shall be affixed to the primary element, indicating that there is no thermowell.

- Sheathed RTDs with transmitters shall be used for remote temperature indication.

- RTD elements shall be Platinum with a nominal resistance of 100 Ohm at 0 °C (32 °F). The resistance-vs.-temperature characteristic curve shall conform to DIN 43760, IEC 60751 with a temperature coefficient of 0.00385 ohms/ohm/°C. Three wire element design shall be used.

- RTDs shall be sheathed with Magnesium Oxide insulation. The sheath shall be 316SS and ¼" diameter as a minimum. All T/Cs or RTDs shall be duplex design, spring loaded, and supplied with a connection head with internal grounding screw and external ground terminal. All elements shall be connected in the connection head.

- Temperature measurements using RTDs shall use remote mounted transmitters with the appropriate input/output voltage isolation and located in the field or panel to connect an isolated signal to the Buyer's or Supplier's control system. [Section 3.4.5.2.1]

3.11.5 If specified on the data sheets, the Supplier shall provide and install non-contacting vibration and position sensor probes for machine monitoring of both radial vibration. and thrust position of the shaft. The installation of all bearing thermocouple and shaft position monitoring equipment shall be in accordance with API 670. Bearing thermocouples shall be type E calibration. [Section 3.4.5.16.1, *Instrumentation*, 24590-WTP-3PS-JQ07-T0001]

3.11.6 If required on Blower Data Sheet, speed transmitters shall have sensors of non-contact type. [Altered Section 3.4.5.16.2]

3.11.7 All enclosures, cabinets, panels, and racks shall be designed and fabricated to be in full compliance with NFPA 70-1999. [Partial Section 3.6]

3.11.7.1 All enclosures shall be designed for front access only unless otherwise specified. All components and equipment in the enclosure shall be accessible and removable from the front. Enclosures shall be indoor per the NEMA 250 and ICS 6 standards based on the environmental specification requirements. A NEMA rating of 12 shall be the minimum acceptable requirement for indoor enclosures. In areas where radioactive contamination is likely, only stainless steel enclosures shall be used. [Section 3.6.1]

3.11.7.2 All packaged systems and equipment controls shall be pre-wired to terminal blocks in permanently mounted enclosure.

The terminal blocks shall be designed for easy interconnection to Buyer's control and communication circuits.

Access to enclosure internal components or equipment shall not require the use of hand tools. Access to any component within the enclosure for maintenance or replacement shall not be prevented by proximity to other components within the enclosure. Equipment mounted in the rear of the enclosure shall be on a back-panel and positioned to facilitate removal and replacement. Enclosure back-panels shall be fabricated from low-carbon steel and shall be finished with semi-gloss or gloss white paint. Enclosures shall be sized to allow clearance between the enclosed components, cables, print pockets, and components mounted on the door. [Partial Section 3.6.3]

3.11.7.3 The enclosure grounding system shall be installed in conformance to IEEE Guide 1050-1996, section 5.3.1 "Single point grounding system". Instrument junction box shall only have an equipment safety ground. The grounding bus shall be constructed with solid copper, and all connections shall be drilled and tapped. The ground bus shall be drilled and tapped for an additional 20 percent spare terminations.

The equipment safety ground bus shall be solidly bolted to the enclosure structure. A bolted compression type 2/0 terminal lug shall be installed at each end of the bus to facilitate connection of Buyer's 2/0 AWG stranded copper ground cable.

All removable metal components, instruments, or electrical devices shall be connected via individual conductors to the equipment safety ground bus. Components shall not be grounded to each other via a common wire connecting the components to the equipment safety ground bus. Enclosure door and back-panel shall be connected to the equipment safety ground bus via individual conductors. Ground conductors connected to the equipment safety ground bus shall have an insulation color code of green.

The isolated signal ground bus shall be electrically isolated from the enclosure structure and the safety ground bus. A bolted compression type 2/0 terminal lug shall be installed at each end of the isolated ground bus to facilitate connection either to another isolated signal ground bus in a connected adjacent enclosure or to Buyer's 2/0 AWG stranded copper ground cable.

Instrument cable shields and signal common conductors shall be connected to the isolated signal ground bus. Each signal ground conductor shall be fastened to the isolated signal ground bus. For junction boxes with signal wiring going back to the Buyer's control system, the cable shield shall be terminated on a isolated terminal block and carried back to a ground supplied by the Buyer. Ground conductors connected to the isolated signal ground bus shall have an insulation color code of green with yellow tracer. [Section 3.6.5]

3.11.7.4 The Supplier shall mount, connect and wire each instrument or control device such that adjustment, maintenance, removal and replacement may be accomplished in a safe manner without interruption of service to adjacent but unrelated equipment and without placing undue stress on installed wiring or devices. Accommodations for strain relief shall be made when routing wire to hinged enclosure doors and shall be wrapped with spiral wire wrap.

No more than two wires shall be connected to one terminal point and only if the terminal is rated for the two wires. Wire splicing shall not be used unless approved by the Buyer. Bridge or comb jumpers are preferred to wire jumpers on terminal strips. Jumpers shall not be installed on the field side of the terminal strip.

Terminal blocks shall be selected to accommodate the function and electrical requirements associated with each wiring application. They shall incorporate the following features:

1. Space saving design
2. Screw clamp wire connection

3. Single level configuration
4. Integral test facilities
5. DIN-rail (35mm) mounted

Isolating type terminal blocks shall be Weidmuller "W" series, Allen Bradley 1492-WKD3TP, Phoenix Contact, or Buyer approved equal. Non-isolating feed-thru terminal blocks shall be Weidmuller "W" series, Allen Bradley 1492-W4, Phoenix Contact, or Buyer approved equal. All terminal blocks shall be identified by a unique terminal block number and approved by the Buyer.

For all enclosures, each incoming power supply shall have a manually actuated electrical power disconnect device mounted on/in the enclosure in an easily accessible location. The electrical power disconnect device may be a single device or multiple devices for individual circuits. Each device that uses 120 VAC for power shall have individual connections protected via rail mounted circuit breakers. The circuit breakers used for individual control or power circuit protection in the enclosure shall be thermal magnetic breakers such as Weidmuller CB, Allen Bradley type 1492-GH, Phoenix Contact, or Buyer approved equal. They shall be Dual-In-Line, DIN-rail mountable TS35, TS32, or equivalent. Power shall not be "daisy chained" from instrument to instrument; however, the bridge or comb jumpers may be used on the supply side of the circuit breakers. A fuse and circuit breaker directory shall be contained in a holder permanently affixed on the inside of each door or back-panel and protected by a clear window.

AC power shall be routed through separate wireways or separated with a divider from 24 VDC discrete and analog instrument signals within enclosures. Power and signal cabling shall not be run in parallel, except in separate wireways, and should cross at a 90-degree angle only.

All instrument signal cables shall be of the type and specification as listed in Table 2 - Instrumentation Cable Schedule. Power cable, wire size and type shall be in accordance with Section 3.9.4.1 d).

Table 2. Instrumentation Cable Schedule

Cable Code	Cable Description	Specific Cable Spec.	Comments	Circuit Identification	Cable General Specification
1TSPR#16	Single twisted pr. #16 AWG, 300 V, ITC, PLTC	Single twisted pair with overall foil shield	Individual instrument signals, instrument 24 vdc power	Black, White	Cables UL listed as ITC and PLTC, 300 V insulation, UL 1581 listed for 70,000 BTU vertical tray flame test; 100% foil polyester/aluminum individual and overall shields with 22AWG Drain wire. Each circuit shall have a minimum of 6-8 twists/ft.
2TSPR#16	Two twisted shielded pr # 16AWG, 300V, ITC, PLTC	individually twisted shielded pairs with overall foil shield		Black, White conductors - individual circuits numbers	

All wires and cables external to an enclosure shall be of the instrument tray cable (ITC) type, flame-retardant (passes IEEE 1202 vertical flame test), and have a 90 °C continuous rating in wet or dry locations. All cable insulation and jacket material shall be resistant to heat, moisture, impact, ozone, and meet or exceed the following requirements:

- 300 V rated for low voltage instrument cables (operating at 150 volts or less and 5 amperes or less)
- 600 V rated for power/motor control cables (up to 480 VAC and 250 VDC)

The wire insulation color for power wiring shall be of the following:

• Black	Ungrounded conductors more than 50 VAC
• White	Grounded conductors more than 50 VAC
• Green	Equipment grounding wire
• Green/Yellow tracer	Isolated instrument grounding wire
• Light Blue	Ungrounded supply voltage less than 50 V (DC or AC)
• Violet	Switched ungrounded voltage less than 50 V (DC or AC)
• White/Blue tracer	Grounded or return supply voltage less than 50 V (DC or AC)

[Partial Section 3.6.6]

3.11.7.5 The enclosures shall be designed so that tools and test equipment may be used to accomplish all necessary adjustments, maintenance, cleaning, testing, and calibration. If specialized tools are needed for adjustments, maintenance, cleaning, testing, and calibration the Supplier shall provide two sets per order to Buyer upon delivery. Test points and calibration areas shall be accessible, clearly identified, and labeled. Adequate space shall be provided for removal and replacement of individual instruments or components located inside the enclosure. Equipment mounted in the rear of the enclosure shall be positioned to facilitate removal and replacement from the front of the enclosure. [Section 3.6.7]

3.11.7.6 Buyer will provide the enclosure name, service description, and wire marker syntax and name/number.

Safety Labels shall not be attached to removable items that could be replaced in a different orientation.

Each wire shall be clearly identified with a wire marker at each end by means of heat shrinkable plastic sleeves or other Buyer approved permanent type wire marker in black text on white background. Open markers or "C" type sleeves that can be applied after a conductor is terminated will not be accepted. Minimum character size for wire marker shall be no less than 3/32 inch. The wire markers shall be attached within a maximum of 2 inches from the termination of the wire. Orientation of the wire marker shall be such that its identification is visible when viewed from the front of the enclosure looking in. [Partial Section 3.6.8]

3.11.8 All Supplier provided wiring shall be identified at each end with a numbering system that is cross-referenced on all appropriate drawings. The wire-numbering scheme shall be proposed by the Supplier with Buyer's concurrence. Ferrules or wire markers shall be indelibly and clearly marked in black on white plastic, heat shrinkable sleeves. Open markers or "C" type sleeves that can be applied after a conductor is terminated will not be accepted. Junction box (JB) terminals shall have adequate space between them and the JB internal walls so connected cables and individual wire numbers can be easily read without disturbing the wiring within the JBs.

All cables provided by the Supplier shall be clearly identified with a heat shrink type label. [Section 3.7.8]

3.11.9 Instrument mounting locations shall be selected with consideration of both function operation and accessibility requirements for maintenance. Instrumentation should not be mounted on vibrating equipment or light duty support. Instrument mounting bolting and hardware shall be 316 SS. [Section 3.8.8]

3.11.10 Each instrument shall be installed so as to allow adequate safe access for both operation and maintenance. [Section 3.8.8.2]

3.11.11 Each Instrument shall have nameplate information that includes the following:

- Manufacturer's Name
- Manufacturer's model and serial number
- Buyer's Purchase Order No.
- Buyer's Item No.
- Buyer's Tag Number
- Power Rating
- Electrical Area Classification
- Approvals and Listing per NEC

Where the combination of manufacturer's standard nameplate and instrument body stampings are unable to accommodate all of the required and applicable information, a separate stainless steel nameplate shall be provided to include the Buyer's tag number, PO number, and all of the applicable missing information. This separate stainless steel nameplate shall have the information impressed, stamped or etched directly on the stainless steel surface. The nameplate, where physically possible, shall be secured to the body of the instrument by corrosion resistant screws tapped into a low stress area of the assembly, so the structural integrity and functional capability of the assembly are not impaired. If it is not physically possible to secure the nameplate to the body of the instrument, then the nameplate shall be attached using a stainless steel wire. [Section 8.1]

3.12 Accessibility and Maintenance

3.12.1.1 Seller's recommended accessibility and recommended spares for each piece of equipment shall be included in the Seller's submittal.

3.12.1.2 Seller shall provide the inspection and maintenance requirements with the recommended intervals to be performed by Buyer.

3.13 Accessories

3.13.1 Unitary Inertia Bases

3.13.1.1 When indicated on the Blower Data Sheets, blowers shall be provided with a unitary inertia base.

3.13.1.2 Unitary inertia base shall provide a common support for the unit and its drive motor. Inertia base shall be fabricated from structural steel conforming to ASTM A36, at the minimum, and shall include pre-drilled mounting templates and sleeved anchor bolts for the fan and its drive motor. Inertia base frame shall be structural channel or beam frame with its depth at least one-tenth (1/10th) the longest dimension of the base, as a minimum.

3.13.2 Vibration Isolators

3.13.2.1 When installation is specified on the data sheet, the vibration isolators shall be Supplier specified and supplied. Supplier shall specify the isolator manufacturer and model number, spring minimum diameter, and spring restraint features on the Blower Data Sheet.

3.13.2.2 Spring mounts shall be selected to provide 2 in. minimum deflection at design loading, and shall allow for 50 % additional travel to solid. Spring mounts shall incorporate seismic restraint capability for a seismic occurrence as defined in Specifications 24590-WTP-3PS-SS90-T0001, Seismic Qualification of Seismic Category I/II Equipment and Tanks or 24590-WTP-3PS-FB01-T0001, Structural Design Loads for Seismic Category III & IV Equipment and Tanks. Spring mounts shall include enlarged base plates for seismic anchoring.

3.13.2.3 Submittal drawings shall show locations for vibration isolator placement on blower assemblies when installation is specified on the data sheet.

3.13.2.4 Each vibration isolator shall deflect equally under the conditions of dynamic loading.

3.13.3 Flexible Connectors

3.13.3.1 When specified on the data sheet, Supplier shall provide flexible connectors. Supplier shall specify the connector manufacturer and model number on the blower data sheet.

3.13.3.2 When specified on the data sheet, submittal drawings shall show locations for or placement of flexible connectors on blower assemblies.

4 Materials

4.1 Construction

4.1.1 Materials of construction shall conform to ASME AG-1, Section BA, Article BA-3000, Table BA-3100 and the Blower Data Sheets as applicable.

4.1.2 The ASME and/or ASTM material numbers and grades shall be identified and shall be indicated on the fabrication drawings and in the material lists.

4.1.3 Blower bearing pedestals and motor bases shall be fabricated from structural steel shapes and plates properly reinforced for maximum rigidity.

4.1.4 Blower housings shall be fabricated from materials specified in Blower Data Sheets.

4.2 Prohibited Materials

4.2.1 Bronze, copper, lead, zinc, tin, antimony, cadmium, or other low melting point metals, their alloys, or materials containing such metals as their basic constituents or molybdenum, and materials with halogen content of more than 200 ppm shall not be used in direct contact with stainless steel.

4.2.2 Asbestos and Teflon shall not be used in any component of the blowers or accessories.

4.2.3 Certain chemicals and materials are restricted from use at WTP. Restricted chemicals and materials are given in 24590-WTP-CON-08-0001, Restricted Materials List. Inclusion of these chemicals/materials requires specific authorization from the Buyer (WTP Safety Assurance).

4.3 Special Requirements

4.3.1 When evaluating and dedicating new or replacement commercial grade items (CGI) and commercial grade services (CGS) for use in safety applications the requirements in specification 24590-WTP-3PS-G000-T0019, Acquisition of Commercial Items and Services for Use in Safety Applications at WTP, shall be followed.

5 Fabrication

5.1 Fabrication of Blowers

5.1.1 Fabrication of blowers shall be as specified in ASME AG-1, Article BA-6000.

5.1.2 Blower wheels / impellers shall be of the type and fabricated from materials specified in Blower data sheets.

5.2 Welding

5.2.1 All fabrication, welding, inspection and repair procedures of blower wheels, blower housing, housing framing and supports shall conform with the following, as applicable:

- AWS D1.1, Structural Welding Code, Steel
- AWS D1.3, Structural Welding Code, Sheet Steel
- AWS D1.6, Structural Welding Code, Stainless Steel
- AWS D9.1, Sheet Metal Welding Code

- AWS D14.6, Welding of Rotating Elements of Equipment

5.2.2 Repairs required as a result of weld rejection by either Buyer or Seller's final inspection shall be fully documented in accordance with Seller's QA program. Weld repair records shall be included with document package.

5.2.3 Welding procedures and procedure qualification records shall be submitted to Buyer for review and permission to proceed prior to use. Each procedure shall be prepared and qualified in accordance with the requirements of the above listed standards or ASME B & PVC, Section IX.

5.2.4 Welds shall be inspected in accordance with ASME AG-1, Article AA-6330.

6 Tests and Inspections

6.1 General

6.1.1 Inspection and testing of blowers shall conform to ASME AG-1, Section BA, Article BA-5000. Seller shall conduct and shall be responsible for the shop tests called for in this specification and in applicable standard and referenced documents. Seller shall furnish all facilities necessary for the performance of such tests.

6.2 Personnel Qualifications

6.2.1 Personnel performing nondestructive examination or reviewing nondestructive examination results shall be qualified in accordance with ASNT-SNT-TC-1A, Level II or Level III. Qualifications of personnel performing inspections and tests shall be verified by the Seller.

6.3 Non-Destructive Examinations

6.3.1 Seller shall perform Non-Destructive Examinations. Non-Destructive examinations may include visual, ultrasonic, radiographic, magnetic particle, liquid penetrant and eddy current examination procedures.

6.3.2 Non-Destructive Examination procedures shall be submitted to Buyer for review and permission to proceed prior to use.

6.3.3 All pressure boundary parts made by casting shall be demonstrated to be surface-defect free by penetrant examination using Type I Method A techniques in accordance with ASME BPVC Section V.

6.3.4 As a minimum all welds shall be 100% Visually Tested (VT) and pressure boundary welds shall be Liquid Penetrant Tested (PT). NDE reports shall be submitted for review and acceptance.

6.4 Shop Tests

Buyer's Inspector will indicate tests and inspections that the inspector intends to witness after review of Seller's work plan. Seller shall perform standard factory tests, which, as a minimum, includes the following tests listed below, as well as tests called out in referenced specifications.

Test procedures shall be submitted for acceptance and permission to proceed prior to testing.

All test results shall be certified, documented, and submitted to Buyer for review, and permission to proceed. All test reports shall be accepted by Buyer based on the acceptance criteria outlined in the Supplier's accepted test procedures.

The Inspector may witness the following required shop tests:

6.4.1 Test for blower performance. Performance testing shall be done for similar sized blowers.

6.4.1.1 Blower performance tests shall be conducted in accordance with AMCA standards and shall be done in AMCA certified facilities unless otherwise approved by Buyer. Inspection and test procedures shall be submitted to Buyer.

6.4.2 Functional performance test for electrical equipment.

6.4.2.1 The Supplier's shop tests shall include the following:

a) Megger test before termination of all wires pulled into conduit.
b) Continuity check of all wiring for conformance with drawings
c) Complete functional test of all apparatus and equipment
[24590-3PS-WTP-EKP0-T0001, Rev 3, Section 6.1.1]

6.4.2.2 The Supplier shall notify the Buyer at least two weeks prior to any final tests. The Buyer or his representative reserves the right to inspect the equipment and/or witness the tests at the factory. [24590-3PS-WTP-EKP0-T0001, Rev 3, Section 6.1.2]

6.4.2.3 The Supplier shall isolate all instruments and control systems before performing a megger test. [24590-3PS-WTP-JQ07-T0001, Rev 2, Section 6.2.2]

6.4.2.4 All wiring [provided by the Seller shall be verified by a 100 % point to point continuity test. Wiring errors detected shall be corrected and/or drawings corrected as appropriate prior to Buyer's inspection. [24590-3PS-WTP-JQ07-T0001, Rev 2, Section 6.2.3]

6.4.3 Blowers shall be tested and accepted for leakage in accordance with Section BA-5142 of ASME AG-1.

6.4.4 Vibration performance shall be checked and reported at 10% increments of full speed blower tests. Vibration testing shall not be performed within +/- 20% of the blower's critical speed.

6.5 Site Tests

Buyer startup personnel will perform test after initial installation. Buyer may request Seller assistance during startup.

7 Preparation for Shipment

7.1 General

7.1.1 Blower assemblies shall be packaged, shipped, handled and stored in accordance with ASME AG-1 Article BA-7000 and WTP specification 24590-WTP-3PS-G000-T0003, Engineering Specification for Packaging, Handling and Storage Requirements.

7.2 Cleanliness

Seller's cleaning procedures shall be submitted to Buyer for information. Prior to surface preparation and coating application, visually examine welds, the blower impeller, air stream surfaces of the blower housing, and the air stream surfaces of all furnished accessories. Remove all dirt, oil, and grease, loose mill scale, weld spatter and other foreign matter on surfaces to be painted in accordance with Seller's cleaning and coating procedures.

7.3 Painting and Special Protective Coatings

Painting and Special Protective Coatings shall meet the requirements in 24590-3PS-WTP-AFPS-T0001, as tailored in Attachment A.

7.4 Tagging

A stainless steel nameplate shall be attached to each centrifugal fan showing the manufacturer's name, shop location, date of manufacture, serial number, equipment rating, equipment tag numbers, weight of assembly, maximum speed, other information required by Paragraph BA-9110 of ASME AG-1 and Buyer purchase order number. Instruments shall be identified with Buyer provided tag numbers.

8 Quality Assurance

8.1 QA requirements specific to item(s) or service

8.1.1 The quality assurance program requirements of this specification are those specified in the following documents:

ASME NQA-1, marked as applicable in Q data sheet of ANSI/ASME NQA-1 (2000) Quality Assurance Program Requirements, attached to the Material Requisition.

ASME NQA-1 (2000), Part II, Subpart 2.2, *QA Requirements for Packaging, Shipping, Receiving, Storage and Handling of Items for Nuclear Power Plants*

24590-WTP-3PS-G000-T0001, Engineering Specification, *Supplier Quality Assurance Program Requirements*

8.1.2 The successful bidder must pass a pre-award survey by the Buyer. Supplier shall demonstrate that their quality program is in compliance with the procurement quality requirements listed in Quality Assurance Program Requirements Datasheets. Each supplier is required to flow-down required QA program requirements to each successive tier in the supply chain. The Supplier shall allow Buyer, its agent, and DOE access to their facility and any lower tier subcontractor's facility and records pertaining to this purchase order for the purpose of QA Audits and Surveillance at mutually agreed times.

8.2 Supplier Deviation

8.2.1 Each supplier shall be required to identify and promptly document all deviations from the requirements of the procuring documents. In addition, the supplier shall be required to described the recommended disposition based on appropriate analysis. Submittals of request for deviations from lower-tier suppliers shall be through the prime supplier to WTP.

8.2.2 Supplier-proposed deviations from procurement documents shall be initiated by use of Supplier Deviation Disposition Request (SDDR) form.

9 Configuration Management

Equipment and/or components covered by this specification are identified with Component Identification System numbers shown in Blower Data Sheets. Each item shall be identified in accordance with Section 7.4.

10 Documentation and Submittals

10.1 General

Seller shall submit to Buyer Engineering and Quality Verification documents in the forms and quantities shown in Form G-321-E, *Engineering Document Requirements*, and Form G-321-V, *Quality Verification Document Requirements*, attached to the MR.

10.2 Submittals

The Seller shall submit the following:

10.2.1.1 The Seller shall submit, prior to fabrication, a matrix showing how the supplier meets the requirements of AG-1 Section BA.

10.2.1.2 Functional description of the electrical operation of the package. [Section 9.1.1, 24590-WTP-3PS-EKP0-T0001, Rev 3]

10.2.1.3 Material list with specific model number, manufacturer and catalogue cut sheets shall be submitted as part of the product data. [Section 9.1.6, 24590-WTP-3PS-EKP0-T0001, Rev 3

10.2.1.4 Supplier shall provide a list of recommended spare parts as follows: [Section 9.1.8.1, 24590-WTP-3PS-EKP0-T0001, Rev 3]

10.2.1.4.1 Startup/warranty spare parts - are those parts that may be required at any time during equipment installation, startup, testing and unit operation through the warranty period.

10.2.1.4.2 Operational spare parts - are those parts that required replacement at regular intervals to maintain continuous operation of the supplied equipment and/or system.

10.2.1.4.3 Capital spare parts - are major parts or equipment that provide reliable equipment operation throughout the plant life and having a significant lead time for manufacturer and delivery.

10.2.1.4.4 The spare parts list shall include pricing and delivery information valid for one year after delivery of the equipment. [Section 9.1.8.2, 24590-WTP-3PS-EKP0-T0001, Rev 3]

10.2.1.5 Instrument installation details shall be submitted for the Buyer's review and one month prior to proceeding with instrument installations. [Section 11.2.4,24590-WTP-3PS-JQ07-T0001 Rev 2]

10.2.1.6 Supplier shall provide manufacturer's technical literature for all technical components and instrumentation provided within the Supplier's package. [Section 11.2.12, 24590-WTP-3PS-JQ07-T0001 Rev 2]

10.2.1.7 Supplier shall provide a brief description and justification for the Mean Time Between Failure figure provided on the Blower Data Sheets.

10.2.2 Drawings

Drawings shall show the following information:

10.2.2.1 The outline dimensions of blower, including outline and detail drawings for each component (motor, etc). These drawings shall reflect the "as-shipped" configuration of the equipment and instrumentation. As a minimum, interface control drawings shall contain overall dimensions of the blower and motor , materials of construction, instrumentation interfaces and equipment mounting information including bolt hole sizes and quantities of bolts required.

10.2.2.2 Mounting dimensions and information required for the design of supports and foundations, including any special assembly instructions.

10.2.2.3 Operating weights of blower assembly including motor components.

10.2.2.4 The space required for the removal of components.

10.2.2.5 The locations of access doors.

10.2.2.6 The weights of individual components.

10.2.2.7 The locations and identification of parts that are included in the parts list.

10.2.2.8 Assembly drawings providing sufficient detail to facilitate assembly of the component parts of the blower.

10.2.2.9 Overall Single line diagram showing all electrical equipment. [Section 9.1.2, 24590-WTP-3PS-EKP0-T0001, Rev 3]

10.2.2.10 Overall layout showing location of electrical items. [Section 9.1.3, 24590-WTP-3PS-EKP0-T0001, Rev 3]

10.2.2.11 Interconnection diagram and cable schedule showing details of all internal connections and Buyer external connections. [Section 9.1.4, 24590-WTP-3PS-EKP0-T0001, Rev 3]

10.2.2.12 Individual equipment schematic diagrams, wiring diagrams, general arrangement drawings, foundation details and junction/terminal box details. [Section 9.1.5, 24590-WTP-3PS-EKP0-T0001, Rev 3]

10.2.2.13 Certified outline and dimensional drawings shall show the size and location of electrical, pneumatic and service connections and information necessary to locate and mount the equipment, if it is to be mounted by the Buyer. [Section 11.2.3, 24590-WTP-3PS-JQ07-T0001 Rev 2]

10.2.2.14 The ASTM or equivalent designation for materials.

10.2.2.15 Blower performance curves at 60%, 80%, 100%, and 110% design speed at design conditions specified on the data sheets. Preliminary performance curves shall be provided prior to submitting equipments drawings. Blower performance curves including unstable operating surge region/limit.

10.2.2.16 Identify all devices with the Buyer's tag numbers, where applicable

10.2.3 Procedures

Procedures are to be submitted to Buyer for approval prior to use and shall include:

10.2.3.1 Welding procedures

10.2.3.2 Procedures for repairs of rejected items or parts.

10.2.3.3 Cleaning and coating procedures per specification 24590-WTP-3PS-AFPS-T0001 as tailored in Attachment A.

10.2.3.4 Electrical component performance test procedures

10.2.3.5 Seller's shipping preparation and storage procedures per specification 24590-WTP-3PS-G000-T0003.

10.2.3.6 Test procedures for blower performance.

10.2.3.7 Test procedures for blower housing and shaft leakage tests.

10.2.3.8 Test procedures for sound, over-speed, vibration, and mechanical running tests.

10.2.3.9 Commercial Grade Dedication Procedures and Plans per specification 24590-WTP-3PS-G000-T0019.

10.2.3.10 Software Validation and Verification plan per specification 24590-WTP-3PS-G000-T0014.

10.2.3.11 Seismic compliance documentation for permission to proceed per specification 24590-WTP-3PS-SS90-T0001 or 24590-WTP-3PS-FB01-T0001 as applicable.

10.2.3.12 Environmental qualification test procedures in accordance with 24590-WTP-3PS-JQ06-T0005.

10.2.3.13 Non-Destructive Examination procedures

10.2.4 Inspection and Test Reports

10.2.4.1 Inspection and test plan for Buyer review and approval.

10.2.4.2 Records of repairs of rejected items or parts.

10.2.4.3 Welding inspection reports and welding repair reports if required.

10.2.4.4 Electrical component performance test reports

10.2.4.5 Blower housing and shaft seal leakage test reports

10.2.4.6 Blower performance test reports, including blower curves

10.2.4.7 Sound power levels

10.2.4.8 Blower wheel/shaft vibration, over-speed, and mechanical test reports

10.2.4.9 NRTL Field Evaluation Reports

10.2.4.10 Seismic Compliance documentation per specification 24590-WTP-3PS-SS90-T0001 or 24590-WTP-3PS-FB01-T0001 as applicable.

10.2.4.11 Commercial Grade Dedication Package per specification 24590-WTP-3PS-G000-T0019.

10.2.4.12 Software Validation and Verification report per specification 24590-WTP-3PS-G000-T0014.

10.2.4.13 Environmental qualification test report in accordance with 24590-WTP-3PS-JQ06-T0005.

10.2.4.14 Non-Destructive Examination reports

10.2.5 Calculations

10.2.5.1 Calculations shall be in accordance with 24590-WTP-3PS-G000-T0014, Engineering Specification for Supplier Design Analysis.

10.2.6 Manuals

Manuals and instructions shall include:

10.2.6.1 Erection and installation manuals which provide complete, detailed procedures for installing and placing equipment in initial operation. The manuals shall include all erection and installation drawings.

10.2.6.2 Operation and maintenance manuals which provide complete, detailed descriptions of components and accessories with data sheets showing design, construction and performance data for equipment. Manuals shall include drawings required for operation (duplication of drawings shall be avoided, drawings submitted to fulfill other requirements shall be referenced with Buyer provided numbering), maintenance and repair, maintenance requirements, instructions and operational troubleshooting guides. All manuals/drawings shall include OEM part numbers.

10.2.6.3 Instruction manuals shall cover all major components such as blowers, motors, controls, and instrumentation, including those purchased from a subcontractor. The Seller shall obtain such manuals and lists, and submit them to the Buyer.

10.2.6.4 The Seller shall provide instructions regarding site long and short and long term storage up to 5 years, and preparation and protection of equipment after installation and prior to operation.

10.2.6.5 Where manuals include information applicable to several components, sizes or models, non-applicable information shall be lined-out.

10.2.7 Certificates of Conformance

10.2.7.1 Seller shall certify lifting eyes or lugs and/or spreader bars are suitable for the safe, balanced lifting, and handling of the equipment.

10.2.8 Schedules

Lists and schedules shall include:

10.2.8.1 Schedule of engineering, fabrication, and testing.

10.2.8.2 Parts list, and cost for parts and items subject to deterioration and replacement. Seller to state shelf life and storage requirements for spare parts.

10.2.8.3 Schedule of maintenance and part replacements required to maintain the equipment qualification in accordance with requirements in section 6 of specifications, 24590-WTP-3PS-JQ06-T0005, Engineering Specification for Environmental Qualification of Control and Electrical Systems.

10.2.9 Materials Certificates

10.2.9.1 Material test reports of chemical and physical properties shall be provided for all stress components of the blowers, including the blower impeller and its components, blower shaft, and housings in accordance with ASME AG-1, BA-3400.

10.2.9.2 Manufacturer's Material Certificate of Conformance shall be provided for scrolls, housing side plates, inlets, support framing integral to the blower, and weld filler metal in accordance with ASME AG-1, BA-3410.

10.2.9.3 Certificates of calibration referenced to NIST traceable standards required for any calibrated instrumentation provided with the equipment.

10.2.10 Data

Data shall include:

10.2.10.1 Buyer's data sheets, completely filled out by the Seller, showing all information required to determine that the units are of the design and materials specified herein, including motor data sheets.

10.2.10.2 Buyer's equipment qualification data sheets, completely filled out by the Seller, showing all information required to determine that the units are of the design and materials specified herein, including motor data sheets.

10.2.10.3 Acoustic data report. Sound test data from similar equipment previously tested can be submitted in lieu of test for the purchased equipment.

Attachment A Tailored version of specification 24590-WTP-3PS-AFPS-T0001, Shop Applied Special Protective Coatings for Steel Items and Equipment

NOTE: Only the sections and appendices contained in this Attachment apply to the Single Stage High Integrity Centrifugal Fans and Blowers specification.

Contents

1 Scope A-4
2 General A-4
2.1 Responsibility A-4
2.2 Surfaces Not To Be Coated A-5
2.3 Definitions A-5
2.4 Safety A-6
3 Applicable Documents A-6
3.1 Codes and Standards A-6
4 Submittals A-7
5 Quality Plan A-8
5.1 General A-8
6 Materials A-8
6.1 Coating Materials A-8
6.2 Manufacturer's Standard Coating A-9
6.3 Machined-Surfaces Coating A-9
6.4 Coating Over Stainless Steel A-9
6.5 Batch Information A-10
6.6 Abrasives A-10
7 Application A-10
7.1 General A-10
7.2 Pre-Surface Preparation A-11
7.3 Surface Preparation A-11
7.4 Coating Application A-13
7.5 Remedial Work A-14
8 Inspection A-15
8.2 Surface Preparation Inspection A-17
8.3 Coating Application A-18
9 Storage, Handling and Shipping of Coating Materials A-18
9.1 Coating Materials A-18
9.2 Steel Items and Equipment A-19

10 Documentation A-20

Appendices

Appendix A Coating Materials/Coating Systems A-A-1
Appendix B Coating Manufacturer's Product Identity Certification Record A-B-1
Appendix C Surface Preparation and Coating Inspection Form A-C-1
Appendix D Manufacturer's Standard Coating Data Sheet A-D-1

1 Scope

1.1 This specification defines the minimum requirements for Special Protective Coating (SPC) materials/coating systems, surface preparation, application, and inspection of protective coatings to be shop applied. Items and surfaces to be coated shall be coated in accordance with this specification. Unless indicated otherwise in the base technical specification/material requisition or purchase order, all coats will be shop applied. Finish color shall be ANSI 70 Gray unless indicated otherwise in Section 2.0 of the Material Requisition (MR). [Section 1.1]

1.2 All Special Protective Coatings (SPC's) are designated as Commercial Grade (CM) and non-safety. [Section 1.2]

2 General

2.1 Responsibility

2.1.1 The SELLER shall supply all personnel, coating materials and all necessary surface preparation, application, inspection and other equipment as required. [Section 2.1.1]

2.1.2 The SELLER shall unload, inspect, and store all inbound steel items and equipment scheduled for coating when manufactured by others. Items found to be damaged or otherwise unsuitable for coating shall be identified and segregated for evaluation by the SELLER. [Section 2.1.2]

2.1.3 The SELLER shall store all coating materials, perform surface preparation, coating application and inspection in accordance with this specification and Buyer reviewed procedures. The coating systems and associated coating materials used shall be in accordance with Appendix A or the Material Requisition (MR) when coatings are specifically identified. [Section 2.1.3]

2.1.4 The SELLER shall perform all inspections and tests contained in this specification as necessary prior to verification by the BUYER. [Section 2.1.4]

2.1.5 The SELLER shall provide application and inspection documentation for all coating Work in accordance with this specification. [Section 2.1.5]

2.1.6 The SELLER shall provide environmental control equipment as necessary for coating application and curing. [Section 2.1.6]

2.1.7 The SELLER shall provide erection marking. Marks for color-coding of bulk materials and erection marking shall be fully compatible with the coating system specified. [Section 2.1.7]

2.1.8 The SELLER shall touch-up and repair defective or damaged coating in accordance with procedures submitted and reviewed by the BUYER. [Section 2.1.8]

2.1.9 The SELLER shall protect all coated surfaces prior to shipment and provide suitable coverings, padding and strapping to protect coated items during shipment. [Section 2.1.9]

2.1.10 The SELLER shall only use inspection equipment that is currently (in date) calibrated. [Section 2.1.10]

2.2 Surfaces Not To Be Coated

2.2.1 Hold back coating from weld areas- [Section 2.2.1]

2.2.1.1 Three (3) to Four (4) inches for **shop** welds when using epoxy or other types of organic coatings. [Section 2.2.1.2]

2.2.1.2 Note - The above coating hold back dimensions are only for items previously coated prior to welding. These coating hold back dimensions do not apply to shop welds that will be coated after welding is completed. This Section of the shop coating spec does not have anything to do with coating hold back requirements associated with visual inspection of welds during hydro testing. Coating hold back requirements associated with weld inspection must come from the prevailing code. [Section 2.2.1.4]

2.2.1.3 If the coating hold back at field welds is greater than 50% of the surface area of the item then the item does not required shop coating, however the items shall be blasted to remove all mill scale. [Section 2.2.1.5]

2.2.1.4 The coating hold back shall be sufficient to expose the entire shop weld for visual inspection on items fabricated prior to coating. [Section 2.2.1.6]

2.2.2 Name and instruction plates, etc. [Section 2.2.2]

2.2.3 Rubber or similar nonmetallic parts. [Section 2.2.3]

2.2.4 Machined surfaces. [Section 2.2.4]

2.2.5 Non-Ferrous metals unless otherwise specified. [Section 2.2.5]

2.2.6 Stainless Steel surfaces, unless specifically required by the BUYER (areas where stainless steel is welded to carbon steel the coating overlap onto the stainless steel shall be approximately 1" or as otherwise specified.) [Section 2.2.6]

2.3 Definitions

2.3.1 Batch- A quantity of coating made in one production run. A unique batch number is assigned for each production run of the coating material, curing agent, zinc powders, fillers and thinner. [Section 2.3.1]

2.3.2 Dry Film Thickness (DFT)- The thickness of an applied coating, once dry or cured. Usually expressed in mils (each mil is 1/1000 inch). [Section 2.3.3]

2.3.3 Fish Eyes (cratering)- Formation of holes or visible depression in the coating film. Usually from a contaminated particle on the surface prior to applying the coating. [Section 2.3.4]

2.3.4 Holiday- A Pinhole, skip, discontinuity, or void in the applied coating film. [Section 2.3.5]

2.3.5 Mfg. Std. Coating- A manufacturers standard coatings system applied to off the shelf items or standard line items of routine manufacture that are not specifically manufactured for the WTP project. [Section 2.3.7]

2.3.6 NIST- National Institute of Standards and Technology. [Section 2.3.8]

2.3.7 Pinholes- Minute holes visible in the applied coating without magnification that appears to penetrate one or more layers of the coating film. [Section 2.3.10]

2.3.8 Profile- The surface roughness resulting from surface preparation by abrasive blasting or other authorized methods. (Refer to Section 7.3.6). [Section 2.3.11]

2.3.9 Sag- The running of freshly applied coating on a vertical surface due to being applied too thick. (Same definition for runs and drips) [Section 2.3.13]

2.3.10 Training and Certification- Training shall include an understanding of the specification, work procedures and manufacturers published instructions. Certification shall include a documented performance test demonstrating quality work verifiable by the BUYER. (Refer to Sections 4.5, 5.1.6, 7.1.2, and 8.1.1.1) [Section 2.3.16]

2.4 Safety

2.4.1 The SELLER shall comply fully with OSHA Hazard Communication Standard 29CFR 1910. Material Safety Data Sheets (MSDS) for all materials, including thinners and cleaning solvents, shall be obtained from the materials manufacturer and upon request made available, at the place and time of Work, for review. [Section 2.4.2]

2.4.2 The Volatile Organic Compound (VOC) content of all materials shall comply with Federal, State and Local or other Regulatory requirements. [Section 2.4.3]

3 Applicable Documents

3.1 Codes and Standards

3.1.1 American Society for Testing and Materials (ASTM)

ASTM E337- R96; 02	Test for Relative Humidity by Wet-and-Dry Bulb Psychrometer
ASTM D3276- 00; 05	Standard Guide for Painting Inspectors (Metal Substrates)
ASTM D4285- 99	Test Method for Indicating Oil or Water in Compressed Air
ASTM D4417- 99; 03	Field Measurement of Surface Profile of Blast Cleaned Steel
ASTM D4537- 96; 04; 04a	Standard Guide for Establishing Procedures to Qualify and Certify Inspection Personnel for Coating Work Inspectors in Nuclear Facilities.
ASTM D4940- 98; 03	Test for Conductimetric Analysis of Water Soluble Ionic Contaminants of Blasting Abrasives
ASTM D5064-01	Standard Practice for Conducting a Patch Test to Assess Coating Compatibility

3.1.2 The Society for Protective Coatings (SSPC)

SSPC-AB1 6/1/97;7/1/07	Mineral Slag Abrasive
SSPC-PA2 5/1/04	Measurement of Dry Paint Thickness with Magnetic Gages
SSPC-SP1 11/1/82;11/1/04	Solvent Cleaning

SSPC-SP10 11/1/04 Near White Metal Blast Cleaning
SSPC-SP11 11/1/87; 11/1/04 Power Tool Cleaning to Bare Metal
SSPC-VIS 1 6/1/02; 11/1/04 Guide and Reference Photographs for Steel Surfaces Prepared by Dry Abrasive Blast Cleaning

3.1.3 Occupational Safety and Health Administration (OSHA)

OSHA 29 CFR 1910 Occupational Safety and Health Standards

4 Submittals

4.1 SELLER shall prepare detailed written procedures for material receiving, marking, storage, handling, surface preparation, environmental control, application, curing, inspection, testing, touch-up/repair, application personnel qualification, inspector qualification, (G321- E , category 28.0) and proposed documentation forms as described within this specification. The final procedure and documentation forms shall be submitted and reviewed with BUYER's permission to proceed prior to the start of coating Work. (G321-E category 15.0). Submittal requirements for manufacturers standard coating are found in Section 6.2. [Section 4.1, 24590-WTP-3PS-AFPS-T0001, rev 4]

4.2 The SELLER shall identify the specific products by manufacturer and catalog number and shall submit the coating manufacturer's latest published product data sheet, application instructions and Material Safety Data Sheets (MSDS). Conflicts, if any, between the SELLER's normal procedures, the coating manufacturer's recommendations, and this specification shall be brought to the attention of the BUYER for resolution and written permission to proceed. (G321-E category 11.0) [Section 4.4, 24590-WTP-3PS-AFPS-T0001, rev 4]

4.3 The SELLER shall submit original or copies of original Coating Manufacturer's Product Identity Certification Records for each and every batch of coating material used on the WTP project (Appendix B)(Refer to G321V category 13.0) [Section 4.5, 24590-WTP-3PS-AFPS-T0001, rev 4]

4.4 The SELLER shall submit a daily inspection record as part of the Work procedures that includes all the elements provided in Appendix C as a minimum. An entry for Wet Bulb is not required when the accepted device used to measure humidity and dew point does not require a wet bulb. (Refer to Section 8.1.9 and 10.2) (G321V category 15.0)
[Section 4.6, 24590-WTP-3PS-AFPS-T0001, rev 4]

4.5 The SELLER shall provide a personnel training and certification plan for applicators and inspectors. (Refer to Section 2.3.10, 5.1.6, 7.1.2, and 8.1.1.1).
[Section 4.8, 24590-WTP-3PS-AFPS-T0001, rev 4]

5 Quality Plan

5.1 General

5.1.1 The SELLER shall control the quality of items and services to meet the requirements of this specification, applicable codes and standards, associated procurement documents, referenced herein. The SELLER shall prepare and maintain documentation to provide evidence of compliance with reviewed procedures and this specification. A copy of the coating inspection documentation shall be included in the shipping documentation. [Section 5.1.1]

5.1.2 The SELLER, including any lower-tier organizations engaged by him, shall be subject to surveillance inspection by the BUYER representative until completion or termination of the procurement. This surveillance inspection does not relieve the SELLER from the responsibility for conformance to the requirements of procurement documents, this specification and authorized procedures. [Section 5.1.2]

5.1.3 The BUYER representative shall be provided with a work activity schedule and shall be notified of all required inspection points prior to the scheduled date for coating activities (Refer to MR Section 5.0). [Section 5.1.4]

5.1.4 If the SELLER's proposed Work plan or procedures differ from the requirements of this specification, the SELLER shall specifically identify and explain all differences in writing and submit them to the BUYER for review and verification prior to the start of Work (e.g., Supplier Deviation Disposition Request- SDDR). [Section 5.1.5]

5.1.5 All pre-established witness and hold points shall be witnessed by the BUYER unless a written waiver has been issued. [Section 5.1.6]

5.1.6 The SELLER's coating inspectors shall have previous experience in coating inspection and shall receive documented training in the specific project coating requirements, ASTM standards and other relevant standards including the reviewed work procedures. All coating inspectors working on steel items or equipment shall be trained and qualified meeting the requirements of Section 8.1.1.1. [Section 5.1.7]

6 Materials

6.1 Coating Materials

6.1.1 Coating materials including the primer, intermediate and finish coat on a given item, shall all be from the same manufacturer. One exception to this rule is when upgrading a Manufacturer's Standard (Mfg. Std.) coating using a compatible epoxy tie-coat and suitable topcoat coating system (refer to Section 6.2). [Section 6.1.2]

6.1.2 Appendix A tables contain the specified Special Protective Coatings for the WTP project. Appendix A contains the generic coating systems and approved coating materials. [Section 6.1.3]

6.1.3 Repair materials shall be the same as those originally used. Repair materials shall be in pre-measured units, and only complete kits shall be mixed. Splitting or breaking down pre-measured units of multi-component coating materials may be considered if the SELLER prepares a procedure that requires accurate measurement of all materials and Seller's QC inspector monitoring/verification of each and every mix. This procedure must be submitted to the BUYER for review and permission to proceed. [Section 6.1.4]

6.2 Manufacturer's Standard Coating

6.2.1 Components and equipment which are normally mass-produced, inventoried, and supplied from stock generally have been coated with the Manufacturer's Standard Coating (Mfg. Std.) system. Included are small valves, pumps and rotating equipment, filters and electrical equipment such as switchgear, control panels, instrumentation, motors, transformers and electrical enclosures. Items and equipment which are specifically fabricated for the WTP project shall be coated per this specification unless the item is shown to be too delicate to properly coat per the specific requirements contained in the MR. [Section 6.2.1]

6.2.1.1 The SELLER may submit an alternate coating to the specified or Mfg. Std. System, by identifying the coating materials, surface preparation, application and inspection on Appendix D including the coating material's latest published technical data sheet and MSDS, to the BUYER for review and permission to proceed. [Section 6.2.1.1]

6.2.1.2 All Mfg. Std. Coatings must be identified on an Appendix D and submitted to the BUYER along with technical data sheets and MSDS'. A small, easily replaceable item where coating touch-up is not practical (e.g., very small, too delicate, low cost and easily replaceable) and can only be purchased with the manufacturer's standard coating, an Appendix D Manufacturer's Standard Coating Data Sheet is not required. [Section 6.2.1.2]

6.3 Machined-Surfaces Coating

6.3.1 Machined surfaces not specified to be coated with a specific coating system shall be protected with a solvent cutback asphalt temporary preservative (Daubert Chemical Tectyl 891, EF Houghton Chemical Rust Veto 342 or authorized equivalent). Temporary preservative applied to carbon steel that is overlapped onto stainless steel must meet the same chemical requirements as listed in Section 6.4. All equivalents must be identified on an Appendix D form and submitted along with the manufacturer's latest published data sheet and MSDS for review and permission to proceed by the BUYER. [Section 6.3.1]

6.4 Coating Over Stainless Steel

6.4.1 All coating materials, thinners, solvents and cleaning materials used on SS shall be shown to comply with the following requirements:[Section 6.4.1]

Leachable halogen content shall not exceed 200 ppm

The total sulfur content shall not exceed 400 ppm

The total of low melting point metals such as lead, zinc, copper, tin, antimony and mercury shall not exceed one (1) percent. Of this, mercury should not exceed 50 ppm. These low melting metals shall not be intentionally added during the manufacture of the coating.

6.4.2 Sherwin Williams Macropoxy 646 and Carboline Carboguard 890 have been tested and meet the requirements above. Only these materials are approved for direct contact with stainless steel.

6.5 Batch Information

6.5.1 Each container of coating material used by the SELLER shall be marked with the following: [Section 6.5.1]

- The manufacturer's name
- The product designation
- Batch or lot number
- Location and date of manufacture
- The shelf life expiration date

6.6 Abrasives

6.6.1 Abrasives for blast cleaning shall be clean, free of oil or contaminants, and dry. The particle size shall be capable of producing the specified surface profile. Mineral and slag abrasives shall meet the requirements of SSPC AB-1. The first batch/lot of bulk, non-packaged, abrasives shall be tested for water-soluble contaminants and the conductivity shall not exceed 500 micro siemens/cm when tested in accordance with ASTM D4940. As an alternate, a chloride ion test kit, such as the Chlor*Test "A" manufactures by Chlor Rid International Inc, or BUYER accepted equal may be used. The maximum allowable chloride level is 200ppm. [Section 6.6.1]

6.6.2 When using reclaimed steel grit/shot abrasive, the particle size shall be capable of producing the specified angular surface profile (minimum 50% steel grit in original mix and all adds shall be 100% steel grit). Reclaimed abrasives already in use and the first batch/lot of new abrasive shall be tested for water-soluble contaminants and conductivity. Conductivity shall not exceed 500 micro siemens/cm when tested in accordance with ASTM D 4940. As an alternate, a chloride ion test kit, such as the Chlor*Test "A" manufactures by Chlor Rid International Inc, or BUYER accepted equal may be used. The maximum allowable chloride level is 200ppm. [Section 6.6.2]

7 Application

7.1 General

7.1.1 It shall be the SELLER's responsibility to stop the surface preparation and coating at any time when conditions exist that might adversely affect the quality. The BUYER representative may reject any prepared or coated surfaces not in compliance with this specification. [Section 7.1.1]

7.1.2 All painters (e.g., surface preparation personnel and paint/coating material application personnel), shall be individually qualified and certified in accordance with the SELLER's written description that includes classroom training and capability demonstration using the WTP project specification, and the SELLER's procedures as reviewed by the BUYER. [Section 7.1.2]

7.1.3 Care shall be taken to avoid blasting or grinding away critical markings, which identify welders, joint numbers, or other markings, which identify the item. Where such data appears in the area to be coated, it shall be protected. SELLER's are responsible for assuring their sub-suppliers are instructed concerning these requirements. [Section 7.1.3]

7.2 Pre-Surface Preparation

7.2.1 Prior to mechanical cleaning, the surfaces to be coated shall be cleaned in accordance with SSPC SP1 to remove oil, grease, dirt, and other foreign matter that can interfere with the proper bonding of the coating. Any remaining sharp edges, weld spatter, or burrs found after the start of coating Work shall be completely removed by grinding or other means. Pneumatic tools shall not be used unless they are fitted with effective oil and water traps on the exhaust air. If the steel items or equipment was shipped or stored so that the surface could have been contaminated with soluble salts (e.g., above deck ship transport, truck transport on dirt roads close to ocean, storage), the area shall be pressure water washed (2,000-5000psi) with demineralized water to remove as much soluble salt contamination as possible prior to abrasive blasting. [Section 7.2.1]

7.3 Surface Preparation

7.3.1 Prior to the start of Work, the SELLER shall examine all surfaces to be coated to determine their acceptability for the specified coating application. If the surfaces are found to be unacceptable, the SELLER shall return the surface to an acceptable condition. Coating work shall not commence until corrective action has been taken. Commencement of coating work prior to the taking of correctable action shall preclude any subsequent claim by the SELLER. The BUYER may require corrective action at the SELLER's expense. [Section 7.3.1]

7.3.2 Prior to blast cleaning items to be coated, they shall be visibly dry with the surface temperature of at least 5°F above the dew point. When using automatic blasting equipment that recycles steel abrasive, the steel need only be visibly dry. [Section 7.3.2]

7.3.3 All surfaces to be coated shall be pre-cleaned per SSPC SP 1 where oil, grease, and other contaminants are present. [Section 7.3.3]

7.3.4 Abrasives shall meet the requirements of Section 6.6. [Section 7.3.4]

7.3.5 Surfaces to be coated shall be blast cleaned in accordance with the surface preparation requirements specified in SSPC SP10. Where abrasive blasting will damage the items or is impractical, SSPC-SP11 Power Tool Cleaning to bare Metal may be substituted only in limited areas and only with BUYER's permission to proceed (e.g. SDDR). [Section 7.3.5]

7.3.6 Abrasive blasting carbon steel shall result in an angular surface profile 1.5 to 3.0 mils deep as measured using a profile comparator or Testex Press-O-Film replication tape, in accordance with ASTM D4417 method A or C. [Section 7.3.6]

7.3.6.1 Methods established for measuring surface profile produced by abrasive blast cleaning are not valid or conclusive on surfaces that are excessively rough prior to blast cleaning (e.g. rough mill finishes, heavy rusting or pitting [SSPC-VIS 1 Condition D or rougher], cast surfaces, weld beads or physically damaged surfaces). Therefore, to accurately determine the surface profile produced by blast cleaning, profile measurements shall be taken in areas

exhibiting the least surface roughness. For example, SSPC-VIS 1 pre-blast Conditions A, B or C typically result in a blasted surface that is acceptable for surface profile measurement. [Section 7.3.6.1]

7.3.6.2 If excessive surface roughness covers the entire item, then a smooth, clean ASTM A36 steel plate (e.g., SSPC-VIS 1 Condition A, B or C), approximately 6" square and at least $^1/_4$" thick, shall be blasted using the identical abrasive, pressure, nozzle, blasting equipment and method used on the actual item. The surface profile measured on the smooth plate is regarded as an accurate measurement of the profile produced by that blasting method, and shall be recorded as the surface profile for the actual item. A new plate shall be blasted and measured at a frequency accepted in the SELLER'S procedures (refer to Section 8.1.9). [Section 7.3.6.2]

7.3.7 Recycled abrasive blasting using a steel grit/shot mix is acceptable. The maximum amount of shot in the original mix shall be 50%. All additions of abrasive shall be steel grit. The stabilized working mix shall be maintained by frequent small additions of new grit abrasive commensurate with consumption. Infrequent large additions of grit shall be avoided. Steel grit or shot is not acceptable for use on stainless steel surfaces. [Section 7.3.7]

7.3.7.1 The working abrasive mix shall be maintained clean of contaminants by continuous effective operations of cleaning machine scalping and air wash separators. Reclaimed grit used for abrasive cleaning shall be tested for the presence of oil/grease by immersing a sample in clean tap water and checking for oil flotation. Tests shall be made at the start of blasting and at a minimum of every four (4) hours thereafter. If oil is evident, the contaminated abrasive shall be cleaned or replaced. All surfaces blasted since the last successful test shall be completely cleaned of contamination then re-blasted using clean abrasive. [Section 7.3.7.1]

7.3.8 Blast cleaning shall not be performed in the immediate area where coating or curing of coated surfaces is in progress. All surfaces and equipment, which are not to be coated, shall be suitably protected from blast cleaning. [Section 7.3.8]

7.3.9 Burrs, slivers, scabs, lamination, and weld spatter which become visible after blasting shall be removed. The tools and manner employed to remove weld defects and sharp edges shall not burnish or destroy the profile. If the profile or roughness is reduced, it shall be re-blasted to produce the profile and roughness as required. The exhaust of pneumatic grinders shall not impinge on the cleaned surface. If the surface becomes contaminated, it shall be cleaned of contamination and re- blasted. Carbon steel tools or implements specifically employed for coating surface preparation shall not be used on stainless steel surfaces. [Section 7.3.9]

7.3.10 If visible rust occurs or if the cleaned surface becomes wet or otherwise contaminated, these surfaces shall be re-cleaned to the degree specified. Cleaned surfaces remaining uncoated overnight shall be visually reinspected 100% for required cleanliness prior to coating or shall be re-cleaned to the specified cleanliness prior to applying the coating. [Section 7.3.10]

7.3.11 After surface preparation is complete and before coating, pressurized air or a vacuum shall be used to remove all dust and abrasive residue. The air shall be clean and dry as verified in accordance with Section 8.1.6 so as not to contaminate the prepared surface. [Section 7.3.11]

7.3.12 Machined surfaces shall be wiped with clean solvent before the application of coating and shall be protected from damage due to blasting and coating operations. [Section 7.3.12]

7.3.13 Machined portions of pipe flanges and other machined mating faces which will not be exposed after final fit-up shall be masked or covered and protected from surface preparation and coating activities. The remaining part of the flange face and exposed surfaces shall then be blasted and coated (bolt holes need only to be sufficiently coated for visible coverage. No dry film thickness required.). [Section 7.3.13]

7.3.14 Equipment shall have all openings plugged, masked, and/or blinded sufficiently to protect internals before abrasive blasting. After the coating operation is complete all internals shall be blown clean and/or vacuumed to remove any dust or abrasive blast media that may have entered the coated equipment. [Section 7.3.14]

7.3.15 The abrasive mixture and the compressed air shall be clean, dry and oil free. Moisture traps, in addition to oil and water extractors mounted on the compressor, shall be used in compressed air lines to remove oil and moisture from air close to the point of use. (Refer to Section 7.3.7.1 and 8.1.6)[Section 7.3.15]

7.3.16 All valves, valve actuators and motors that will be shop coated shall be blasted and coated prior to assembly. Areas of assembled items that are not coated prior to assembly and subject to damage during blasting must be carefully protected from abrasive damage or abrasive contamination. [Section 7.3.16]

7.4 Coating Application

7.4.1 The coating shall be applied in accordance with reviewed procedures (refer to Section 4.1). The coating manufacturer's recommendations for the application temperature and the curing temperature and times (between coats and after last coat) of the specified material shall become a part of this specification. Application and curing temperatures above or below the limits allowed by this specification (Refer to Section 7.4.4) shall be submitted to the BUYER for review (e.g., SDDR). [Section 7.4.1]

7.4.2 Coatings shall be applied using properly sized and type of equipment for the size & complexity of the item being coated. The equipment shall be clean with all components in good working order. [Section 7.4.2]

7.4.3 Surfaces that will become inaccessible shall be coated before assembly, tagging, fitting, or welding. Inaccessible surfaces includes lap joint flanges, nozzle necks, lap joint stub ends, lap rings, bolt holes, flanges for exchangers and vessels, and welded joints that become inaccessible after assembly. [Section 7.4.3]

7.4.4 Coatings shall be applied only when the surface to be coated is clean and dry. The substrate temperature shall be a minimum of 5°F above the dew point during coating application and until the applied coating is no longer moisture sensitive per the coating manufacturer's published data or written recommendations. The substrate and air temperature during coating application and curing shall be a minimum of 50°F (Inorganic zinc primers 40°F) and a maximum of 110°F. The relative humidity during coating application shall not exceed 85 percent. Measure humidity in accordance with ASTM E 337 (Sections 1.0-19.0) or using an alternate method reviewed and accepted by the BUYER. Deviations from the above listed minimum and maximum substrate/air temperature and humidity limits may be allowed when in accordance with the coating manufacturer's published or written recommendations and are accepted by the BUYER. The one firm limit is that the minimum substrate or air temperature

shall not be less than 35 °F regardless of the coating manufacturer's published or written recommendations. [Section 7.4.4]

7.4.5 The SELLER shall record all batch numbers for each coating component used along with other information necessary for the BUYER to relate the batch to the item for which it was applied. (Refer to Appendix C)[Section 7.4.5]

7.4.6 All coatings shall be thoroughly mixed until they are smooth and free from lumps, then strained through a screen of at least 30 mesh. Zinc filled coatings shall be continuously agitated from the time initially mixed and while being applied. Other coating materials shall be mixed in accordance with the coating manufacturer's published recommendations. All multi-component coating materials shall be in pre-measured units. Splitting or breaking down pre-measured units is not permitted. See Section 6.1.3 for requirements for mixing repair materials. [Section 7.4.6]

7.4.7 Alternating coats shall have a visible color difference to insure full coverage over previous coats. Touch-up of individual small spots < 6 sq. in, do not require a visible color difference when individually marked for repair and the mark remains in place until the repair is accepted. [Section 7.4.7]

7.4.8 Dry film thickness of each coating shall be in accordance with Appendix A/Table 1 Acceptable Coating Materials or as specified in the MR. (Refer to Section 8.3.2 & 8.3.3). [Section 7.4.8]

7.4.9 Relative to the ambient and surface temperatures the minimum and maximum drying times between coats shall be in strict accordance with the coating manufacturer's latest published technical data sheets. [Section 7.4.9]

7.4.10 Runs, sags, voids, drips, overspray, loss of adhesion, bubbling, peeling, or inadequate cure are not permitted. Where possible, defects shall be corrected as detected during application of the coating. [Section 7.4.10]

7.4.11 Spray equipment, brushes and rollers shall be cleaned using only manufacturer recommended solvents/cleaners. [Section 7.4.11]

7.5 Remedial Work

7.5.1 The completed coating on each item shall have the correct dry film thickness and shall be free of damage and visible defects. [Section 7.5.1]

7.5.2 Repair of Dry Film Thickness (DFT) deficiencies
[Section 7.5.2]

7.5.2.1 Defects such as runs, sags, overspray and embedded particles shall be corrected by sanding to remove the defect. When the defects are in the finish coat, all areas sanded must be overcoated with the finish coat. If the DFT of primer or intermediate coat is reduced to less than the specified minimum, the area shall be abraded with 80 grit sand paper or flapper wheel and an additional layer of coating shall be applied until sufficient thickness is achieved. If noticed during application, the sags or runs may be brushed out. [Section 7.5.2.1]

7.5.3 Repair of Damage
[Section 7.5.3]

7.5.3.1 All damaged and loosely adhering coating shall be removed and the surface thoroughly cleaned using 80 grit sanding disc, 80-grit flapper wheel or 3M Clean-N-Strip. Edges of the breaks shall be feathered and the resulting surfaces shall be roughened. The designated number of prime and finish coats shall be applied. [Section 7.5.3.1]

7.5.4 Loss of adhesion, delamination blisters, bubbling and fish eyes in the applied coating require the coating to be removed and reapplied in accordance with this specification. [Section 7.5.4]

8 Inspection

8.1.1 The SELLER shall have the full responsibility for the coating application quality in accordance with this specification and shall be responsible for stopping Work activities when conditions develop that could adversely affect the quality of the completed work. All Work is subject to the BUYER's inspection surveillance. [Section 8.1.1]

8.1.1.1 All coating Work inspection personnel shall be trained, qualified and certified in accordance with the SELLER's reviewed procedures. The inspectors shall meet or exceed the minimum capability requirements for a Level I coatings inspector as described in ASTM D4537 Section 6.2. The SELLER's inspector training, qualification and certification procedures and plan shall include classroom training on the WTP project specification, and the SELLER's reviewed procedures using the guidelines provided in ASTM D5498. The SELLER's inspector must demonstrate his/her capability of using the inspection equipment and performing all the required inspections. Additional coating work inspection guidance is found in ASTM D3276 and ASTM D6237 which may also be used in developing procedures for training and certifying coating work inspectors. [Section 8.1.1.1]

8.1.2 The BUYER representative shall be the final authority on the specification compliance for surface preparation and material application. Any coating, which in the BUYER representative's judgment, has not been applied in conformance with this specification, shall be rejected. [Section 8.1.2]

8.1.3 The BUYER representative shall have access to each part of the process and shall have the right and opportunity to witness any of the Quality Control Tests. [Section 8.1.3]

8.1.4 The SELLER shall furnish the necessary testing and inspection instruments, properly calibrated and maintained. If equipment is suspected of being out of calibration, it shall be re-calibrated and certificates made available for verification to the BUYER. Such equipment shall be available for use by the BUYER in conducting surveillance of the work. Calibration of testing and Inspection instruments shall be traceable to NIST or Buyer authorized alternative standards. [Section 8.1.4]

8.1.5 The SELLER shall halt the coating Work and make corrections to the procedures, as necessary to correct repetitive faults found in the Work. [Section 8.1.5]

8.1.6 Prior to using compressed air, the quality of the air downstream of the separator shall be tested in accordance with the requirements of ASTM D4285 by blowing the air onto a clean white

blotter or cloth for two (2) minutes at a distance of no more than twelve (12) inches to check for any contamination, oil, or moisture. "This test shall be performed at the start of work and every 4 hours thereafter". The test shall also be made after any interruption of the air compressor operation or as required by the BUYER. The air shall be used only if the test indicates no visible contamination, oil, or moisture. If contaminants are evident, the equipment deficiencies shall be corrected and the air stream shall be re-tested. Moisture separators shall be bled continuously. All lines shall be tested individually prior to use. Surfaces determined to have been blown down or blasted with contaminated air shall be cleaned of all contamination then re-blasted with clean air and abrasive. Coatings determined to have been applied using contaminated air shall be removed and reapplied using clean air. [Section 8.1.6]

8.1.7 Inspection points shall be established as follows:
[Section 8.1.7]

- Prior to the start of Work.
- Immediately following the surface preparation
- Immediately prior to the coating application
- Following the application of each coat
- Following the curing of the coating
- Final inspection and sign-off, in accordance with the project requirements

8.1.8 Any defects disclosed by inspection shall be re-inspected after correction.
[Section 8.1.8]

8.1.9 The SELLER shall keep the records indicated below, and submit these records to the BUYER (refer to Section 4.4 and Appendix C). The following lists the frequencies: [Section 8.1.9]

Coating/Inspection Step		Required Frequency
1.	Pre-Surface Prep	100% visual on Pre- Surface
	Surface Preparation	100% on Surface Prep/Cleanliness
	Profile	Profile first item of each type per shift and every 20 items thereafter or other frequency as BUYER accepted in SELLER's procedures.
2.	Environmental/Air Quality	At the start of each work and every 4 hours thereafter or more often during changing conditions.
3.	Recirculated Abrasive	At the start of work and every 4 hours thereafter
4.	Thickness Per SSPC PA2	On large items five (5) spot reading per 100 sq.ft. On items < 100 sq.ft. four (4) spot readings On items less than 4" (valves, fittings, components, etc) two (2) spot readings, For repair spots < 6 sq. inches and > 1 sq. inch. Two (2) spot readings For repair spots < 1 sq. inch one (1) spot reading For small chips/nicks/scratches and pinhole size repair spots need only a visual. For complex surfaces such as structural steel (steel beams) the frequency of dry film thickness readings shall be in accordance with SSPC-PA2 Appendix 3 section A3.4.1 excluding any readings on the flange toes. In accordance with figure A.3 "The Surface of a Steel Beam" the following locations are acceptable for the test readings- 1, 3, 4, 5, 7, 9, 10 and 11; and the following locations are excluded from test readings- 2, 6, 8, 12. For beams less than 20'-0" two (2) sets of 8 spot readings shall be taken. For beams 20'-0" thru 60'-0" three (3) sets of 8 spot readings shall be taken.
5.	Visual on Applied Coating.	100% of all items

8.2 Surface Preparation Inspection

8.2.1 Verify environmental conditions and compressed air quality (refer to Section 7.3.2, 8.1.6). [Section 8.2.1]

8.2.2 Verify recirculated grit is grease and oil free (refer to Section 7.3.7). [Section 8.2.2]

8.2.3 Verify surface cleanliness and profile (refer to Sections 7.3.5, 7.3.6 and 8.1.9). [Section 8.2.3]

8.2.4 Grease free chalk shall be used to mark local areas, which do not meet the specified requirements (e.g., soapstone and crayons are not acceptable). [Section 8.2.4]

8.3 Coating Application

8.3.1 Environmental conditions and compressed air quality shall be verified per Sections 7.3.2, 7.4.4, 8.1.6 and 8.1.9. [Section 8.3.1]

8.3.2 Dry coating thickness (DFT) shall be measured with a magnetic film thickness gage such as an Elektro-Physik "Mikrotest" or Positector 2000, Positector 6000 or BUYER authorized equal in accordance with SSPC PA2. The number and location of dry film thickness readings shall be in accordance with section 8.1.9.4. [Section 8.3.2]

8.3.2.1 The gage shall have an appropriate range that is suitable to measure the thickness expected and record calibration accuracy in accordance with SSPC PA 2 at the start of work, against certified coating thickness calibration standards for non-magnetic coating of steel, traceable to NIST or BUYER authorized alternative standards. The calibration standards shall be in date, and 1.5 mil to 20.0 mil range, unless otherwise specified. [Section 8.3.2.1]

8.3.3 Any surface with a measured thickness outside of the limits described in Section 7.4.8 shall be rejected. These areas shall be reworked or re-cleaned and re-coated at the SELLER's expense. The average of the required number of readings shall be within the specified dry film thickness range. Any of the required spot readings may be as low as 80% of the minimum specified or 120% of the maximum specified as long as the average of all the readings is within the specified range. An individual spot reading that conforms to this criteria conforms to the specified dry film thickness. [Section 8.3.3]

9 Storage, Handling and Shipping of Coating Materials

9.1 Coating Materials

9.1.1 Coating materials shall not be stored in direct sunlight or exposed to inclement weather (e.g. rain, snow, sleet, freezing rain, dew point condensation, see also Section 9.1.4). Materials shall remain under cover until ready to use. [Section 9.1.1]

9.1.2 Coating material shall be delivered in manufacturer's original unopened containers. Each container shall be clearly identified with the manufacturer's name, product designation, batch number, date of manufacture and shelf life expiration date. [Section 9.1.3]

9.1.3 The maximum shelf life allowed for coating materials used on the WTP project is 24 months from the date of their manufacture. Coating materials that are older than 24 months or that exceed the manufacturer's published shelf life, if less than 24months, shall not be used and shall be placed on HOLD and segregated from other coating materials. A one-time shelf life

extension of no less than three (3) months and no more than six (6) months, may be issued by the coating manufacturer. The shelf life extension shall be based on laboratory testing of retain samples taken at the time of manufacture or by testing a sample provided from the actual coating material in question. Where testing verifies an outdated coating material still complies with its original design criteria, it is acceptable for shelf life extension. Expiration date stickers, provided by the coating manufacturer, shall be affixed to each container prior to release from HOLD. The stickers shall include the product number, batch/lot number, the new expiration date and suitably marked to indicate that they came from the coating manufacturer. A new Appendix B shall be provided by the coating manufacturer that includes the test results and specifically indicates it was provided to document shelf life extension including new expiration date. Coating materials that have not been stored or handled in accordance with Sections 9.1.4 through 9.1.7, may not have their shelf life extended. [Section 9.1.4]

9.1.4 Coating material shall be protected from moisture, direct sunlight and temperatures below 40°F or above 100°F unless otherwise allowed by the coating manufacturer's latest published instructions and verified by the BUYER. [Section 9.1.5]

9.1.5 Coating material containers where the airtight seal has been broken or any of the contents are lost, shall not be used and shall be clearly marked and segregated from useable coating material. [Section 9.1.6]

9.1.6 Coating material containers shall not be opened except for immediate use. [Section 9.1.7]

9.1.7 Unused material shall be returned to storage as soon as possible at the end of each Workday. Materials left out for more than eight (8) hours in an uncontrolled storage area (areas without environmental controls that are exposed to ambient weather) shall not be used and shall be clearly marked and segregated from useable coating material. [Section 9.1.8]

9.1.8 All required coating material certifications (Appendix B forms) for each batch of material delivered to the SELLER shall be available at the time of material receipt. Materials delivered to the shop without the required documentation shall not be used and the SELLER shall tag and place discrepant materials into a hold area clearly separated from acceptable material. Once required documentation is received or otherwise corrected and found to be acceptable, the discrepant material may then be taken off hold status and used. [Section 9.1.9]

9.2 Steel Items and Equipment

9.2.1 The SELLER shall be solely responsible for the condition of the steel items and equipment from the time they are received until they have been delivered to the BUYER. [Section 9.2.1]

9.2.2 All booms, hooks, clamps, forks, supports, and skids used in handling or storing coated items shall be designed and maintained in such a manner as to prevent any damage to the items or to the coating and shall be reviewed by the BUYER's representative. Chains and wire rope in direct contact with the coated items are not acceptable. Fabric lifting and tie down straps shall be used. [Section 9.2.2]

9.2.3 The SELLER shall inspect all items upon receipt for shipping and handling damage. Any visible damage observed at this point shall be noted on the receipt inspection report. [Section 9.2.3]

9.2.4 All coated steel items and equipment shall be stored on padded supports as necessary to preclude damage to the coating. The supports shall be properly spaced and leveled. [Section 9.2.4]

9.2.5 The BUYER's representative will have authority to stop any storage or handling activity, if there is a possibility of damage to the coating. [Section 9.2.5]

9.2.6 All steel items and equipment damaged by the SELLER shall be repaired in accordance with the specification at the SELLER's expense. Only repair procedures reviewed by the BUYER shall be used. [Section 9.2.6].

10 Documentation

10.1 The SELLER shall provide a record of all materials used (related to individual batch number- refer to Appendix B). [Section 10.1, 24590-WTP-3PS-AFPS-T0001, rev 4]

10.2 The SELLER shall provide a record of all required daily inspections (Example- Appendix C) that includes pre-surface preparation, compressed air cleanliness, environmental conditions, surface preparation and roughness, location of field repairs coated, application, visual inspection, dry film thickness, holiday testing and all touch-up/repair. This record shall include the coating and thinner materials used and the ID of the items coated to provide traceability. [Section 10.2, 24590-WTP-3PS-AFPS-T0001, rev 4]

10.3 All quality documentation shall be available for review by the BUYER representative within 24 hours from the time it is generated. [Section 10.3, 24590-WTP-3PS-AFPS-T0001, rev 4]

10.4 SELLER documentation forms or the way that the actual Work will be documented shall be provided by the SELLER as part of the procedures submittal for review by the BUYER. [Section 10.4, 24590-WTP-3PS-AFPS-T0001, rev 4]

Appendix A Coating Materials/Coating Systems

TABLE 1 - PREQUALIFIED COATING PRODUCTS

Coating Number	Generic Products	Dry Film Thickness (mils)	Carboline	Sherwin Williams
P04	High Build Epoxy	4.0-6.0	Carboguard 890	Macropoxy 646

NOTES to Table 1, Appendix A:

1) All versions of the above coating materials shall comply the WTP project VOC requirements of 3.8 lbs./gal and shall also comply with more restrictive local VOC requirements where the work is being performed. In the event the listed coating materials or acceptable versions of the listed coating materials do not meet the local VOC requirements an alternate VOC compliant material may be submitted for review.

TABLE 2 – COATING SYSTEM CODES

SYSTEM CODE	H
COAT 1	P04
COAT 2	P04
COAT 3	
COAT 4	

NOTES to Table 2, Appendix A:

1) The surface preparation for all coating systems shall be SSPC SP10 Near White Blast with a surface profile of 1.5 to 3.0 mils unless otherwise noted in this specification or the material requisition. For coating repairs, surface preparation shall be in accordance with SSPC SP11.

*1a) System Code H shall be used for all carbon steel of the mounting frame/support structure. Some overlap onto the stainless steel fan housing is acceptable, but coating of stainless steel should be avoided. Finish color shall be ANSI 70 Gray.

*1b) Motor housing may be coated with System Code H or a Manufacturer's Standard epoxy coating system consisting of two coats. The vendor shall provide a completed Appendix D, product datasheets and MSDS for each component of the Manufacturer's Standard coating material (refer to Section 6.2.1) Finish color shall be ANSI 70 Gray.

Appendix B Coating Manufacturer's Product Identity Certification Record

Project Name: _____ Coating Manufacturer: _____
Project Number: _____ Purchase Order Number: _____
Project Location: _____ Contract Number: _____
Coating Applicator: _____ Generic Coating Type: _____
Product Name: _____ Product Number: _____

(For multi-component products, provide data for all components on one or more Appendix B forms).
(Provide the standard range and actual batch values for each test)

TEST RESULTS		Component A Batch No.		Component B Batch No.	
Test	**Test Method Used**	**Standard Range**	**Batch Actual**	**Standard Range**	**Batch Actual**
Weight per Gallon					
Viscosity					
Flash Point (Typical)					
% Solids by Volume (Typical)					
Cure to recoat time @ 50F, 70F, & 90F (typical)					
Batch Size					
Date of Mfg.					
Shelf Life					
Expiration Date					

COMMENTS:

I hereby certify that the coating materials described above were manufactured with the same formulation, raw materials, production methods, and quality control standards as the coating materials originally tested and/or accepted for use at the River Protection Project-Waste Treatment Plant (WTP) Project site, located in the 200 East Area of the Hanford Site in Washington State in accordance with the requirements of WTP specification 24590-WTP-3PS-AFPS-T0001, 24590-WTP-3PS-AFPS-T0003,24590-WTP-3PS-AFPS-T0004, 24590-WTP-3PS-AFPS-T0006 and 24590-WTP-3PS-PX04-T0004.

Signed: _____ Date: _____
Title: _____ Company: _____

Appendix C Surface Preparation and Coating Inspection Form

Page __ of ___

REPORT NO:_____ DATE: _____
PROJECT:_____ DAY: M T W T F S S
SUBCONTRACTOR/SELLER:_____ SHIFT: _____
EQUIPMENT/AREA:_____ INSPECTOR: _____
SUBSTRATE: STEEL/CONCRETE/OTHER-_____ COATING SPEC NO/REV:_____
ENVIRONMENTAL CONDITIONS:

WORK ACTIVITY						
TIME						
DRY BULB TEMP. °F						
WET BULB TEMP. °F						
RH %						
DEW POINT °F						
SURFACE TEMP. °F						
BLOTTER TEST						

PRE-SURFACE PREPARATION:
SP-1:_____ MASKING/PROTECTION:_____ SURFACE DEFECTS:_____

SURFACE PREPARATION:
METHOD:_____ ABRASIVE TYPE/SIZE/STORAGE:_____
CLEANLINESS SPEC:_____ ACTUAL:_____PROFILE SPEC:_____ ACTUAL:_____
EQUIPMENT:_____

COATING MATERIALS & MIXING:
PRODUCT(S)_____
BATCH NO(S)/QUANTITIES/EXPIRATION DATE:_____/_____/_____
THINNERS/THINNING RATIO:_____/_____/_____
STORAGE:_____ MIXING: _____ INDUCTION TIME:_____
MATERIAL TEMPERATURE:_____ POT LIFE EXPIRATION TIME:_____
COATING/LINING APPLICATION START TIME:_____ FINISH TIME:_____
COAT: PRIMER/PRIMER T.U./SECOND/SECOND T.U./THIRD/THIRD T.U./OTHER
METHOD:_____ WFT:_____ RECOAT TIME/TEMP:_____ CURE TIME/TEMP:_____
EQUIPMENT:_____

APPLIED COATING:
VISUAL INSPECTION (FILM IMPERFECTIONS):_____
DRY FILM THICKNESS: SPEC:_____ ACTUAL:_____ METHOD:_____
HOLIDAY TEST:_____ METHOD:_____ OTHER TESTING:_____ METHOD:_____
TOUCH-UP AND REPAIR:_____ FINAL CURE:_____

COMMENTS: (*Use reverse side or attach extra pages*)

_____/_____
INSPECTOR'S SIGNATURE/DATE

1 Scope

1.1 Project Description and Location

The River Protection Project-Waste Treatment Plant (WTP) is a complex of waste treatment facilities where the Department of Energy's (DOE) Hanford site tank waste will be put into stable glass form. The WTP Contractor will design, build, and start up the WTP pretreatment and vitrification facilities for the US Department of Energy's (DOE) Office of River Protection (ORP). The waste treatment facilities will pretreat and immobilize the mixed waste both low-activity waste, (LAW) and high-level waste, (HLW) currently stored in underground storage tanks at the Hanford Site.

The Hanford Site occupies an area of about 560 square miles and is located along the Columbia River, north of the city of Richland, Washington. The WTP Facility will be constructed at the East End of the 200 East Area of the Hanford Site. Benton, Franklin, and Grant counties surround the Hanford Site.

1.2 Equipment, Material, and Services Required

Design, furnish materials, fabricate, test, and package the High Integrity Centrifugal Blowers (hereinafter called Blowers) and accessories in accordance with this specification including:

1.2.1 Blowers, each complete with electric motors, and accessories as specified here and in referenced technical specifications and data sheets attached to the Material Requisition (MR).

1.2.2 Special tools required for installation and maintenance, including accessories for lifting the motors and blowers.

1.2.3 Each blower/motor assembly shall include all components, accessories, and instruments fully assembled, wired, and skid mounted requiring only connection to the Buyer's electrical power, control systems, and ductwork.

1.2.4 Services of an erection and/or startup supervisor, if requested by Buyer.

1.3 Work by Others

1.3.1 Material unloading and storage at jobsite

1.3.2 Installation labor

1.3.3 Foundation and anchor bolts

1.3.4 Ductwork external to the unit

1.3.5 Electric power supply

1.3.6 Wiring external to the blower motor and adjustable speed drive

1.3.7 Field Testing and Inspection

1.3.8 Integrated testing with Adjustable Speed Drive

1.4 Definitions

Quality Level	Identifies the quality requirements to be applied to WTP Project's Systems, Structures and Components (SSCs), and activities based on safety classification and SSC characteristic. Identified quality levels are Q, and CM. Applicable ASME NQA-1 requirements are shown on the Supplier Quality Assurance Program Requirement data sheet attached to the MR.
Q	A quality level that includes Safety Class (SC), Safety Significant (SS) and Air Permit (AP) affecting SSCs.
Safety Class (SC)	An SSC whose preventive or mitigating function is necessary to limit radioactive material exposure to the public.
Safety Significant (SS)	An SSC whose preventive or mitigating function is a major contributor to defense-in-depth and/or worker safety.
Seismic Category	WTP Project's seismic classifications of SSC's based on their safety function. Seismic categories utilized in this specification are Seismic Category I (SC-I) and Seismic Category III (SC-III).

1.5 Abbreviations

ABMA	American Bearing Manufacturers Association
AMCA	Air Movement and Control Association, Inc.
ANSI	American National Standards Institute
ASNT	American Society for Nondestructive Testing
ASME	American Society of Mechanical Engineers
ASTM	ASTM International
AWS	American Welding Society
dBA	A-weighted decibel (unit of sound pressure level)
HELB	High Energy Line Break
IPS	International Pipe Standard
ISO	International Standards Organization
LOCA	Loss of Cooling Accident
NEMA	National Electrical Manufacturers Association
NFPA	National Fire Protection Association
OEM	Original Equipment Manufacturer
OSHA	Occupational Safety & Health Act
QA	Quality Assurance
RPP-WTP	River Protection Project-Waste Treatment Plant
RTD	Resistance Temperature Detector
SCFM	Standard Cubic Feet per Minute
SC	Safety Class
SS	Safety Significant

SSC Structure, System, or Component

1.6 Safety/Quality Classifications

The equipment supplied under this specification is safety class (SC) or safety significant (SS) and/or waste permit affecting and provides either a passive safety function or both an active mechanical and electrical safety function. The equipment provided under this specification provides the motive force for the process off-gas treatment systems. Specific safety class, quality level, and seismic category classifications for the individual blowers described in this specification are specified in blower data sheets attached to the PO.

2 Applicable Documents

The following documents form a part of this specification to the extent specified herein. In the event of conflict between the document referenced herein and the contents of this specification, Seller shall notify Buyer and obtain approval for its disposition.

2.1 Codes

2.1.1 ASME B & PVC-1995, Section IX - Qualification Standard for Welding and Brazing

2.1.2 ASME NQA-1-2000, Quality Assurance Program Requirements for Nuclear Facility Applications

2.1.3 AWS D1.1-2000, Structural Welding Code, Steel

2.1.4 AWS D1.3-98, Structural Welding Code, Sheet Steel

2.1.5 AWS D1.6-99, Structural Welding Code, Stainless Steel

2.1.6 AWS D9.1-2000, Sheet Metal Welding Code

2.1.7 AWS D14.6-96, Welding of Rotating Elements of Equipment

2.1.8 ASME PTC-10-1997, Performance Test Codes on Compressors and Exhausters

2.1.9 UBC 1997, Uniform Building Code

2.1.10 29 CFR 1910, Occupational Safety and Health Standards

2.1.11 NFPA 70-1999, National Electrical Code

2.2 Industry Standards

2.2.1 ABMA 9-1990, Load Ratings and Fatigue Life for Ball Bearings

2.2.2 ABMA 11-1990, Load Ratings and Fatigue Life for Roller Bearings

2.2.3 AMCA 99-2404-1978, Drive Arrangement for Centrifugal Fans

2.2.4 AMCA 99-2406-1983, Designations for Rotation and Discharge of Centrifugal Fans

2.2.5 AMCA 300-2005, Reverberant Room Method of Sound Testing of Fans

2.2.6 AMCA 301-1990, Method for Calculating Fan Sound Ratings From Laboratory Test Data

2.2.7 ASNT-SNT-TC-1A-2001, ANST Recommended Practice

2.2.8 ISO 3744-1995, Acoustics - Determination of Sound Power Levels of Noise Sources Using Sound Pressure - Engineering Method in an Essentially Free Field over a Reflecting Plane

2.2.9 ISO 1940-1:2003, Mechanical Vibration- Balance Quality Requirements For Rotors In A Constant (Rigid) State- Part 1: Specification And Verification Of Balance Tolerances

2.2.10 NEMA MG 1-1998, Motors and Generator

2.2.11 NEMA WC 55, Instrumentation Cables and Thermocouple Wire - ICEA S-82-552

2.2.12 NEMA WC 57, Standard for Control Cables - ICEA S-73-532

2.3 Reference Documents/Drawings

2.3.1 24590-WTP-3PS-FB01-T0001, Engineering Specification for Structural Design Loads for Seismic Category III/IV Equipment and Tanks.

2.3.2 24590-WTP-3PS-G000-T0001, General Specification for Supplier Quality Assurance Program Requirements.

2.3.3 24590-WTP-3PS-G000-T0014, Engineering Specification for Supplier Design Analysis.

2.3.4 24590-WTP-3PS-JQ06-T0005, Engineering Specification for Environmental Qualification of Control and Electrical Systems and Components

2.3.5 24590-WTP-3PS-JQ06-T0003, Engineering Specification for Seismic Qualification of Seismic I Control and Electrical Systems and Components

2.3.6 24590-WTP-3PS-MUMI-T0002, Engineering Specification for Low Voltage Induction Motors.

2.3.7 24590-WTP-3PS-SS90-T0001, Engineering Specification for Seismic Qualifications of Seismic Category I/II Equipment and Tanks.

2.3.8 24590-WTP-3PS-JQ07-T0001, Engineering Specification for Instrumentation for Package Systems (For BNI use only)

2.3.9 24590-WTP-3PS-EKP0-T0001, Engineering Specification for Instruction for Package Systems (For BNI use only)

2.3.10 24590-WTP-LIST-CON-08-0001, Restricted Materials List.

2.3.11 24590-WTP-3PS-G000-T0019, Engineering Specification for Acquisition of Commercial Items and Services for use in Safety Applications at WTP

2.3.12 24590-WTP-3PS-G000-T0003, Engineering Specification for Packaging, Handling and Storage Requirements

3 Design Requirements

3.1 General

3.1.1 Blowers shall be multi stage as specified in the Blower Data Sheets.

3.1.2 When indicated on the Blower Data Sheets, Seller shall provide and install insulation studs at factory for support of field installed 2.5 inch thick mineral fiber insulation. Studs shall be welded to exterior of blower housing.

3.2 Basic Function

3.2.1 The blowers will provide the motive force required to transport and discharge air and gaseous effluents to atmospheres, as shown in the Blower Data Sheets.

3.2.2 Design basis performance and capacity data are as listed on the Blower Data Sheets.

3.2.3 The equipment and appurtenances will be used in a plant that has design life of 40 years. The design objective for these multi-stage blowers shall be based on a useful life expectancy of 40 years with periodic maintenance as recommended by the Seller. The supplier shall provide the Mean Time Between Failure figure with a brief description and justification.

3.3 Performance

3.3.1 Multi-stage blower performance ratings are to be based on testing in accordance with ASME PTC-10-1997. Blowers shall be capable of performing at conditions shown on the Blower Data Sheets.

3.4 Lifting and Handling Requirements

3.4.1 For lifting and handling requirements, see Specification 24590-WTP-3PS-G000-T0003.

3.4.2 Seller shall provide lifting eyes or lugs to facilitate lifting and handling of the blowers. Lifting eyes or lugs shall be certified suitable for the safe, balanced lifting and handling of the equipment.

3.4.3 Metal tags that identify the maximum design load (excluding dynamic load factor) shall be provided for all lifting lugs, bails, and other lifting points.

3.4.4 Special lifting devices required to lift the motor and blower for removal or replacement shall also be furnished.

3.5 Sound Ratings

3.5.1 Multi-stage blower sound rating shall conform to AMCA 301, and be tested in conformance to AMCA 300 or ISO 3744.

3.5.2 Sound pressure level shall not exceed 85 dBA at 3-feet. Refer to Attachment A – Noise Requirements for Fans and Blowers. If sound pressure exceeds 85 dBA at 3-feet, Seller shall obtain Buyer permission to proceed in the form of a submittal stating estimated sound power level.

3.6 Design Conditions

3.6.1 Design basis performance and capacity data are as listed on the Blower Data Sheets.

3.6.2 Gas stream properties are shown on Blower Data Sheets. Materials of construction used shall be compatible with the effluent being handled, and specified on the Blower Data Sheets

3.6.3 Seller to provide a corrosion analysis based upon gas stream properties as provided on the Blower Data Sheets and provide an estimated useful life for all components.

3.7 Environmental Conditions

3.7.1 The environmental conditions for the plant rooms in which the blowers are located are listed on the Environmental Qualification Data Sheets attached to the Blower Data Sheets .

3.7.2 Blowers and motors shall be stored in accordance to requirements in section 7.1.

3.8 Mechanical Requirements

3.8.1 General

3.8.1.1 Blower housings shall be designed for both positive pressures of greater than 125% of the design operating pressure of the blower and negative pressures as specified on the Blower Data Sheets.

3.8.1.2 Blower inlets and outlets shall include allowances for the full dead weight of any flexible connections connected to the inlet and outlet.

3.8.1.3 Shaft speed shall not exceed 3600 rpm unless approved by Buyer. Tip speed of rotating assembly shall not exceed 530 fps unless approved by Buyer.

3.8.1.4 Blower housings shall be designed to prevent any internally propelled missiles from penetrating the housing.

3.8.1.5 Blower inlet and discharge connections shall be provided with temporary protective cover. These covers will be removed prior to connection to Buyer's piping and/or ductwork.

3.8.1.6 If specified on the Blower Data Sheets. braided stainless steel 316L flexible hoses with stainless steel 316L flanges shall be provided to mate with the blowers' inlet and outlet flanges. Stainless steel connectors shall have flexible core of annular corrugated stainless steel 316L tubing. Braid for the connectors shall be stainless steel 304. End fittings shall be 150# raised face stainless steel 316L flanges conforming to ANSI dimensions. Connectors shall be shipped loose for field installation.

3.8.1.7 Blower drive arrangement shall be as shown on Blower Data Sheet. Drive arrangement designations shall be per AMCA 99-2404. Designations for rotation and discharge shall be per AMCA 99-2406.

3.8.2 Access Doors and Inspection Ports

3.8.2.1 Multi-stage blowers may be provided with four - 1 inch NPT plugged inspection ports per impeller in lieu of an access door. The -inspection ports shall be located at 90 degree increments around the circumference of the housing. The bottom inspection port shall be utilized as a drain port and shall be supplied with square headed screwed drain plug.

3.8.3 Balance and Vibration Standards

3.8.3.1 Soft foot is the condition where the bottoms of the equipment "feet" or "base" are not machined flat in the same plane or parallel with their mating (or mounting) surface creating a situation where all the "feet" or "base" are not equally supporting the weight of the equipment. Each foot must be checked for soft foot. Any vertical or angular soft foot that exceeds 0.003 inches is excessive and must be corrected.

3.8.3.2 Multi-stage blowers shall be balanced to Quality Grade 2.5 of ISO 1940-1:2003. Mechanical Vibration-Balance Quality Requirements For Rotors In A Constant (Rigid) State- Part 1: Specification And Verification Of Balance Tolerances with results documented and submitted to Buyer. Additionally, multi-stage blowers shall be required to meet 1 mil displacement at 3600 rpm, filtered-in.

3.8.3.3 Multistage blower impellers shall be individually balanced and shall be individually replaceable.

3.8.4 Bearings

3.8.4.1 Multi-stage blowers shall be supplied with radial type grease-lubricated radial roller bearings with L-10 service life of not less than 100,000 hours, unless noted otherwise on the data sheets.

3.8.4.2 Multi-stage blower shall incorporate a grease slinger mounted inboard of the bearing to ensure a constant flow of lubricant to the bearing.

3.8.4.3 Seller shall provide a "heat slinger" device attached to the blower shaft external to the housing to help in dissipation of heat for bearing protection, as required. The "heat slinger" shall be equipped with safety guards.

3.8.4.4 For all blowers, it shall be possible to replace the bearings without disconnecting any piping or disassembling of the blower housing.

3.8.4.5 Seals to prevent loss of lubricant and admission of contaminants shall be provided.

3.8.4.6 Extended lube lines and fittings as required to permit lubrication during operation shall be provided.

3.8.4.7 Bearing lubricants shall be suitable for use in radiation levels as specified on the Environmental Qualification data sheet attached to the Equipment data sheet.

3.8.5 Shafts

3.8.5.1 No contact shall be made between the shaft rotor and the housings, other than through the bearings.

3.8.5.2 Shafts shall be of the material specified on the Blower Data Sheet and shall be turned, ground and polished, with machined keyways for attaching impeller and drive coupling.

3.8.5.3 Impeller(s) are to be secured to the blower shaft by locknuts or set screws.

3.8.5.4 The blower impeller and shaft shall be rated for 110% of the design rpm listed on the Blower Data Sheets.

3.8.6 Shaft Seals

3.8.6.1 Blowers shall be furnished with shaft seals as specified on the Blower Data Sheet.

3.8.6.2 Shaft seals shall be fully capable of withstanding the required test pressures before, during, and after blower operation.

3.8.6.3 As noted on the Blower Data Sheet, no process offgas out leakage at the shaft seals is allowed in systems handling potentially toxic emissions. Use of double mechanical seals and purge gas to assure zero process offgas out leakage is acceptable where needed due to positive internal system pressure.

3.8.7 Safety guards

3.8.7.1 Blowers shall be provided with bolted drive guards that cover the shaft and bearings. Provisions shall be made for insertion of tachometer and access to lube fittings without removal of drive guards.

3.8.7.2 Safety guards shall be expanded metal with an angle framework or shall be formed plate types.

3.8.7.3 The guards shall comply with the requirements of OSHA 29 CFR 1910 Subpart O - Machinery and Machine Guarding.

3.8.8 Drive requirements

The drive types shall be as indicated in the blower data sheets attached to the Material Requisition.

3.8.9 Loadings

3.8.9.1 Blower assemblies shall be self-supporting, capable of carrying the static loads of the blower components and the stress imposed during shipment, installation, and operation.

3.8.9.2 Seismic qualification of the blowers shall be in accordance with the methods and procedures described in Specification 24590-WTP-3PS-SS90-T0001, "Seismic Qualification of Seismic Category I/II Equipment and Tanks", or 24590-WTP-3PS-FB01-T0001, "Structural Design Loads for Seismic Category III/IV Equipment and Tanks".

3.8.9.3 Any additional structural loading will be indicated on the Blower Data Sheets. In-Structure Response Spectra (ISRS) curves for Seismic Category I/II equipment or items are attached to the blower data sheets.

3.8.9.4 Seller shall submit to the Buyer seismic compliance documentation for permission to proceed.

3.9 Electrical Requirements

3.9.1 Acceptance of Electrical Equipment

- All electrical equipment for facility and equipment wiring, as defined by the National Electrical Code NFPA 70-1999, shall be Approved. Approval will be in accordance with Article 90-4, "Enforcements", Article 90-7, "Examination of Equipment for Safety," and Article 110-3, "Examination, Identification, Installation, and Use of Equipment."
- Approved means "Acceptable to the Authority Having Jurisdiction" (AHJ), as defined in Article 100 of NFPA 70-1999. Only the WTP Electrical AHJ can provide the approval.
- "Equipment" is defined by the NFPA 70 as, "A general term including material, fittings, devices, appliances, fixtures, apparatus, and the like used as a part of, or in connection with an electrical installation". As used here, the entire mechanical assembly is not considered an electrical installation, only the electrical and/or electronic components, and the interconnecting wiring.
- Listing and labeling by an OSHA Recognized NRTL is the primary means (Method 1 below) of obtaining WTP AHJ approval for electrical equipment, devices and materials.
- All Control Panels shall be UL labeled by a certified UL 508A shop.
- Electrical Equipment that is installed on (standard or custom fabricated) Mechanical Equipment shall comply with the requirements stated above.
- Electrical Equipment, that is part of a Mechanical Packaged Equipment assembly, being field-evaluated and Labeled at the factory by a NRTL is an alternate method of obtaining WTP AHJ approval.

3.9.1.1 Method 1 (Primary): Listed, Labeled of Certified (i.e. UL508A).

3.9.1.1.1 The WTP AHJ shall approve and accept electrical equipment without additional examination if it is Listed, Labeled, or Certified by a US NRTL, as recognized by OSHA under 29 CFR 1910-Subpart S and is acceptable for the application, environment and other requirements of NEC Article 110. For a listing of and Typical Registered Certification Marks of US NRTL's recognized by OSHA go to http://www.osha.gov/dts/otpca/nrtl/nrtlmrk.html.

3.9.1.2 Method 2 (Alternate): Field Evaluation by a NRTL

3.9.1.2.1 Electrical equipment that is part of an overall electrical or mechanical assembly having a NRTL safety evaluation or a field evaluation, which states the equipment has been accepted or otherwise deemed safe by the NRTL recognized by OSHA under 29 CFR 1910-Subpart S, using US standards, will be evaluated by the WTP AHJ for acceptability. If found acceptable no further examination of the equipment is required.

3.9.1.2.2 The supplier shall submit all field evaluation reports completed by an OSHA recognized NRTL to the Buyer for review and approval by the AHJ. These field evaluation reports shall show compliance to the applicable USA Electrical Standard(s) recognized by OSHA that are listed on the OSHA website http://www.osha.gov/dts/otpca/nrtl/allstds.html. The NRTL Label will be as shown on the OSHA website with whatever additional markings that are necessary to indicate acceptability for use in the USA http://www.osha.gov/dts/otpca/nrtl/nrtlmrk.html.

3.9.1.2.3 The supplier shall submit a Certificate of Compliance (C of C) document for review and approval by the AHJ that lists the USA Electrical Standard(s) that each electrical material or equipment is evaluated to for it's NRTL Listing. Only those standards that are listed on the OSHA website

http://www.osha.gov/dts/otpca/nrtl/allstds.html are acceptable to the AHJ. The certification shall confirm that the NRTL Label for each electrical component will be as shown on the OSHA website including the additional markings required to indicate acceptability for use in the USA http://www.osha.gov/dts/otpca/nrtl/nrtlmrk.html.

3.9.1.3 If a supplier is unable to meet the criteria in Method 1 or Method 2, the supplier shall request in writing a variance by the WTP Electrical AHJ.

3.9.2 Circuits of different voltages (service level) shall be terminated on physically separate terminal strips and clearly labeled to show the circuit voltage. Terminal blocks shall be segregated according to signal type. In the event safety instrument system components are included in an enclosure, the wiring shall be clearly identified and segregated from non-safety instrument system circuits. [Section 5.5.3.3, *Electrical*, 24590-WTP-3PS-EKP0-T0001]

3.9.3 AC power shall be routed through separate wireways or separated with a divider from 24 VDC discrete and analog instrument signals within enclosures. Power and signal cabling shall not be run in parallel, except in separate wireways, and should cross at a 90-degree angle only. [Section 5.5.3.4, Electrical, 24590-WTP-3PS-EKP0-T0001]

3.9.4 Wires shall be tagged with the Supplier's cable designation number at both ends with (heat shrinkable or non-shrinkable) plastic sleeve type wire markers. [Section 5.5.3.6, Electrical, 24590-WTP-3PS-EKP0-T0001]

3.9.5 Instrumentation cables shall be terminated in separate junction boxes from the power and control cables. [Section 5.5.4.1, Electrical, 24590-WTP-3PS-EKP0-T0001]

3.9.6 Where cables supplied and installed by Buyer are run to the package unit, the Supplier shall provide space for installing and terminating the cables. [Section 5.5.4.2, Electrical, 24590-WTP-3PS-EKP0-T0001]

3.9.7 Wiring shall be installed in metal conduit. Minimum conduit size shall be ¾ inch. ½ inch conduit is allowed when connecting to devices with ½ inch hubs. [Section 5.6.1.1, Electrical, 24590-WTP-3PS-EKP0-T0001]

3.9.8 Liquid-tight flexible metallic conduit shall preferably be used to isolate the transmission of vibration to the conduit system, and for connection to equipment which may be periodically removed. [Section 5.6.1.2, Electrical, 24590-WTP-3PS-EKP0-T0001]

3.9.9 Where conduit is exposed to potential water spray (outdoor or indoor), it shall be sloped for drainage. A stainless steel breather shall be installed at the high point of the conduit system, and a stainless steel drain shall be installed at the low point of vertical conduit runs complying with UL and NFPA standards. [Section 5.6.1.4, Electrical, 24590-WTP-3PS-EKP0-T0001]

3.9.10 Conduit connections to junction boxes shall be made using watertight threaded hubs or factory threaded hubs. [Section 5.6.1.5, Electrical, 24590-WTP-3PS-EKP0-T0001]

3.9.11 Non-current carrying metallic parts of electrical equipment shall be bonded together and made electrically continuous. Two grounding pads shall be furnished at diagonally opposite corners at the edge of skids for connection by the Buyer to the area ground grid. [Section 5.7.1, Electrical, 24590-WTP-3PS-EKP0-T0001]

3.9.12 Electrical equipment on the packaged unit shall be bonded to the package unit skid. [Section 5.7.2, Electrical, 24590-WTP-3PS-EKP0-T0001]

3.9.13 Junction boxes and control cabinets shall be provided with grounding means. [Section 5.7.4, Electrical, 24590-WTP-3PS-EKP0-T0001]

3.9.14 Permanent nameplates or labels shall be provided to identify each meter, relay, control switch, indicating light, circuit breaker compartment, and to identify all devices and terminal blocks within the compartments. [Section 5.10.1, Electrical, 24590-WTP-3PS-EKP0-T0001]

3.9.15 Exterior nameplates shall be made of laminated, beveled plastic of manufacturer's standard, with black lettering or numbering on a white background and shall be permanently affixed on the exterior. The method of affixing shall not violate the NEMA rating of the enclosure. [Section 5.10.2, Electrical, 24590-WTP-3PS-EKP0-T0001]

3.9.16 Interior labels for all devices, parts and components shall be machine printed, permanent and self-adhesive labels. [Section 5.10.3, Electrical, 24590-WTP-3PS-EKP0-T0001]

3.10 Low Voltage Induction Motors

3.10.1.1 Motor drive combination shall be suitable for operation for the design conditions shown on the Blower Data Sheets.

3.10.1.2 Induction motors shall be in accordance with Specification 24590-WTP-3PS-MUMI-T0002, Low Voltage Induction Motors, and as indicated on the motor data sheets appended to the Blower Data Sheets except:

- Motors may have cast iron rotor cages.
- Motors space heater are required for the purpose of long term storage. The motor space heaters do not have to be removable. See specification 24590-WTP-3PS-MUMI-T0002, Section 3.4 for heater requirements.

3.10.1.3 Drive motors and driven equipment shall be specifically designed and constructed for use with adjustable speed drives in conformance with NEMA MG-1 Part 31 criteria. Manufacturer shall provide certification to the Buyer that the motor is compatible with an adjustable speed drive and will perform within the specified duty range without incident.

3.10.1.4 Transient voltage variations due to short circuits, disturbances from outside supplies, and their effect on plant operation cannot be avoided. The following criteria shall apply in such cases: momentary voltage depression down to 80% of rated equipment voltage shall not affect equipment

3.10.1.5 Motor shall have a rated horsepower of minimum of 115% of the design brake horsepower (bhp). The motor shall also have a service factor of 1.15 at rated horsepower.

3.11 Instrumentation and Control Requirements

[Source: 24590-WTP-3PS-JQ07-T0001, Rev 2] See datasheet for applicable instrumentation and control components for each blower.

3.11.1 General requirements:

3.11.1.1 Instrument circuits shall be protected and housed to meet the electrical area classification in which it is installed. The choices of housing shall satisfy all pertaining codes. [Section 3.3.4, *Instrumentation*, 24590-WTP-3PS-JQ07-T0001]

3.11.1.2 Intrinsically safe instrument systems should not be used, unless there are special site requirements, and then only with the Buyer's approval. Intrinsically safe system requires certification by Underwriters Laboratory (UL) or Factory Mutual (FM) Insurance Company. [Section 3.3.4. *Instrumentation*, 24590-WTP-3PS-JQ07-T0001]

3.11.1.3 This specification includes a list of recommended suppliers of instruments. Bidder's proposal shall include cost associated with the use of Buyer designated instruments. [Appended Section 3.4.1, 24590-WTP-3PN-JQ07-00012]

Table 1. Instrument Supplier List

Description	Supplier	Comments
Temperature Sensor(RTD)	Daily Thermetrics	
	IST Conax Nuclear	ITS OK for Rad service
	Emerson (Rosemount)	
	Temp-Pro Inc.	
	Thermoelectric	OK for Rad service
	United Electric	
Speed Sensor	Air-Pax	
	Electro-Sensors	

3.11.1.4 Temperature measurement devices shall be selected that are optimized for the application and environment of the measurement services. This includes installation constraints, ambient conditions, and process conditions of the measurement devices. The following describes the Buyer's requirements for specific types of temperature measuring elements and systems. [Section 3.4.5.2]

- All temperature elements, Thermocouples (T/Cs) or Resistance Temperature Devices (RTDs), shall be installed in thermowells to permit removal without process disturbance except where there is no risk to personnel from the process fluid during removal of the measuring element, i.e. shell skin, motor bearings and motor windings. Where a thermowell is not used, a permanent label shall be affixed to the primary element, indicating that there is no thermowell.

- Instrument ranges shall be selected such that the normal operating point is between 35% and 75% of the range of the instrument. Except where the Buyer has specifically

identified manufacturer and model, all the instruments shall be selected by the Supplier in accordance with guidelines provided herein. The instruments described below shall be selected to meet the required safety classification, specified quality, and the design criteria stated herein and in the primary equipment specification. The systems designed and fabricated shall meet the specified reliability and availability for each system or component.

- Sheathed RTDs with transmitters shall be used for remote temperature indication.
- RTD elements shall be Platinum with a nominal resistance of 100 Ohm at 0 °C (32 °F). The resistance-vs.-temperature characteristic curve shall conform to DIN 43760, IEC 60751 with a temperature coefficient of 0.00385 ohms/ohm/°C. Three wire element design shall be used.
- RTDs shall be sheathed with Magnesium Oxide insulation. The sheath shall be 316SS and ¼" diameter as a minimum. All T/Cs or RTDs shall be duplex design, spring loaded, and supplied with a connection head with internal grounding screw and external ground terminal. All elements shall be connected in the connection head.
- Temperature measurements using RTDs shall use remote mounted transmitters with the appropriate input/output voltage isolation and located in the field or panel to connect an isolated signal to the Buyer's or Supplier's control system. [Section 3.4.5.2.1]

3.11.1.5 The Supplier shall provide and install non-contacting vibration and position sensor probes for machine monitoring of radial vibration. The installation of all bearing thermocouple and shaft position monitoring equipment shall be in accordance with API 670. Bearing thermocouples shall be type E calibration. [Section 3.4.5.16.1, *Instrumentation*, 24590-WTP-3PS-JQ07-T0001]

3.11.1.6 If required on Blower Data Sheet, speed transmitters shall have sensors of non-contact type. [Section 3.4.5.16.2, *Instrumentation*, 24590-WTP-3PS-JQ07-T0001]

3.11.1.7 All enclosures, cabinets, panels, and racks shall be designed and fabricated to be in full compliance with NFPA 70-1999. [Partial Section 3.6]

3.11.1.8 Access to enclosure internal components or equipment shall not require the use of hand tools. Access to any component within the enclosure for maintenance or replacement shall not be prevented by proximity to other components within the enclosure. Equipment mounted in the rear of the enclosure shall be on a back-panel and positioned to facilitate removal and replacement. Enclosure back-panels shall be fabricated from low-carbon steel and shall be finished with semi-gloss or gloss white paint. Enclosures shall be sized to allow clearance between the enclosed components, cables, print pockets, and components mounted on the door. [Section 3.6.3, *Instrumentation*, 24590-WTP-3PS-JQ07-T0001]

3.11.1.9 The enclosure grounding system shall be installed in conformance to IEEE Guide 1050-1996, section 5.3.1 "Single point grounding system". All instrumentation enclosures shall have an equipment safety ground bus and an isolated signal ground bus, except instrument junction box. Instrument junction box shall only have an equipment safety ground. The grounding bus shall be constructed with solid copper, and all connections shall be drilled and tapped. The ground bus shall be drilled and tapped for an additional 20 percent spare terminations. [Section 3.6.5, Instrumentation, 24590-WTP-3PS-JQ07-T0001]

3.11.1.10 All removable metal components, instruments, or electrical devices shall be connected via individual conductors to the equipment safety ground bus. Components shall not be grounded to each other via a common wire connecting the components to the equipment safety ground bus. Enclosure door and back-panel shall be connected to the equipment safety ground bus via individual conductors. Ground conductors connected to the equipment safety ground bus shall have an insulation color code of green. [Section 3.6.5, Instrumentation, 24590-WTP-3PS-JQ07-T0001]

3.11.1.11 The Supplier shall mount, connect and wire each instrument or control device such that adjustment, maintenance, removal and replacement may be accomplished in a safe manner without interruption of service to adjacent but unrelated equipment and without placing undue stress on installed wiring or devices. Accommodations for strain relief shall be made when routing wire to hinged enclosure doors and shall be wrapped with spiral wire wrap. [Section 3.6.6, *Instrumentation*, 24590-WTP-3PS-JQ07-T0001]

No more than two wires shall be connected to one terminal point and only if the terminal is rated for the two wires. Wire splicing shall not be used unless approved by the Buyer. Bridge or comb jumpers are preferred to wire jumpers on terminal strips. Jumpers shall not be installed on the field side of the terminal strip. [Section 3.6.6, *Instrumentation*, 24590-WTP-3PS-JQ07-T0001]

3.11.1.12 Terminal blocks shall be selected to accommodate the function and electrical requirements associated with each wiring application. They shall incorporate the following features:

1. Space saving design
2. Screw clamp wire connection
3. Single level configuration
4. Integral test facilities
5. DIN-rail (35mm) mounted [Section 3.6.6, *Instrumentation*, 24590-WTP-3PS-JQ07-T0001]

3.11.1.13 Isolating type terminal blocks shall be Weidmuller "W" series, Allen Bradley 1492-WKD3TP, Phoenix Contact, or Buyer approved equal. Non-isolating feed-thru terminal blocks shall be Weidmuller "W" series, Allen Bradley 1492-W4, Phoenix Contact, or Buyer approved equal. All terminal blocks shall be identified by a unique terminal block number and approved by the Buyer. [Section 3.6.6, *Instrumentation*, 24590-WTP-3PS-JQ07-T0001]

3.11.1.14 For all enclosures, each incoming power supply shall have a manually actuated electrical power disconnect device mounted on/in the enclosure in an easily accessible location. The electrical power disconnect device may be a single device or multiple devices for individual circuits. Each device that uses 120 VAC for power shall have individual connections protected via rail mounted circuit breakers. The circuit breakers used for individual control or power circuit protection in the enclosure shall be thermal magnetic breakers such as Weidmuller CB, Allen Bradley type 1492-GH, Phoenix Contact, or Buyer approved equal. They shall be Dual-In-Line, DIN-rail mountable TS35, TS32, or equivalent. Power shall not be "daisy chained" from instrument to instrument; however, the bridge or comb jumpers may be used on the supply side of the circuit breakers. A fuse and circuit breaker directory shall be contained in a holder permanently affixed on the inside of each door or back-panel and protected by a clear window. [Section 3.6.6, *Instrumentation*, 24590-WTP-3PS-JQ07-T0001]

3.11.1.15 All instrument signal cables shall be of the type and specification as listed in section 4.2.4-Instrumentation Cable Schedule. Power cable, wire size and type shall be in accordance with NFPA 70 - 1999. [Section 3.6.6, *Instrumentation*, 24590-WTP-3PS-JQ07-T0001]

3.11.1.16 All wires and cables external to an enclosure shall be of the instrument tray cable (ITC) type, flame-retardant (passes IEEE 1202 vertical flame test), and have a 90 °C continuous rating in wet or dry locations. All cable insulation and jacket material shall be resistant to heat, moisture, impact, ozone, and meet or exceed the following requirements:

- 300 V rated for low voltage instrument cables (up to 120 VAC and 125 VDC)
- 600 V rated for power/motor control cables (up to 480 VAC and 250 VDC) [Section 3.6.6, *Instrumentation*, 24590-WTP-3PS-JQ07-T0001]

The wire insulation color for power wiring shall be of the following:

- Black -Ungrounded conductors more than 50 VAC
- White-Grounded conductors more than 50 VAC
- Green-Equipment grounding wire
- Green-Yellow tracer-Isolated instrument grounding wire
- Light Blue-Ungrounded supply voltage less than 50 V (DC or AC)
- Violet-Switched ungrounded voltage less than 50 V (DC or AC)
- White/Blue tracer -Grounded or return supply voltage less than 50 V (DC or AC)

[Section 3.6.6, *Instrumentation*, 24590-WTP-3PS-JQ07-T0001]

3.11.1.17 The enclosures shall be designed so that tools and test equipment may be used to accomplish all necessary adjustments, maintenance, cleaning, testing, and calibration. If specialized tools are needed for adjustments, maintenance, cleaning, testing, and calibration the Supplier shall provide two sets per order. Test points and calibration areas shall be accessible, clearly identified, and labeled. Adequate space shall be provided for removal and replacement of individual instruments or components located inside the enclosure. Equipment mounted in the rear of the enclosure shall be positioned to facilitate removal and replacement from the front of the enclosure. [Section 3.6.7, *Instrumentation*, 24590-WTP-3PS-JQ07-T0001]

3.11.1.18 The Supplier shall provide and install a suitable arc suppression device or kickback diode across switched loads unless the switching component includes inherent arc suppression. Kickback diodes shall be supplied and installed on all inductive DC loads. [Section 3.7.5, *Instrumentation*, 24590-WTP-3PS-JQ07-T0001]

3.11.1.19 All Supplier provided wiring shall be identified at each end with a numbering system that is cross-referenced on all appropriate drawings. The wire-numbering scheme shall be proposed by the Supplier with Buyer's concurrence. Ferrules or wire markers shall be indelibly and clearly marked in black on white plastic, heat shrinkable sleeves. Open markers or "C" type sleeves that can be applied after a conductor is terminated will not be accepted. Junction box (JB) terminals shall have adequate space between them and the JB internal walls so connected cables and individual wire numbers can be easily read without disturbing the wiring within the JBs. [Section 3.7.8, *Instrumentation*, 24590-WTP-3PS-JQ07-T0001]

3.11.1.20 All cables provided by the Supplier shall be clearly identified with a heat shrink type label. [Section 3.7.8, *Instrumentation*, 24590-WTP-3PS-JQ07-T0001]

3.11.1.21 Instrument mounting locations shall be selected with consideration of both function operation and accessibility requirements for maintenance. Instrumentation should not be mounted on vibrating equipment or light duty support. Instruments shall not be mounted on handrails or safety railings. Instrument mounting bolting and hardware shall be 316 SS. Mounting brackets and stands for ITS instrumentation shall be qualified to the seismic requirements specified by the primary equipment specification. [Section 3.8.8, *Instrumentation*, 24590-WTP-3PS-JQ07-T0001]

3.11.1.22 Each instrument shall be installed so as to allow adequate safe access for both operation and maintenance. [Section 3.8.8.2, *Instrumentation*, 24590-WTP-3PS-JQ07-T0001]

3.11.1.23 Blowers shall be provided with a blower shaft speed sensor which shall include an "Air Pax/ Al-Tek" brand or Buyer approved equivalent shaft sensor, and any connecting cables or signal conditioners required to provide a 4-20mA signal output. Where required on the Blower Data Sheets, additional SMAR 1/F 302 Foundation Fieldbus converters shall be provided.

3.11.1.24 Blowers shall be provided with a "Daily Thermetrics" brand or Buyer approved equivalent three wire, dual element, 100 ohm platinum RTD to measure the temperature of each blower bearing. Temperature coefficient shall be 0.00385 ohms/ohm/°C. Generally all RTDs shall be duplex design, spring loaded, and supplied with a connection head with internal grounding screw and external ground terminal. All elements shall be connected in the connection head. Applications where a connection head is not feasible; general purpose RTD probes will be allowed.

3.11.1.25 Blowers shall come equipped with Bently Nevada transducers or Buyer approved equivalent to measure the vibration of the blower bearings. The instruments shall transmit a 4-20 mA signal proportional to the vibration.

3.11.1.26 Both temperature, speed, and vibration sensor wires shall be connected to terminal blocks provided by the Seller. Terminal blocks shall be installed in a separate electrical termination box for external connection to Buyer's cable(s). Seller shall provide sufficient terminals to allow landing and continuation of conductor shields.

3.11.1.27 The Buyer will provide power for the Suppliers' instruments. Each source will be delivered at 120 VAC, 1 phase, 60 Hz, grounded system. All other voltages required by Supplier shall be derived from the Buyer supplied 120 VAC, 1 phase, 60 Hz, grounded system. Inter-connecting wiring or cabling for packaged units furnished by Supplier, shall be terminated and tested according to this specification.

3.11.1.28 All internal enclosure wiring shall be neatly dressed in slotted PVC wire-ways. The wire-way shall be securely fastened to the enclosure back-panel. Supplier shall provide PVC wire-ways on the opposite side of field terminations to be used by the Buyer. Adequate space shall be provided around terminal blocks to allow the Buyer to train and terminate cables. The field side wire-way shall be designed for multi-core field cables with conductor size of #14 AWG.

3.12 Accessibility and Maintenance

3.12.1.1 Seller's recommended accessibility and recommended spares for each piece of equipment shall be included in the Seller's submittal.

3.12.1.2 Seller shall provide the inspection and maintenance requirements with the recommended intervals to be performed by Buyer.

3.13 Accessories

3.13.1 Unitary Inertia Bases

When indicated on the Blower Data Sheets, blowers shall be provided with a unitary inertia base.

3.13.2 Vibration Isolators

3.13.2.1 When installation is specified on the Blower Data Sheet, the vibration isolators shall be Supplier specified and supplied. Supplier shall specify the isolator manufacturer and model number, spring minimum diameter, spring deflection, and spring restraint features on the Blower Data Sheet.

3.13.2.2 Submittal drawings shall show locations for vibration isolator placement on blower assemblies when installation is specified on the data sheet.

3.13.2.3 Each vibration isolator shall deflect equally under the conditions of dynamic loading.

3.13.2.4 Spring mounts shall be selected to provide 2 in. minimum deflection at design loading, and shall allow for 50 % additional travel to solid. Spring mounts shall incorporate seismic restraint capability for a seismic occurrence as defined in Specifications 24590-WTP-3PS-SS90-T0001, Seismic Qualification of Seismic Category I/II Equipment and Tanks or 24590-WTP-3PS-FB01-T0001, Structural Design Loads for Seismic Category III & IV Equipment and Tanks. Spring mounts shall include enlarged base plates for seismic anchoring.

3.13.3 Flexible Connectors

3.13.3.1 When specified on the data sheet, Supplier shall provide flexible connectors. Supplier shall specify the connector manufacturer and model number on the blower data sheet.

3.13.3.2 When specified on the data sheet, submittal drawings shall show locations for or placement of flexible connectors on blower assemblies

4 Materials

4.1 Construction

4.1.1 Materials of construction shall conform to the Blower Data Sheets as applicable.

4.1.2 Material test reports of chemical and physical properties shall be provided for all stress or pressure retaining components of the blowers, including the blower impeller and its components, blower shaft, and housings.

4.1.3 The ASME and/or ASTM material numbers and grades shall be identified and a Manufacturer's Material Certificate of Conformance shall be provided for scrolls, housing side plates, inlets, support framing integral to the blower, and weld filler metal. All material designations shall be indicated on the fabrication drawings and in the material lists.

4.1.4 Blower bearing pedestals and motor bases shall be fabricated from structural steel shapes and plates properly reinforced for maximum rigidity, so they do not amplify motion from the blower or its components at any speed of operation..

4.1.5 Blower housings shall be fabricated from materials specified in Blower Data Sheets.

4.2 Electrical

4.2.1 Low voltage power and control cables which are located external to the enclosures and not integral to the components shall be stranded copper, 600 V type XHHW-2 or Buyer-approved equivalent.

4.2.2 Internal enclosure wiring shall be stranded copper, flame-retardant, 600 V, synthetic heat resistant (SIS), or machine tool wire (MTW), or high-flexible thermoset.

4.2.3 Electrical equipment on the packaged unit shall be grounded to the package unit skid.

4.2.4 The minimum size of conductor will be as follows (this requirement does not include cabling integral to components):

Duty	External Conductor Size (AWG)	Internal Wiring in enclosures Size (AWG)
Power and Lighting (480 V and below only)	12	14
Current Transformer Wiring	10	10
Control Circuits (120 V AC / 125 V DC) and Instrument power circuits	14	16
Instrumentation – Single pair or triad cable	16	18
Instrumentation – Multi-pair or triad cable	18	18
Communication cable (Fieldbus, Profibus)	18-22	18-22

4.2.5 Enclosures

The Supplier shall furnish terminal boxes as follows:

4.2.5.1 Wiring for electronic, instrument, communication and signal cables shall be segregated from both power and control cables. The 120VAC power supply for instruments will be routed in the same panel as the instrument wires.

4.2.5.2 Enclosures shall be designed for front access only unless otherwise specified. All components and equipment in enclosure shall be accessible and removable from the front. Enclosures shall be suitably rated for the environment specified.

4.2.5.3 Where cables to the blower are to be supplied and installed by the Buyer, the Supplier shall provide space for installing and terminating the cables.

4.3 Prohibited Materials

4.3.1 Bronze, copper, lead, zinc, tin, antimony, cadmium, or other low melting point metals, their alloys, or materials containing such metals as their basic constituents or molybdenum, and materials with halogen content of more than 200 ppm shall not be used in direct contact with stainless steel.

4.3.2 Asbestos and Teflon shall not be used in any component of the blowers or accessories.

4.3.3 Certain chemicals and materials are restricted from use at WTP. Restricted chemicals and materials are given in 24590-WTP-LIST-CON-08-0001, Restricted Materials List. Inclusion of these chemicals/materials requires specific authorization from the Buyer (WTP Safety Assurance).

5 Fabrication

5.1 Fabrication of Blowers

5.1.1 Blower wheels / impellers shall be of the type and fabricated from materials specified in Blower data sheets.

5.2 Welding

5.2.1 All fabrication, welding, inspection and repair procedures of blower wheels, blower housing, housing framing and supports shall conform with the following, as applicable:

- AWS D1.1, Structural Welding Code, Steel
- AWS D1.3, Structural Welding Code, Sheet Steel
- AWS D1.6, Structural Welding Code, Stainless Steel
- AWS D9.1, Sheet Metal Welding Code
- AWS D14.6, Welding of Rotating Elements of Equipment

5.2.2 Repairs required as a result of weld rejection by either Buyer or Seller's final inspection shall be fully documented in accordance with Seller's QA program. Weld repair records shall be included with document package.

5.2.3 Welding procedures and procedure qualification records shall be submitted to Buyer for review and permission to proceed prior to use. Each procedure shall be prepared and qualified in accordance with the requirements of the above listed standards or ASME B & PVC, Section IX.

5.2.4 All welded seams on the pressure boundary of the unit shall be continuously seal welded.

6 Tests and Inspections

6.1 General

Multi-stage blower performance testing shall be in accordance with ASME PTC-10-1997.

Seller shall conduct and shall be responsible for the shop tests called for in this specification and in applicable standard and referenced documents. Seller shall furnish all facilities necessary for the performance of such tests.

Seller shall submit an inspection and test plan for Buyer review and approval.

6.2 Environmental Equipment Qualification

Environmental equipment qualification of the blowers, motors, instruments, and electrical accessories shall be conducted in accordance with specifications, 24590-WTP-3PS-JQ06-T0005, Engineering Specification for Environmental Qualification of Control and Electrical Systems and Components .

6.3 Seismic Equipment Qualification

Seismic qualification of the design of blowers shall be in accordance with the methods and procedures described in Specification 24590-WTP-3PS-SS90-T0001, "Seismic Qualification of Seismic Category I/II Equipment and Tanks", or 24590-WTP-3PS-FB01-T0001, "Structural Design Loads for Seismic Category III/IV Equipment and Tanks".

In addition to seismic analysis, seismic testing of a sacrificial unit to determine operability shall be required when the Environmental Qualification Data Sheet states the equipment must be operational after a seismic event. Material from the sacrificial units shall not be used in tagged equipment (permanent plant equipment).

6.4 Personnel Qualifications

6.4.1 Personnel performing nondestructive examination or reviewing nondestructive examination results shall be qualified in accordance with ASNT-SNT-TC-1A, Level II or Level III. Qualifications of personnel performing inspections and tests shall be verified by the Seller.

6.5 Non-Destructive Examinations

6.5.1 Seller shall perform Non-Destructive Examinations. Non-Destructive Examinations may include visual, ultrasonic, radiographic, magnetic particle, liquid penetrant and eddy current examination procedures.

6.5.2 Non-Destructive Examination procedures shall be submitted to Buyer for review and permission to proceed prior to use.

6.5.3 All pressure boundary parts made by casting shall be demonstrated to be surface-defect free by penetrant examination using Type I Method A techniques in accordance with ASME BPVC Section V.

6.5.4 All welds shall be 100% visually (VT) and liquid penetrate (PT) examined.

6.6 Shop Tests

Buyer's inspector will indicate tests and inspections that the inspector intends to witness after review of Seller's work plan. Seller shall perform standard factory tests, which, as a minimum, includes the following tests listed in sections 6.6.1 through 6.6.6, as well as tests called out in referenced specifications for the motors.

All test results shall be certified, documented, and submitted to Buyer for review, and permission to proceed. All test reports shall be accepted by Buyer based on the acceptance criteria outlined in the Supplier's test procedures. Acceptance of a test report shall be confirmed by receiving a status of "Work may proceed" from the Buyer.

The inspector may witness the following required shop tests:

6.6.1 Test for blower performance. Performance testing shall be done on one (1) of similar size blowers.

6.6.1.1 Multi-stage blower performance ratings may be based on testing in accordance with ASME PTC-10-1997. Inspection and test procedures shall be submitted to Buyer. Test records and results shall be certified.

6.6.2 Functional performance test for electrical equipment.

6.6.3 Vibration performance shall be checked and reported at 10% increments of full speed blower tests. Vibration testing shall not be performed within +/- 20% of the blower's critical speed.

6.6.4 A meg-ohm test of all wires shall be performed prior to termination of all wires pulled into conduit. The meg-ohm test results shall be certified, documented, and submitted to Buyer for review.

6.6.5 A continuity check of all wiring shall be performed to verify conformance with Seller's wiring schematics. The continuity check test results shall be certified, documented, and submitted to Buyer for review.

6.7 Site Tests

Buyer startup personnel will perform test after initial installation. Buyer may request Seller assistance during startup.

7 Preparation for Shipment

7.1 General

Blower assemblies shall be packaged, shipped, handled and stored in accordance with ASME NQA-1, Part II, Subpart 2.2, Article 302, *Levels of Packaging*, at the following levels:

Level B:

- Blower assemblies with motors
- Motors in packages separate from the blower

Level C:

- Blower assemblies without motors and adjustable speed drives

7.2 Cleanliness

Seller's cleaning procedures shall be submitted to Buyer for information. Prior to surface preparation and coating application, visually examine welds, the blower impeller, gas stream surfaces of the blower housing, and the gas stream surfaces of all furnished accessories. Remove all dirt, oil, and grease, loose mill scale, weld spatter and other foreign matter on surfaces to be painted in accordance with Seller's cleaning and coating procedures.

7.3 Painting and Special Protective Coatings

7.3.1 See Attachment B

7.4 Tagging

A stainless steel nameplate shall be attached to each centrifugal blower showing the manufacturer's name, shop location, date of manufacture, serial number, equipment rating, equipment tag numbers, weight of assembly and purchase order number. Instruments shall be identified with Buyer provided tag numbers.

7.5 Packaging

Packaging shall be at the ASME NQA-1, Part II, Subpart 2.2, Article 302, *Levels of Packaging*, at levels in Section 7.1 above.

7.6 Documentation

Seller shall ensure that appropriate documentation is prepared and, if required, signed by the appropriate person(s). The shipping documentation shall accurately reflect specific traceability to the items being shipped. Drawings (wiring diagrams), showing external terminations for Buyer use to connect to Seller provided instrumentation shall be marked with the Buyer's instrument tag numbers.

8 Quality Assurance

The quality assurance program requirements of this specification are those specified in ASME-NQA-1 marked as applicable in Supplier Quality Assurance Program Requirements (SQAPR) Data Sheet attached to the material requisition, those specified in ASME NQA-1, Part II, Subpart 2.2, QA Requirements for Packaging, Shipping, Receiving, Storage and Handling of Items for Nuclear Power Plants, and those specified in 24590-WTP-3PS-G000-T0001.

8.1 QA requirements specific to item(s) or service

8.1.1 The supplier shall have in place a QA program meeting the applicable requirements of Part I of ASME-NQA-1 (2000). Quality Assurance Program Requirements datasheets attached to the MR define the requirements based upon the type or scope of work to be performed. The supplier shall

document and implement a QA program that is in compliance with these requirements. Each supplier is required to flow-down required QA program requirements to each successive tier in the supply chain. The supplier shall submit his QA manual with his bid.

8.1.2 The successful bidder must pass a pre-award survey by the Buyer. Supplier shall demonstrate that their quality program is in compliance with the procurement quality requirements listed in Quality Assurance Program Requirements Datasheets. The Supplier shall allow Buyer, its agent, and DOE access to their facility and any lower tier subcontractor's facility and records pertaining to this purchase order for the purpose of QA Audits and Surveillance at mutually agreed times.

8.2 Supplier Deviation

8.2.1 Each supplier shall be required to identify and promptly document all deviations from the requirements of the procuring documents. In addition, the supplier shall be required to described the recommended disposition based on appropriate analysis. Submittals of request for deviations from lower-tier suppliers shall be through the prime supplier to WTP.

8.2.2 Supplier-proposed deviations from procurement documents shall be initiated by use of Supplier Deviation Disposition Request (SDDR) form.

9 Configuration Management

Equipment and/or components covered by this specification are identified with Component Identification System numbers shown in Blower Data Sheets. Each item shall be identified in accordance with Section 7.4, Tagging.

10 Documentation and Submittals

10.1 General

Seller shall submit to Buyer Engineering and Quality Verification documents in the forms and quantities shown in Form G-321-E, Engineering Document Requirements, and Form G-321-V, *Quality Verification Document Requirements*, attached to the MR.

10.2 Submittals

The Seller shall submit the following:

10.2.1 Drawings

Drawings shall show the following information:

10.2.1.1 The outline dimensions of blower, including outline and detail drawings for each component (motor, etc). These drawings shall reflect the "as-shipped" configuration of the equipment and instrumentation. As a minimum, interface control drawings shall contain overall dimensions of the blower and motor, materials of construction, instrumentation interfaces and equipment mounting information including bolt hole sizes and quantities of bolts required.

10.2.1.2 Mounting dimensions and information required for the design of supports and foundations, including any special assembly instructions.

10.2.1.3 Operating weights of blower assembly including motor components.

10.2.1.4 The space required for the removal of components.

10.2.1.5 The locations of access doors.

10.2.1.6 The weights of individual components.

10.2.1.7 The locations and identification of parts that are included in the parts list.

10.2.1.8 Assembly drawings providing sufficient detail to facilitate assembly of the component parts of the blower.

10.2.1.9 Wiring schematic and control loop diagrams. Diagrams shall include wire gauges and fuse sizes applicable to the supplied units only.

10.2.1.10 The ASTM or equivalent designation for materials.

10.2.1.11 Interconnection diagram and cable schedule showing details of all internal connections and Buyer external connections. The Supplier's furnished cable schedule shall include service voltage and Class of Circuit per NEC Articles 725, 760 and 800 for each cable.

10.2.1.12 Blower performance curves at 60%, 80%, 100%, and 110% design speed at design conditions specified on the data sheets. Provide preliminary performance curves prior to submitting equipment drawings.

10.2.1.13 Blower performance curves including unstable operating surge region/limit.

10.2.1.14 Location and type of anchor bolts.

10.2.2 Procedures

Procedures are to be submitted to Buyer for approval prior to use and shall include:

10.2.2.1 Welding procedures

10.2.2.2 Procedures for repairs of rejected items or parts.

10.2.2.3 Cleaning and coating procedures.

10.2.2.4 Electrical component performance test procedures

10.2.2.5 Seller's shipping preparation and storage procedures.

10.2.2.6 Seismic test procedure and blower performance test procedure.

10.2.2.7 Test procedures for blower housing and shaft leakage tests.

10.2.2.8 Test procedures for sound, over-speed, vibration, and mechanical running tests.

10.2.2.9 Environmental equipment qualification test procedures in accordance with specifications, 24590-WTP-3PS-JQ06-T0005, Engineering Specification for Environmental Qualification of Control and Electrical Systems.

10.2.2.10 Commercial Grade Dedication Procedure

10.2.2.11 Commercial Grade Dedication Plans

10.2.3 Inspection and Test Reports

10.2.3.1 Records of repairs of rejected items or parts.

10.2.3.2 Welding inspection reports and welding repair reports if required.

10.2.3.3 Electrical component performance test reports

10.2.3.4 Blower housing and shaft seal leakage test reports

10.2.3.5 Blower performance test reports, including blower curves

10.2.3.6 Sound power levels

10.2.3.7 Blower wheel/shaft vibration, over-speed, and mechanical test reports

10.2.3.8 Environmental equipment qualification test reports in accordance with specifications, 24590-WTP-3PS-JQ06-T0005, Engineering Specification for Environmental Qualification of Control and Electrical Systems.

10.2.3.9 Seismic qualification reports in accordance with 24590-WTP-3PS-JQ06-T0003, Engineering Specification for Seismic Qualification of Seismic Category I Control and Electrical Systems and Components and 24590-WTP-3PS-FB01-T0001, Engineering Specification for Structural Design Loads for Seismic Category III/IV Equipment and Tanks.

10.2.3.10 NRTL field evaluation report per specification 24590-WTP-3PS-G000-T0019

10.2.3.11 Commercial Grade Dedication Packages per specification 24590-WTP-3PS-G000-T0019

10.2.3.12 NDE reports

10.2.4 Calculations

10.2.4.1 Seismic analysis/calculations shall be submitted for Buyer's review and permission to proceed. Calculations shall be in accordance with 24590-WTP-3PS-G000-T0014, Engineering Specification for Supplier Design Analysis.

10.2.4.2 Corrosion analysis and estimated design life report.

10.2.5 Manuals

Manuals and instructions shall include:

10.2.5.1 Erection and installation manuals which provide complete, detailed procedures for installing and placing equipment in initial operation. The manuals shall include all erection and installation drawings.

10.2.5.2 Operation and maintenance manuals which provide complete, detailed descriptions of components and accessories with data sheets showing design, construction and performance data for equipment. Manuals shall include drawings required for operation, maintenance and repair, maintenance requirements, instructions and operational troubleshooting guides. All manuals/drawings shall include OEM part numbers.

10.2.5.3 Instruction manuals shall cover all major components such as blowers, motors, controls, and instrumentation, including those purchased from a subcontractor. The Seller shall obtain such manuals and lists, and submit them to the Buyer.

10.2.5.4 The Seller shall provide instructions regarding site long and short and long term storage up to 5 years, and preparation and protection of equipment after installation and prior to operation.

10.2.5.5 Where manuals include information applicable to several components, sizes or models, non-applicable information shall be lined-out.

10.2.6 Certificates of Conformance

10.2.6.1 Seller shall provide Certificates of Conformance demonstrating compliance with all applicable standards, specifications, and drawings.

10.2.6.2 Seller shall certify lifting eyes or lugs and/or spreader bars are suitable for the safe, balanced lifting, and handling of the equipment.

10.2.7 Schedules

Lists and schedules shall include:

10.2.7.1 Schedule of engineering, fabrication, and testing.

10.2.7.2 Parts list, and cost for parts and items subject to deterioration and replacement. Seller to state shelf life and storage requirements for spare parts.

10.2.7.3 List of recommended spare parts.

10.2.7.4 Schedule of maintenance and part replacements required to maintain the equipment qualification in accordance with requirements in section 6 of specifications, 24590-WTP-3PS-JQ06-T0005, Engineering Specification for Environmental Qualification of Control and Electrical Systems.

10.2.8 Materials Certificates

10.2.8.1 Material Certification for components of the blowers shall be submitted as noted in Paragraphs 4.1.1, [illegible] and 4.1.3.

10.2.8.2 Certificates of calibration referenced to NIST traceable standards required for any calibratable instrumentation provided with the equipment.

10.2.9 Data

Data shall include:

10.2.9.1 Buyer's data sheets, completely filled out by the Seller, showing all information required to determine that the units are of the design and materials specified herein, including motor data sheets.

10.2.9.2 Buyer's equipment qualification data sheets, completely filled out by the Seller, showing all information required to determine that the units are of the design and materials specified herein, including motor data sheets.

10.2.9.3 Acoustic data report. Sound test data from similar equipment previously tested can be submitted in lieu of test for the purchased equipment.

Attachment A

Noise Requirements for Fans and Blowers

Attachment A
Noise Requirements for Fans and Blowers

1 Scope

This Attachment to the specification covers noise requirements for blowers, including all motors, equipment, and sub-systems furnished by the Supplier.

2 Permissible Noise Levels

The noise limit applies to operation of the Equipment at rated load or full capacity, and during restart and shut down. When the Equipment or a sub-system is operated cyclically or intermittently, the noise limits apply during all portions of the cycle.

The A-weighted sound pressure level at 3 feet from the surface of the blower casing shall not exceed 85 dBA. The limit applies on each of four sides of the blower at the elevation of the centerline of the blower, but no less than 3 feet above grade or the platform upon which the blower is mounted. All sound pressure level limits apply to each blower system taken as a whole, and as installed.

If the Supplier cannot meet the required A-weighted limit for sound pressure level, even in a free field, the Supplier shall provide the A-weighted level that they can and will guarantee. Estimated octave-band and A-weighted sound power levels of the blower inlet/discharge shall be provided.

Attachment B

High Integrity Centrifugal Blowers-Multi-stage -Customized Coating Specification

Contents

1 Scope B-1
2 General B-1
2.1 Responsibility B-1
2.2 Surfaces Not To Be Coated B-2
2.3 Definitions B-2
2.4 Safety B-3
3 Applicable Documents B-3
3.1 Codes and Standards B-3
4 Submittals B-4
5 Quality Plan B-5
5.1 General B-5
6 Materials B-5
6.1 Coating Materials B-5
6.2 Manufacturer's Standard Coating B-6
6.3 Machined-Surfaces Coating B-6
6.4 Coating Over Stainless Steel B-6
6.5 Batch Information B-6
6.6 Abrasives B-7
7 Application B-7
7.1 General B-7
7.2 Pre-Surface Preparation B-7
7.3 Surface Preparation B-8
7.4 Coating Application B-10
7.5 Remedial Work B-11

8 Inspection B-11
8.1 General B-11
8.2 Surface Preparation Inspection B-13
8.3 Coating Application B-13
9 Storage, Handling and Shipping B-14
9.1 Coating Materials B-14
9.2 Steel Items and Equipment B-15
10 Documentation B-15
Appendix C of Attachment B Materials/Coating Systems B-16
Appendix D of Attachment B Coating Schedule B-17
Appendix F of Attachment B Coating Manufacturer's Product Identity Certification Record B-18
Appendix G of Attachment B Surface Preparation and Coating Inspection Form B-19
Appendix H of Attachment B Manufacturer's Standard Coating Data Sheet B-20

Attachment B - High Integrity Centrifugal Blowers-Multi-stage - Customized Coating Specification

Per 24590-WTP-3PS-AFPS-T0001, Rev. 4

ENGINEERING SPECIFICATION FOR 24590-WTP-3PS-MACS-T0005

NOTE: Only the sections and appendices contained in this Attachment B apply to the High Integrity Centrifugal Blower MR. For continuity and maintaining configuration control, the section numbers from the AFPS specification noted above have been retained; inapplicable sections have been deleted.

Additional clarifications have been added to Sections 1.1, 6.4.1, and Appendix C, Table 2, Notes 1a and 1b, identified by an asterisk (*).

1 Scope

1.1 This specification defines the minimum requirements for Special Protective Coating (SPC) materials/coating systems, surface preparation, application, and inspection of protective coatings to be shop applied. Items and surfaces to be coated shall be coated in accordance with Appendix D of this specification. Unless indicated otherwise in the base technical specification/material requisition or purchase order, all coats will be shop applied. Finish color shall be *ANSI 70 Gray unless indicated otherwise in Section 2.0 of the Material Requisition (MR).

1.2 All Special Protective Coatings (SPC's) are designated as Commercial Grade (CM) and non-safety.

2 General

2.1 Responsibility

2.1.1 The SELLER shall supply all personnel, coating materials and all necessary surface preparation, application, inspection and other equipment as required.

2.1.2 The SELLER shall unload, inspect, and store all inbound steel items and equipment scheduled for coating when manufactured by others. Items found to be damaged or otherwise unsuitable for coating shall be identified and segregated for evaluation by the SELLER.

2.1.3 The SELLER shall store all coating materials, perform surface preparation, coating application and inspection in accordance with this specification and Buyer reviewed procedures. The coating systems and associated coating materials used shall be in accordance with Appendix D Coating Schedule or the Material Requisition (MR) when coatings are specifically identified.

2.1.4 The SELLER shall perform all inspections and tests contained in this specification as necessary prior to verification by the BUYER.

2.1.5 The SELLER shall provide application and inspection documentation for all coating work in accordance with this specification.

2.1.6 The SELLER shall provide environmental control equipment as necessary for coating application and curing.

2.1.7 The SELLER shall provide erection marking. Marks for color-coding of bulk materials and erection marking shall be fully compatible with the coating system specified.

2.1.8 The SELLER shall touch-up and repair defective or damaged coating in accordance with procedures submitted and reviewed by the BUYER.

2.1.9 The SELLER shall protect all coated surfaces prior to shipment and provide suitable coverings. ~~padding~~ padding, and strapping to protect coated items during shipment.

2.1.10 The SELLER shall only use inspection equipment that is currently (in date) calibrated.

2.2 Surfaces Not To Be Coated

2.2.1 Hold back coating from weld areas-

2.2.1.2 Three (3) to Four (4) inches for **shop** welds when using epoxy or other types of organic coatings

2.2.1.4 Note - The above coating hold back dimensions are only for items previously coated prior to welding. These coating hold back dimensions do not apply to shop welds that will be coated after welding is completed. This Section of the shop coating spec does not have anything to do with coating hold back requirements associated with visual inspection of welds during hydro testing. Coating hold back requirements associated with weld inspection must come from the prevailing code.

2.2.1.5 If the coating hold back at field welds is greater than 50% of the surface area of the item then the item does not required shop coating, however the items shall be blasted to remove all mill scale.

2.2.1.6 The coating hold back shall be sufficient to expose the entire shop weld for visual inspection on items fabricated prior to coating.

2.2.2 Name and instruction plates, etc.

2.2.3 Rubber or similar nonmetallic parts.

2.2.4 Machined surfaces.

2.2.5 Non-Ferrous metals unless otherwise specified.

2.2.6 Stainless Steel surfaces, unless specifically required by the BUYER (areas where stainless steel is welded to carbon steel the coating overlap onto the stainless steel shall be approximately 1 inch or as otherwise specified.)

2.3 Definitions

2.3.1 Batch- A quantity of coating made in one production run. A unique batch number is assigned for each production run of the coating material, curing agent, zinc powders, ~~[illegible]~~ and thinner.

2.3.3 Dry Film Thickness (DFT)- The thickness of an applied coating, once dry or cured. Usually expressed in mils (each mil is 1/1000 of an inch).

2.3.4 Fish Eyes (cratering)- Formation of holes or visible depression in the coating film. Usually from a contaminated particle on the surface prior to applying the coating.

2.3.5 Holiday- A Pinhole, skip, discontinuity, or void in the applied coating film.

2.3.7 Mfg. Std. Coating- A manufacturers standard coatings system applied to off the shelf items or standard line items of routine manufacture that are not specifically manufactured for the WTP project.

2.3.8 NIST- National Institute of Standards and Technology.

2.3.10 Pinholes- Minute holes visible in the applied coating without magnification that appears to penetrate one or more layers of the coating film.

2.3.11 Profile- The surface roughness resulting from surface preparation by abrasive blasting or other authorized methods. (Refer to Section -7.3.6).

2.3.13 Sag- The running of freshly applied coating on a vertical surface due to being applied too thick. (Same definition for runs and drips)

2.3.16 Training and Certification- Training shall include an understanding of the specification, work procedures and manufacturers published instructions. Certification shall include a documented performance test demonstrating quality work verifiable by the BUYER. (Refer to Sections 4.8, 5.1.7, 7.1.2, and 8.1.1.1)

2.4 Safety

2.4.2 The SELLER shall comply fully with OSHA Hazard Communication Standard 29CFR 1910. Material Safety Data Sheets (MSDS) for all materials, including thinners and cleaning solvents, shall be obtained from the materials manufacturer and upon request made available, at the place and time of work, for review.

2.4.3 The Volatile Organic Compound (VOC) content of all materials shall comply with Federal, State and Local or other Regulatory requirements.

3 Applicable Documents

3.1 Codes and Standards

The latest applicable edition of the following codes, standards, specifications or WTP procedures form a part of this specification.

3.1.1 American Society for Testing and Materials (ASTM)

ASTM E337- R96: 02	Test for Relative Humidity by Wet-and-Dry Bulb Psychrometer
ASTM D3276- 00: 05	Standard Guide for Painting Inspectors (Metal Substrates)
ASTM D4285- 99	Test Method for Indicating Oil or Water in Compressed Air
ASTM D4417- 99: 03	Field Measurement of Surface Profile of Blast Cleaned Steel

ASTM D4537- 96; 04; 04a	Standard Guide for Establishing Procedures to Qualify and Certify Inspection Personnel for Coating Work Inspectors in Nuclear Facilities.
ASTM D4940- 98; 03	Test for Conductimetric Analysis of Water Soluble Ionic Contaminants of Blasting Abrasives
ASTM D5064-01	Standard Practice for Conducting a Patch Test to Assess Coating Compatibility

3.1.2 The Society for Protective Coatings (SSPC)

SSPC-AB1 6/1/97; 7/1/07	Mineral Slag Abrasive
SSPC-PA2 5/1/04	Measurement of Dry Paint Thickness with Magnetic Gages
SSPC-SP1 11/1/82; 11/1/04	Solvent Cleaning
SSPC-SP10 11/1/04	Near White Metal Blast Cleaning
SSPC-SP11 11/1/87; 11/1/04	Power Tool Cleaning to Bare Metal
SSPC-VIS 1 6/1/02; 11/1/04	Guide and Reference Photographs for Steel Surfaces Prepared by Dry Abrasive Blast Cleaning

3.1.3 Occupational Safety and Health Administration (OSHA)

OSHA 29 CFR 1910	Occupational Safety and Health Standards

4 Submittals

4.1 SELLER shall prepare detailed written procedures for material receiving, marking, storage, handling, surface preparation, environmental control, application, curing, inspection, testing, touch-up/repair, application personnel qualification, inspector qualification, (G321- E , category 28.0) and proposed documentation forms as described within this specification. The final procedure and documentation forms shall be submitted and reviewed with BUYER's permission to proceed prior to the start of coating work. (G321-E category 15.0). Submittal requirements for manufacturers standard coating are found in Section 6.0.

4.2 The SELLER shall submit all procedures and verification documents in accordance with the purchase order (e.g., Appendix J, Form G-321-E, & V, Exhibit "D" located in the purchase order.).

4.4 The SELLER shall identify the specific products by manufacturer and catalog number and shall submit the coating manufacturer's latest published product data sheet, application [illegible] and Material Safety Data Sheets (MSDS). Conflicts, if any, between the SELLER's normal procedures, the coating manufacturer's recommendations, and this specification shall be brought to the attention of the BUYER for resolution and written permission to proceed. (G321-E category 11.0)

4.5 The SELLER shall submit original or copies of original Coating Manufacturer's Product Identity Certification Records for each and every batch of coating material used on the WTP project (Appendix F). (Refer to G321V category 13.0)

4.6 The SELLER shall submit a daily inspection record as part of the work procedures that includes all the elements provided in Appendix G as a minimum. An entry for Wet Bulb is not required when the accepted device used to measure humidity and dew point does not require a wet bulb. (Refer to Section 8.1.9 and 10.2) (G321V category 15.0)

4.8 The SELLER shall provide a personnel training and certification plan for applicators and inspectors. (Refer to Section 2.3.16, 5.1.7, 7.1.2 and 8.1.1.1.).

5 Quality Plan

5.1 General

5.1.1 The SELLER shall control the quality of items and services to meet the requirements of this specification, applicable codes and standards, associated procurement documents, referenced herein. The SELLER shall prepare and maintain documentation to provide evidence of compliance with reviewed procedures and this specification. A copy of the coating inspection documentation shall be included in the shipping documentation.

5.1.2 The SELLER, including any lower-tier organizations engaged by him, shall be subject to surveillance inspection by the BUYER representative until completion or termination of the procurement. This surveillance inspection does not relieve the SELLER from the responsibility for conformance to the requirements of procurement documents, this specification and authorized procedures.

5.1.4 The BUYER representative shall be provided with a work activity schedule and shall be notified of all required inspection points prior to the scheduled date for coating activities (Refer to MR Section 5.0).

5.1.5 If the SELLER's proposed work plan or procedures differ from the requirements of this specification, the SELLER shall specifically identify and explain all differences in writing and submit them to the BUYER for review and verification prior to the start of work (e.g., Supplier Deviation Disposition Request- SDDR).

5.1.6 All pre-established witness and hold points shall be witnessed by the BUYER unless a written waiver has been issued.

5.1.7 The SELLER's coating inspectors shall have previous experience in coating inspection and shall receive documented training in the specific project coating requirements, ASTM standards and other relevant standards including the reviewed work procedures. All coating inspectors working on steel items or equipment shall be trained and qualified meeting the requirements of Section 8.1.1.1.

6 Materials

6.1 Coating Materials

6.1.2 Coating materials including the primer, intermediate and finish coat on a given item, shall all be from the same manufacturer. One exception to this rule is when upgrading a Manufacturer's Standard (Mfg. Std.) coating using a compatible epoxy tie-coat and suitable topcoat coating system (refer to Section 6.2).

6.1.3 Appendix D Coating Schedule and Appendix C Tables contain the specified Special Protective Coatings for the WTP project. Appendix C contains the generic coating systems and approved coating materials.

6.1.4 Repair materials shall be the same as those originally used. Repair materials shall be in pre-measured units, and only complete kits shall be mixed. Splitting or breaking down pre-measured units of multi-component coating materials may be considered if the SELLER prepares a procedure that requires accurate measurement of all materials and Seller's Quality Control (QC) inspector monitoring/verification of each and every mix. This procedure must be submitted to the BUYER for review and permission to proceed.

6.2 Manufacturer's Standard Coating

6.2.1 Components and equipment which are normally mass-produced, inventoried, and supplied from stock generally have been coated with the Manufacturer's Standard Coating (Mfg. Std.) system. Included are small valves, pumps and rotating equipment, filters and electrical equipment such as switchgear, control panels, instrumentation, motors, transformers and electrical enclosures. Items and equipment which are specifically fabricated for the WTP project shall be coated per this specification unless the item is shown to be too delicate to properly coat per Appendix D or the specific requirements contained in the MR.

6.2.1.1 The SELLER may submit an alternate coating to the specified or Mfg. Std. System, by identifying the coating materials, surface preparation, application and inspection on Appendix H including the coating material's latest published technical data sheet and MSDS, to the BUYER for review and permission to proceed.

6.2.1.2 All Mfg. Std. Coatings must be identified on an Appendix H and submitted to the BUYER along with technical data sheets and MSDS'. A small, easily replaceable item where coating touch-up is not practical (e.g., very small, too delicate, low cost and easily replaceable) and can only be purchased with the manufacturer's standard coating, an Appendix H Manufacturer's Standard Coating Data Sheet is not required.

6.3 Machined-Surfaces Coating

6.3.1 Machined surfaces not specified to be coated with a specific coating system shall be protected with a solvent cutback asphalt temporary preservative (Daubert Chemical Tectyl 891, EF Houghton Chemical Rust Veto 342 or authorized equivalent). Temporary preservative applied to carbon steel that is overlapped onto stainless steel must meet the same chemical requirements as listed in Section 6.4. All equivalents must be identified on an Appendix H form and submitted along with the manufacturer's latest published data sheet and MSDS for review and permission to proceed by the BUYER.

6.4 Coating Over Stainless Steel

6.4.1 All coating materials, thinners, solvents and cleaning materials used on SS shall be shown to comply with the following requirements:

1) Leachable halogen content shall not exceed 200 ppm.

2) The total sulfur content shall not exceed 400 ppm.

3) The total of low melting point metals such as lead, zinc, copper, tin, antimony and mercury shall not exceed one (1) percent. Of this, mercury should not exceed 50 ppm. These low melting metals shall not be intentionally added during the manufacture of the coating.

*(ADDED for High Integrity Centrifugal Blowers MR): Sherwin Williams Macropoxy 646 and Carboline Carboguard 890 have been tested and meet the requirements above. Only these materials are approved for direct contact with stainless steel.

6.5 Batch Information

6.5.1 Each container of coating material used by the SELLER shall be marked with the following:

- The manufacturer's name

- The product designation
- Batch or lot number
- Location and date of manufacture
- The shelf life expiration date

6.6 Abrasives

6.6.1 Abrasives for blast cleaning shall be clean, free of oil or contaminants, and dry. The particle size shall be capable of producing the specified surface profile. Mineral and slag abrasives shall meet the requirements of SSPC AB-1. The first batch/lot of bulk, non-packaged, abrasives shall be tested for water-soluble contaminants and the conductivity shall not exceed 500 micro siemens/cm when tested in accordance with ASTM D4940. As an alternate, a chloride ion test kit, such as the Chlor*Test "A" manufacturers by Chlor Rid International Inc, or BUYER accepted equal may be used. The maximum allowable chloride level is 200ppm.

6.6.2 When using reclaimed steel grit/shot abrasive, the particle size shall be capable of producing the specified angular surface profile (minimum 50% steel grit in original mix and all adds shall be 100% steel grit). Reclaimed abrasives already in use and the first batch/lot of new abrasive shall be tested for water-soluble contaminants and conductivity. Conductivity shall not exceed 500 micro siemens/cm when tested in accordance with ASTM D 4940. As an alternate, a chloride ion test kit, such as the Chlor*Test "A" manufactures by Chlor Rid International Inc, or BUYER accepted equal may be used. The maximum allowable chloride level is 200ppm.

7 Application

7.1 General

7.1.1 It shall be the SELLER's responsibility to stop the surface preparation and coating at any time when conditions exist that might adversely affect the quality. The BUYER representative may reject any prepared or coated surfaces not in compliance with this specification.

7.1.2 All painters (e.g., surface preparation personnel and paint/coating material application personnel), shall be individually qualified and certified in accordance with the SELLER's written description that includes classroom training and capability demonstration using the WTP project specification, and the SELLER's procedures as reviewed by the BUYER.

7.1.3 Care shall be taken to avoid blasting or grinding away critical markings, which identify welders, joint numbers, or other markings, which identify the item. Where such data appears in the area to be coated, it shall be protected. SELLER's are responsible for assuring their sub-suppliers are instructed concerning these requirements.

7.2 Pre-Surface Preparation

7.2.1 Prior to mechanical cleaning, the surfaces to be coated shall be cleaned in accordance with SSPC SP1 to remove oil, grease, dirt, and other foreign matter that can interfere with the proper bonding of the coating. Any remaining sharp edges, weld spatter, or burrs found after the start of coating work shall be completely removed by grinding or other means. Pneumatic tools shall not be used unless they are fitted with effective oil and water traps on the exhaust air. If the steel items or equipment was shipped or stored so that the surface could have been contaminated with soluble salts (e.g., above deck ship transport, truck transport on

dirt roads close to ocean, storage), the area shall be pressure water washed (2,000-5000psi) with demineralized water to remove as much soluble salt contamination as possible prior to abrasive blasting.

7.3 Surface Preparation

7.3.1 Prior to the start of work, the SELLER shall examine all surfaces to be coated to determine their acceptability for the specified coating application. If the surfaces are found to be unacceptable, the SELLER shall return the surface to an acceptable condition. Coating work shall not commence until corrective action has been taken. Commencement of coating work prior to the taking of correctable action shall preclude any subsequent claim by the SELLER. The BUYER may require corrective action at the SELLER's expense.

7.3.2 Prior to blast cleaning items to be coated, they shall be visibly dry with the surface temperature of at least 5°F above the dew point. When using automatic blasting equipment that recycles steel abrasive, the steel need only be visibly dry.

7.3.3 All surfaces to be coated shall be pre-cleaned per SSPC SP 1 where oil, grease, and other contaminants are present.

7.3.4 Abrasives shall meet the requirements of Section 6.6.

7.3.5 Surfaces to be coated shall be blast cleaned in accordance with the surface preparation requirements specified in Appendix D (e.g., SSPC SP10). Where abrasive blasting will damage the items or is impractical, SSPC-SP11 Power Tool Cleaning to bare Metal may be substituted only in limited areas and only with BUYER's permission to proceed (e.g. SDDR).

7.3.6 Abrasive blasting carbon steel shall result in an angular surface profile 1.5 to 3.0 mils deep as measured using a profile comparator or Testex Press-O-Film replication tape, in accordance with ASTM D4417 method A or C.

7.3.6.1 Methods established for measuring surface profile produced by abrasive blast cleaning are not valid or conclusive on surfaces that are excessively rough prior to blast cleaning (e.g. rough mill finishes, heavy rusting or pitting [SSPC-VIS 1 Condition D or rougher], cast surfaces, weld beads or physically damaged surfaces). Therefore, to accurately determine the surface profile produced by blast cleaning, profile measurements shall be taken in areas exhibiting the least surface roughness. For example, SSPC-VIS 1 pre-blast Conditions A, B or C typically result in a blasted surface that is acceptable for surface profile measurement.

7.3.6.2 If excessive surface roughness covers the entire item, then a smooth, clean ASTM A36 steel plate (e.g., SSPC-VIS 1 Condition A, B or C), approximately 6 inch square and at least $^1/_4$ inch thick, shall be blasted using the identical abrasive, pressure, nozzle, blasting equipment and method used on the actual item. The surface profile measured on the smooth plate is regarded as an accurate measurement of the profile produced by that blasting method, and shall be recorded as the surface profile for the actual item. A new plate shall be blasted and measured at a frequency accepted in the SELLER'S procedures (refer to Section 8.1.9).

7.3.7 Recycled abrasive blasting using a steel grit/shot mix is acceptable. The maximum amount of shot in the original mix shall be 50%. All additions of abrasive shall be steel grit. The stabilized working mix shall be maintained by frequent small additions of new grit abrasive commensurate with consumption. Infrequent

large additions of grit shall be avoided. Steel grit or shot is not acceptable for use on stainless steel surfaces.

7.3.7.1 The working abrasive mix shall be maintained clean of contaminants by continuous effective operations of cleaning machine scalping and air wash separators. Reclaimed grit used for abrasive cleaning shall be tested for the presence of oil/grease by immersing a sample in clean tap water and checking for oil flotation. Tests shall be made at the start of blasting and at a minimum of every four (4) hours thereafter. If oil is evident, the contaminated abrasive shall be cleaned or replaced. All surfaces blasted since the last successful test shall be completely cleaned of contamination then re-blasted using clean abrasive.

7.3.8 Blast cleaning shall not be performed in the immediate area where coating or curing of coated surfaces is in progress. All surfaces and equipment, which are not to be coated, shall be suitably protected from blast cleaning.

7.3.9 Burrs, slivers, scabs, lamination, and weld spatter which become visible after blasting shall be removed. The tools and manner employed to remove weld defects and sharp edges shall not burnish or destroy the profile. If the profile or roughness is reduced, it shall be re-blasted to produce the profile and roughness as required. The exhaust of pneumatic grinders shall not impinge on the cleaned surface. If the surface becomes contaminated, it shall be cleaned of contamination and re- blasted. Carbon steel tools or implements specifically employed for coating surface preparation shall not be used on stainless steel surfaces.

7.3.10 If visible rust occurs or if the cleaned surface becomes wet or otherwise contaminated, these surfaces shall be re-cleaned to the degree specified. Cleaned surfaces remaining uncoated overnight shall be visually reinspected 100% for required cleanliness prior to coating or shall be re-cleaned to the specified cleanliness prior to applying the coating.

7.3.11 After surface preparation is complete and before coating, pressurized air or a vacuum shall be used to remove all dust and abrasive residue. The air shall be clean and dry as verified in accordance with Section 8.1.6 so as not to contaminate the prepared surface.

7.3.12 Machined surfaces shall be wiped with clean solvent before the application of coating and shall be protected from damage due to blasting and coating operations.

7.3.13 Machined portions of pipe flanges and other machined mating faces which will not be exposed after final fit-up shall be masked or covered and protected from surface preparation and coating activities. The remaining part of the flange face and exposed surfaces shall then be blasted and coated (bolt holes need only to be sufficiently coated for visible coverage. No dry film thickness required.).

7.3.14 Equipment shall have all openings plugged, masked, and/or blinded sufficiently to protect internals before abrasive blasting. After the coating operation is complete all internals shall be blown clean and/or vacuumed to remove any dust or abrasive blast media that may have entered the coated equipment.

7.3.15 The abrasive mixture and the compressed air shall be clean, dry, and oil free. Moisture traps, in addition to oil and water extractors mounted on the compressor, shall be used in compressed air lines to remove oil and moisture from air close to the point of use. (Refer to Section 7.3.7.1 and 8.1.6)

7.3.16 All valves, valve actuators and motors that will be shop coated shall be blasted and coated prior to assembly. Areas of assembled items that are not coated prior to assembly and subject to damage during blasting must be carefully protected from abrasive damage or abrasive contamination.

7.4 Coating Application

7.4.1 The coating shall be applied in accordance with reviewed procedures (refer to Section 4.1). The coating manufacturer's recommendations for the application temperature and the curing temperature and times (between coats and after last coat) of the specified material shall become a part of this specification. Application and curing temperatures above or below the limits allowed by this specification (Refer to Section 7.4.4) shall be submitted to the BUYER for review (e.g., SDDR).

7.4.2 Coatings shall be applied using properly sized and type of equipment for the size & complexity of the item being coated. The equipment shall be clean with all components in good working order.

7.4.3 Surfaces that will become inaccessible shall be coated before assembly, tagging, fitting, or welding. Inaccessible surfaces includes lap joint flanges, nozzle necks, lap joint stub ends, lap rings, bolt holes, flanges for exchangers and vessels, and welded joints that become inaccessible after assembly.

7.4.4 Coatings shall be applied only when the surface to be coated is clean and dry. The substrate temperature shall be a minimum of 5°F above the dew point during coating application and until the applied coating is no longer moisture sensitive per the coating manufacturer's published data or written recommendations. The substrate and air temperature during coating application and curing shall be a minimum of 50°F (inorganic zinc primers 40°F) and a maximum of 110°F. The relative humidity during coating application shall not exceed 85 percent. Measure humidity in accordance with ASTM E 337 (Sections 1.0-19.0) or using an alternate method reviewed and accepted by the BUYER. Deviations from the above listed minimum and maximum substrate/air temperature and humidity limits may be allowed when in accordance with the coating manufacturer's published or written recommendations and are accepted by the BUYER. The one firm limit is that the minimum substrate or air temperature shall not be less than 35 °F regardless of the coating manufacturer's published or written recommendations.

7.4.5 The SELLER shall record all batch numbers for each coating component used along with other information necessary for the BUYER to relate the batch to the item for which it was applied. (Refer to Appendix G)

7.4.6 All coatings shall be thoroughly mixed until they are smooth and free from lumps, then strained through a screen of at least 30 mesh. Zinc filled coatings shall be continuously agitated from the time initially mixed and while being applied. Other coating materials shall be mixed in accordance with the coating manufacturer's published recommendations. All multi-component coating materials shall be in pre-measured units. Splitting or breaking down pre-measured units is not permitted. See Section 6.1.4 for requirements for mixing repair materials.

7.4.7 Alternating coats shall have a visible color difference to insure full coverage over previous coats. Touch-up of individual small spots < 6 sq. in. do not require a visible color difference when individually marked for repair and the mark remains in place until the repair is accepted.

7.4.8 Dry film thickness of each coating shall be in accordance with Appendix C/Table 1 Acceptable Coating Materials or as specified in the MR. (Refer to Section 8.3.2 & 8.3.3).

7.4.9 Relative to the ambient and surface temperatures the minimum and maximum drying times between coats shall be in strict accordance with the coating manufacturer's latest published technical data sheets.

7.4.10 Runs, sags, voids, drips, overspray, loss of adhesion, bubbling, peeling, or inadequate cure are not permitted. Where possible, defects shall be corrected as detected during application of the coating.

7.4.11 Spray equipment, brushes and rollers shall be cleaned using only manufacturer recommended solvents/cleaners.

7.5 Remedial Work

7.5.1 The completed coating on each item shall have the correct dry film thickness and shall be free of damage and visible defects.

7.5.2 Repair of Dry Film Thickness (DFT) deficiencies

7.5.2.1 Defects such as runs, sags, overspray and embedded particles shall be corrected by sanding to remove the defect. When the defects are in the finish coat, all areas sanded must be overcoated with the finish coat. If the DFT of primer or intermediate coat is reduced to less than the specified minimum, the area shall be abraded with 80 grit sand paper or flapper wheel and an additional layer of coating shall be applied until sufficient thickness is achieved. If noticed during application, the sags or runs may be brushed out.

7.5.3 Repair of Damage

7.5.3.1 All damaged and loosely adhering coating shall be removed and the surface thoroughly cleaned using 80 grit sanding disc, 80-grit flapper wheel or 3M Clean-N-Strip. Edges of the breaks shall be feathered and the resulting surfaces shall be roughened. The designated number of prime and finish coats shall be applied.

7.5.4 Loss of adhesion, delamination blisters, bubbling and fish eyes in the applied coating require the coating to be removed and reapplied in accordance with this specification.

8 Inspection

8.1 General

8.1.1 The SELLER shall have the full responsibility for the coating application quality in accordance with this specification and shall be responsible for stopping work activities when conditions develop that could adversely affect the quality of the completed work. All work is subject to the BUYER's inspection surveillance.

8.1.1.1 All coating work inspection personnel shall be trained, qualified and certified in accordance with the SELLER's reviewed procedures. The inspectors shall meet or exceed the minimum capability requirements for a Level I coatings inspector as described in ASTM D4537 Section 6.2. The SELLER's inspector training, qualification and certification procedures and plan shall include classroom training on the WTP project specification, and the SELLER's reviewed procedures using the guidelines provided in ASTM D5498. The SELLER's inspector must demonstrate his/her capability of using the inspection equipment and performing all the required inspections. Additional coating work inspection guidance is found in ASTM D3276 and ASTM D6237 which may also be used in developing procedures for training and certifying coating work inspectors.

8.1.2 The BUYER representative shall be the final authority on the specification compliance for surface preparation and material application. Any coating, which in the BUYER representative's judgment, has not been applied in conformance with this specification, shall be rejected.

8.1.3 The BUYER representative shall have access to each part of the process and shall have the right and opportunity to witness any of the Quality Control Tests.

8.1.4 The SELLER shall furnish the necessary testing and inspection instruments, properly calibrated and maintained. If equipment is suspected of being out of calibration, it shall be re-calibrated and certificates made available for verification to the BUYER. Such equipment shall be available for use by the BUYER in conducting surveillance of the work. Calibration of testing and Inspection instruments shall be traceable to NIST or Buyer authorized alternative standards.

8.1.5 The SELLER shall halt the coating work and make corrections to the procedures, as necessary to correct repetitive faults found in the work.

8.1.6 Prior to using compressed air, the quality of the air downstream of the separator shall be tested in accordance with the requirements of ASTM D4285 by blowing the air onto a clean white blotter or cloth for two (2) minutes at a distance of no more than (12) inches to check for any contamination, oil, or moisture. "This test shall be performed at the start of work and every 4 hours thereafter". The test shall also be made after any interruption of the air compressor operation or as required by the BUYER. The air shall be used only if the test indicates no visible contamination, oil, or moisture. If contaminants are evident, the equipment deficiencies shall be corrected and the air stream shall be re-tested. Moisture separators shall be bled continuously. All lines shall be tested individually prior to use. Surfaces determined to have been blown down or blasted with contaminated air shall be cleaned of all contamination then re-blasted with clean air and abrasive. Coatings determined to have been applied using contaminated air shall be removed and reapplied using clean air.

8.1.7 Inspection points shall be established as follows:

- Prior to the start of work.
- Immediately following the surface preparation
- Immediately prior to the coating application
- Following the application of each coat
- Following the curing of the coating
- Final inspection and sign-off, in accordance with the project requirements

8.1.8 Any defects disclosed by inspection shall be re-inspected after correction.

8.1.9 The SELLER shall keep the records indicated below, and submit these records to the BUYER (refer to Section 4.6 and Appendix G). The following lists the frequencies:

Coating/Inspection Step		Required Frequency
1.	Pre-Surface Prep	100% visual on Pre- Surface
	Surface Preparation	100% on Surface Prep/Cleanliness
	Profile	Profile first item of each type per shift and every 20 items thereafter or other frequency as BUYER accepted in SELLER's procedures.
2.	Environmental Air Quality	At the start of each work and every 4 hours thereafter or more often during changing conditions.
3.	Recirculated Abrasive	At the start of work and every 4 hours thereafter

4.	Thickness Per SSPC PA2	On large items five (5) spot reading per 100 sq.ft. On items < 100 sq.ft. four (4) spot readings On items less than 4" (valves, fittings, components, etc) two (2) spot readings, For repair spots < 6 sq. inches and > 1 sq. inch. Two (2) spot readings For repair spots < 1 sq. inch one (1) spot reading For small chips/nicks/scratches and pinhole size repair spots need only a visual. For complex surfaces such as structural steel (steel beams) the frequency of dry film thickness readings shall be in accordance with SSPC-PA2 Appendix 3 section A3.4.1 excluding any readings on the flange toes. In accordance with figure A.3 "The Surface of a Steel Beam" the following locations are acceptable for the test readings- 1, 3, 4, 5, 7, 9, 10 and 11; and the following locations are excluded from test readings- 2, 6, 8, 12. For beams less than 20'-0" two (2) sets of 8 spot readings shall be taken. For beams 20'-0" thru 60'-0" three (3) sets of 8 spot readings shall be taken.
5.	Visual on Applied Coating.	100% of all items

8.2 Surface Preparation Inspection

8.2.1 Verify environmental conditions and compressed air quality (refer to Section 7.3.2, 8.1.6).

8.2.2 Verify recirculated grit is grease and oil free (refer to Section 7.3.7).

8.2.3 Verify surface cleanliness and profile (refer to Sections 7.3.5, 7.3.6 and 8.1.9).

8.2.4 Grease free chalk shall be used to mark local areas, which do not meet the specified requirements (e.g., soapstone and crayons are not acceptable).

8.3 Coating Application

8.3.1 Environmental conditions and compressed air quality shall be verified per Sections 7.3.2, 7.4.4, 8.1.6 and 8.1.9.

8.3.2 Dry coating thickness (DFT) shall be measured with a magnetic film thickness gage such as an Elektro-Physik "Mikrotest" or Positector 2000, Positector 6000 or BUYER authorized equal in accordance with SSPC PA2. The number and location of dry film thickness readings shall be in accordance with section 8.1.9.4.

8.3.2.1 The gage shall have an appropriate range that is suitable to measure the thickness expected and record calibration accuracy in accordance with SSPC PA 2 at the start of work, against certified coating thickness calibration standards for non-magnetic coating of steel, traceable to NIST or BUYER authorized alternative

standards. The calibration standards shall be in date, and 1.5 mil to 20.0 mil range, unless otherwise specified.

8.3.3 Any surface with a measured thickness outside of the limits described in Section 7.4.8 shall be rejected. These areas shall be reworked or re-cleaned and re-coated at the SELLER's expense. The average of the required number of readings shall be within the specified dry film thickness range. Any of the required spot readings may be as low as 80% of the minimum specified or 120% of the maximum specified as long as the average of all the readings is within the specified range. An individual spot reading that conforms to this criteria conforms to the specified dry film thickness.

9 Storage, Handling and Shipping

9.1 Coating Materials

9.1.1 Coating materials shall not be stored in direct sunlight or exposed to inclement weather (e.g. rain, snow, sleet, freezing rain, dew point condensation, see also Section 9.1.5). Materials shall remain under cover until ready to use.

9.1.3 Coating material shall be delivered in manufacturer's original unopened containers. Each container shall be clearly identified with the manufacturer's name, product designation, batch number, date of manufacture and shelf life expiration date.

9.1.4 The maximum shelf life allowed for coating materials used on the WTP project is 24 months from the date of their manufacture. Coating materials that are older than 24 months or that exceed the manufacturer's published shelf life, if less than 24 months, shall not be used and shall be placed on HOLD and segregated from other coating materials. A one-time shelf life extension of no less than three (3) months and no more than six (6) months, may be issued by the coating manufacturer. The shelf life extension shall be based on laboratory testing of retain samples taken at the time of manufacture or by testing a sample provided from the actual coating material in question. Where testing verifies an outdated coating material still complies with its original design criteria, it is acceptable for shelf life extension. Expiration date stickers, provided by the coating manufacturer, shall be affixed to each container prior to release from HOLD. The stickers shall include the product number, batch/lot number, the new expiration date and suitably marked to indicate that they came from the coating manufacturer. A new Appendix F shall be provided by the coating manufacturer that includes the test results and specifically indicates it was provided to document shelf life extension including new expiration date. Coating materials that have not been stored or handled in accordance with Sections 9.1.5, 9.1.6, 9.1.7 and 9.1.8, may not have their shelf life extended.

9.1.5 Coating material shall be protected from moisture, direct sunlight and temperatures below 40°F or above 100°F unless otherwise allowed by the coating manufacturer's latest published instructions and verified by the BUYER.

9.1.6 Coating material containers where the airtight seal has been broken or any of the contents are lost, shall not be used and shall be clearly marked and segregated from useable coating material.

9.1.7 Coating material containers shall not be opened except for immediate use.

9.1.8 Unused material shall be returned to storage as soon as possible at the end of each workday. Materials left out for more than eight (8) hours in an uncontrolled storage area (areas without environmental controls that are exposed to ambient weather) shall not be used and shall be clearly marked and segregated from useable coating material.

9.1.9 All required coating material certifications (Appendix F forms) for each batch of material delivered to the SELLER shall be available at the time of material receipt. Materials delivered to the shop without the required documentation shall not be used and the SELLER shall tag and place discrepant materials into a hold area clearly separated from acceptable material. Once required documentation is received or otherwise corrected and found to be acceptable, the discrepant material may then be taken off hold status and used.

9.2 Steel Items and Equipment

9.2.1 The SELLER shall be solely responsible for the condition of the steel items and equipment from the time they are received until they have been delivered to the BUYER.

9.2.2 All booms, hooks, clamps, forks, supports, and skids used in handling or storing coated items shall be designed and maintained in such a manner as to prevent any damage to the items or to the coating and shall be reviewed by the BUYER's representative. Chains and wire rope in direct contact with the coated items are not acceptable. Fabric lifting and tie down straps shall be used.

9.2.3 The SELLER shall inspect all items upon receipt for shipping and handling damage. Any visible damage observed at this point shall be noted on the receipt inspection report.

9.2.4 All coated steel items and equipment shall be stored on padded supports as necessary to preclude damage to the coating. The supports shall be properly spaced and leveled.

9.2.5 The BUYER's representative will have authority to stop any storage or handling activity, if there is a possibility of damage to the coating.

9.2.6 All steel items and equipment damaged by the SELLER shall be repaired in accordance with the specification at the SELLER's expense. Only repair procedures reviewed by the BUYER shall be used.

10 Documentation

10.1 The SELLER shall provide a record of all materials used (related to individual batch number- refer to Appendix F).

10.2 The SELLER shall provide a record of all required daily inspections (Example- Appendix G) that includes pre-surface preparation, compressed air cleanliness, environmental conditions, surface preparation and roughness, location of field repairs coated, application, visual inspection, dry film thickness, holiday testing and all touch-up/repair. This record shall include the coating and thinner materials used and the ID of the items coated to provide traceability.

10.3 All quality documentation shall be available for review by the BUYER representative within 24 hours from the time it is generated.

10.4 SELLER documentation forms or the way that the actual work will be documented shall be provided by the SELLER as part of the procedures submittal for review by the BUYER.

10.5 Documentation shall be submitted in accordance with the requirements listed in Section 3 of the Material Requisition (MR).

Appendix C of Attachment B
Materials/Coating Systems

TABLE 1 - PREQUALIFIED COATING PRODUCTS

Coating Number	Generic Products	Dry Film Thickness (mils)	Ameron	Carboline	Devoe	Dudick	Inter-national	Sherwin Williams
P02	Organic Zinc Epoxy Primer	3.0-5.0	Amercoat 68HS	Carbozinc 859	313	None	Interzinc 52	Zinc Clad IV
P04	High Build Epoxy	4.0-6.0	Amercoat 385	Carboguard 890	224HS	Protecto-Coat 330 or 300	Intergard 475HS	Macropoxy 646

NOTES to Table 1, Appendix C:

1) All versions of the above coating materials shall comply the WTP project VOC requirements of 3.8 lbs./gal and shall also comply with more restrictive local VOC requirements where the work is being performed. In the event the listed coating materials or acceptable versions of the listed coating materials do not meet the local VOC requirements an alternate VOC compliant material may be submitted for review.

TABLE 2 – COATING SYSTEM CODES

SYSTEM CODE	D
COAT 1	P02
COAT 2	P04
COAT 3	P04
COAT 4	

NOTES to Table 2, Appendix C:

1) The surface preparation for all coating systems shall be SSPC SP10 Near White Blast with a surface profile of 1.5 to 3.0 mils unless otherwise noted in this specification or the material requisition.

*1a) System Code D shall be used for all carbon steel and cast ductile iron surfaces, including the mounting frame (skid). Only the exterior of the housing shall be coated. All stainless steel surfaces shall remain uncoated.

*1b) For shipment and storage, blow into the housing a sufficient quantity of Cortec 307 Powder needed for the housing volume, followed by sealing the housing with steel blind flanges (six-bolt pattern, with rubber gasket) to reduce corrosion in the housing interior. An alternate vapor inhibitor product may be submitted to BUYER for review and acceptance.

Appendix D of Attachment B Coating Schedule

No.	Item – Component	System Code (Note 1)	Surface Prep. SSPC		1st Coat	DFT in mils	2nd Coat	DFT in mils	3rd Coat	DFT in mils	Color
			Initial	Repair							
8.20	Miscellaneous Mechanical Equipment-Interior	D	SP10	SP11	P02	3.0-5.0	P04	4.0-6.0	P04	4.0-6.0	ANSI 70 Gray

Notes to APPENDIX D

5. Flange surface (except gasket surfaces) & boltholes shall be cleaned and coated the same as the adjacent component.
8. Individual components of skid-mounted units shall be coated as noted for each individual item listed in Appendix D.
9. Complete details of the Manufacturer's Standard coating system shall be submitted for review. Refer to Section 6.2.

Appendix E is not applicable to this specification.

Appendix F of Attachment B
Coating Manufacturer's Product Identity Certification Record

Project Name: _____ Coating Manufacturer: _____
Project Number: _____ Purchase Order Number: _____
Project Location: _____ Contract Number: _____
Coating Applicator: _____ Generic Coating Type: _____
Product Name: _____ Product Number: _____

(For multi-component products, provide data for all components on one or more Appendix F forms).
(Provide the standard range and actual batch values for each test)

TEST RESULTS		Component A Batch No.		Component B Batch No.	
Test	**Test Method Used**	**Standard Range**	**Batch Actual**	**Standard Range**	**Batch Actual**
Weight per Gallon					
Viscosity					
Flash Point (Typical)					
% Solids by Volume (Typical)					
Cure to recoat time @ 50F, 70F, & 90F (typical)					
Batch Size					
Date of Mfg.					
Shelf Life					
Expiration Date					

COMMENTS:

I hereby certify that the coating materials described above were manufactured with the same formulation, raw materials, production methods, and quality control standards as the coating materials originally tested and/or accepted for use at the River Protection Project-Waste Treatment Plant (WTP) Project site, located in the 200 East Area of the Hanford Site in Washington State in accordance with the requirements of WTP specification 24590-WTP-3PS-AFPS-T0001, 24590-WTP-3PS-AFPS-T0003,24590-WTP-3PS-AFPS-T0004, 24590-WTP-3PS-AFPS-T0006 and 24590-WTP-3PS-PX04-T0004.

Signed: _____ Date: _____
Title: _____ Company: _____

Appendix G of Attachment B
Surface Preparation and Coating Inspection Form

Page __ of ___

REPORT NO:_____ DATE: _____
PROJECT:_____ DAY: M T W T F S S
SUBCONTRACTOR/SELLER:_____ SHIFT: _____
EQUIPMENT/AREA:_____ INSPECTOR: _____
SUBSTRATE: STEEL/CONCRETE/OTHER-_____ COATING SPEC NO/REV:_____
ENVIRONMENTAL CONDITIONS:

WORK ACTIVITY						
TIME						
DRY BULB TEMP. °F						
WET BULB TEMP. °F						
RH %						
DEW POINT °F						
SURFACE TEMP. °F						
BLOTTER TEST						

PRE-SURFACE PREPARATION:
SP-1:_____ MASKING/PROTECTION:_____ SURFACE DEFECTS:_____

SURFACE PREPARATION:
METHOD:_____ ABRASIVE TYPE/SIZE/STORAGE:_____
CLEANLINESS SPEC:_____ ACTUAL:_____PROFILE SPEC:_____ ACTUAL:_____
EQUIPMENT:_____

COATING MATERIALS & MIXING:
PRODUCT(S)_____
BATCH NO(S)/QUANTITIES/EXPIRATION DATE:_____
THINNERS/THINNING RATIO:_____
STORAGE:_____ MIXING: _____ INDUCTION TIME:_____
MATERIAL TEMPERATURE:_____ POT LIFE EXPIRATION TIME:_____
COATING/LINING APPLICATION START TIME:_____ FINISH TIME:_____
COAT: PRIMER/PRIMER T.U./SECOND/SECOND T.U./THIRD/THIRD T.U./OTHER
METHOD:_____ WFT:_____ RECOAT TIME/TEMP:_____ CURE TIME/TEMP:_____
EQUIPMENT:_____

APPLIED COATING:
VISUAL INSPECTION (FILM IMPERFECTIONS):_____
DRY FILM THICKNESS: SPEC:_____ ACTUAL:_____ METHOD:_____
HOLIDAY TEST:_____ METHOD:_____ OTHER TESTING:_____ METHOD:_____
TOUCH-UP AND REPAIR:_____ FINAL CURE:_____

COMMENTS: (*Use reverse side or attach extra pages*)

_____
INSPECTOR'S SIGNATURE/DATE

Appendix H of Attachment B
Manufacturer's Standard Coating Data Sheet

The SELLER proposes the following Manufacturer's Standard (Mfg. Std.) or alternate coating system that is suitable for the exposure conditions of steel items and equipment in radiation and non-radiation areas.

1. ^**Equipment Description:** _____
   A. Tag Number_____
   B. Part(s) i.e. skirt, shell, channels, lugs, etc.* _____
   C. Design/Operating Temperatures, designate °F or °C .... _____ °F _____ °C
   D. Does Equipment Receive Steam out (Yes/No), Temperature _____ °F _____ °C
   E. Insulated/Uninsulated _____
   F. Fireproofing (Yes/No) _____
   ^G. Carbon Steel (CS), Stainless Steel (SS), other (List) _____
2. ^**Seller:** _____
3. ^**Surface Preparation:** SSPC No./Profile _____
4. **Coating System Designation:** (Code)

	First Coat	Second Coat	Third Coat
^A. Type of Coating.....	_____	_____	_____
^B. Coating Mfg./No.**	_____	_____	_____
^C. Dry Film Thickness (Min/Max in mils)/(µm) ...	_____	_____	_____
D. Wet/Film Thickness (Min/Max in mils)/(µm)	_____	_____	_____
E. Curing Method.....	_____	_____	_____
^F. Color.....	_____	_____	_____
G. Dry to Recoat	_____	_____	_____
H. Pot Life	_____	_____	_____
L. Thinner / %	_____	_____	_____

5. **Total DFT of System:** (Mils/µm)(Min/Max)..... _____ / _____ Min. _____ / _____ Max.
6. **Material Storage:** Temperature Requirements (Min/Max) _____ / _____
7. **Shelf Life:** _____ Months
8. **Application Environmental Limits:**
   A. Temperature Ambient and Surface (Min/Max)..... _____ / _____ _____ / _____
   B. Humidity (Min/Max) ..... _____ / _____
   C. Surface Temp ≥5°F above Dew Point temp. (Yes/No)..... _____
9. **Protection of surfaces that will be inaccessible after equipment installation (such as underside of base plates, interior of fans, vessels or equipment housings)** _____
10. **Rust Preventative for machined faces:** (**Mfg./No.) _____
11. **Quantity of touch-up coating supplied:** *None*
12. **Additional information:** (attach extra page as necessary) _____

* Use additional copies of this form for each part described in 1 above that requires a different coating system. A completed copy of this data sheet shall be submitted to CONTRACTOR/BUYER with the initial vendor data submittal.

** Include manufacturer's technical data sheets and MSDS for each proposed coating & preservative.

^ Mandatory data entry. Other entries should be completed where information is available from sub vendor or from coating material technical data sheets.

ISSUED BY
RPP-WTP PDC

R11204284

CENTRIFUGAL MULTI-STAGE BLOWER
Data Sheet:
24590-HLW-MAD-HOP-00018

MR No. 24590-QL-MRA-MACS-00004

Plant Item No. 24590-HLW-MA-HOP-FAN-00001A/B/C 24590-HLW-MA-HOP-FAN-00009A/B/C

Rev. No. 9

1	Project:	RPP-WTP	Bldg./Room #	HLW / H-B001C	Manufacturer	*	
2	Project No:	24590	Supporting Calculations	24590-HLW-M4C-HOP-00011	Manufacturer Part No	*	
3	Site:	DOE Hanford					
4	Safety Class	SS	Supporting Drawings	24590-HLW-M6-HOP-00003 24590-HLW-M6-HOP-20003	Quantity Required	6	
5	Seismic Category (Note 26)	SC-III					
6	SSC Characteristic	Air Permit	System Description	24590-HLW-3YD-HOP-00001	Quality Level	Q	
7	System No.	HOP					
8	Description: HLW Booster Extraction Fans - Note 15						
9	**DESIGN CONDITIONS**						
10	Indoor Design Temperature	Minimum 59 °F	Maximum 83 °F	Relative Humidity	10% (min)		
11	Contamination Classification Area	C2		Elevation	661 ft above MSL		
12	Environmental Qualification	(See Attachment 2)	Hanford Standard Atmospheric Pressure		398	inches WC	
13	**DESIGN OPERATING CONDITIONS**						
14	Design Blower Capacity (Note 23)	1600	ACFM	Inlet Air Temperature at Design Conditions	160	°F	
15	Design Static Pressure (Note 12)	85	inches WC	Inlet Air Density at Design Conditions	0.0471	lbs/ft³	
16	Minimum Blower Efficiency at Design Conditions	60	%	Inlet Pressure at Design Conditions	11.3	psia	
17	Blower Efficiency at Design Conditions	*	%	Power at Design Conditions	*	BHP	
18	Blower Speed at Design Conditions (Note 24)	*	RPM	Equipment Design Temperature (Note 21)	*	°F	
19	Max. Discharge Temp. at Design conditions	*	°F	Critical Speeds (Note 20)	*	RPM	
20	**CONSTRUCTION**						
21	Blower Manufacturer	*		Blower Model Number	*		
22	AMCA Drive Arrangement	7		AMCA Inlet Box Position	360		
23	AMCA Motor Position	Direct Drive		AMCA Discharge	CW 360		
24	AMCA Rotation (Note 9)	CW		Blower Scroll Type	*		
25	Blower Motor Operating Weight	*	pounds	Assembly Weight (Mtr+ Blower + Base)	*	pounds	
26	Overall Skid Dimensions (Note 5)	Width *		Height *	Length *	inches	
27	Blower Bearing Type	Roller- Grease Lubricated		Blower Bearing Mfg. *	Bearing Part #	*	
28	Lubricant Mfg. *	Part # *		Bearing Special Features (Notes 18 & 19)	L10 Life 100 khr		
29	Mechanical Coupling Mfg. *	Part # *					
30	**BLOWER WHEEL**						
31	Blower Wheel Type (Note 4)	*		Blower Shaft Diameter	*		
32	Design Wheel Diameter	*		Actual Wheel Diameter	*		
33	Design Wheel Width	*		Actual Wheel Width	*		
34	Design Blower RPM	*		Actual Blower RPM	*		
35	Design Brake Horsepower	*		Actual Brake Horsepower	*		
36	**BLOWER MATERIALS**						
37	Housing (Note 14 & 27)	Cast Ductile Iron	Grade *	Blower Wheel	Stainless Steel	Grade	*
38		N/A	Grade N/A	Mounting Frame	Carbon Steel	Grade	*
39	Shaft	Stainless Steel	Grade *	Inlet Box / Transition Piece	Cast Ductile Iron	Grade	*
40	Inlet Vane	N/A	Grade N/A	Discharge Damper	N/A	Grade	N/A
41	Inlet Screen	N/A	Grade N/A	OSHA Compatible Safety Guards	Carbon Steel	Grade	*
42	**BLOWER ACCESSORIES**						
43	Flanged Inlet	Yes		Flanged Inlet Dimensions	*		
44	Flanged Discharge	Yes		Flanged Discharge Dimensions	*		
45	Flanged Discharge Evase	No		Flanged Discharge Evase Dimensions	N/A		
46	Split Housing	No		Split Housing Type	N/A		
47	Inlet Box	No		Inlet Box Type	N/A		
48	Inlet Damper	No		Inlet Damper Type	N/A		
49	Inlet Transition Piece	No		Inlet Transition Piece Flange Dimensions	N/A		
50	Inspection Door (Note 7)	Yes		Inspection Door Size (Note 7)	1" NPT		
51	Drain Connection (Note 7)	Yes		Drain Connection Size (Note 7)	1" NPT		
52	Shaft Seals	Yes		Seal Type	Double Carbon Ring w/ purge		
53	Isolation Base	No		Isolation Base Type	N/A		
54				Isolation Base Manufacturer	N/A		
55	Isolation Springs	No		Isolation Springs Mfr and Model No	N/A		
56				Isolation Springs Minimum Diameter	N/A		
57				Isolation Springs Deflection	N/A		
58				Isolation Springs Restraint Features	N/A		
59	Flexible Connection Inlet (Note 6 & 25)	Yes		Insulation (Note 22)	Yes		
60	Flexible Connection Inlet Type	Braided SSTL flexible hose					
61	Flexible Inlet Connection Material	316L SS		braid constructed with 304 SST			
62	Flexible Connection Manufacturer and Model No	*					
63	Flexible Connection Outlet (Note 6 & 25)	Yes					
64	Flexible Connection Outlet Type	Braided SSTL flexible hose					
65	Flexible Outlet Connection Material	316L SS		braid constructed with 304 SST			
66	Flexible Connection Manufacturer and Model No	*					

CENTRIFUGAL MULTI-STAGE BLOWER
Data Sheet:
24590-HLW-MAD-HOP-00018

				MR No. 24590-QL-MRA-MACS-00004		
				Plant Item No. 24590-HLW-MA-HOP-FAN-00001A/B/C 24590-HLW-MA-HOP-FAN-00009A/B/C		Rev. No. 9
1	Project:	RPP-WTP	Bldg./Room #	HLW / H-B001C	Manufacturer	*
2	Project No:	24590	Supporting Calculations	24590-HLW-M4C-HOP-00011	Manufacturer Part No	*
3	Site:	DOE Hanford				
4	Safety Class	SS	Supporting Drawings	24590-HLW-M6-HOP-00003 24590-HLW-M6-HOP-20003	Quantity Required	6
5	Seismic Category (Note 26)	SC-III				
6	SSC Characteristic	Air Permit	System Description	24590-HLW-3YD-HOP-00001	Quality Level	Q
7	System No.	HOP				
8	Description: **HLW Booster Extraction Fans - Note 15**					
9	Inlet Screen	No				
10	Inlet Screen Features	N/A				
11	Blower Pedestal	Yes				
12	Blower Pedestal Description	**Common mounting base for Blower, motor, and bearings**				
13	Insulation Studs	No				
14	Silencer	No				

15 **MOTOR AND DRIVE REQUIREMENTS**

16 Driven Equipment / Motor / ASD relationship is as follows::

	Blower Tag Number	Motor Tag Number	ASD Tag Number
17			
18	HOP-FAN-00001A	HOP-MTR-00005A	HOP-ASD-00001A
19	HOP-FAN-00001B	HOP-MTR-00005B	HOP-ASD-00001B
20	HOP-FAN-00001C	HOP-MTR-00005C	HOP-ASD-00001C
21	HOP-FAN-00009A	HOP-MTR-00006A	HOP-ASD-00003A
22	HOP-FAN-00009B	HOP-MTR-00006B	HOP-ASD-00003B
23	HOP-FAN-00009C	HOP-MTR-00006C	HOP-ASD-00003C

24	Adjustable Speed Drive	Yes	Provided by others.
25	Special Drive Features	**1. ASD to operate motor from 30% to 100% of required RPM within a 30 second time frame (max)**	
26		**2. Provides ASD programming for motor RPM to pass through any critical speed dead bands to avoid excessive vibration.**	

27 GAS COMPOSITION

	Component	kg/hr	wt%
28			
29	N_2	2138	6.73E+01
30	O_2	655.2	2.06E+01
31	H_2O	324.6	1.02E+01
32	Ar	36.5	1.15E+00
33	CO_2	20.5	6.46E-01
34	NO	5.79E-01	1.82E-02
35	Hg	1.25E-01	3.94E-03
36	NO_2	9.66E-02	3.04E-03
37	CO	1.70E-02	5.35E-04
38	N_2O	1.25E-02	3.94E-04
39	SO_2	6.70E-03	2.11E-04
40	HCl	6.58E-03	2.07E-04
41	NH_3	4.37E-03	1.38E-04
42	HF	3.99E-03	1.26E-04
43	H_2	3.53E-03	1.11E-04
44	VOC	2.76E-03	8.69E-05
45	I_2	1.11E-03	3.50E-05
46	Particulate	4.34E-11	1.37E-12
55	Total	3175.66	100

56

57 **Source: 24590-HLW-M4E-HOP-00001 pages 14-16 row 35**

58

59 **Notes**

60 1) * Denotes data to be provided / verified by vendor.
61 2) N/A denotes "Not Applicable".
62 3) TBD denotes "To Be Determined".
63 4) The impeller shall be anti-surge design developing continuously rising SP from free delivery thru shutoff.
64 5) Bounding dimensions not to exceed 68" W x 60" H x 105" L (Blower, Motor and Baseplate).
65 6) Connections shall match Buyer's supply pipe: 10 inch diameter, 316L SS, Schedule 40S, w/ 150 lb. RF Flange.
66 7) See Specification 24590-WTP-3PS-MACS-T0005 Rev. 0, Section 3.8.2 for requirements.
67 8) Deleted
68 9) Rotation is listed as viewed from drive side.
69 10) Deleted
70 11) Deleted
71 12) The External Static Pressure at design operating condition includes 2 in. WC maximum drop through the inlet box.
72 The more conservative value of 85 inches WC was used rather than the minimum value 81 inches WC in 24590-HLW-M4C-HOP-00011 Rev. 1.
73 13) Deleted
74 14) Blower housing design pressure shall be -6 psi (-166 in WC).
75 15) Contents of this document are Dangerous Waste Permit affecting.
76 16) Deleted
77 17) Deleted
78 18) Provide each blower bearing with RTDs & 2 - directional (X and Y) vibration sensors for remote indication
79 19) Radial type roller bearings shall have labyrinth type seal.

CENTRIFUGAL MULTI-STAGE BLOWER
Data Sheet:
24590-HLW-MAD-HOP-00018

MR No.
24590-QL-MRA-MACS-00004

Plant Item No.
24590-HLW-MA-HOP-FAN-00001A/B/C
24590-HLW-MA-HOP-FAN-00009A/B/C

Rev. No
9

1	Project:	RPP-WTP	Bldg./Room #	HLW / H-B001C	Manufacturer	*	
2	Project No:	24590	Supporting Calculations		Manufacturer	*	
3	Site:	DOE Hanford		24590-HLW-M4C-HOP-00011	Part No		
4	Safety Class	SS	Supporting Drawings	24590-HLW-M6-HOP-00003	Quantity	6	
5	Seismic Category (Note 26)	SC-III		24590-HLW-M6-HOP-20003	Required		
6	SSC Characteristic	Air Permit	System Description	24590-HLW-3YD-HOP-00001	Quality Level	Q	
7	System No.	HOP					

8 Description: **HLW Booster Extraction Fans - Note 15**

9 20) Critical speeds within operating ranges to be blocked in ASD programming

10 21) This temperature is required for material selection and corrosion analysis. The value is the average temperature of the inlet temperature in line 14 of page 1 and the Discharge Temperature on Line 19 of page 1.

11 22) Blowers shall be insulated (except bearing housings) by Buyer and heat traced to maintain casing metal temperature above the acid dewpoint of the process gas.

12 23) Design blower capacity is the predicted capacity from calculation, 24590-HLW-M4C-HOP-00011 Rev 1 page A-10 cell Y-32 divided by 2 (two blower running at capacity) plus a 30 % contingency. 2461 ACFM/2*1.3 = 1600 ACFM

13 24) Shaft speed shall not exceed 3600 rpm unless approved by Buyer. Tip speed of rotating assembly shall not exceed 530 fps unless approved by Buyer.

14 25) See Specification 24590-WTP-3PS-MACS-T0005 rev. 0, section 3.8.1.6 for flexible connection requirements.

15 26) See Specification 24590-WTP-3PS-MACS-T0005 rev. 0, section 6.3 for seismic testing requirements.

16 27) Housing will be fabricated from ductile iron or high chromium cast iron (or better).

17

18

19 **SAFETY SCREENING** _X_ Yes ___ No

20 **Safety Screening / Evaluation Required? If yes per 24590-WTP-GPP-SREG-002, E&NS Signature required below.**

21

22

23

24

25

26

27

28

29

30

31

32

33

34

9	**Revised to incorporate new specification 24590-WTP-3PS-MACS-T0005, Rev. 0 to remove ASME AG-1 requirements. Other minor clarifications are as noted with revision bars. This data sheet is issued for quote.**	M.O.	M. Summers	C. Meng	AM	[illegible]	R. E. Stevens	5/12/10
8	Reissued for Purchase. Minor Change (Inclusion of pages 5 & 6 which were omitted in Rev. 7).	M. O'Neill	M. Summers	C. Meng	D.Lamberd	S. Kretzschmar	R. E. Stevens	7/22/2009
	Reissued for purchase. Minor revisions to format for clarity. Revised the Material Requisition number from 24590-QL-MRA-MACS-00002 to the new 24590-QL-MRA-MACS-00004. Corrected tag numbers and updated revision number. Changed title to Centrifugal Multi-stage Blowers. Removed reference to cancelled calculation 25490-HLW-MAC-HOP-00001. Added field for SSC Characteristic.							

	CENTRIFUGAL MULTI-STAGE BLOWER **Data Sheet:** **24590-HLW-MAD-HOP-00018**			MR No. **24590-QL-MRA-MACS-00004**			
				Plant Item No. **24590-HLW-MA-HOP-FAN-00001A/B/C** **24590-HLW-MA-HOP-FAN-00009A/B/C**			Rev. No. 9
1	Project:	RPP-WTP	Bldg./Room #	HLW / H-B001C	Manufacturer	*	
2	Project No:	24590	Supporting Calculations	24590-HLW-M4C-HOP-00011	Manufacturer Part No	*	
3	Site:	DOE Hanford					
4	Safety Class	SS	Supporting Drawings	24590-HLW-M6-HOP-00003 24590-HLW-M6-HOP-20003	Quantity Required	6	
5	Seismic Category (Note 26)	**SC-III**					
6	SSC Characteristic	**Air Permit**	System Description	24590-HLW-3YD-HOP-00001	Quality Level	Q	
7	System No.	**HOP**					
8	Description: **HLW Booster Extraction Fans - Note 15**						

Rev	Reason for Revision	System Engineer	Responsible Engineer	E&NS	Checker	Reviewer	Approver	Date
7	Added reference to Note 15. Updated design inlet conditions, capacity, and external static pressure to align with 24590-HLW-M4C-HOP-00011 Rev.1 ECCN 24590-HLW-M4E-HOP-00001. Added field for Inlet Pressure at Design Conditions in place of Total Static Pressure (Max) field. Added field for required minimum efficiency at design conditions per CCN 199933. Retitled field for Maximum Discharge Temperature and deleted Note 16. Retitled field from Natural Frequencies to Critical Speeds for clarity. Removed normal and minimum design conditions for clarity. Revised AMCA Drive Arrangement from 8 to 7 to align with industry offering. Specified inlet box position to 360. Relocated Blower Motor Operating Weight and Assembly Weight fields and ad Specified Roller grease lubricated bearings, added fields for Mfg. and Part # for bearing, lubricant, and couple+B121r. Changed coupler to vendor specified. Revised specified materials for housing, shaft, blower wheel, mounting frame, and inlet box/transistion piece to align with industry offering. Material grades to be specified by vendor. Revised inspection door size and drain from vendor specified to 1"NPT per specification, 24590-WTP-3PS-MACS-T0004 Rev. 5. Revised Split Housing, Inlet Box, & Inlet Transition Piece fields to No. Specified seal type as Double Carbon Ring w/ purge. Added Note 1 to Special Drive Features field. Added Gas Composition and Acid Dew Point. Deleted Notes 8, 10, 13, 16, 17, and revised Notes 7.12, 14, 18, 19, 20, 21, & 22 Added Notes 23, 24, 25, and 26 Change Nuclear Radiation field on motor data sheet to agree with EQD. Revised Design Life on EQD from 5 years to 40 years. Added Note in Additional DBE information field to clarify equipment is not expected to operate submerged.	M. O'Neill	S. E. Anderson	C. Meng	A. Moretta	S. Kretzschmar	R. E. Stevens	6/11/2009
6	Reissued for purchase. Addition of insulation requirement. Incorporation of Vendor exceptions and clarifications.	M. O'Neill	S. E. Anderson	C. Meng	C. Knauss	S. Kretzschmar	R. E. Stevens	9/29/2008
5	Re-issued with updated design conditions, reformatted mechanical datasheet for clarity, attached motor and EQ datasheets. This document supersedes 24590-HLW-MUD-HOP-00001	M. O'Neill	S. E. Anderson	C. Meng	C. Knauss	S. Kretzschmar	R. E. Stevens	3/26/2008
4	Re-issued for purchase, added Note 14, and updated design conditions.	Y. Nurdogan	G. Dunn	C. Meng	D. Reinemann	J. Rouse	J. Julyk	3/21/2007
3	Re-issued for purchase	J.Rewari	N/A	N/A	R. Tometczak	N/A	E. Isern	3/7/2005
2	Re-issued for purchase	J. Rewari	N/A	N/A	R. Tometczak	N/A	E. Isern	12/13/2004
1	Updated design conditions and re-issued for purchase, superseded 24590-HLW-MAD-HOP-00019, 00020, 00035, 00036, and 00037.	J. Rewari	N/A	N/A	J. Medina	N/A	E. Isern	8/12/2004
0	Issued for purchase	D. Green	N/A	N/A	M. Ordona	N/A	H. Jalali	11/17/2003

ATTACHMENT 1 24590-HLW-MAD-HOP-00018 ELECTRICAL DATA SHEET LOW VOLTAGE INDUCTION MOTOR	MR No. 24590-QL-MRA-MACS-00004	
	Plant Item No. 24590-HLW-EM-HOP-MTR-00005A/B/C 24590-HLW-EM-HOP-MTR-00006A/B/C	Rev No. 9

Motor Tag No.: 24590-HLW-EM-HOP-MTR-00005A/B/C and 24590-HLW-EM-HOP-MTR-00006A/B/C

Driven Equipment No.: 24590-HLW-MA-HOP-FAN-00001A/B/C and 24590-HLW-MA-HOP-FAN-00009A/B/C

Service: HLW Booster Extraction Fans

Refer to "Primary Specification": 24590-WTP-3PS-MACS-T0005

LINE NO.	DESCRIPTION	USER SPECIFIED	SUPPLIER FURNISHED	UNITS
	BASIC DATA:			
1	RATED HORSEPOWER	-	*	HP
2	SYNCHRONOUS SPEED	-	*	RPM
3	VOLTAGE	460	*	V
4	PHASE	3	*	-
5	FREQUENCY	60	*	Hz
6	INSULATION CLASS	F	*	-
7	TEMPERATURE RISE ABOVE 40°C AMBIENT	80	*	deg. C
8	NEMA DESIGN TYPE (B, C, OTHER)	B	*	-
9	EFFICIENCY (STANDARD, PREMIUM)	PREMIUM	*	-
10	ENCLOSURE TYPE (TEFC - SEVERE DUTY PER IEEE Std. 841, TENV, WP1I)	TEFC IEEE Std. 841	*	-
11	SERVICE FACTOR	1.15	*	-
12	COUPLED DRIVE (DIRECT, BELT, GEAR)	Direct	*	-
13	BEARING (ANTI-FRICTION, SLEEVE)	Anti-Friction	*	-
14	BEARING SEAL (ONE END, BOTH ENDS)	Both Ends	*	-
15	SPACE HEATER (FOR MOTORS > 20 HP)	Yes	*	W
16	RTD FOR SLEEVE BEARING : 1 per bearing for Belt drive only	N/A	*	Ω
17	TERMINAL BOX LOCATION		*	-
18	WARRANTY (2 YEARS, 3 YEARS, 5 YEARS)	**see Terms and condition**	*	-
19	SHOP TESTS			
	- MFR STANDARD TEST (Yes / No)	Yes	*	
	- ROUTINE TEST (Yes / No)	Yes	*	
	- FULL TEST (Yes / No)	No	*	
20	UNUSUAL SERVICE CONDITIONS:	Inverter Duty		
21	FLAMMABLE OR EXPLOSIVE GASES	No	*	
22	COMBUSTIBLE, EXPLOSIVE, ABRASIVE OR CONDUCTIVE DUST	No	*	
23	WET OR DRY OPERATING CONDITIONS	Dry	*	
24	NUCLEAR RADIATION	0.5 mrad/hr.		
25	SPECIAL PAINTING REQUIREMENTS PER IEEE Std. 841	(Note 5)	*	
26	OTHER (SC,SS, APC, Non-ITS)	SS	*	
27	OTHER (SEISMIC CATEGORY I , II, III or IV)	SC-III	*	

ATTACHMENT 1 24590-HLW-MAD-HOP-00018 ELECTRICAL DATA SHEET LOW VOLTAGE INDUCTION MOTOR	MR No. 24590-QL-MRA-MACS-00004	
	Plant Item No. 24590-HLW-EM-HOP-MTR-00005A/B/C 24590-HLW-EM-HOP-MTR-00006A/B/C	Rev No. 9

Motor Tag No.: 24590-HLW-EM-HOP-MTR-00005A/B/C and 24590-HLW-EM-HOP-MTR-00006A/B/C

Driven Equipment No.: 24590-HLW-MA-HOP-FAN-00001A/B/C and 24590-HLW-MA-HOP-FAN-00009A/B/C

Service: HLW Booster Extraction Fans

Refer to "Primary Specification": 24590-WTP-3PS-MACS-T0005

LINE NO.	DESCRIPTION	USER SPECIFIED	SUPPLIER FURNISHED	UNITS
28	MANUFACTURER	-	*	-
29	NEMA FRAME	-	*	-
30	MODEL NUMBER	-	*	-
31	SERIAL NUMBER / MANUFACTURER DATE	-	*	-
32				
33	FULL LOAD CURRENT	-	*	A
34	FULL LOAD TORQUE	-	*	ft-lb
35	POWER FACTOR : - @ 50 % LOAD	-	*	%
	- @ 75 % LOAD	-	*	%
	- @ 100 % LOAD	-	*	%
36	EFFICIENCY : - @ 50% LOAD	-	*	%
	- @ 75% LOAD	-	*	%
	- @ 100% LOAD	-	*	%
37	LOCKED ROTOR CURRENT @ 100 % of RATED VOLTAGE	-	*	A
38	LOCKED ROTOR CURRENT @ 80% of RATED VOLTAGE	-	*	A
39	ALLOWABLE STALL TIME @ FULL VOLTAGE	-	*	SEC
40	ALLOWABLE STALL TIME @ 80% of VOLTAGE	-	*	SEC
41	LOSSES @ FULL LOAD	-	*	W
42	ROTOR WK2 @ MOTOR SHAFT SPEED (For > 250 hp only)	-	*	lb-ft²
43	STARTING POWER FACTOR (For > 75 hp only)	-	*	-
44	SUB TRANSIENT REACTANCE AND X/R (For > 250 hp only)	-	*	-
45	WEIGHT	-	*	lbs
46	ROTATION (CW, CCW, BI-DIR.) FACING DRIVEN EQUIPMENT	-	*	-
47	MEAN TIME BETWEEN FAILURE (MOTOR 100 HP AND ABOVE)		*	
48	STARTING METHOD (FULL/REDUCED VOLTAGE, ASD APPLICATION)	ASD		-
49				
50	RECOMMENDED BEARING LUBRICANT	-	*	

NOTES:

(1) DELETED

(2) Motor should be applied within its rating based on service factor of 1.0.

(3) Data Sheet Line no. from 35 to 47 are applicable for motor 100 HP and above.

(4) The fan and motor are subjected to the same environmental conditions.

(5) See specifcation **24590-WTP-3PS-MACS-T0005, Attachment B**, for requirements.

EQUIPMENT QUALIFICATION DATASHEET (EQD)

Equipment Identification

Component Tag Number	24590-HLW-MA-HOP-FAN-00001A/B/C 24590-HLW-MA-HOP-FAN-00009A/B/C 24590-HLW-EM-HOP-MTR-00005A/B/C 24590-HLW-EM-HOP-MTR-00006A/B/C	Safety Classification	☐ SC ☒ SS ☐ APC ☐ SDC ☐ SDS ☐ RRC
Manufacturer / Supplier	Note 4		
Requisition Number	24590-QL-MRA-MACS-00004		
Model	Note 4	Seismic Category	☐ SC-I ☐ SC-II ☒ SC-III ☐ SC-IV
Description (include descriptive text [e.g., location, elevation])	HLW Booster Extraction Fans.		
Safety Function(s)	Provides negative pressure on HLW melters and primary off-gas system. In conjunction with Stack Extraction Fans, provides motive force for off-gas flow through all off-gas equipment up to and including discharge at stack.		

Seismic Safety Function	☒ Yes ☐ No	Room Number(s): H-B001C	
Maintenance Accessible	☒ Yes ☐ No	Method of Maintenance Access:	☐ Remote ☒ Hands On ☐ None
Seismic Operability Requirements:	☒ During Seismic Event	☒ After Seismic Event	
ITS Equipment Type:	☐ Passive Mechanical	☒ Active Mechanical	☒ Electrical

Equipment Environmental Qualification (EEQ)

Environment ☒ Mild ☐ Harsh Contamination Class: C2 Radiation Class: R2	Hi Rad Service ☐ Yes ☒ No	Design Life (yrs) ☒ 40 ☐ Other ____ with required maintenance

Parameter Type/Units	Parameter Value	Time Duration (number)	Time Units	WTP Document Number (BUYER)	Submittal Number (SELLER)
Normal					
Normal High Temperature (°F)	83	40	yr	24590-HLW-U0D-W16T-00001	Note 4
Normal Low Temperature (°F)	59	40	yr	24590-HLW-U0D-W16T-00001	Note 4
Normal High Relative Humidity (%RH)	100	40	yr	24590-HLW-U0D-W16T-00001	Note 4
Normal Low Relative Humidity (%RH)	10	40	yr	24590-HLW-U0D-W16T-00001	Note 4
Normal High Pressure (in.-w.g.)	0	40	yr	24590-HLW-U0D-W16T-00001	Note 4
Normal Low Pressure (in.-w.g.)	-0.1	40	yr	24590-HLW-U0D-W16T-00001	Note 4
Normal Radiation Dose Rate (mR/hr)	0.5	40	yr	24590-HLW-U0D-W16T-00001	Note 4
Vibration Magnitude (g)	N/A	40	yr	N/A	Note 4
Vibration Frequency (Hz)	N/A	40	yr	N/A	Note 4
Additional Normal Information:					

EQUIPMENT QUALIFICATION DATASHEET (EQD)

Equipment Environmental Qualification (EEQ) *(continued)*

Parameter Type/Units	Parameter Value	Time Duration (number)	Time units	WTP Document Number (BUYER)	Submittal Number (SELLER)
Abnormal					
Abnormal High Temperature (°F)	95	8	hr/yr	24590-HLW-U0D-W16T-00001	Note 4
Abnormal Low Temperature (°F)	59	8	hr/yr	24590-HLW-U0D-W16T-00001	Note 4
Abnormal High Relative Humidity (%RH)	95	8	hr/yr	24590-HLW-U0D-W16T-00001	Note 4
Abnormal Low Relative Humidity (%RH)	10	8	hr/yr	24590-HLW-U0D-W16T-00001	Note 4
Abnormal High Pressure (in.-w.g.)	4	8	hr/yr	24590-HLW-U0D-W16T-00001	Note 4
Abnormal Low Pressure (in.-w.g.)	-6.7	8	hr/yr	24590-HLW-U0D-W16T-00001	Note 4
Abnormal Radiation Dose Rate (mR/hr)	0.5	0	hr/yr	24590-HLW-U0D-W16T-00001	Note 4
Wet Sprinkler System Present	YES	2	hr/yr	24590-HLW-U0D-W16T-00001	Note 4
Additional Abnormal Information					
Design Basis Events (DBE)					
DBE High Temperature (°F)	95	1000	hr	24590-HLW-U0D-W16T-00001	Note 4
DBE Low Temperature (°F)	59	1000	hr	24590-HLW-U0D-W16T-00001	Note 4
DBE High Relative Humidity (%RH)	95	482	hr	24590-HLW-U0D-W16T-00001	Note 4
DBE Low Relative Humidity (%RH)	10	1000	hr	24590-HLW-U0D-W16T-00001	Note 4
DBE High Pressure (in.-w.g.)	4	1000	hr	24590-HLW-U0D-W16T-00001	Note 4
DBE Low Pressure (in.-w.g.)	-6.7	1000	hr	24590-HLW-U0D-W16T-00001	Note 4
DBE Radiation Dose Rate (mR/hr)	0.5	0	hr	24590-HLW-U0D-W16T-00001	Note 4
Flood Height (ft)	22	1000	hr	24590-HLW-U0D-W16T-00001	Note 4
Submergence (ft)	N/A**	N/A**	N/A	24590-HLW-U0D-W16T-00001	Note 4
Chemical/Spray Exposure	Yes	12.5	hr	24590-HLW-U0D-W16T-00001	Note 4
Additional DBE Information	Spray exposure is composed of water from fire suppression system. **Equipment is not expected to operate submerged or after a DBE flood event				

EQUIPMENT QUALIFICATION DATASHEET (EQD)

DBE Chemical Exposure Details	
DBE Chemical Types/Concentrations	NONE

Interfaces (Electrical)	
Power Supply Voltage (VAC, VDC)	460 VAC
Power Supply Frequency (Hz)	60
Power Connection Method	Note 3
I/O Signals to/from Equipment	Note 3
I/O Connection Method	Note 3

Interfaces (Mechanical)	
Mounting Configuration (orientation)	Note 3
Mounting Method (bolts, welds, etc.)	Isolation springs / base to be welded to existing embeds or anchored into concrete depending on the Seller's anchorage configuration
Auxiliary Devices	None

Equipment Seismic Qualification (ESQ)

Parameter	Title	Reference/Document Number	Version / Revision	Remarks
WTP Seismic Design Specification (BUYER)	ENGINEERING SPECIFICATION FOR STRUCTURAL DESIGN LOADS FOR SEISMIC CATEGORY III & IV EQUIPMENT AND TANKS	24590-WTP-3PS-FB01-T0001	Rev. 3	N/A
Specified Seismic Load (BUYER)	ENGINEERING SPECIFICATION FOR STRUCTURAL DESIGN LOADS FOR SEISMIC CATEGORY III & IV EQUIPMENT AND TANKS	24590-WTP-3PS-FB01-T0001	Rev. 3	N/A
Design Seismic Load (SELLER	N/A	N/A	N/A	To be provided by the Seller via the G-321-E submittal process. (Note 2)
Qualification Method (SELLER)	N/A	N/A	N/A	To be provided by the Seller via the G-321-E submittal process. (Note 2)
Qualification Report Number (SELLER)	N/A	N/A	N/A	To be provided by the Seller via the G-321-E submittal process. (Note 2)
Submittal Number (BUYER)	TBD	TBD	TBD	N/A

EQUIPMENT QUALIFICATION DATASHEET (EQD)

Notes and Additional Information

Note 1: Where pressure is given in inches of water column (in-w.c.) in the source document, it is generally assumed that this is in reference to atmospheric pressure and is therefore equivalent to inches of water gage (in-w.g.).

Note 2: Supplier (Seller) shall perform Equipment Seismic and Environmental Qualification in accordance with the listed parameters and the applicable specification requirements.

Note 3: To be provided by Seller.

Note 4: Data to be provided by Seller through the submittal process as required on the G-321-E form.

Please note that source, special nuclear, and byproduct materials, as defined in the Atomic Energy Act of 1954 (AEA) are regulated at the U. S. Department of Energy (DOE) facilities exclusively by DOE acting pursuant to its AEA authority. DOE asserts that pursuant to AEA, it has sole and exclusive responsibility and authority to regulate source, special nuclear, and byproduct materials at DOE-owned nuclear facilities. Information contained herein on radionuclides is provided for process description purposes only.

ISSUED BY
RPP-WTP PDC

R11204283

CENTRIFUGAL MULTI-STAGE BLOWER
Data Sheet:
24590-HLW-MAD-HOP-00038

MR No. 24590-QL-MRA-MACS-00004

Plant Item No. 24590-HLW-MA-HOP-FAN-00008A/B/C, 24590-HLW-MA-HOP-FAN-00010A/B/C

Rev. No. 5

1	Project:	RPP-WTP	Bldg./Room #	HLW / H-0429	Manufacturer	*	
2	Project No:	24590	Supporting Calculations	24590-HLW-M4C-HOP-00011	Manufacturer Part No	*	
3	Site:	DOE Hanford					
4	Safety Class	SS	Supporting Drawings	24590-HLW-M6-HOP-00008 24590-HLW-M6-HOP-20008	Quantity Required	6	
5	Seismic Category (Note 27)	SC-III					
6	SSC Characteristic	Air Permit	System Description	24590-HLW-3YD-HOP-00001	Quality Level	Q	
7	System No.	HOP					
8	Description: HLW Offgas Stack Extraction Blower - Note 14						
9	**DESIGN CONDITIONS**						
10	Indoor Design Temperature	Minimum 59 °F	Maximum 95 °F	Relative Humidity	10% (min)		
11	Contamination Classification Area	C2/C3		Elevation	740 ft above MSL		
12	Environmental Qualification	(see Attachment 2)	Hanford Standard Atmospheric Pressure		398	inches WC	
13	**DESIGN CONDITIONS**						
14	Design Blower Capacity (Note 22)	2211	ACFM	Inlet Air Temperature at Design Conditions	294	°F	
15	Design Static Pressure (Note 21)	82	inches WC	Inlet Air Density at Design Conditions	0.0408	lbs/ft³	
16	Minimum Blower Efficiency at Design Conditions	60	%	Inlet Air Pressure at Design Conditions	12.1	psia	
17	Blower Efficiency at Design Conditions	*	%	Power at Design Conditions	*	BHP	
18	Blower Speed at Design Conditions (Note 25)	*	RPM	Equipment Design Temperature (Note 18)	*	°F	
19	Max. Discharge Temp. at Design Conditions	*	°F	Critical Speeds (Note 17)	*	RPM	
20	**CONSTRUCTION**						
21	Blower Manufacturer	*		Blower Model Number	*		
22	AMCA Drive Arrangement	7		AMCA Inlet Box Position	360		
23	AMCA Motor Position	Direct Drive		AMCA Discharge	CW 360		
24	AMCA Rotation (Note 9)	CW		Blower Scroll Type	*		
25	Blower Motor Operating Weight	*	pounds	Assembly Weight (Mtr + Blower + Base)	*	pounds	
26	Overall Skid Dimensions (Note 5)	Width *	Height *	Length *	inches		
27	Blower Bearing Type	Roller- Grease Lubricated	Blower Bearing Mfg.	*	Bearing Part #	*	
28	Lubricant Mfg. *	Part # *	Bearing Special Features (Notes 19 & 20)	L10 Life 100 khr			
29	Mechanical Coupling Mfg. *	Part # *					
30	**BLOWER WHEEL**						
31	Blower Wheel Type (Note 4)	*	Blower Shaft Diameter	*			
32	Design Wheel Diameter	*	Actual Wheel Diameter	*			
33	Design Wheel Width	*	Actual Wheel Width	*			
34	Design Blower RPM	*	Actual Blower RPM	*			
35	Design Brake Horsepower	*	Actual Brake Horsepower	*			
36	**BLOWER MATERIALS**						
37	Housing (Note 12)	Cast Ductile Iron	Grade *	Blower Wheel	Stainless Steel	Grade	*
38	Evase	N/A	Grade N/A	Mounting Frame	Carbon Steel	Grade	*
39	Shaft	Stainless Steel	Grade *	Inlet Box / Transition Piece	Cast Ductile Iron	Grade	*
40	Inlet Vane	N/A	Grade N/A	Discharge Damper	N/A	Grade	N/A
41	Inlet Screen	N/A	Grade N/A	OSHA Compatible Safety Guards	Carbon Steel	Grade	*
42	**BLOWER ACCESSORIES**						
43	Flanged Inlet	Yes	Flanged Inlet Dimensions	*			
44	Flanged Discharge	Yes	Flanged Discharge Dimensions	*			
45	Flanged Discharge Evase	No	Flanged Evase Dimensions	N/A			
46	Split Housing	No	Split Housing Type	N/A			
47	Inlet Box	No	Inlet Box Type	N/A			
48	Inlet Damper	No	Inlet Damper Type	N/A			
49	Inlet Transition Piece	No	Inlet Transition Piece Flange Dimensions	N/A			
50	Inspection Door (Note 7)	Yes	Inspection Door Size (Note 7)	1" NPT			
51	Drain Connection (Note 7)	Yes	Drain Connection Size (Note 7)	1" NPT			
52	Shaft Seals	Yes	Seal Type	Double Carbon Ring w/ purge			
53	Isolation Base	No	Isolation Base Type	N/A			
54			Isolation Base Manufacturer	N/A			
55	Isolation Springs	Yes	Isolation Springs Mfr and Model No	*			
56			Isolation Springs Minimum Diameter	*			
57			Isolation Springs Deflection	*			
58			Isolation Springs Restraint Features	*			

CENTRIFUGAL MULTI-STAGE BLOWER
Data Sheet:
24590-HLW-MAD-HOP-00038

				MR No. 24590-QL-MRA-MACS-00004		
				Plant Item No. 24590-HLW-MA-HOP-FAN-00008A/B/C 24590-HLW-MA-HOP-FAN-00010A/B/C		Rev. No. 5
1	Project:	RPP-WTP	Bldg./Room #	HLW / H-0429	Manufacturer	*
2	Project No:	24590	Supporting Calculations	24590-HLW-M4C-HOP-00011	Manufacturer Part No	*
3	Site:	DOE Hanford				
4	Safety Class	SS	Supporting Drawings	24590-HLW-M6-HOP-00008	Quantity Required	6
5	Seismic Category (Note 27)	SC-III		24590-HLW-M6-HOP-20008		
6	SSC Characteristic	Air Permit	System Description	24590-HLW-3YD-HOP-00001	Quality Level	Q
7	System No.	HOP				
8	Description: HLW Offgas Stack Extraction Blower - Note 14					
9	Flexible Connection Inlet (Note 23 & 26)	Yes	Insulation (Note 24)	Yes		
10	Flexible Connection Inlet Type	Braided SSTL flexible hose				
11	Flexible Inlet Connection Material	316L SS	braid constructed with 304 SST			
12	Flexible Connection Manufacturer and Model No	*				
13	Flexible Connection Outlet (Note 23 & 26)	Yes				
14	Flexible Connection Outlet Type	Braided SSTL flexible hose				
15	Flexible Outlet Connection Material	316L SS	braid constructed with 304 SST			
16	Flexible Connection Manufacturer and Model No	*				
17	Inlet Screen	No				
18	Inlet Screen Features	N/A				
19	Blower Pedestal	Yes				
20	Blower Pedestal Description	Common mounting base for blower, motor, and bearings				
21	Insulation Studs	No				
22	Silencer	No				
23	MOTOR AND DRIVE REQUIREMENTS					
24	Driven Equipment / Motor / ASD relationship is as follows::					

25	Blower Tag Number	Motor Tag Number	ASD Tag Number
26	HOP-FAN-00008A	HOP-MTR-00007A	HOP-ASD-00002A
27	HOP-FAN-00008B	HOP-MTR-00007B	HOP-ASD-00002B
28	HOP-FAN-00008C	HOP-MTR-00007C	HOP-ASD-00002C
29	HOP-FAN-00010A	HOP-MTR-00008A	HOP-ASD-00004A
30	HOP-FAN-00010B	HOP-MTR-00008B	HOP-ASD-00004B
31	HOP-FAN-00010C	HOP-MTR-00008C	HOP-ASD-00004C

32	Variable Speed Drive	Yes	Provided by others
33	Special Drive Features	1. ASD to operate motor from 30% to 100% of required RPM within a 30 second time frame (max)	
34		2. Provides ASD programming for motor RPM to pass theough any critical speed dead bands to avoid excessive vibration	

35 GAS COMPOSITION

36	Component	kg/hr	wt%
37	N_2	2540	6.74E+01
38	O_2	778.1	2.06E+01
39	H_2O	388.4	1.03E+01
40	Ar	43.3	1.15E+00
41	CO_2	20.7	5.49E-01
42	NO	2.89E-02	7.66E-04
43	NH_3	2.44E-02	6.47E-04
44	N_2O	1.25E-02	3.32E-04
45	SO_2	6.70E-03	1.78E-04
46	NO_2	4.83E-03	1.28E-04
47	H_2	3.53E-03	9.36E-05
48	CO	8.52E-04	2.26E-05
49	VOC	1.38E-04	3.66E-06
50	Hg	1.25E-04	3.32E-06
51	HCl	6.58E-06	1.75E-07
52	HF	3.99E-06	1.06E-07
53	I_2	1.11E-06	2.94E-08
54	Particulate	4.34E-11	1.15E-12
55	Total	3770.58	100

56

57 Source: 24590-HLW-M4E-HOP-00001 pages 14-16 row 61

58

59

CENTRIFUGAL MULTI-STAGE BLOWER
Data Sheet:
24590-HLW-MAD-HOP-00038

MR No.	24590-QL-MRA-MACS-00004					
Plant Item No.	24590-HLW-MA-HOP-FAN-00008A/B/C 24590-HLW-MA-HOP-FAN-00010A/B/C					Rev. No. 5
1	Project:	RPP-WTP	Bldg./Room #	HLW / H-0429	Manufacturer	*
2	Project No:	24590	Supporting Calculations	24590-HLW-M4C-HOP-00011	Manufacturer Part No	*
3	Site:	DOE Hanford				
4	Safety Class	SS	Supporting Drawings	24590-HLW-M6-HOP-00008 24590-HLW-M6-HOP-20008	Quantity Required	6
5	Seismic Category (Note 27)	SC-III				
6	SSC Charateristic	Air Permit	System Description	24590-HLW-3YD-HOP-00001	Quality Level	Q
7	System No.	HOP				
8	Description:	HLW Offgas Stack Extraction Blower - Note 14				

9 **Notes**

10 1) * Denotes data to be provided / verified by vendor.
11 2) N/A denotes "Not Applicable".
12 3) TBD denotes "To Be Determined".
13 4) The impeller shall be anti-surge design developing continuously rising SP from free delivery thru shutoff.
14 5) Bounding dimensions not to exceed 70" W x 76" H x 120" L (Blower, Motor and Baseplate).
15 6) Deleted
16 7) See Specification 24590-WTP-3PS-MACS-T0005 rev. 0, section 3.8.2.
17 8) Deleted
18 9) Rotation is listed as viewed from drive side.
19 10) Deleted
20 11) Deleted
21 12) Blower housing design pressure shall be -3 psi (-82 in WC).
22 13) Deleted
23 14) Contents of this document are Dangerous Waste Permit affecting.
24 15) Deleted
25 16) Deleted
26 17) Critical speeds within operating ranges to be blocked in ASD programming
27 18) This temperature is required for material selection and corrosion analysis. The value is the average temperature of the inlet temperature in line 14 of page 1 and the Discharge Temperature on Line 19 of page 1.
28 19) Provide each blower bearing with RTDs & 2 - directional (X and Y) vibration sensors for remote indication
29 20) Radial type roller bearings shall have labyrinth type seal.
30 21) The original, more conservative of 82 inches WC was retained rather than the minimum value 70 inches WC in 24590-HLW-M4C-HOP-00011 Rev. 2.
31 22) Design blower capacity is the predicted capacity from calculation, 24590-HLW-M4C-HOP-00011 Rev 1 Page A-10 Cell Y61, divided by 2 (two blowers running at capacity)
32 23) Connections shall match Buyer's supply pipe: 10 inch diameter, 316L SS, Schedule 40S, w/ 150 lb. RF Flange.
33 24) Blowers shall be insulated (except bearing housings) by Buyer and heat traced to maintain casing metal temperature above the acid dewpoint of the process gas.
34 25) Shaft speed shall not exceed 3600 rpm unless approved by Buyer. Tip speed of rotating assembly shall not exceed 530 fps unless approved by Buyer.
35 26) See Specification 24590-WTP-3PS-MACS-T0005 rev. 0, section 3.8.1.6 for flexible connection requirements.
36 27) See Specification 24590-WTP-3PS-MACS-T0005 rev. 0, section 6.3 for seismic testing requirements.
37
38
39

40 **SAFETY SCREENING**
41 **Safety Screening/Evaluation Required? If yes per 24590-WTP-GPP-SREG-002, E&NS Signature required below.** X Yes ___ No
42
43
44
45
46
47
48
49
50
55

CENTRIFUGAL MULTI-STAGE BLOWER
Data Sheet:
24590-HLW-MAD-HOP-00038

MR No.
24590-QL-MRA-MACS-00004

Plant Item No.
24590-HLW-MA-HOP-FAN-00008A/B/C
24590-HLW-MA-HOP-FAN-00010A/B/C

Rev. No.
5

1	Project:	RPP-WTP	Bldg./Room #	HLW / H-0429	Manufacturer	*
2	Project No:	24590	Supporting Calculations	24590-HLW-M4C-HOP-00011	Manufacturer Part No	*
3	Site:	DOE Hanford				
4	Safety Class	SS	Supporting Drawings	24590-HLW-M6-HOP-00008 24590-HLW-M6-HOP-20008	Quantity Required	6
5	Seismic Category (Note 27)	SC-III				
6	SSC Characteristic	Air Permit	System Description	24590-HLW-3YD-HOP-00001	Quality Level	Q
7	System No.	HOP				
8	Description: HLW Offgas Stack Extraction Blower - Note 14					

Rev	Reason for Revision	System Engineer	Equipment Engineer	E&NS	Checker	Reviewer	Approver	Date
5	Revised to incorporate new specification 24590-WTP-3PS-MACS-T0005, Rev. 0 to remove ASME AG-1 requirements. Other minor clarifications are as noted with revision bars. This data sheet is issued for quote.	MGO.	M.Summers	C Meng	AM		R. Stevens	5/14/10
4	Reissued for Purchase. Minor change, (inclusion of pages 5 & 6 which were omitted in rev. 3)	M. O'Neill	M.Summers	C. Meng	D.Lamberd	S. Kretzschmar	R. Stevens	7/22/2009
3	Reissued for purchase. Minor revisions to format for clarity. Revised the Material Requisition number from 24590-QL-MRA-MACS-00002 to the new 24590-QL-MRA-MACS-00004. Corrected tag numbers and updated revision number. Changed title to Centrifugal Multi-stage Blowers. Removed reference to cancelled calculation 25490-HLW-MAC-HOP-00001. Added field for SSC Characteristic. Added reference to Note 14. Updated design inlet conditions, capacity, and static pressure to align with 24590-HLW-M4C-HOP-00011 Rev.1 & ECCN 24590-HLW-M4E-HOP-00001. Added field for Inlet Pressure at Design Conditions in place of Total Static Pressure (Max) field. Added field for required minimum efficiency at design conditions per CCN 199933. Changed title of field for Maximum Discharge Temperature and deleted Note 16. Changed title of field from Natural Frequencies to Critical Speeds for clarity. Removed normal and minimum design conditions for clarity. Revised AMCA Drive Arrangement from 8 to 7 to align with industry offering. Specified inlet box position to 360. Changed AMCA Discharge from Upblast to CW 360 to allign with AMCA 99-2406-83. Relocated Blower Motor Operating Weight and Assembly Weight fields and added field for Overall Skid Dimensions. Specified Roller grease lubricated bearings, added fields for Mfg. and Part # for bearing, lubricant, and coupler. Changed coupler to vendor specified. Revised specified materials for housing, shaft, blower wheel, mounting frame, and inlet box/transition piece to align with industry offering. Material grades to be specified by vendor. Revised inspection door size and drain from vendor specified to 1"NPT per specification. 24590-WTP-3PS-MACS-T0004 Rev. 5. Specified seal type as Double Carbon Ring w. purge. Added Note 2 to Special Drive Features field. Added Gas Composition. Deleted Notes 10, 13, 16 and revised Notes 17, 18, 19, 20, & 21. Added Notes 22, 23, 24, 25, 26, & 27	Mike O'Neill	Scott E. Anderson	C. Meng	A. Morretta	S. Kretzschmar	R. Stevens	6/11/2009
2	Re-issued with updated design conditions, reformatted mechanical datasheet for clarity, attached motor and EQ datasheets. This document supercedes 24590-HLW-MUD-HOP-00002.	Mike O'Neill	Scott E. Anderson	C. Meng	C. Knauss	S. Kretzschmar	R. Stevens	3/26/2008
1	Re-issued for purchase, added Note 12, and updated design conditions.	Y. Nurdogan	G. Dunn	C. Meng	D. Reinemann	J. Rouse	J. Julyk	3/21/2007
0	Issued for purchase	J. Rewari	N/A	N/A	J. Medina	N/A	E. Isern	8/12/2004

ATTACHMENT 1 **24590-HLW-MAD-HOP-00038** **ELECTRICAL DATA SHEET** **LOW VOLTAGE INDUCTION MOTOR**	MR No. **24590-QL-MRA-MACS-00004**	
	Plant Item No. **24590-HLW-EM-HOP-MTR-00007A/B/C** **24590-HLW-EM-HOP-MTR-00008A/B/C**	Rev No. **5**

Motor Tag No.: 24590-HLW-EM-HOP-MTR-00007A/B/C and 24590-HLW-EM-HOP-MTR-00008A/B/C

Driven Equipment No.: 24590-HLW-MA-HOP-FAN-00008A/B/C and 24590-HLW-MA-HOP-FAN-00010A/B/C

Service: HLW Offgas Stack Extraction Fan

Refer to "Primary Specification": 24590-WTP-3PS-MACS-T0005

LINE NO.	DESCRIPTION	USER SPECIFIED	SUPPLIER FURNISHED	UNITS
	BASIC DATA:			
1	RATED HORSEPOWER	-	*	HP
2	SYNCHRONOUS SPEED	-	*	RPM
3	VOLTAGE	460	*	V
4	PHASE	3	*	-
5	FREQUENCY	60	*	Hz
6	INSULATION CLASS	F	*	-
7	TEMPERATURE RISE ABOVE 40°C AMBIENT	80	*	deg. C
8	NEMA DESIGN TYPE (B, C, OTHER)	B	*	-
9	EFFICIENCY (STANDARD, PREMIUM)	PREMIUM	*	-
10	ENCLOSURE TYPE (TEFC - SEVERE DUTY PER IEEE Std. 841, TENV, WP1I)	TEFC IEEE Std. 841	*	-
11	SERVICE FACTOR	1.15	*	-
12	COUPLED DRIVE (DIRECT, BELT, GEAR)	Direct	*	-
13	BEARING (ANTI-FRICTION, SLEEVE)	Anti-Friction	*	-
14	BEARING SEAL (ONE END, BOTH ENDS)	Both Ends	*	-
15	SPACE HEATER (FOR MOTORS > 20 HP)	Yes	*	W
16	RTD FOR SLEEVE BEARING : 1 per bearing for Belt drive only	N/A	*	Ω
17	TERMINAL BOX LOCATION		*	-
18	WARRANTY (2 YEARS, 3 YEARS, 5 YEARS)	**see Terms and condition**	*	-
19	SHOP TESTS			
	- MFR STANDARD TEST (Yes / No)	Yes	*	
	- ROUTINE TEST (Yes / No)	Yes	*	
	- FULL TEST (Yes / No)	No	*	
20	UNUSUAL SERVICE CONDITIONS:	Inverter Duty		
21	FLAMMABLE OR EXPLOSIVE GASES	No	*	
22	COMBUSTIBLE, EXPLOSIVE, ABRASIVE OR CONDUCTIVE DUST	No	*	
23	WET OR DRY OPERATING CONDITIONS	Dry	*	
24	NUCLEAR RADIATION	0.5 mrad/hr.		
25	SPECIAL PAINTING REQUIREMENTS PER IEEE Std. 841	(Note 5)	*	
26	OTHER (SC,SS, APC, Non-ITS)	SS	*	
27	OTHER (SEISMIC CATEGORY I, II, III or IV)	SC-III	*	

ATTACHMENT 1 24590-HLW-MAD-HOP-00038 ELECTRICAL DATA SHEET LOW VOLTAGE INDUCTION MOTOR	MR No. 24590-QL-MRA-MACS-00004	
	Plant Item No. 24590-HLW-EM-HOP-MTR-00007A/B/C 24590-HLW-EM-HOP-MTR-00008A/B/C	Rev No. 5

Motor Tag No.: 24590-HLW-EM-HOP-MTR-00007A/B/C and 24590-HLW-EM-HOP-MTR-00008A/B/C

Driven Equipment No.: 24590-HLW-MA-HOP-FAN-00008A/B/C and 24590-HLW-MA-HOP-FAN-00010A/B/C

Service: HLW Offgas Stack Extraction Fan

Refer to "Primary Specification": 24590-WTP-3PS-MACS-T0005

LINE NO.	DESCRIPTION	USER SPECIFIED	SUPPLIER FURNISHED	UNITS
28	MANUFACTURER	-	*	-
29	NEMA FRAME	-	*	-
30	MODEL NUMBER	-	*	-
31	SERIAL NUMBER / MANUFACTURER DATE	-	*	-
32				
33	FULL LOAD CURRENT	-	*	A
34	FULL LOAD TORQUE	-	*	ft-lb
35	POWER FACTOR : - @ 50 % LOAD	-	*	%
	- @ 75 % LOAD	-	*	%
	- @ 100 % LOAD	-	*	%
36	EFFICIENCY : - @ 50% LOAD	-	*	%
	- @ 75% LOAD	-	*	%
	- @ 100% LOAD	-	*	%
37	LOCKED ROTOR CURRENT @ 100 % of RATED VOLTAGE	-	*	A
38	LOCKED ROTOR CURRENT @ 80% of RATED VOLTAGE	-	*	A
39	ALLOWABLE STALL TIME @ FULL VOLTAGE	-	*	SEC
40	ALLOWABLE STALL TIME @ 80% of VOLTAGE	-	*	SEC
41	LOSSES @ FULL LOAD	-	*	W
42	ROTOR WK2 @ MOTOR SHAFT SPEED (For > 250 hp only)	-	*	lb-ft²
43	STARTING POWER FACTOR (For > 75 hp only)	-	*	-
44	SUB TRANSIENT REACTANCE AND X/R (For > 250 hp only)	-	*	-
45	WEIGHT	-	*	lbs
46	ROTATION (CW, CCW, BI-DIR.) FACING DRIVEN EQUIPMENT	-	*	-
47	MEAN TIME BETWEEN FAILURE (MOTOR 100 HP AND ABOVE)		*	
48	STARTING METHOD (FULL/REDUCED VOLTAGE, ASD APPLICATION)	ASD		-
49				
50	RECOMMENDED BEARING LUBRICANT	-	*	

NOTES:

(1) DELETED

(2) Motor should be applied within its rating based on service factor of 1.0.

(3) Data Sheet Line no. from 35 to 47 are applicable for motor 100 HP and above.

(4) The fan and motor are subjected to the same environmental conditions.

(5) See specifcation **24590-WTP-3PS-MACS-T0005 Attachment B**, for requirements.

EQUIPMENT QUALIFICATION DATASHEET (EQD)

Equipment Identification

Component Tag Number	24590-HLW-MA-HOP-FAN-00008A/B/C 24590-HLW-MA-HOP-FAN-00010A/B/C 24590-HLW-EM-HOP-MTR-00007A/B/C 24590-HLW-EM-HOP-MTR-00008A/B/C	Safety Classification	☐ SC ☒ SS ☐ APC ☐ SDC ☐ SDS ☐ RRC
Manufacturer / Supplier	Note 4		
Requisition Number	24590-QL-MRA-MACS-00004		
Model	Note 4	Seismic Category	☐ SC-I ☐ SC-II ☒ SC-III ☐ SC-IV
Description (Include descriptive text [e.g., location, elevation])	HLW Offgas Stack Extraction Fans.		
Safety Function(s)	Provides negative pressure on HLW secondary off-gas system. In conjunction with Booster Extraction Fans, provides motive force for off-gas flow through all off-gas equipment up to and including discharge at stack.		

Seismic Safety Function	☒ Yes ☐ No	Room Number(s):	H-0429
Maintenance Accessible	☒ Yes ☐ No	Method of Maintenance Access:	☐ Remote ☒ Hands On ☐ None
Seismic Operability Requirements:	☒ During Seismic Event	☒ After Seismic Event	
ITS Equipment Type:	☐ Passive Mechanical	☒ Active Mechanical	☒ Electrical

Equipment Environmental Qualification (EEQ)

Environment ☒ Mild ☐ Harsh Contamination Class: C2/C3 Radiation Class: R2	Hi Rad Service ☐ Yes ☒ No	Design Life (yrs) ☒ 40 ☐ Other _ with required maintenance

Parameter Type/Units	Parameter Value	Time Duration (number)	Time Units	WTP Document Number (BUYER)	Submittal Number (SELLER)
Normal					
Normal High Temperature (°F)	95	40	yr	24590-HLW-U0D-W16T-00001	Note 4
Normal Low Temperature (°F)	59	40	yr	24590-HLW-U0D-W16T-00001	Note 4
Normal High Relative Humidity (%RH)	100	40	yr	24590-HLW-U0D-W16T-00001	Note 4
Normal Low Relative Humidity (%RH)	10	40	yr	24590-HLW-U0D-W16T-00001	Note 4
Normal High Pressure (in.-w.g.)	0	40	yr	24590-HLW-U0D-W16T-00001	Note 4
Normal Low Pressure (in.-w.g.)	-0.4	40	yr	24590-HLW-U0D-W16T-00001	Note 4
Normal Radiation Dose Rate (mR/hr)	0.5	40	yr	24590-HLW-U0D-W16T-00001	Note 4
Vibration Magnitude (g)	N/A	40	yr	N/A	Note 4
Vibration Frequency (Hz)	N/A	40	yr	N/A	Note 4

EQUIPMENT QUALIFICATION DATASHEET (EQD)

Equipment Environmental Qualification (EEQ) *(continued)*

Parameter Type/Units	Parameter Value	Time Duration (number)	Time units	WTP Document Number (BUYER)	Submittal Number (SELLER)
Additional Normal Information:					
Abnormal					
Abnormal High Temperature (°F)	95	8	hr	24590-HLW-U0D-W16T-00001	Note 4
Abnormal Low Temperature (°F)	59	8	hr	24590-HLW-U0D-W16T-00001	Note 4
Abnormal High Relative Humidity (%RH)	95	8	hr	24590-HLW-U0D-W16T-00001	Note 4
Abnormal Low Relative Humidity (%RH)	10	8	hr	24590-HLW-U0D-W16T-00001	Note 4
Abnormal High Pressure (in.-w.g.)	4	8	hr	24590-HLW-U0D-W16T-00001	Note 4
Abnormal Low Pressure (in.-w.g.)	-6.7	8	hr	24590-HLW-U0D-W16T-00001	Note 4
Abnormal Radiation Dose Rate (mR/hr)	0.5	0	hr	24590-HLW-U0D-W16T-00001	Note 4
Wet Sprinkler System Present	YES	2	hr	24590-HLW-U0D-W16T-00001	Note 4
Additional Abnormal Information					
Design Basis Events (DBE)					
DBE High Temperature (°F)	95	1000	hr	24590-HLW-U0D-W16T-00001	Note 4
DBE Low Temperature (°F)	59	1000	hr	24590-HLW-U0D-W16T-00001	Note 4
DBE High Relative Humidity (%RH)	95	1000	hr	24590-HLW-U0D-W16T-00001	Note 4
DBE Low Relative Humidity (%RH)	10	1000	hr	24590-HLW-U0D-W16T-00001	Note 4
DBE High Pressure (in.-w.g.)	4	1000	hr	24590-HLW-U0D-W16T-00001	Note 4
DBE Low Pressure (in.-w.g.)	-6.7	1000	hr	24590-HLW-U0D-W16T-00001	Note 4
DBE Radiation Dose Rate (mR/hr)	0.5	0	hr	24590-HLW-U0D-W16T-00001	Note 4
Flood Height (ft)	1.58	1000	hr	24590-HLW-U0D-W16T-00001	Note 4
Submergence (ft)	N/A**	N/A**	N/A	24590-HLW-U0D-W16T-00001	Note 4
Chemical/Spray Exposure	Yes	12.5	hr	24590-HLW-U0D-W16T-00001	Note 4
Additional DBE Information	Spray exposure is composed of water from fire suppression system. **Equipment is not expected to operate submerged or after a DBE flood event.				

EQUIPMENT QUALIFICATION DATASHEET (EQD)

DBE Chemical Exposure Details	
DBE Chemical Types/Concentrations	NONE

Interfaces (Electrical)	
Power Supply Voltage (VAC, VDC)	460 VAC
Power Supply Frequency (Hz)	60
Power Connection Method	Note 3
I/O Signals to/from Equipment	Note 3
I/O Connection Method	Note 3

Interfaces (Mechanical)	
Mounting Configuration (orientation)	Note 3
Mounting Method (bolts, welds, etc.)	Isolation springs / base to be welded to existing embeds or anchored into concrete depending on the Seller's anchorage configuration.
Auxiliary Devices	None

Equipment Seismic Qualification (ESQ)

Parameter	Title	Reference/Document Number	Version / Revision	Remarks
WTP Seismic Design Specification (BUYER)	ENGINEERING SPECIFICATION FOR STRUCTURAL DESIGN LOADS FOR SEISMIC CATEGORY III & IV EQUIPMENT AND TANKS	24590-WTP-3PS-FB01-T0001	3	N/A
Specified Seismic Load (BUYER)	ENGINEERING SPECIFICATION FOR STRUCTURAL DESIGN LOADS FOR SEISMIC CATEGORY III & IV EQUIPMENT AND TANKS	24590-WTP-3PS-FB01-T0001	3	N/A
Design Seismic Load (SELLER	N/A	N/A	N/A	To be provided by the Seller via the G-321-E submittal process. (Note 2)
Qualification Method (SELLER)	N/A	N/A	N/A	To be provided by the Seller via the G-321-E submittal process. (Note 2)
Qualification Report Number (SELLER)	N/A	N/A	N/A	To be provided by the Seller via the G-321-E submittal process. (Note 2)
Submittal Number (BUYER)	TBD	TBD	TBD	N/A

EQUIPMENT QUALIFICATION DATASHEET (EQD)

Notes and Additional Information

Note 1: Where pressure is given in inches of water column (in-w.c.) in the source document, it is generally assumed that this is in reference to atmospheric pressure and is therefore equivalent to inches of water gage (in-w.g.).

Note 2: Supplier (Seller) shall perform Equipment Seismic and Environmental Qualification in accordance with the listed parameters and the applicable specification requirements.

Note 3: To be provided by Seller.

Note 4: Data to be provided by Seller through the submittal process as required on the G-321-E form.

Please note that source, special nuclear, and byproduct materials, as defined in the Atomic Energy Act of 1954 (AEA) are regulated at the U. S. Department of Energy (DOE) facilities exclusively by DOE acting pursuant to its AEA authority. DOE asserts that pursuant to AEA, it has sole and exclusive responsibility and authority to regulate source, special nuclear, and byproduct materials at DOE-owned nuclear facilities. Information contained herein on radionuclides is provided for process description purposes only.

ISSUED BY
RPP-WTP PDC

R11223092

RIVER PROTECTION PROJECT – WASTE TREATMENT PLANT

ENGINEERING SPECIFICATION

FOR

Single Stage High Integrity Centrifugal Fans and Blowers (AG-1)

Please note that source, special nuclear, and byproduct materials, as defined in the Atomic Energy Act of 1954 (AEA) are regulated at the U. S. Department of Energy (DOE) facilities exclusively by DOE acting pursuant to its AEA authority. DOE asserts that pursuant to AEA, it has sole and exclusive responsibility and authority to regulate source, special nuclear, and byproduct materials at DOE-owned nuclear facilities. Information contained herein on radionuclides is provided for process description purposes only.

Content applicable to ALARA? ☐ Yes ☒ No

ADR No. Rev

Specification changes retroactive? ☐ Yes ☒ No
☐ N/A (alpha revision or revision 0)

Quality Level
Q
DOE Contract No. DE-AC27-01RV14136

		M. Summers	J. Williamson	G. Dunn	J. Hinckley	Gerard Garcia
6	6/2/10	M. Summers	J. Williamson	G. Dunn	J. Hinckley	G. Garcia
5	1/27/09	S. Anderson	John Dick	Gerard Garcia	Chris Meng	Janet Roth
4	2/13/08	S. Anderson	John Dick	Gerard Garcia	Merl Rosenthal	Robert Voke
3	2/1/07	K. Yu	J. Dick	E.Diaz	D Lord	Robert Voke
2	11/17/05	A. Saguisag	W. Lawrence	G. Garcia	N/A	Robert Voke
1	7/22/04	A. Saguisag	G. Gaulden	Dennis Klein for G. Garcia	N/A	Dennis Klein for Garth Duncan
0	1/26/04	A. Saguisag	G. Garcia	Jan Sanders	N/A	Jan Sanders for Garth Duncan
REV	DATE	BY	CHECK	REVIEW	E&NS	DPEM/EM

SPECIFICATION No.	Rev
24590-WTP-3PS-MACS-T0004	6

Revision History

Revision	Reason for Revision
0	Issued for Purchase
1	Added information for multi-stage blowers including Ellis & Watts' input and definitions of abbreviations in spec, incorporated SCNs 24590-WTP-3PN-MACS-00008, 00009 & 00010,made editorial changes, clarified coating requirements and re-issued for purchase.
2	Incorporated SCNs 24590-WTP-3PN-MACS-00016, adding additional acceptable exceptions/clarifications from Supplier, and 24590-WTP-3PN-MACS-00018, allowing use of ASME PTC-10-1997 test procedure for performance testing of multi-stage blowers. Clarified required number of wire for dual element RTD. Changed Par. 3.9.4 to remove requirement to mount signal conditioner to ASD cabinet & specified preferred Foundation Fieldbus converters. Changed Par. 8.1 to clarify QA program requirements. Incorporated editorial comments and re-issued for purchase. Added issue dates for referenced codes and standards as noted in parent codes or standards listed in SRD. Where Engineering Equivalency Evaluation has been done, dates of latest equivalent editions have been added instead of dates shown in parent codes or standards. Deleted AMCA 99 - Standards Handbook.
3	Incorporate 24590-WTP-SDDR-HV-06-00007. Deleted ASDs from scope. Modified Q & Safety Class definitions, electrical requirements, RTD requirements, vibration criteria, & submittal requirements. Added industry standards and Appendicies B & C. All revisions are retroactive.
4	Removed Appendices B & C - Industry standards applicable on a system level, not at the level of the components. Added Industry Standards ISO 3744-1995 & ISO 1940-1:2003 relating to requirements for multi-stage blowers. Added requirements for deriving control power supplies form Buyer's supplied power.
5	Major Revision, No revision bars were used. Incorporated Specification Change Notices 24590-WTP-3PN-MACS-00028 & -00030. -Added definitions to Section 1.4 for Safety Class, Safety Significant. Changed definition of Q in Section 1.4 -Removed from Section 2.2 references to ASCE 4-98, AMCA 99-0401-1986, 2000, all references to UL standards due to misapplication. -Reorganized Sections 3 and 4 for clarity. Split requirements for single stage and multi-stage blowers for clarity. -Added clarifications to Section 6.5. -Added two sections to Section 6.6 specify standards for the performance testing of single and multi-stage blowers. -Added section to Section 10.2.1 requiring submittal of assembly drawings.
6	Supersedes 24590-WTP-3PS-MACS-T0001 Rev 6. Major Revision, no change bars used. Streamlined specifications 24590-WTP-3PS-AFPS-T0001, 24590-WTP-3PS-EKP0-T0001, and 24590-WTP-3PS-JQ07-T0001. Removed duplicate sources of information. Added requirement for AG-1 compliance matrix. Revised to remove Multi-Stage Blowers

Contents

1 Scope 1
1.1 Project Description and Location 1
1.2 Equipment, Material, and Services Required 1
1.3 Work by Others 1
1.4 Definitions 2
1.5 Abbreviations 2
1.6 Safety/Quality Classifications 3
2 Applicable Documents 3
2.1 Codes 3
2.2 Industry Standards 4
2.3 Reference Documents/Drawings 5
3 Design Requirements 5
3.1 General 5
3.2 Basic Function 6
3.3 Performance 6
3.4 Lifting and Handling Requirements 6
3.5 Sound Ratings 6
3.6 Environmental Qualification 7
3.7 Seismic Qualification 7
3.8 Mechanical Requirements 7
3.9 Electrical Requirements 10
3.10 Low Voltage Induction Motors 14
3.11 Instrumentation and Control Requirements 14
3.12 Accessibility and Maintenance 20
3.13 Accessories 21
4 Materials 21
4.1 Construction 21
4.2 Prohibited Materials 22
4.3 Special Requirements 22
5 Fabrication 22
5.1 Fabrication of Blowers 22
5.2 Welding 22
6 Tests and Inspections 23
6.1 General 23

6.2 Personnel Qualifications 23
6.3 Non-Destructive Examinations 23
6.4 Shop Tests 24
6.5 Site Tests 25
7 Preparation for Shipment 25
7.1 General 25
7.2 Cleanliness 25
7.3 Painting and Special Protective Coatings 25
7.4 Tagging 25
8 Quality Assurance 25
8.1 QA requirements specific to item(s) or service 25
8.2 Supplier Deviation 26
9 Configuration Management 26
10 Documentation and Submittals 26
10.1 General 26
10.2 Submittals 26

Attachment

Attachment A Tailored version of specification 24590-WTP-3PS-AFPS-T0001, Shop Applied Special Protective Coatings for Steel Items and Equipment A-1

Tables

Table 1. Instrument Supplier List 15
Table 2. Instrumentation Cable Schedule 18

1 Scope

1.1 Project Description and Location

The River Protection Project-Waste Treatment Plant (WTP) is a complex of waste treatment facilities where the Department of Energy's (DOE) Hanford site tank waste will be put into stable glass form. The WTP Contractor will design, build, and start up the WTP pretreatment and vitrification facilities for the US Department of Energy's (DOE) Office of River Protection (ORP). The waste treatment facilities will pretreat and immobilize the mixed waste (low-activity waste, LAW and high-level waste, HLW) currently stored in underground storage tanks at the Hanford Site.

The Hanford Site occupies an area of about 560 square miles and is located along the Columbia River, north of the city of Richland, Washington. The WTP Facility will be constructed at the East End of the 200 East Area of the Hanford Site. Benton, Franklin, and Grant counties surround the Hanford Site.

1.2 Equipment, Material, and Services Required

Design, furnish materials, fabricate, test, and package the Single Stage High Integrity Centrifugal Fans and Blowers (hereinafter called Blowers) and accessories in accordance with this specification including:

1.2.1 Blowers, each complete with electric motors, and accessories as specified here and in referenced technical specifications and data sheets attached to the Material Requisition (MR).

1.2.2 Special tools required for installation and maintenance, including accessories for lifting the motors and blowers.

1.2.3 Each blower/motor assembly shall include all components, accessories, and instruments fully assembled, wired, and skid mounted requiring only connection to the Buyer's electrical power, control systems, and ductwork.

1.2.4 Services of an erection and/or startup supervisor, if requested by Buyer.

1.2.5 Lifting eyes or lugs to facilitate lifting and handling of the fans. If spreader bars or special lifting devices are required, they shall also be furnished.

1.3 Work by Others

1.3.1 Material unloading and storage at jobsite

1.3.2 Installation labor

1.3.3 Foundation and anchor bolts

1.3.4 Ductwork external to the unit

1.3.5 Electric power supply

1.3.6 Wiring external to the blower motor and adjustable speed drive

1.3.7 Field Testing and Inspection

1.3.8 Integrated testing with Adjustable Speed Drive

1.4 Definitions

Quality Level	Identifies the quality requirements to be applied to WTP Project's Systems, Structures and Components (SSCs), and activities based on safety classification and SSC characteristic. Identified quality levels are Q, and Commercial Material (CM). Applicable ASME NQA-1 requirements are shown on the Supplier Quality Assurance Program Requirement data sheet attached to the MR.
Q	A quality level that includes Safety Class (SC), Safety Significant (SS) and Air Permit (AP) affecting SSCs.
Safety Class (SC)	An SSC whose preventive or mitigative function is necessary to limit radioactive material exposure to the public.
Safety Significant (SS)	An SSC whose preventive or mitigative function is a major contributor to defense-in-depth and/or worker safety.
Seismic Category	WTP Project's seismic classifications of SSC's based on their safety function. Seismic categories utilized in this specification are Seismic Category I (SC-I) and Seismic Category III (SC-III).
C3	A secondary containment zone.
C5	Plant areas and associated ventilation ductwork that is in direct contact with radioactive material and which prevents the spread of radioactive material to adjacent zones under both normal and abnormal operating conditions.

1.5 Abbreviations

ASHRAE	American Society of Heating, Refrigerating and Air Conditioning Engineers
ABMA	American Bearing Manufacturers Association
AMCA	Air Movement and Control Association, Inc.
ANSI	American National Standards Institute
ASNT	American Society for Nondestructive Testing
ASME	American Society of Mechanical Engineers
ASTM	ASTM International
AWS	American Welding Society
dBA	A-weighted decibel (unit of sound pressure level)
ISO	International Standards Organization

MR	Material Requisition
NEC	National Electric Code
NEMA	National Electrical Manufacturers Association
NFPA	National Fire Protection Association
NRTL	Nationally Recognized Testing Laboratory
OEM	Original Equipment Manufacturer
OSHA	Occupational Safety & Health Act
QA	Quality Assurance
RPP-WTP	River Protection Project-Waste Treatment Plant
RTD	Resistance Temperature Detector
SCFM	Standard Cubic Feet per Minute
SSC	Structure, System, or Component
SSPC	Society for Protective Coatings
UL	Underwriters Laboratories, Inc.

1.6 Safety/Quality Classifications

Safety Class, Quality Level, and Seismic Category of high integrity centrifugal fans described in this specification are noted in Fan Data Sheets attached to the MR. The Safety Functions of the high integrity centrifugal fans are listed in Appendix 2 of the data sheets.

2 Applicable Documents

The following documents form a part of this specification to the extent specified herein. In the event of conflict between the document referenced herein and the contents of this specification, Seller shall notify Buyer and obtain approval for its disposition.

Effective dates of codes and standards shall be as shown in ASME AG-1-1997 with ASME AG-1a Addenda 2000, unless noted otherwise. If effective dates of Codes and Standards to be used by Seller are different from those shown on ASME AG-1-1997 and its addenda, Seller shall provide justification for use of these versions.

References contained within brackets [ex: 24590-WTP-3PS-MACS-XXXXX] are for WTP internal use and not applicable to the seller.

2.1 Codes

2.1.1 ASME AG-1-1997 with ASME AG-1a Addenda 2000, Code on Nuclear Air and Gas Treatment

2.1.2 ASME B & PVC-1995, Section IX - Qualification Standard for Welding and Brazing

2.1.3 ASME NQA-1-2000, Quality Assurance Program Requirements for Nuclear Facility Applications

2.1.4 AWS D1.1-2000, Structural Welding Code, Steel

2.1.5 AWS D1.3-98, Structural Welding Code, Sheet Steel

2.1.6 AWS D1.6-99, Structural Welding Code, Stainless Steel

2.1.7 AWS D9.1-2000, Sheet Metal Welding Code

2.1.8 AWS D14.6-96, Welding of Rotating Elements of Equipment

2.1.9 OSHA 29 CFR 1910, Occupational Safety and Health Standards

2.1.9.1 Subpart O Machinery and Machine Guarding

2.1.9.2 Subpart S Electrical

2.1.10 NFPA 70-1999, National Electrical Code

2.2 Industry Standards

2.2.1 ABMA 9-1990, Load Ratings and Fatigue Life for Ball Bearings

2.2.2 ABMA 11-1990, Load Ratings and Fatigue Life for Roller Bearings

2.2.3 AMCA 99-86, Standards Handbook

2.2.4 AMCA 99-2404-1978, Drive Arrangement for Centrifugal Fans

2.2.5 AMCA 99-2406-1983, Designations for Rotation and Discharge of Centrifugal Fans

2.2.6 AMCA 210-1999, Laboratory Methods of Testing Fans for Rating

2.2.7 AMCA 300-2005, Reverberant Room Method of Sound Testing of Fans

2.2.8 AMCA 301-1990, Method for Calculating Fan Sound Ratings From Laboratory Test Data

2.2.9 ANSI / API Std 670, Machinery Protection Systems.

2.2.10 ASNT-SNT-TC-1A-2001, ANST Recommended Practice

2.2.11 ASTM A36-01, Standard Specification for Structural Carbon Steel

2.2.12 IEEE 1050-1996, IEEE Guide for Instrumentation and Control Equipment Grounding in Generating Stations

2.2.13 IEEE 1202 IEEE Standard for Flame Testing of Cables for Use in Cable Tray in Industrial and Commercial Occupancies

2.2.14 ISO 3744-1995, Acoustics - Determination of Sound Power Levels of Noise Sources Using Sound Pressure - Engineering Method in an Essentially Free Field over a Reflecting Plane

2.2.15 NEMA 250, Enclosures for Electrical Equipment

2.2.16 NEMA ICS 6, Enclosures

2.2.17 NEMA MG 1-1998, Motors and Generator

2.3 Reference Documents/Drawings

2.3.1 24590-WTP-3PS-AFPS-T0001, Engineering Specification for Shop Applied Special Coatings for Steel Items and Equipment, as tailored in Attachment A.

2.3.2 [24590-WTP-3PS-EKP0-T0001, Engineering Specification for Package Equipment, as contained in Section 3.9]

2.3.3 24590-WTP-3PS-FB01-T0001, Engineering Specification for Structural Design Loads for Seismic Category III & IV Equipment and Tanks.

2.3.4 24590-WTP-3PS-G000-T0001, Engineering Specification for Supplier Quality Assurance Program Requirements

2.3.5 24590-WTP-3PS-G000-T0003, Engineering Specification for Packaging, Handling and Storage Requirements

2.3.6 24590-WTP-3PS-G000-T0014, Engineering Specification for Supplier Design Analyses

2.3.7 24590-WTP-3PS-G000-T0019, Acquisition of Commercial Items and Services for Use in Safety Applications at WTP.

2.3.8 24590-WTP-3PS-JQ06-T0005, Engineering Specification for Environmental Qualification of Controls and Electrical Systems

2.3.9 [24590-WTP-3PS-JQ07-T0001, Engineering Specification for Instrumentation for Package Systems, as contained in Section 3.11]

2.3.10 24590-WTP-3PS-MUMI-T0002, Low Voltage Induction Motors

2.3.11 24590-WTP-3PS-SS90-T0001, Seismic Qualifications of Seismic Category I/II Equipment and Tanks

2.3.12 24590-WTP-LIST-CON-08-0001, Restricted Materials list WTP Safety Assurance

3 Design Requirements

3.1 General

3.1.1 Design of the Blowers shall conform to ASME AG-1, Section BA. Prior to fabrication, the supplier shall submit a compliance matrix that demonstrates how each of the AG-1

requirements are met. For AG-1 requirements that do not apply to the equipment being procured, the supplier shall show how the intent of the requirements is being met.

3.1.2 The Blowers will provide the motive force required to move ventilation air in the RPP-WTP ventilation systems and gaseous effluent in process systems, as shown in the Fan Data Sheets.

3.2 Basic Function

3.2.1 The blowers will provide the motive force required to transport and discharge air and gaseous effluents to atmospheres, as shown in the Blower Data Sheets.

3.2.2 Blowers shall be stable throughout its entire range from free flow to shut off conditions.

3.3 Performance

3.3.1 Blower performance ratings shall be tested in accordance with AG-1 Section BA 5121. Blowers shall be capable of performing at conditions shown on the Blower Data Sheets.

3.3.2 Design basis performance and capacity data are as listed on the Blower Data Sheets.

3.3.3 The equipment and appurtenances will be used in a plant that has design life of 40 years. The design objective for these centrifugal fans shall be based on a useful life expectancy of 40 years with periodic maintenance as recommended by the Seller. The supplier shall provide a brief description and justification for the Mean Time Between Failure figure provided on the Blower Data Sheets.

3.4 Lifting and Handling Requirements

3.4.1 For lifting and handling requirements, see Spec 24590-WTP-3PS-G000-T0003.

3.5 Sound Ratings

This requirement covers noise requirements for blowers, including all motors, equipment, and sub-systems furnished by the Supplier. The noise limit applies to operation of the Equipment at rated load or full capacity, and during restart and shut down. When the Equipment or a sub-system is operated cyclically or intermittently, the noise limits apply during all portions of the cycle

3.5.1 Blowers sound ratings shall conform to AMCA 301, and be tested in conformance to AMCA 300 or ISO 3744. Sound level data report shall be in accordance with ASME AG-1 BA-4421.

3.5.2 The A-weighted sound pressure level at 3 feet from the surface of the blower casing shall not exceed 85 dBA. The limit applies on each of four sides of the blower at the elevation of the centerline of the blower, but no less than 3 feet above grade or the platform upon which the blower is mounted. All sound pressure level limits apply to each blower system taken as a whole, and as installed.

3.5.3 If sound pressure level exceeds 85 dBA at 3-feet, Seller shall obtain Buyer permission to proceed in the form of a submittal stating estimated sound power level.

3.5.4 If specified on Blower Data Sheets, silencers shall be provided to meet the sound pressure level.

3.6 Environmental Qualification

3.6.1 Environmental equipment qualification of the blowers, motors, instruments, and electrical accessories shall be conducted in accordance with specification 24590-WTP-3PS-JQ06-T0005, Engineering Specification for Environmental Qualification of Control and Electrical Systems and Components.

3.6.2 The environmental conditions for the plant rooms in which the blowers are located are listed on the Environmental Qualification data sheets attached to the blower data sheets.

3.7 Seismic Qualification

3.7.1 Seismic qualification of blowers shall be in accordance with the methods and procedures described in Specification 24590-WTP-3PS-SS90-T0001, "Seismic Qualification of Seismic Category I/II Equipment and Tanks", or 24590-WTP-3PS-FB01-T0001, "Structural Design Loads for Seismic Category III/IV Equipment and Tanks".

3.7.2 The Seismic Category of the blowers will be indicated on the Blower Data Sheets.

3.7.3 Any additional structural loading will be indicated on the Blower Data Sheets. In-Structure Response Spectra (ISRS) curves for Seismic Category I/II equipment or items are attached to the blower data sheets.

3.7.4 In addition to seismic analysis, seismic testing of a sacrificial unit to determine operability shall be required when the Equipment Qualification data sheet states the equipment must be operational after a seismic event. Material from the sacrificial units shall not be used in tagged equipment (permanent plant equipment).

3.7.5 The Buyer may witness the seismic testing of blowers.

3.8 Mechanical Requirements

3.8.1 General

3.8.1.1 Blower housings shall be designed for both positive pressures of greater than 125 % of the design operating pressure of the blower and negative pressures as specified on the blower data sheets.

3.8.1.2 Blower inlets and outlets shall include allowances for the full dead weight of any flexible connections connected to the inlet and outlet.

3.8.1.3 Shaft speed shall not exceed 3600 rpm unless approved by Buyer. Tip speed of rotating assembly shall not exceed 530 fps unless approved by Buyer.

3.8.1.4 Blower housings shall be designed to prevent any internally propelled missiles from penetrating the housing.

3.8.1.5 Blower inlet and discharge connections shall be provided with temporary protective cover. These covers will be removed prior to connection to Buyer's piping and/or ductwork.

3.8.1.6 If specified on the blower data sheets, braided stainless steel 316L flexible hoses with stainless steel 316L flanges shall be provided to mate with the blowers' inlet and outlet flanges. Stainless steel connectors shall have flexible core of annular corrugated stainless steel 316L tubing. Braid for the connectors shall be stainless steel 304. End fittings shall be 150# raised face stainless steel 316L flanges conforming to ANSI dimensions. Connectors shall be shipped loose for field installation.

3.8.1.7 Unless specified otherwise on data sheets, blowers shall be "Gas Tight" in accordance with requirements of Section BA 4142 of ASME AG-1.

3.8.1.8 Blower drive arrangement shall be as shown on Blower Data Sheet. Drive arrangement designations shall be per AMCA 99-2404. Designations for rotation and discharge shall be per AMCA 99-2406.

3.8.1.9 When indicated on the Blower Data Sheets, Supplier shall provide an evase for installation on fan discharge. Evase shall be all welded construction and provided with flanged and gasketed inlet and outlet.

3.8.1.10 When indicated on the Blower Data Sheets that blowers shall be of Spark Resistant Construction, blowers shall be Type A in accordance with AMCA 99-0401-86.

3.8.2 Access Doors and Inspection Ports

3.8.2.1 If indicated on Blower Data Sheets, Seller shall provide a flanged, bolted, and gasketed access door, complete with handle, in blower housing to allow inspection. Access door shall be raised design to allow for field installed 2.5 in. thickness insulation when required.

3.8.2.2 The access door, when required, shall be on the horizontal centerline of the blower. Door gasket and seal pads shall meet requirements of ASME AG-1 Article FE-3130.

3.8.3 Balance and Vibration Standards

3.8.3.1 The blower wheel/impeller and shaft shall be dynamically balanced in accordance with Section BA-4161 of ASME AG-1. The blower wheel shall be dynamically balanced prior to assembly into the housing. Final balancing shall be performed on the completed rotor (impeller and shaft) assembly. All vibration tests shall be in accordance with ASME AG-1, Section BA-4162, with results documented and submitted to Buyer.

3.8.3.2 Soft foot is the condition where the bottoms of the equipment "feet" or "base" are not machined flat in the same plane or parallel with their mating (or

mounting) surface creating a situation where all the "feet" or "base" are not equally supporting the weight of the equipment. Each foot must be checked for soft foot. Any vertical or angular soft foot that exceeds 0.003 inches is excessive and must be corrected.

3.8.4 Bearings

3.8.4.1 Seller shall provide a "heat slinger" device attached to the blower shaft external to the housing to help in dissipation of heat for bearing protection, as required. The "heat slinger" shall be equipped with safety guards.

3.8.4.2 For all blowers, it shall be possible to replace the bearings without disconnecting any piping and/or ductwork or disassembling of the blower housing.

3.8.4.3 Bearings for blowers shall be heavy-duty pillow block, self-aligning, grease-lubricated ball bearings, or heavy duty pillow block self-aligning, grease-lubricated roller bearings, suitable for the maximum operating temperature as indicated on the Blower Data Sheets.

3.8.4.4 Bearings for blowers shall have a minimum L-10 service rating life of 200.000 hours, unless noted otherwise on the data sheets. Bearing rating life shall be established in accordance with ABMA 9 or 11, as applicable.

3.8.4.5 Provide seals to prevent loss of lubricant and admission of contaminants.

3.8.4.6 Provide extended lube lines and fittings as required to permit lubrication during operation.

3.8.4.7 Bearing lubricants shall be suitable for use in radiation levels as specified on the Environmental Qualification data sheet attached to the Equipment data sheet.

3.8.5 Shafts

3.8.5.1 No contact shall be made between the shaft rotor and the housings, other than through the bearings.

3.8.5.2 Shafts shall be of the material specified on the blower data sheet and shall be turned, ground and polished, with machined keyways for attaching impeller and drive coupling.

3.8.5.3 Impeller(s) are to be secured to the blower shaft by locknuts or set screws.

3.8.5.4 The blower impeller and shaft shall be rated for 110% of the design rpm listed on the Blower Data Sheets.

3.8.6 Shaft Seals

3.8.6.1 Blowers shall be furnished with shaft seals as specified on the Blower data sheet .

3.8.6.2 Shaft seals shall be fully capable of withstanding the required test pressures before, during, and after blower operation.

3.8.7 Safety guards

3.8.7.1 Blowers shall be provided with bolted drive guards that cover the shaft and bearings. Provisions shall be made for insertion of tachometer and access to lube fittings without removal of drive guards.

3.8.7.2 Safety guards shall be expanded metal with an angle framework or shall be formed plate types.

3.8.7.3 The guards shall comply with the requirements of OSHA 29 CFR 1910 Subpart O - Machinery and Machine Guarding.

3.8.8 Loadings

3.8.8.1 Blower assemblies shall be self-supporting, capable of carrying the static loads of the blower components and the stress imposed during shipment, installation, and operation.

3.9 Electrical Requirements

[Source: 24590-WTP-3PS-EKP0-T0001, Rev 3]

3.9.1 Criteria for Acceptability of Electrical Equipment
[Section 2.0, 24590-WTP-3PN-EKP0-00005]

- All electrical equipment for facility and equipment wiring, as defined by the National Electrical Code NFPA 70-1999, shall be Approved. Approval will be in accordance with Article 90-4, "Enforcements", Article 90-7, "Examination of Equipment for Safety," and Article 110-3, "Examination, Identification, Installation, and Use of Equipment."
- Approved means "Acceptable to the Authority Having Jurisdiction" (AHJ), as defined in Article 100 of NFPA 70-1999. Only the WTP Electrical AHJ can provide the approval.
- "Equipment" is defined by the NFPA 70 as, "A general term including material, fittings, devices, appliances, fixtures, apparatus, and the like used as a part of, or in connection with an electrical installation". As used here, the entire mechanical assembly is not considered an electrical installation, only the electrical and/or electronic components, and the interconnecting wiring.
- Listing and labeling by an OSHA Recognized NRTL is the primary means (Method 1 below) of obtaining WTP AHJ approval for electrical equipment, devices and materials.
- All Control Panels shall be UL labeled by a certified UL 508A shop.
- Electrical Equipment that is installed on (standard or custom fabricated) Mechanical Equipment shall comply with the requirements stated above.
- Electrical Equipment, that is part of a Mechanical Packaged Equipment assembly, being field-evaluated and labeled at the factory by a NRTL is an alternate method of obtaining WTP AHJ approval.

3.9.1.1 Method 1 (Primary): Listed, Labeled or Certified (i.e. UL508A) [Section 2.1, 24590-WTP-3PN-EKP0-00005]

The WTP AHJ shall approve and accept electrical equipment without additional examination if it is Listed, Labeled, or Certified by a US NRTL, as recognized by OSHA under 29 CFR 1910-Subpart S and is acceptable for the application, environment and other requirements of NEC Article 110. For a listing of and Typical Registered Certification Marks of US NRTL's recognized by OSHA go to http://www.osha.gov/dts/otpca/nrtl/nrt1mrk.html.

3.9.1.2 Method 2 (Alternate): Field Evaluation by a NRTL [Section 2.2, 24590-WTP-3PN-EKP0-00005]

3.9.1.2.1 Electrical equipment that is part of an overall electrical or mechanical assembly having a NRTL safety evaluation or a field evaluation, which states the equipment has been accepted or otherwise deemed safe by the NRTL recognized by OSHA under 29 CFR 1910-Subpart S, using US standards, will be evaluated by the WTP AHJ for acceptability. If found acceptable no further examination of the equipment is required.

3.9.1.2.2 The supplier shall submit all field evaluation reports completed by an OSHA recognized NRTL to the Buyer for review and approval by the AHJ. These field evaluation reports shall show compliance to the applicable USA Electrical Standard(s) recognized by OSHA that are listed on the OSHA website http://www.osha.gov/dts/otpca/nrt1/allstds.html.
The NRTL Label will be as shown on the OSHA website with whatever additional markings that are necessary to indicate acceptability for use in the USA http://www.osha.gov/dts/otpca/nrtl/nrtlmrk.htm.

3.9.1.2.3 The supplier shall submit a Certificate of Compliance (C of C) document for review and approval by the AHJ that lists the USA Electrical Standard(s) that each electrical material or equipment is evaluated to for it's NRTL Listing. Only those standards that are listed on the OSHA website http://www.osha.gov/dts/otpca/nrtl/allstds.html are acceptable to the AHJ. The certification shall confirm that the NRTL Label for each electrical component will be as shown on the OSHA website including the additional markings required to indicate acceptability for use in the USA http://www.osha.gov/dts/otpca/nrtl/nrtlmrk.html.

3.9.1.3 If a supplier is unable to meet the criteria in Method 1 or Method 2, the supplier shall request in writing, a variance by the WTP Electrical AHJ. [Section 2.3, 24590-WTP-3PN-EKP0-00005]

3.9.2 Power Protection and Disconnecting Means

3.9.2.1 Enclosures with incoming power supply, shall have a manually actuated disconnecting means mounted on or close to the enclosure, in an easily accessible location.

3.9.2.2 Devices in panels utilizing power shall have suitable over current protection. Power shall not be "daisy chained" from device to device; however, bridge or comb jumpers may be used on the supply side of the circuit breaker or a fuse block.

3.9.3 Space heaters in enclosures, when furnished, shall be rated 240 V AC with required heat output when operated with 120 V AC. [Section 5.4.5]

3.9.4 Cables and Wiring
[Section 5.5]

3.9.4.1 Other than the special cables furnished by Supplier, cables shall be in accordance with the following:[Section 5.5.2]

a) Low voltage power and control cables shall be stranded copper, 600 V type XHHW-2 or Buyer-approved equivalent.

b) Where applicable, cables shall be rated for the radiation dose rates and service life in the environment specified by the primary specification.

c) Internal wiring shall be stranded copper, flame-retardant, 600 V, synthetic heat resistant (SIS), or machine tool wire (MTW), or high-flexible thermoset.

d) The minimum size of conductor will be as follows (not including cabling integral to components):

DUTY	External Conductor Size (AWG)	Internal Wiring in enclosures Size (AWG)
Power and Lighting (480 V and below only)	12	14
Current Transformer Wiring	10	10
Control Circuits (120 V AC / 125 V DC) and Instrument power circuits	14	16

e) Approximately 10% spare conductors shall be included in multi-conductor 300 V analog and low-level signal cables. Spare conductors shall be terminated on the terminal blocks. [24590-WTP-3PN-EKP0-00004]

3.9.4.2 Interconnecting wiring or cabling for packaged units furnished by supplier, shall be terminated and tested according to this specification. [Section 5.5.3]

3.9.4.2.1 Internal wiring shall be continuous from terminal to terminal without splices (except devices with pig tails). Bridge or comb jumpers are preferred to wire jumpers on terminal strips. Jumpers shall not be installed on field side of the terminal strip. [Section 5.5.3.1]

3.9.4.2.2 Circuits of different voltages (service level) shall be terminated on physically separate terminal strips and clearly labeled to show the circuit voltage. Terminal blocks shall be segregated according to signal type. [Partial Section 5.5.3.3]

3.9.4.2.3 AC power shall be routed through separate wireways or separated with a divider from 24 VDC discrete and analog instrument signals within enclosures. Power and signal cabling shall not be run in parallel, except in separate wireways, and should cross at a 90-degree angle only. [Section 5.5.3.4]

3.9.4.3 The Supplier shall furnish terminal boxes or control panels as follows: [Partial Section 5.5.4]

3.9.4.3.1 Instrumentation cables shall be terminated in separate junction boxes from the power and control cables.

3.9.4.3.2 Where cables supplied and installed by Buyer are run to the package unit, the Supplier shall provide space for installing and terminating the cables.

3.9.4.4 Wiring for electronic, instrument, communication and signal cables shall be segregated from both power and control cables. [Section 5.5.5]

3.9.5 Conduit System

3.9.5.1 Wiring shall be installed in metal conduit. Minimum conduit size shall be ¾ inch. ½ inch conduit is allowed when connecting to devices with ½ inch hubs. [Section 5.6.1.1]

3.9.5.2 Liquid-tight flexible metallic conduit shall preferably be used to isolate the transmission of vibration to the conduit system, and for connection to equipment which may be periodically removed. [Section 5.6.1.2]

3.9.5.3 Where conduit is exposed to potential water spray (outdoor or indoor), it shall be sloped for drainage. A stainless steel breather shall be installed at the high point of the conduit system, and a stainless steel drain shall be installed at the low point of vertical conduit runs complying with UL and NFPA standards. [Section 5.6.1.4]

3.9.5.4 Conduit connections to junction boxes shall be made using watertight threaded hubs or factory threaded hubs. [Section 5.6.1.5]

3.9.5.5 Enclosures shall be designed for front access only unless otherwise specified. All components and equipment in enclosure shall be accessible and removable from the front. Enclosures shall be suitably rated for the environment specified. [Section 5.6.4]

3.9.6 Non-current carrying metallic parts of electrical equipment shall be bonded together and made electrically continuous. Two grounding pads shall be furnished at diagonally opposite corners at the edge of skids for connection by the Buyer to the area ground grid. [Section 5.7.1]

3.9.7 Electrical equipment on the packaged unit shall be bonded to the package unit skid. [Section 5.7.2]

3.9.8 Nameplates
[Section 5.10]

3.9.8.1 Permanent nameplates or labels shall be provided to identify terminal blocks within the compartments.

3.9.8.2 Exterior nameplates shall be made of laminated, beveled plastic of manufacturer's standard, with black lettering or numbering on a white background and shall be

permanently affixed on the exterior. The method of affixing shall not violate the NEMA rating of the enclosure. [Section 5.10.2]

3.9.8.3 Interior labels for all devices, parts and components shall be machine printed, permanent and self-adhesive labels.

3.10 Low Voltage Induction Motors

3.10.1.1 Motor drive combination shall be suitable for operation for the design conditions shown on the Blower Data Sheets.

3.10.1.2 Induction motors shall be in accordance with Specification 24590-WTP-3PS-MUMI-T0002, Low Voltage Induction Motors, and as indicated on the motor data sheets appended to the Blower Data Sheets except:

- Motors may have cast iron rotor cages.
- Motors space heater are required for the purpose of long term storage. The motor space heaters do not have to be removable. See specification 24590-WTP-3PS-MUMI-T0002, Section 3.4 for heater requirements.

3.10.1.3 Drive motors shall be specifically designed and constructed for use with adjustable speed drives in conformance with NEMA MG-1 Part 31 criteria. Manufacturer shall provide certification to the Buyer that the motor is compatible with an adjustable speed drive and will perform within the specified duty range without incident.

3.10.1.4 Transient voltage variations due to short circuits, disturbances from outside supplies, and their effect on plant operation cannot be avoided. The following criteria shall apply in such cases: Momentary voltage depression down to 80% of rated equipment voltage shall not affect equipment operations.

3.10.1.5 The motor shall have a rated horsepower minimum of 115% of the design brake horsepower (bhp) listed on the Blower Data Sheets. The motor shall also have a service factor of 1.15 at its rated horsepower.

3.11 Instrumentation and Control Requirements

[Source: 24590-WTP-3PS-JQ07-T0001, Rev 2]

3.11.1 The Buyer will provide normal power for the Supplier's instruments. Each source will be delivered at 120 VAC, single phase, 60 Hz, grounded system. 480 VAC, 3 phase, 60 Hz power will be provided as required for motors. All other voltages required by the Supplier shall be derived from the Buyer provided 120 VAC or 480 VAC. [Section 1.7.3]

3.11.2 Table 1 of this specification includes a list of recommended suppliers of instruments. Bidder's proposal shall include cost associated with the use of Buyer designated instruments. [Appended Section 3.4.1, 24590-WTP-3PN-JQ07-00012]

Table 1. Instrument Supplier List

Description	Supplier	Comments
Temperature Sensor(RTD)	Daily Thermetrics	
	IST Conax Nuclear	ITS OK for Rad service
	Emerson (Rosemount)	
	Temp-Pro Inc.	
	Thermoelectric	OK for Rad service
	United Electric	
Speed Sensor	Air-Pax	
	Electro-Sensors	

3.11.3 Instrument ranges shall be selected such that the normal operating point is between 35% and 75% of the range of the instrument. Except where the Buyer has specifically identified manufacturer and model, all the instruments shall be selected by the Supplier in accordance with guidelines provided herein. The instruments described below shall be selected to meet the required safety classification, specified quality, and the design criteria stated herein and in the primary equipment specification. The systems designed and fabricated shall meet the specified reliability and availability for each system or component.

The Supplier may suggest alternative instruments based on their past experience with similar applications subject to the Buyer's review and concurrence. [Section 3.4.5]

3.11.4 Temperature measurement devices shall be selected that are optimized for the application and environment of the measurement services. This includes installation constraints, ambient conditions, and process conditions of the measurement devices. The following describes the Buyer's requirements for specific types of temperature measuring elements and systems. [Section 3.4.5.2]

- All temperature elements, Thermocouples (T/Cs) or Resistance Temperature Devices (RTDs), shall be installed in thermowells to permit removal without process disturbance except where there is no risk to personnel from the process fluid during removal of the measuring element, i.e. shell skin, motor bearings and motor windings. Where a thermowell is not used, a permanent label shall be affixed to the primary element, indicating that there is no thermowell.

- Sheathed RTDs with transmitters shall be used for remote temperature indication.

- RTD elements shall be Platinum with a nominal resistance of 100 Ohm at 0 °C (32 °F). The resistance-vs.-temperature characteristic curve shall conform to DIN 43760, IEC 60751 with a temperature coefficient of 0.00385 ohms/ohm/°C. Three wire element design shall be used.

- RTDs shall be sheathed with Magnesium Oxide insulation. The sheath shall be 316SS and ¼" diameter as a minimum. All T/Cs or RTDs shall be duplex design, spring loaded, and supplied with a connection head with internal grounding screw and external ground terminal. All elements shall be connected in the connection head.

- Temperature measurements using RTDs shall use remote mounted transmitters with the appropriate input/output voltage isolation and located in the field or panel to connect an isolated signal to the Buyer's or Supplier's control system. [Section 3.4.5.2.1]

3.11.5 If specified on the data sheets, the Supplier shall provide and install non-contacting vibration and position sensor probes for machine monitoring of both radial vibration. and thrust position of the shaft. The installation of all bearing thermocouple and shaft position monitoring equipment shall be in accordance with API 670. Bearing thermocouples shall be type E calibration. [Section 3.4.5.16.1, *Instrumentation*, 24590-WTP-3PS-JQ07-T0001]

3.11.6 If required on Blower Data Sheet, speed transmitters shall have sensors of non-contact type. [Altered Section 3.4.5.16.2]

3.11.7 All enclosures, cabinets, panels, and racks shall be designed and fabricated to be in full compliance with NFPA 70-1999. [Partial Section 3.6]

3.11.7.1 All enclosures shall be designed for front access only unless otherwise specified. All components and equipment in the enclosure shall be accessible and removable from the front. Enclosures shall be indoor per the NEMA 250 and ICS 6 standards based on the environmental specification requirements. A NEMA rating of 12 shall be the minimum acceptable requirement for indoor enclosures. In areas where radioactive contamination is likely, only stainless steel enclosures shall be used. [Section 3.6.1]

3.11.7.2 All packaged systems and equipment controls shall be pre-wired to terminal blocks in permanently mounted enclosure.

The terminal blocks shall be designed for easy interconnection to Buyer's control and communication circuits.

Access to enclosure internal components or equipment shall not require the use of hand tools. Access to any component within the enclosure for maintenance or replacement shall not be prevented by proximity to other components within the enclosure. Equipment mounted in the rear of the enclosure shall be on a back-panel and positioned to facilitate removal and replacement. Enclosure back-panels shall be fabricated from low-carbon steel and shall be finished with semi-gloss or gloss white paint. Enclosures shall be sized to allow clearance between the enclosed components, cables, print pockets, and components mounted on the door. [Partial Section 3.6.3]

3.11.7.3 The enclosure grounding system shall be installed in conformance to IEEE Guide 1050-1996, section 5.3.1 "Single point grounding system". Instrument junction box shall only have an equipment safety ground. The grounding bus shall be constructed with solid copper, and all connections shall be drilled and tapped. The ground bus shall be drilled and tapped for an additional 20 percent spare terminations.

The equipment safety ground bus shall be solidly bolted to the enclosure structure. A bolted compression type 2/0 terminal lug shall be installed at each end of the bus to facilitate connection of Buyer's 2/0 AWG stranded copper ground cable.

All removable metal components, instruments, or electrical devices shall be connected via individual conductors to the equipment safety ground bus. Components shall not be grounded to each other via a common wire connecting the components to the equipment safety ground bus. Enclosure door and back-panel shall be connected to the equipment safety ground bus via individual conductors. Ground conductors connected to the equipment safety ground bus shall have an insulation color code of green.

The isolated signal ground bus shall be electrically isolated from the enclosure structure and the safety ground bus. A bolted compression type 2/0 terminal lug shall be installed at each end of the isolated ground bus to facilitate connection either to another isolated signal ground bus in a connected adjacent enclosure or to Buyer's 2/0 AWG stranded copper ground cable.

Instrument cable shields and signal common conductors shall be connected to the isolated signal ground bus. Each signal ground conductor shall be fastened to the isolated signal ground bus. For junction boxes with signal wiring going back to the Buyer's control system, the cable shield shall be terminated on a isolated terminal block and carried back to a ground supplied by the Buyer. Ground conductors connected to the isolated signal ground bus shall have an insulation color code of green with yellow tracer. [Section 3.6.5]

3.11.7.4 The Supplier shall mount, connect and wire each instrument or control device such that adjustment, maintenance, removal and replacement may be accomplished in a safe manner without interruption of service to adjacent but unrelated equipment and without placing undue stress on installed wiring or devices. Accommodations for strain relief shall be made when routing wire to hinged enclosure doors and shall be wrapped with spiral wire wrap.

No more than two wires shall be connected to one terminal point and only if the terminal is rated for the two wires. Wire splicing shall not be used unless approved by the Buyer. Bridge or comb jumpers are preferred to wire jumpers on terminal strips. Jumpers shall not be installed on the field side of the terminal strip.

Terminal blocks shall be selected to accommodate the function and electrical requirements associated with each wiring application. They shall incorporate the following features:

1. Space saving design
2. Screw clamp wire connection

3. Single level configuration
4. Integral test facilities
5. DIN-rail (35mm) mounted

Isolating type terminal blocks shall be Weidmuller "W" series, Allen Bradley 1492-WKD3TP, Phoenix Contact, or Buyer approved equal. Non-isolating feed-thru terminal blocks shall be Weidmuller "W" series, Allen Bradley 1492-W4, Phoenix Contact, or Buyer approved equal. All terminal blocks shall be identified by a unique terminal block number and approved by the Buyer.

For all enclosures, each incoming power supply shall have a manually actuated electrical power disconnect device mounted on/in the enclosure in an easily accessible location. The electrical power disconnect device may be a single device or multiple devices for individual circuits. Each device that uses 120 VAC for power shall have individual connections protected via rail mounted circuit breakers. The circuit breakers used for individual control or power circuit protection in the enclosure shall be thermal magnetic breakers such as Weidmuller CB, Allen Bradley type 1492-GH, Phoenix Contact, or Buyer approved equal. They shall be Dual-In-Line, DIN-rail mountable TS35, TS32, or equivalent. Power shall not be "daisy chained" from instrument to instrument; however, the bridge or comb jumpers may be used on the supply side of the circuit breakers. A fuse and circuit breaker directory shall be contained in a holder permanently affixed on the inside of each door or back-panel and protected by a clear window.

AC power shall be routed through separate wireways or separated with a divider from 24 VDC discrete and analog instrument signals within enclosures. Power and signal cabling shall not be run in parallel, except in separate wireways, and should cross at a 90-degree angle only.

All instrument signal cables shall be of the type and specification as listed in Table 2 - Instrumentation Cable Schedule. Power cable, wire size and type shall be in accordance with Section 3.9.4.1 d).

Table 2. Instrumentation Cable Schedule

Cable Code	Cable Description	Specific Cable Spec.	Comments	Circuit Identification	Cable General Specification
1TSPR#16	Single twisted pr. #16 AWG, 300 V, ITC, PLTC	Single twisted pair with overall foil shield	Individual instrument signals, instrument 24 vdc power	Black, White	Cables UL listed as ITC and PLTC, 300 V insulation, UL 1581 listed for 70,000 BTU vertical tray flame test; 100% foil polyester/aluminum individual and overall shields with 22AWG Drain wire. Each circuit shall have a minimum of 6-8 twists/ft.
2TSPR#16	Two twisted shielded pr # 16AWG, 300V, ITC, PLTC	individually twisted shielded pairs with overall foil shield		Black, White conductors - individual circuits numbers	

All wires and cables external to an enclosure shall be of the instrument tray cable (ITC) type, flame-retardant (passes IEEE 1202 vertical flame test), and have a 90 °C continuous rating in wet or dry locations. All cable insulation and jacket material shall be resistant to heat, moisture, impact, ozone, and meet or exceed the following requirements:

- 300 V rated for low voltage instrument cables (operating at 150 volts or less and 5 amperes or less)
- 600 V rated for power/motor control cables (up to 480 VAC and 250 VDC)

The wire insulation color for power wiring shall be of the following:

• Black	Ungrounded conductors more than 50 VAC
• White	Grounded conductors more than 50 VAC
• Green	Equipment grounding wire
• Green/Yellow tracer	Isolated instrument grounding wire
• Light Blue	Ungrounded supply voltage less than 50 V (DC or AC)
• Violet	Switched ungrounded voltage less than 50 V (DC or AC)
• White/Blue tracer	Grounded or return supply voltage less than 50 V (DC or AC)

[Partial Section 3.6.6]

3.11.7.5 The enclosures shall be designed so that tools and test equipment may be used to accomplish all necessary adjustments, maintenance, cleaning, testing, and calibration. If specialized tools are needed for adjustments, maintenance, cleaning, testing, and calibration the Supplier shall provide two sets per order to Buyer upon delivery. Test points and calibration areas shall be accessible, clearly identified, and labeled. Adequate space shall be provided for removal and replacement of individual instruments or components located inside the enclosure. Equipment mounted in the rear of the enclosure shall be positioned to facilitate removal and replacement from the front of the enclosure. [Section 3.6.7]

3.11.7.6 Buyer will provide the enclosure name, service description, and wire marker syntax and name/number.

Safety Labels shall not be attached to removable items that could be replaced in a different orientation.

Each wire shall be clearly identified with a wire marker at each end by means of heat shrinkable plastic sleeves or other Buyer approved permanent type wire marker in black text on white background. Open markers or "C" type sleeves that can be applied after a conductor is terminated will not be accepted. Minimum character size for wire marker shall be no less than 3/32 inch. The wire markers shall be attached within a maximum of 2 inches from the termination of the wire. Orientation of the wire marker shall be such that its identification is visible when viewed from the front of the enclosure looking in. [Partial Section 3.6.8]

3.11.8 All Supplier provided wiring shall be identified at each end with a numbering system that is cross-referenced on all appropriate drawings. The wire-numbering scheme shall be proposed by the Supplier with Buyer's concurrence. Ferrules or wire markers shall be indelibly and clearly marked in black on white plastic, heat shrinkable sleeves. Open markers or "C" type sleeves that can be applied after a conductor is terminated will not be accepted. Junction box (JB) terminals shall have adequate space between them and the JB internal walls so connected cables and individual wire numbers can be easily read without disturbing the wiring within the JBs.

All cables provided by the Supplier shall be clearly identified with a heat shrink type label. [Section 3.7.8]

3.11.9 Instrument mounting locations shall be selected with consideration of both function operation and accessibility requirements for maintenance. Instrumentation should not be mounted on vibrating equipment or light duty support. Instrument mounting bolting and hardware shall be 316 SS. [Section 3.8.8]

3.11.10 Each instrument shall be installed so as to allow adequate safe access for both operation and maintenance. [Section 3.8.8.2]

3.11.11 Each Instrument shall have nameplate information that includes the following:

- Manufacturer's Name
- Manufacturer's model and serial number
- Buyer's Purchase Order No.
- Buyer's Item No.
- Buyer's Tag Number
- Power Rating
- Electrical Area Classification
- Approvals and Listing per NEC

Where the combination of manufacturer's standard nameplate and instrument body stampings are unable to accommodate all of the required and applicable information, a separate stainless steel nameplate shall be provided to include the Buyer's tag number, PO number, and all of the applicable missing information. This separate stainless steel nameplate shall have the information impressed, stamped or etched directly on the stainless steel surface. The nameplate, where physically possible, shall be secured to the body of the instrument by corrosion resistant screws tapped into a low stress area of the assembly, so the structural integrity and functional capability of the assembly are not impaired. If it is not physically possible to secure the nameplate to the body of the instrument, then the nameplate shall be attached using a stainless steel wire. [Section 8.1]

3.12 Accessibility and Maintenance

3.12.1.1 Seller's recommended accessibility and recommended spares for each piece of equipment shall be included in the Seller's submittal.

3.12.1.2 Seller shall provide the inspection and maintenance requirements with the recommended intervals to be performed by Buyer.

3.13 Accessories

3.13.1 Unitary Inertia Bases

3.13.1.1 When indicated on the Blower Data Sheets, blowers shall be provided with a unitary inertia base.

3.13.1.2 Unitary inertia base shall provide a common support for the unit and its drive motor. Inertia base shall be fabricated from structural steel conforming to ASTM A36, at the minimum, and shall include pre-drilled mounting templates and sleeved anchor bolts for the fan and its drive motor. Inertia base frame shall be structural channel or beam frame with its depth at least one-tenth (1/10th) the longest dimension of the base, as a minimum.

3.13.2 Vibration Isolators

3.13.2.1 When installation is specified on the data sheet, the vibration isolators shall be Supplier specified and supplied. Supplier shall specify the isolator manufacturer and model number, spring minimum diameter, and spring restraint features on the Blower Data Sheet.

3.13.2.2 Spring mounts shall be selected to provide 2 in. minimum deflection at design loading, and shall allow for 50 % additional travel to solid. Spring mounts shall incorporate seismic restraint capability for a seismic occurrence as defined in Specifications 24590-WTP-3PS-SS90-T0001, Seismic Qualification of Seismic Category I/II Equipment and Tanks or 24590-WTP-3PS-FB01-T0001, Structural Design Loads for Seismic Category III & IV Equipment and Tanks. Spring mounts shall include enlarged base plates for seismic anchoring.

3.13.2.3 Submittal drawings shall show locations for vibration isolator placement on blower assemblies when installation is specified on the data sheet.

3.13.2.4 Each vibration isolator shall deflect equally under the conditions of dynamic loading.

3.13.3 Flexible Connectors

3.13.3.1 When specified on the data sheet, Supplier shall provide flexible connectors. Supplier shall specify the connector manufacturer and model number on the blower data sheet.

3.13.3.2 When specified on the data sheet, submittal drawings shall show locations for or placement of flexible connectors on blower assemblies.

4 Materials

4.1 Construction

4.1.1 Materials of construction shall conform to ASME AG-1, Section BA, Article BA-3000, Table BA-3100 and the Blower Data Sheets as applicable.

4.1.2 The ASME and/or ASTM material numbers and grades shall be identified and shall be indicated on the fabrication drawings and in the material lists.

4.1.3 Blower bearing pedestals and motor bases shall be fabricated from structural steel shapes and plates properly reinforced for maximum rigidity.

4.1.4 Blower housings shall be fabricated from materials specified in Blower Data Sheets.

4.2 Prohibited Materials

4.2.1 Bronze, copper, lead, zinc, tin, antimony, cadmium, or other low melting point metals, their alloys, or materials containing such metals as their basic constituents or molybdenum, and materials with halogen content of more than 200 ppm shall not be used in direct contact with stainless steel.

4.2.2 Asbestos and Teflon shall not be used in any component of the blowers or accessories.

4.2.3 Certain chemicals and materials are restricted from use at WTP. Restricted chemicals and materials are given in 24590-WTP-CON-08-0001, Restricted Materials List. Inclusion of these chemicals/materials requires specific authorization from the Buyer (WTP Safety Assurance).

4.3 Special Requirements

4.3.1 When evaluating and dedicating new or replacement commercial grade items (CGI) and commercial grade services (CGS) for use in safety applications the requirements in specification 24590-WTP-3PS-G000-T0019, Acquisition of Commercial Items and Services for Use in Safety Applications at WTP, shall be followed.

5 Fabrication

5.1 Fabrication of Blowers

5.1.1 Fabrication of blowers shall be as specified in ASME AG-1, Article BA-6000.

5.1.2 Blower wheels / impellers shall be of the type and fabricated from materials specified in Blower data sheets.

5.2 Welding

5.2.1 All fabrication, welding, inspection and repair procedures of blower wheels, blower housing, housing framing and supports shall conform with the following, as applicable:

- AWS D1.1, Structural Welding Code, Steel
- AWS D1.3, Structural Welding Code, Sheet Steel
- AWS D1.6, Structural Welding Code, Stainless Steel
- AWS D9.1, Sheet Metal Welding Code

- AWS D14.6, Welding of Rotating Elements of Equipment

5.2.2 Repairs required as a result of weld rejection by either Buyer or Seller's final inspection shall be fully documented in accordance with Seller's QA program. Weld repair records shall be included with document package.

5.2.3 Welding procedures and procedure qualification records shall be submitted to Buyer for review and permission to proceed prior to use. Each procedure shall be prepared and qualified in accordance with the requirements of the above listed standards or ASME B & PVC, Section IX.

5.2.4 Welds shall be inspected in accordance with ASME AG-1, Article AA-6330.

6 Tests and Inspections

6.1 General

6.1.1 Inspection and testing of blowers shall conform to ASME AG-1, Section BA, Article BA-5000. Seller shall conduct and shall be responsible for the shop tests called for in this specification and in applicable standard and referenced documents. Seller shall furnish all facilities necessary for the performance of such tests.

6.2 Personnel Qualifications

6.2.1 Personnel performing nondestructive examination or reviewing nondestructive examination results shall be qualified in accordance with ASNT-SNT-TC-1A, Level II or Level III. Qualifications of personnel performing inspections and tests shall be verified by the Seller.

6.3 Non-Destructive Examinations

6.3.1 Seller shall perform Non-Destructive Examinations. Non-Destructive examinations may include visual, ultrasonic, radiographic, magnetic particle, liquid penetrant and eddy current examination procedures.

6.3.2 Non-Destructive Examination procedures shall be submitted to Buyer for review and permission to proceed prior to use.

6.3.3 All pressure boundary parts made by casting shall be demonstrated to be surface-defect free by penetrant examination using Type I Method A techniques in accordance with ASME BPVC Section V.

6.3.4 As a minimum all welds shall be 100% Visually Tested (VT) and pressure boundary welds shall be Liquid Penetrant Tested (PT). NDE reports shall be submitted for review and acceptance.

6.4 Shop Tests

Buyer's Inspector will indicate tests and inspections that the inspector intends to witness after review of Seller's work plan. Seller shall perform standard factory tests, which, as a minimum, includes the following tests listed below, as well as tests called out in referenced specifications.

Test procedures shall be submitted for acceptance and permission to proceed prior to testing.

All test results shall be certified, documented, and submitted to Buyer for review, and permission to proceed. All test reports shall be accepted by Buyer based on the acceptance criteria outlined in the Supplier's accepted test procedures.

The Inspector may witness the following required shop tests:

6.4.1 Test for blower performance. Performance testing shall be done for similar sized blowers.

6.4.1.1 Blower performance tests shall be conducted in accordance with AMCA standards and shall be done in AMCA certified facilities unless otherwise approved by Buyer. Inspection and test procedures shall be submitted to Buyer.

6.4.2 Functional performance test for electrical equipment.

6.4.2.1 The Supplier's shop tests shall include the following:

a) Megger test before termination of all wires pulled into conduit.
b) Continuity check of all wiring for conformance with drawings
c) Complete functional test of all apparatus and equipment
[24590-3PS-WTP-EKP0-T0001, Rev 3, Section 6.1.1]

6.4.2.2 The Supplier shall notify the Buyer at least two weeks prior to any final tests. The Buyer or his representative reserves the right to inspect the equipment and/or witness the tests at the factory. [24590-3PS-WTP-EKP0-T0001, Rev 3, Section 6.1.2]

6.4.2.3 The Supplier shall isolate all instruments and control systems before performing a megger test. [24590-3PS-WTP-JQ07-T0001, Rev 2, Section 6.2.2]

6.4.2.4 All wiring [provided by the Seller shall be verified by a 100 % point to point continuity test. Wiring errors detected shall be corrected and/or drawings corrected as appropriate prior to Buyer's inspection. [24590-3PS-WTP-JQ07-T0001, Rev 2, Section 6.2.3]

6.4.3 Blowers shall be tested and accepted for leakage in accordance with Section BA-5142 of ASME AG-1.

6.4.4 Vibration performance shall be checked and reported at 10% increments of full speed blower tests. Vibration testing shall not be performed within +/- 20% of the blower's critical speed.

6.5 Site Tests

Buyer startup personnel will perform test after initial installation. Buyer may request Seller assistance during startup.

7 Preparation for Shipment

7.1 General

7.1.1 Blower assemblies shall be packaged, shipped, handled and stored in accordance with ASME AG-1 Article BA-7000 and WTP specification 24590-WTP-3PS-G000-T0003, Engineering Specification for Packaging, Handling and Storage Requirements.

7.2 Cleanliness

Seller's cleaning procedures shall be submitted to Buyer for information. Prior to surface preparation and coating application, visually examine welds, the blower impeller, air stream surfaces of the blower housing, and the air stream surfaces of all furnished accessories. Remove all dirt, oil, and grease, loose mill scale, weld spatter and other foreign matter on surfaces to be painted in accordance with Seller's cleaning and coating procedures.

7.3 Painting and Special Protective Coatings

Painting and Special Protective Coatings shall meet the requirements in 24590-3PS-WTP-AFPS-T0001, as tailored in Attachment A.

7.4 Tagging

A stainless steel nameplate shall be attached to each centrifugal fan showing the manufacturer's name, shop location, date of manufacture, serial number, equipment rating, equipment tag numbers, weight of assembly, maximum speed, other information required by Paragraph BA-9110 of ASME AG-1 and Buyer purchase order number. Instruments shall be identified with Buyer provided tag numbers.

8 Quality Assurance

8.1 QA requirements specific to item(s) or service

8.1.1 The quality assurance program requirements of this specification are those specified in the following documents:

ASME NQA-1, marked as applicable in Q data sheet of ANSI/ASME NQA-1 (2000) Quality Assurance Program Requirements, attached to the Material Requisition.

ASME NQA-1 (2000), Part II, Subpart 2.2, *QA Requirements for Packaging, Shipping, Receiving, Storage and Handling of Items for Nuclear Power Plants*

24590-WTP-3PS-G000-T0001, Engineering Specification, *Supplier Quality Assurance Program Requirements*

8.1.2 The successful bidder must pass a pre-award survey by the Buyer. Supplier shall demonstrate that their quality program is in compliance with the procurement quality requirements listed in Quality Assurance Program Requirements Datasheets. Each supplier is required to flow-down required QA program requirements to each successive tier in the supply chain. The Supplier shall allow Buyer, its agent, and DOE access to their facility and any lower tier subcontractor's facility and records pertaining to this purchase order for the purpose of QA Audits and Surveillance at mutually agreed times.

8.2 Supplier Deviation

8.2.1 Each supplier shall be required to identify and promptly document all deviations from the requirements of the procuring documents. In addition, the supplier shall be required to described the recommended disposition based on appropriate analysis. Submittals of request for deviations from lower-tier suppliers shall be through the prime supplier to WTP.

8.2.2 Supplier-proposed deviations from procurement documents shall be initiated by use of Supplier Deviation Disposition Request (SDDR) form.

9 Configuration Management

Equipment and/or components covered by this specification are identified with Component Identification System numbers shown in Blower Data Sheets. Each item shall be identified in accordance with Section 7.4.

10 Documentation and Submittals

10.1 General

Seller shall submit to Buyer Engineering and Quality Verification documents in the forms and quantities shown in Form G-321-E, *Engineering Document Requirements*, and Form G-321-V, *Quality Verification Document Requirements*, attached to the MR.

10.2 Submittals

The Seller shall submit the following:

10.2.1.1 The Seller shall submit, prior to fabrication, a matrix showing how the supplier meets the requirements of AG-1 Section BA.

10.2.1.2 Functional description of the electrical operation of the package. [Section 9.1.1, 24590-WTP-3PS-EKP0-T0001, Rev 3]

10.2.1.3 Material list with specific model number, manufacturer and catalogue cut sheets shall be submitted as part of the product data. [Section 9.1.6, 24590-WTP-3PS-EKP0-T0001, Rev 3

10.2.1.4 Supplier shall provide a list of recommended spare parts as follows: [Section 9.1.8.1, 24590-WTP-3PS-EKP0-T0001, Rev 3]

10.2.1.4.1 Startup/warranty spare parts - are those parts that may be required at any time during equipment installation, startup, testing and unit operation through the warranty period.

10.2.1.4.2 Operational spare parts - are those parts that required replacement at regular intervals to maintain continuous operation of the supplied equipment and/or system.

10.2.1.4.3 Capital spare parts - are major parts or equipment that provide reliable equipment operation throughout the plant life and having a significant lead time for manufacturer and delivery.

10.2.1.4.4 The spare parts list shall include pricing and delivery information valid for one year after delivery of the equipment. [Section 9.1.8.2, 24590-WTP-3PS-EKP0-T0001, Rev 3]

10.2.1.5 Instrument installation details shall be submitted for the Buyer's review and one month prior to proceeding with instrument installations. [Section 11.2.4,24590-WTP-3PS-JQ07-T0001 Rev 2]

10.2.1.6 Supplier shall provide manufacturer's technical literature for all technical components and instrumentation provided within the Supplier's package. [Section 11.2.12, 24590-WTP-3PS-JQ07-T0001 Rev 2]

10.2.1.7 Supplier shall provide a brief description and justification for the Mean Time Between Failure figure provided on the Blower Data Sheets.

10.2.2 Drawings

Drawings shall show the following information:

10.2.2.1 The outline dimensions of blower, including outline and detail drawings for each component (motor, etc). These drawings shall reflect the "as-shipped" configuration of the equipment and instrumentation. As a minimum, interface control drawings shall contain overall dimensions of the blower and motor , materials of construction, instrumentation interfaces and equipment mounting information including bolt hole sizes and quantities of bolts required.

10.2.2.2 Mounting dimensions and information required for the design of supports and foundations, including any special assembly instructions.

10.2.2.3 Operating weights of blower assembly including motor components.

10.2.2.4 The space required for the removal of components.

10.2.2.5 The locations of access doors.

10.2.2.6 The weights of individual components.

10.2.2.7 The locations and identification of parts that are included in the parts list.

10.2.2.8 Assembly drawings providing sufficient detail to facilitate assembly of the component parts of the blower.

10.2.2.9 Overall Single line diagram showing all electrical equipment. [Section 9.1.2, 24590-WTP-3PS-EKP0-T0001, Rev 3]

10.2.2.10 Overall layout showing location of electrical items. [Section 9.1.3, 24590-WTP-3PS-EKP0-T0001, Rev 3]

10.2.2.11 Interconnection diagram and cable schedule showing details of all internal connections and Buyer external connections. [Section 9.1.4, 24590-WTP-3PS-EKP0-T0001, Rev 3]

10.2.2.12 Individual equipment schematic diagrams, wiring diagrams, general arrangement drawings, foundation details and junction/terminal box details. [Section 9.1.5, 24590-WTP-3PS-EKP0-T0001, Rev 3]

10.2.2.13 Certified outline and dimensional drawings shall show the size and location of electrical, pneumatic and service connections and information necessary to locate and mount the equipment, if it is to be mounted by the Buyer. [Section 11.2.3, 24590-WTP-3PS-JQ07-T0001 Rev 2]

10.2.2.14 The ASTM or equivalent designation for materials.

10.2.2.15 Blower performance curves at 60%, 80%, 100%, and 110% design speed at design conditions specified on the data sheets. Preliminary performance curves shall be provided prior to submitting equipments drawings. Blower performance curves including unstable operating surge region/limit.

10.2.2.16 Identify all devices with the Buyer's tag numbers, where applicable

10.2.3 Procedures

Procedures are to be submitted to Buyer for approval prior to use and shall include:

10.2.3.1 Welding procedures

10.2.3.2 Procedures for repairs of rejected items or parts.

10.2.3.3 Cleaning and coating procedures per specification 24590-WTP-3PS-AFPS-T0001 as tailored in Attachment A.

10.2.3.4 Electrical component performance test procedures

10.2.3.5 Seller's shipping preparation and storage procedures per specification 24590-WTP-3PS-G000-T0003.

10.2.3.6 Test procedures for blower performance.

10.2.3.7 Test procedures for blower housing and shaft leakage tests.

10.2.3.8 Test procedures for sound, over-speed, vibration, and mechanical running tests.

10.2.3.9 Commercial Grade Dedication Procedures and Plans per specification 24590-WTP-3PS-G000-T0019.

10.2.3.10 Software Validation and Verification plan per specification 24590-WTP-3PS-G000-T0014.

10.2.3.11 Seismic compliance documentation for permission to proceed per specification 24590-WTP-3PS-SS90-T0001 or 24590-WTP-3PS-FB01-T0001 as applicable.

10.2.3.12 Environmental qualification test procedures in accordance with 24590-WTP-3PS-JQ06-T0005.

10.2.3.13 Non-Destructive Examination procedures

10.2.4 Inspection and Test Reports

10.2.4.1 Inspection and test plan for Buyer review and approval.

10.2.4.2 Records of repairs of rejected items or parts.

10.2.4.3 Welding inspection reports and welding repair reports if required.

10.2.4.4 Electrical component performance test reports

10.2.4.5 Blower housing and shaft seal leakage test reports

10.2.4.6 Blower performance test reports, including blower curves

10.2.4.7 Sound power levels

10.2.4.8 Blower wheel/shaft vibration, over-speed, and mechanical test reports

10.2.4.9 NRTL Field Evaluation Reports

10.2.4.10 Seismic Compliance documentation per specification 24590-WTP-3PS-SS90-T0001 or 24590-WTP-3PS-FB01-T0001 as applicable.

10.2.4.11 Commercial Grade Dedication Package per specification 24590-WTP-3PS-G000-T0019.

10.2.4.12 Software Validation and Verification report per specification 24590-WTP-3PS-G000-T0014.

10.2.4.13 Environmental qualification test report in accordance with 24590-WTP-3PS-JQ06-T0005.

10.2.4.14 Non-Destructive Examination reports

10.2.5 Calculations

10.2.5.1 Calculations shall be in accordance with 24590-WTP-3PS-G000-T0014, Engineering Specification for Supplier Design Analysis.

10.2.6 Manuals

Manuals and instructions shall include:

10.2.6.1 Erection and installation manuals which provide complete, detailed procedures for installing and placing equipment in initial operation. The manuals shall include all erection and installation drawings.

10.2.6.2 Operation and maintenance manuals which provide complete, detailed descriptions of components and accessories with data sheets showing design, construction and performance data for equipment. Manuals shall include drawings required for operation (duplication of drawings shall be avoided, drawings submitted to fulfill other requirements shall be referenced with Buyer provided numbering), maintenance and repair, maintenance requirements, instructions and operational troubleshooting guides. All manuals/drawings shall include OEM part numbers.

10.2.6.3 Instruction manuals shall cover all major components such as blowers, motors, controls, and instrumentation, including those purchased from a subcontractor. The Seller shall obtain such manuals and lists, and submit them to the Buyer.

10.2.6.4 The Seller shall provide instructions regarding site long and short and long term storage up to 5 years, and preparation and protection of equipment after installation and prior to operation.

10.2.6.5 Where manuals include information applicable to several components, sizes or models, non-applicable information shall be lined-out.

10.2.7 Certificates of Conformance

10.2.7.1 Seller shall certify lifting eyes or lugs and/or spreader bars are suitable for the safe, balanced lifting, and handling of the equipment.

10.2.8 Schedules

Lists and schedules shall include:

10.2.8.1 Schedule of engineering, fabrication, and testing.

10.2.8.2 Parts list, and cost for parts and items subject to deterioration and replacement. Seller to state shelf life and storage requirements for spare parts.

10.2.8.3 Schedule of maintenance and part replacements required to maintain the equipment qualification in accordance with requirements in section 6 of specifications, 24590-WTP-3PS-JQ06-T0005, Engineering Specification for Environmental Qualification of Control and Electrical Systems.

10.2.9 Materials Certificates

10.2.9.1 Material test reports of chemical and physical properties shall be provided for all stress components of the blowers, including the blower impeller and its components, blower shaft, and housings in accordance with ASME AG-1, BA-3400.

10.2.9.2 Manufacturer's Material Certificate of Conformance shall be provided for scrolls, housing side plates, inlets, support framing integral to the blower, and weld filler metal in accordance with ASME AG-1, BA-3410.

10.2.9.3 Certificates of calibration referenced to NIST traceable standards required for any calibrated instrumentation provided with the equipment.

10.2.10 Data

Data shall include:

10.2.10.1 Buyer's data sheets, completely filled out by the Seller, showing all information required to determine that the units are of the design and materials specified herein, including motor data sheets.

10.2.10.2 Buyer's equipment qualification data sheets, completely filled out by the Seller, showing all information required to determine that the units are of the design and materials specified herein, including motor data sheets.

10.2.10.3 Acoustic data report. Sound test data from similar equipment previously tested can be submitted in lieu of test for the purchased equipment.

Attachment A Tailored version of specification 24590-WTP-3PS-AFPS-T0001, Shop Applied Special Protective Coatings for Steel Items and Equipment

NOTE: Only the sections and appendices contained in this Attachment apply to the Single Stage High Integrity Centrifugal Fans and Blowers specification.

Contents

1 Scope A-4
2 General A-4
2.1 Responsibility A-4
2.2 Surfaces Not To Be Coated A-5
2.3 Definitions A-5
2.4 Safety A-6
3 Applicable Documents A-6
3.1 Codes and Standards A-6
4 Submittals A-7
5 Quality Plan A-8
5.1 General A-8
6 Materials A-8
6.1 Coating Materials A-8
6.2 Manufacturer's Standard Coating A-9
6.3 Machined-Surfaces Coating A-9
6.4 Coating Over Stainless Steel A-9
6.5 Batch Information A-10
6.6 Abrasives A-10
7 Application A-10
7.1 General A-10
7.2 Pre-Surface Preparation A-11
7.3 Surface Preparation A-11
7.4 Coating Application A-13
7.5 Remedial Work A-14
8 Inspection A-15
8.2 Surface Preparation Inspection A-17
8.3 Coating Application A-18
9 Storage, Handling and Shipping of Coating Materials A-18
9.1 Coating Materials A-18
9.2 Steel Items and Equipment A-19

10 Documentation A-20

Appendices

Appendix A Coating Materials/Coating Systems A-A-1
Appendix B Coating Manufacturer's Product Identity Certification Record A-B-1
Appendix C Surface Preparation and Coating Inspection Form A-C-1
Appendix D Manufacturer's Standard Coating Data Sheet A-D-1

1 Scope

1.1 This specification defines the minimum requirements for Special Protective Coating (SPC) materials/coating systems, surface preparation, application, and inspection of protective coatings to be shop applied. Items and surfaces to be coated shall be coated in accordance with this specification. Unless indicated otherwise in the base technical specification/material requisition or purchase order, all coats will be shop applied. Finish color shall be ANSI 70 Gray unless indicated otherwise in Section 2.0 of the Material Requisition (MR). [Section 1.1]

1.2 All Special Protective Coatings (SPC's) are designated as Commercial Grade (CM) and non-safety. [Section 1.2]

2 General

2.1 Responsibility

2.1.1 The SELLER shall supply all personnel, coating materials and all necessary surface preparation, application, inspection and other equipment as required. [Section 2.1.1]

2.1.2 The SELLER shall unload, inspect, and store all inbound steel items and equipment scheduled for coating when manufactured by others. Items found to be damaged or otherwise unsuitable for coating shall be identified and segregated for evaluation by the SELLER. [Section 2.1.2]

2.1.3 The SELLER shall store all coating materials, perform surface preparation, coating application and inspection in accordance with this specification and Buyer reviewed procedures. The coating systems and associated coating materials used shall be in accordance with Appendix A or the Material Requisition (MR) when coatings are specifically identified. [Section 2.1.3]

2.1.4 The SELLER shall perform all inspections and tests contained in this specification as necessary prior to verification by the BUYER. [Section 2.1.4]

2.1.5 The SELLER shall provide application and inspection documentation for all coating Work in accordance with this specification. [Section 2.1.5]

2.1.6 The SELLER shall provide environmental control equipment as necessary for coating application and curing. [Section 2.1.6]

2.1.7 The SELLER shall provide erection marking. Marks for color-coding of bulk materials and erection marking shall be fully compatible with the coating system specified. [Section 2.1.7]

2.1.8 The SELLER shall touch-up and repair defective or damaged coating in accordance with procedures submitted and reviewed by the BUYER. [Section 2.1.8]

2.1.9 The SELLER shall protect all coated surfaces prior to shipment and provide suitable coverings, padding and strapping to protect coated items during shipment. [Section 2.1.9]

2.1.10 The SELLER shall only use inspection equipment that is currently (in date) calibrated. [Section 2.1.10]

2.2 Surfaces Not To Be Coated

2.2.1 Hold back coating from weld areas- [Section 2.2.1]

2.2.1.1 Three (3) to Four (4) inches for **shop** welds when using epoxy or other types of organic coatings. [Section 2.2.1.2]

2.2.1.2 Note - The above coating hold back dimensions are only for items previously coated prior to welding. These coating hold back dimensions do not apply to shop welds that will be coated after welding is completed. This Section of the shop coating spec does not have anything to do with coating hold back requirements associated with visual inspection of welds during hydro testing. Coating hold back requirements associated with weld inspection must come from the prevailing code. [Section 2.2.1.4]

2.2.1.3 If the coating hold back at field welds is greater than 50% of the surface area of the item then the item does not required shop coating, however the items shall be blasted to remove all mill scale. [Section 2.2.1.5]

2.2.1.4 The coating hold back shall be sufficient to expose the entire shop weld for visual inspection on items fabricated prior to coating. [Section 2.2.1.6]

2.2.2 Name and instruction plates, etc. [Section 2.2.2]

2.2.3 Rubber or similar nonmetallic parts. [Section 2.2.3]

2.2.4 Machined surfaces. [Section 2.2.4]

2.2.5 Non-Ferrous metals unless otherwise specified. [Section 2.2.5]

2.2.6 Stainless Steel surfaces, unless specifically required by the BUYER (areas where stainless steel is welded to carbon steel the coating overlap onto the stainless steel shall be approximately 1" or as otherwise specified.) [Section 2.2.6]

2.3 Definitions

2.3.1 Batch- A quantity of coating made in one production run. A unique batch number is assigned for each production run of the coating material, curing agent, zinc powders, fillers and thinner. [Section 2.3.1]

2.3.2 Dry Film Thickness (DFT)- The thickness of an applied coating, once dry or cured. Usually expressed in mils (each mil is 1/1000 inch). [Section 2.3.3]

2.3.3 Fish Eyes (cratering)- Formation of holes or visible depression in the coating film. Usually from a contaminated particle on the surface prior to applying the coating. [Section 2.3.4]

2.3.4 Holiday- A Pinhole, skip, discontinuity, or void in the applied coating film. [Section 2.3.5]

2.3.5 Mfg. Std. Coating- A manufacturers standard coatings system applied to off the shelf items or standard line items of routine manufacture that are not specifically manufactured for the WTP project. [Section 2.3.7]

2.3.6 NIST- National Institute of Standards and Technology. [Section 2.3.8]

2.3.7 Pinholes- Minute holes visible in the applied coating without magnification that appears to penetrate one or more layers of the coating film. [Section 2.3.10]

2.3.8 Profile- The surface roughness resulting from surface preparation by abrasive blasting or other authorized methods. (Refer to Section 7.3.6). [Section 2.3.11]

2.3.9 Sag- The running of freshly applied coating on a vertical surface due to being applied too thick. (Same definition for runs and drips) [Section 2.3.13]

2.3.10 Training and Certification- Training shall include an understanding of the specification, work procedures and manufacturers published instructions. Certification shall include a documented performance test demonstrating quality work verifiable by the BUYER. (Refer to Sections 4.5, 5.1.6, 7.1.2, and 8.1.1.1) [Section 2.3.16]

2.4 Safety

2.4.1 The SELLER shall comply fully with OSHA Hazard Communication Standard 29CFR 1910. Material Safety Data Sheets (MSDS) for all materials, including thinners and cleaning solvents, shall be obtained from the materials manufacturer and upon request made available, at the place and time of Work, for review. [Section 2.4.2]

2.4.2 The Volatile Organic Compound (VOC) content of all materials shall comply with Federal, State and Local or other Regulatory requirements. [Section 2.4.3]

3 Applicable Documents

3.1 Codes and Standards

3.1.1 American Society for Testing and Materials (ASTM)

ASTM E337- R96; 02	Test for Relative Humidity by Wet-and-Dry Bulb Psychrometer
ASTM D3276- 00; 05	Standard Guide for Painting Inspectors (Metal Substrates)
ASTM D4285- 99	Test Method for Indicating Oil or Water in Compressed Air
ASTM D4417- 99; 03	Field Measurement of Surface Profile of Blast Cleaned Steel
ASTM D4537- 96; 04; 04a	Standard Guide for Establishing Procedures to Qualify and Certify Inspection Personnel for Coating Work Inspectors in Nuclear Facilities.
ASTM D4940- 98; 03	Test for Conductimetric Analysis of Water Soluble Ionic Contaminants of Blasting Abrasives
ASTM D5064-01	Standard Practice for Conducting a Patch Test to Assess Coating Compatibility

3.1.2 The Society for Protective Coatings (SSPC)

SSPC-AB1 6/1/97;7/1/07	Mineral Slag Abrasive
SSPC-PA2 5/1/04	Measurement of Dry Paint Thickness with Magnetic Gages
SSPC-SP1 11/1/82;11/1/04	Solvent Cleaning

SSPC-SP10 11/1/04 Near White Metal Blast Cleaning
SSPC-SP11 11/1/87; 11/1/04 Power Tool Cleaning to Bare Metal
SSPC-VIS 1 6/1/02; 11/1/04 Guide and Reference Photographs for Steel Surfaces Prepared by Dry Abrasive Blast Cleaning

3.1.3 Occupational Safety and Health Administration (OSHA)

OSHA 29 CFR 1910 Occupational Safety and Health Standards

4 Submittals

4.1 SELLER shall prepare detailed written procedures for material receiving, marking, storage, handling, surface preparation, environmental control, application, curing, inspection, testing, touch-up/repair, application personnel qualification, inspector qualification, (G321- E , category 28.0) and proposed documentation forms as described within this specification. The final procedure and documentation forms shall be submitted and reviewed with BUYER's permission to proceed prior to the start of coating Work. (G321-E category 15.0). Submittal requirements for manufacturers standard coating are found in Section 6.2. [Section 4.1, 24590-WTP-3PS-AFPS-T0001, rev 4]

4.2 The SELLER shall identify the specific products by manufacturer and catalog number and shall submit the coating manufacturer's latest published product data sheet, application instructions and Material Safety Data Sheets (MSDS). Conflicts, if any, between the SELLER's normal procedures, the coating manufacturer's recommendations, and this specification shall be brought to the attention of the BUYER for resolution and written permission to proceed. (G321-E category 11.0) [Section 4.4, 24590-WTP-3PS-AFPS-T0001, rev 4]

4.3 The SELLER shall submit original or copies of original Coating Manufacturer's Product Identity Certification Records for each and every batch of coating material used on the WTP project (Appendix B)(Refer to G321V category 13.0) [Section 4.5, 24590-WTP-3PS-AFPS-T0001, rev 4]

4.4 The SELLER shall submit a daily inspection record as part of the Work procedures that includes all the elements provided in Appendix C as a minimum. An entry for Wet Bulb is not required when the accepted device used to measure humidity and dew point does not require a wet bulb. (Refer to Section 8.1.9 and 10.2) (G321V category 15.0)
[Section 4.6, 24590-WTP-3PS-AFPS-T0001, rev 4]

4.5 The SELLER shall provide a personnel training and certification plan for applicators and inspectors. (Refer to Section 2.3.10, 5.1.6, 7.1.2, and 8.1.1.1).
[Section 4.8, 24590-WTP-3PS-AFPS-T0001, rev 4]

5 Quality Plan

5.1 General

5.1.1 The SELLER shall control the quality of items and services to meet the requirements of this specification, applicable codes and standards, associated procurement documents, referenced herein. The SELLER shall prepare and maintain documentation to provide evidence of compliance with reviewed procedures and this specification. A copy of the coating inspection documentation shall be included in the shipping documentation. [Section 5.1.1]

5.1.2 The SELLER, including any lower-tier organizations engaged by him, shall be subject to surveillance inspection by the BUYER representative until completion or termination of the procurement. This surveillance inspection does not relieve the SELLER from the responsibility for conformance to the requirements of procurement documents, this specification and authorized procedures. [Section 5.1.2]

5.1.3 The BUYER representative shall be provided with a work activity schedule and shall be notified of all required inspection points prior to the scheduled date for coating activities (Refer to MR Section 5.0). [Section 5.1.4]

5.1.4 If the SELLER's proposed Work plan or procedures differ from the requirements of this specification, the SELLER shall specifically identify and explain all differences in writing and submit them to the BUYER for review and verification prior to the start of Work (e.g., Supplier Deviation Disposition Request- SDDR). [Section 5.1.5]

5.1.5 All pre-established witness and hold points shall be witnessed by the BUYER unless a written waiver has been issued. [Section 5.1.6]

5.1.6 The SELLER's coating inspectors shall have previous experience in coating inspection and shall receive documented training in the specific project coating requirements, ASTM standards and other relevant standards including the reviewed work procedures. All coating inspectors working on steel items or equipment shall be trained and qualified meeting the requirements of Section 8.1.1.1. [Section 5.1.7]

6 Materials

6.1 Coating Materials

6.1.1 Coating materials including the primer, intermediate and finish coat on a given item, shall all be from the same manufacturer. One exception to this rule is when upgrading a Manufacturer's Standard (Mfg. Std.) coating using a compatible epoxy tie-coat and suitable topcoat coating system (refer to Section 6.2). [Section 6.1.2]

6.1.2 Appendix A tables contain the specified Special Protective Coatings for the WTP project. Appendix A contains the generic coating systems and approved coating materials. [Section 6.1.3]

6.1.3 Repair materials shall be the same as those originally used. Repair materials shall be in pre-measured units, and only complete kits shall be mixed. Splitting or breaking down pre-measured units of multi-component coating materials may be considered if the SELLER prepares a procedure that requires accurate measurement of all materials and Seller's QC inspector monitoring/verification of each and every mix. This procedure must be submitted to the BUYER for review and permission to proceed. [Section 6.1.4]

6.2 Manufacturer's Standard Coating

6.2.1 Components and equipment which are normally mass-produced, inventoried, and supplied from stock generally have been coated with the Manufacturer's Standard Coating (Mfg. Std.) system. Included are small valves, pumps and rotating equipment, filters and electrical equipment such as switchgear, control panels, instrumentation, motors, transformers and electrical enclosures. Items and equipment which are specifically fabricated for the WTP project shall be coated per this specification unless the item is shown to be too delicate to properly coat per the specific requirements contained in the MR. [Section 6.2.1]

6.2.1.1 The SELLER may submit an alternate coating to the specified or Mfg. Std. System, by identifying the coating materials, surface preparation, application and inspection on Appendix D including the coating material's latest published technical data sheet and MSDS, to the BUYER for review and permission to proceed. [Section 6.2.1.1]

6.2.1.2 All Mfg. Std. Coatings must be identified on an Appendix D and submitted to the BUYER along with technical data sheets and MSDS'. A small, easily replaceable item where coating touch-up is not practical (e.g., very small, too delicate, low cost and easily replaceable) and can only be purchased with the manufacturer's standard coating, an Appendix D Manufacturer's Standard Coating Data Sheet is not required. [Section 6.2.1.2]

6.3 Machined-Surfaces Coating

6.3.1 Machined surfaces not specified to be coated with a specific coating system shall be protected with a solvent cutback asphalt temporary preservative (Daubert Chemical Tectyl 891, EF Houghton Chemical Rust Veto 342 or authorized equivalent). Temporary preservative applied to carbon steel that is overlapped onto stainless steel must meet the same chemical requirements as listed in Section 6.4. All equivalents must be identified on an Appendix D form and submitted along with the manufacturer's latest published data sheet and MSDS for review and permission to proceed by the BUYER. [Section 6.3.1]

6.4 Coating Over Stainless Steel

6.4.1 All coating materials, thinners, solvents and cleaning materials used on SS shall be shown to comply with the following requirements:[Section 6.4.1]

Leachable halogen content shall not exceed 200 ppm

The total sulfur content shall not exceed 400 ppm

The total of low melting point metals such as lead, zinc, copper, tin, antimony and mercury shall not exceed one (1) percent. Of this, mercury should not exceed 50 ppm. These low melting metals shall not be intentionally added during the manufacture of the coating.

6.4.2 Sherwin Williams Macropoxy 646 and Carboline Carboguard 890 have been tested and meet the requirements above. Only these materials are approved for direct contact with stainless steel.

6.5 Batch Information

6.5.1 Each container of coating material used by the SELLER shall be marked with the following: [Section 6.5.1]

- The manufacturer's name
- The product designation
- Batch or lot number
- Location and date of manufacture
- The shelf life expiration date

6.6 Abrasives

6.6.1 Abrasives for blast cleaning shall be clean, free of oil or contaminants, and dry. The particle size shall be capable of producing the specified surface profile. Mineral and slag abrasives shall meet the requirements of SSPC AB-1. The first batch/lot of bulk, non-packaged, abrasives shall be tested for water-soluble contaminants and the conductivity shall not exceed 500 micro siemens/cm when tested in accordance with ASTM D4940. As an alternate, a chloride ion test kit, such as the Chlor*Test "A" manufactures by Chlor Rid International Inc, or BUYER accepted equal may be used. The maximum allowable chloride level is 200ppm. [Section 6.6.1]

6.6.2 When using reclaimed steel grit/shot abrasive, the particle size shall be capable of producing the specified angular surface profile (minimum 50% steel grit in original mix and all adds shall be 100% steel grit). Reclaimed abrasives already in use and the first batch/lot of new abrasive shall be tested for water-soluble contaminants and conductivity. Conductivity shall not exceed 500 micro siemens/cm when tested in accordance with ASTM D 4940. As an alternate, a chloride ion test kit, such as the Chlor*Test "A" manufactures by Chlor Rid International Inc, or BUYER accepted equal may be used. The maximum allowable chloride level is 200ppm. [Section 6.6.2]

7 Application

7.1 General

7.1.1 It shall be the SELLER's responsibility to stop the surface preparation and coating at any time when conditions exist that might adversely affect the quality. The BUYER representative may reject any prepared or coated surfaces not in compliance with this specification. [Section 7.1.1]

7.1.2 All painters (e.g., surface preparation personnel and paint/coating material application personnel), shall be individually qualified and certified in accordance with the SELLER's written description that includes classroom training and capability demonstration using the WTP project specification, and the SELLER's procedures as reviewed by the BUYER. [Section 7.1.2]

7.1.3 Care shall be taken to avoid blasting or grinding away critical markings, which identify welders, joint numbers, or other markings, which identify the item. Where such data appears in the area to be coated, it shall be protected. SELLER's are responsible for assuring their sub-suppliers are instructed concerning these requirements. [Section 7.1.3]

7.2 Pre-Surface Preparation

7.2.1 Prior to mechanical cleaning, the surfaces to be coated shall be cleaned in accordance with SSPC SP1 to remove oil, grease, dirt, and other foreign matter that can interfere with the proper bonding of the coating. Any remaining sharp edges, weld spatter, or burrs found after the start of coating Work shall be completely removed by grinding or other means. Pneumatic tools shall not be used unless they are fitted with effective oil and water traps on the exhaust air. If the steel items or equipment was shipped or stored so that the surface could have been contaminated with soluble salts (e.g., above deck ship transport, truck transport on dirt roads close to ocean, storage), the area shall be pressure water washed (2,000-5000psi) with demineralized water to remove as much soluble salt contamination as possible prior to abrasive blasting. [Section 7.2.1]

7.3 Surface Preparation

7.3.1 Prior to the start of Work, the SELLER shall examine all surfaces to be coated to determine their acceptability for the specified coating application. If the surfaces are found to be unacceptable, the SELLER shall return the surface to an acceptable condition. Coating work shall not commence until corrective action has been taken. Commencement of coating work prior to the taking of correctable action shall preclude any subsequent claim by the SELLER. The BUYER may require corrective action at the SELLER's expense. [Section 7.3.1]

7.3.2 Prior to blast cleaning items to be coated, they shall be visibly dry with the surface temperature of at least 5°F above the dew point. When using automatic blasting equipment that recycles steel abrasive, the steel need only be visibly dry. [Section 7.3.2]

7.3.3 All surfaces to be coated shall be pre-cleaned per SSPC SP 1 where oil, grease, and other contaminants are present. [Section 7.3.3]

7.3.4 Abrasives shall meet the requirements of Section 6.6. [Section 7.3.4]

7.3.5 Surfaces to be coated shall be blast cleaned in accordance with the surface preparation requirements specified in SSPC SP10. Where abrasive blasting will damage the items or is impractical, SSPC-SP11 Power Tool Cleaning to bare Metal may be substituted only in limited areas and only with BUYER's permission to proceed (e.g. SDDR). [Section 7.3.5]

7.3.6 Abrasive blasting carbon steel shall result in an angular surface profile 1.5 to 3.0 mils deep as measured using a profile comparator or Testex Press-O-Film replication tape, in accordance with ASTM D4417 method A or C. [Section 7.3.6]

7.3.6.1 Methods established for measuring surface profile produced by abrasive blast cleaning are not valid or conclusive on surfaces that are excessively rough prior to blast cleaning (e.g. rough mill finishes, heavy rusting or pitting [SSPC-VIS 1 Condition D or rougher], cast surfaces, weld beads or physically damaged surfaces). Therefore, to accurately determine the surface profile produced by blast cleaning, profile measurements shall be taken in areas

exhibiting the least surface roughness. For example, SSPC-VIS 1 pre-blast Conditions A, B or C typically result in a blasted surface that is acceptable for surface profile measurement. [Section 7.3.6.1]

7.3.6.2 If excessive surface roughness covers the entire item, then a smooth, clean ASTM A36 steel plate (e.g., SSPC-VIS 1 Condition A, B or C), approximately 6" square and at least $^1/_4$" thick, shall be blasted using the identical abrasive, pressure, nozzle, blasting equipment and method used on the actual item. The surface profile measured on the smooth plate is regarded as an accurate measurement of the profile produced by that blasting method, and shall be recorded as the surface profile for the actual item. A new plate shall be blasted and measured at a frequency accepted in the SELLER'S procedures (refer to Section 8.1.9). [Section 7.3.6.2]

7.3.7 Recycled abrasive blasting using a steel grit/shot mix is acceptable. The maximum amount of shot in the original mix shall be 50%. All additions of abrasive shall be steel grit. The stabilized working mix shall be maintained by frequent small additions of new grit abrasive commensurate with consumption. Infrequent large additions of grit shall be avoided. Steel grit or shot is not acceptable for use on stainless steel surfaces. [Section 7.3.7]

7.3.7.1 The working abrasive mix shall be maintained clean of contaminants by continuous effective operations of cleaning machine scalping and air wash separators. Reclaimed grit used for abrasive cleaning shall be tested for the presence of oil/grease by immersing a sample in clean tap water and checking for oil flotation. Tests shall be made at the start of blasting and at a minimum of every four (4) hours thereafter. If oil is evident, the contaminated abrasive shall be cleaned or replaced. All surfaces blasted since the last successful test shall be completely cleaned of contamination then re-blasted using clean abrasive. [Section 7.3.7.1]

7.3.8 Blast cleaning shall not be performed in the immediate area where coating or curing of coated surfaces is in progress. All surfaces and equipment, which are not to be coated, shall be suitably protected from blast cleaning. [Section 7.3.8]

7.3.9 Burrs, slivers, scabs, lamination, and weld spatter which become visible after blasting shall be removed. The tools and manner employed to remove weld defects and sharp edges shall not burnish or destroy the profile. If the profile or roughness is reduced, it shall be re-blasted to produce the profile and roughness as required. The exhaust of pneumatic grinders shall not impinge on the cleaned surface. If the surface becomes contaminated, it shall be cleaned of contamination and re- blasted. Carbon steel tools or implements specifically employed for coating surface preparation shall not be used on stainless steel surfaces. [Section 7.3.9]

7.3.10 If visible rust occurs or if the cleaned surface becomes wet or otherwise contaminated, these surfaces shall be re-cleaned to the degree specified. Cleaned surfaces remaining uncoated overnight shall be visually reinspected 100% for required cleanliness prior to coating or shall be re-cleaned to the specified cleanliness prior to applying the coating. [Section 7.3.10]

7.3.11 After surface preparation is complete and before coating, pressurized air or a vacuum shall be used to remove all dust and abrasive residue. The air shall be clean and dry as verified in accordance with Section 8.1.6 so as not to contaminate the prepared surface. [Section 7.3.11]

7.3.12 Machined surfaces shall be wiped with clean solvent before the application of coating and shall be protected from damage due to blasting and coating operations. [Section 7.3.12]

7.3.13 Machined portions of pipe flanges and other machined mating faces which will not be exposed after final fit-up shall be masked or covered and protected from surface preparation and coating activities. The remaining part of the flange face and exposed surfaces shall then be blasted and coated (bolt holes need only to be sufficiently coated for visible coverage. No dry film thickness required.). [Section 7.3.13]

7.3.14 Equipment shall have all openings plugged, masked, and/or blinded sufficiently to protect internals before abrasive blasting. After the coating operation is complete all internals shall be blown clean and/or vacuumed to remove any dust or abrasive blast media that may have entered the coated equipment. [Section 7.3.14]

7.3.15 The abrasive mixture and the compressed air shall be clean, dry and oil free. Moisture traps, in addition to oil and water extractors mounted on the compressor, shall be used in compressed air lines to remove oil and moisture from air close to the point of use. (Refer to Section 7.3.7.1 and 8.1.6)[Section 7.3.15]

7.3.16 All valves, valve actuators and motors that will be shop coated shall be blasted and coated prior to assembly. Areas of assembled items that are not coated prior to assembly and subject to damage during blasting must be carefully protected from abrasive damage or abrasive contamination. [Section 7.3.16]

7.4 Coating Application

7.4.1 The coating shall be applied in accordance with reviewed procedures (refer to Section 4.1). The coating manufacturer's recommendations for the application temperature and the curing temperature and times (between coats and after last coat) of the specified material shall become a part of this specification. Application and curing temperatures above or below the limits allowed by this specification (Refer to Section 7.4.4) shall be submitted to the BUYER for review (e.g., SDDR). [Section 7.4.1]

7.4.2 Coatings shall be applied using properly sized and type of equipment for the size & complexity of the item being coated. The equipment shall be clean with all components in good working order. [Section 7.4.2]

7.4.3 Surfaces that will become inaccessible shall be coated before assembly, tagging, fitting, or welding. Inaccessible surfaces includes lap joint flanges, nozzle necks, lap joint stub ends, lap rings, bolt holes, flanges for exchangers and vessels, and welded joints that become inaccessible after assembly. [Section 7.4.3]

7.4.4 Coatings shall be applied only when the surface to be coated is clean and dry. The substrate temperature shall be a minimum of 5°F above the dew point during coating application and until the applied coating is no longer moisture sensitive per the coating manufacturer's published data or written recommendations. The substrate and air temperature during coating application and curing shall be a minimum of 50°F (Inorganic zinc primers 40°F) and a maximum of 110°F. The relative humidity during coating application shall not exceed 85 percent. Measure humidity in accordance with ASTM E 337 (Sections 1.0-19.0) or using an alternate method reviewed and accepted by the BUYER. Deviations from the above listed minimum and maximum substrate/air temperature and humidity limits may be allowed when in accordance with the coating manufacturer's published or written recommendations and are accepted by the BUYER. The one firm limit is that the minimum substrate or air temperature

shall not be less than 35 °F regardless of the coating manufacturer's published or written recommendations. [Section 7.4.4]

7.4.5 The SELLER shall record all batch numbers for each coating component used along with other information necessary for the BUYER to relate the batch to the item for which it was applied. (Refer to Appendix C)[Section 7.4.5]

7.4.6 All coatings shall be thoroughly mixed until they are smooth and free from lumps, then strained through a screen of at least 30 mesh. Zinc filled coatings shall be continuously agitated from the time initially mixed and while being applied. Other coating materials shall be mixed in accordance with the coating manufacturer's published recommendations. All multi-component coating materials shall be in pre-measured units. Splitting or breaking down pre-measured units is not permitted. See Section 6.1.3 for requirements for mixing repair materials. [Section 7.4.6]

7.4.7 Alternating coats shall have a visible color difference to insure full coverage over previous coats. Touch-up of individual small spots < 6 sq. in, do not require a visible color difference when individually marked for repair and the mark remains in place until the repair is accepted. [Section 7.4.7]

7.4.8 Dry film thickness of each coating shall be in accordance with Appendix A/Table 1 Acceptable Coating Materials or as specified in the MR. (Refer to Section 8.3.2 & 8.3.3). [Section 7.4.8]

7.4.9 Relative to the ambient and surface temperatures the minimum and maximum drying times between coats shall be in strict accordance with the coating manufacturer's latest published technical data sheets. [Section 7.4.9]

7.4.10 Runs, sags, voids, drips, overspray, loss of adhesion, bubbling, peeling, or inadequate cure are not permitted. Where possible, defects shall be corrected as detected during application of the coating. [Section 7.4.10]

7.4.11 Spray equipment, brushes and rollers shall be cleaned using only manufacturer recommended solvents/cleaners. [Section 7.4.11]

7.5 Remedial Work

7.5.1 The completed coating on each item shall have the correct dry film thickness and shall be free of damage and visible defects. [Section 7.5.1]

7.5.2 Repair of Dry Film Thickness (DFT) deficiencies
[Section 7.5.2]

7.5.2.1 Defects such as runs, sags, overspray and embedded particles shall be corrected by sanding to remove the defect. When the defects are in the finish coat, all areas sanded must be overcoated with the finish coat. If the DFT of primer or intermediate coat is reduced to less than the specified minimum, the area shall be abraded with 80 grit sand paper or flapper wheel and an additional layer of coating shall be applied until sufficient thickness is achieved. If noticed during application, the sags or runs may be brushed out. [Section 7.5.2.1]

7.5.3 Repair of Damage
[Section 7.5.3]

7.5.3.1 All damaged and loosely adhering coating shall be removed and the surface thoroughly cleaned using 80 grit sanding disc, 80-grit flapper wheel or 3M Clean-N-Strip. Edges of the breaks shall be feathered and the resulting surfaces shall be roughened. The designated number of prime and finish coats shall be applied. [Section 7.5.3.1]

7.5.4 Loss of adhesion, delamination blisters, bubbling and fish eyes in the applied coating require the coating to be removed and reapplied in accordance with this specification. [Section 7.5.4]

8 Inspection

8.1.1 The SELLER shall have the full responsibility for the coating application quality in accordance with this specification and shall be responsible for stopping Work activities when conditions develop that could adversely affect the quality of the completed work. All Work is subject to the BUYER's inspection surveillance. [Section 8.1.1]

8.1.1.1 All coating Work inspection personnel shall be trained, qualified and certified in accordance with the SELLER's reviewed procedures. The inspectors shall meet or exceed the minimum capability requirements for a Level I coatings inspector as described in ASTM D4537 Section 6.2. The SELLER's inspector training, qualification and certification procedures and plan shall include classroom training on the WTP project specification, and the SELLER's reviewed procedures using the guidelines provided in ASTM D5498. The SELLER's inspector must demonstrate his/her capability of using the inspection equipment and performing all the required inspections. Additional coating work inspection guidance is found in ASTM D3276 and ASTM D6237 which may also be used in developing procedures for training and certifying coating work inspectors. [Section 8.1.1.1]

8.1.2 The BUYER representative shall be the final authority on the specification compliance for surface preparation and material application. Any coating, which in the BUYER representative's judgment, has not been applied in conformance with this specification, shall be rejected. [Section 8.1.2]

8.1.3 The BUYER representative shall have access to each part of the process and shall have the right and opportunity to witness any of the Quality Control Tests. [Section 8.1.3]

8.1.4 The SELLER shall furnish the necessary testing and inspection instruments, properly calibrated and maintained. If equipment is suspected of being out of calibration, it shall be re-calibrated and certificates made available for verification to the BUYER. Such equipment shall be available for use by the BUYER in conducting surveillance of the work. Calibration of testing and Inspection instruments shall be traceable to NIST or Buyer authorized alternative standards. [Section 8.1.4]

8.1.5 The SELLER shall halt the coating Work and make corrections to the procedures, as necessary to correct repetitive faults found in the Work. [Section 8.1.5]

8.1.6 Prior to using compressed air, the quality of the air downstream of the separator shall be tested in accordance with the requirements of ASTM D4285 by blowing the air onto a clean white

blotter or cloth for two (2) minutes at a distance of no more than twelve (12) inches to check for any contamination, oil, or moisture. "This test shall be performed at the start of work and every 4 hours thereafter". The test shall also be made after any interruption of the air compressor operation or as required by the BUYER. The air shall be used only if the test indicates no visible contamination, oil, or moisture. If contaminants are evident, the equipment deficiencies shall be corrected and the air stream shall be re-tested. Moisture separators shall be bled continuously. All lines shall be tested individually prior to use. Surfaces determined to have been blown down or blasted with contaminated air shall be cleaned of all contamination then re-blasted with clean air and abrasive. Coatings determined to have been applied using contaminated air shall be removed and reapplied using clean air. [Section 8.1.6]

8.1.7 Inspection points shall be established as follows:
[Section 8.1.7]

- Prior to the start of Work.
- Immediately following the surface preparation
- Immediately prior to the coating application
- Following the application of each coat
- Following the curing of the coating
- Final inspection and sign-off, in accordance with the project requirements

8.1.8 Any defects disclosed by inspection shall be re-inspected after correction.
[Section 8.1.8]

8.1.9 The SELLER shall keep the records indicated below, and submit these records to the BUYER (refer to Section 4.4 and Appendix C). The following lists the frequencies: [Section 8.1.9]

Coating/Inspection Step		Required Frequency
1.	Pre-Surface Prep	100% visual on Pre- Surface
	Surface Preparation	100% on Surface Prep/Cleanliness
	Profile	Profile first item of each type per shift and every 20 items thereafter or other frequency as BUYER accepted in SELLER's procedures.
2.	Environmental/Air Quality	At the start of each work and every 4 hours thereafter or more often during changing conditions.
3.	Recirculated Abrasive	At the start of work and every 4 hours thereafter
4.	Thickness Per SSPC PA2	On large items five (5) spot reading per 100 sq.ft. On items < 100 sq.ft. four (4) spot readings On items less than 4" (valves, fittings, components, etc) two (2) spot readings, For repair spots < 6 sq. inches and > 1 sq. inch. Two (2) spot readings For repair spots < 1 sq. inch one (1) spot reading For small chips/nicks/scratches and pinhole size repair spots need only a visual. For complex surfaces such as structural steel (steel beams) the frequency of dry film thickness readings shall be in accordance with SSPC-PA2 Appendix 3 section A3.4.1 excluding any readings on the flange toes. In accordance with figure A.3 "The Surface of a Steel Beam" the following locations are acceptable for the test readings- 1, 3, 4, 5, 7, 9, 10 and 11; and the following locations are excluded from test readings- 2, 6, 8, 12. For beams less than 20'-0" two (2) sets of 8 spot readings shall be taken. For beams 20'-0" thru 60'-0" three (3) sets of 8 spot readings shall be taken.
5.	Visual on Applied Coating.	100% of all items

8.2 Surface Preparation Inspection

8.2.1 Verify environmental conditions and compressed air quality (refer to Section 7.3.2, 8.1.6). [Section 8.2.1]

8.2.2 Verify recirculated grit is grease and oil free (refer to Section 7.3.7). [Section 8.2.2]

8.2.3 Verify surface cleanliness and profile (refer to Sections 7.3.5, 7.3.6 and 8.1.9). [Section 8.2.3]

8.2.4 Grease free chalk shall be used to mark local areas, which do not meet the specified requirements (e.g., soapstone and crayons are not acceptable). [Section 8.2.4]

8.3 Coating Application

8.3.1 Environmental conditions and compressed air quality shall be verified per Sections 7.3.2, 7.4.4, 8.1.6 and 8.1.9. [Section 8.3.1]

8.3.2 Dry coating thickness (DFT) shall be measured with a magnetic film thickness gage such as an Elektro-Physik "Mikrotest" or Positector 2000, Positector 6000 or BUYER authorized equal in accordance with SSPC PA2. The number and location of dry film thickness readings shall be in accordance with section 8.1.9.4. [Section 8.3.2]

8.3.2.1 The gage shall have an appropriate range that is suitable to measure the thickness expected and record calibration accuracy in accordance with SSPC PA 2 at the start of work, against certified coating thickness calibration standards for non-magnetic coating of steel, traceable to NIST or BUYER authorized alternative standards. The calibration standards shall be in date, and 1.5 mil to 20.0 mil range, unless otherwise specified. [Section 8.3.2.1]

8.3.3 Any surface with a measured thickness outside of the limits described in Section 7.4.8 shall be rejected. These areas shall be reworked or re-cleaned and re-coated at the SELLER's expense. The average of the required number of readings shall be within the specified dry film thickness range. Any of the required spot readings may be as low as 80% of the minimum specified or 120% of the maximum specified as long as the average of all the readings is within the specified range. An individual spot reading that conforms to this criteria conforms to the specified dry film thickness. [Section 8.3.3]

9 Storage, Handling and Shipping of Coating Materials

9.1 Coating Materials

9.1.1 Coating materials shall not be stored in direct sunlight or exposed to inclement weather (e.g. rain, snow, sleet, freezing rain, dew point condensation, see also Section 9.1.4). Materials shall remain under cover until ready to use. [Section 9.1.1]

9.1.2 Coating material shall be delivered in manufacturer's original unopened containers. Each container shall be clearly identified with the manufacturer's name, product designation, batch number, date of manufacture and shelf life expiration date. [Section 9.1.3]

9.1.3 The maximum shelf life allowed for coating materials used on the WTP project is 24 months from the date of their manufacture. Coating materials that are older than 24 months or that exceed the manufacturer's published shelf life, if less than 24months, shall not be used and shall be placed on HOLD and segregated from other coating materials. A one-time shelf life

extension of no less than three (3) months and no more than six (6) months, may be issued by the coating manufacturer. The shelf life extension shall be based on laboratory testing of retain samples taken at the time of manufacture or by testing a sample provided from the actual coating material in question. Where testing verifies an outdated coating material still complies with its original design criteria, it is acceptable for shelf life extension. Expiration date stickers, provided by the coating manufacturer, shall be affixed to each container prior to release from HOLD. The stickers shall include the product number, batch/lot number, the new expiration date and suitably marked to indicate that they came from the coating manufacturer. A new Appendix B shall be provided by the coating manufacturer that includes the test results and specifically indicates it was provided to document shelf life extension including new expiration date. Coating materials that have not been stored or handled in accordance with Sections 9.1.4 through 9.1.7, may not have their shelf life extended. [Section 9.1.4]

9.1.4 Coating material shall be protected from moisture, direct sunlight and temperatures below 40°F or above 100°F unless otherwise allowed by the coating manufacturer's latest published instructions and verified by the BUYER. [Section 9.1.5]

9.1.5 Coating material containers where the airtight seal has been broken or any of the contents are lost, shall not be used and shall be clearly marked and segregated from useable coating material. [Section 9.1.6]

9.1.6 Coating material containers shall not be opened except for immediate use. [Section 9.1.7]

9.1.7 Unused material shall be returned to storage as soon as possible at the end of each Workday. Materials left out for more than eight (8) hours in an uncontrolled storage area (areas without environmental controls that are exposed to ambient weather) shall not be used and shall be clearly marked and segregated from useable coating material. [Section 9.1.8]

9.1.8 All required coating material certifications (Appendix B forms) for each batch of material delivered to the SELLER shall be available at the time of material receipt. Materials delivered to the shop without the required documentation shall not be used and the SELLER shall tag and place discrepant materials into a hold area clearly separated from acceptable material. Once required documentation is received or otherwise corrected and found to be acceptable, the discrepant material may then be taken off hold status and used. [Section 9.1.9]

9.2 Steel Items and Equipment

9.2.1 The SELLER shall be solely responsible for the condition of the steel items and equipment from the time they are received until they have been delivered to the BUYER. [Section 9.2.1]

9.2.2 All booms, hooks, clamps, forks, supports, and skids used in handling or storing coated items shall be designed and maintained in such a manner as to prevent any damage to the items or to the coating and shall be reviewed by the BUYER's representative. Chains and wire rope in direct contact with the coated items are not acceptable. Fabric lifting and tie down straps shall be used. [Section 9.2.2]

9.2.3 The SELLER shall inspect all items upon receipt for shipping and handling damage. Any visible damage observed at this point shall be noted on the receipt inspection report. [Section 9.2.3]

9.2.4 All coated steel items and equipment shall be stored on padded supports as necessary to preclude damage to the coating. The supports shall be properly spaced and leveled. [Section 9.2.4]

9.2.5 The BUYER's representative will have authority to stop any storage or handling activity, if there is a possibility of damage to the coating. [Section 9.2.5]

9.2.6 All steel items and equipment damaged by the SELLER shall be repaired in accordance with the specification at the SELLER's expense. Only repair procedures reviewed by the BUYER shall be used. [Section 9.2.6].

10 Documentation

10.1 The SELLER shall provide a record of all materials used (related to individual batch number- refer to Appendix B). [Section 10.1, 24590-WTP-3PS-AFPS-T0001, rev 4]

10.2 The SELLER shall provide a record of all required daily inspections (Example- Appendix C) that includes pre-surface preparation, compressed air cleanliness, environmental conditions, surface preparation and roughness, location of field repairs coated, application, visual inspection, dry film thickness, holiday testing and all touch-up/repair. This record shall include the coating and thinner materials used and the ID of the items coated to provide traceability. [Section 10.2, 24590-WTP-3PS-AFPS-T0001, rev 4]

10.3 All quality documentation shall be available for review by the BUYER representative within 24 hours from the time it is generated. [Section 10.3, 24590-WTP-3PS-AFPS-T0001, rev 4]

10.4 SELLER documentation forms or the way that the actual Work will be documented shall be provided by the SELLER as part of the procedures submittal for review by the BUYER. [Section 10.4, 24590-WTP-3PS-AFPS-T0001, rev 4]

Appendix A Coating Materials/Coating Systems

TABLE 1 - PREQUALIFIED COATING PRODUCTS

Coating Number	Generic Products	Dry Film Thickness (mils)	Carboline	Sherwin Williams
P04	High Build Epoxy	4.0-6.0	Carboguard 890	Macropoxy 646

NOTES to Table 1, Appendix A:

1) All versions of the above coating materials shall comply the WTP project VOC requirements of 3.8 lbs./gal and shall also comply with more restrictive local VOC requirements where the work is being performed. In the event the listed coating materials or acceptable versions of the listed coating materials do not meet the local VOC requirements an alternate VOC compliant material may be submitted for review.

TABLE 2 – COATING SYSTEM CODES

SYSTEM CODE	H
COAT 1	P04
COAT 2	P04
COAT 3	
COAT 4	

NOTES to Table 2, Appendix A:

1) The surface preparation for all coating systems shall be SSPC SP10 Near White Blast with a surface profile of 1.5 to 3.0 mils unless otherwise noted in this specification or the material requisition. For coating repairs, surface preparation shall be in accordance with SSPC SP11.

*1a) System Code H shall be used for all carbon steel of the mounting frame/support structure. Some overlap onto the stainless steel fan housing is acceptable, but coating of stainless steel should be avoided. Finish color shall be ANSI 70 Gray.

*1b) Motor housing may be coated with System Code H or a Manufacturer's Standard epoxy coating system consisting of two coats. The vendor shall provide a completed Appendix D, product datasheets and MSDS for each component of the Manufacturer's Standard coating material (refer to Section 6.2.1) Finish color shall be ANSI 70 Gray.

Appendix B Coating Manufacturer's Product Identity Certification Record

Project Name: _____ Coating Manufacturer: _____
Project Number: _____ Purchase Order Number: _____
Project Location: _____ Contract Number: _____
Coating Applicator: _____ Generic Coating Type: _____
Product Name: _____ Product Number: _____

(For multi-component products, provide data for all components on one or more Appendix B forms).
(Provide the standard range and actual batch values for each test)

TEST RESULTS		Component A Batch No.		Component B Batch No.	
Test	**Test Method Used**	**Standard Range**	**Batch Actual**	**Standard Range**	**Batch Actual**
Weight per Gallon					
Viscosity					
Flash Point (Typical)					
% Solids by Volume (Typical)					
Cure to recoat time @ 50F, 70F, & 90F (typical)					
Batch Size					
Date of Mfg.					
Shelf Life					
Expiration Date					

COMMENTS:

I hereby certify that the coating materials described above were manufactured with the same formulation, raw materials, production methods, and quality control standards as the coating materials originally tested and/or accepted for use at the River Protection Project-Waste Treatment Plant (WTP) Project site, located in the 200 East Area of the Hanford Site in Washington State in accordance with the requirements of WTP specification 24590-WTP-3PS-AFPS-T0001, 24590-WTP-3PS-AFPS-T0003,24590-WTP-3PS-AFPS-T0004, 24590-WTP-3PS-AFPS-T0006 and 24590-WTP-3PS-PX04-T0004.

Signed: _____ Date: _____
Title: _____ Company: _____

Appendix C Surface Preparation and Coating Inspection Form

Page __ of ___

REPORT NO:_____ DATE: _____
PROJECT:_____ DAY: M T W T F S S
SUBCONTRACTOR/SELLER:_____ SHIFT: _____
EQUIPMENT/AREA:_____ INSPECTOR: _____
SUBSTRATE: STEEL/CONCRETE/OTHER-_____ COATING SPEC NO/REV:_____
ENVIRONMENTAL CONDITIONS:

WORK ACTIVITY						
TIME						
DRY BULB TEMP. °F						
WET BULB TEMP. °F						
RH %						
DEW POINT °F						
SURFACE TEMP. °F						
BLOTTER TEST						

PRE-SURFACE PREPARATION:
SP-1:_____ MASKING/PROTECTION:_____ SURFACE DEFECTS:_____

SURFACE PREPARATION:
METHOD:_____ ABRASIVE TYPE/SIZE/STORAGE:_____
CLEANLINESS SPEC:_____ ACTUAL:_____PROFILE SPEC:_____ ACTUAL:_____
EQUIPMENT:_____

COATING MATERIALS & MIXING:
PRODUCT(S)_____
BATCH NO(S)/QUANTITIES/EXPIRATION DATE:_____/_____/_____
THINNERS/THINNING RATIO:_____/_____/_____
STORAGE:_____ MIXING: _____ INDUCTION TIME:_____
MATERIAL TEMPERATURE:_____ POT LIFE EXPIRATION TIME:_____
COATING/LINING APPLICATION START TIME:_____ FINISH TIME:_____
COAT: PRIMER/PRIMER T.U./SECOND/SECOND T.U./THIRD/THIRD T.U./OTHER
METHOD:_____ WFT:_____ RECOAT TIME/TEMP:_____ CURE TIME/TEMP:_____
EQUIPMENT:_____

APPLIED COATING:
VISUAL INSPECTION (FILM IMPERFECTIONS):_____
DRY FILM THICKNESS: SPEC:_____ ACTUAL:_____ METHOD:_____
HOLIDAY TEST:_____ METHOD:_____ OTHER TESTING:_____ METHOD:_____
TOUCH-UP AND REPAIR:_____ FINAL CURE:_____

COMMENTS: (*Use reverse side or attach extra pages*)

_____/_____
INSPECTOR'S SIGNATURE/DATE

1 Scope

1.1 Project Description and Location

The River Protection Project-Waste Treatment Plant (WTP) is a complex of waste treatment facilities where the Department of Energy's (DOE) Hanford site tank waste will be put into stable glass form. The WTP Contractor will design, build, and start up the WTP pretreatment and vitrification facilities for the US Department of Energy's (DOE) Office of River Protection (ORP). The waste treatment facilities will pretreat and immobilize the mixed waste both low-activity waste, (LAW) and high-level waste, (HLW) currently stored in underground storage tanks at the Hanford Site.

The Hanford Site occupies an area of about 560 square miles and is located along the Columbia River, north of the city of Richland, Washington. The WTP Facility will be constructed at the East End of the 200 East Area of the Hanford Site. Benton, Franklin, and Grant counties surround the Hanford Site.

1.2 Equipment, Material, and Services Required

Design, furnish materials, fabricate, test, and package the High Integrity Centrifugal Blowers (hereinafter called Blowers) and accessories in accordance with this specification including:

1.2.1 Blowers, each complete with electric motors, and accessories as specified here and in referenced technical specifications and data sheets attached to the Material Requisition (MR).

1.2.2 Special tools required for installation and maintenance, including accessories for lifting the motors and blowers.

1.2.3 Each blower/motor assembly shall include all components, accessories, and instruments fully assembled, wired, and skid mounted requiring only connection to the Buyer's electrical power, control systems, and ductwork.

1.2.4 Services of an erection and/or startup supervisor, if requested by Buyer.

1.3 Work by Others

1.3.1 Material unloading and storage at jobsite

1.3.2 Installation labor

1.3.3 Foundation and anchor bolts

1.3.4 Ductwork external to the unit

1.3.5 Electric power supply

1.3.6 Wiring external to the blower motor and adjustable speed drive

1.3.7 Field Testing and Inspection

1.3.8 Integrated testing with Adjustable Speed Drive

1.4 Definitions

Quality Level	Identifies the quality requirements to be applied to WTP Project's Systems, Structures and Components (SSCs), and activities based on safety classification and SSC characteristic. Identified quality levels are Q, and CM. Applicable ASME NQA-1 requirements are shown on the Supplier Quality Assurance Program Requirement data sheet attached to the MR.
Q	A quality level that includes Safety Class (SC), Safety Significant (SS) and Air Permit (AP) affecting SSCs.
Safety Class (SC)	An SSC whose preventive or mitigating function is necessary to limit radioactive material exposure to the public.
Safety Significant (SS)	An SSC whose preventive or mitigating function is a major contributor to defense-in-depth and/or worker safety.
Seismic Category	WTP Project's seismic classifications of SSC's based on their safety function. Seismic categories utilized in this specification are Seismic Category I (SC-I) and Seismic Category III (SC-III).

1.5 Abbreviations

ABMA	American Bearing Manufacturers Association
AMCA	Air Movement and Control Association, Inc.
ANSI	American National Standards Institute
ASNT	American Society for Nondestructive Testing
ASME	American Society of Mechanical Engineers
ASTM	ASTM International
AWS	American Welding Society
dBA	A-weighted decibel (unit of sound pressure level)
HELB	High Energy Line Break
IPS	International Pipe Standard
ISO	International Standards Organization
LOCA	Loss of Cooling Accident
NEMA	National Electrical Manufacturers Association
NFPA	National Fire Protection Association
OEM	Original Equipment Manufacturer
OSHA	Occupational Safety & Health Act
QA	Quality Assurance
RPP-WTP	River Protection Project-Waste Treatment Plant
RTD	Resistance Temperature Detector
SCFM	Standard Cubic Feet per Minute
SC	Safety Class
SS	Safety Significant

SSC Structure, System, or Component

1.6 Safety/Quality Classifications

The equipment supplied under this specification is safety class (SC) or safety significant (SS) and/or waste permit affecting and provides either a passive safety function or both an active mechanical and electrical safety function. The equipment provided under this specification provides the motive force for the process off-gas treatment systems. Specific safety class, quality level, and seismic category classifications for the individual blowers described in this specification are specified in blower data sheets attached to the PO.

2 Applicable Documents

The following documents form a part of this specification to the extent specified herein. In the event of conflict between the document referenced herein and the contents of this specification, Seller shall notify Buyer and obtain approval for its disposition.

2.1 Codes

2.1.1 ASME B & PVC-1995, Section IX - Qualification Standard for Welding and Brazing

2.1.2 ASME NQA-1-2000, Quality Assurance Program Requirements for Nuclear Facility Applications

2.1.3 AWS D1.1-2000, Structural Welding Code, Steel

2.1.4 AWS D1.3-98, Structural Welding Code, Sheet Steel

2.1.5 AWS D1.6-99, Structural Welding Code, Stainless Steel

2.1.6 AWS D9.1-2000, Sheet Metal Welding Code

2.1.7 AWS D14.6-96, Welding of Rotating Elements of Equipment

2.1.8 ASME PTC-10-1997, Performance Test Codes on Compressors and Exhausters

2.1.9 UBC 1997, Uniform Building Code

2.1.10 29 CFR 1910, Occupational Safety and Health Standards

2.1.11 NFPA 70-1999, National Electrical Code

2.2 Industry Standards

2.2.1 ABMA 9-1990, Load Ratings and Fatigue Life for Ball Bearings

2.2.2 ABMA 11-1990, Load Ratings and Fatigue Life for Roller Bearings

2.2.3 AMCA 99-2404-1978, Drive Arrangement for Centrifugal Fans

2.2.4 AMCA 99-2406-1983, Designations for Rotation and Discharge of Centrifugal Fans

2.2.5 AMCA 300-2005, Reverberant Room Method of Sound Testing of Fans

2.2.6 AMCA 301-1990, Method for Calculating Fan Sound Ratings From Laboratory Test Data

2.2.7 ASNT-SNT-TC-1A-2001, ANST Recommended Practice

2.2.8 ISO 3744-1995, Acoustics - Determination of Sound Power Levels of Noise Sources Using Sound Pressure - Engineering Method in an Essentially Free Field over a Reflecting Plane

2.2.9 ISO 1940-1:2003, Mechanical Vibration- Balance Quality Requirements For Rotors In A Constant (Rigid) State- Part 1: Specification And Verification Of Balance Tolerances

2.2.10 NEMA MG 1-1998, Motors and Generator

2.2.11 NEMA WC 55, Instrumentation Cables and Thermocouple Wire - ICEA S-82-552

2.2.12 NEMA WC 57, Standard for Control Cables - ICEA S-73-532

2.3 Reference Documents/Drawings

2.3.1 24590-WTP-3PS-FB01-T0001, Engineering Specification for Structural Design Loads for Seismic Category III/IV Equipment and Tanks.

2.3.2 24590-WTP-3PS-G000-T0001, General Specification for Supplier Quality Assurance Program Requirements.

2.3.3 24590-WTP-3PS-G000-T0014, Engineering Specification for Supplier Design Analysis.

2.3.4 24590-WTP-3PS-JQ06-T0005, Engineering Specification for Environmental Qualification of Control and Electrical Systems and Components

2.3.5 24590-WTP-3PS-JQ06-T0003, Engineering Specification for Seismic Qualification of Seismic I Control and Electrical Systems and Components

2.3.6 24590-WTP-3PS-MUMI-T0002, Engineering Specification for Low Voltage Induction Motors.

2.3.7 24590-WTP-3PS-SS90-T0001, Engineering Specification for Seismic Qualifications of Seismic Category I/II Equipment and Tanks.

2.3.8 24590-WTP-3PS-JQ07-T0001, Engineering Specification for Instrumentation for Package Systems (For BNI use only)

2.3.9 24590-WTP-3PS-EKP0-T0001, Engineering Specification for Instruction for Package Systems (For BNI use only)

2.3.10 24590-WTP-LIST-CON-08-0001, Restricted Materials List.

2.3.11 24590-WTP-3PS-G000-T0019, Engineering Specification for Acquisition of Commercial Items and Services for use in Safety Applications at WTP

2.3.12 24590-WTP-3PS-G000-T0003, Engineering Specification for Packaging, Handling and Storage Requirements

3 Design Requirements

3.1 General

3.1.1 Blowers shall be multi stage as specified in the Blower Data Sheets.

3.1.2 When indicated on the Blower Data Sheets, Seller shall provide and install insulation studs at factory for support of field installed 2.5 inch thick mineral fiber insulation. Studs shall be welded to exterior of blower housing.

3.2 Basic Function

3.2.1 The blowers will provide the motive force required to transport and discharge air and gaseous effluents to atmospheres, as shown in the Blower Data Sheets.

3.2.2 Design basis performance and capacity data are as listed on the Blower Data Sheets.

3.2.3 The equipment and appurtenances will be used in a plant that has design life of 40 years. The design objective for these multi-stage blowers shall be based on a useful life expectancy of 40 years with periodic maintenance as recommended by the Seller. The supplier shall provide the Mean Time Between Failure figure with a brief description and justification.

3.3 Performance

3.3.1 Multi-stage blower performance ratings are to be based on testing in accordance with ASME PTC-10-1997. Blowers shall be capable of performing at conditions shown on the Blower Data Sheets.

3.4 Lifting and Handling Requirements

3.4.1 For lifting and handling requirements, see Specification 24590-WTP-3PS-G000-T0003.

3.4.2 Seller shall provide lifting eyes or lugs to facilitate lifting and handling of the blowers. Lifting eyes or lugs shall be certified suitable for the safe, balanced lifting and handling of the equipment.

3.4.3 Metal tags that identify the maximum design load (excluding dynamic load factor) shall be provided for all lifting lugs, bails, and other lifting points.

3.4.4 Special lifting devices required to lift the motor and blower for removal or replacement shall also be furnished.

3.5 Sound Ratings

3.5.1 Multi-stage blower sound rating shall conform to AMCA 301, and be tested in conformance to AMCA 300 or ISO 3744.

3.5.2 Sound pressure level shall not exceed 85 dBA at 3-feet. Refer to Attachment A – Noise Requirements for Fans and Blowers. If sound pressure exceeds 85 dBA at 3-feet, Seller shall obtain Buyer permission to proceed in the form of a submittal stating estimated sound power level.

3.6 Design Conditions

3.6.1 Design basis performance and capacity data are as listed on the Blower Data Sheets.

3.6.2 Gas stream properties are shown on Blower Data Sheets. Materials of construction used shall be compatible with the effluent being handled, and specified on the Blower Data Sheets

3.6.3 Seller to provide a corrosion analysis based upon gas stream properties as provided on the Blower Data Sheets and provide an estimated useful life for all components.

3.7 Environmental Conditions

3.7.1 The environmental conditions for the plant rooms in which the blowers are located are listed on the Environmental Qualification Data Sheets attached to the Blower Data Sheets .

3.7.2 Blowers and motors shall be stored in accordance to requirements in section 7.1.

3.8 Mechanical Requirements

3.8.1 General

3.8.1.1 Blower housings shall be designed for both positive pressures of greater than 125% of the design operating pressure of the blower and negative pressures as specified on the Blower Data Sheets.

3.8.1.2 Blower inlets and outlets shall include allowances for the full dead weight of any flexible connections connected to the inlet and outlet.

3.8.1.3 Shaft speed shall not exceed 3600 rpm unless approved by Buyer. Tip speed of rotating assembly shall not exceed 530 fps unless approved by Buyer.

3.8.1.4 Blower housings shall be designed to prevent any internally propelled missiles from penetrating the housing.

3.8.1.5 Blower inlet and discharge connections shall be provided with temporary protective cover. These covers will be removed prior to connection to Buyer's piping and/or ductwork.

3.8.1.6 If specified on the Blower Data Sheets. braided stainless steel 316L flexible hoses with stainless steel 316L flanges shall be provided to mate with the blowers' inlet and outlet flanges. Stainless steel connectors shall have flexible core of annular corrugated stainless steel 316L tubing. Braid for the connectors shall be stainless steel 304. End fittings shall be 150# raised face stainless steel 316L flanges conforming to ANSI dimensions. Connectors shall be shipped loose for field installation.

3.8.1.7 Blower drive arrangement shall be as shown on Blower Data Sheet. Drive arrangement designations shall be per AMCA 99-2404. Designations for rotation and discharge shall be per AMCA 99-2406.

3.8.2 Access Doors and Inspection Ports

3.8.2.1 Multi-stage blowers may be provided with four - 1 inch NPT plugged inspection ports per impeller in lieu of an access door. The -inspection ports shall be located at 90 degree increments around the circumference of the housing. The bottom inspection port shall be utilized as a drain port and shall be supplied with square headed screwed drain plug.

3.8.3 Balance and Vibration Standards

3.8.3.1 Soft foot is the condition where the bottoms of the equipment "feet" or "base" are not machined flat in the same plane or parallel with their mating (or mounting) surface creating a situation where all the "feet" or "base" are not equally supporting the weight of the equipment. Each foot must be checked for soft foot. Any vertical or angular soft foot that exceeds 0.003 inches is excessive and must be corrected.

3.8.3.2 Multi-stage blowers shall be balanced to Quality Grade 2.5 of ISO 1940-1:2003. Mechanical Vibration-Balance Quality Requirements For Rotors In A Constant (Rigid) State- Part 1: Specification And Verification Of Balance Tolerances with results documented and submitted to Buyer. Additionally, multi-stage blowers shall be required to meet 1 mil displacement at 3600 rpm, filtered-in.

3.8.3.3 Multistage blower impellers shall be individually balanced and shall be individually replaceable.

3.8.4 Bearings

3.8.4.1 Multi-stage blowers shall be supplied with radial type grease-lubricated radial roller bearings with L-10 service life of not less than 100,000 hours, unless noted otherwise on the data sheets.

3.8.4.2 Multi-stage blower shall incorporate a grease slinger mounted inboard of the bearing to ensure a constant flow of lubricant to the bearing.

3.8.4.3 Seller shall provide a "heat slinger" device attached to the blower shaft external to the housing to help in dissipation of heat for bearing protection, as required. The "heat slinger" shall be equipped with safety guards.

3.8.4.4 For all blowers, it shall be possible to replace the bearings without disconnecting any piping or disassembling of the blower housing.

3.8.4.5 Seals to prevent loss of lubricant and admission of contaminants shall be provided.

3.8.4.6 Extended lube lines and fittings as required to permit lubrication during operation shall be provided.

3.8.4.7 Bearing lubricants shall be suitable for use in radiation levels as specified on the Environmental Qualification data sheet attached to the Equipment data sheet.

3.8.5 Shafts

3.8.5.1 No contact shall be made between the shaft rotor and the housings, other than through the bearings.

3.8.5.2 Shafts shall be of the material specified on the Blower Data Sheet and shall be turned, ground and polished, with machined keyways for attaching impeller and drive coupling.

3.8.5.3 Impeller(s) are to be secured to the blower shaft by locknuts or set screws.

3.8.5.4 The blower impeller and shaft shall be rated for 110% of the design rpm listed on the Blower Data Sheets.

3.8.6 Shaft Seals

3.8.6.1 Blowers shall be furnished with shaft seals as specified on the Blower Data Sheet.

3.8.6.2 Shaft seals shall be fully capable of withstanding the required test pressures before, during, and after blower operation.

3.8.6.3 As noted on the Blower Data Sheet, no process offgas out leakage at the shaft seals is allowed in systems handling potentially toxic emissions. Use of double mechanical seals and purge gas to assure zero process offgas out leakage is acceptable where needed due to positive internal system pressure.

3.8.7 Safety guards

3.8.7.1 Blowers shall be provided with bolted drive guards that cover the shaft and bearings. Provisions shall be made for insertion of tachometer and access to lube fittings without removal of drive guards.

3.8.7.2 Safety guards shall be expanded metal with an angle framework or shall be formed plate types.

3.8.7.3 The guards shall comply with the requirements of OSHA 29 CFR 1910 Subpart O - Machinery and Machine Guarding.

3.8.8 Drive requirements

The drive types shall be as indicated in the blower data sheets attached to the Material Requisition.

3.8.9 Loadings

3.8.9.1 Blower assemblies shall be self-supporting, capable of carrying the static loads of the blower components and the stress imposed during shipment, installation, and operation.

3.8.9.2 Seismic qualification of the blowers shall be in accordance with the methods and procedures described in Specification 24590-WTP-3PS-SS90-T0001, "Seismic Qualification of Seismic Category I/II Equipment and Tanks", or 24590-WTP-3PS-FB01-T0001, "Structural Design Loads for Seismic Category III/IV Equipment and Tanks".

3.8.9.3 Any additional structural loading will be indicated on the Blower Data Sheets. In-Structure Response Spectra (ISRS) curves for Seismic Category I/II equipment or items are attached to the blower data sheets.

3.8.9.4 Seller shall submit to the Buyer seismic compliance documentation for permission to proceed.

3.9 Electrical Requirements

3.9.1 Acceptance of Electrical Equipment

- All electrical equipment for facility and equipment wiring, as defined by the National Electrical Code NFPA 70-1999, shall be Approved. Approval will be in accordance with Article 90-4, "Enforcements", Article 90-7, "Examination of Equipment for Safety," and Article 110-3, "Examination, Identification, Installation, and Use of Equipment."
- Approved means "Acceptable to the Authority Having Jurisdiction" (AHJ), as defined in Article 100 of NFPA 70-1999. Only the WTP Electrical AHJ can provide the approval.
- "Equipment" is defined by the NFPA 70 as, "A general term including material, fittings, devices, appliances, fixtures, apparatus, and the like used as a part of, or in connection with an electrical installation". As used here, the entire mechanical assembly is not considered an electrical installation, only the electrical and/or electronic components, and the interconnecting wiring.
- Listing and labeling by an OSHA Recognized NRTL is the primary means (Method 1 below) of obtaining WTP AHJ approval for electrical equipment, devices and materials.
- All Control Panels shall be UL labeled by a certified UL 508A shop.
- Electrical Equipment that is installed on (standard or custom fabricated) Mechanical Equipment shall comply with the requirements stated above.
- Electrical Equipment, that is part of a Mechanical Packaged Equipment assembly, being field-evaluated and Labeled at the factory by a NRTL is an alternate method of obtaining WTP AHJ approval.

3.9.1.1 Method 1 (Primary): Listed, Labeled of Certified (i.e. UL508A).

3.9.1.1.1 The WTP AHJ shall approve and accept electrical equipment without additional examination if it is Listed, Labeled, or Certified by a US NRTL, as recognized by OSHA under 29 CFR 1910-Subpart S and is acceptable for the application, environment and other requirements of NEC Article 110. For a listing of and Typical Registered Certification Marks of US NRTL's recognized by OSHA go to http://www.osha.gov/dts/otpca/nrtl/nrtlmrk.html.

3.9.1.2 Method 2 (Alternate): Field Evaluation by a NRTL

3.9.1.2.1 Electrical equipment that is part of an overall electrical or mechanical assembly having a NRTL safety evaluation or a field evaluation, which states the equipment has been accepted or otherwise deemed safe by the NRTL recognized by OSHA under 29 CFR 1910-Subpart S, using US standards, will be evaluated by the WTP AHJ for acceptability. If found acceptable no further examination of the equipment is required.

3.9.1.2.2 The supplier shall submit all field evaluation reports completed by an OSHA recognized NRTL to the Buyer for review and approval by the AHJ. These field evaluation reports shall show compliance to the applicable USA Electrical Standard(s) recognized by OSHA that are listed on the OSHA website http://www.osha.gov/dts/otpca/nrtl/allstds.html. The NRTL Label will be as shown on the OSHA website with whatever additional markings that are necessary to indicate acceptability for use in the USA http://www.osha.gov/dts/otpca/nrtl/nrtlmrk.html.

3.9.1.2.3 The supplier shall submit a Certificate of Compliance (C of C) document for review and approval by the AHJ that lists the USA Electrical Standard(s) that each electrical material or equipment is evaluated to for it's NRTL Listing. Only those standards that are listed on the OSHA website

http://www.osha.gov/dts/otpca/nrtl/allstds.html are acceptable to the AHJ. The certification shall confirm that the NRTL Label for each electrical component will be as shown on the OSHA website including the additional markings required to indicate acceptability for use in the USA http://www.osha.gov/dts/otpca/nrtl/nrtlmrk.html.

3.9.1.3 If a supplier is unable to meet the criteria in Method 1 or Method 2, the supplier shall request in writing a variance by the WTP Electrical AHJ.

3.9.2 Circuits of different voltages (service level) shall be terminated on physically separate terminal strips and clearly labeled to show the circuit voltage. Terminal blocks shall be segregated according to signal type. In the event safety instrument system components are included in an enclosure, the wiring shall be clearly identified and segregated from non-safety instrument system circuits. [Section 5.5.3.3, *Electrical*, 24590-WTP-3PS-EKP0-T0001]

3.9.3 AC power shall be routed through separate wireways or separated with a divider from 24 VDC discrete and analog instrument signals within enclosures. Power and signal cabling shall not be run in parallel, except in separate wireways, and should cross at a 90-degree angle only. [Section 5.5.3.4, Electrical, 24590-WTP-3PS-EKP0-T0001]

3.9.4 Wires shall be tagged with the Supplier's cable designation number at both ends with (heat shrinkable or non-shrinkable) plastic sleeve type wire markers. [Section 5.5.3.6, Electrical, 24590-WTP-3PS-EKP0-T0001]

3.9.5 Instrumentation cables shall be terminated in separate junction boxes from the power and control cables. [Section 5.5.4.1, Electrical, 24590-WTP-3PS-EKP0-T0001]

3.9.6 Where cables supplied and installed by Buyer are run to the package unit, the Supplier shall provide space for installing and terminating the cables. [Section 5.5.4.2, Electrical, 24590-WTP-3PS-EKP0-T0001]

3.9.7 Wiring shall be installed in metal conduit. Minimum conduit size shall be ¾ inch. ½ inch conduit is allowed when connecting to devices with ½ inch hubs. [Section 5.6.1.1, Electrical, 24590-WTP-3PS-EKP0-T0001]

3.9.8 Liquid-tight flexible metallic conduit shall preferably be used to isolate the transmission of vibration to the conduit system, and for connection to equipment which may be periodically removed. [Section 5.6.1.2, Electrical, 24590-WTP-3PS-EKP0-T0001]

3.9.9 Where conduit is exposed to potential water spray (outdoor or indoor), it shall be sloped for drainage. A stainless steel breather shall be installed at the high point of the conduit system, and a stainless steel drain shall be installed at the low point of vertical conduit runs complying with UL and NFPA standards. [Section 5.6.1.4, Electrical, 24590-WTP-3PS-EKP0-T0001]

3.9.10 Conduit connections to junction boxes shall be made using watertight threaded hubs or factory threaded hubs. [Section 5.6.1.5, Electrical, 24590-WTP-3PS-EKP0-T0001]

3.9.11 Non-current carrying metallic parts of electrical equipment shall be bonded together and made electrically continuous. Two grounding pads shall be furnished at diagonally opposite corners at the edge of skids for connection by the Buyer to the area ground grid. [Section 5.7.1, Electrical, 24590-WTP-3PS-EKP0-T0001]

3.9.12 Electrical equipment on the packaged unit shall be bonded to the package unit skid. [Section 5.7.2, Electrical, 24590-WTP-3PS-EKP0-T0001]

3.9.13 Junction boxes and control cabinets shall be provided with grounding means. [Section 5.7.4, Electrical, 24590-WTP-3PS-EKP0-T0001]

3.9.14 Permanent nameplates or labels shall be provided to identify each meter, relay, control switch, indicating light, circuit breaker compartment, and to identify all devices and terminal blocks within the compartments. [Section 5.10.1, Electrical, 24590-WTP-3PS-EKP0-T0001]

3.9.15 Exterior nameplates shall be made of laminated, beveled plastic of manufacturer's standard, with black lettering or numbering on a white background and shall be permanently affixed on the exterior. The method of affixing shall not violate the NEMA rating of the enclosure. [Section 5.10.2, Electrical, 24590-WTP-3PS-EKP0-T0001]

3.9.16 Interior labels for all devices, parts and components shall be machine printed, permanent and self-adhesive labels. [Section 5.10.3, Electrical, 24590-WTP-3PS-EKP0-T0001]

3.10 Low Voltage Induction Motors

3.10.1.1 Motor drive combination shall be suitable for operation for the design conditions shown on the Blower Data Sheets.

3.10.1.2 Induction motors shall be in accordance with Specification 24590-WTP-3PS-MUMI-T0002, Low Voltage Induction Motors, and as indicated on the motor data sheets appended to the Blower Data Sheets except:

- Motors may have cast iron rotor cages.
- Motors space heater are required for the purpose of long term storage. The motor space heaters do not have to be removable. See specification 24590-WTP-3PS-MUMI-T0002, Section 3.4 for heater requirements.

3.10.1.3 Drive motors and driven equipment shall be specifically designed and constructed for use with adjustable speed drives in conformance with NEMA MG-1 Part 31 criteria. Manufacturer shall provide certification to the Buyer that the motor is compatible with an adjustable speed drive and will perform within the specified duty range without incident.

3.10.1.4 Transient voltage variations due to short circuits, disturbances from outside supplies, and their effect on plant operation cannot be avoided. The following criteria shall apply in such cases: momentary voltage depression down to 80% of rated equipment voltage shall not affect equipment

3.10.1.5 Motor shall have a rated horsepower of minimum of 115% of the design brake horsepower (bhp). The motor shall also have a service factor of 1.15 at rated horsepower.

3.11 Instrumentation and Control Requirements

[Source: 24590-WTP-3PS-JQ07-T0001, Rev 2] See datasheet for applicable instrumentation and control components for each blower.

3.11.1 General requirements:

3.11.1.1 Instrument circuits shall be protected and housed to meet the electrical area classification in which it is installed. The choices of housing shall satisfy all pertaining codes. [Section 3.3.4, *Instrumentation*, 24590-WTP-3PS-JQ07-T0001]

3.11.1.2 Intrinsically safe instrument systems should not be used, unless there are special site requirements, and then only with the Buyer's approval. Intrinsically safe system requires certification by Underwriters Laboratory (UL) or Factory Mutual (FM) Insurance Company. [Section 3.3.4. *Instrumentation*, 24590-WTP-3PS-JQ07-T0001]

3.11.1.3 This specification includes a list of recommended suppliers of instruments. Bidder's proposal shall include cost associated with the use of Buyer designated instruments. [Appended Section 3.4.1, 24590-WTP-3PN-JQ07-00012]

Table 1. Instrument Supplier List

Description	Supplier	Comments
Temperature Sensor(RTD)	Daily Thermetrics	
	IST Conax Nuclear	ITS OK for Rad service
	Emerson (Rosemount)	
	Temp-Pro Inc.	
	Thermoelectric	OK for Rad service
	United Electric	
Speed Sensor	Air-Pax	
	Electro-Sensors	

3.11.1.4 Temperature measurement devices shall be selected that are optimized for the application and environment of the measurement services. This includes installation constraints, ambient conditions, and process conditions of the measurement devices. The following describes the Buyer's requirements for specific types of temperature measuring elements and systems. [Section 3.4.5.2]

- All temperature elements, Thermocouples (T/Cs) or Resistance Temperature Devices (RTDs), shall be installed in thermowells to permit removal without process disturbance except where there is no risk to personnel from the process fluid during removal of the measuring element, i.e. shell skin, motor bearings and motor windings. Where a thermowell is not used, a permanent label shall be affixed to the primary element, indicating that there is no thermowell.

- Instrument ranges shall be selected such that the normal operating point is between 35% and 75% of the range of the instrument. Except where the Buyer has specifically

identified manufacturer and model, all the instruments shall be selected by the Supplier in accordance with guidelines provided herein. The instruments described below shall be selected to meet the required safety classification, specified quality, and the design criteria stated herein and in the primary equipment specification. The systems designed and fabricated shall meet the specified reliability and availability for each system or component.

- Sheathed RTDs with transmitters shall be used for remote temperature indication.
- RTD elements shall be Platinum with a nominal resistance of 100 Ohm at 0 °C (32 °F). The resistance-vs.-temperature characteristic curve shall conform to DIN 43760, IEC 60751 with a temperature coefficient of 0.00385 ohms/ohm/°C. Three wire element design shall be used.
- RTDs shall be sheathed with Magnesium Oxide insulation. The sheath shall be 316SS and ¼" diameter as a minimum. All T/Cs or RTDs shall be duplex design, spring loaded, and supplied with a connection head with internal grounding screw and external ground terminal. All elements shall be connected in the connection head.
- Temperature measurements using RTDs shall use remote mounted transmitters with the appropriate input/output voltage isolation and located in the field or panel to connect an isolated signal to the Buyer's or Supplier's control system. [Section 3.4.5.2.1]

3.11.1.5 The Supplier shall provide and install non-contacting vibration and position sensor probes for machine monitoring of radial vibration. The installation of all bearing thermocouple and shaft position monitoring equipment shall be in accordance with API 670. Bearing thermocouples shall be type E calibration. [Section 3.4.5.16.1, *Instrumentation*, 24590-WTP-3PS-JQ07-T0001]

3.11.1.6 If required on Blower Data Sheet, speed transmitters shall have sensors of non-contact type. [Section 3.4.5.16.2, *Instrumentation*, 24590-WTP-3PS-JQ07-T0001]

3.11.1.7 All enclosures, cabinets, panels, and racks shall be designed and fabricated to be in full compliance with NFPA 70-1999. [Partial Section 3.6]

3.11.1.8 Access to enclosure internal components or equipment shall not require the use of hand tools. Access to any component within the enclosure for maintenance or replacement shall not be prevented by proximity to other components within the enclosure. Equipment mounted in the rear of the enclosure shall be on a back-panel and positioned to facilitate removal and replacement. Enclosure back-panels shall be fabricated from low-carbon steel and shall be finished with semi-gloss or gloss white paint. Enclosures shall be sized to allow clearance between the enclosed components, cables, print pockets, and components mounted on the door. [Section 3.6.3, *Instrumentation*, 24590-WTP-3PS-JQ07-T0001]

3.11.1.9 The enclosure grounding system shall be installed in conformance to IEEE Guide 1050-1996, section 5.3.1 "Single point grounding system". All instrumentation enclosures shall have an equipment safety ground bus and an isolated signal ground bus, except instrument junction box. Instrument junction box shall only have an equipment safety ground. The grounding bus shall be constructed with solid copper, and all connections shall be drilled and tapped. The ground bus shall be drilled and tapped for an additional 20 percent spare terminations. [Section 3.6.5, Instrumentation, 24590-WTP-3PS-JQ07-T0001]

3.11.1.10 All removable metal components, instruments, or electrical devices shall be connected via individual conductors to the equipment safety ground bus. Components shall not be grounded to each other via a common wire connecting the components to the equipment safety ground bus. Enclosure door and back-panel shall be connected to the equipment safety ground bus via individual conductors. Ground conductors connected to the equipment safety ground bus shall have an insulation color code of green. [Section 3.6.5, Instrumentation, 24590-WTP-3PS-JQ07-T0001]

3.11.1.11 The Supplier shall mount, connect and wire each instrument or control device such that adjustment, maintenance, removal and replacement may be accomplished in a safe manner without interruption of service to adjacent but unrelated equipment and without placing undue stress on installed wiring or devices. Accommodations for strain relief shall be made when routing wire to hinged enclosure doors and shall be wrapped with spiral wire wrap. [Section 3.6.6, *Instrumentation*, 24590-WTP-3PS-JQ07-T0001]

No more than two wires shall be connected to one terminal point and only if the terminal is rated for the two wires. Wire splicing shall not be used unless approved by the Buyer. Bridge or comb jumpers are preferred to wire jumpers on terminal strips. Jumpers shall not be installed on the field side of the terminal strip. [Section 3.6.6, *Instrumentation*, 24590-WTP-3PS-JQ07-T0001]

3.11.1.12 Terminal blocks shall be selected to accommodate the function and electrical requirements associated with each wiring application. They shall incorporate the following features:

1. Space saving design
2. Screw clamp wire connection
3. Single level configuration
4. Integral test facilities
5. DIN-rail (35mm) mounted [Section 3.6.6, *Instrumentation*, 24590-WTP-3PS-JQ07-T0001]

3.11.1.13 Isolating type terminal blocks shall be Weidmuller "W" series, Allen Bradley 1492-WKD3TP, Phoenix Contact, or Buyer approved equal. Non-isolating feed-thru terminal blocks shall be Weidmuller "W" series, Allen Bradley 1492-W4, Phoenix Contact, or Buyer approved equal. All terminal blocks shall be identified by a unique terminal block number and approved by the Buyer. [Section 3.6.6, *Instrumentation*, 24590-WTP-3PS-JQ07-T0001]

3.11.1.14 For all enclosures, each incoming power supply shall have a manually actuated electrical power disconnect device mounted on/in the enclosure in an easily accessible location. The electrical power disconnect device may be a single device or multiple devices for individual circuits. Each device that uses 120 VAC for power shall have individual connections protected via rail mounted circuit breakers. The circuit breakers used for individual control or power circuit protection in the enclosure shall be thermal magnetic breakers such as Weidmuller CB, Allen Bradley type 1492-GH, Phoenix Contact, or Buyer approved equal. They shall be Dual-In-Line, DIN-rail mountable TS35, TS32, or equivalent. Power shall not be "daisy chained" from instrument to instrument; however, the bridge or comb jumpers may be used on the supply side of the circuit breakers. A fuse and circuit breaker directory shall be contained in a holder permanently affixed on the inside of each door or back-panel and protected by a clear window. [Section 3.6.6, *Instrumentation*, 24590-WTP-3PS-JQ07-T0001]

3.11.1.15 All instrument signal cables shall be of the type and specification as listed in section 4.2.4-Instrumentation Cable Schedule. Power cable, wire size and type shall be in accordance with NFPA 70 - 1999. [Section 3.6.6, *Instrumentation*, 24590-WTP-3PS-JQ07-T0001]

3.11.1.16 All wires and cables external to an enclosure shall be of the instrument tray cable (ITC) type, flame-retardant (passes IEEE 1202 vertical flame test), and have a 90 °C continuous rating in wet or dry locations. All cable insulation and jacket material shall be resistant to heat, moisture, impact, ozone, and meet or exceed the following requirements:

- 300 V rated for low voltage instrument cables (up to 120 VAC and 125 VDC)
- 600 V rated for power/motor control cables (up to 480 VAC and 250 VDC) [Section 3.6.6, *Instrumentation*, 24590-WTP-3PS-JQ07-T0001]

The wire insulation color for power wiring shall be of the following:

- Black -Ungrounded conductors more than 50 VAC
- White-Grounded conductors more than 50 VAC
- Green-Equipment grounding wire
- Green-Yellow tracer-Isolated instrument grounding wire
- Light Blue-Ungrounded supply voltage less than 50 V (DC or AC)
- Violet-Switched ungrounded voltage less than 50 V (DC or AC)
- White/Blue tracer -Grounded or return supply voltage less than 50 V (DC or AC)

[Section 3.6.6, *Instrumentation*, 24590-WTP-3PS-JQ07-T0001]

3.11.1.17 The enclosures shall be designed so that tools and test equipment may be used to accomplish all necessary adjustments, maintenance, cleaning, testing, and calibration. If specialized tools are needed for adjustments, maintenance, cleaning, testing, and calibration the Supplier shall provide two sets per order. Test points and calibration areas shall be accessible, clearly identified, and labeled. Adequate space shall be provided for removal and replacement of individual instruments or components located inside the enclosure. Equipment mounted in the rear of the enclosure shall be positioned to facilitate removal and replacement from the front of the enclosure. [Section 3.6.7, *Instrumentation*, 24590-WTP-3PS-JQ07-T0001]

3.11.1.18 The Supplier shall provide and install a suitable arc suppression device or kickback diode across switched loads unless the switching component includes inherent arc suppression. Kickback diodes shall be supplied and installed on all inductive DC loads. [Section 3.7.5, *Instrumentation*, 24590-WTP-3PS-JQ07-T0001]

3.11.1.19 All Supplier provided wiring shall be identified at each end with a numbering system that is cross-referenced on all appropriate drawings. The wire-numbering scheme shall be proposed by the Supplier with Buyer's concurrence. Ferrules or wire markers shall be indelibly and clearly marked in black on white plastic, heat shrinkable sleeves. Open markers or "C" type sleeves that can be applied after a conductor is terminated will not be accepted. Junction box (JB) terminals shall have adequate space between them and the JB internal walls so connected cables and individual wire numbers can be easily read without disturbing the wiring within the JBs. [Section 3.7.8, *Instrumentation*, 24590-WTP-3PS-JQ07-T0001]

3.11.1.20 All cables provided by the Supplier shall be clearly identified with a heat shrink type label. [Section 3.7.8, *Instrumentation*, 24590-WTP-3PS-JQ07-T0001]

3.11.1.21 Instrument mounting locations shall be selected with consideration of both function operation and accessibility requirements for maintenance. Instrumentation should not be mounted on vibrating equipment or light duty support. Instruments shall not be mounted on handrails or safety railings. Instrument mounting bolting and hardware shall be 316 SS. Mounting brackets and stands for ITS instrumentation shall be qualified to the seismic requirements specified by the primary equipment specification. [Section 3.8.8, *Instrumentation*, 24590-WTP-3PS-JQ07-T0001]

3.11.1.22 Each instrument shall be installed so as to allow adequate safe access for both operation and maintenance. [Section 3.8.8.2, *Instrumentation*, 24590-WTP-3PS-JQ07-T0001]

3.11.1.23 Blowers shall be provided with a blower shaft speed sensor which shall include an "Air Pax/ Al-Tek" brand or Buyer approved equivalent shaft sensor, and any connecting cables or signal conditioners required to provide a 4-20mA signal output. Where required on the Blower Data Sheets, additional SMAR 1/F 302 Foundation Fieldbus converters shall be provided.

3.11.1.24 Blowers shall be provided with a "Daily Thermetrics" brand or Buyer approved equivalent three wire, dual element, 100 ohm platinum RTD to measure the temperature of each blower bearing. Temperature coefficient shall be 0.00385 ohms/ohm/°C. Generally all RTDs shall be duplex design, spring loaded, and supplied with a connection head with internal grounding screw and external ground terminal. All elements shall be connected in the connection head. Applications where a connection head is not feasible; general purpose RTD probes will be allowed.

3.11.1.25 Blowers shall come equipped with Bently Nevada transducers or Buyer approved equivalent to measure the vibration of the blower bearings. The instruments shall transmit a 4-20 mA signal proportional to the vibration.

3.11.1.26 Both temperature, speed, and vibration sensor wires shall be connected to terminal blocks provided by the Seller. Terminal blocks shall be installed in a separate electrical termination box for external connection to Buyer's cable(s). Seller shall provide sufficient terminals to allow landing and continuation of conductor shields.

3.11.1.27 The Buyer will provide power for the Suppliers' instruments. Each source will be delivered at 120 VAC, 1 phase, 60 Hz, grounded system. All other voltages required by Supplier shall be derived from the Buyer supplied 120 VAC, 1 phase, 60 Hz, grounded system. Inter-connecting wiring or cabling for packaged units furnished by Supplier, shall be terminated and tested according to this specification.

3.11.1.28 All internal enclosure wiring shall be neatly dressed in slotted PVC wire-ways. The wire-way shall be securely fastened to the enclosure back-panel. Supplier shall provide PVC wire-ways on the opposite side of field terminations to be used by the Buyer. Adequate space shall be provided around terminal blocks to allow the Buyer to train and terminate cables. The field side wire-way shall be designed for multi-core field cables with conductor size of #14 AWG.

3.12 Accessibility and Maintenance

3.12.1.1 Seller's recommended accessibility and recommended spares for each piece of equipment shall be included in the Seller's submittal.

3.12.1.2 Seller shall provide the inspection and maintenance requirements with the recommended intervals to be performed by Buyer.

3.13 Accessories

3.13.1 Unitary Inertia Bases

When indicated on the Blower Data Sheets, blowers shall be provided with a unitary inertia base.

3.13.2 Vibration Isolators

3.13.2.1 When installation is specified on the Blower Data Sheet, the vibration isolators shall be Supplier specified and supplied. Supplier shall specify the isolator manufacturer and model number, spring minimum diameter, spring deflection, and spring restraint features on the Blower Data Sheet.

3.13.2.2 Submittal drawings shall show locations for vibration isolator placement on blower assemblies when installation is specified on the data sheet.

3.13.2.3 Each vibration isolator shall deflect equally under the conditions of dynamic loading.

3.13.2.4 Spring mounts shall be selected to provide 2 in. minimum deflection at design loading, and shall allow for 50 % additional travel to solid. Spring mounts shall incorporate seismic restraint capability for a seismic occurrence as defined in Specifications 24590-WTP-3PS-SS90-T0001, Seismic Qualification of Seismic Category I/II Equipment and Tanks or 24590-WTP-3PS-FB01-T0001, Structural Design Loads for Seismic Category III & IV Equipment and Tanks. Spring mounts shall include enlarged base plates for seismic anchoring.

3.13.3 Flexible Connectors

3.13.3.1 When specified on the data sheet, Supplier shall provide flexible connectors. Supplier shall specify the connector manufacturer and model number on the blower data sheet.

3.13.3.2 When specified on the data sheet, submittal drawings shall show locations for or placement of flexible connectors on blower assemblies

4 Materials

4.1 Construction

4.1.1 Materials of construction shall conform to the Blower Data Sheets as applicable.

4.1.2 Material test reports of chemical and physical properties shall be provided for all stress or pressure retaining components of the blowers, including the blower impeller and its components, blower shaft, and housings.

4.1.3 The ASME and/or ASTM material numbers and grades shall be identified and a Manufacturer's Material Certificate of Conformance shall be provided for scrolls, housing side plates, inlets, support framing integral to the blower, and weld filler metal. All material designations shall be indicated on the fabrication drawings and in the material lists.

4.1.4 Blower bearing pedestals and motor bases shall be fabricated from structural steel shapes and plates properly reinforced for maximum rigidity, so they do not amplify motion from the blower or its components at any speed of operation..

4.1.5 Blower housings shall be fabricated from materials specified in Blower Data Sheets.

4.2 Electrical

4.2.1 Low voltage power and control cables which are located external to the enclosures and not integral to the components shall be stranded copper, 600 V type XHHW-2 or Buyer-approved equivalent.

4.2.2 Internal enclosure wiring shall be stranded copper, flame-retardant, 600 V, synthetic heat resistant (SIS), or machine tool wire (MTW), or high-flexible thermoset.

4.2.3 Electrical equipment on the packaged unit shall be grounded to the package unit skid.

4.2.4 The minimum size of conductor will be as follows (this requirement does not include cabling integral to components):

Duty	External Conductor Size (AWG)	Internal Wiring in enclosures Size (AWG)
Power and Lighting (480 V and below only)	12	14
Current Transformer Wiring	10	10
Control Circuits (120 V AC / 125 V DC) and Instrument power circuits	14	16
Instrumentation – Single pair or triad cable	16	18
Instrumentation – Multi-pair or triad cable	18	18
Communication cable (Fieldbus, Profibus)	18-22	18-22

4.2.5 Enclosures

The Supplier shall furnish terminal boxes as follows:

4.2.5.1 Wiring for electronic, instrument, communication and signal cables shall be segregated from both power and control cables. The 120VAC power supply for instruments will be routed in the same panel as the instrument wires.

4.2.5.2 Enclosures shall be designed for front access only unless otherwise specified. All components and equipment in enclosure shall be accessible and removable from the front. Enclosures shall be suitably rated for the environment specified.

4.2.5.3 Where cables to the blower are to be supplied and installed by the Buyer, the Supplier shall provide space for installing and terminating the cables.

4.3 Prohibited Materials

4.3.1 Bronze, copper, lead, zinc, tin, antimony, cadmium, or other low melting point metals, their alloys, or materials containing such metals as their basic constituents or molybdenum, and materials with halogen content of more than 200 ppm shall not be used in direct contact with stainless steel.

4.3.2 Asbestos and Teflon shall not be used in any component of the blowers or accessories.

4.3.3 Certain chemicals and materials are restricted from use at WTP. Restricted chemicals and materials are given in 24590-WTP-LIST-CON-08-0001, Restricted Materials List. Inclusion of these chemicals/materials requires specific authorization from the Buyer (WTP Safety Assurance).

5 Fabrication

5.1 Fabrication of Blowers

5.1.1 Blower wheels / impellers shall be of the type and fabricated from materials specified in Blower data sheets.

5.2 Welding

5.2.1 All fabrication, welding, inspection and repair procedures of blower wheels, blower housing, housing framing and supports shall conform with the following, as applicable:

- AWS D1.1, Structural Welding Code, Steel
- AWS D1.3, Structural Welding Code, Sheet Steel
- AWS D1.6, Structural Welding Code, Stainless Steel
- AWS D9.1, Sheet Metal Welding Code
- AWS D14.6, Welding of Rotating Elements of Equipment

5.2.2 Repairs required as a result of weld rejection by either Buyer or Seller's final inspection shall be fully documented in accordance with Seller's QA program. Weld repair records shall be included with document package.

5.2.3 Welding procedures and procedure qualification records shall be submitted to Buyer for review and permission to proceed prior to use. Each procedure shall be prepared and qualified in accordance with the requirements of the above listed standards or ASME B & PVC, Section IX.

5.2.4 All welded seams on the pressure boundary of the unit shall be continuously seal welded.

6 Tests and Inspections

6.1 General

Multi-stage blower performance testing shall be in accordance with ASME PTC-10-1997.

Seller shall conduct and shall be responsible for the shop tests called for in this specification and in applicable standard and referenced documents. Seller shall furnish all facilities necessary for the performance of such tests.

Seller shall submit an inspection and test plan for Buyer review and approval.

6.2 Environmental Equipment Qualification

Environmental equipment qualification of the blowers, motors, instruments, and electrical accessories shall be conducted in accordance with specifications, 24590-WTP-3PS-JQ06-T0005, Engineering Specification for Environmental Qualification of Control and Electrical Systems and Components .

6.3 Seismic Equipment Qualification

Seismic qualification of the design of blowers shall be in accordance with the methods and procedures described in Specification 24590-WTP-3PS-SS90-T0001, "Seismic Qualification of Seismic Category I/II Equipment and Tanks", or 24590-WTP-3PS-FB01-T0001, "Structural Design Loads for Seismic Category III/IV Equipment and Tanks".

In addition to seismic analysis, seismic testing of a sacrificial unit to determine operability shall be required when the Environmental Qualification Data Sheet states the equipment must be operational after a seismic event. Material from the sacrificial units shall not be used in tagged equipment (permanent plant equipment).

6.4 Personnel Qualifications

6.4.1 Personnel performing nondestructive examination or reviewing nondestructive examination results shall be qualified in accordance with ASNT-SNT-TC-1A, Level II or Level III. Qualifications of personnel performing inspections and tests shall be verified by the Seller.

6.5 Non-Destructive Examinations

6.5.1 Seller shall perform Non-Destructive Examinations. Non-Destructive Examinations may include visual, ultrasonic, radiographic, magnetic particle, liquid penetrant and eddy current examination procedures.

6.5.2 Non-Destructive Examination procedures shall be submitted to Buyer for review and permission to proceed prior to use.

6.5.3 All pressure boundary parts made by casting shall be demonstrated to be surface-defect free by penetrant examination using Type I Method A techniques in accordance with ASME BPVC Section V.

6.5.4 All welds shall be 100% visually (VT) and liquid penetrate (PT) examined.

6.6 Shop Tests

Buyer's inspector will indicate tests and inspections that the inspector intends to witness after review of Seller's work plan. Seller shall perform standard factory tests, which, as a minimum, includes the following tests listed in sections 6.6.1 through 6.6.6, as well as tests called out in referenced specifications for the motors.

All test results shall be certified, documented, and submitted to Buyer for review, and permission to proceed. All test reports shall be accepted by Buyer based on the acceptance criteria outlined in the Supplier's test procedures. Acceptance of a test report shall be confirmed by receiving a status of "Work may proceed" from the Buyer.

The inspector may witness the following required shop tests:

6.6.1 Test for blower performance. Performance testing shall be done on one (1) of similar size blowers.

6.6.1.1 Multi-stage blower performance ratings may be based on testing in accordance with ASME PTC-10-1997. Inspection and test procedures shall be submitted to Buyer. Test records and results shall be certified.

6.6.2 Functional performance test for electrical equipment.

6.6.3 Vibration performance shall be checked and reported at 10% increments of full speed blower tests. Vibration testing shall not be performed within +/- 20% of the blower's critical speed.

6.6.4 A meg-ohm test of all wires shall be performed prior to termination of all wires pulled into conduit. The meg-ohm test results shall be certified, documented, and submitted to Buyer for review.

6.6.5 A continuity check of all wiring shall be performed to verify conformance with Seller's wiring schematics. The continuity check test results shall be certified, documented, and submitted to Buyer for review.

6.7 Site Tests

Buyer startup personnel will perform test after initial installation. Buyer may request Seller assistance during startup.

7 Preparation for Shipment

7.1 General

Blower assemblies shall be packaged, shipped, handled and stored in accordance with ASME NQA-1, Part II, Subpart 2.2, Article 302, *Levels of Packaging*, at the following levels:

Level B:

- Blower assemblies with motors
- Motors in packages separate from the blower

Level C:

- Blower assemblies without motors and adjustable speed drives

7.2 Cleanliness

Seller's cleaning procedures shall be submitted to Buyer for information. Prior to surface preparation and coating application, visually examine welds, the blower impeller, gas stream surfaces of the blower housing, and the gas stream surfaces of all furnished accessories. Remove all dirt, oil, and grease, loose mill scale, weld spatter and other foreign matter on surfaces to be painted in accordance with Seller's cleaning and coating procedures.

7.3 Painting and Special Protective Coatings

7.3.1 See Attachment B

7.4 Tagging

A stainless steel nameplate shall be attached to each centrifugal blower showing the manufacturer's name, shop location, date of manufacture, serial number, equipment rating, equipment tag numbers, weight of assembly and purchase order number. Instruments shall be identified with Buyer provided tag numbers.

7.5 Packaging

Packaging shall be at the ASME NQA-1, Part II, Subpart 2.2, Article 302, *Levels of Packaging*, at levels in Section 7.1 above.

7.6 Documentation

Seller shall ensure that appropriate documentation is prepared and, if required, signed by the appropriate person(s). The shipping documentation shall accurately reflect specific traceability to the items being shipped. Drawings (wiring diagrams), showing external terminations for Buyer use to connect to Seller provided instrumentation shall be marked with the Buyer's instrument tag numbers.

8 Quality Assurance

The quality assurance program requirements of this specification are those specified in ASME-NQA-1 marked as applicable in Supplier Quality Assurance Program Requirements (SQAPR) Data Sheet attached to the material requisition, those specified in ASME NQA-1, Part II, Subpart 2.2, QA Requirements for Packaging, Shipping, Receiving, Storage and Handling of Items for Nuclear Power Plants, and those specified in 24590-WTP-3PS-G000-T0001.

8.1 QA requirements specific to item(s) or service

8.1.1 The supplier shall have in place a QA program meeting the applicable requirements of Part I of ASME-NQA-1 (2000). Quality Assurance Program Requirements datasheets attached to the MR define the requirements based upon the type or scope of work to be performed. The supplier shall

document and implement a QA program that is in compliance with these requirements. Each supplier is required to flow-down required QA program requirements to each successive tier in the supply chain. The supplier shall submit his QA manual with his bid.

8.1.2 The successful bidder must pass a pre-award survey by the Buyer. Supplier shall demonstrate that their quality program is in compliance with the procurement quality requirements listed in Quality Assurance Program Requirements Datasheets. The Supplier shall allow Buyer, its agent, and DOE access to their facility and any lower tier subcontractor's facility and records pertaining to this purchase order for the purpose of QA Audits and Surveillance at mutually agreed times.

8.2 Supplier Deviation

8.2.1 Each supplier shall be required to identify and promptly document all deviations from the requirements of the procuring documents. In addition, the supplier shall be required to described the recommended disposition based on appropriate analysis. Submittals of request for deviations from lower-tier suppliers shall be through the prime supplier to WTP.

8.2.2 Supplier-proposed deviations from procurement documents shall be initiated by use of Supplier Deviation Disposition Request (SDDR) form.

9 Configuration Management

Equipment and/or components covered by this specification are identified with Component Identification System numbers shown in Blower Data Sheets. Each item shall be identified in accordance with Section 7.4, Tagging.

10 Documentation and Submittals

10.1 General

Seller shall submit to Buyer Engineering and Quality Verification documents in the forms and quantities shown in Form G-321-E, Engineering Document Requirements, and Form G-321-V, *Quality Verification Document Requirements*, attached to the MR.

10.2 Submittals

The Seller shall submit the following:

10.2.1 Drawings

Drawings shall show the following information:

10.2.1.1 The outline dimensions of blower, including outline and detail drawings for each component (motor, etc). These drawings shall reflect the "as-shipped" configuration of the equipment and instrumentation. As a minimum, interface control drawings shall contain overall dimensions of the blower and motor, materials of construction, instrumentation interfaces and equipment mounting information including bolt hole sizes and quantities of bolts required.

10.2.1.2 Mounting dimensions and information required for the design of supports and foundations, including any special assembly instructions.

10.2.1.3 Operating weights of blower assembly including motor components.

10.2.1.4 The space required for the removal of components.

10.2.1.5 The locations of access doors.

10.2.1.6 The weights of individual components.

10.2.1.7 The locations and identification of parts that are included in the parts list.

10.2.1.8 Assembly drawings providing sufficient detail to facilitate assembly of the component parts of the blower.

10.2.1.9 Wiring schematic and control loop diagrams. Diagrams shall include wire gauges and fuse sizes applicable to the supplied units only.

10.2.1.10 The ASTM or equivalent designation for materials.

10.2.1.11 Interconnection diagram and cable schedule showing details of all internal connections and Buyer external connections. The Supplier's furnished cable schedule shall include service voltage and Class of Circuit per NEC Articles 725, 760 and 800 for each cable.

10.2.1.12 Blower performance curves at 60%, 80%, 100%, and 110% design speed at design conditions specified on the data sheets. Provide preliminary performance curves prior to submitting equipment drawings.

10.2.1.13 Blower performance curves including unstable operating surge region/limit.

10.2.1.14 Location and type of anchor bolts.

10.2.2 Procedures

Procedures are to be submitted to Buyer for approval prior to use and shall include:

10.2.2.1 Welding procedures

10.2.2.2 Procedures for repairs of rejected items or parts.

10.2.2.3 Cleaning and coating procedures.

10.2.2.4 Electrical component performance test procedures

10.2.2.5 Seller's shipping preparation and storage procedures.

10.2.2.6 Seismic test procedure and blower performance test procedure.

10.2.2.7 Test procedures for blower housing and shaft leakage tests.

10.2.2.8 Test procedures for sound, over-speed, vibration, and mechanical running tests.

10.2.2.9 Environmental equipment qualification test procedures in accordance with specifications, 24590-WTP-3PS-JQ06-T0005, Engineering Specification for Environmental Qualification of Control and Electrical Systems.

10.2.2.10 Commercial Grade Dedication Procedure

10.2.2.11 Commercial Grade Dedication Plans

10.2.3 Inspection and Test Reports

10.2.3.1 Records of repairs of rejected items or parts.

10.2.3.2 Welding inspection reports and welding repair reports if required.

10.2.3.3 Electrical component performance test reports

10.2.3.4 Blower housing and shaft seal leakage test reports

10.2.3.5 Blower performance test reports, including blower curves

10.2.3.6 Sound power levels

10.2.3.7 Blower wheel/shaft vibration, over-speed, and mechanical test reports

10.2.3.8 Environmental equipment qualification test reports in accordance with specifications, 24590-WTP-3PS-JQ06-T0005, Engineering Specification for Environmental Qualification of Control and Electrical Systems.

10.2.3.9 Seismic qualification reports in accordance with 24590-WTP-3PS-JQ06-T0003, Engineering Specification for Seismic Qualification of Seismic Category I Control and Electrical Systems and Components and 24590-WTP-3PS-FB01-T0001, Engineering Specification for Structural Design Loads for Seismic Category III/IV Equipment and Tanks.

10.2.3.10 NRTL field evaluation report per specification 24590-WTP-3PS-G000-T0019

10.2.3.11 Commercial Grade Dedication Packages per specification 24590-WTP-3PS-G000-T0019

10.2.3.12 NDE reports

10.2.4 Calculations

10.2.4.1 Seismic analysis/calculations shall be submitted for Buyer's review and permission to proceed. Calculations shall be in accordance with 24590-WTP-3PS-G000-T0014, Engineering Specification for Supplier Design Analysis.

10.2.4.2 Corrosion analysis and estimated design life report.

10.2.5 Manuals

Manuals and instructions shall include:

10.2.5.1 Erection and installation manuals which provide complete, detailed procedures for installing and placing equipment in initial operation. The manuals shall include all erection and installation drawings.

10.2.5.2 Operation and maintenance manuals which provide complete, detailed descriptions of components and accessories with data sheets showing design, construction and performance data for equipment. Manuals shall include drawings required for operation, maintenance and repair, maintenance requirements, instructions and operational troubleshooting guides. All manuals/drawings shall include OEM part numbers.

10.2.5.3 Instruction manuals shall cover all major components such as blowers, motors, controls, and instrumentation, including those purchased from a subcontractor. The Seller shall obtain such manuals and lists, and submit them to the Buyer.

10.2.5.4 The Seller shall provide instructions regarding site long and short and long term storage up to 5 years, and preparation and protection of equipment after installation and prior to operation.

10.2.5.5 Where manuals include information applicable to several components, sizes or models, non-applicable information shall be lined-out.

10.2.6 Certificates of Conformance

10.2.6.1 Seller shall provide Certificates of Conformance demonstrating compliance with all applicable standards, specifications, and drawings.

10.2.6.2 Seller shall certify lifting eyes or lugs and/or spreader bars are suitable for the safe, balanced lifting, and handling of the equipment.

10.2.7 Schedules

Lists and schedules shall include:

10.2.7.1 Schedule of engineering, fabrication, and testing.

10.2.7.2 Parts list, and cost for parts and items subject to deterioration and replacement. Seller to state shelf life and storage requirements for spare parts.

10.2.7.3 List of recommended spare parts.

10.2.7.4 Schedule of maintenance and part replacements required to maintain the equipment qualification in accordance with requirements in section 6 of specifications, 24590-WTP-3PS-JQ06-T0005, Engineering Specification for Environmental Qualification of Control and Electrical Systems.

10.2.8 Materials Certificates

10.2.8.1 Material Certification for components of the blowers shall be submitted as noted in Paragraphs 4.1.1, [illegible] and 4.1.3.

10.2.8.2 Certificates of calibration referenced to NIST traceable standards required for any calibratable instrumentation provided with the equipment.

10.2.9 Data

Data shall include:

10.2.9.1 Buyer's data sheets, completely filled out by the Seller, showing all information required to determine that the units are of the design and materials specified herein, including motor data sheets.

10.2.9.2 Buyer's equipment qualification data sheets, completely filled out by the Seller, showing all information required to determine that the units are of the design and materials specified herein, including motor data sheets.

10.2.9.3 Acoustic data report. Sound test data from similar equipment previously tested can be submitted in lieu of test for the purchased equipment.

Attachment A

Noise Requirements for Fans and Blowers

Attachment A
Noise Requirements for Fans and Blowers

1 Scope

This Attachment to the specification covers noise requirements for blowers, including all motors, equipment, and sub-systems furnished by the Supplier.

2 Permissible Noise Levels

The noise limit applies to operation of the Equipment at rated load or full capacity, and during restart and shut down. When the Equipment or a sub-system is operated cyclically or intermittently, the noise limits apply during all portions of the cycle.

The A-weighted sound pressure level at 3 feet from the surface of the blower casing shall not exceed 85 dBA. The limit applies on each of four sides of the blower at the elevation of the centerline of the blower, but no less than 3 feet above grade or the platform upon which the blower is mounted. All sound pressure level limits apply to each blower system taken as a whole, and as installed.

If the Supplier cannot meet the required A-weighted limit for sound pressure level, even in a free field, the Supplier shall provide the A-weighted level that they can and will guarantee. Estimated octave-band and A-weighted sound power levels of the blower inlet/discharge shall be provided.

Attachment B

High Integrity Centrifugal Blowers-Multi-stage -Customized Coating Specification

Contents

1 Scope B-1
2 General B-1
2.1 Responsibility B-1
2.2 Surfaces Not To Be Coated B-2
2.3 Definitions B-2
2.4 Safety B-3
3 Applicable Documents B-3
3.1 Codes and Standards B-3
4 Submittals B-4
5 Quality Plan B-5
5.1 General B-5
6 Materials B-5
6.1 Coating Materials B-5
6.2 Manufacturer's Standard Coating B-6
6.3 Machined-Surfaces Coating B-6
6.4 Coating Over Stainless Steel B-6
6.5 Batch Information B-6
6.6 Abrasives B-7
7 Application B-7
7.1 General B-7
7.2 Pre-Surface Preparation B-7
7.3 Surface Preparation B-8
7.4 Coating Application B-10
7.5 Remedial Work B-11

8 Inspection B-11
8.1 General B-11
8.2 Surface Preparation Inspection B-13
8.3 Coating Application B-13
9 Storage, Handling and Shipping B-14
9.1 Coating Materials B-14
9.2 Steel Items and Equipment B-15
10 Documentation B-15
Appendix C of Attachment B Materials/Coating Systems B-16
Appendix D of Attachment B Coating Schedule B-17
Appendix F of Attachment B Coating Manufacturer's Product Identity Certification Record B-18
Appendix G of Attachment B Surface Preparation and Coating Inspection Form B-19
Appendix H of Attachment B Manufacturer's Standard Coating Data Sheet B-20

Attachment B - High Integrity Centrifugal Blowers-Multi-stage - Customized Coating Specification

Per 24590-WTP-3PS-AFPS-T0001, Rev. 4

ENGINEERING SPECIFICATION FOR 24590-WTP-3PS-MACS-T0005

NOTE: Only the sections and appendices contained in this Attachment B apply to the High Integrity Centrifugal Blower MR. For continuity and maintaining configuration control, the section numbers from the AFPS specification noted above have been retained; inapplicable sections have been deleted.

Additional clarifications have been added to Sections 1.1, 6.4.1, and Appendix C, Table 2, Notes 1a and 1b, identified by an asterisk (*).

1 Scope

1.1 This specification defines the minimum requirements for Special Protective Coating (SPC) materials/coating systems, surface preparation, application, and inspection of protective coatings to be shop applied. Items and surfaces to be coated shall be coated in accordance with Appendix D of this specification. Unless indicated otherwise in the base technical specification/material requisition or purchase order, all coats will be shop applied. Finish color shall be *ANSI 70 Gray unless indicated otherwise in Section 2.0 of the Material Requisition (MR).

1.2 All Special Protective Coatings (SPC's) are designated as Commercial Grade (CM) and non-safety.

2 General

2.1 Responsibility

2.1.1 The SELLER shall supply all personnel, coating materials and all necessary surface preparation, application, inspection and other equipment as required.

2.1.2 The SELLER shall unload, inspect, and store all inbound steel items and equipment scheduled for coating when manufactured by others. Items found to be damaged or otherwise unsuitable for coating shall be identified and segregated for evaluation by the SELLER.

2.1.3 The SELLER shall store all coating materials, perform surface preparation, coating application and inspection in accordance with this specification and Buyer reviewed procedures. The coating systems and associated coating materials used shall be in accordance with Appendix D Coating Schedule or the Material Requisition (MR) when coatings are specifically identified.

2.1.4 The SELLER shall perform all inspections and tests contained in this specification as necessary prior to verification by the BUYER.

2.1.5 The SELLER shall provide application and inspection documentation for all coating work in accordance with this specification.

2.1.6 The SELLER shall provide environmental control equipment as necessary for coating application and curing.

2.1.7 The SELLER shall provide erection marking. Marks for color-coding of bulk materials and erection marking shall be fully compatible with the coating system specified.

2.1.8 The SELLER shall touch-up and repair defective or damaged coating in accordance with procedures submitted and reviewed by the BUYER.

2.1.9 The SELLER shall protect all coated surfaces prior to shipment and provide suitable coverings. ~~padding~~ padding, and strapping to protect coated items during shipment.

2.1.10 The SELLER shall only use inspection equipment that is currently (in date) calibrated.

2.2 Surfaces Not To Be Coated

2.2.1 Hold back coating from weld areas-

2.2.1.2 Three (3) to Four (4) inches for **shop** welds when using epoxy or other types of organic coatings

2.2.1.4 Note - The above coating hold back dimensions are only for items previously coated prior to welding. These coating hold back dimensions do not apply to shop welds that will be coated after welding is completed. This Section of the shop coating spec does not have anything to do with coating hold back requirements associated with visual inspection of welds during hydro testing. Coating hold back requirements associated with weld inspection must come from the prevailing code.

2.2.1.5 If the coating hold back at field welds is greater than 50% of the surface area of the item then the item does not required shop coating, however the items shall be blasted to remove all mill scale.

2.2.1.6 The coating hold back shall be sufficient to expose the entire shop weld for visual inspection on items fabricated prior to coating.

2.2.2 Name and instruction plates, etc.

2.2.3 Rubber or similar nonmetallic parts.

2.2.4 Machined surfaces.

2.2.5 Non-Ferrous metals unless otherwise specified.

2.2.6 Stainless Steel surfaces, unless specifically required by the BUYER (areas where stainless steel is welded to carbon steel the coating overlap onto the stainless steel shall be approximately 1 inch or as otherwise specified.)

2.3 Definitions

2.3.1 Batch- A quantity of coating made in one production run. A unique batch number is assigned for each production run of the coating material, curing agent, zinc powders, ~~[illegible]~~ and thinner.

2.3.3 Dry Film Thickness (DFT)- The thickness of an applied coating, once dry or cured. Usually expressed in mils (each mil is 1/1000 of an inch).

2.3.4 Fish Eyes (cratering)- Formation of holes or visible depression in the coating film. Usually from a contaminated particle on the surface prior to applying the coating.

2.3.5 Holiday- A Pinhole, skip, discontinuity, or void in the applied coating film.

2.3.7 Mfg. Std. Coating- A manufacturers standard coatings system applied to off the shelf items or standard line items of routine manufacture that are not specifically manufactured for the WTP project.

2.3.8 NIST- National Institute of Standards and Technology.

2.3.10 Pinholes- Minute holes visible in the applied coating without magnification that appears to penetrate one or more layers of the coating film.

2.3.11 Profile- The surface roughness resulting from surface preparation by abrasive blasting or other authorized methods. (Refer to Section -7.3.6).

2.3.13 Sag- The running of freshly applied coating on a vertical surface due to being applied too thick. (Same definition for runs and drips)

2.3.16 Training and Certification- Training shall include an understanding of the specification, work procedures and manufacturers published instructions. Certification shall include a documented performance test demonstrating quality work verifiable by the BUYER. (Refer to Sections 4.8, 5.1.7, 7.1.2, and 8.1.1.1)

2.4 Safety

2.4.2 The SELLER shall comply fully with OSHA Hazard Communication Standard 29CFR 1910. Material Safety Data Sheets (MSDS) for all materials, including thinners and cleaning solvents, shall be obtained from the materials manufacturer and upon request made available, at the place and time of work, for review.

2.4.3 The Volatile Organic Compound (VOC) content of all materials shall comply with Federal, State and Local or other Regulatory requirements.

3 Applicable Documents

3.1 Codes and Standards

The latest applicable edition of the following codes, standards, specifications or WTP procedures form a part of this specification.

3.1.1 American Society for Testing and Materials (ASTM)

ASTM E337- R96: 02	Test for Relative Humidity by Wet-and-Dry Bulb Psychrometer
ASTM D3276- 00: 05	Standard Guide for Painting Inspectors (Metal Substrates)
ASTM D4285- 99	Test Method for Indicating Oil or Water in Compressed Air
ASTM D4417- 99: 03	Field Measurement of Surface Profile of Blast Cleaned Steel

ASTM D4537- 96; 04; 04a	Standard Guide for Establishing Procedures to Qualify and Certify Inspection Personnel for Coating Work Inspectors in Nuclear Facilities.
ASTM D4940- 98; 03	Test for Conductimetric Analysis of Water Soluble Ionic Contaminants of Blasting Abrasives
ASTM D5064-01	Standard Practice for Conducting a Patch Test to Assess Coating Compatibility

3.1.2 The Society for Protective Coatings (SSPC)

SSPC-AB1 6/1/97; 7/1/07	Mineral Slag Abrasive
SSPC-PA2 5/1/04	Measurement of Dry Paint Thickness with Magnetic Gages
SSPC-SP1 11/1/82; 11/1/04	Solvent Cleaning
SSPC-SP10 11/1/04	Near White Metal Blast Cleaning
SSPC-SP11 11/1/87; 11/1/04	Power Tool Cleaning to Bare Metal
SSPC-VIS 1 6/1/02; 11/1/04	Guide and Reference Photographs for Steel Surfaces Prepared by Dry Abrasive Blast Cleaning

3.1.3 Occupational Safety and Health Administration (OSHA)

OSHA 29 CFR 1910	Occupational Safety and Health Standards

4 Submittals

4.1 SELLER shall prepare detailed written procedures for material receiving, marking, storage, handling, surface preparation, environmental control, application, curing, inspection, testing, touch-up/repair, application personnel qualification, inspector qualification, (G321- E , category 28.0) and proposed documentation forms as described within this specification. The final procedure and documentation forms shall be submitted and reviewed with BUYER's permission to proceed prior to the start of coating work. (G321-E category 15.0). Submittal requirements for manufacturers standard coating are found in Section 6.0.

4.2 The SELLER shall submit all procedures and verification documents in accordance with the purchase order (e.g., Appendix J, Form G-321-E, & V, Exhibit "D" located in the purchase order.).

4.4 The SELLER shall identify the specific products by manufacturer and catalog number and shall submit the coating manufacturer's latest published product data sheet, application [illegible] and Material Safety Data Sheets (MSDS). Conflicts, if any, between the SELLER's normal procedures, the coating manufacturer's recommendations, and this specification shall be brought to the attention of the BUYER for resolution and written permission to proceed. (G321-E category 11.0)

4.5 The SELLER shall submit original or copies of original Coating Manufacturer's Product Identity Certification Records for each and every batch of coating material used on the WTP project (Appendix F). (Refer to G321V category 13.0)

4.6 The SELLER shall submit a daily inspection record as part of the work procedures that includes all the elements provided in Appendix G as a minimum. An entry for Wet Bulb is not required when the accepted device used to measure humidity and dew point does not require a wet bulb. (Refer to Section 8.1.9 and 10.2) (G321V category 15.0)

4.8 The SELLER shall provide a personnel training and certification plan for applicators and inspectors. (Refer to Section 2.3.16, 5.1.7, 7.1.2 and 8.1.1.1.).

5 Quality Plan

5.1 General

5.1.1 The SELLER shall control the quality of items and services to meet the requirements of this specification, applicable codes and standards, associated procurement documents, referenced herein. The SELLER shall prepare and maintain documentation to provide evidence of compliance with reviewed procedures and this specification. A copy of the coating inspection documentation shall be included in the shipping documentation.

5.1.2 The SELLER, including any lower-tier organizations engaged by him, shall be subject to surveillance inspection by the BUYER representative until completion or termination of the procurement. This surveillance inspection does not relieve the SELLER from the responsibility for conformance to the requirements of procurement documents, this specification and authorized procedures.

5.1.4 The BUYER representative shall be provided with a work activity schedule and shall be notified of all required inspection points prior to the scheduled date for coating activities (Refer to MR Section 5.0).

5.1.5 If the SELLER's proposed work plan or procedures differ from the requirements of this specification, the SELLER shall specifically identify and explain all differences in writing and submit them to the BUYER for review and verification prior to the start of work (e.g., Supplier Deviation Disposition Request- SDDR).

5.1.6 All pre-established witness and hold points shall be witnessed by the BUYER unless a written waiver has been issued.

5.1.7 The SELLER's coating inspectors shall have previous experience in coating inspection and shall receive documented training in the specific project coating requirements, ASTM standards and other relevant standards including the reviewed work procedures. All coating inspectors working on steel items or equipment shall be trained and qualified meeting the requirements of Section 8.1.1.1.

6 Materials

6.1 Coating Materials

6.1.2 Coating materials including the primer, intermediate and finish coat on a given item, shall all be from the same manufacturer. One exception to this rule is when upgrading a Manufacturer's Standard (Mfg. Std.) coating using a compatible epoxy tie-coat and suitable topcoat coating system (refer to Section 6.2).

6.1.3 Appendix D Coating Schedule and Appendix C Tables contain the specified Special Protective Coatings for the WTP project. Appendix C contains the generic coating systems and approved coating materials.

6.1.4 Repair materials shall be the same as those originally used. Repair materials shall be in pre-measured units, and only complete kits shall be mixed. Splitting or breaking down pre-measured units of multi-component coating materials may be considered if the SELLER prepares a procedure that requires accurate measurement of all materials and Seller's Quality Control (QC) inspector monitoring/verification of each and every mix. This procedure must be submitted to the BUYER for review and permission to proceed.

6.2 Manufacturer's Standard Coating

6.2.1 Components and equipment which are normally mass-produced, inventoried, and supplied from stock generally have been coated with the Manufacturer's Standard Coating (Mfg. Std.) system. Included are small valves, pumps and rotating equipment, filters and electrical equipment such as switchgear, control panels, instrumentation, motors, transformers and electrical enclosures. Items and equipment which are specifically fabricated for the WTP project shall be coated per this specification unless the item is shown to be too delicate to properly coat per Appendix D or the specific requirements contained in the MR.

6.2.1.1 The SELLER may submit an alternate coating to the specified or Mfg. Std. System, by identifying the coating materials, surface preparation, application and inspection on Appendix H including the coating material's latest published technical data sheet and MSDS, to the BUYER for review and permission to proceed.

6.2.1.2 All Mfg. Std. Coatings must be identified on an Appendix H and submitted to the BUYER along with technical data sheets and MSDS'. A small, easily replaceable item where coating touch-up is not practical (e.g., very small, too delicate, low cost and easily replaceable) and can only be purchased with the manufacturer's standard coating, an Appendix H Manufacturer's Standard Coating Data Sheet is not required.

6.3 Machined-Surfaces Coating

6.3.1 Machined surfaces not specified to be coated with a specific coating system shall be protected with a solvent cutback asphalt temporary preservative (Daubert Chemical Tectyl 891, EF Houghton Chemical Rust Veto 342 or authorized equivalent). Temporary preservative applied to carbon steel that is overlapped onto stainless steel must meet the same chemical requirements as listed in Section 6.4. All equivalents must be identified on an Appendix H form and submitted along with the manufacturer's latest published data sheet and MSDS for review and permission to proceed by the BUYER.

6.4 Coating Over Stainless Steel

6.4.1 All coating materials, thinners, solvents and cleaning materials used on SS shall be shown to comply with the following requirements:

1) Leachable halogen content shall not exceed 200 ppm.

2) The total sulfur content shall not exceed 400 ppm.

3) The total of low melting point metals such as lead, zinc, copper, tin, antimony and mercury shall not exceed one (1) percent. Of this, mercury should not exceed 50 ppm. These low melting metals shall not be intentionally added during the manufacture of the coating.

*(ADDED for High Integrity Centrifugal Blowers MR): Sherwin Williams Macropoxy 646 and Carboline Carboguard 890 have been tested and meet the requirements above. Only these materials are approved for direct contact with stainless steel.

6.5 Batch Information

6.5.1 Each container of coating material used by the SELLER shall be marked with the following:

- The manufacturer's name

- The product designation
- Batch or lot number
- Location and date of manufacture
- The shelf life expiration date

6.6 Abrasives

6.6.1 Abrasives for blast cleaning shall be clean, free of oil or contaminants, and dry. The particle size shall be capable of producing the specified surface profile. Mineral and slag abrasives shall meet the requirements of SSPC AB-1. The first batch/lot of bulk, non-packaged, abrasives shall be tested for water-soluble contaminants and the conductivity shall not exceed 500 micro siemens/cm when tested in accordance with ASTM D4940. As an alternate, a chloride ion test kit, such as the Chlor*Test "A" manufacturers by Chlor Rid International Inc, or BUYER accepted equal may be used. The maximum allowable chloride level is 200ppm.

6.6.2 When using reclaimed steel grit/shot abrasive, the particle size shall be capable of producing the specified angular surface profile (minimum 50% steel grit in original mix and all adds shall be 100% steel grit). Reclaimed abrasives already in use and the first batch/lot of new abrasive shall be tested for water-soluble contaminants and conductivity. Conductivity shall not exceed 500 micro siemens/cm when tested in accordance with ASTM D 4940. As an alternate, a chloride ion test kit, such as the Chlor*Test "A" manufactures by Chlor Rid International Inc, or BUYER accepted equal may be used. The maximum allowable chloride level is 200ppm.

7 Application

7.1 General

7.1.1 It shall be the SELLER's responsibility to stop the surface preparation and coating at any time when conditions exist that might adversely affect the quality. The BUYER representative may reject any prepared or coated surfaces not in compliance with this specification.

7.1.2 All painters (e.g., surface preparation personnel and paint/coating material application personnel), shall be individually qualified and certified in accordance with the SELLER's written description that includes classroom training and capability demonstration using the WTP project specification, and the SELLER's procedures as reviewed by the BUYER.

7.1.3 Care shall be taken to avoid blasting or grinding away critical markings, which identify welders, joint numbers, or other markings, which identify the item. Where such data appears in the area to be coated, it shall be protected. SELLER's are responsible for assuring their sub-suppliers are instructed concerning these requirements.

7.2 Pre-Surface Preparation

7.2.1 Prior to mechanical cleaning, the surfaces to be coated shall be cleaned in accordance with SSPC SP1 to remove oil, grease, dirt, and other foreign matter that can interfere with the proper bonding of the coating. Any remaining sharp edges, weld spatter, or burrs found after the start of coating work shall be completely removed by grinding or other means. Pneumatic tools shall not be used unless they are fitted with effective oil and water traps on the exhaust air. If the steel items or equipment was shipped or stored so that the surface could have been contaminated with soluble salts (e.g., above deck ship transport, truck transport on

dirt roads close to ocean, storage), the area shall be pressure water washed (2,000-5000psi) with demineralized water to remove as much soluble salt contamination as possible prior to abrasive blasting.

7.3 Surface Preparation

7.3.1 Prior to the start of work, the SELLER shall examine all surfaces to be coated to determine their acceptability for the specified coating application. If the surfaces are found to be unacceptable, the SELLER shall return the surface to an acceptable condition. Coating work shall not commence until corrective action has been taken. Commencement of coating work prior to the taking of correctable action shall preclude any subsequent claim by the SELLER. The BUYER may require corrective action at the SELLER's expense.

7.3.2 Prior to blast cleaning items to be coated, they shall be visibly dry with the surface temperature of at least 5°F above the dew point. When using automatic blasting equipment that recycles steel abrasive, the steel need only be visibly dry.

7.3.3 All surfaces to be coated shall be pre-cleaned per SSPC SP 1 where oil, grease, and other contaminants are present.

7.3.4 Abrasives shall meet the requirements of Section 6.6.

7.3.5 Surfaces to be coated shall be blast cleaned in accordance with the surface preparation requirements specified in Appendix D (e.g., SSPC SP10). Where abrasive blasting will damage the items or is impractical, SSPC-SP11 Power Tool Cleaning to bare Metal may be substituted only in limited areas and only with BUYER's permission to proceed (e.g. SDDR).

7.3.6 Abrasive blasting carbon steel shall result in an angular surface profile 1.5 to 3.0 mils deep as measured using a profile comparator or Testex Press-O-Film replication tape, in accordance with ASTM D4417 method A or C.

7.3.6.1 Methods established for measuring surface profile produced by abrasive blast cleaning are not valid or conclusive on surfaces that are excessively rough prior to blast cleaning (e.g. rough mill finishes, heavy rusting or pitting [SSPC-VIS 1 Condition D or rougher], cast surfaces, weld beads or physically damaged surfaces). Therefore, to accurately determine the surface profile produced by blast cleaning, profile measurements shall be taken in areas exhibiting the least surface roughness. For example, SSPC-VIS 1 pre-blast Conditions A, B or C typically result in a blasted surface that is acceptable for surface profile measurement.

7.3.6.2 If excessive surface roughness covers the entire item, then a smooth, clean ASTM A36 steel plate (e.g., SSPC-VIS 1 Condition A, B or C), approximately 6 inch square and at least $^1/_4$ inch thick, shall be blasted using the identical abrasive, pressure, nozzle, blasting equipment and method used on the actual item. The surface profile measured on the smooth plate is regarded as an accurate measurement of the profile produced by that blasting method, and shall be recorded as the surface profile for the actual item. A new plate shall be blasted and measured at a frequency accepted in the SELLER'S procedures (refer to Section 8.1.9).

7.3.7 Recycled abrasive blasting using a steel grit/shot mix is acceptable. The maximum amount of shot in the original mix shall be 50%. All additions of abrasive shall be steel grit. The stabilized working mix shall be maintained by frequent small additions of new grit abrasive commensurate with consumption. Infrequent

large additions of grit shall be avoided. Steel grit or shot is not acceptable for use on stainless steel surfaces.

7.3.7.1 The working abrasive mix shall be maintained clean of contaminants by continuous effective operations of cleaning machine scalping and air wash separators. Reclaimed grit used for abrasive cleaning shall be tested for the presence of oil/grease by immersing a sample in clean tap water and checking for oil flotation. Tests shall be made at the start of blasting and at a minimum of every four (4) hours thereafter. If oil is evident, the contaminated abrasive shall be cleaned or replaced. All surfaces blasted since the last successful test shall be completely cleaned of contamination then re-blasted using clean abrasive.

7.3.8 Blast cleaning shall not be performed in the immediate area where coating or curing of coated surfaces is in progress. All surfaces and equipment, which are not to be coated, shall be suitably protected from blast cleaning.

7.3.9 Burrs, slivers, scabs, lamination, and weld spatter which become visible after blasting shall be removed. The tools and manner employed to remove weld defects and sharp edges shall not burnish or destroy the profile. If the profile or roughness is reduced, it shall be re-blasted to produce the profile and roughness as required. The exhaust of pneumatic grinders shall not impinge on the cleaned surface. If the surface becomes contaminated, it shall be cleaned of contamination and re- blasted. Carbon steel tools or implements specifically employed for coating surface preparation shall not be used on stainless steel surfaces.

7.3.10 If visible rust occurs or if the cleaned surface becomes wet or otherwise contaminated, these surfaces shall be re-cleaned to the degree specified. Cleaned surfaces remaining uncoated overnight shall be visually reinspected 100% for required cleanliness prior to coating or shall be re-cleaned to the specified cleanliness prior to applying the coating.

7.3.11 After surface preparation is complete and before coating, pressurized air or a vacuum shall be used to remove all dust and abrasive residue. The air shall be clean and dry as verified in accordance with Section 8.1.6 so as not to contaminate the prepared surface.

7.3.12 Machined surfaces shall be wiped with clean solvent before the application of coating and shall be protected from damage due to blasting and coating operations.

7.3.13 Machined portions of pipe flanges and other machined mating faces which will not be exposed after final fit-up shall be masked or covered and protected from surface preparation and coating activities. The remaining part of the flange face and exposed surfaces shall then be blasted and coated (bolt holes need only to be sufficiently coated for visible coverage. No dry film thickness required.).

7.3.14 Equipment shall have all openings plugged, masked, and/or blinded sufficiently to protect internals before abrasive blasting. After the coating operation is complete all internals shall be blown clean and/or vacuumed to remove any dust or abrasive blast media that may have entered the coated equipment.

7.3.15 The abrasive mixture and the compressed air shall be clean, dry, and oil free. Moisture traps, in addition to oil and water extractors mounted on the compressor, shall be used in compressed air lines to remove oil and moisture from air close to the point of use. (Refer to Section 7.3.7.1 and 8.1.6)

7.3.16 All valves, valve actuators and motors that will be shop coated shall be blasted and coated prior to assembly. Areas of assembled items that are not coated prior to assembly and subject to damage during blasting must be carefully protected from abrasive damage or abrasive contamination.

7.4 Coating Application

7.4.1 The coating shall be applied in accordance with reviewed procedures (refer to Section 4.1). The coating manufacturer's recommendations for the application temperature and the curing temperature and times (between coats and after last coat) of the specified material shall become a part of this specification. Application and curing temperatures above or below the limits allowed by this specification (Refer to Section 7.4.4) shall be submitted to the BUYER for review (e.g., SDDR).

7.4.2 Coatings shall be applied using properly sized and type of equipment for the size & complexity of the item being coated. The equipment shall be clean with all components in good working order.

7.4.3 Surfaces that will become inaccessible shall be coated before assembly, tagging, fitting, or welding. Inaccessible surfaces includes lap joint flanges, nozzle necks, lap joint stub ends, lap rings, bolt holes, flanges for exchangers and vessels, and welded joints that become inaccessible after assembly.

7.4.4 Coatings shall be applied only when the surface to be coated is clean and dry. The substrate temperature shall be a minimum of 5°F above the dew point during coating application and until the applied coating is no longer moisture sensitive per the coating manufacturer's published data or written recommendations. The substrate and air temperature during coating application and curing shall be a minimum of 50°F (inorganic zinc primers 40°F) and a maximum of 110°F. The relative humidity during coating application shall not exceed 85 percent. Measure humidity in accordance with ASTM E 337 (Sections 1.0-19.0) or using an alternate method reviewed and accepted by the BUYER. Deviations from the above listed minimum and maximum substrate/air temperature and humidity limits may be allowed when in accordance with the coating manufacturer's published or written recommendations and are accepted by the BUYER. The one firm limit is that the minimum substrate or air temperature shall not be less than 35 °F regardless of the coating manufacturer's published or written recommendations.

7.4.5 The SELLER shall record all batch numbers for each coating component used along with other information necessary for the BUYER to relate the batch to the item for which it was applied. (Refer to Appendix G)

7.4.6 All coatings shall be thoroughly mixed until they are smooth and free from lumps, then strained through a screen of at least 30 mesh. Zinc filled coatings shall be continuously agitated from the time initially mixed and while being applied. Other coating materials shall be mixed in accordance with the coating manufacturer's published recommendations. All multi-component coating materials shall be in pre-measured units. Splitting or breaking down pre-measured units is not permitted. See Section 6.1.4 for requirements for mixing repair materials.

7.4.7 Alternating coats shall have a visible color difference to insure full coverage over previous coats. Touch-up of individual small spots < 6 sq. in. do not require a visible color difference when individually marked for repair and the mark remains in place until the repair is accepted.

7.4.8 Dry film thickness of each coating shall be in accordance with Appendix C/Table 1 Acceptable Coating Materials or as specified in the MR. (Refer to Section 8.3.2 & 8.3.3).

7.4.9 Relative to the ambient and surface temperatures the minimum and maximum drying times between coats shall be in strict accordance with the coating manufacturer's latest published technical data sheets.

7.4.10 Runs, sags, voids, drips, overspray, loss of adhesion, bubbling, peeling, or inadequate cure are not permitted. Where possible, defects shall be corrected as detected during application of the coating.

7.4.11 Spray equipment, brushes and rollers shall be cleaned using only manufacturer recommended solvents/cleaners.

7.5 Remedial Work

7.5.1 The completed coating on each item shall have the correct dry film thickness and shall be free of damage and visible defects.

7.5.2 Repair of Dry Film Thickness (DFT) deficiencies

7.5.2.1 Defects such as runs, sags, overspray and embedded particles shall be corrected by sanding to remove the defect. When the defects are in the finish coat, all areas sanded must be overcoated with the finish coat. If the DFT of primer or intermediate coat is reduced to less than the specified minimum, the area shall be abraded with 80 grit sand paper or flapper wheel and an additional layer of coating shall be applied until sufficient thickness is achieved. If noticed during application, the sags or runs may be brushed out.

7.5.3 Repair of Damage

7.5.3.1 All damaged and loosely adhering coating shall be removed and the surface thoroughly cleaned using 80 grit sanding disc, 80-grit flapper wheel or 3M Clean-N-Strip. Edges of the breaks shall be feathered and the resulting surfaces shall be roughened. The designated number of prime and finish coats shall be applied.

7.5.4 Loss of adhesion, delamination blisters, bubbling and fish eyes in the applied coating require the coating to be removed and reapplied in accordance with this specification.

8 Inspection

8.1 General

8.1.1 The SELLER shall have the full responsibility for the coating application quality in accordance with this specification and shall be responsible for stopping work activities when conditions develop that could adversely affect the quality of the completed work. All work is subject to the BUYER's inspection surveillance.

8.1.1.1 All coating work inspection personnel shall be trained, qualified and certified in accordance with the SELLER's reviewed procedures. The inspectors shall meet or exceed the minimum capability requirements for a Level I coatings inspector as described in ASTM D4537 Section 6.2. The SELLER's inspector training, qualification and certification procedures and plan shall include classroom training on the WTP project specification, and the SELLER's reviewed procedures using the guidelines provided in ASTM D5498. The SELLER's inspector must demonstrate his/her capability of using the inspection equipment and performing all the required inspections. Additional coating work inspection guidance is found in ASTM D3276 and ASTM D6237 which may also be used in developing procedures for training and certifying coating work inspectors.

8.1.2 The BUYER representative shall be the final authority on the specification compliance for surface preparation and material application. Any coating, which in the BUYER representative's judgment, has not been applied in conformance with this specification, shall be rejected.

8.1.3 The BUYER representative shall have access to each part of the process and shall have the right and opportunity to witness any of the Quality Control Tests.

8.1.4 The SELLER shall furnish the necessary testing and inspection instruments, properly calibrated and maintained. If equipment is suspected of being out of calibration, it shall be re-calibrated and certificates made available for verification to the BUYER. Such equipment shall be available for use by the BUYER in conducting surveillance of the work. Calibration of testing and Inspection instruments shall be traceable to NIST or Buyer authorized alternative standards.

8.1.5 The SELLER shall halt the coating work and make corrections to the procedures, as necessary to correct repetitive faults found in the work.

8.1.6 Prior to using compressed air, the quality of the air downstream of the separator shall be tested in accordance with the requirements of ASTM D4285 by blowing the air onto a clean white blotter or cloth for two (2) minutes at a distance of no more than (12) inches to check for any contamination, oil, or moisture. "This test shall be performed at the start of work and every 4 hours thereafter". The test shall also be made after any interruption of the air compressor operation or as required by the BUYER. The air shall be used only if the test indicates no visible contamination, oil, or moisture. If contaminants are evident, the equipment deficiencies shall be corrected and the air stream shall be re-tested. Moisture separators shall be bled continuously. All lines shall be tested individually prior to use. Surfaces determined to have been blown down or blasted with contaminated air shall be cleaned of all contamination then re-blasted with clean air and abrasive. Coatings determined to have been applied using contaminated air shall be removed and reapplied using clean air.

8.1.7 Inspection points shall be established as follows:

- Prior to the start of work.
- Immediately following the surface preparation
- Immediately prior to the coating application
- Following the application of each coat
- Following the curing of the coating
- Final inspection and sign-off, in accordance with the project requirements

8.1.8 Any defects disclosed by inspection shall be re-inspected after correction.

8.1.9 The SELLER shall keep the records indicated below, and submit these records to the BUYER (refer to Section 4.6 and Appendix G). The following lists the frequencies:

Coating/Inspection Step		Required Frequency
1.	Pre-Surface Prep	100% visual on Pre- Surface
	Surface Preparation	100% on Surface Prep/Cleanliness
	Profile	Profile first item of each type per shift and every 20 items thereafter or other frequency as BUYER accepted in SELLER's procedures.
2.	Environmental Air Quality	At the start of each work and every 4 hours thereafter or more often during changing conditions.
3.	Recirculated Abrasive	At the start of work and every 4 hours thereafter

4.	Thickness Per SSPC PA2	On large items five (5) spot reading per 100 sq.ft. On items < 100 sq.ft. four (4) spot readings On items less than 4" (valves, fittings, components, etc) two (2) spot readings, For repair spots < 6 sq. inches and > 1 sq. inch. Two (2) spot readings For repair spots < 1 sq. inch one (1) spot reading For small chips/nicks/scratches and pinhole size repair spots need only a visual. For complex surfaces such as structural steel (steel beams) the frequency of dry film thickness readings shall be in accordance with SSPC-PA2 Appendix 3 section A3.4.1 excluding any readings on the flange toes. In accordance with figure A.3 "The Surface of a Steel Beam" the following locations are acceptable for the test readings- 1, 3, 4, 5, 7, 9, 10 and 11; and the following locations are excluded from test readings- 2, 6, 8, 12. For beams less than 20'-0" two (2) sets of 8 spot readings shall be taken. For beams 20'-0" thru 60'-0" three (3) sets of 8 spot readings shall be taken.
5.	Visual on Applied Coating.	100% of all items

8.2 Surface Preparation Inspection

8.2.1 Verify environmental conditions and compressed air quality (refer to Section 7.3.2, 8.1.6).

8.2.2 Verify recirculated grit is grease and oil free (refer to Section 7.3.7).

8.2.3 Verify surface cleanliness and profile (refer to Sections 7.3.5, 7.3.6 and 8.1.9).

8.2.4 Grease free chalk shall be used to mark local areas, which do not meet the specified requirements (e.g., soapstone and crayons are not acceptable).

8.3 Coating Application

8.3.1 Environmental conditions and compressed air quality shall be verified per Sections 7.3.2, 7.4.4, 8.1.6 and 8.1.9.

8.3.2 Dry coating thickness (DFT) shall be measured with a magnetic film thickness gage such as an Elektro-Physik "Mikrotest" or Positector 2000, Positector 6000 or BUYER authorized equal in accordance with SSPC PA2. The number and location of dry film thickness readings shall be in accordance with section 8.1.9.4.

8.3.2.1 The gage shall have an appropriate range that is suitable to measure the thickness expected and record calibration accuracy in accordance with SSPC PA 2 at the start of work, against certified coating thickness calibration standards for non-magnetic coating of steel, traceable to NIST or BUYER authorized alternative

standards. The calibration standards shall be in date, and 1.5 mil to 20.0 mil range, unless otherwise specified.

8.3.3 Any surface with a measured thickness outside of the limits described in Section 7.4.8 shall be rejected. These areas shall be reworked or re-cleaned and re-coated at the SELLER's expense. The average of the required number of readings shall be within the specified dry film thickness range. Any of the required spot readings may be as low as 80% of the minimum specified or 120% of the maximum specified as long as the average of all the readings is within the specified range. An individual spot reading that conforms to this criteria conforms to the specified dry film thickness.

9 Storage, Handling and Shipping

9.1 Coating Materials

9.1.1 Coating materials shall not be stored in direct sunlight or exposed to inclement weather (e.g. rain, snow, sleet, freezing rain, dew point condensation, see also Section 9.1.5). Materials shall remain under cover until ready to use.

9.1.3 Coating material shall be delivered in manufacturer's original unopened containers. Each container shall be clearly identified with the manufacturer's name, product designation, batch number, date of manufacture and shelf life expiration date.

9.1.4 The maximum shelf life allowed for coating materials used on the WTP project is 24 months from the date of their manufacture. Coating materials that are older than 24 months or that exceed the manufacturer's published shelf life, if less than 24 months, shall not be used and shall be placed on HOLD and segregated from other coating materials. A one-time shelf life extension of no less than three (3) months and no more than six (6) months, may be issued by the coating manufacturer. The shelf life extension shall be based on laboratory testing of retain samples taken at the time of manufacture or by testing a sample provided from the actual coating material in question. Where testing verifies an outdated coating material still complies with its original design criteria, it is acceptable for shelf life extension. Expiration date stickers, provided by the coating manufacturer, shall be affixed to each container prior to release from HOLD. The stickers shall include the product number, batch/lot number, the new expiration date and suitably marked to indicate that they came from the coating manufacturer. A new Appendix F shall be provided by the coating manufacturer that includes the test results and specifically indicates it was provided to document shelf life extension including new expiration date. Coating materials that have not been stored or handled in accordance with Sections 9.1.5, 9.1.6, 9.1.7 and 9.1.8, may not have their shelf life extended.

9.1.5 Coating material shall be protected from moisture, direct sunlight and temperatures below 40°F or above 100°F unless otherwise allowed by the coating manufacturer's latest published instructions and verified by the BUYER.

9.1.6 Coating material containers where the airtight seal has been broken or any of the contents are lost, shall not be used and shall be clearly marked and segregated from useable coating material.

9.1.7 Coating material containers shall not be opened except for immediate use.

9.1.8 Unused material shall be returned to storage as soon as possible at the end of each workday. Materials left out for more than eight (8) hours in an uncontrolled storage area (areas without environmental controls that are exposed to ambient weather) shall not be used and shall be clearly marked and segregated from useable coating material.

9.1.9 All required coating material certifications (Appendix F forms) for each batch of material delivered to the SELLER shall be available at the time of material receipt. Materials delivered to the shop without the required documentation shall not be used and the SELLER shall tag and place discrepant materials into a hold area clearly separated from acceptable material. Once required documentation is received or otherwise corrected and found to be acceptable, the discrepant material may then be taken off hold status and used.

9.2 Steel Items and Equipment

9.2.1 The SELLER shall be solely responsible for the condition of the steel items and equipment from the time they are received until they have been delivered to the BUYER.

9.2.2 All booms, hooks, clamps, forks, supports, and skids used in handling or storing coated items shall be designed and maintained in such a manner as to prevent any damage to the items or to the coating and shall be reviewed by the BUYER's representative. Chains and wire rope in direct contact with the coated items are not acceptable. Fabric lifting and tie down straps shall be used.

9.2.3 The SELLER shall inspect all items upon receipt for shipping and handling damage. Any visible damage observed at this point shall be noted on the receipt inspection report.

9.2.4 All coated steel items and equipment shall be stored on padded supports as necessary to preclude damage to the coating. The supports shall be properly spaced and leveled.

9.2.5 The BUYER's representative will have authority to stop any storage or handling activity, if there is a possibility of damage to the coating.

9.2.6 All steel items and equipment damaged by the SELLER shall be repaired in accordance with the specification at the SELLER's expense. Only repair procedures reviewed by the BUYER shall be used.

10 Documentation

10.1 The SELLER shall provide a record of all materials used (related to individual batch number- refer to Appendix F).

10.2 The SELLER shall provide a record of all required daily inspections (Example- Appendix G) that includes pre-surface preparation, compressed air cleanliness, environmental conditions, surface preparation and roughness, location of field repairs coated, application, visual inspection, dry film thickness, holiday testing and all touch-up/repair. This record shall include the coating and thinner materials used and the ID of the items coated to provide traceability.

10.3 All quality documentation shall be available for review by the BUYER representative within 24 hours from the time it is generated.

10.4 SELLER documentation forms or the way that the actual work will be documented shall be provided by the SELLER as part of the procedures submittal for review by the BUYER.

10.5 Documentation shall be submitted in accordance with the requirements listed in Section 3 of the Material Requisition (MR).

Appendix C of Attachment B
Materials/Coating Systems

TABLE 1 - PREQUALIFIED COATING PRODUCTS

Coating Number	Generic Products	Dry Film Thickness (mils)	Ameron	Carboline	Devoe	Dudick	Inter-national	Sherwin Williams
P02	Organic Zinc Epoxy Primer	3.0-5.0	Amercoat 68HS	Carbozinc 859	313	None	Interzinc 52	Zinc Clad IV
P04	High Build Epoxy	4.0-6.0	Amercoat 385	Carboguard 890	224HS	Protecto-Coat 330 or 300	Intergard 475HS	Macropoxy 646

NOTES to Table 1, Appendix C:

1) All versions of the above coating materials shall comply the WTP project VOC requirements of 3.8 lbs./gal and shall also comply with more restrictive local VOC requirements where the work is being performed. In the event the listed coating materials or acceptable versions of the listed coating materials do not meet the local VOC requirements an alternate VOC compliant material may be submitted for review.

TABLE 2 – COATING SYSTEM CODES

SYSTEM CODE	D
COAT 1	P02
COAT 2	P04
COAT 3	P04
COAT 4	

NOTES to Table 2, Appendix C:

1) The surface preparation for all coating systems shall be SSPC SP10 Near White Blast with a surface profile of 1.5 to 3.0 mils unless otherwise noted in this specification or the material requisition.

*1a) System Code D shall be used for all carbon steel and cast ductile iron surfaces, including the mounting frame (skid). Only the exterior of the housing shall be coated. All stainless steel surfaces shall remain uncoated.

*1b) For shipment and storage, blow into the housing a sufficient quantity of Cortec 307 Powder needed for the housing volume, followed by sealing the housing with steel blind flanges (six-bolt pattern, with rubber gasket) to reduce corrosion in the housing interior. An alternate vapor inhibitor product may be submitted to BUYER for review and acceptance.

Appendix D of Attachment B Coating Schedule

No.	Item – Component	System Code (Note 1)	Surface Prep. SSPC		1st Coat	DFT in mils	2nd Coat	DFT in mils	3rd Coat	DFT in mils	Color
			Initial	Repair							
8.20	Miscellaneous Mechanical Equipment-Interior	D	SP10	SP11	P02	3.0-5.0	P04	4.0-6.0	P04	4.0-6.0	ANSI 70 Gray

Notes to APPENDIX D

5. Flange surface (except gasket surfaces) & boltholes shall be cleaned and coated the same as the adjacent component.
8. Individual components of skid-mounted units shall be coated as noted for each individual item listed in Appendix D.
9. Complete details of the Manufacturer's Standard coating system shall be submitted for review. Refer to Section 6.2.

Appendix E is not applicable to this specification.

Appendix F of Attachment B
Coating Manufacturer's Product Identity Certification Record

Project Name: _____ Coating Manufacturer: _____
Project Number: _____ Purchase Order Number: _____
Project Location: _____ Contract Number: _____
Coating Applicator: _____ Generic Coating Type: _____
Product Name: _____ Product Number: _____

(For multi-component products, provide data for all components on one or more Appendix F forms).
(Provide the standard range and actual batch values for each test)

TEST RESULTS		Component A Batch No.		Component B Batch No.	
Test	**Test Method Used**	**Standard Range**	**Batch Actual**	**Standard Range**	**Batch Actual**
Weight per Gallon					
Viscosity					
Flash Point (Typical)					
% Solids by Volume (Typical)					
Cure to recoat time @ 50F, 70F, & 90F (typical)					
Batch Size					
Date of Mfg.					
Shelf Life					
Expiration Date					

COMMENTS:

I hereby certify that the coating materials described above were manufactured with the same formulation, raw materials, production methods, and quality control standards as the coating materials originally tested and/or accepted for use at the River Protection Project-Waste Treatment Plant (WTP) Project site, located in the 200 East Area of the Hanford Site in Washington State in accordance with the requirements of WTP specification 24590-WTP-3PS-AFPS-T0001, 24590-WTP-3PS-AFPS-T0003,24590-WTP-3PS-AFPS-T0004, 24590-WTP-3PS-AFPS-T0006 and 24590-WTP-3PS-PX04-T0004.

Signed: _____ Date: _____
Title: _____ Company: _____

Appendix G of Attachment B
Surface Preparation and Coating Inspection Form

Page __ of ___

REPORT NO:_____ DATE: _____
PROJECT:_____ DAY: M T W T F S S
SUBCONTRACTOR/SELLER:_____ SHIFT: _____
EQUIPMENT/AREA:_____ INSPECTOR: _____
SUBSTRATE: STEEL/CONCRETE/OTHER-_____ COATING SPEC NO/REV:_____
ENVIRONMENTAL CONDITIONS:

WORK ACTIVITY						
TIME						
DRY BULB TEMP. °F						
WET BULB TEMP. °F						
RH %						
DEW POINT °F						
SURFACE TEMP. °F						
BLOTTER TEST						

PRE-SURFACE PREPARATION:
SP-1:_____ MASKING/PROTECTION:_____ SURFACE DEFECTS:_____

SURFACE PREPARATION:
METHOD:_____ ABRASIVE TYPE/SIZE/STORAGE:_____
CLEANLINESS SPEC:_____ ACTUAL:_____PROFILE SPEC:_____ ACTUAL:_____
EQUIPMENT:_____

COATING MATERIALS & MIXING:
PRODUCT(S)_____
BATCH NO(S)/QUANTITIES/EXPIRATION DATE:_____
THINNERS/THINNING RATIO:_____
STORAGE:_____ MIXING: _____ INDUCTION TIME:_____
MATERIAL TEMPERATURE:_____ POT LIFE EXPIRATION TIME:_____
COATING/LINING APPLICATION START TIME:_____ FINISH TIME:_____
COAT: PRIMER/PRIMER T.U./SECOND/SECOND T.U./THIRD/THIRD T.U./OTHER
METHOD:_____ WFT:_____ RECOAT TIME/TEMP:_____ CURE TIME/TEMP:_____
EQUIPMENT:_____

APPLIED COATING:
VISUAL INSPECTION (FILM IMPERFECTIONS):_____
DRY FILM THICKNESS: SPEC:_____ ACTUAL:_____ METHOD:_____
HOLIDAY TEST:_____ METHOD:_____ OTHER TESTING:_____ METHOD:_____
TOUCH-UP AND REPAIR:_____ FINAL CURE:_____

COMMENTS: (*Use reverse side or attach extra pages*)

_____
INSPECTOR'S SIGNATURE/DATE

Appendix H of Attachment B
Manufacturer's Standard Coating Data Sheet

The SELLER proposes the following Manufacturer's Standard (Mfg. Std.) or alternate coating system that is suitable for the exposure conditions of steel items and equipment in radiation and non-radiation areas.

1. ^**Equipment Description:** _____
   A. Tag Number_____
   B. Part(s) i.e. skirt, shell, channels, lugs, etc.* _____
   C. Design/Operating Temperatures, designate °F or °C .... _____ °F _____ °C
   D. Does Equipment Receive Steam out (Yes/No), Temperature _____ °F _____ °C
   E. Insulated/Uninsulated _____
   F. Fireproofing (Yes/No) _____
   ^G. Carbon Steel (CS), Stainless Steel (SS), other (List) _____
2. ^**Seller:** _____
3. ^**Surface Preparation:** SSPC No./Profile _____
4. **Coating System Designation:** (Code)

	First Coat	Second Coat	Third Coat
^A. Type of Coating.....	_____	_____	_____
^B. Coating Mfg./No.**	_____	_____	_____
^C. Dry Film Thickness (Min/Max in mils)/(µm) ...	_____	_____	_____
D. Wet/Film Thickness (Min/Max in mils)/(µm)	_____	_____	_____
E. Curing Method.....	_____	_____	_____
^F. Color.....	_____	_____	_____
G. Dry to Recoat	_____	_____	_____
H. Pot Life	_____	_____	_____
L. Thinner / %	_____	_____	_____

5. **Total DFT of System:** (Mils/µm)(Min/Max)..... _____ / _____ Min. _____ / _____ Max.
6. **Material Storage:** Temperature Requirements (Min/Max) _____ / _____
7. **Shelf Life:** _____ Months
8. **Application Environmental Limits:**
   A. Temperature Ambient and Surface (Min/Max)..... _____ / _____ _____ / _____
   B. Humidity (Min/Max) ..... _____ / _____
   C. Surface Temp ≥5°F above Dew Point temp. (Yes/No)..... _____
9. **Protection of surfaces that will be inaccessible after equipment installation (such as underside of base plates, interior of fans, vessels or equipment housings)** _____
10. **Rust Preventative for machined faces:** (**Mfg./No.) _____
11. **Quantity of touch-up coating supplied:** *None*
12. **Additional information:** (attach extra page as necessary) _____

* Use additional copies of this form for each part described in 1 above that requires a different coating system. A completed copy of this data sheet shall be submitted to CONTRACTOR/BUYER with the initial vendor data submittal.

** Include manufacturer's technical data sheets and MSDS for each proposed coating & preservative.

^ Mandatory data entry. Other entries should be completed where information is available from sub vendor or from coating material technical data sheets.

ISSUED BY
RPP-WTP PDC

R11204284

CENTRIFUGAL MULTI-STAGE BLOWER
Data Sheet:
24590-HLW-MAD-HOP-00018

MR No. 24590-QL-MRA-MACS-00004

Plant Item No. 24590-HLW-MA-HOP-FAN-00001A/B/C 24590-HLW-MA-HOP-FAN-00009A/B/C

Rev. No. 9

1	Project:	RPP-WTP	Bldg./Room #	HLW / H-B001C	Manufacturer	*	
2	Project No:	24590	Supporting Calculations	24590-HLW-M4C-HOP-00011	Manufacturer Part No	*	
3	Site:	DOE Hanford					
4	Safety Class	SS	Supporting Drawings	24590-HLW-M6-HOP-00003 24590-HLW-M6-HOP-20003	Quantity Required	6	
5	Seismic Category (Note 26)	SC-III					
6	SSC Characteristic	Air Permit	System Description	24590-HLW-3YD-HOP-00001	Quality Level	Q	
7	System No.	HOP					
8	Description: HLW Booster Extraction Fans - Note 15						
9	**DESIGN CONDITIONS**						
10	Indoor Design Temperature	Minimum 59 °F	Maximum 83 °F	Relative Humidity	10% (min)		
11	Contamination Classification Area	C2		Elevation	661 ft above MSL		
12	Environmental Qualification	(See Attachment 2)	Hanford Standard Atmospheric Pressure		398	inches WC	
13	**DESIGN OPERATING CONDITIONS**						
14	Design Blower Capacity (Note 23)	1600	ACFM	Inlet Air Temperature at Design Conditions	160	°F	
15	Design Static Pressure (Note 12)	85	inches WC	Inlet Air Density at Design Conditions	0.0471	lbs/ft³	
16	Minimum Blower Efficiency at Design Conditions	60	%	Inlet Pressure at Design Conditions	11.3	psia	
17	Blower Efficiency at Design Conditions	*	%	Power at Design Conditions	*	BHP	
18	Blower Speed at Design Conditions (Note 24)	*	RPM	Equipment Design Temperature (Note 21)	*	°F	
19	Max. Discharge Temp. at Design conditions	*	°F	Critical Speeds (Note 20)	*	RPM	
20	**CONSTRUCTION**						
21	Blower Manufacturer	*		Blower Model Number	*		
22	AMCA Drive Arrangement	7		AMCA Inlet Box Position	360		
23	AMCA Motor Position	Direct Drive		AMCA Discharge	CW 360		
24	AMCA Rotation (Note 9)	CW		Blower Scroll Type	*		
25	Blower Motor Operating Weight	*	pounds	Assembly Weight (Mtr+ Blower + Base)	*	pounds	
26	Overall Skid Dimensions (Note 5)	Width *		Height *	Length *	inches	
27	Blower Bearing Type	Roller- Grease Lubricated		Blower Bearing Mfg. *	Bearing Part #	*	
28	Lubricant Mfg. *	Part # *		Bearing Special Features (Notes 18 & 19)	L10 Life 100 khr		
29	Mechanical Coupling Mfg. *	Part # *					
30	**BLOWER WHEEL**						
31	Blower Wheel Type (Note 4)	*		Blower Shaft Diameter	*		
32	Design Wheel Diameter	*		Actual Wheel Diameter	*		
33	Design Wheel Width	*		Actual Wheel Width	*		
34	Design Blower RPM	*		Actual Blower RPM	*		
35	Design Brake Horsepower	*		Actual Brake Horsepower	*		
36	**BLOWER MATERIALS**						
37	Housing (Note 14 & 27)	Cast Ductile Iron	Grade *	Blower Wheel	Stainless Steel	Grade	*
38		N/A	Grade N/A	Mounting Frame	Carbon Steel	Grade	*
39	Shaft	Stainless Steel	Grade *	Inlet Box / Transition Piece	Cast Ductile Iron	Grade	*
40	Inlet Vane	N/A	Grade N/A	Discharge Damper	N/A	Grade	N/A
41	Inlet Screen	N/A	Grade N/A	OSHA Compatible Safety Guards	Carbon Steel	Grade	*
42	**BLOWER ACCESSORIES**						
43	Flanged Inlet	Yes		Flanged Inlet Dimensions	*		
44	Flanged Discharge	Yes		Flanged Discharge Dimensions	*		
45	Flanged Discharge Evase	No		Flanged Discharge Evase Dimensions	N/A		
46	Split Housing	No		Split Housing Type	N/A		
47	Inlet Box	No		Inlet Box Type	N/A		
48	Inlet Damper	No		Inlet Damper Type	N/A		
49	Inlet Transition Piece	No		Inlet Transition Piece Flange Dimensions	N/A		
50	Inspection Door (Note 7)	Yes		Inspection Door Size (Note 7)	1" NPT		
51	Drain Connection (Note 7)	Yes		Drain Connection Size (Note 7)	1" NPT		
52	Shaft Seals	Yes		Seal Type	Double Carbon Ring w/ purge		
53	Isolation Base	No		Isolation Base Type	N/A		
54				Isolation Base Manufacturer	N/A		
55	Isolation Springs	No		Isolation Springs Mfr and Model No	N/A		
56				Isolation Springs Minimum Diameter	N/A		
57				Isolation Springs Deflection	N/A		
58				Isolation Springs Restraint Features	N/A		
59	Flexible Connection Inlet (Note 6 & 25)	Yes		Insulation (Note 22)	Yes		
60	Flexible Connection Inlet Type	Braided SSTL flexible hose					
61	Flexible Inlet Connection Material	316L SS		braid constructed with 304 SST			
62	Flexible Connection Manufacturer and Model No	*					
63	Flexible Connection Outlet (Note 6 & 25)	Yes					
64	Flexible Connection Outlet Type	Braided SSTL flexible hose					
65	Flexible Outlet Connection Material	316L SS		braid constructed with 304 SST			
66	Flexible Connection Manufacturer and Model No	*					

CENTRIFUGAL MULTI-STAGE BLOWER
Data Sheet:
24590-HLW-MAD-HOP-00018

				MR No. 24590-QL-MRA-MACS-00004		
				Plant Item No. 24590-HLW-MA-HOP-FAN-00001A/B/C 24590-HLW-MA-HOP-FAN-00009A/B/C		Rev. No. 9
1	Project:	RPP-WTP	Bldg./Room #	HLW / H-B001C	Manufacturer	*
2	Project No:	24590	Supporting Calculations	24590-HLW-M4C-HOP-00011	Manufacturer Part No	*
3	Site:	DOE Hanford				
4	Safety Class	SS	Supporting Drawings	24590-HLW-M6-HOP-00003 24590-HLW-M6-HOP-20003	Quantity Required	6
5	Seismic Category (Note 26)	SC-III				
6	SSC Characteristic	Air Permit	System Description	24590-HLW-3YD-HOP-00001	Quality Level	Q
7	System No.	HOP				
8	Description: **HLW Booster Extraction Fans - Note 15**					
9	Inlet Screen	No				
10	Inlet Screen Features	N/A				
11	Blower Pedestal	Yes				
12	Blower Pedestal Description	**Common mounting base for Blower, motor, and bearings**				
13	Insulation Studs	No				
14	Silencer	No				

15 **MOTOR AND DRIVE REQUIREMENTS**

16 Driven Equipment / Motor / ASD relationship is as follows::

	Blower Tag Number	Motor Tag Number	ASD Tag Number
17			
18	HOP-FAN-00001A	HOP-MTR-00005A	HOP-ASD-00001A
19	HOP-FAN-00001B	HOP-MTR-00005B	HOP-ASD-00001B
20	HOP-FAN-00001C	HOP-MTR-00005C	HOP-ASD-00001C
21	HOP-FAN-00009A	HOP-MTR-00006A	HOP-ASD-00003A
22	HOP-FAN-00009B	HOP-MTR-00006B	HOP-ASD-00003B
23	HOP-FAN-00009C	HOP-MTR-00006C	HOP-ASD-00003C

24	Adjustable Speed Drive	Yes	Provided by others.
25	Special Drive Features	**1. ASD to operate motor from 30% to 100% of required RPM within a 30 second time frame (max)**	
26		**2. Provides ASD programming for motor RPM to pass through any critical speed dead bands to avoid excessive vibration.**	

27 GAS COMPOSITION

	Component	kg/hr	wt%
28			
29	N_2	2138	6.73E+01
30	O_2	655.2	2.06E+01
31	H_2O	324.6	1.02E+01
32	Ar	36.5	1.15E+00
33	CO_2	20.5	6.46E-01
34	NO	5.79E-01	1.82E-02
35	Hg	1.25E-01	3.94E-03
36	NO_2	9.66E-02	3.04E-03
37	CO	1.70E-02	5.35E-04
38	N_2O	1.25E-02	3.94E-04
39	SO_2	6.70E-03	2.11E-04
40	HCl	6.58E-03	2.07E-04
41	NH_3	4.37E-03	1.38E-04
42	HF	3.99E-03	1.26E-04
43	H_2	3.53E-03	1.11E-04
44	VOC	2.76E-03	8.69E-05
45	I_2	1.11E-03	3.50E-05
46	Particulate	4.34E-11	1.37E-12
55	Total	3175.66	100

56

57 **Source: 24590-HLW-M4E-HOP-00001 pages 14-16 row 35**

58

59 **Notes**

60 1) * Denotes data to be provided / verified by vendor.
61 2) N/A denotes "Not Applicable".
62 3) TBD denotes "To Be Determined".
63 4) The impeller shall be anti-surge design developing continuously rising SP from free delivery thru shutoff.
64 5) Bounding dimensions not to exceed 68" W x 60" H x 105" L (Blower, Motor and Baseplate).
65 6) Connections shall match Buyer's supply pipe: 10 inch diameter, 316L SS, Schedule 40S, w/ 150 lb. RF Flange.
66 7) See Specification 24590-WTP-3PS-MACS-T0005 Rev. 0, Section 3.8.2 for requirements.
67 8) Deleted
68 9) Rotation is listed as viewed from drive side.
69 10) Deleted
70 11) Deleted
71 12) The External Static Pressure at design operating condition includes 2 in. WC maximum drop through the inlet box.
72 The more conservative value of 85 inches WC was used rather than the minimum value 81 inches WC in 24590-HLW-M4C-HOP-00011 Rev. 1.
73 13) Deleted
74 14) Blower housing design pressure shall be -6 psi (-166 in WC).
75 15) Contents of this document are Dangerous Waste Permit affecting.
76 16) Deleted
77 17) Deleted
78 18) Provide each blower bearing with RTDs & 2 - directional (X and Y) vibration sensors for remote indication
79 19) Radial type roller bearings shall have labyrinth type seal.

CENTRIFUGAL MULTI-STAGE BLOWER
Data Sheet:
24590-HLW-MAD-HOP-00018

MR No.
24590-QL-MRA-MACS-00004

Plant Item No.
24590-HLW-MA-HOP-FAN-00001A/B/C
24590-HLW-MA-HOP-FAN-00009A/B/C

Rev. No
9

1	Project:	RPP-WTP	Bldg./Room #	HLW / H-B001C	Manufacturer	*	
2	Project No:	24590	Supporting Calculations		Manufacturer	*	
3	Site:	DOE Hanford		24590-HLW-M4C-HOP-00011	Part No		
4	Safety Class	SS	Supporting Drawings	24590-HLW-M6-HOP-00003	Quantity	6	
5	Seismic Category (Note 26)	SC-III		24590-HLW-M6-HOP-20003	Required		
6	SSC Characteristic	Air Permit	System Description	24590-HLW-3YD-HOP-00001	Quality Level	Q	
7	System No.	HOP					

8 Description: **HLW Booster Extraction Fans - Note 15**

9 20) Critical speeds within operating ranges to be blocked in ASD programming

10 21) This temperature is required for material selection and corrosion analysis. The value is the average temperature of the inlet temperature in line 14 of page 1 and the Discharge Temperature on Line 19 of page 1.

11 22) Blowers shall be insulated (except bearing housings) by Buyer and heat traced to maintain casing metal temperature above the acid dewpoint of the process gas.

12 23) Design blower capacity is the predicted capacity from calculation, 24590-HLW-M4C-HOP-00011 Rev 1 page A-10 cell Y-32 divided by 2 (two blower running at capacity) plus a 30 % contingency. 2461 ACFM/2*1.3 = 1600 ACFM

13 24) Shaft speed shall not exceed 3600 rpm unless approved by Buyer. Tip speed of rotating assembly shall not exceed 530 fps unless approved by Buyer.

14 25) See Specification 24590-WTP-3PS-MACS-T0005 rev. 0, section 3.8.1.6 for flexible connection requirements.

15 26) See Specification 24590-WTP-3PS-MACS-T0005 rev. 0, section 6.3 for seismic testing requirements.

16 27) Housing will be fabricated from ductile iron or high chromium cast iron (or better).

17

18

19 **SAFETY SCREENING** _X_ Yes ___ No

20 **Safety Screening / Evaluation Required? If yes per 24590-WTP-GPP-SREG-002, E&NS Signature required below.**

21

22

23

24

25

26

27

28

29

30

31

32

33

34

9	**Revised to incorporate new specification 24590-WTP-3PS-MACS-T0005, Rev. 0 to remove ASME AG-1 requirements. Other minor clarifications are as noted with revision bars. This data sheet is issued for quote.**	M.O.	M. Summers	C. Meng	AM	[illegible]	R. E. Stevens	5/12/10
8	Reissued for Purchase. Minor Change (Inclusion of pages 5 & 6 which were omitted in Rev. 7).	M. O'Neill	M. Summers	C. Meng	D.Lamberd	S. Kretzschmar	R. E. Stevens	7/22/2009
	Reissued for purchase. Minor revisions to format for clarity. Revised the Material Requisition number from 24590-QL-MRA-MACS-00002 to the new 24590-QL-MRA-MACS-00004. Corrected tag numbers and updated revision number. Changed title to Centrifugal Multi-stage Blowers. Removed reference to cancelled calculation 25490-HLW-MAC-HOP-00001. Added field for SSC Characteristic.							

	CENTRIFUGAL MULTI-STAGE BLOWER **Data Sheet:** **24590-HLW-MAD-HOP-00018**			MR No. **24590-QL-MRA-MACS-00004**			
				Plant Item No. **24590-HLW-MA-HOP-FAN-00001A/B/C** **24590-HLW-MA-HOP-FAN-00009A/B/C**			Rev. No. 9
1	Project:	RPP-WTP	Bldg./Room #	HLW / H-B001C	Manufacturer	*	
2	Project No:	24590	Supporting Calculations	24590-HLW-M4C-HOP-00011	Manufacturer Part No	*	
3	Site:	DOE Hanford					
4	Safety Class	SS	Supporting Drawings	24590-HLW-M6-HOP-00003 24590-HLW-M6-HOP-20003	Quantity Required	6	
5	Seismic Category (Note 26)	**SC-III**					
6	SSC Characteristic	**Air Permit**	System Description	24590-HLW-3YD-HOP-00001	Quality Level	Q	
7	System No.	**HOP**					
8	Description: **HLW Booster Extraction Fans - Note 15**						

Rev	Reason for Revision	System Engineer	Responsible Engineer	E&NS	Checker	Reviewer	Approver	Date
7	Added reference to Note 15. Updated design inlet conditions, capacity, and external static pressure to align with 24590-HLW-M4C-HOP-00011 Rev.1 ECCN 24590-HLW-M4E-HOP-00001. Added field for Inlet Pressure at Design Conditions in place of Total Static Pressure (Max) field. Added field for required minimum efficiency at design conditions per CCN 199933. Retitled field for Maximum Discharge Temperature and deleted Note 16. Retitled field from Natural Frequencies to Critical Speeds for clarity. Removed normal and minimum design conditions for clarity. Revised AMCA Drive Arrangement from 8 to 7 to align with industry offering. Specified inlet box position to 360. Relocated Blower Motor Operating Weight and Assembly Weight fields and ad Specified Roller grease lubricated bearings, added fields for Mfg. and Part # for bearing, lubricant, and couple+B121r. Changed coupler to vendor specified. Revised specified materials for housing, shaft, blower wheel, mounting frame, and inlet box/transistion piece to align with industry offering. Material grades to be specified by vendor. Revised inspection door size and drain from vendor specified to 1"NPT per specification, 24590-WTP-3PS-MACS-T0004 Rev. 5. Revised Split Housing, Inlet Box, & Inlet Transition Piece fields to No. Specified seal type as Double Carbon Ring w/ purge. Added Note 1 to Special Drive Features field. Added Gas Composition and Acid Dew Point. Deleted Notes 8, 10, 13, 16, 17, and revised Notes 7.12, 14, 18, 19, 20, 21, & 22 Added Notes 23, 24, 25, and 26 Change Nuclear Radiation field on motor data sheet to agree with EQD. Revised Design Life on EQD from 5 years to 40 years. Added Note in Additional DBE information field to clarify equipment is not expected to operate submerged.	M. O'Neill	S. E. Anderson	C. Meng	A. Moretta	S. Kretzschmar	R. E. Stevens	6/11/2009
6	Reissued for purchase. Addition of insulation requirement. Incorporation of Vendor exceptions and clarifications.	M. O'Neill	S. E. Anderson	C. Meng	C. Knauss	S. Kretzschmar	R. E. Stevens	9/29/2008
5	Re-issued with updated design conditions, reformatted mechanical datasheet for clarity, attached motor and EQ datasheets. This document supersedes 24590-HLW-MUD-HOP-00001	M. O'Neill	S. E. Anderson	C. Meng	C. Knauss	S. Kretzschmar	R. E. Stevens	3/26/2008
4	Re-issued for purchase, added Note 14, and updated design conditions.	Y. Nurdogan	G. Dunn	C. Meng	D. Reinemann	J. Rouse	J. Julyk	3/21/2007
3	Re-issued for purchase	J.Rewari	N/A	N/A	R. Tometczak	N/A	E. Isern	3/7/2005
2	Re-issued for purchase	J. Rewari	N/A	N/A	R. Tometczak	N/A	E. Isern	12/13/2004
1	Updated design conditions and re-issued for purchase, superseded 24590-HLW-MAD-HOP-00019, 00020, 00035, 00036, and 00037.	J. Rewari	N/A	N/A	J. Medina	N/A	E. Isern	8/12/2004
0	Issued for purchase	D. Green	N/A	N/A	M. Ordona	N/A	H. Jalali	11/17/2003

ATTACHMENT 1 24590-HLW-MAD-HOP-00018 ELECTRICAL DATA SHEET LOW VOLTAGE INDUCTION MOTOR	MR No. 24590-QL-MRA-MACS-00004	
	Plant Item No. 24590-HLW-EM-HOP-MTR-00005A/B/C 24590-HLW-EM-HOP-MTR-00006A/B/C	Rev No. 9

Motor Tag No.: 24590-HLW-EM-HOP-MTR-00005A/B/C and 24590-HLW-EM-HOP-MTR-00006A/B/C

Driven Equipment No.: 24590-HLW-MA-HOP-FAN-00001A/B/C and 24590-HLW-MA-HOP-FAN-00009A/B/C

Service: HLW Booster Extraction Fans

Refer to "Primary Specification": 24590-WTP-3PS-MACS-T0005

LINE NO.	DESCRIPTION	USER SPECIFIED	SUPPLIER FURNISHED	UNITS
	BASIC DATA:			
1	RATED HORSEPOWER	-	*	HP
2	SYNCHRONOUS SPEED	-	*	RPM
3	VOLTAGE	460	*	V
4	PHASE	3	*	-
5	FREQUENCY	60	*	Hz
6	INSULATION CLASS	F	*	-
7	TEMPERATURE RISE ABOVE 40°C AMBIENT	80	*	deg. C
8	NEMA DESIGN TYPE (B, C, OTHER)	B	*	-
9	EFFICIENCY (STANDARD, PREMIUM)	PREMIUM	*	-
10	ENCLOSURE TYPE (TEFC - SEVERE DUTY PER IEEE Std. 841, TENV, WP1I)	TEFC IEEE Std. 841	*	-
11	SERVICE FACTOR	1.15	*	-
12	COUPLED DRIVE (DIRECT, BELT, GEAR)	Direct	*	-
13	BEARING (ANTI-FRICTION, SLEEVE)	Anti-Friction	*	-
14	BEARING SEAL (ONE END, BOTH ENDS)	Both Ends	*	-
15	SPACE HEATER (FOR MOTORS > 20 HP)	Yes	*	W
16	RTD FOR SLEEVE BEARING : 1 per bearing for Belt drive only	N/A	*	Ω
17	TERMINAL BOX LOCATION		*	-
18	WARRANTY (2 YEARS, 3 YEARS, 5 YEARS)	**see Terms and condition**	*	-
19	SHOP TESTS			
	- MFR STANDARD TEST (Yes / No)	Yes	*	
	- ROUTINE TEST (Yes / No)	Yes	*	
	- FULL TEST (Yes / No)	No	*	
20	UNUSUAL SERVICE CONDITIONS:	Inverter Duty		
21	FLAMMABLE OR EXPLOSIVE GASES	No	*	
22	COMBUSTIBLE, EXPLOSIVE, ABRASIVE OR CONDUCTIVE DUST	No	*	
23	WET OR DRY OPERATING CONDITIONS	Dry	*	
24	NUCLEAR RADIATION	0.5 mrad/hr.		
25	SPECIAL PAINTING REQUIREMENTS PER IEEE Std. 841	(Note 5)	*	
26	OTHER (SC,SS, APC, Non-ITS)	SS	*	
27	OTHER (SEISMIC CATEGORY I , II, III or IV)	SC-III	*	

ATTACHMENT 1 24590-HLW-MAD-HOP-00018 ELECTRICAL DATA SHEET LOW VOLTAGE INDUCTION MOTOR	MR No. 24590-QL-MRA-MACS-00004	
	Plant Item No. 24590-HLW-EM-HOP-MTR-00005A/B/C 24590-HLW-EM-HOP-MTR-00006A/B/C	Rev No. 9

Motor Tag No.: 24590-HLW-EM-HOP-MTR-00005A/B/C and 24590-HLW-EM-HOP-MTR-00006A/B/C

Driven Equipment No.: 24590-HLW-MA-HOP-FAN-00001A/B/C and 24590-HLW-MA-HOP-FAN-00009A/B/C

Service: HLW Booster Extraction Fans

Refer to "Primary Specification": 24590-WTP-3PS-MACS-T0005

LINE NO.	DESCRIPTION	USER SPECIFIED	SUPPLIER FURNISHED	UNITS
28	MANUFACTURER	-	*	-
29	NEMA FRAME	-	*	-
30	MODEL NUMBER	-	*	-
31	SERIAL NUMBER / MANUFACTURER DATE	-	*	-
32				
33	FULL LOAD CURRENT	-	*	A
34	FULL LOAD TORQUE	-	*	ft-lb
35	POWER FACTOR : - @ 50 % LOAD	-	*	%
	- @ 75 % LOAD	-	*	%
	- @ 100 % LOAD	-	*	%
36	EFFICIENCY : - @ 50% LOAD	-	*	%
	- @ 75% LOAD	-	*	%
	- @ 100% LOAD	-	*	%
37	LOCKED ROTOR CURRENT @ 100 % of RATED VOLTAGE	-	*	A
38	LOCKED ROTOR CURRENT @ 80% of RATED VOLTAGE	-	*	A
39	ALLOWABLE STALL TIME @ FULL VOLTAGE	-	*	SEC
40	ALLOWABLE STALL TIME @ 80% of VOLTAGE	-	*	SEC
41	LOSSES @ FULL LOAD	-	*	W
42	ROTOR WK2 @ MOTOR SHAFT SPEED (For > 250 hp only)	-	*	lb-ft²
43	STARTING POWER FACTOR (For > 75 hp only)	-	*	-
44	SUB TRANSIENT REACTANCE AND X/R (For > 250 hp only)	-	*	-
45	WEIGHT	-	*	lbs
46	ROTATION (CW, CCW, BI-DIR.) FACING DRIVEN EQUIPMENT	-	*	-
47	MEAN TIME BETWEEN FAILURE (MOTOR 100 HP AND ABOVE)		*	
48	STARTING METHOD (FULL/REDUCED VOLTAGE, ASD APPLICATION)	ASD		-
49				
50	RECOMMENDED BEARING LUBRICANT	-	*	

NOTES:

(1) DELETED

(2) Motor should be applied within its rating based on service factor of 1.0.

(3) Data Sheet Line no. from 35 to 47 are applicable for motor 100 HP and above.

(4) The fan and motor are subjected to the same environmental conditions.

(5) See specifcation **24590-WTP-3PS-MACS-T0005, Attachment B**, for requirements.

EQUIPMENT QUALIFICATION DATASHEET (EQD)

Equipment Identification

Component Tag Number	24590-HLW-MA-HOP-FAN-00001A/B/C 24590-HLW-MA-HOP-FAN-00009A/B/C 24590-HLW-EM-HOP-MTR-00005A/B/C 24590-HLW-EM-HOP-MTR-00006A/B/C	Safety Classification	☐ SC ☒ SS ☐ APC ☐ SDC ☐ SDS ☐ RRC
Manufacturer / Supplier	Note 4		
Requisition Number	24590-QL-MRA-MACS-00004		
Model	Note 4	Seismic Category	☐ SC-I ☐ SC-II ☒ SC-III ☐ SC-IV
Description (include descriptive text [e.g., location, elevation])	HLW Booster Extraction Fans.		
Safety Function(s)	Provides negative pressure on HLW melters and primary off-gas system. In conjunction with Stack Extraction Fans, provides motive force for off-gas flow through all off-gas equipment up to and including discharge at stack.		

Seismic Safety Function	☒ Yes ☐ No	Room Number(s): H-B001C	
Maintenance Accessible	☒ Yes ☐ No	Method of Maintenance Access:	☐ Remote ☒ Hands On ☐ None
Seismic Operability Requirements:	☒ During Seismic Event	☒ After Seismic Event	
ITS Equipment Type:	☐ Passive Mechanical	☒ Active Mechanical	☒ Electrical

Equipment Environmental Qualification (EEQ)

Environment ☒ Mild ☐ Harsh Contamination Class: C2 Radiation Class: R2	Hi Rad Service ☐ Yes ☒ No	Design Life (yrs) ☒ 40 ☐ Other ____ with required maintenance

Parameter Type/Units	Parameter Value	Time Duration (number)	Time Units	WTP Document Number (BUYER)	Submittal Number (SELLER)
Normal					
Normal High Temperature (°F)	83	40	yr	24590-HLW-U0D-W16T-00001	Note 4
Normal Low Temperature (°F)	59	40	yr	24590-HLW-U0D-W16T-00001	Note 4
Normal High Relative Humidity (%RH)	100	40	yr	24590-HLW-U0D-W16T-00001	Note 4
Normal Low Relative Humidity (%RH)	10	40	yr	24590-HLW-U0D-W16T-00001	Note 4
Normal High Pressure (in.-w.g.)	0	40	yr	24590-HLW-U0D-W16T-00001	Note 4
Normal Low Pressure (in.-w.g.)	-0.1	40	yr	24590-HLW-U0D-W16T-00001	Note 4
Normal Radiation Dose Rate (mR/hr)	0.5	40	yr	24590-HLW-U0D-W16T-00001	Note 4
Vibration Magnitude (g)	N/A	40	yr	N/A	Note 4
Vibration Frequency (Hz)	N/A	40	yr	N/A	Note 4
Additional Normal Information:					

EQUIPMENT QUALIFICATION DATASHEET (EQD)

Equipment Environmental Qualification (EEQ) *(continued)*

Parameter Type/Units	Parameter Value	Time Duration (number)	Time units	WTP Document Number (BUYER)	Submittal Number (SELLER)
Abnormal					
Abnormal High Temperature (°F)	95	8	hr/yr	24590-HLW-U0D-W16T-00001	Note 4
Abnormal Low Temperature (°F)	59	8	hr/yr	24590-HLW-U0D-W16T-00001	Note 4
Abnormal High Relative Humidity (%RH)	95	8	hr/yr	24590-HLW-U0D-W16T-00001	Note 4
Abnormal Low Relative Humidity (%RH)	10	8	hr/yr	24590-HLW-U0D-W16T-00001	Note 4
Abnormal High Pressure (in.-w.g.)	4	8	hr/yr	24590-HLW-U0D-W16T-00001	Note 4
Abnormal Low Pressure (in.-w.g.)	-6.7	8	hr/yr	24590-HLW-U0D-W16T-00001	Note 4
Abnormal Radiation Dose Rate (mR/hr)	0.5	0	hr/yr	24590-HLW-U0D-W16T-00001	Note 4
Wet Sprinkler System Present	YES	2	hr/yr	24590-HLW-U0D-W16T-00001	Note 4
Additional Abnormal Information					
Design Basis Events (DBE)					
DBE High Temperature (°F)	95	1000	hr	24590-HLW-U0D-W16T-00001	Note 4
DBE Low Temperature (°F)	59	1000	hr	24590-HLW-U0D-W16T-00001	Note 4
DBE High Relative Humidity (%RH)	95	482	hr	24590-HLW-U0D-W16T-00001	Note 4
DBE Low Relative Humidity (%RH)	10	1000	hr	24590-HLW-U0D-W16T-00001	Note 4
DBE High Pressure (in.-w.g.)	4	1000	hr	24590-HLW-U0D-W16T-00001	Note 4
DBE Low Pressure (in.-w.g.)	-6.7	1000	hr	24590-HLW-U0D-W16T-00001	Note 4
DBE Radiation Dose Rate (mR/hr)	0.5	0	hr	24590-HLW-U0D-W16T-00001	Note 4
Flood Height (ft)	22	1000	hr	24590-HLW-U0D-W16T-00001	Note 4
Submergence (ft)	N/A**	N/A**	N/A	24590-HLW-U0D-W16T-00001	Note 4
Chemical/Spray Exposure	Yes	12.5	hr	24590-HLW-U0D-W16T-00001	Note 4
Additional DBE Information	Spray exposure is composed of water from fire suppression system. **Equipment is not expected to operate submerged or after a DBE flood event				

EQUIPMENT QUALIFICATION DATASHEET (EQD)

DBE Chemical Exposure Details	
DBE Chemical Types/Concentrations	NONE

Interfaces (Electrical)	
Power Supply Voltage (VAC, VDC)	460 VAC
Power Supply Frequency (Hz)	60
Power Connection Method	Note 3
I/O Signals to/from Equipment	Note 3
I/O Connection Method	Note 3

Interfaces (Mechanical)	
Mounting Configuration (orientation)	Note 3
Mounting Method (bolts, welds, etc.)	Isolation springs / base to be welded to existing embeds or anchored into concrete depending on the Seller's anchorage configuration
Auxiliary Devices	None

Equipment Seismic Qualification (ESQ)

Parameter	Title	Reference/Document Number	Version / Revision	Remarks
WTP Seismic Design Specification (BUYER)	ENGINEERING SPECIFICATION FOR STRUCTURAL DESIGN LOADS FOR SEISMIC CATEGORY III & IV EQUIPMENT AND TANKS	24590-WTP-3PS-FB01-T0001	Rev. 3	N/A
Specified Seismic Load (BUYER)	ENGINEERING SPECIFICATION FOR STRUCTURAL DESIGN LOADS FOR SEISMIC CATEGORY III & IV EQUIPMENT AND TANKS	24590-WTP-3PS-FB01-T0001	Rev. 3	N/A
Design Seismic Load (SELLER	N/A	N/A	N/A	To be provided by the Seller via the G-321-E submittal process. (Note 2)
Qualification Method (SELLER)	N/A	N/A	N/A	To be provided by the Seller via the G-321-E submittal process. (Note 2)
Qualification Report Number (SELLER)	N/A	N/A	N/A	To be provided by the Seller via the G-321-E submittal process. (Note 2)
Submittal Number (BUYER)	TBD	TBD	TBD	N/A

EQUIPMENT QUALIFICATION DATASHEET (EQD)

Notes and Additional Information

Note 1: Where pressure is given in inches of water column (in-w.c.) in the source document, it is generally assumed that this is in reference to atmospheric pressure and is therefore equivalent to inches of water gage (in-w.g.).

Note 2: Supplier (Seller) shall perform Equipment Seismic and Environmental Qualification in accordance with the listed parameters and the applicable specification requirements.

Note 3: To be provided by Seller.

Note 4: Data to be provided by Seller through the submittal process as required on the G-321-E form.

Please note that source, special nuclear, and byproduct materials, as defined in the Atomic Energy Act of 1954 (AEA) are regulated at the U. S. Department of Energy (DOE) facilities exclusively by DOE acting pursuant to its AEA authority. DOE asserts that pursuant to AEA, it has sole and exclusive responsibility and authority to regulate source, special nuclear, and byproduct materials at DOE-owned nuclear facilities. Information contained herein on radionuclides is provided for process description purposes only.

ISSUED BY
RPP-WTP PDC

R11204283

CENTRIFUGAL MULTI-STAGE BLOWER
Data Sheet:
24590-HLW-MAD-HOP-00038

MR No. 24590-QL-MRA-MACS-00004

Plant Item No. 24590-HLW-MA-HOP-FAN-00008A/B/C, 24590-HLW-MA-HOP-FAN-00010A/B/C

Rev. No. 5

1	Project:	RPP-WTP	Bldg./Room #	HLW / H-0429	Manufacturer	*	
2	Project No:	24590	Supporting Calculations	24590-HLW-M4C-HOP-00011	Manufacturer Part No	*	
3	Site:	DOE Hanford					
4	Safety Class	SS	Supporting Drawings	24590-HLW-M6-HOP-00008 24590-HLW-M6-HOP-20008	Quantity Required	6	
5	Seismic Category (Note 27)	SC-III					
6	SSC Characteristic	Air Permit	System Description	24590-HLW-3YD-HOP-00001	Quality Level	Q	
7	System No.	HOP					
8	Description: HLW Offgas Stack Extraction Blower - Note 14						
9	**DESIGN CONDITIONS**						
10	Indoor Design Temperature	Minimum 59 °F	Maximum 95 °F	Relative Humidity	10% (min)		
11	Contamination Classification Area	C2/C3		Elevation	740 ft above MSL		
12	Environmental Qualification	(see Attachment 2)	Hanford Standard Atmospheric Pressure		398	inches WC	
13	**DESIGN CONDITIONS**						
14	Design Blower Capacity (Note 22)	2211	ACFM	Inlet Air Temperature at Design Conditions	294	°F	
15	Design Static Pressure (Note 21)	82	inches WC	Inlet Air Density at Design Conditions	0.0408	lbs/ft³	
16	Minimum Blower Efficiency at Design Conditions	60	%	Inlet Air Pressure at Design Conditions	12.1	psia	
17	Blower Efficiency at Design Conditions	*	%	Power at Design Conditions	*	BHP	
18	Blower Speed at Design Conditions (Note 25)	*	RPM	Equipment Design Temperature (Note 18)	*	°F	
19	Max. Discharge Temp. at Design Conditions	*	°F	Critical Speeds (Note 17)	*	RPM	
20	**CONSTRUCTION**						
21	Blower Manufacturer	*		Blower Model Number	*		
22	AMCA Drive Arrangement	7		AMCA Inlet Box Position	360		
23	AMCA Motor Position	Direct Drive		AMCA Discharge	CW 360		
24	AMCA Rotation (Note 9)	CW		Blower Scroll Type	*		
25	Blower Motor Operating Weight	*	pounds	Assembly Weight (Mtr + Blower + Base)	*	pounds	
26	Overall Skid Dimensions (Note 5)	Width *	Height *	Length *	inches		
27	Blower Bearing Type	Roller- Grease Lubricated	Blower Bearing Mfg.	*	Bearing Part #	*	
28	Lubricant Mfg. *	Part # *	Bearing Special Features (Notes 19 & 20)	L10 Life 100 khr			
29	Mechanical Coupling Mfg. *	Part # *					
30	**BLOWER WHEEL**						
31	Blower Wheel Type (Note 4)	*	Blower Shaft Diameter	*			
32	Design Wheel Diameter	*	Actual Wheel Diameter	*			
33	Design Wheel Width	*	Actual Wheel Width	*			
34	Design Blower RPM	*	Actual Blower RPM	*			
35	Design Brake Horsepower	*	Actual Brake Horsepower	*			
36	**BLOWER MATERIALS**						
37	Housing (Note 12)	Cast Ductile Iron	Grade *	Blower Wheel	Stainless Steel	Grade	*
38	Evase	N/A	Grade N/A	Mounting Frame	Carbon Steel	Grade	*
39	Shaft	Stainless Steel	Grade *	Inlet Box / Transition Piece	Cast Ductile Iron	Grade	*
40	Inlet Vane	N/A	Grade N/A	Discharge Damper	N/A	Grade	N/A
41	Inlet Screen	N/A	Grade N/A	OSHA Compatible Safety Guards	Carbon Steel	Grade	*
42	**BLOWER ACCESSORIES**						
43	Flanged Inlet	Yes	Flanged Inlet Dimensions	*			
44	Flanged Discharge	Yes	Flanged Discharge Dimensions	*			
45	Flanged Discharge Evase	No	Flanged Evase Dimensions	N/A			
46	Split Housing	No	Split Housing Type	N/A			
47	Inlet Box	No	Inlet Box Type	N/A			
48	Inlet Damper	No	Inlet Damper Type	N/A			
49	Inlet Transition Piece	No	Inlet Transition Piece Flange Dimensions	N/A			
50	Inspection Door (Note 7)	Yes	Inspection Door Size (Note 7)	1" NPT			
51	Drain Connection (Note 7)	Yes	Drain Connection Size (Note 7)	1" NPT			
52	Shaft Seals	Yes	Seal Type	Double Carbon Ring w/ purge			
53	Isolation Base	No	Isolation Base Type	N/A			
54			Isolation Base Manufacturer	N/A			
55	Isolation Springs	Yes	Isolation Springs Mfr and Model No	*			
56			Isolation Springs Minimum Diameter	*			
57			Isolation Springs Deflection	*			
58			Isolation Springs Restraint Features	*			

CENTRIFUGAL MULTI-STAGE BLOWER
Data Sheet:
24590-HLW-MAD-HOP-00038

				MR No. 24590-QL-MRA-MACS-00004		
				Plant Item No. 24590-HLW-MA-HOP-FAN-00008A/B/C 24590-HLW-MA-HOP-FAN-00010A/B/C		Rev. No. 5
1	Project:	RPP-WTP	Bldg./Room #	HLW / H-0429	Manufacturer	*
2	Project No:	24590	Supporting Calculations	24590-HLW-M4C-HOP-00011	Manufacturer Part No	*
3	Site:	DOE Hanford				
4	Safety Class	SS	Supporting Drawings	24590-HLW-M6-HOP-00008	Quantity Required	6
5	Seismic Category (Note 27)	SC-III		24590-HLW-M6-HOP-20008		
6	SSC Characteristic	Air Permit	System Description	24590-HLW-3YD-HOP-00001	Quality Level	Q
7	System No.	HOP				
8	Description: HLW Offgas Stack Extraction Blower - Note 14					
9	Flexible Connection Inlet (Note 23 & 26)	Yes	Insulation (Note 24)	Yes		
10	Flexible Connection Inlet Type	Braided SSTL flexible hose				
11	Flexible Inlet Connection Material	316L SS	braid constructed with 304 SST			
12	Flexible Connection Manufacturer and Model No	*				
13	Flexible Connection Outlet (Note 23 & 26)	Yes				
14	Flexible Connection Outlet Type	Braided SSTL flexible hose				
15	Flexible Outlet Connection Material	316L SS	braid constructed with 304 SST			
16	Flexible Connection Manufacturer and Model No	*				
17	Inlet Screen	No				
18	Inlet Screen Features	N/A				
19	Blower Pedestal	Yes				
20	Blower Pedestal Description	Common mounting base for blower, motor, and bearings				
21	Insulation Studs	No				
22	Silencer	No				
23	MOTOR AND DRIVE REQUIREMENTS					
24	Driven Equipment / Motor / ASD relationship is as follows::					

25	Blower Tag Number	Motor Tag Number	ASD Tag Number
26	HOP-FAN-00008A	HOP-MTR-00007A	HOP-ASD-00002A
27	HOP-FAN-00008B	HOP-MTR-00007B	HOP-ASD-00002B
28	HOP-FAN-00008C	HOP-MTR-00007C	HOP-ASD-00002C
29	HOP-FAN-00010A	HOP-MTR-00008A	HOP-ASD-00004A
30	HOP-FAN-00010B	HOP-MTR-00008B	HOP-ASD-00004B
31	HOP-FAN-00010C	HOP-MTR-00008C	HOP-ASD-00004C

32	Variable Speed Drive	Yes	Provided by others
33	Special Drive Features	1. ASD to operate motor from 30% to 100% of required RPM within a 30 second time frame (max)	
34		2. Provides ASD programming for motor RPM to pass theough any critical speed dead bands to avoid excessive vibration	

35 GAS COMPOSITION

36	Component	kg/hr	wt%
37	N_2	2540	6.74E+01
38	O_2	778.1	2.06E+01
39	H_2O	388.4	1.03E+01
40	Ar	43.3	1.15E+00
41	CO_2	20.7	5.49E-01
42	NO	2.89E-02	7.66E-04
43	NH_3	2.44E-02	6.47E-04
44	N_2O	1.25E-02	3.32E-04
45	SO_2	6.70E-03	1.78E-04
46	NO_2	4.83E-03	1.28E-04
47	H_2	3.53E-03	9.36E-05
48	CO	8.52E-04	2.26E-05
49	VOC	1.38E-04	3.66E-06
50	Hg	1.25E-04	3.32E-06
51	HCl	6.58E-06	1.75E-07
52	HF	3.99E-06	1.06E-07
53	I_2	1.11E-06	2.94E-08
54	Particulate	4.34E-11	1.15E-12
55	Total	3770.58	100

56

57 Source: 24590-HLW-M4E-HOP-00001 pages 14-16 row 61

58

59

CENTRIFUGAL MULTI-STAGE BLOWER
Data Sheet:
24590-HLW-MAD-HOP-00038

MR No.	24590-QL-MRA-MACS-00004					
Plant Item No.	24590-HLW-MA-HOP-FAN-00008A/B/C 24590-HLW-MA-HOP-FAN-00010A/B/C					Rev. No. 5
1	Project:	RPP-WTP	Bldg./Room #	HLW / H-0429	Manufacturer	*
2	Project No:	24590	Supporting Calculations	24590-HLW-M4C-HOP-00011	Manufacturer Part No	*
3	Site:	DOE Hanford				
4	Safety Class	SS	Supporting Drawings	24590-HLW-M6-HOP-00008 24590-HLW-M6-HOP-20008	Quantity Required	6
5	Seismic Category (Note 27)	SC-III				
6	SSC Charateristic	Air Permit	System Description	24590-HLW-3YD-HOP-00001	Quality Level	Q
7	System No.	HOP				
8	Description:	HLW Offgas Stack Extraction Blower - Note 14				

9 **Notes**

10 1) * Denotes data to be provided / verified by vendor.
11 2) N/A denotes "Not Applicable".
12 3) TBD denotes "To Be Determined".
13 4) The impeller shall be anti-surge design developing continuously rising SP from free delivery thru shutoff.
14 5) Bounding dimensions not to exceed 70" W x 76" H x 120" L (Blower, Motor and Baseplate).
15 6) Deleted
16 7) See Specification 24590-WTP-3PS-MACS-T0005 rev. 0, section 3.8.2.
17 8) Deleted
18 9) Rotation is listed as viewed from drive side.
19 10) Deleted
20 11) Deleted
21 12) Blower housing design pressure shall be -3 psi (-82 in WC).
22 13) Deleted
23 14) Contents of this document are Dangerous Waste Permit affecting.
24 15) Deleted
25 16) Deleted
26 17) Critical speeds within operating ranges to be blocked in ASD programming
27 18) This temperature is required for material selection and corrosion analysis. The value is the average temperature of the inlet temperature in line 14 of page 1 and the Discharge Temperature on Line 19 of page 1.
28 19) Provide each blower bearing with RTDs & 2 - directional (X and Y) vibration sensors for remote indication
29 20) Radial type roller bearings shall have labyrinth type seal.
30 21) The original, more conservative of 82 inches WC was retained rather than the minimum value 70 inches WC in 24590-HLW-M4C-HOP-00011 Rev. 2.
31 22) Design blower capacity is the predicted capacity from calculation, 24590-HLW-M4C-HOP-00011 Rev 1 Page A-10 Cell Y61, divided by 2 (two blowers running at capacity)
32 23) Connections shall match Buyer's supply pipe: 10 inch diameter, 316L SS, Schedule 40S, w/ 150 lb. RF Flange.
33 24) Blowers shall be insulated (except bearing housings) by Buyer and heat traced to maintain casing metal temperature above the acid dewpoint of the process gas.
34 25) Shaft speed shall not exceed 3600 rpm unless approved by Buyer. Tip speed of rotating assembly shall not exceed 530 fps unless approved by Buyer.
35 26) See Specification 24590-WTP-3PS-MACS-T0005 rev. 0, section 3.8.1.6 for flexible connection requirements.
36 27) See Specification 24590-WTP-3PS-MACS-T0005 rev. 0, section 6.3 for seismic testing requirements.
37
38
39

40 **SAFETY SCREENING**
41 **Safety Screening/Evaluation Required? If yes per 24590-WTP-GPP-SREG-002, E&NS Signature required below.** X Yes ___ No
42
43
44
45
46
47
48
49
50
55

CENTRIFUGAL MULTI-STAGE BLOWER
Data Sheet:
24590-HLW-MAD-HOP-00038

MR No.
24590-QL-MRA-MACS-00004

Plant Item No.
24590-HLW-MA-HOP-FAN-00008A/B/C
24590-HLW-MA-HOP-FAN-00010A/B/C

Rev. No.
5

1	Project:	RPP-WTP	Bldg./Room #	HLW / H-0429	Manufacturer	*
2	Project No:	24590	Supporting Calculations	24590-HLW-M4C-HOP-00011	Manufacturer Part No	*
3	Site:	DOE Hanford				
4	Safety Class	SS	Supporting Drawings	24590-HLW-M6-HOP-00008 24590-HLW-M6-HOP-20008	Quantity Required	6
5	Seismic Category (Note 27)	SC-III				
6	SSC Characteristic	Air Permit	System Description	24590-HLW-3YD-HOP-00001	Quality Level	Q
7	System No.	HOP				
8	Description: HLW Offgas Stack Extraction Blower - Note 14					

Rev	Reason for Revision	System Engineer	Equipment Engineer	E&NS	Checker	Reviewer	Approver	Date
5	Revised to incorporate new specification 24590-WTP-3PS-MACS-T0005, Rev. 0 to remove ASME AG-1 requirements. Other minor clarifications are as noted with revision bars. This data sheet is issued for quote.	MGO.	M.Summers	C Meng	AM		R. Stevens	5/14/10
4	Reissued for Purchase. Minor change, (inclusion of pages 5 & 6 which were omitted in rev. 3)	M. O'Neill	M.Summers	C. Meng	D.Lamberd	S. Kretzschmar	R. Stevens	7/22/2009
3	Reissued for purchase. Minor revisions to format for clarity. Revised the Material Requisition number from 24590-QL-MRA-MACS-00002 to the new 24590-QL-MRA-MACS-00004. Corrected tag numbers and updated revision number. Changed title to Centrifugal Multi-stage Blowers. Removed reference to cancelled calculation 25490-HLW-MAC-HOP-00001. Added field for SSC Characteristic. Added reference to Note 14. Updated design inlet conditions, capacity, and static pressure to align with 24590-HLW-M4C-HOP-00011 Rev.1 & ECCN 24590-HLW-M4E-HOP-00001. Added field for Inlet Pressure at Design Conditions in place of Total Static Pressure (Max) field. Added field for required minimum efficiency at design conditions per CCN 199933. Changed title of field for Maximum Discharge Temperature and deleted Note 16. Changed title of field from Natural Frequencies to Critical Speeds for clarity. Removed normal and minimum design conditions for clarity. Revised AMCA Drive Arrangement from 8 to 7 to align with industry offering. Specified inlet box position to 360. Changed AMCA Discharge from Upblast to CW 360 to allign with AMCA 99-2406-83. Relocated Blower Motor Operating Weight and Assembly Weight fields and added field for Overall Skid Dimensions. Specified Roller grease lubricated bearings, added fields for Mfg. and Part # for bearing, lubricant, and coupler. Changed coupler to vendor specified. Revised specified materials for housing, shaft, blower wheel, mounting frame, and inlet box/transition piece to align with industry offering. Material grades to be specified by vendor. Revised inspection door size and drain from vendor specified to 1"NPT per specification. 24590-WTP-3PS-MACS-T0004 Rev. 5. Specified seal type as Double Carbon Ring w. purge. Added Note 2 to Special Drive Features field. Added Gas Composition. Deleted Notes 10, 13, 16 and revised Notes 17, 18, 19, 20, & 21. Added Notes 22, 23, 24, 25, 26, & 27	Mike O'Neill	Scott E. Anderson	C. Meng	A. Morretta	S. Kretzschmar	R. Stevens	6/11/2009
2	Re-issued with updated design conditions, reformatted mechanical datasheet for clarity, attached motor and EQ datasheets. This document supercedes 24590-HLW-MUD-HOP-00002.	Mike O'Neill	Scott E. Anderson	C. Meng	C. Knauss	S. Kretzschmar	R. Stevens	3/26/2008
1	Re-issued for purchase, added Note 12, and updated design conditions.	Y. Nurdogan	G. Dunn	C. Meng	D. Reinemann	J. Rouse	J. Julyk	3/21/2007
0	Issued for purchase	J. Rewari	N/A	N/A	J. Medina	N/A	E. Isern	8/12/2004

ATTACHMENT 1 **24590-HLW-MAD-HOP-00038** **ELECTRICAL DATA SHEET** **LOW VOLTAGE INDUCTION MOTOR**	MR No. **24590-QL-MRA-MACS-00004**	
	Plant Item No. **24590-HLW-EM-HOP-MTR-00007A/B/C** **24590-HLW-EM-HOP-MTR-00008A/B/C**	Rev No. **5**

Motor Tag No.: 24590-HLW-EM-HOP-MTR-00007A/B/C and 24590-HLW-EM-HOP-MTR-00008A/B/C

Driven Equipment No.: 24590-HLW-MA-HOP-FAN-00008A/B/C and 24590-HLW-MA-HOP-FAN-00010A/B/C

Service: HLW Offgas Stack Extraction Fan

Refer to "Primary Specification": 24590-WTP-3PS-MACS-T0005

LINE NO.	DESCRIPTION	USER SPECIFIED	SUPPLIER FURNISHED	UNITS
	BASIC DATA:			
1	RATED HORSEPOWER	-	*	HP
2	SYNCHRONOUS SPEED	-	*	RPM
3	VOLTAGE	460	*	V
4	PHASE	3	*	-
5	FREQUENCY	60	*	Hz
6	INSULATION CLASS	F	*	-
7	TEMPERATURE RISE ABOVE 40°C AMBIENT	80	*	deg. C
8	NEMA DESIGN TYPE (B, C, OTHER)	B	*	-
9	EFFICIENCY (STANDARD, PREMIUM)	PREMIUM	*	-
10	ENCLOSURE TYPE (TEFC - SEVERE DUTY PER IEEE Std. 841, TENV, WP1I)	TEFC IEEE Std. 841	*	-
11	SERVICE FACTOR	1.15	*	-
12	COUPLED DRIVE (DIRECT, BELT, GEAR)	Direct	*	-
13	BEARING (ANTI-FRICTION, SLEEVE)	Anti-Friction	*	-
14	BEARING SEAL (ONE END, BOTH ENDS)	Both Ends	*	-
15	SPACE HEATER (FOR MOTORS > 20 HP)	Yes	*	W
16	RTD FOR SLEEVE BEARING : 1 per bearing for Belt drive only	N/A	*	Ω
17	TERMINAL BOX LOCATION		*	-
18	WARRANTY (2 YEARS, 3 YEARS, 5 YEARS)	**see Terms and condition**	*	-
19	SHOP TESTS			
	- MFR STANDARD TEST (Yes / No)	Yes	*	
	- ROUTINE TEST (Yes / No)	Yes	*	
	- FULL TEST (Yes / No)	No	*	
20	UNUSUAL SERVICE CONDITIONS:	Inverter Duty		
21	FLAMMABLE OR EXPLOSIVE GASES	No	*	
22	COMBUSTIBLE, EXPLOSIVE, ABRASIVE OR CONDUCTIVE DUST	No	*	
23	WET OR DRY OPERATING CONDITIONS	Dry	*	
24	NUCLEAR RADIATION	0.5 mrad/hr.		
25	SPECIAL PAINTING REQUIREMENTS PER IEEE Std. 841	(Note 5)	*	
26	OTHER (SC,SS, APC, Non-ITS)	SS	*	
27	OTHER (SEISMIC CATEGORY I, II, III or IV)	SC-III	*	

ATTACHMENT 1 24590-HLW-MAD-HOP-00038 ELECTRICAL DATA SHEET LOW VOLTAGE INDUCTION MOTOR	MR No. 24590-QL-MRA-MACS-00004	
	Plant Item No. 24590-HLW-EM-HOP-MTR-00007A/B/C 24590-HLW-EM-HOP-MTR-00008A/B/C	Rev No. 5

Motor Tag No.: 24590-HLW-EM-HOP-MTR-00007A/B/C and 24590-HLW-EM-HOP-MTR-00008A/B/C

Driven Equipment No.: 24590-HLW-MA-HOP-FAN-00008A/B/C and 24590-HLW-MA-HOP-FAN-00010A/B/C

Service: HLW Offgas Stack Extraction Fan

Refer to "Primary Specification": 24590-WTP-3PS-MACS-T0005

LINE NO.	DESCRIPTION	USER SPECIFIED	SUPPLIER FURNISHED	UNITS
28	MANUFACTURER	-	*	-
29	NEMA FRAME	-	*	-
30	MODEL NUMBER	-	*	-
31	SERIAL NUMBER / MANUFACTURER DATE	-	*	-
32				
33	FULL LOAD CURRENT	-	*	A
34	FULL LOAD TORQUE	-	*	ft-lb
35	POWER FACTOR : - @ 50 % LOAD	-	*	%
	- @ 75 % LOAD	-	*	%
	- @ 100 % LOAD	-	*	%
36	EFFICIENCY : - @ 50% LOAD	-	*	%
	- @ 75% LOAD	-	*	%
	- @ 100% LOAD	-	*	%
37	LOCKED ROTOR CURRENT @ 100 % of RATED VOLTAGE	-	*	A
38	LOCKED ROTOR CURRENT @ 80% of RATED VOLTAGE	-	*	A
39	ALLOWABLE STALL TIME @ FULL VOLTAGE	-	*	SEC
40	ALLOWABLE STALL TIME @ 80% of VOLTAGE	-	*	SEC
41	LOSSES @ FULL LOAD	-	*	W
42	ROTOR WK2 @ MOTOR SHAFT SPEED (For > 250 hp only)	-	*	lb-ft²
43	STARTING POWER FACTOR (For > 75 hp only)	-	*	-
44	SUB TRANSIENT REACTANCE AND X/R (For > 250 hp only)	-	*	-
45	WEIGHT	-	*	lbs
46	ROTATION (CW, CCW, BI-DIR.) FACING DRIVEN EQUIPMENT	-	*	-
47	MEAN TIME BETWEEN FAILURE (MOTOR 100 HP AND ABOVE)		*	
48	STARTING METHOD (FULL/REDUCED VOLTAGE, ASD APPLICATION)	ASD		-
49				
50	RECOMMENDED BEARING LUBRICANT	-	*	

NOTES:

(1) DELETED

(2) Motor should be applied within its rating based on service factor of 1.0.

(3) Data Sheet Line no. from 35 to 47 are applicable for motor 100 HP and above.

(4) The fan and motor are subjected to the same environmental conditions.

(5) See specifcation **24590-WTP-3PS-MACS-T0005 Attachment B**, for requirements.

EQUIPMENT QUALIFICATION DATASHEET (EQD)

Equipment Identification

Component Tag Number	24590-HLW-MA-HOP-FAN-00008A/B/C 24590-HLW-MA-HOP-FAN-00010A/B/C 24590-HLW-EM-HOP-MTR-00007A/B/C 24590-HLW-EM-HOP-MTR-00008A/B/C	Safety Classification	☐ SC ☒ SS ☐ APC ☐ SDC ☐ SDS ☐ RRC
Manufacturer / Supplier	Note 4		
Requisition Number	24590-QL-MRA-MACS-00004		
Model	Note 4	Seismic Category	☐ SC-I ☐ SC-II ☒ SC-III ☐ SC-IV
Description (Include descriptive text [e.g., location, elevation])	HLW Offgas Stack Extraction Fans.		
Safety Function(s)	Provides negative pressure on HLW secondary off-gas system. In conjunction with Booster Extraction Fans, provides motive force for off-gas flow through all off-gas equipment up to and including discharge at stack.		

Seismic Safety Function	☒ Yes ☐ No	Room Number(s):	H-0429
Maintenance Accessible	☒ Yes ☐ No	Method of Maintenance Access:	☐ Remote ☒ Hands On ☐ None
Seismic Operability Requirements:	☒ During Seismic Event	☒ After Seismic Event	
ITS Equipment Type:	☐ Passive Mechanical	☒ Active Mechanical	☒ Electrical

Equipment Environmental Qualification (EEQ)

Environment ☒ Mild ☐ Harsh Contamination Class: C2/C3 Radiation Class: R2	Hi Rad Service ☐ Yes ☒ No	Design Life (yrs) ☒ 40 ☐ Other _ with required maintenance

Parameter Type/Units	Parameter Value	Time Duration (number)	Time Units	WTP Document Number (BUYER)	Submittal Number (SELLER)
Normal					
Normal High Temperature (°F)	95	40	yr	24590-HLW-U0D-W16T-00001	Note 4
Normal Low Temperature (°F)	59	40	yr	24590-HLW-U0D-W16T-00001	Note 4
Normal High Relative Humidity (%RH)	100	40	yr	24590-HLW-U0D-W16T-00001	Note 4
Normal Low Relative Humidity (%RH)	10	40	yr	24590-HLW-U0D-W16T-00001	Note 4
Normal High Pressure (in.-w.g.)	0	40	yr	24590-HLW-U0D-W16T-00001	Note 4
Normal Low Pressure (in.-w.g.)	-0.4	40	yr	24590-HLW-U0D-W16T-00001	Note 4
Normal Radiation Dose Rate (mR/hr)	0.5	40	yr	24590-HLW-U0D-W16T-00001	Note 4
Vibration Magnitude (g)	N/A	40	yr	N/A	Note 4
Vibration Frequency (Hz)	N/A	40	yr	N/A	Note 4

EQUIPMENT QUALIFICATION DATASHEET (EQD)

Equipment Environmental Qualification (EEQ) *(continued)*

Parameter Type/Units	Parameter Value	Time Duration (number)	Time units	WTP Document Number (BUYER)	Submittal Number (SELLER)
Additional Normal Information:					
Abnormal					
Abnormal High Temperature (°F)	95	8	hr	24590-HLW-U0D-W16T-00001	Note 4
Abnormal Low Temperature (°F)	59	8	hr	24590-HLW-U0D-W16T-00001	Note 4
Abnormal High Relative Humidity (%RH)	95	8	hr	24590-HLW-U0D-W16T-00001	Note 4
Abnormal Low Relative Humidity (%RH)	10	8	hr	24590-HLW-U0D-W16T-00001	Note 4
Abnormal High Pressure (in.-w.g.)	4	8	hr	24590-HLW-U0D-W16T-00001	Note 4
Abnormal Low Pressure (in.-w.g.)	-6.7	8	hr	24590-HLW-U0D-W16T-00001	Note 4
Abnormal Radiation Dose Rate (mR/hr)	0.5	0	hr	24590-HLW-U0D-W16T-00001	Note 4
Wet Sprinkler System Present	YES	2	hr	24590-HLW-U0D-W16T-00001	Note 4
Additional Abnormal Information					
Design Basis Events (DBE)					
DBE High Temperature (°F)	95	1000	hr	24590-HLW-U0D-W16T-00001	Note 4
DBE Low Temperature (°F)	59	1000	hr	24590-HLW-U0D-W16T-00001	Note 4
DBE High Relative Humidity (%RH)	95	1000	hr	24590-HLW-U0D-W16T-00001	Note 4
DBE Low Relative Humidity (%RH)	10	1000	hr	24590-HLW-U0D-W16T-00001	Note 4
DBE High Pressure (in.-w.g.)	4	1000	hr	24590-HLW-U0D-W16T-00001	Note 4
DBE Low Pressure (in.-w.g.)	-6.7	1000	hr	24590-HLW-U0D-W16T-00001	Note 4
DBE Radiation Dose Rate (mR/hr)	0.5	0	hr	24590-HLW-U0D-W16T-00001	Note 4
Flood Height (ft)	1.58	1000	hr	24590-HLW-U0D-W16T-00001	Note 4
Submergence (ft)	N/A**	N/A**	N/A	24590-HLW-U0D-W16T-00001	Note 4
Chemical/Spray Exposure	Yes	12.5	hr	24590-HLW-U0D-W16T-00001	Note 4
Additional DBE Information	Spray exposure is composed of water from fire suppression system. **Equipment is not expected to operate submerged or after a DBE flood event.				

EQUIPMENT QUALIFICATION DATASHEET (EQD)

DBE Chemical Exposure Details	
DBE Chemical Types/Concentrations	NONE

Interfaces (Electrical)	
Power Supply Voltage (VAC, VDC)	460 VAC
Power Supply Frequency (Hz)	60
Power Connection Method	Note 3
I/O Signals to/from Equipment	Note 3
I/O Connection Method	Note 3

Interfaces (Mechanical)	
Mounting Configuration (orientation)	Note 3
Mounting Method (bolts, welds, etc.)	Isolation springs / base to be welded to existing embeds or anchored into concrete depending on the Seller's anchorage configuration.
Auxiliary Devices	None

Equipment Seismic Qualification (ESQ)

Parameter	Title	Reference/Document Number	Version / Revision	Remarks
WTP Seismic Design Specification (BUYER)	ENGINEERING SPECIFICATION FOR STRUCTURAL DESIGN LOADS FOR SEISMIC CATEGORY III & IV EQUIPMENT AND TANKS	24590-WTP-3PS-FB01-T0001	3	N/A
Specified Seismic Load (BUYER)	ENGINEERING SPECIFICATION FOR STRUCTURAL DESIGN LOADS FOR SEISMIC CATEGORY III & IV EQUIPMENT AND TANKS	24590-WTP-3PS-FB01-T0001	3	N/A
Design Seismic Load (SELLER	N/A	N/A	N/A	To be provided by the Seller via the G-321-E submittal process. (Note 2)
Qualification Method (SELLER)	N/A	N/A	N/A	To be provided by the Seller via the G-321-E submittal process. (Note 2)
Qualification Report Number (SELLER)	N/A	N/A	N/A	To be provided by the Seller via the G-321-E submittal process. (Note 2)
Submittal Number (BUYER)	TBD	TBD	TBD	N/A

EQUIPMENT QUALIFICATION DATASHEET (EQD)

Notes and Additional Information

Note 1: Where pressure is given in inches of water column (in-w.c.) in the source document, it is generally assumed that this is in reference to atmospheric pressure and is therefore equivalent to inches of water gage (in-w.g.).

Note 2: Supplier (Seller) shall perform Equipment Seismic and Environmental Qualification in accordance with the listed parameters and the applicable specification requirements.

Note 3: To be provided by Seller.

Note 4: Data to be provided by Seller through the submittal process as required on the G-321-E form.

Please note that source, special nuclear, and byproduct materials, as defined in the Atomic Energy Act of 1954 (AEA) are regulated at the U. S. Department of Energy (DOE) facilities exclusively by DOE acting pursuant to its AEA authority. DOE asserts that pursuant to AEA, it has sole and exclusive responsibility and authority to regulate source, special nuclear, and byproduct materials at DOE-owned nuclear facilities. Information contained herein on radionuclides is provided for process description purposes only.

Quarter Ending June 30, 2011 24590-PTF-PCN-ENV-10-031

Hanford Facility RCRA Permit Modification Notification Form
Part III, Operating Unit 10
Waste Treatment and Immobilization Plant

Index

Page 2 of 3: Hanford Facility RCRA Permit, Part III, Operating Unit 10, Waste Treatment and Immobilization Plant
Replace mechanical data sheet and engineering specification for the PTF Vessel Vent Caustic Scrubber (PVP-SCB-00002) in Appendix 8.6 and Appendix 8.7, respectively, of the Dangerous Waste Permit (DWP).

Submitted by Co-Operator:

Donna M Busche 4/27/11
D. M. Busche Date

Reviewed by ORP Program Office:

6/15/11
D. L. Noyes Date

Quarter Ending June 30, 2011

24590-PTF-PCN-ENV-10-031

Hanford Facility RCRA Permit Modification Notification Form	
Unit: **Waste Treatment and Immobilization Plant**	Permit Part: **Part III, Operating Unit 10**

Description of Modification:

The purpose of this Class 1 prime modification is to update the mechanical data sheet and engineering specification for the PTF Vessel Vent Caustic Scrubber (PVP-SCB-00002) in Appendix 8.6 and 8.7, respectively of the DWP.

The following mechanical data sheet and engineering specification are being submitted to replace the documents currently in Appendix 8.6 and 8.7, respectively.

Appendix 8.6			
Replace:	24590-PTF-MKD-PVP-P0002, Rev. 2	With:	24590-PTF-MKD-PVP-00002, Rev. 11
Appendix 8.7			
Replace:	24590-PTF-3PS-MKAS-T0001, Rev. 1	With:	24590-PTF-3PS-MKAS-T0001, Rev. 2

This modification requests Ecology approval and incorporation into the permit the changes to the above DWP documents. Changes to earlier revisions of source documents not captured by change bars are identified in the revision history summary. Revisions are the result of ongoing design (changes from vendor preliminary data to vendor detailed design), seismic and mixing analyses, and general criteria from design verification review. The following identifies the significant changes that have been incorporated:

Engineering Specification (24590-PTF-3PS-MKAS-T0001, Rev. 2)

- Administrative revision. Corrected Table of Contents (i.e., added Section 3.9 which was not included in the Table of Contents for Rev. 1)
- Corrected the titles of document referenced in Sections 2.3.1 and 3.9.3 and defined a previously undefined acronym in Section 2.2.5

Mechanical Data Sheet (24590-PTF-MKD-PVP-00002, Rev. 11)

- Modified, deleted, and added notes; added references
- Added Equipment Qualification Datasheet
- Added materials for packing support plate, bed limiter, support grid and all hardware for internals
- Revised inlet offgas and scrubber sump vessel operating temperatures and added recirculation to sump mixing temperature
- Revised minimum and maximum operating temperatures and the number of specific gravity and content level cycles
- Added nozzle loads table
- Revised seismic category
- Revised total and maximum operating volumes
- Added hydrostatic test pressure per ASME Section VIII, Division 1
- Revised nozzle data in Note 7 for N03, N07 and N11
- Revised process data as indicated on the data sheet including the scrubber sump vessel liquid levels
- Added design pressure and temperature to nozzle load table
- Added notes to nozzle load table
- Provided a revised equipment qualification datasheet

There are no outstanding change documents against the documents included in this permit modification.

Quarter Ending June 30, 2011 24590-PTF-PCN-ENV-10-031

WAC 173-303-830 Modification Class:	Class 1	Class [1]1	Class 2	Class 3
Please mark the Modification Class:		X		

Enter relevant WAC 173-303-830, Appendix I Modification citation number: NA

Enter wording of WAC 173-303-830, Appendix I Modification citation:

In accordance with WAC 173-303-830(4)(d)(i), this modification notification is requested to be reviewed and approved as a Class [1]1 modification. WAC 173-303-830(4)(d)(ii)(A) states, "Class 1 modifications apply to minor changes that keep the permit current with routine changes to the facility or its operation. These changes do not substantially alter the permit conditions or reduce the capacity of the facility to protect human health or the environment. In the case of Class 1 modifications, the director may require prior approval."

Modification Approved/Concur: ☑ Yes ☐ Denied (state reason below)

Reason for denial:

Reviewed by Ecology:

J. J. Wallace for 7/14/11 Date

ISSUED BY PDC

Mechanical Data Sheet:
PTF Vessel Vent Caustic Scrubber

Plant Item Number
24590-PTF-MK-PVP-SCB-00002

Data Sheet Number
24590-PTF-MKD-PVP-00002, Rev 11

Project:	WTP	P&ID	24590-PTF-M6-PVP-00017001 (11)
Project No:	24590	Calculation	Attachment 1 (11)
Project Site:	DOE Hanford		
Area No.	200E	(11)	
Building:	PTF	Vessel Drawing	24590-QL-POA-MKAS-00002-02-00011
System No.	PVP		

Service Data

Quality Level	Q	Fabrication Specification	24590-WTP-3PS-MV00-T0001 & 24590-PTF-3PS-MKAS-T0001
Seismic Category (11)	SC-I (Note 12)	Design Code	ASME Section VIII, Division 1
Service/Contents	Radioactive Liquid	Code Stamp	Yes
Design Specific Gravity	1.04	NB Registration	Yes
Max Operating Volume gal	2040	Wind Design	None
Total Volume (11) gal	2310	Snow/Ash Design	None
Postweld Heat Treat	Not Required	Seismic Design	24590-WTP-3PS-MV00-T0002
Seismic Base Moment ft*lb	Deleted		24590-WTP-3PS-SS90-T0001
Environmental Qualification	See EQ Sections (All Metal Construction)		

Design Data

Packed Column Inside Diameter (A)	48"	Floor to Bottom of Sump Vessel (E)	105 1/8"	Corrosion Allowance	0.04" (Note3)
Sump Vessel Inside Diameter (B)	108"	Scrubber Height (F)	630 11/16"	Minimum Design temperature for Metal	F -20
Sump Height	83" min.	Ring Beam Height (G)	18"	Hydrostatic Test Pressure PSIG	ASME Section VIII, Division 1 (11)
Dimension D	525 9/16"	Ring Beam Center-to Center Diameter (H.	108"		

		Vessel Oper	Vessel Design	Deleted	Notes
Internal Pressure	PSIG	-1.5	-5/+15	Deleted	
External Pressure	PSIG	0	0	Deleted	Deleted
Temperature	°F	120	150	Deleted	
Deleted		Deleted			
Deleted		Deleted			

Materials of Construction

Component	Material	Containment	Notes
Column Top Head	SA-240 316	Primary	Notes 4 and 8
Column Shell	SA-240 316	Primary	Notes 4 and 8
Sump Vessel Top Head	SA-240 316	Primary	Notes 4 and 8
Sump Vessel Shell	SA-240 316	Primary	Notes 4 and 8
Sump Vessel Bottom Head	SA-240 316	Primary	Notes 4 and 8
Vessel Internals	SA-240 316	N/A	Notes 4, 5 and 8
Dry Packing	UNS N08367/N08926	N/A	0.012" material thickness or maximum standard thickness available
Wet Packing	UNS N08367/N08926	N/A	0.012" material thickness or maximum standard thickness available
Vessel Support	SA-240 304	N/A	Note 4
Deleted			
Pipe	SA-312 TP316	Primary (Note 6)	Notes 4 and 8
Forgings/ Bar stock	SA-182 F316	N/A	Notes 4 and 8
Gaskets	None		
Packing support plate, bed limiter, support grid and all hardware for the internals	UNS N08367/N08926		
Mounting Base	Note 7	N/A	18" high ring beam

Miscellaneous Data

Orientation	Vertical
Support Type	Skirt
Insulation Function	None
Insulation Thickness inch	None
Insulation Material	None
External Finish	Welds descaled as laid
Internal Finish	Welds ground smooth

Reference 3	Dry Weight (lbs)	Dry C.G. (inches: X,Y,Z)	Operating Weight (lbs)	Operate C.G. (inches: X,Y,Z)	Testing Weight (lbs)	Shipping Wt (lbs)
Scrubber	61,242	0.351, 0.694, 240.327	80,919	0.265, 0.525, 220.179	NA	66,242
Packed Column	18,114	0.000, 0.000, 412.096	19,137	0.000, 0.000, 412.641		
Sump Vessel	26,315	0.000, 0.000, 175.098	44,969	0.000, 0.000, 161.762		

Notes

Note 1: Deleted.

Note 2: Deleted.

Note 3: The corrosion allowance of 0.04" shall apply to all surfaces in contact with process fluids except for the dry and wet packings and associated hardware which has 0.0" corrosion allowance.

Note 4: Material shall have a carbon content not to exceed 0.030%, dual certified.

Note 5: Seller shall submit item details for customer review.

Note 6: Nozzles are primary confinement. The spare nozzle shall have a welded cap. See Note 8.

Note 7: Ring Beam web and top flange shall be SA-240 304L, bottom flange shall be A-572 GR50.

Note 8: All welds forming part of the primary and auxiliary confinements, including the nozzle attachment welds shall be subjected to 100% volumetric examination.

Note 9: The scrubber is located in a Black Cell. (R5 / C5 area)

Note10: Contents of this document are Dangerous Waste Permit Affecting.

Note 11: References are included for BNI use only and will not be shown with revision triangles - only data being changed will require revision triangles.

Note 12: Internal packings and demister sections qualified to SC-I.

(11)

	Mechanical Data Sheet: PTF Vessel Vent Caustic Scrubber	Plant Item Number 24590-PTF-MK-PVP-SCB-00002
		Data Sheet Number 24590-PTF-MKD-PVP-00002, Rev 11

Notes for Outline Profile of the PTF Vessel Vent Caustic Scrubber

Note 1: See "Design Data" in sheet 1 of 11 for the bounding dimensions of the scrubber.

Note 2: The maximum sump batch volume shall be determined based on given dimensions:
- Seller to provide the batch volume and total time of operation per batch based on runback, maximum expected condensate and caustic makeup.

Note 3: The minimum allowance from maximum sump operating volume to overflow shall satisfy the larger of all three conditions below:
- minimum 2" liquid depth
- at least 2% of maximum operating liquid depth
- change in liquid level equivalent to 5 minutes of maximum liquid accumulation in the scrubber sump

Note 4: Nozzle requirements are as follows:
- Unless noted otherwise, nozzles shall extend 12 inches beyond the vessel.
- Nozzle schedule shall be determined by the Seller, taking into consideration all requirements stated in Buyer document # 24590-WTP-3PS-MV00-T0001, *Engineering Specification for Pressure Vessel Design and Fabrication.*
- All nozzles with connecting pipes shall be end-prepared per Buyer document # 24590-WTP-PW-P30T-00001, *WTP End Prep Detail for Field Butt Welds*, to tie in with the respective connecting pipe size and schedule in note 7.
- Seller shall confirm size and schedule/wall thickness for all nozzles specified in note 7 below.

Note 5: Ring Beam Detail
- Refer to Buyer document 24590-WTP-MV-M59T-00001, for ring beam details.
- Ring beam top and bottom flanges shall be 6" wide.
- Ring beam web shall be 3/4" thick.
- The ring beam web to flange weld shall be full penetration.
- Ring beam design per River Protection Project - Waste Treatment Plant, vessel supports at El. 0' and below, 24590-PTF-DDC-S13T-00001.
- NDE requirements shall be in accordance with 24590-WTP-3PS-SS00-T0002, section 11.6 "Additional Examination for Quality Levels 1 and 2 Structural Steel Welds". All welds of Ring beam are critical welds.
  Section 11.6 is mandatory even if the web to flange weld NDE is not indicated on the drawing.

Note 6: Locate inlet nozzle (N01) on the sump vessel and use as inspection manway. Inlet nozzle (N01) must be higher than the overflow nozzle (N12).

Note 7: Nozzle data are as follows:

Nozzle		Connecting Pipe		Function
No.	Size	NPS	Schedule	
N01	24" NPS	24	0.375"	Offgas Inlet
N02	24" NPS	24	0.375"	Offgas Outlet
N03	2" NPS	1.5	40S	Recirculated Caustic Solution for Mixing (dip pipe) 11
N04	2" NPS	2	40S	Recirculated Caustic Solution for Scrubbing
N05	4" NPS	4	40S	Pump Suction
N06	2" OD	1	40S	Demineralized Water Inlet (See Detail 7, Dwg 24590-WTP-MV-M59T-00016001)
N07	2" OD	1	40S	Demineralized Water Inlet (See Detail 7, Dwg 24590-WTP-MV-M59T-00016001) 11
N08	1.5" NPS	1.5	40S	Reagent Inlet (5M NaOH)
Deleted				
Deleted				
N11	2" OD	1	40S	Sample Recirculation Return (See Detail 6, Dwg 24590-WTP-MV-M59T-00016001)
N12	6" NPS	6	10S	Scrubber Sump Vessel Overflow 11
N13	6" NPS	1	40S	Bubbler Type Level Indicator (See Detail 19, Dwg. 24590-WTP-MV-M59T-00016002)
N14	3" NPS			Spare (with welded cap)
N15	2" OD	0.75	40S	Pressure Transmitter Leg (See Detail 6, Dwg 24590-WTP-MV-M59T-00016001)
N16	2" OD	0.75	40S	Pressure Transmitter Leg (See Detail 6, Dwg 24590-WTP-MV-M59T-00016001)
N17	2" OD	0.75	40S	Pressure Transmitter Leg (See Detail 6, Dwg 24590-WTP-MV-M59T-00016001)
N18	2" OD	0.75	40S	Pressure Transmitter Leg (See Detail 6, Dwg 24590-WTP-MV-M59T-00016001)
Deleted				
Deleted				

NPS - Nominal Pipe Size (inch)
OD - Outside Diameter (inch)

	Mechanical Data Sheet: PTF Vessel Vent Caustic Scrubber	Plant Item Number 24590-PTF-MK-PVP-SCB-00002
		Data Sheet Number 24590-PTF-MKD-PVP-00002, Rev 11

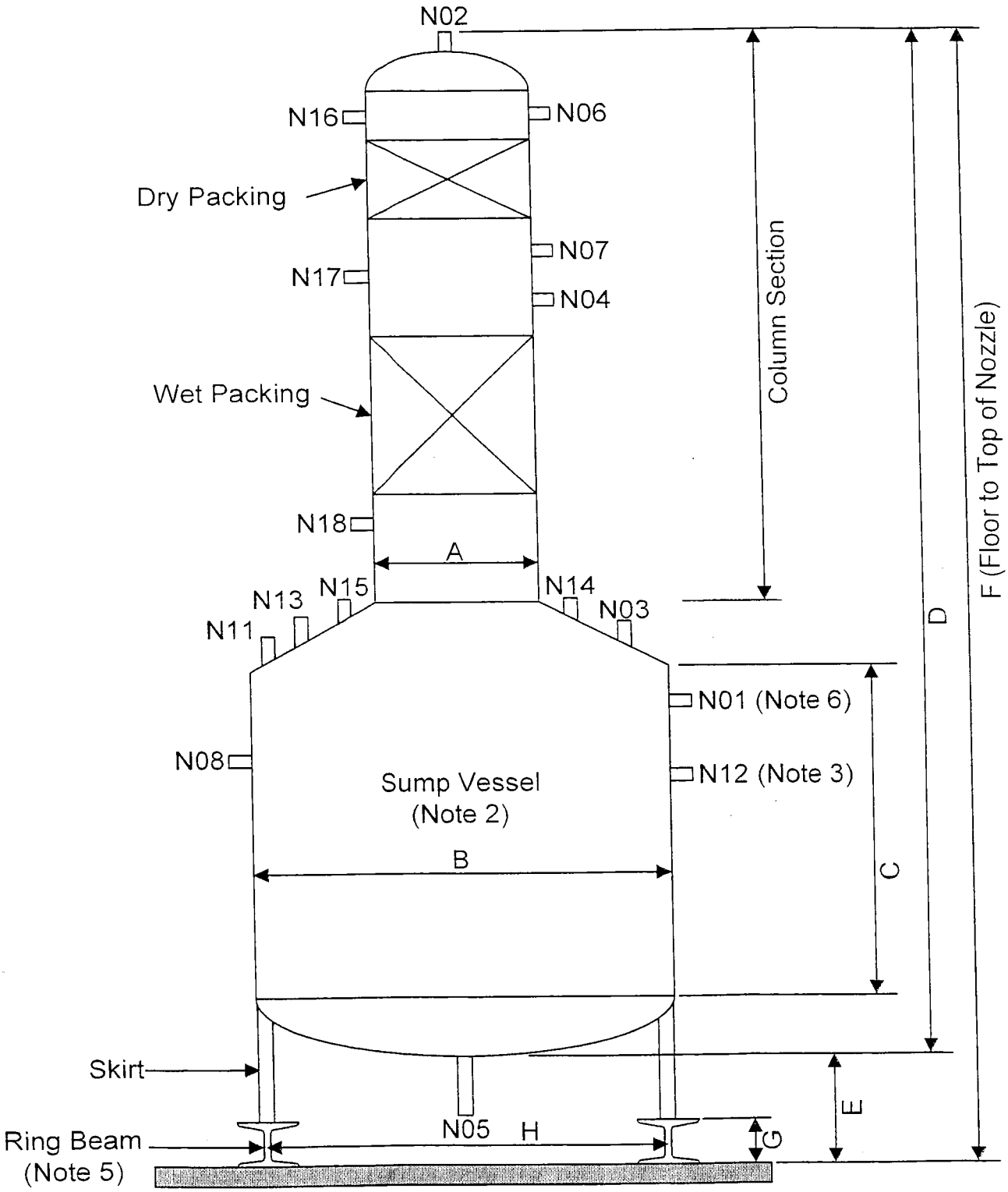

Outline Profile of the PTF Vessel Vent Caustic Scrubber

BECHTEL	**Mechanical Data Sheet:** **PTF Vessel Vent Caustic Scrubber**	Plant Item Number 24590-PTF-MK-PVP-SCB-00002 Data Sheet Number 24590-PTF-MKD-PVP-00002, Rev 11

PROCESS DATA

Description		Instrument Tag	Unit	Operating Lo	Operating Normal	Operating Hi			Remarks
Inlet Offgas	Pressure	PC-0404	W.G.	-40.0"	-35.0"	-10"			
Inlet Offgas	Temperature	TI-0401	°F	113	120	138			
Inlet Offgas	Volume Flow Rate		SCFM	(Note 2)	3600	*	11		Deleted 11
Inlet Offgas	Rel. Humidity		%		100	100			
Inlet Offgas	NO_2		ppm vol		130	200	11		Dry basis concentration
Inlet Offgas	NO		ppm vol		70				Dry basis concentration
Inlet Offgas	CO_2		ppm vol		330				Dry basis concentration
Inlet Offgas 11	Mass Flow Rate		kg/hr	See	Attachment	2 & 3			
Scrubber Sump Vessel	Pressure	PI-0408	W.G.	-40.0"	-35.0"	-10"			
Scrubber Sump Vessel	Liquid Temperature	TC-0405	°F		95				
Scrubber Sump Vessel 11	Liquid Level	LI-0409		22"	22 59"	59"			Overflow is at 65" (Note 4) 11
Scrubbing Liquid 11	pH		pH	7*	7.0 - 7.5*	7.5*			
Scrubbing Liquid	Density 11	DI-1704	lbs/ft^3	*	62.3*	*			
Recirc. to sump - mixing 11	Flow Rate	FI-0461	GPM		60*				
Recirc. to sump - mixing	Temperature		°F		70				
Recirc. to packing - scrubbing	Flow Rate	FI-0444	GPM		60*				
Recirc. to packing - scrubbing	Temperature		°F		70				
Deleted									
Deleted									
Deleted									
Deleted									
Deleted									
Packed Section	Pressure Drop	PDI-0406	W.G.		3.0"*	6.0"*	11		Max. allowable (Note 1)
Demineralized Water Inlet at Nozzle N06	Flow Rate		GPM	N.A.	22.5*	N.A.	11		
Dry Packing	Pressure Drop	PDI-0407	W.G.		0.2*	1.0"*	11		Max. allowable (Note 1)
Demineralized Water Inlet at Nozzle N07	Flow Rate		GPM	N.A.	22.5*	N.A.	11		Mfr. Suggests a periodic flush of 1 GPM/sq. ft. min.
Outlet Offgas	Pressure		W.G.	-47.0"	-42.0"	-17"			
Outlet Offgas	Temperature		°F	77	77	77			
Outlet Offgas	Mass Flow Rate		kg/hr	*	*	*	11		
Outlet Offgas	Flow Rate		SCFM		3600	3600			
Outlet Offgas	Rel. Humidity		%		100	100			
Outlet Offgas	NO_2		ppm vol		41*		11		Dry basis concentration
Outlet Offgas	NO		ppm vol		70*		11		Dry basis concentration
Outlet Offgas	CO_2		ppm vol		329*	11			Dry basis concentration
DF (minimum) for Nitrogen Oxides			DF		1.8*	11			
DF (minimum) for Solid Particulates			DF		3.5*	11			2.0 micron particulates

Notes for Process Data

* - Seller to verify/provide data considering aerosol loading against existing design specifications and provide recommended process
changes/EQPT changes as necessary 11
1 - Maximum differential pressure across scrubber in clean condition shall not exceed 8 in-WG. Seller to provide data.
2 - Standard conditions of flow are 77 deg F and 1 atmosphere as dry air (density = 0.074 lb/ft3) - humidity accounts for additional volume and mass flow
3 - Deleted
4- Dimension is measured from inside bottom of vessel sump to bottom of nozzle N12.
5- Deleted 11

BECHTEL	**Mechanical Data Sheet:** **PTF Vessel Vent Caustic Scrubber**	Plant Item Number 24590-PTF-MK-PVP-SCB-00002 Data Sheet Number 24590-PTF-MKD-PVP-00002, Rev 11

Equipment Cyclic Data Sheet

The information below is provisional and envelopes operational duty for fatigue assessment. It is not to be used as operational data.

Design Life	*40 Years*
Component Function and Life Cycle Description	*See Specification 24590-PTF-3PS-MKAS-T0001*

Load Type		Min	Max	Number of Cycles	Comments
Design Pressure	PSIG	-5	+15	10	*WTP Calculation 24590-PTF-MVC-10-00003*
Operating Pressure 1	PSIG	-1.5	0	7,000,000	*WTP Calculation 24590-PTF-MVC-10-00003*
Operating Pressure 2	PSIG	0	+2.8	40	*WTP Calculation 24590-PTF-MVC-10-00003*
Operating Temperature	°F	59	140	40	*WTP Calculation 24590-PTF-MVC-10-00003*
Contents Specific Gravity		1.0	1.04	2,080	*WTP Calculation 24590-PTF-MVC-10-00003*
Contents Level	inch	23	63	29,200	*WTP Calculation 24590-PTF-MVC-10-00003*
Localized Features					
Nozzles		*N/A*		*WTP Calculation 24590-PTF-MVC-10-00003*	
Deleted		*Deleted*		*Deleted*	

Equipment Cyclic Data Sheet Notes

1. Cycle increase: The Seller must increase the numbers of operational cycles given above by 10% to account for commissioning duty unless otherwise noted.

Nozzle Loads

Nozzle Number	Nozzle Size (in)	Design Nozzle Pressure (psig) (Note E)	Design Nozzle Temp (°F) (Note E)	Orientation (V* / H**)	Load Case	Design Loads (Force in lbs, Moment in ft-lb) Fx	Fy	Fz	Mx	My	Mz
N01	24	15	200	H	Weight	1200	2195	1200	8250	5153	8982
					Seismic	8325	5573	8325	72075	108000	108000
					Thermal	6300	8336	5801	33900	67800	67800
N02	24	15	150	V	Weight	1200	1928	1200	8250	5153	5153
					Seismic	8325	5573	8325	72075	108000	108000
					Thermal	3930	3495	5243	33900	67800	67800
N03	2	117	150	V	Weight	50	60	50	75	75	75
					Seismic	244	162	244	398	597	597
					Thermal	104	92	138	169	337	337
N04	2	117	150	H	Weight	50	60	50	75	75	75
					Seismic	244	162	244	398	597	597
					Thermal	104	92	138	169	337	337
N05	4	124	150	V	Weight	90	144	90	257	161	161
					Seismic	626	418	626	2220	3330	3330
					Thermal	359	236	493	945	1890	1890
N06	2" (OD)	124	100	H	Weight	35	35	35	40	40	40
					Seismic	138	92	138	228	342	342
					Thermal	58	52	78	96	192	192
N07	2" (OD)	124	100	H	Weight	35	41	35	40	40	60
					Seismic	138	92	138	228	342	342
					Thermal	58	52	78	96	192	192
N08	1.5	167	120	V	Weight	35	67	35	40	40	40
					Seismic	138	92	138	228	342	364
					Thermal	58	52	78	96	192	192
N11	2" (OD)	119	150	V	Weight	35	35	35	40	40	40
					Seismic	138	92	138	228	342	342
					Thermal	58	52	78	96	192	192
N12	6	15	150	H	Weight	218	347	218	714	447	447
					Seismic	1519	1013	1519	6218	9300	9300
					Thermal	657	1541	878	2685	5370	5370
N13	6	15	150	Parent	Weight	N13 is parent nozzle, nozzle loads are applied via N13A, N13B, N13C					
					Seismic						
					Thermal						
N13A (Note C)	1	15	150	V	Weight	15	20	15	20	20	20
					Seismic	66	44	66	92	137	137
					Thermal	28	24	38	38	77	77
N13B (Note C)	1	15	150	V	Weight	15	20	15	20	20	20
					Seismic	66	44	66	92	137	137
					Thermal	28	24	38	38	77	77
N13C (Note C)	1	15	150	V	Weight	15	20	15	20	20	20
					Seismic	66	44	66	92	137	137
					Thermal	28	24	38	38	77	77
N14 Spare	3	15	150	V	Weight	54	85	54	135	84	84
					Seismic	369	246	369	1178	1763	1763
					Thermal	157	139	209	498	998	998
N15	2" (OD)	15	150	V	Weight	35	35	35	40	40	40
					Seismic	138	92	138	228	342	342
					Thermal	58	52	78	96	192	192

BECHTEL	**Mechanical Data Sheet:** **PTF Vessel Vent Caustic Scrubber**	Plant Item Number 24590-PTF-MK-PVP-SCB-00002 Data Sheet Number 24590-PTF-MKD-PVP-00002, Rev 11

Nozzle Number	Nozzle Size (in)	Design Nozzle Pressure (psig) (Note E) 11	Design Nozzle Temp (°F) (Note E) 11	Orientation (V* / H**)	Load Case	Design Loads (Force in lbs, Moment in ft-lb)					
						Fx	Fy	Fz	Mx	My	Mz
N16	2" (OD) 11	15	150	H	Weight	35	35	35	40	40	40
					Seismic	138	92	138	228	342	342
					Thermal	58	52	78	96	192	192
N17	2" (OD) 11	15	150	H	Weight	35	35	35	40	40	40
					Seismic	138	92	138	228	342	342
					Thermal	58	52	78	96	192	192
N18	2" (OD) 11	15	150	H	Weight	35	35	35	40	40	40
					Seismic	138	92	138	228	342	342
					Thermal	58	52	78	96	192	192

Notes for Nozzle Loads 11

A. Direction of load application for shell nozzles is per diagrams in 24590-WTP-3PS-MV00-T0001, Appendix A.
B. For nozzles in head: x = North/South, y = Vertical, and z = East/West - 0° defined as North.
C. Values provided at plate on top of parent nozzle.
D. Nozzle loads shown are to be used in place of those specified in 24590-WTP-3PS-MV00-T0001 - do not apply any thermal reduction factors.
E. Design Pressures and Temperatures for qualification of nozzles only.
F. All Pretreatment RGM Seismic Piping Nozzles loads from Plant design shall have a 1.75 load factor applied to all loads to address coupling effects between the flexible vessels and piping in accordance with the Seismic Classification and Evaluation for the Pretreatment Facility Piping and Vessels, 24590-WTP-RPT-ENG-09-040.

EQUIPMENT QUALIFICATION DATASHEET (EQD)

Equipment Identification		
Full Component Tag Number or BNI Stock Code Number	24590-PTF-MK-PVP-SCB-00002	Safety Classification ☒ SC ☐ SS ☐ APC-PAM
Equipment Datasheet Number	24590-PTF-MKD-PVP-00002	
Description	Vessel Vent Caustic Scrubber for the Pretreatment Vessel Vent Process System (PVP)	Seismic Category ☒ SC-I ☐ SC-II ☐ SC-III ☐ SC-IV ☐ SC-III Seismic Interaction only
Location (Facility / Building and Room No.)	PTF Building: located in Room P-0104, Elev. 0'-00", column lines K/16	
Safety Function(s)	Provide confinement of PVP exhaust during normal and upset conditions. Reference: 24590-WTP-PSAR-ESH-01-002-02, Preliminary Documented Safety Analysis to Support Construction Authorization; PT Facility Specific Information.	
Equipment Safety Function Type	☒ Passive Mechanical	☐ Active Mechanical See E-Note 6 ☐ Electrical
Seismic Safety Function ☒ Yes ☐ No	Seismic Operability Requirements ☒ During Seismic Event	☒ After Seismic Event ☐ None

Equipment Environmental Qualification (EEQ)

(Parameter values stated in this section do not include process conditions or operation induced conditions)

Classification of Environment ☒ Mild ☐ Harsh

Qualified Life (years) ☒ 40 ☐ Other
See E-Note 7

Parameter Type/Units	Parameter Value	Parameter Duration (number)	Duration Units	WTP Source Document Number
Normal Ambients				
High Temperature (°F)	113	Note a	Years	24590-PTF-U0D-W16T-00001, E-Note 1
Low Temperature (°F)	59	Note b	N/A	24590-PTF-U0D-W16T-00001, E-Note 1
High Relative Humidity (%RH)	90	Note c	N/A	24590-PTF-U0D-W16T-00001, E-Note 1
Low Relative Humidity (%RH)	5	Note c	N/A	24590-PTF-U0D-W16T-00001, E-Note 1
High Pressure (in.-w.g.)	0 (E-Note 2)	Note d	N/A	24590-PTF-U0D-W16T-00001, E-Note 1
Low Pressure (in.-w.g.)	(-) 1.4 (E-Note 2)	Note d	N/A	24590-PTF-U0D-W16T-00001, E-Note 1
Radiation Dose Rate (mRad/hr)	533000 (E-Note 4)	40 (E-Note 3)	Years (Note e-1)	24590-PTF-U0D-W16T-00001, E-Note 1
Plant/Process Induced Vibration	☐ Yes ☒ No			
Additional Normal Ambient Information:	N/A			

Equipment Environmental Qualification (EEQ) *(continued)*

Parameter Type/Units	Parameter Value	Parameter Duration (number)	Duration Units	WTP Source Document Number
Abnormal Ambients				
High Temperature (°F)	127	8	hours / year	24590-PTF-U0D-W16T-00001, E-Note 1
Low Temperature (°F)	40	Note b	N/A	24590-PTF-U0D-W16T-00001, E-Note 1
High Relative Humidity (%RH)	100c	Note c	N/A	24590-PTF-U0D-W16T-00001, E-Note 1
Low Relative Humidity (%RH)	6	Note c	N/A	24590-PTF-U0D-W16T-00001, E-Note 1
High Pressure (in.-w.g)	4 (E-Note 2)	Note d	N/A	24590-PTF-U0D-W16T-00001, E-Note 1
Low Pressure (in.-w.g)	(-) 7.3 (E-Note 2)	Note d	N/A	24590-PTF-U0D-W16T-00001, E-Note 1
Radiation Dose Rate (mR/hr)	533000 (E-Note 4)	0 (E-Note 3)	Years (Note e-1)	24590-PTF-U0D-W16T-00001, E-Note 1
Exposure to Wet Sprinkler System	☐ Yes ☒ No	N/A	hours	24590-PTF-U0D-W16T-00001, E-Note 1
Additional Abnormal Ambient Information	N/A			
Design Basis Events (DBE) Ambients				
High Temperature (°F)	135	1000	hours	24590-PTF-U0D-W16T-00001, E-Note 1
Low Temperature (°F)	40	Note b	N/A	24590-PTF-U0D-W16T-00001, E-Note 1
High Relative Humidity (%RH)	100c	40	hours	24590-PTF-U0D-W16T-00001, E-Note 1
Low Relative Humidity (%RH)	6	1000	hours	24590-PTF-U0D-W16T-00001, E-Note 1
High Pressure (in.-w.g)	4	8	hours	24590-PTF-U0D-W16T-00001, E-Note 1
Low Pressure (in.-w.g)	(-) 7.3 (E-Note 2)	1000	hours	24590-PTF-U0D-W16T-00001, E-Note 1
Radiation Dose Rate (mR/hr)	533000 (E-Note 4)	0 (E-Note 3)	hours	24590-PTF-U0D-W16T-00001, E-Note 1
Submergence	☐ Yes ☒ No	N/A	hours	24590-PTF-U0D-W16T-00001, E-Note 5
Chemical/Spray Exposure	☒ Yes ☐ No	12.5	hours	24590-PTF-U0D-W16T-00001, E-Note 1
Additional DBE Information	N/A			

DBE Chemical Exposure Details	
DBE Chemical Types / Concentrations	Process Rad Condensate Nitric Acid (2M) Sodium Hydroxide (2M) Sodium Permanganate (1M) Strontium Nitrate (1M)

EQUIPMENT QUALIFICATION DATASHEET (EQD)

DBE Chemical Exposure Details	
	Water

Electrical Interfaces Supporting the Safety Function	
Power Supply Voltage (VAC, VDC)	N/A
Power Supply Frequency (Hz)	N/A
Power Connection Method	N/A
I/O Signals to/from Equipment	N/A
I/O Connection Method	N/A

Mechanical Interfaces	
Mounting Configuration (orientation)	Vertically, see 24590-PTF-P1-P23T-00105
Mounting Method (bolts, welds, etc.)	Welded, see 24590-QL-POA-MKAS-00002-02-00011 and 24590-PTF-DD-S13T-00028
Auxiliary Devices	N/A

Equipment Seismic Qualification (ESQ)				
Parameter	Title	Reference/Document Number	Version / Revision	Remarks
WTP Seismic Design Specification	Engineering Specification for Seismic Qualification of Seismic Category I/II Equipment and Tanks Engineering Specification for Seismic Qualification Criteria for Pressure Vessels	24590-WTP-3PS-SS90-T0001 24590-WTP-3PS-MV00-T0002	2 2	N/A
Specified Seismic Load Parameters	Seismic Analysis of Pretreatment Building - WSGM In-Structure Response Spectra (ISRS)	24590-PTF-S0C-S15T-00057	A	CCN: 214812; WSGM ISRS Curves: Figures 37, 38, 39, 67, 68, and 69.

Equipment Qualification Notes and Additional Information

Note a) For thermal aging, the high normal temperature shall be assumed to subsist for 40 years less the duration of the high abnormal temperature. For any lesser qualified life, the normal and abnormal condition durations shall be assigned proportionally. The abnormal temperature is stated to subsist for a certain number of hours per year. It shall be taken to subsist for this number of hours for each year of the qualified life.

Note b) The ability to provide the safety function at the low normal temperature, the low abnormal temperature or the low DBE temperature (whichever be the lowest) shall be established by test, analysis, or operating experience. The thermal aging at these respective low temperatures will be conservatively covered by the thermal aging per item a) above. Therefore, no duration is assigned for the low temperatures.

Note c) The ability to provide the safety function at the extremes of the normal and abnormal humidity conditions, taking into consideration the high and the low normal and high and low abnormal, shall be established by test, analysis, or operating experience. No duration is assigned for the normal and abnormal humidity conditions.

Note d) If the performance of the safety function of the equipment is affected by ambient pressure, the ability to provide the safety function at the extremes of the normal and abnormal pressure conditions, taking into consideration the high and the low normal and the high and low abnormal pressures, shall be established by test, analysis, or operating experience. No duration is assigned to the normal and abnormal pressure conditions.

Equipment Qualification Notes and Additional Information

Note e) (1) If the abnormal radiation dose rate is the same as the normal radiation dose rate, the normal radiation dose rate shall be assumed to subsist for 40 years, or any lesser qualified life, and the duration of the abnormal radiation dose rate is "0."

(2) If the abnormal radiation dose rate is higher than the normal radiation dose rate, the abnormal radiation dose rate shall be assumed to subsist for 40 years, or any lesser qualified life, and the duration of the normal radiation dose rate is "0."

Note f) The DBE conditions shall be taken to subsist for the stated number of hours following the qualified life of the equipment.

Note g) Spray due to fire sprinkler actuation shall be taken to occur once over the entire qualified life duration for a period of 2 hours, even if the qualified life is a period less than 40 years. If spray qualification is provided for DBE conditions (whether for water or chemical spray), then separate qualification for the fire sprinkler spray need not be provided.

Note h) The values stated in this EQD are the ambients and do not include the thermodynamic and radiation conditions imposed by the process fluids, self-heating, etc. The data pertaining to process fluid and service induced parameters are to be taken into account where significant, such as in thermal aging analyses. These data can be obtained from the equipment data sheets or the Equipment Specification.

Note i) Equipment that is to be installed in inaccessible locations must be qualified to a 40-year life without the need for maintenance or replacement.

E-Note 1: BNI (BUYER) shall perform Equipment Environmental Qualification in accordance with 24590-WTP-DC-ENG-06-001, Design Criteria for Equipment Seismic and Environmental Qualification.

E-Note 2: Where pressure is given in inches of water column (in-w.c.) in the source document, it is generally assumed that this is in reference to atmospheric pressure and is therefore equivalent to inches of water gage (in-w.g.).

E-Note 3: Normal, Abnormal, and DBE dose rates are the same, therefore, abnormal and DBE doses do not add to total integrated dose based on normal dose rates over 40 years.

E-Note 4: Radiation Dose Rates are for determining shielding requirements only for the black cell and are not at the source (vessel). Since the vessel is all metallic and the source has no neutron components for material embrittlement, the dose rates are of no concern on the vessel or its subcomponents.

E-Note 5: Flood height is 2.08 ft above the floor, bottom of vessel is above this level therefore, no submergence evaluation is required.

E-Note 6: Seller to provide input for internals/sprays.

E-Note 7: Seller to provide input for design life.

E-Note 8: Seller to provide Equipment Seismic Qualification (ESQ).

EQUIPMENT QUALIFICATION DATASHEET (EQD)

DOE Radioactive Materials Disclaimer:
Please note that source, special nuclear and byproduct materials, as defined in the Atomic Energy Act of 1954 (AEA), are regulated at the US Department of Energy (DOE) facilities exclusively by DOE acting pursuant to its AEA authority. DOE asserts, that pursuant to the AEA, it has sole and exclusive responsibility and authority to regulate source, special nuclear, and byproduct materials at DOE-owned nuclear facilities. Information contained herein on radionuclides is provided for process description purposes only.

Screening / Evaluation Required? If yes per 24590-WTP-GPP-SREG-002, E&NS signature required below	X	Yes		No

Approval

Rev	Description	System Engineer	Vessel Engineer	Checked	Reviewed / MET	E&NS	Approved	Date
0	Issued for Bid	A Molina/ J Dave	K W Chin	U Sen/ J Julyk	N/A	N/A	M Hoffmann	12/18/02
1	Issued for Purchase	T A Lix	N Sentanu C Morley	A Molina	N/A	N/A	J Julyk	10/22/03
2	Reissued for Purchase	T A Lix	K W Chin/ C Morley	A Molina	N/A	N/A	J Julyk	11/12/03
3	Added Black Cell Requirements	E Strieper	K W Chin/ C Morley	A Molina J Julyk	N/A	N/A	M Hoffmann	04/15/04
4	Deleted scrubber cooling jacket. Revised scrubber heat duty, inlet and outlet temperatures, and vent gas flow rate.	J Dave	K W Chin/ C Morley	A Molina	N/A	N/A	J Julyk/ M Hoffmann	08/04/04
5	Seismic category and design revised. Environmental qualification added. Connecting pipes details	J Dave	B Domgan/ C Morley	A Molina	N/A	N/A	J Julyk/ M Hoffmann	03/29/05
6	Revised to comply with CODE 1 vendor submittal 24590-QL-POA-MKAS-00002-03-00001, in accordance with 24590-WTP-CAR-QA-05-120. Added liquid density.	J Dave	D Pease	D Rickettson/ C Morley	N/A	N/A	J Julyk	11/27/05
7	QL-2 revised to Q, per simplified quality system. Revised data sheet to add fatigue and cyclic blocks. Added note 10 DWP Affected. Fixed typo in Note 4. Revised Note 5 of "notes for Outline Profile of the PTF Vessel Vent Caustic Scrubber" to include: Ring Beam design details and NDE requirements from ANSI/AISC N690 for ring beam. Added note to N03 "Dip Pipe". Noz N13 on scrubber outline moved to correct location.	J Dave	D J Rickettson	N Johnson	N/A	N/A	J Julyk	03/18/06
8	Rev scrubber dims D, E and F to agree with fab dims. Add vessel drawing number.Add signature column for E&NS. Deleted fatigue and cyclic blocks from page one. Add Equip Cyclic data page 6.Cyclic data on hold. Added Ref Calc. Rev pres on page 5.Rev overflow pg 5 based on fab dim.Incorp 24590-WTP-SDDR-M-06-00132 Rev n/a	J Dave/ C Sarka	D J Rickettson	L Donovan	N/A	G Hendricks	J Julyk	07/24/06
9	Deleted Rev for P&ID on page 1. Added ref # for applicable data. Deleted Seismic Base Moment and hydro test pres on page 1. Moved matl of const to page 2. Revised note 10 wording page 2. Added note 11 on page 2. Added ref Table on page 2. Deleted hold on cyclic data on page 6. Deleted support note on cyclic data page 6.	J Dave/ C Sarka	D J Rickettson	R P Hills	N/A	J Cook	J Julyk	07/24/06

EQUIPMENT QUALIFICATION DATASHEET (EQD)

Rev	Description	System Engineer	Vessel Engineer	Checked	Reviewed / MET	E&NS	Approved	Date
10	Added Environmental Qualification Data (EQD) and DOE disclaimer (pages 7-11). Moved E&NS statement and revision history table to pages 10-11. Added nozzle loads and notes for nozzle loads. Added note 17 per 24590-WTP-GPP-SANA-001. Revised cyclic loads data and process data pages 4-5. Incorporated 24590-WTP-M6N-M80T-00002.	C R Zook	J Czamecki	C Chung	N/A	J Brown	J Julyk	12/03/08
11	Revised as noted by revision triangles. Revised Equipment Qualification data, implemented new EQ form and renumbered/revised EQ additional notes section (e.g., E-Note 1). Added design pressures and temperatures for Nozzle Loads and revised notes for Nozzle Loads. Revised Seismic Category to SC-I. Incorporated CCN 222995. Supersedes 24590-PTF-MKD-PVP-P0002, Rev 3.	Ryan Wilson	Kuldip Singh 11/24/10	Mike Seed	Debbie Adler	John Hinckley	John Julyk	1/4/11

REFERENCES for Data Sheet: 24590-PTF-MKD-PVP-00002, Rev 11

Plant Item No: 24590-PTF-MK-PVP-SCB-00002

(For BNI Use Only)

Data	Document No	Rev	Document Title
Quality Level	24590-PTF-M6-PVP-00017001	0	*P&ID - PTF Pretreatment Vessel Vent Process System Caustic Scrubber PVP-SCB-00002.* (24590-PTF-M6N-PVP-00062)
Seismic Category	24590-PTF-M6-PVP-00017001	0	*P&ID - PTF Pretreatment Vessel Vent Process System Caustic Scrubber PVP-SCB-00002.* (24590-PTF-M6N-PVP-00062)
PTF Room No	24590-PTF-U0D-W16T-00001	2	*PTF Room Environment Data Sheet.* (P-0104)
Contamination Class	24590-PTF-U0D-W16T-00001	2	*PTF Room Environment Data Sheet.* (C5, P-0104)
Radiation Class	24590-PTF-U0D-W16T-00001	2	*PTF Room Environment Data Sheet.* (R5, P-0104)
Service/Contents	24590-PTF-3YD-PVP-00001	1	*System Description For Pretreatment Vessel Vent Process System, PVP.* (Radioactive Liquid [Substances], Sections 4.1 and 4.3)
Design (Maximum) Specific Gravity	24590-PTF-MVC-10-00003 24590-QL-POA-MKAS-00002-02-00011	C F	*PTF Vessel Cyclic Data Sheet Inputs.* (Sheet A-5) *Drawing - PTF Vessel Vent Caustic Scrubber - Assembly & Sections*
Maximum Operating Volume	24590-QL-POA-MKAS-00002-05-00003	C	*Pretreatment Facility Vessel Vent Caustic Scrubber Operating Instructions*
Total Volume	24590-QL-POA-MKAS-00002-05-00003	C	*Pretreatment Facility Vessel Vent Caustic Scrubber Operating Instructions*
Packed Column Inside Diameter	24590-QL-POA-MKAS-00002-03-00001 24590-QL-POA-MKAS-00002-02-00011	E F	*Data Sheet - Mechanical Data Sheet PTF Vessel Vent Caustic Scrubber* *Drawing - PTF Vessel Vent Caustic Scrubber - Assembly & Sections*
Sump Vessel Inside Diameter	24590-QL-POA-MKAS-00002-03-00001 24590-QL-POA-MKAS-00002-02-00011	E F	*Data Sheet - Mechanical Data Sheet PTF Vessel Vent Caustic Scrubber* *Drawing - PTF Vessel Vent Caustic Scrubber - Assembly & Sections*
Dimension "D" Total Height	24590-QL-POA-MKAS-00002-02-00011	F	*Drawing - PTF Vessel Vent Caustic Scrubber - Assembly & Sections*
Dimension "E" Floor To Bottom Of Sump	24590-QL-POA-MKAS-00002-02-00011	F	*Drawing - PTF Vessel Vent Caustic Scrubber - Assembly & Sections*
Dimension "F" Floor To Top Of Scrubber	24590-QL-POA-MKAS-00002-02-00011	F	*Drawing - PTF Vessel Vent Caustic Scrubber - Assembly & Sections*
Dimension "G" Ring Beam Height	24590-QL-POA-MKAS-00002-02-00011	F	*Drawing - PTF Vessel Vent Caustic Scrubber - Assembly & Sections*
Dimension "H" Ring Beam Center To Center Diameter	24590-QL-POA-MKAS-00002-03-00001 24590-QL-POA-MKAS-00002-02-00011	E F	*Data Sheet - Mechanical Data Sheet PTF Vessel Vent Caustic Scrubber.* (Based On Sump Vessel Inside Diameter) *Drawing - PTF Vessel Vent Caustic Scrubber - Assembly & Sections*

11

Corrosion Allowance	24590-PTF-N1D-PVP-00001	6	*PVP-SCB-00002 PTF Vessel Vent Caustic Scrubber.* (0.04 Inch (0.024 Corrosion + 0.004 Erosion)
Minimum Design Temperature For Metal	24590-WTP-DB-ENG-01-001	IP	*Basis Of Design.* Table 4-4, -20F (Minus 20F Degrees). See Note 1
Vessel Internal Operating Pressure	24590-PTF-M6C-PVP-00017	A	*HADCRT Analysis Of PTF PVP System At Various Operating Scenarios. Section 8.2.1(-35" WG converts to -1.3 psig. Use 1.5 psig conservative)*
Vessel Internal Design Pressure	24590-PTF-M6C-PVP-00017	A	*HADCRT Analysis Of PTF PVP System At Various Operating Scenarios. Section 8.2.1(-135" WG fan suction equivalent to -.50 psig conservative)*
Vessel Operating Temperature	24590-PTF-MVC-10-00003	C	*PTF Vessel Cyclic Data Sheet Inputs.* Sheet A-5
Vessel Design Temperature	24590-PTF-MVC-10-00003	C	*PTF Vessel Cyclic Data Sheet Inputs.* Sheet A-5
Materials of Construction	24590-PTF-N1D-PVP-00001	6	*PVP-SCB-00002 PTF Vessel Vent Caustic Scrubber*
Scrubber Dry Weight	24590-QL-POA-MKAS-00002-03-00001	E	*Data Sheet - Mechanical Data Sheet PTF Vessel Vent Caustic Scrubber*
Scrubber Dry CG (Inches X,Y,Z)	24590-QL-POA-MKAS-00002-03-00001	E	*Data Sheet - Mechanical Data Sheet PTF Vessel Vent Caustic Scrubber*
Scrubber Operating Weight	24590-QL-POA-MKAS-00002-03-00001	E	*Data Sheet - Mechanical Data Sheet PTF Vessel Vent Caustic Scrubber*
Scrubber Operating CG (Inches X,Y,Z)	24590-QL-POA-MKAS-00002-03-00001	E	*Data Sheet - Mechanical Data Sheet PTF Vessel Vent Caustic Scrubber*
Packing Column Dry Weight	24590-QL-POA-MKAS-00002-03-00001	E	*Data Sheet - Mechanical Data Sheet PTF Vessel Vent Caustic Scrubber*
Packing Column Dry CG (Inches X,Y,Z)	24590-QL-POA-MKAS-00002-03-00001	E	*Data Sheet - Mechanical Data Sheet PTF Vessel Vent Caustic Scrubber*
Packing Column Operating Weight	24590-QL-POA-MKAS-00002-03-00001	E	*Data Sheet - Mechanical Data Sheet PTF Vessel Vent Caustic Scrubber*
Packing Column Operating CG (Inches X,Y,Z)	24590-QL-POA-MKAS-00002-03-00001	E	*Data Sheet - Mechanical Data Sheet PTF Vessel Vent Caustic Scrubber*
Sump Vessel Dry Weight	24590-QL-POA-MKAS-00002-03-00001	E	*Data Sheet - Mechanical Data Sheet PTF Vessel Vent Caustic Scrubber*

11

REFERENCES for Data Sheet: 24590-PTF-MKD-PVP-00002, Rev 11
Plant Item No: 24590-PTF-MK-PVP-SCB-00002

(For BNI Use Only)

11

Sump Vessel Dry CG (Inches X,Y,Z)	24590-QL-POA-MKAS-00002-03-00001	E	*Data Sheet - Mechanical Data Sheet PTF Vessel Vent Caustic Scrubber*
Sump Vessel Operating Weight	24590-QL-POA-MKAS-00002-03-00001	E	*Data Sheet - Mechanical Data Sheet PTF Vessel Vent Caustic Scrubber*
Sump Vessel Operating CG (Inches X,Y,Z)	24590-QL-POA-MKAS-00002-03-00001	E	*Data Sheet - Mechanical Data Sheet PTF Vessel Vent Caustic Scrubber*
Scrubber Testing Weight	24590-QL-POA-MKAS-00002-03-00001	E	*Data Sheet - Mechanical Data Sheet PTF Vessel Vent Caustic Scrubber*
Scrubber Shipping Weight	24590-QL-POA-MKAS-00002-03-00001	E	*Data Sheet - Mechanical Data Sheet PTF Vessel Vent Caustic Scrubber*
Scrubber Orientation	24590-QL-POA-MKAS-00002-03-00001	E	*Data Sheet - Mechanical Data Sheet PTF Vessel Vent Caustic Scrubber*
Support Design	24590-QL-POA-MKAS-00002-03-00001	E	*Data Sheet - Mechanical Data Sheet PTF Vessel Vent Caustic Scrubber*
Containment Classification	WTP 24590-3PS-MV00-T0001. KS 1/4/11	3	Pressure Vessel Design And Fabrication, Section 1.2.6
Design Life	24590-PTF-3YD-PVP-00001	1	*System Description For Pretreatment Vessel Vent Process System, PVP*, Section 4.3
Dangerous Waste	24590-PTF-3YD-PVP-00001	1	*System Description For Pretreatment Vessel Vent Process System, PVP*, Section 4.3 And Section 9.1.2
Nozzle Data (e.g., Nozzle No, Nozzle Size, Connecting Pipe, Connecting Pipe Schedule (Pipe Wall Thickness)	24590-QL-POA-MKAS-00002-02-00012 24590-QL-POA-MKAS-00002-02-00020	F E	*Drawing - PTF Vessel Vent Caustic Scrubber - Column Assembly & Details* *Drawing - PTF Vessel Vent Caustic Scrubber - Sump Assembly & Details*
Load Type			
Design Pressure	24590-PTF-MVC-10-00003	C	*PTF Vessel Cyclic Data Sheet Inputs*, Sheet A-5
Operating Pressure 1	24590-PTF-MVC-10-00003	C	*PTF Vessel Cyclic Data Sheet Inputs*, Sheet A-5
Operating Pressure 2	24590-PTF-MVC-10-00003	C	*PTF Vessel Cyclic Data Sheet Inputs*, Sheet A-5
Operating Temperature	24590-PTF-MVC-10-00003	C	*PTF Vessel Cyclic Data Sheet Inputs*, Sheet A-5
Content Specific Gravity	24590-PTF-MVC-10-00003	C	*PTF Vessel Cyclic Data Sheet Inputs*, Sheet A-5
Content Level	24590-PTF-MVC-10-00003	C	*PTF Vessel Cyclic Data Sheet Inputs*, Sheet A-5
Nozzle Loads	123005	N/A	*Nozzle Design Loads for PVP-SCB-00002*
Nozzle Design Pressure and Temperature	24590-PTF-M6X-PVP-00047	0	*MS Line List For P&ID 24590-PTF-M6-PVP-00017001*

(For BNI Use Only)

Notes:

Note 1: Per discussions between the previous Responsible Engineer (RE) Dennis Rickettson and current Responsible Engineer (RE) Kuldip Singh the "Minimum Design Temperature For Metal of -20F (Minus 20F Degrees)" is most likely based on Hanford Site Climatological Data in 24590-WTP-DB-ENG-01-001, Table 4-4 as follows: 11

Ambient Air Temperature Minimum -23F (Minus 23F Degrees) and Maximum 113F

R11087306

ISSUED BY
RPP-WTP PDC

RIVER PROTECTION PROJECT – WASTE TREATMENT PLANT

ENGINEERING SPECIFICATION

FOR

PTF Vessel Vent Caustic Scrubber

Please note that source, special nuclear, and byproduct materials, as defined in the Atomic Energy Act of 1954 (AEA) are regulated at the U. S. Department of Energy (DOE) facilities exclusively by DOE acting pursuant to its AEA authority. DOE asserts that pursuant to AEA, it has sole and exclusive responsibility and authority to regulate source, special nuclear, and byproduct materials at DOE-owned nuclear facilities. Information contained herein on radionuclides is provided for process description purposes only.

Content applicable to ALARA? ☒ **Yes** ☐ **No**

ADR No.
24590-PTF-ADR-M-02-057

Rev
1

Quality Level
Q
DOE Contract No. DE-AC27-01RV14136

NOTE: Contents of this document are Dangerous Waste Permit affecting.

2	6/24/09	J Czarnecki	M Seed	B Makadia	B Erlandson	N/A	J Julyk
1	07/24/06	D Rickettson	L Donovan	B Makadia	J Hendricks	W Dey	J Julyk
0	07/24/03	Kar Wei Chin	N Sentanu	C Morley	N/A	G Warner	M Hoffman for G Duncan
REV	**DATE**	**BY**	**CHECK**	**REVIEW**	**E&NS**	**QA**	**DPEM**

SPECIFICATION No.
24590-PTF-3PS-MKAS-T0001

Rev
2

Revision History

Revision	Reason for Revision
0	Issued for Purchase
1	Incorporated SCN's, 24590-PTF-3PN-MKAS-00001, 24590-PTF-3PN-MKAS-00002, & 24590-PTF-3PN-MKAS-00003. Added ANSI / AISC N690 NDE for ring beam, specifications for lateral restraint and Seismic Anchor Motions (SAM). Added Specification for Pressure Vessel Fatigue Analysis.
2	Administrative update to source document to incorporate outstanding changes and supersede permit document no longer required by Project. Incorporated 24590-PTF-3PN-MKAS-00004. Supersedes 24590-PTF-3PS-MKAS-TP001, Rev 1.

Contents

1 Scope 1
1.1 Project Description and Location 1
1.2 Equipment, Material, and Services Required 1
1.3 Work by Others 1
1.4 Acronyms, Abbreviations and Definitions 2
1.5 Safety/Quality Classifications 3
2 Applicable Documents 3
2.1 General 3
2.2 Codes and Standards 4
2.3 Reference Documents/Drawings 4
3 Design Requirements 5
3.1 General 5
3.2 Basic Description 7
3.3 Performance 8
3.4 Scrubber Design and Standard Details 8
3.5 Environmental Conditions 9
3.6 Loading 9
3.7 Instrumentation and Control Requirements 10
3.8 Accessibility and Maintenance 10
3.9 Lateral Restraint for scrubber at elevation 41'-6" 10
4 Materials 11
4.1 General 11
4.2 Prohibited Materials 12
5 Fabrication 12
5.1 General 12
5.2 Welding 12
6 Tests and Inspections 13
6.1 General 13
7 Preparation for Shipment 13
7.1 General 13
7.2 Tagging 14
7.3 Shipping, Handling and Storage Instructions 14
8 Quality Assurance 14
8.1 General Requirements 14

8.2 **Quality Related Components** 14

9 **Configuration Management** 15

9.1 The equipment covered by this specification is identified with the plant item number shown in the MDS. The equipment shall be identified in accordance with section 7.2, Tagging, of this specification. 15

9.2 Substitutions and deviations shall be in accordance with section 2.6 of the MR. 15

10 **Documentation and Submittals** 15

10.1 **General** 15

10.2 **Calculations** 16

10.3 **Schedules** 16

1 Scope

1.1 Project Description and Location

The Hanford Tank Waste Treatment and Immobilization Plant (WTP) is a complex of waste treatment facilities where the US Department of Energy (DOE) Hanford Site tank waste will be pretreated and immobilized into a stable glass form via vitrification. The WTP contractor will design, build, and start up the WTP pretreatment and vitrification facilities for the DOE Office of River Protection (ORP).

The Hanford Site occupies an area of about 560 square miles along the Columbia River, north of Richland, WA in the USA. The WTP facilities will be constructed at the 200 East Area of the Hanford Site. The site elevation varies from 662 feet to 684 feet above mean sea level.

1.2 Equipment, Material, and Services Required

This specification establishes the minimum requirements for the performance, design, analysis, materials, fabrication, testing, inspection, quality assurance (QA), qualification, documentation, and preparation for shipment of the Vessel Vent Caustic Scrubber, plant item number 24590-PTF-MK-PVP-SCB-00002, for use in the WTP Pretreatment Facility (PTF).

The scope of work for the Seller includes all work specifically defined in this specification and its addenda and attachments. Work shall include, but shall not be limited to the following:

1.2.1 Provide design, materials, fabrication, testing, inspection, preparation for shipment, documentation, and submittals of a Vessel Vent Caustic Scrubber, plant item number 24590-PTF-MK-PVP-SCB-00002 in accordance with this specification, its addenda and attachments, material requisition # 24590-QL-MRA-MKAS-00002, and referenced codes, standards and Buyer documents.

1.2.2 Provide written (process, mechanical and hydraulic) guarantee that all equipment and components supplied by the Seller shall perform to the requirements of this specification, material requisition # 24590-QL-MRA-MKAS-00002, and referenced codes, standards and Buyer documents.

1.2.3 Perform the NDE for the ring beam as specified on the Mechanical Data Sheet, 24590-PTF-MKD-PVP-00002.

1.2.4 Provide design, materials, fabrication, testing, inspection, preparation for shipping, documentation, and submittals for the Vessel Vent Caustic Scrubber lateral restraint.

1.2.5 Provide Seismic Anchor Motion (SAM) for each vessel nozzle.

1.3 Work by Others

Any item not specifically listed as being supplied by the Buyer shall be provided by the Seller. The Buyer shall supply the following:

1.3.1 Shipping of the Vessel Vent Caustic Scrubber.

1.3.2 Unloading, storage and installation labor of all materials and equipment at the Buyer's job-site.

1.3.3 Supply and installation of instrumentation and controls.

1.3.4 The Buyer is responsible for the design of the ring beam for the vessel support.

1.3.5 Embeds will be provided at elevation 41'-6" for the lateral restraint.

1.3.6 Field welding of the lateral restraint to the embed plates at elevation 41'-6".

1.4 Acronyms, Abbreviations and Definitions

1.4.1 Acronyms and Abbreviations

APC	Additional Protection Class
ASME	American Society of Mechanical Engineers
DBE	Design Basis Earthquake
DF	Decontamination Factor
DOE	US Department of Energy
HEME	High Efficiency Mist Eliminator
ITS	Important to Safety
MDS	Mechanical Data Sheet
MR	Material Requisition
MSDS	Material Safety Data Sheet
NO_X	Nitrogen Oxides
ORP	Office of River Protection
PTF	Pretreatment Facility
PVP	Pretreatment Vessel Vent Process System
QA	Quality Assurance
QAP	Quality Assurance Program
QL	Quality Level
SC	Safety Class
SDC	Safety Design Class
SDS	Safety Design Significant
SS	Safety Significant
SSC	System, Structure, and Component
WG	Water Gauge
WTP	Hanford Tank Waste Treatment and Immobilization Plant

1.4.2 Quality Level (**Q**)

The quality level identifies the quality requirements to be applied to the equipment. The identified quality levels are Q, and CM (Commercial). Quality requirements are specifically defined on the associated mechanical data sheets (MDSs) and supplier quality assurance program (QAP) requirements data sheets.

1.4.3 Seismic Category (SC)

Specific requirements for each seismic category are defined in reference documents listed in section 2.3 of this specification.

1.4.4 Other Definitions

Black Cell (R5-C5): Is a sealed concrete structure containing very high radiation and contamination where human access is normally prohibited during the normal operating lifetime of the cell and maintenance is generally not performed in the cell.

C5: Contamination classification for plant areas that are considered high contamination areas. Access to C5 areas is not normally permitted.

Decontamination Factor (DF): Equals the ratio of the concentration of a component in the inlet gas versus the concentration of the same component in the outlet gas.

Design Basis Earthquake (DBE): A specification of the ground motion at the site. For the WTP site, the DBE is defined by horizontal and vertical acceleration response spectra; refer to section 2 of the MR for the attached In-Structure Acceleration Response Spectra.

Important to Safety (ITS): Systems, structures, and components (SSCs) that serve to provide reasonable assurance that the facility can be operated without undue risk to the health and safety of the workers and the public. ITS encompasses the broad class of facility features addressed (not necessarily explicitly) in the top-level radiological, nuclear, and process safety standards and principles that contribute to the safe operation and protection of workers and the public during all phases and aspects of facility operations (i.e., normal operation as well as accident mitigation). ITS includes SSCs designated as Safety Design Class (SDC) / Safety Class (SC), Safety Design Significant (SDS) / Safety Significant (SS), and Risk Reduction Class (RRC) / Additional Protection Class (APC).

MDS: Refers to the mechanical data sheet for the Vessel Vent Caustic Scrubber, Buyer document number 24590-PTF-MKD-PVP-00002.

MR: Refers to the material requisition for the Vessel Vent Caustic Scrubber, Buyer document number 24590-QL-MRA-MKAS-00002.

R5: Radiation classification for areas considered to be high or very high radiation areas.

Scrubber: Refers to the PTF Vessel Vent Caustic Scrubber, plant item number 24590-PTF-MK-PVP-SCB-00002.

1.5 Safety/Quality Classifications

Refer to the MDS for the quality level and seismic category designations of the Scrubber.

2 Applicable Documents

2.1 General

2.1.1 Work shall be done in accordance with the referenced codes, standards, and documents listed below, which are an integral part of this specification.

2.1.2 When specific chapters, sections, parts, or paragraphs are listed following a code, industry standard, or reference document, only those chapters, sections, parts, or paragraphs of the document are applicable and shall be applied. If a date or revision is not listed in section 2, the latest issue, including addenda, at the time of Request for Quote shall apply. The dates and revisions listed in section 2 shall apply to subsequent references to codes and standards within this specification. When more than one code, standard, or referenced document covers the same topic, the requirements for all must be met with the most stringent governing.

2.2 Codes and Standards

2.2.1 ASME Boiler and Pressure Vessel Code, Section VIII, Division 1, *Rules for Construction of Pressure Vessels.*

2.2.2 ASME AG-1-1997 Article AA, *Code on Nuclear Air and Gas Treatment.*

2.2.3 ASME-NQA-1-1989, *Quality Assurance Program Requirements for Nuclear Facilities.*

2.2.4 10 CFR 835, *Occupational Radiation Protection.*

2.2.5 ANSI/AISC N690-1994* *Specification for the Design, Fabrication, and Erection of Steel Safety-Related Structures for Nuclear Facilities.*
* This standard is tailored in Appendix C of the Safety Requirements Document (SRD) (2.3.22). Engineering Specification is in accordance with the tailoring in Appendix C.

2.3 Reference Documents/Drawings

2.3.1 24590-PTF-MKD-PVP-00002, *Mechanical Data Sheet for the PTF Vessel Vent Caustic Scrubber.*

2.3.2 24590-WTP-3PS-G000-T0001, *General Specification for Supplier Quality Assurance Program Requirements.*

2.3.3 24590-WTP-3PS-G000-T0002, Engineering *Specification for Positive Material Identification (PMI) for Shop Fabrication.*

2.3.4 24590-WTP-3PS-G000-T0003, *Engineering Specification for Packaging, Handling and Storage Requirements.*

2.3.5 24590-WTP-3PS-MV00-T0001, *Engineering Specification for Pressure Vessel Design and Fabrication.*

2.3.6 24590-WTP-3PS-MV00-T0002, *Engineering Specification for Seismic Qualification Criteria for Pressure Vessels.*

2.3.7 24590-WTP-3PS-MVB2-T0001, *Specification for Welding of Pressure Vessels, Heat Exchangers and Boilers.*

2.3.8 24590-WTP-3PS-SS00-T0002, *Specification for Welding of Structural Stainless Steel and Welding of Structural Carbon Steel to Structural Stainless Steel.*

2.3.9 24590-WTP-MV-M59T-00001, *Pressure Vessel Tolerances Standard Details.*

2.3.10 24590-WTP-MV-M59T-00007, *Thermowell Connection Standard Details.*

2.3.11 24590-WTP-MV-M59T-00009, *Lifting Lugs Standard Details.*

2.3.12 24590-WTP-MV-M59T-00010, *Tailing Lug Standard Details.*

2.3.13 24590-WTP-MV-M59T-00012, *Grounding Lug Standard Details.*

2.3.14 24590-WTP-MV-M59T-00016001, *Vessel Connections Standard Details Sheet 1 of 3.*

2.3.15 24590-WTP-MV-M59T-00016002, *Vessel Connections Standard Details Sheet 2 of 3.*

2.3.16 Deleted

2.3.17 24590-WTP-MV-M59T-00018, *Vessel Name Plate Standard Details.*

2.3.18 24590-WTP-PW-P30T-00001, *WTP End Prep Detail for Field Butt Welds.*

2.3.19 24590-WTP-3PS-SS90-T0001, Engineering Specification for Seismic Qualification of Seismic Category I/ II Equipment and tanks.

2.3.20 24590-WTP-DC-ST-01-001, Structural Design Criteria.

2.3.21 24590-WTP-DC-ST-04-001, Seismic Analysis and Design Criteria.

2.3.22 24590-WTP-SRD-ESH-01-001-02, Safety Requirements Document, Volume II

2.3.23 24590-WTP-3PS-MV00-T0003, ***Engineering Specification for Pressure Vessel Fatigue Analysis.***

3 Design Requirements

3.1 General

3.1.1 As Low As Reasonably Achievable (ALARA) principles shall be applied to the design of the Scrubber per 10 CFR 835, *Occupational Radiation Protection.*

3.1.2 Seller shall design the Scrubber to the requirements of

- this specification
- applicable codes, standards and documents in section 2 of this specification
- Buyer document # 24590-WTP-3PS-MV00-T0001, *Engineering Specification for Pressure Vessel Design and Fabrication*
- ASME AG-1-1997 Article AA-4000, *Code on Nuclear Air and Gas Treatment*
- the MDS (mechanical data sheet # 24590-PTF-MKD-PVP-00002)
- the MR (material requisition # 24590-QL-MRA-MKAS-00002)

3.1.3 The Scrubber, including the packed section and dry packing section, shall be designed to operate continuously for a minimum service life of 40 years without access for maintenance. Seller shall provide documentation, including but not limited to calculations and analyses, to support their design and performance of the equipment.

3.1.4 Seller shall provide a written performance guarantee for the Scrubber which shall include, but shall not be limited to, process and design calculations.

3.1.5 The main components of the Scrubber shall include, but shall not be limited to, the following:

- A ring beam for vessel support
- A vertical cylindrical scrubber sump vessel with a vessel skirt and associated nozzles
- A cylindrical column above the scrubber sump vessel. The column consists of the following:
  - A packed section (which may have one or more packed beds) filled with Raschig Rings, Intalox Saddles, or other similar packing, random or structured, for offgas scrubbing
  - A distribution system for the scrubbing solution above the packed section (irrigation and recirculation)
  - A dry packing section above the packed section for the removal of fine mists
  - Wash system for the dry packing and the packed section
  - Associated nozzles

- Lateral Restraint

3.1.6 Deleted

3.1.7 Seller shall identify all interfaces and requirements for external connections supplied by the Buyer. The type and location of interfaces shall be reviewed and approved by the Buyer prior to fabrication.

3.1.8 Seller shall design the Scrubber and its internals, particularly the packed sections, to meet the requirements of testing, packaging, shipping (in the vertical and horizontal positions), handling, storage, installation, and operation of the Scrubber.

3.1.9 Corrosion allowance is specified in the MDS and shall be applied to all surfaces exposed to process vapor or liquid.

3.1.10 Deleted.

3.1.11 Seller shall provide a report containing equipment reliability figures for all major components and sub-components of the Scrubber. The report shall be submitted to the Buyer for review per Form G-321-E of the MR. The reliability figures shall include, as a minimum, the following:

- Failure rate, or mean time between failure (whichever is available).
- Estimated modes of failure (example, vessel failure, packing failure, nozzle failure, etc.). This may be delineated in a Failure Mode and Effect Analysis (FMEA). The method used to perform the FMEA (example, MIL-STD-1629) and the year shall be specified. All assumptions used to perform the FMEA shall be clearly stated.
- Recommended maintenance and frequency, as applicable.
- Estimated time to perform the recommended maintenance, as applicable.

The data above shall be based on the physical and environmental conditions delineated in this specification. Where possible, the Seller shall compare the figures for the equipment in this specification to similar equipment sold and serviced by the Seller. The source for

all estimates and any underlying assumptions shall be stated. If software is used to perform the FMEA, the Seller shall specify the software and the version used (example software, Relex, Isogen, Reliasoft, etc.).

3.2 Basic Description

The Scrubber treats the combined vent offgas collected from process vessels located in the PTF primarily to absorb Nitrogen Oxides (NO_X) gases and other acidic gases and removes large particulates from the feed gases.

The vent offgas flows up through the packed section of the Scrubber. The packed section shall be filled with either Raschig Rings, Intalox Saddles, or other similar random or structured packing, to provide efficient contact between the vent offgas and the alkaline scrubbing solution flowing down through the packed section. Part of the NO_X gases and other acidic gases, i.e. carbon dioxide, present in the vent offgas react with the alkaline scrubbing solution to form sodium salts. The scrubbing solution is collected in the scrubber sump vessel below the packed section. The pH level of the scrubbing solution shall be monitored and maintained within the operating pH limits by intermittent addition of fresh 5 molar caustic solution to the scrubber sump vessel.

The Scrubber shall remove some radioactive aerosols and reduce the radioactive particulate loading on the vessel vent High Efficiency Mist Eliminators (HEMEs) located downstream of the Scrubber. The Scrubber must achieve a decontamination factor (DF) of at least 1.8 for the removal of NO_X gases and a DF of at least 3.5 for the removal of large particulates for particulate sizes of 2 μm and larger.

The scrubber sump vessel batch volume shall be based on the sump vessel dimensions specified in the MDS and the total addition of caustic, the maximum condensate collected from contacting with the scrubber inlet offgases, and the runback volume of scrubbing solution in the event of stoppage of the vessel vent scrubber recirculation pumps. Total number of transfers per day, corresponding volume, and operating time shall be determined by Seller.

The vessel vent scrubber recirculation pumps, PVP-PMP-00001A/B (one operating, one standby), shall supply part of the scrubbing solution to the top of the packed section. The rest of the scrubber solution is recirculated back to the scrubber sump vessel to provide adequate mixing. A heat exchanger designed and provided by the Buyer will maintain the temperature of the solution recirculated to the packed section at 70 degrees F. The Buyer will provide the pumps per the Seller's confirmation of scrubbing solution flow rates and supply pressure specified on the MDS.

Demineralized water shall be added intermittently to the Scrubber, via the wash system, either to clean and reduce the operating pressure drop across the packings, or to supply makeup requirements for maintaining liquid level in the scrubber sump vessel.

The vessel vent scrubber recirculation pumps also transfer scrubbing solution to the receipt vessel, PWD-VSL-00044. This is currently planned once a day (or upon a high level condition in the scrubber sump vessel) to maintain the liquid level of the scrubber sump vessel within the operating limits. An overflow line shall be provided to accommodate overflow of the scrubber sump vessel to the plant overflow vessel, PWD-VSL-00033.

Paragraph deleted.

Outlet offgases from the Scrubber flow to the vessel vent HEMEs. The Scrubber is located upstream of the HEMEs to saturate the offgas, thus avoiding any damage to the HEME elements

from dry operation. The Scrubber shall provide for the removal of condensate and cool the offgas stream during the upset event of loss of chilled water supply.

3.3 Performance

3.3.1 Refer to the MDS for performance requirements and amount of NO_2 (Nitrogen Dioxide), NO (Nitric Oxide) and CO_2 (Carbon Dioxide) in the offgas inlet. Seller shall update the MDS per Form G-321-E of the MR with the required information for review by the Buyer.

3.3.2 Seller shall recommend additional operating parameters that must be monitored for the Scrubber to achieve the required performance.

3.3.3 Seller shall provide the optimum operating pH range for the scrubbing solution to achieve the required performance.

3.3.4 Seller shall provide the optimum operating and maximum rates of recirculation and delivery pressures of scrubbing solution for scrubbing and mixing purposes.

3.3.5 The Scrubber shall achieve a minimum DF of 1.8 for the removal of NO_X.

3.3.6 The Scrubber shall achieve a minimum DF of 3.5 for the removal of large particulates for particulate sizes of 2 μm and larger. Seller shall provide the DF for particle sizes of 1 μm and above as well as the DF for particle sizes of 0.5 μm and above.

3.3.7 Seller shall provide detailed operating instructions, in the form of a manual or similar, describing how to operate the Scrubber for all conditions (startup, normal, abnormal, shutdown) to achieve the required performance.

3.3.8 Seller shall provide the required flow rates and supply pressures of the demineralized water for wet packing and dry packing flushing.

3.3.9 Refer to the MDS for the maximum allowable pressure drop across the Scrubber,

3.4 Scrubber Design and Standard Details

3.4.1 Refer to the MDS for the dimensional constraints and design conditions of the Scrubber. Seller shall provide the outline dimensions, dry weight, test weight, and operating weight for the Scrubber in the form of a drawing or similar per Form G-321-E of the MR.

3.4.2 Ring beam design and fabrication shall comply with the ring beam detail in the MDS.

3.4.3 Nozzle design shall be in accordance with section 3.6 of Buyer document # 24590-WTP-3PS-MV00-T0001, *Engineering Specification for Pressure Vessel Design and Fabrication*.

3.4.4 Nozzle loading and reinforcement requirements shall be in accordance with sections 3.7 and 3.8 of Buyer document # 24590-WTP-3PS-MV00-T0001, *Engineering Specification for Pressure Vessel Design and Fabrication*.

3.4.5 Lifting lug design shall be in accordance with Buyer document # 24590-WTP-MV-M59T-00009, *Lifting Lugs Standard Details*.

3.4.6 Tailing lug design shall be in accordance with Buyer document # 24590-WTP-MV-M59T-00010, *Tailing Lug Standard Details*.

3.4.7 Grounding lug design shall be in accordance with Buyer document # 24590-WTP-MV-M59T-00012, *Grounding Lug Standard Details*.

3.4.8 Deleted

3.4.9 Seller shall provide a nameplate for the Scrubber in accordance with Buyer document # 24590-WTP-MV-M59T-00018, *Vessel Name Plate Standard Details*. General note 6 of 24590-WTP-MV-M59T-00018 does not apply.

3.4.10 Match mark the ring beam and the vessel skirt, using a line of welding bead, relative to north orientation after best fit.

3.5 Environmental Conditions

3.5.1 The Scrubber shall be stored outdoors prior to installation at ambient temperature ranging from –23°F to 113°F with relative humidity ranging from 5% to 100%.

3.5.2 The Scrubber will be located in room number P-0104, a Black Cell (R5·C5), at 0'-0" elevation of the pretreatment facility. The room will be maintained between 59°F dry bulb and 113°F dry bulb with an average relative humidity of 10.7%. The pressure in the room is between -1.0"WG and -1.4 "WG. Radiation dose rate is expected to be 100,000 mRad/hr.

3.5.3 Environment Qualification is not applicable to the PTF Vessel Vent Caustic Scrubber. The scrubber and scrubber internals are constructed from metal.

3.6 Loading

3.6.1 Seller shall design the Scrubber to be capable of handling the loads and stresses imposed on the Scrubber during testing, packaging, shipping (in the vertical and horizontal positions), handling, storage, installation, operation, and a Design Basis Earthquake (DBE).

3.6.2 Seller shall perform seismic analysis per the requirements of Buyer document # 24590-WTP-3PS-MV00-T0002, Engineering Specification for Seismic Qualification Criteria for Pressure Vessels and 24590-WTP-3PS-SS90-T0001, Engineering Specification for Seismic Qualification of Seismic Category I/II Equipment and Tanks. Refer to Section 2 of the MR for the attached In-Structure Acceleration Response Spectra.

3.6.3 Seller shall provide the dead weight, operating weight, and center of gravity for the column section, sump vessel, and the entire Scrubber per Form G-321-E of the MR.

3.6.4 Seller shall provide the base reaction (with seismic load combinations) of the Scrubber per Form G-321-E of the MR.

3.7 Instrumentation and Control Requirements

3.7.1 Seller shall recommend instrumentation and controls required for the Scrubber to achieve its required performance.

3.7.2 Seller shall provide functional test set points and recommended operating set points for the Scrubber.

3.7.3 Seller shall design, fabricate and install the necessary components for Buyer supplied and installed instrumentation. The components include, but are not limited to, thermowells, dip legs, dip pipes, and nozzles.

3.7.4 Thermowell design shall be in accordance with Buyer document # 24590-WTP-MV-M59T-00007, *Thermowell Connection Standard Details*.

3.7.5 Scrubber connection design shall be in accordance with Buyer document numbers 24590-WTP-MV-M59T-00016001, *Vessel Connections Standard Details Sheet 1 of 3*, and 24590-WTP-MV-M59T-00016002, *Vessel Connections Standard Details Sheet 2 of 3*.

3.8 Accessibility and Maintenance

3.8.1 The Scrubber will not be accessible for maintenance once it is put in operational service. Seller shall consider and recommend all necessary features to ensure the Scrubber does not fail for a minimum service life of 40 years.

3.8.2 Seller shall design and install a wash system to clean the dry packing and packed section as and when required. Seller shall recommend the frequency and period of cleaning as preventive maintenance for the given duty conditions. The wash system will be supplied with demineralized water.

3.9 Lateral Restraint for scrubber at elevation 41'-6"

3.9.1 The Buyer will provide embeds at 41'-6" elevation to support the use of a lateral restraint to reduce the bending moments in the upper column, to lower vessel junction and to reduce moments at the base. The seller shall design, fabricate, and inspect the lateral restraint.

3.9.2 The lateral restraint shall be designed in accordance with 24590-WTP-DC-ST-01-001, Structural Design Criteria and 24590-WTP-DC-ST-04-001, Seismic Analysis and Design Criteria.

3.9.3 This specification section takes precedence over section 1.3, "Analysis and design of equipment/ tank supports to be furnished by the Buyer", 24590-WTP-3PS-SS90-T0001, Engineering Specification for Seismic Qualification of Seismic Category I / II Equipment and Tanks.

3.9.4 The seller shall provide a calculation for the lateral restraint including: loads on the embed plate, size of field weld at the embed plate, and sizing of the lateral restraint support members.

3.9.5 The lateral restraint design shall take in to account the Relative Displacement values specified in attachment 5 of the Material Requisition.

3.9.6 The lateral restraint design shall include field trim or adjustability to account for the vessel elevation and wall construction tolerances.

- Vessel construction elevation tolerance is; plus 0 inches, minus 1/4 inches
- Vessel location with respect to the black cell walls is; plus or minus 1 inch

Seismic Anchor Motion (SAM).

3.9.7 Provide the following information in the seismic report for the Vessel Vent Caustic Scrubber:

- For nozzles which are currently modeled in the finite element model the x, y and z displacements at the nozzle / shell / head intersection. The coordinates x, y and z are to be aligned with or referenced to the plant coordinate system identified on your fabrication drawings.
- For nozzles not currently modeled in the finite element model the same information is required as above.
- Stiffness coefficients for each nozzle currently modeled in the finite element model. Stiffness coefficients shall be reported as follows:
  - Cylindrical shell mounted nozzles
    - In plane shall be presented as longitudinal plane
    - Out plane shall be represented as circumferential plane
    - Torsional
  - Spherical shell (head) mounted nozzles
    - In plane shall be presented as meridional plane
    - Out plane shall be presented as latitudinal plane
    - Torsional

4 Materials

4.1 General

4.1.1 All materials of construction for the Scrubber shall conform to the requirements of:

- this specification
- Buyer document # 24590-WTP-3PS-MV00-T0001, *Engineering Specification for Pressure Vessel Design and Fabrication*
- Buyer document # 24590-WTP-3PS-G000-T0002, *Specification for Positive Material Identification*
- the MDS
- the MR
- ASME AG-1-1997 Article AA-3000, *Code on Nuclear Air and Gas Treatment*

4.1.2 Seller shall provide Material Safety Data Sheets (MSDSs) for all applicable materials used in the construction of the Scrubber.

4.1.3 All materials used in the construction of the Scrubber shall be resistant to the radiation dose rate indicated in section 3.5 of this specification.

4.1.4 The lateral restraint shall be stainless steel in accordance with section 7.1.2, 24590-WTP-DC-ST-01-001, Structural Design Criteria.

4.2 Prohibited Materials

4.2.1 Mercury and other low melting point metals, their alloys, or materials containing such metals as their basic constituents shall not be used in the construction of the Scrubber.

4.2.2 Sulfides and halides shall not be used in direct contact with stainless steel.

4.2.3 Asbestos shall not be included in any component of the Scrubber.

4.2.4 Carbon steel shall not be included in any component in contact with fluid and the vessel.

4.2.5 Halide containing materials shall not be used in any component of the Scrubber.

5 Fabrication

5.1 General

5.1.1 Fabrication of the Scrubber shall conform to the requirements of:

- this specification
- Buyer document # 24590-WTP-3PS-MV00-T0001, *Engineering Specification for Pressure Vessel Design and Fabrication*
- the MR
- ASME AG-1-1997 Article AA-6000, *Code on Nuclear Air and Gas Treatment*

5.1.2 Fabrication tolerances shall conform to the requirements of ASME Boiler and Pressure Vessel Code, Section VIII, Division 1, *Rules for Construction of Pressure Vessels*, and Buyer document # 24590-WTP-MV-M59T-00001, *Pressure Vessel Tolerances Standard Details*.

5.1.3 End preparations of field butt welds shall be in accordance with Buyer document # 24590-WTP-PW-P30T-00001, *WTP End Prep Detail for Field Butt Welds*.

5.2 Welding

5.2.1 Welding of the Scrubber shall conform to the requirements of the documents listed in section 5.1.1 of this specification and Buyer document # 24590-WTP-3PS-MVB2-T0001, *Specification for Welding of Pressure Vessels, Heat Exchangers and Boilers*.

5.2.2 Welding of structural steel shall conform to the requirements of Buyer document # 24590-WTP-3PS-SS00-T0002, *Specification for Welding of Structural Stainless Steel and Welding of Structural Carbon Steel to Structural Stainless Steel*.

6 Tests and Inspections

6.1 General

6.1.1 Seller shall conduct and be responsible for all testing and inspections of the Scrubber per the requirements of:

- this specification
- ASME Boiler and Pressure Vessel Code, Section VIII, Division 1, *Rules for Construction of Pressure Vessels*
- Buyer document # 24590-WTP-3PS-MV00-T0001, *Engineering Specification for Pressure Vessel Design and Fabrication*
- the MR
- ASME AG-1-1997 Article AA-5000, *Code on Nuclear Air and Gas Treatment*

6.1.2 Nondestructive Examination requirements shall be in accordance with sections 6.1, 6.2, and 7.2 of Buyer document # 24590-WTP-3PS-MV00-T0001, *Engineering Specification for Pressure Vessel Design and Fabrication.*

6.1.3 Seller shall develop and submit detailed test and inspection procedures for conducting all testing and inspections required per this specification, applicable codes, standards, and reference documents for review by the Buyer prior to fabrication of the Scrubber.

6.1.4 Seller shall complete and submit reports of all testing and inspections. Reports shall identify the component tested or inspected, date performed, applicable procedures, acceptance criteria, person performing the test or inspection, results, and conclusions. Drawings of test setups shall be included. All testing and inspection results shall be certified.

6.1.5 Control and calibration of measuring and test equipment shall be in accordance with ASME AG-1-1997 Article AA-5130, *Code on Nuclear Air and Gas Treatment.*

6.1.6 Nondestructive Examination for the ring beam shall meet the additional requirements of ANSI/AISC N690, section 11, 24590-WTP-3PS-SS00-T0002, Welding of Structural Stainless Steel and Welding of Structural Carbon Steel to Structural Stainless Steel. All ring beam welds are considered critical welds. Section 11 is mandatory even if the web to flange weld NDE is not indicated on a drawing.

6.1.7 Nondestructive Examination for the lateral restraint shall meet the additional requirements of ANSI/AISC N690, section 11, 24590-WTP-3PS-SS00-T0002, Welding of Structural Stainless Steel and Welding of Structural Carbon Steel to Structural Stainless Steel.

7 Preparation for Shipment

7.1 General

7.1.1 The Scrubber shall be prepared for shipment in accordance with:

- Buyer document # 24590-WTP-3PS-MV00-T0001, *Engineering Specification for Pressure Vessel Design and Fabrication*

- Buyer document # 24590-WTP-3PS-G000-T0003, *General Specification for Packaging, Shipping, Handling and Storage Requirements*
- ASME AG-1-1997 Article AA-7000, *Code on Nuclear Air and Gas Treatment*

7.1.2 All results of shop tests and inspections for the Scrubber shall be reviewed by the Buyer prior to preparing and packaging it for shipment.

7.1.3 Seller shall verify, by calculation, that the Scrubber and its internals will withstand loads occurring during shipping, handling and installation.

7.2 Tagging

7.2.1 All packages shall be clearly and suitably tagged to at least show the Seller's name, Buyer's name, plant item number, purchase order number, package contents, parts list (for each package), and handling instructions.

7.2.2 The Scrubber shall be identified using a nameplate as specified in section 3.4.9 of this specification.

7.3 Shipping, Handling and Storage Instructions

Seller shall submit shipping weights as well as detailed shipping, handling, and storage instructions for the Scrubber prior to its shipment per Form G-321-E of the MR.

8 Quality Assurance

8.1 General Requirements

8.1.1 Seller's Quality Assurance Program (QAP) requirements are specified in Buyer document # 24590-WTP-3PS-G000-T0001, *General Specification for Supplier Quality Assurance Program Requirements*.

8.1.2 Seller's QAP manual shall be submitted to the Buyer for review in accordance with Buyer document # 24590-WTP-3PS-G000-T0001, *General Specification for Supplier Quality Assurance Program Requirements*.

8.1.3 Seller's QAP, as a minimum, shall contain the requirements detailed in the Supplier Quality Assurance Program Requirements data sheet listed in section 2 of the MR.

8.2 Quality Related Components

8.2.1 Seller shall have in place a QAP meeting the requirements of ASME-NQA-1-1989, marked as applicable in Supplier Quality Assurance Program Requirements Data Sheet attached to the MR, and Buyer document # 24590-WTP-3PS-G000-T0001, *General Specification for Supplier Quality Assurance Program Requirements*.

8.2.2 The successful bidder must pass a pre-award survey by the Buyer. Seller shall demonstrate that its quality program is in compliance with the procurement quality

requirements listed in the Supplier Quality Assurance Program Requirements Data Sheet. Seller shall allow the Buyer, its agents, and DOE access to their facility and records pertaining to this purchase order for the purpose of QA audits and surveillance at mutually agreed times.

8.2.3 All items shall be manufactured in accordance with Seller's QAP that meets the requirements of ASME NQA-1-1989, and has been previously evaluated and accepted by the WTP Quality Assurance Organization.

8.2.4 Seller shall submit their QAP and work plan to the Buyer for review prior to commencement of work. The plan shall include documents and procedures to implement the work and include a matrix of essential QA elements cross referenced with the documents or procedures.

9 Configuration Management

9.1 The equipment covered by this specification is identified with the plant item number shown in the MDS. The equipment shall be identified in accordance with section 7.2, Tagging, of this specification.

9.2 Substitutions and deviations shall be in accordance with section 2.6 of the MR.

10 Documentation and Submittals

10.1 General

10.1.1 Seller shall submit to Buyer all detailed designs, documentation, procedures, instructions, calculations, analyses, manufacturer data, inspection reports, test reports, certifications, certificates, manuals, MSDSs, and drawings required per this specification, its addenda and attachments, the MR, and referenced codes, standards and Buyer documents.

10.1.2 Seller shall submit to Buyer the Engineering and Quality Verification documents in the forms, quantities, and timing shown in Form G-321-E, *Engineering Document Requirements*, and Form G-321-V, *Quality Verification Document Requirements*, in section 3 of the MR.

10.1.3 Section 2.6 of the MR applies for substitutions and deviations.

10.1.4 Each documentation transmittal package shall have a documentation inventory sheet attached listing all documents and the number of pages in each.

10.1.5 The seller shall submit to the buyer all detail designs, documentation, calculations, analysis, inspection reports, test reports, certifications, certificates, and shop detail drawings for the lateral restraint.

10.2 Calculations

All calculations to be provided to the Buyer shall be orderly, complete, and sufficiently clear to permit verification. The body of the calculations shall include:

- a concise statement of the purpose of the calculation
- input data, applicable criteria, and stated assumptions
- a list of references used, including drawings, codes, standards, and computer programs (indicate the version or issue date)
- a discussion of rationale used for design assumption basis
- equations used for all computations
- numerical calculations including identification of units used
- a concise statement addressing the calculation results and/or recommendations
- a table of contents for complex calculations

10.3 Schedules

10.3.1 A detailed schedule of engineering, document submittals, material purchases, fabrication, shop tests, and shipment shall be submitted using Form 15EX in section 3 of the MR.

10.3.2 Deleted

Quarter Ending June 30, 2011 24590-PTF-PCN-ENV-08-008

Hanford Facility RCRA Permit Modification Notification Form
Part III, Operating Unit 10
Waste Treatment and Immobilization Plant

Index

Page 2 of 3: Hanford Facility RCRA Permit, Part III, Operating Unit 10, Waste Treatment and Immobilization Plant
Replace Mechanical Data Sheet (MDS) and Mechanical Drawings for the PTF Plant Wash Vessel (PWD-VSL-00044) in Appendix 8.6 of the Dangerous Waste Permit (DWP).

Submitted by Co-Operator:

Donna M Busche 4/27/11
D. M. Busche Date

Reviewed by ORP Program Office:

D L Noyes 5/27/11
D. L. Noyes Date

Quarter Ending June 30, 2011 24590-PTF-PCN-ENV-08-008

Hanford Facility RCRA Permit Modification Notification Form	
Unit: **Waste Treatment and Immobilization Plant**	Permit Part: **Part III, Operating Unit 10**

Description of Modification:

The purpose of this Class 1 prime modification is to update the MDS and Equipment Assembly mechanical drawings for the PTF Plant Wash Vessel (PWD-VSL-00044) in Appendix 8.6 of the DWP.

The following MDS and drawings are being submitted to replace the MDS and drawings currently in Appendix 8.6. The increase in the number of drawings submitted results from converting the source drawing into three to provide a clearer representation of the system, including additional details for internal assemblies.

Appendix 8.6			
Replace:	24590-PTF-MV-PWD-P0010, Rev. 1	With:	24590-PTF-MV-PWD-00010001, Rev. 0 24590-PTF-MV-PWD-00010002, Rev. 0 24590-PTF-MV-PWD-00010003, Rev. 0
Replace:	24590-PTF-MVD-PWD-P0002, Rev. 3	With:	24590-PTF-MVD-PWD-00002, Rev. 8

This modification requests Ecology approval and incorporation into the permit the specific changes to the above DWP documents. Changes to earlier revisions of source documents not captured by change bars are identified in the revision history summary. Revisions are the result of ongoing design (changes from vendor preliminary data to vendor detailed design), seismic and mixing analyses, and general criteria from design verification review. The following identifies the significant changes that have been incorporated:

Mechanical Drawings (24590-PTF-MV-PWD-00010001, 24590-PTF-MV-PWD-00010002, and 24590-PTF-MV-PWD-00010003)

- Modified, deleted, and added notes, holds, and references
- Added sheets (2 of 3 and 3 of 3) with sections and details
- Provided detail on number and sizes of nozzles
- Added/revised ITS details

Mechanical Data Sheet (24590-PTF-MVD-PWD-00002)

- Modified, deleted, and added notes; added references (Attachment 1)
- Updated quality level and operating conditions; increased erosion allowance and revised specific gravity; and updated Equipment Cyclic Data Sheet
- Added Functional/Safety Requirements section and Seismic section
- Added/updated sections describing Loads Induced by Pulse Jet Mixers (PJMs), Hydrodynamic Loads Due to Normal PJM Operations, and PJM Overblow Loads
- Added diagram and information for External Pipe Support Loads
- Added table for Nozzle Loads
- Added Equipment Qualification Datasheet (EQD), which includes E-Notes 1 through 7 (originally numbered as Notes 15 through 21 in Revision 7)

This modification requests Ecology approval and incorporation of the following outstanding change document(s) into the permit. Although not yet incorporated into the revised documents included in this PCN, the listed change document(s) are intended to be incorporated into the permit.

24590-PTF-MV-PWD-00010001

- 24590-WTP-SDDR-MS-10-00083

24590-PTF-MVD-PWD-00002

- 24590-QL-MRE-MVA0-00001-T0004

Quarter Ending June 30, 2011

24590-PTF-PCN-ENV-08-008

WAC 173-303-830 Modification Class:	Class 1	Class [1]1	Class 2	Class 3
Please mark the Modification Class:		X		

Enter relevant WAC 173-303-830, Appendix I Modification citation number: NA

Enter wording of WAC 173-303-830, Appendix I Modification citation:

In accordance with WAC 173-303-830(4)(d)(i), this modification notification is requested to be reviewed and approved as a Class [1]1 modification. WAC 173-303-830(4)(d)(ii)(A) states, "Class 1 modifications apply to minor changes that keep the permit current with routine changes to the facility or its operation. These changes do not substantially alter the permit conditions or reduce the capacity of the facility to protect human health or the environment. In the case of Class 1 modifications, the director may require prior approval."

Modification Approved/Concur: [X] Yes [ ] Denied (state reason below)

Reason for denial:

Reviewed by Ecology:

J. J. Wallace for

J. J. Wallace

7-28-11

Date

Doc: 11-ESQ-117

Drawing(s):

24590-PTF-MV-PWD-00010001 Rev 0 [SHEET 1 OF 3]
24590-PTF-MV-PWD-00010002 Rev 0 [SHEET 2 OF 3]
24590-PTF-MV-PWD-00010003 Rev 0 [SHEET 3 OF 3]

have been scanned as separate attachment(s) due to size and printing capabilities.

R11222237

MECHANICAL DATA SHEET: VESSEL

PLANT ITEM No. 24590-PTF-MV-PWD-VSL-00044

Project	RPP-WTP	P&ID	24590-PTF-M6-PWD-00002001, and 00046 24590-PTF-M6-UFP-00007007, 00008007, 00009006, and 00011005. 8
Project No	24590	Calculations:	Attachment 1 8
Project Site	Hanford	Vessel Drawing	24590-PTF-MV-PWD-00010001, 10002, and 10003
Description:	Plant Wash Vessel	Reports	Attachment 1 8

Reference Data

Charge Vessels (Tag Numbers)	PWD-VSL-00121, PWD-VSL-00122, PWD-VSL-00123, PWD-VSL-00124, PWD-VSL-00125
Pulsejet Mixers / Agitators (Tag Numbers)	PWD-PJM-00021, PWD-PJM-00022, PWD-PJM-00023, PWD-PJM-00024, PWD-PJM-00025, PWD-PJM-00026, PWD-PJM-00027, PWD-PJM-00028
RFDs/Pumps (Tag Numbers)	PWD-RFD-00121, PWD-RFD-00122, PWD-RFD-00123, PWD-RFD-00124, PWD-RFD-00125

Design Data

Quality Level		Q (Note 13)	Fabrication Specs	24590-WTP-3PS-MV00-T0001		
Seismic Category		SC-1	Design Code	ASME VIII Div 1		
Service/Contents		Radioactive Liquid	Code Stamp	Yes		
Design Specific Gravity		1.30	NB Registration	Yes		
Maximum Operating Volume	gal	88,636 8	Weights (lbs)	Empty	Operating	Test
Total Volume	gal	103,029 8	Estimated	227,000	1,178,000	1,088,000
Environmental Qualification		See EQD Section				

Inside Diameter	inch	276			Wind Design	Not Required	
Length/Height (TL-TL)	inch	306			Snow Design	Not Required	
		Vessel Operating	Vessel Design	Coil/Jacket Design	Seismic Design	24590-WTP-3PS-MV00-T0002	
Internal Pressure	psig	0.00	15	N/A			
External Pressure	psig	1.5	8 8	N/A	Postweld Heat Treat	Not Required	
Temperature	°F	163	230 8	N/A	Corrosion Allowance	Inch	0.04 (Notes 9 & 10)
Min. Design Metal Temp.	°F	40					

Materials of Construction

Component	Material	Minimum Thickness / Size	Containment
Top Head	SA 240 316 (Note 1)	See Drawing	Auxiliary (Note 6)
Shell	SA 240 316 (Note 1)	See Drawing	Primary (Note 6)
Bottom Head	SA 240 316 (Note 1)	See Drawing	Primary (Note 6)
Support	SA 240 304 (Note 1)	See Drawing	N/A
Jacket/Coils/Half-Pipe Jacket	N/A	N/A	N/A
Internals	SA 240 316 (Note 1)	See Drawing	Thermowells Primary
Pipe	SA 312 TP316 Seamless (Note 1)	See Drawing	Primary (Note 6)
Forgings/ Bar stock	SA 182 F316 (Note 1)	See Drawing	N/A
Gaskets	N/A	N/A	N/A
Bolting	N/A	N/A	N/A

Miscellaneous Data

Orientation	Vertical	Support Type	Skirt
Insulation Function	Not Applicable	Insulation Material	Not Applicable
Insulation Thickness (inch)	Not Applicable	Internal Finish	Note 3
		External Finish	Note 3

Remarks

Note 1: ***Max. carbon of 0.030 %***

Note 2: ***Deleted***

Note 3: ***Welds descaled as laid.***

Note 4: ***Vessel volumes are approximate and do not account for the manufacturing tolerances, nozzles, and displacement of internals.***

Note 5: ***This vessel is in a Black cell.***

Note 6: ***All welds forming part of the primary and auxiliary containment including nozzle attachment welds shall be subjected to 100% volumetric examination.***

Note 7: ***Contents of this document are Dangerous Waste Permit affecting.***

Note 8: ***Deleted***

Note 9: ***Ensure that an additional 0.116" is available for erosion in the bottom head and shall report the minimum thickness required for all specified loading conditions, exclusive of erosion and corrosion allowances.***

Note 10: ***Ensure that an additional 0.064" is available for erosion in the lower 4" of the interior conical surface of the pulse jet mixers.***

Note 11: ***Deleted*** 8

Note 12: ***Deleted*** 8

Note 13: ***Vessel to be designed, fabricated, and tested to Q, L-1 requirements defined in 24590-WTP-3PS-MV00-T0001.***

Note 14: ***Change to quality level, operating external pressure, revised specific gravity, revised operating temperature, revised external pressure, revised corrosion allowance, revised Notes 9 & 10, added Notes 13, 14, 15, 16, 17, 18, 19, 20, and 21, added functional/safety requirements, added seismic section, change to parent vessel cyclic data, change to hydrodynamic loads for normal operations, revised single overblow loads, added MOB loads, change to PJM cyclic data, added HPAV load conditions and loads, added E&NS table and signature, added Equipment Qualification Data Sheet, added DOE Radioactive Material Disclaimer. If any Sections contain a revision triangle next to the Section heading means the entire section has been revised or is new - the entire section must be reviewed for changes/additions.***

Note 15: ***Renumbered Equipment Qualification Notes for clarity. Revised Hydrodynamic Loading, PJM Overblow Loads, and Nozzle Loads Sections. Added External Pipe Support Loads.*** 8

Functional/Safety Requirements 8

PWD-VSL-00044 (parent vessel) is considered a high active process vessel credited to prevent spills of large quantities of high activity process liquid and provide primary confinement for radioactive releases. Pulse Jet Mixers (PJMs) provide a mixing function in the vessel. Vessel level instrumentation, which includes the bubbler tubes, provides level monitoring to prevent overflows and ensure proper headspace volumes are maintained. In order to meet the above functions, the vessel and internals shall be designed and fabricated in accordance with ASME Section VIII and must meet all Division 1 code allowables for all defined load conditions/combinations.

Seismic 8

- ***Seismic Response Spectra curves: Figures 67, 68, and 69 from calculation 24590-PTF-S0C-S15T-00057 (CCN 188859).***
- ***Seismic analysis to be combined with operating conditions, overblow, and any sloshing loads imposed.***
- ***Sloshing loads on vessel internals are per ASCE 4-98.***
- ***Analysis to consider worst case seismic loads on the vessel proper and on the vessel internals.***

Design Considerations for Loads Induced by Pulse Jet Mixers (PJMs) 8

Pulse Jet Mixers (PJMs) are designed to mix the vessel contents using a liquid jet discharge. PJMs are driven by compressed air. The mixing is required to enhance heat transfer, to break up hydrogen-containing particles, and to homogenize the solution. Normally, the PJMs are operated simultaneously within the parent vessel.

The PJMs operate in the following three cycles: Suction, Drive and Vent. During the suction cycle a vacuum is created in the PJM headspace and the level within the PJM rises to fill the PJM. During the drive cycle the PJM is pressurized and liquid is discharged. During the vent cycle, the pressure in the headspace approaches atmospheric and the level within the PJM is allowed to reach equilibrium.

Vessel components shall be designed to withstand loading induced by PJM operations as described herein.

Normal Operations: Liquid flows around internal structures within the parent vessel producing hydrodynamic loads such as drag and vortex shedding.

To mitigate the dynamic effects, the following pipe sizes dipped internal to the vessel are required to have a minimum first natural frequency that is double the vortex shedding frequency:

Nominal Pipe Size	Minimum First Natural Frequency
1 inch (<12" from bottom head)	14 Hz*
1 inch (>12" from bottom head)	12 Hz*
2 inch	8.0 Hz*
3 inch	5.0 Hz**

* See 24590-WTP-MVC-50-00001
** By extrapolation from 1 inch and 2 inch

Overblow Condition: Occasionally the drive cycle lasts too long and compressed air is discharged from the PJM. Overblows can also occur during system calibration. One or multiple PJMs may overblow at any time. These conditions induce acoustic and bubble rise loads on structures.

All internal components shall be designed for the combination of normal operational hydrodynamic loads and overblow loads. Single overblows (SOB) are assumed to act concurrently with the seismic event, however multiple overblows (MOB) are not assumed to act concurrently with the seismic event. Figure 1 (below) provides the acoustic load intensity that encompasses both SOB and MOB.

8

Hydrodynamic Loads Due to Normal PJM Operations

Normal operation imposes a cyclical load ranging between -0.15 and 0.25 psi in the radial direction and -0.15 to 0.15 psi in the vertical direction. The hydrodynamic pressure applies across the projected area of the component. Positive hydrodynamic forces act in the radial, outward direction and the vertical, upward direction. Seller shall apply the radial load simultaneously in the radial direction and normal to the radial direction in the horizontal plane.

PJM Overblow Loads 8

Discussion: During normal operation, pulse jet mixers (PJMs) mix the fluid by pulling in (suction) and pushing out (drive) fluid. During an upset condition, designated as an 'overblow', air is discharged following the drive cycle of one or more PJMs. The load consists of acoustic pressure (2Hz to 200Hz) developed in the first 200ms of the event and a load due to the bubble rising through the fluid.

The acoustic load and the bubble load are design loads as defined by ASME B&PVC, Section 8, Division 1, UG-22, applied statically. The acoustic load is not added to the bubble rise load because they occur at different times during the overblow event.

Acoustic Load

- ***The acoustic design load in Figure 1 is applied to the visible (as viewed from the overblow origin) surface of cylindrical targets such as pipes, charge vessels, and PJMs. The load is applied in the direction normal to the principal axis of the target as illustrated in Figure 2. Note: The intended net effective load on the target is equal to the projected (i.e. cross-sectional) area of the object times the acoustic design load (psi) indicated in Figure 1.***
- ***Each target is considered independent of the surrounding targets: e.g. the surrounding targets do not impede the acoustic wave by casting a shadow, as illustrated in Figure 2.***
- ***The load is not applied to small supports such as gussets, brackets, tabs, clamps, and bolts because they are rigid and the pressure drop across the target is negligible.***
- ***When the vessel contains multiple PJMs, the load from one PJM is independent of the load from other PJMs. The loads are not additive for multiple overblows.***
- ***No internal components shall be placed within 5 PJM nozzle diameters (5 * 4 in = 20 in) of a spherical zone centered at any overblowing PJM nozzle.***

Figure 1: Acoustic Design Load

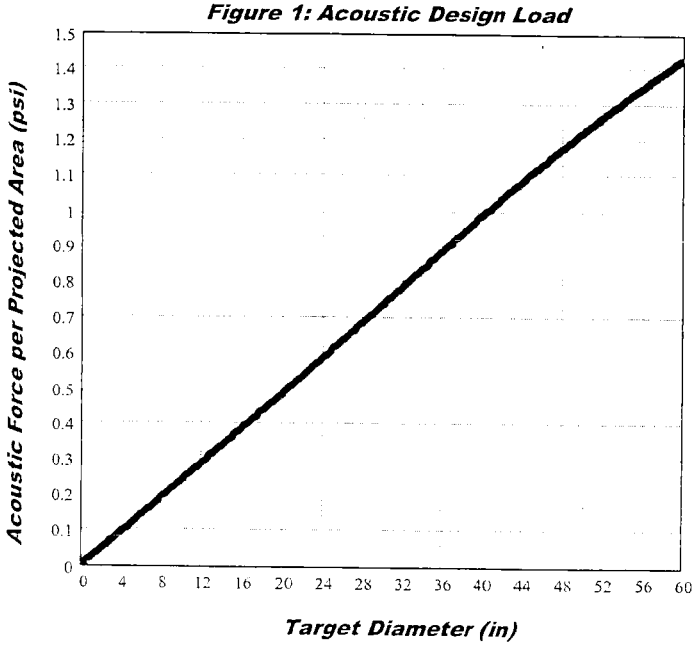

Figure 2: Load Application

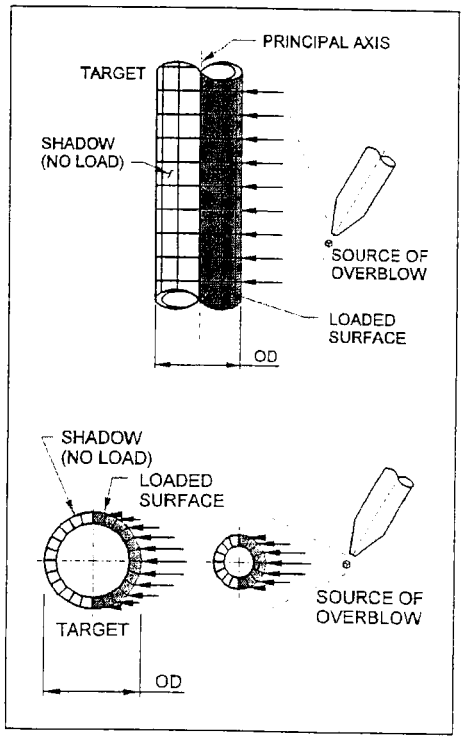

The following data is required to determine the load:

- ***Target Diameter***
- ***Target Principal Axis***

Overblow Source Coordinates

Number of Acoustic Cycles

1000 events X 40 cycles/event for a total of 40,000 acoustic cycles.

Bubble Rise Load

A vertical force per projected area of 1.7 psi is applied to the surfaces in the 36-inch diameter cylindrical zone centered at the overblowing PJM(s). The bubble can be at any elevation above the overblowing PJM and only affects one zone (36-inch diameter region) at a time. When there are multiple PJMs in a vessel (MOB), each PJM has it's own bubble. To simplify analysis the bubble can be applied in a continuous cylindrical zone above each PJM top head.

Number Bubble Rise Cycles

1000 events X 1 cycle/event

Equipment Cyclic Data Sheet

Component	*24590-PTF-MV-PWD-VSL-00044*
Component Description	*Parent Vessel*

The information below is provisional and envelopes operational duty for fatigue assessment. It is not to be used as operational data.

Materials of Construction	*SA 240 316 with max. Carbon of 0.030 %*
Design Life	*40 years*
Component Function and Life Cycle Description	*This is a "batch" vessel and cycle from nearly empty to nearly full. This vessel will be in the fill mode for one day, then in the discharge mode over the next day.*

Load Type		Min	Max	Number of Cycles	Comment
Design Pressure	psig	-8 △8	15	10	Nominal assumption
Operating Pressure	psig	-1.5 0 △8	0 2.8	7.0E6 40	Normal Operations Loss of Power
Operating Temperature	°F	59	163 △8	2920	Uniform material temperature range, not between two points
Contents Specific Gravity		1.00	1.30	2920	
Contents Level	inch	53	371	2920	
Localized Features					
Nozzles **N55, N56**	°F	59	212	2880	

Notes

Cycle increase: The Seller must increase the numbers of operational cycles given above by 10% to account for commissioning duty unless otherwise noted.

Equipment Cyclic Data Sheet

Component	*PWD-VSL-00121, PWD-VSL-00122, PWD-VSL-00123, PWD-VSL-00124, PWD-VSL-00125*
Component Description	*Charge Vessels*

The information below is provisional and envelopes operational duty for fatigue assessment. It is not to be used as operational data.

Materials of Construction	*SA 240 316 with max. Carbon of 0.030 %*
Design Life	*40 years*
Component Function and Life Cycle Description	*These charge vessels are cyclically loaded using vacuum to fully fill the charge vessel with process liquid and compressed air to fully empty the charge vessel. The charge vessels are contained within a parent vessel with varying liquid level. They shall be designed to cycle between the maximum design pressure and the minimum design pressure plus the external static head imposed by the parent vessel. The charge vessel supports shall be designed to cycle between fully buoyant (charge vessel empty and parent vessel full) and fully loaded (charge vessel full and parent vessel empty).*

Load Type		Min	Max	Number of Cycles	Comment
Design Pressure	psig	FV	135	100	Nominal assumption
Operating Pressure	psig	FV	75	2.1E5	Number of cycles varies per charge vessel 2.1E5 is the maximum. 75 psig is max of any charge vessel
Operating Temperature	°F	59	163 △8	2920	Same as Parent Vessel
Contents Specific Gravity		1.00	1.30	2920	Same as Parent Vessel
Contents Level	inch	Empty	Flooded	2.1E5	Coincident with pressure cycles
Localized Features					
Supports		buoyant to loaded		2.1E5	

Notes

Cycle increase: The Seller must increase the numbers of operational cycles given above by 10% to account for commissioning duty unless otherwise noted.

Equipment Cyclic Data Sheet

Plant Item Number	*PWD-PJM-00021, PWD-PJM-00022, PWD-PJM-00023, PWD-PJM-00024, PWD-PJM-00025, PWD-PJM-00026, PWD-PJM-00027, PWD-PJM-00028*
Component Description	*Pulse Jet Mixers*

The information below is provisional and envelopes operational duty for fatigue assessment. It is not to be used as operational data.

Materials of Construction	*SA 240 316 with max. Carbon of 0.030 %*
Design Life	*40 years*
Component Function and Life Cycle Description	*These pulse jet mixers (PJMs) are cyclically loaded using vacuum to fully fill the PJM with process liquid and compressed air to fully empty the PJM. The PJMs are contained within a parent vessel with varying liquid level. They shall be designed to cycle between the maximum design pressure and the minimum design pressure plus the external static head imposed by the parent vessel. The PJM supports shall be designed to cycle between fully buoyant (PJM empty and parent vessel full) and fully loaded (PJM full and parent vessel empty) states. Thrust load shall be applied only to the fully buoyant state. Assume the parent vessel is full for 50% of the number of PJM cycles.*

Load Type		Min	Max	Number of Cycles	Comment
Design Pressure	psig	*FV*	*135*	*100*	*Nominal assumption*
Operating Pressure	psig	*FV*	*16*	*8.0E6*	
Operating Temperature	°F	*59*	*163* 8	*2920*	*Same as Parent Vessel*
Contents Specific Gravity		*1.00*	*1.30*	*2920*	*Same as Parent Vessel*
Contents Level	inch	*Empty*	*Flooded*	*8.0E6*	*Coincident with pressure cycles*
Thrust	lbf	*-400*	*400*	*8.0E6*	*Conservative value*
Localized Features					
Supports		*buoyant to loaded*		*8.0E6*	

Notes

- *Cycle increase: The Seller must increase the numbers of operational cycles given above by 10% to account for commissioning duty unless otherwise noted.*

External Pipe Support Loads 8

The PWD-VSL-00044 has six standoffs on its Northern face which will be used to support four vertical pipe runs. Brackets attached to the outer face of these six stand-offs will produce transverse and moment loading on the standoffs as described in the table below:

Pipe Supports Diagram: The loads listed below have been sourced from submittal 24590-QL-POD-MVA0-00001-04-03, Rev 00B, and are considered maximum allowable attachment loads.

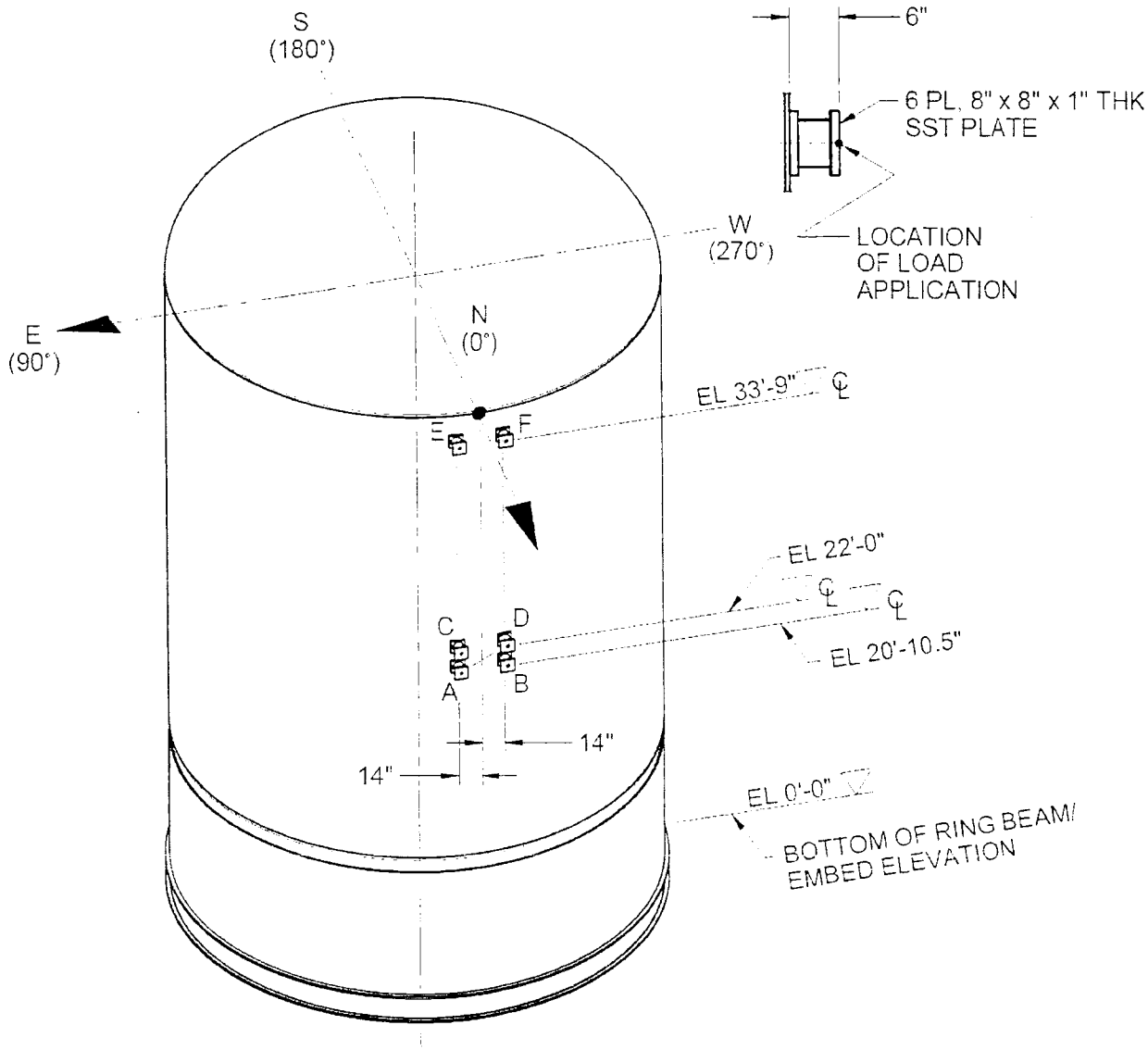

Pipe Supports Loads Table:

Location (standoff)	Fx (lbf) (North)	Fy (lbf) (vertical)	Fz (lbf) (East)	Mx (in-lbf)	My (in-lbf)	Mz (in-lbf)
A	3600	3600	150	1500	2000	300
B	3600	3600	150	1500	2000	300
C	8800	400	3100	2700	38000	4400
D	8800	400	3100	2700	38000	4400
E	5200	640	3300	20	43000	16000
F	5200	640	3300	20	43000	16000

Nozzle Loads (8)

Nozzle	Design Pressure (psig) (Note E)	Design Temp (°F) (Note E)	Size	Load Type	Loads - lbs			Moments - ft-lbs		
					Fx	Fy	Fz	Mx	My	Mz
N01	15	237	8"	Weight	234	830	234	1721	464	2248
				Seismic	734	1156	734	3503	4418	4418
				Thermal	710	640	950	2870	5720	5720
N03 (Spare)	N/A	N/A	3"	Weight	52	84	52	119	75	75
				Seismic	162	108	162	468	701	701
				Thermal	140	130	190	400	800	800
N05 (Spare)	N/A	N/A	3"	Weight	52	84	52	119	75	75
				Seismic	162	108	162	468	701	701
				Thermal	140	130	190	400	800	800
N06	75	128	4"	Weight	87	140	87	216	135	135
				Seismic	274	183	274	878	1320	1320
				Thermal	240	378	320	760	1510	1605
N07	75	128	4"	Weight	87	140	87	216	135	135
				Seismic	274	183	274	878	1320	1320
				Thermal	240	378	320	760	1510	1605
N08	150	120	3"	Weight	52	107	52	119	75	75
				Seismic	162	108	162	468	701	701
				Thermal	140	130	190	400	800	800
N10	75	192	4"	Weight	87	140	87	216	135	135
				Seismic	274	183	274	878	1320	1320
				Thermal	240	378	320	760	1510	1605
N11	80	372	2"	Weight	50	60	50	75	75	88
				Seismic	106	70	106	158	237	237
				Thermal	120	60	100	110	210	210
N12	15	188	2"	Weight	50	60	50	75	75	75
				Seismic	106	70	106	158	244	262
				Thermal	70	149	100	400	210	210
N13	150	120	3"	Weight	52	264	52	119	75	75
				Seismic	162	144	162	468	701	701
				Thermal	140	130	190	400	800	800
N14	124	140	2"	Weight	50	60	50	75	75	75
				Seismic	106	70	106	214	237	237
				Thermal	70	60	100	110	210	210
N15	124	140	2"	Weight	50	60	50	75	75	75
				Seismic	106	70	112	346	237	237
				Thermal	70	60	100	110	210	210
N16	124	140	2"	Weight	50	60	50	75	75	75
				Seismic	106	70	106	158	237	237
				Thermal	70	60	100	110	210	210
N17	124	140	2"	Weight	50	60	50	75	75	75
				Seismic	106	70	116	414	237	237
				Thermal	70	60	100	110	210	210
N18	124	140	2"	Weight	50	60	50	75	75	75
				Seismic	106	70	106	158	237	340
				Thermal	70	60	100	110	210	210

Nozzle	Design Pressure (psig) (Note E)	Design Temp (°F) (Note E)	Size	Load Type	Loads - lbs			Moments - ft-lbs		
					Fx	Fy	Fz	Mx	My	Mz
N19	124	140	2"	Weight	50	60	50	75	75	75
				Seismic	106	70	106	221	237	237
				Thermal	70	80	100	148	210	210
N20	124	140	2"	Weight	50	60	50	75	75	75
				Seismic	106	70	106	264	237	237
				Thermal	70	99	100	110	210	210
N21	124	140	2"	Weight	50	60	50	75	75	75
				Seismic	106	70	106	190	237	237
				Thermal	70	60	100	110	210	210
N22 (Spare)	N/A	N/A	2" OD	Weight	50	60	50	75	75	75
				Seismic	106	70	106	158	237	237
				Thermal	70	60	100	110	210	210
N23	124	140	3"	Weight	52	177	52	119	75	75
				Seismic	162	210	185	468	701	701
				Thermal	140	147	190	400	800	800
N24	124	140	3"	Weight	52	209	52	188	75	75
				Seismic	162	395	182	1074	701	701
				Thermal	140	130	190	400	800	800
N25	124	140	3"	Weight	52	112	52	119	75	149
				Seismic	162	134	162	516	842	701
				Thermal	140	191	190	483	800	800
N26	124	140	3"	Weight	52	182	52	119	75	75
				Seismic	162	182	204	1032	701	701
				Thermal	140	130	190	400	800	800
N27	124	140	2" OD	Weight	52	84	52	119	75	75
				Seismic	162	108	162	468	701	701
				Thermal	140	130	190	400	800	800
N28	75	133	4"	Weight	87	194	87	287	135	359
				Seismic	298	198	274	878	1320	1320
				Thermal	240	210	320	760	2406	1510
N29	75	133	4"	Weight	87	140	87	216	135	135
				Seismic	274	183	274	878	1320	1320
				Thermal	240	210	320	886	2999	1510
N30	75	133	4"	Weight	87	207	87	216	135	413
				Seismic	274	183	274	878	1320	1320
				Thermal	618	210	580	1592	2620	1510
N31	75	133	4"	Weight	87	204	87	216	135	282
				Seismic	338	225	274	878	1320	1425
				Thermal	240	210	321	820	1751	1510
N32	60	133	2" OD	Weight	60	72	60	90	90	90
				Seismic	128	84	128	190	285	285
				Thermal	137	120	183	203	405	405
N33 (Spare)	N/A	N/A	2" OD	Weight	50	60	50	75	75	75
				Seismic	106	70	106	158	237	237
				Thermal	70	60	100	110	210	210

Nozzle	Design Pressure (psig) (Note E)	Design Temp (°F) (Note E)	Size	Load Type	Loads - lbs			Moments - ft-lbs		
					Fx	Fy	Fz	Mx	My	Mz
N34 (Spare)	N/A	N/A	2"	Weight	50	60	50	75	75	75
				Seismic	106	70	106	158	237	237
				Thermal	70	60	100	110	210	210
N35	75	192	4"	Weight	87	140	87	216	135	135
				Seismic	274	183	274	878	1320	1320
				Thermal	240	378	320	760	1510	1605
N36	125	150	2"	Weight	50	60	50	75	75	75
				Seismic	106	70	106	158	237	237
				Thermal	70	74	100	110	210	210
N37	125	150	2"	Weight	50	180	50	75	75	75
				Seismic	106	98	106	158	237	237
				Thermal	70	69	100	110	210	210
N38	125	150	2"	Weight	50	60	50	75	75	75
				Seismic	106	70	106	158	237	237
				Thermal	70	93	100	138	210	210
N39	125	150	2"	Weight	50	74	50	75	75	75
				Seismic	106	70	106	158	237	329
				Thermal	70	123	100	110	210	210
N40 △8 (Note F)	60	138	2"	Weight	50	60	50	75	75	75
				Seismic	106	70	106	158	237	237
				Thermal	70	60	100	110	210	210
N41 △8 (Note F)	119	155	3"	Weight	52	84	52	119	75	75
				Seismic	162	108	162	468	701	701
				Thermal	140	146	190	400	800	800
N42	169	138	3"	Weight	89	272	52	119	75	368
				Seismic	162	228	162	468	701	701
				Thermal	140	130	190	400	800	800
N43	N/A	N/A	6" Parent	Weight	N43 is parent nozzle, nozzle loads are applied via N43A, 43B, N43C					
				Seismic						
				Thermal						
N43A (Note C)	15	130	1"	Weight	15	20	15	20	20	20
				Seismic	30	20	30	37	55	55
				Thermal	20	47	30	42	50	50
N43B (Note C)	15	130	1"	Weight	15	20	15	20	20	20
				Seismic	30	20	30	37	55	55
				Thermal	20	47	30	48	50	50
N43C (Note C)	15	130	1"	Weight	15	20	15	20	20	20
				Seismic	30	20	30	37	55	55
				Thermal	20	47	30	50	50	50
N44	N/A	N/A	6" Parent	Weight	N44 is parent nozzle, nozzle loads are applied via N44A, 44B, N44C					
				Seismic						
				Thermal						
N44A (Note C)	15	130	1"	Weight	15	20	15	20	20	20
				Seismic	30	20	30	37	55	55
				Thermal	20	47	30	50	50	50

Nozzle	Design Pressure (psig) (Note E)	Design Temp (°F) (Note E)	Size	Load Type	Loads - lbs			Moments - ft-lbs		
					Fx	Fy	Fz	Mx	My	Mz
N44B (Note C)	15	130	1"	Weight	15	20	15	20	20	20
				Seismic	30	20	30	37	55	55
				Thermal	20	47	30	50	50	50
N44C (Note C)	15	130	1"	Weight	15	20	15	20	20	20
				Seismic	30	20	30	37	55	55
				Thermal	20	47	30	50	50	50
N45	50	237	4"	Weight	100	150	100	250	250	250
				Seismic	274	183	274	878	1320	1320
				Thermal	240	210	320	760	1510	1510
N46	37	205	3"	Weight	52	378	52	119	75	75
				Seismic	162	220	214	594	701	701
				Thermal	140	130	190	400	800	800
N47	60	188	2"	Weight	60	72	60	90	90	90
				Seismic	128	84	128	190	285	285
				Thermal	137	120	183	203	405	405
N48 (Spare)	N/A	N/A	2"	Weight	50	60	50	75	75	75
				Seismic	106	70	106	158	237	237
				Thermal	70	60	100	110	210	210
N49 (Spare)	N/A	N/A	6"	Weight	210	335	210	598	374	374
				Seismic	663	443	663	2423	3638	3638
				Thermal	590	530	790	2140	4280	4280
N50	15	188	8"	Weight	234	373	234	741	464	464
				Seismic	734	490	734	3206	4418	4418
				Thermal	710	640	950	2870	5720	5720
N52	124	138	2"	Weight	50	60	50	75	75	75
				Seismic	106	70	106	158	237	237
				Thermal	70	60	100	110	210	210
N53	15	188	2" OD	Weight	50	60	50	75	75	75
				Seismic	106	70	106	158	237	237
				Thermal	70	60	100	110	210	210
N54	N/A	N/A	24" OD	Weight	Manway (No Loads Applied)					
				Seismic						
				Thermal						
N55	125	237	6"	Weight	210	377	210	598	374	394
				Seismic	932	449	663	2423	3638	3638
				Thermal	1468	530	790	2140	4280	4280
N56	125	237	6"	Weight	210	335	210	598	374	374
				Seismic	1316	443	663	2423	3638	3638
				Thermal	1080	720	790	2140	4280	4280
N57	150	160	3"	Weight	52	117	52	130	75	75
				Seismic	162	108	162	468	701	701
				Thermal	140	130	190	418	800	800
N58 (Spare)	N/A	N/A	4"	Weight	87	212	87	216	135	393
				Seismic	274	208	274	878	1320	1320
				Thermal	491	210	320	760	1510	1510

Nozzle	Design Pressure (psig) (Note E)	Design Temp (°F) (Note E)	Size	Load Type	Loads - lbs			Moments - ft-lbs		
					Fx	Fy	Fz	Mx	My	Mz
N61	15	130	2" OD	Weight	50	60	50	75	75	75
				Seismic	106	70	106	158	237	237
				Thermal	70	60	100	110	210	210

Notes for Nozzle Loads

A. Direction of load application for shell nozzles is per diagrams in 24590-WTP-3PS-MV00-T0001 Appendix A.

B. For nozzles in head: x = North/South, y = Vertical, and z = East/West - Vessel 0° defined as North.

C. Values provided at plate on top of parent nozzle. 8

D. Nozzle loads shown are to be used in place of those specified in 24590-WTP-3PS-MV00-T0001 – do not apply any thermal reduction factors.

E. Nozzle Pressures and Temperatures to be used to qualify the nozzles only 8

F. HPAV nozzle loads are 'on hold' due to potential HPAV concerns. Loading to be confirmed by subsequent HPAV analysis. 8

EQUIPMENT QUALIFICATION DATASHEET (EQD)

Equipment Identification

Component Tag Number	24590-PTF-MV-PWD-VSL-00044	Safety Classification	☒ SC ☐ SS ☐ APC ☐ SDC ☐ SDS ☐ RRC All Subcomponents are considered SC
Manufacturer / Supplier	Northwest Copper Works		
Requisition Number	24590-QL-MRE-MVA0-00001		
Model	Custom	Seismic Category	☒ SC-I ☐ SC-II ☐ SC-III ☐ SC-IV All subcomponents are designed to SC-I
Description (Include descriptive text [e.g., location, elevation])	Plant Wash Vessel, Pre-Treatment Column Line K/15, elevation 0'-0"		
Safety Function(s)	PWD-VSL-00044 (parent vessel) is considered a high active process vessel credited to prevent spills of large quantities of high activity process liquid and provide primary confinement for radioactive releases. Pulse Jet Mixers (PJMs) provide a mixing function in the vessel to prevent hydrogen accumulation. Vessel level instrumentation, which includes the bubbler tubes, provides level monitoring to prevent overflows and ensure proper headspace volumes are maintained for hydrogen dilution.		

Seismic Safety Function	☒ Yes ☐ No	Room Number(s):	P-0104, Pre-Treatment Facility
Maintenance Accessible	☐ Yes ☒ No	Method of Maintenance Access:	☐ Remote ☐ Hands On ☒ None
Seismic Operability Requirements:	☒ During Seismic Event	☒ After Seismic Event	
ITS Equipment Type:	☒ Passive Mechanical	☐ Active Mechanical	☐ Electrical

Equipment Environmental Qualification (EEQ)

Environment ☒ Mild ☐ Harsh Contamination Class: C5 Radiation Class: R5	Hi Rad Service ☒ Yes ☐ No	Design Life (yrs) ☒ 40 ☐ Other ____

Parameter Type/Units	Parameter Value	Time Duration (number)	Time Units	WTP Document Number (BUYER)	Submittal Number (SELLER)
Normal					
Normal High Temperature (°F)	113	40	yrs	24590-PTF-U0D-W16T-00001	E-Note 1
Normal Low Temperature (°F)	59	40	yrs	24590-PTF-U0D-W16T-00001	E-Note 1
Normal High Relative Humidity (%RH)	90 /8	40	yrs	24590-PTF-U0D-W16T-00001	E-Note 1
Normal Low Relative Humidity (%RH)	5	40	yrs	24590-PTF-U0D-W16T-00001	E-Note 1
Normal High Pressure (in.-w.g.)	0 (E-Note 2)	40	yrs	24590-PTF-U0D-W16T-00001	E-Note 1
Normal Low Pressure (in.-w.g.)	(-) 1.4 (E-Note 2)	40	yrs	24590-PTF-U0D-W16T-00001	E-Note 1
Normal Radiation Dose Rate (mR/hr)	533000 (E-Note 4)	40 (E-Note 7)	yrs	24590-PTF-U0D-W16T-00001	E-Note 1
Vibration Magnitude (g)	N/A	N/A	N/A	N/A	N/A
Vibration Frequency (Hz)	N/A	N/A	N/A	N/A	N/A
Additional Normal Information:	N/A				

EQUIPMENT QUALIFICATION DATASHEET (EQD)

Equipment Environmental Qualification (EEQ) *(continued)*

Parameter Type/Units	Parameter Value	Time Duration (number)	Time units	WTP Document Number (BUYER)	Submittal Number (SELLER)
Abnormal					
Abnormal High Temperature (°F)	127 8	8	hrs/yr	24590-PTF-U0D-W16T-00001	E-Note 1
Abnormal Low Temperature (°F)	40	8	hrs/yr	24590-PTF-U0D-W16T-00001	E-Note 1
Abnormal High Relative Humidity (%RH)	100c 8	1 8	hrs/yr	24590-PTF-U0D-W16T-00001	E-Note 1
Abnormal Low Relative Humidity (%RH)	6 8	24 8	hrs/yr	24590-PTF-U0D-W16T-00001	E-Note 1
Abnormal High Pressure (in.-w.g.)	4 (E-Note 2)	8	hrs/yr	24590-PTF-U0D-W16T-00001	E-Note 1
Abnormal Low Pressure (in.-w.g.)	(-) 7.3 (E-Note 2)	8	hrs/yr	24590-PTF-U0D-W16T-00001	E-Note 1
Abnormal Radiation Dose Rate (mR/hr)	533000 E-Note 4)	0 (E-Note 7)	yrs	24590-PTF-U0D-W16T-00001	E-Note 1
Wet Sprinkler System Present	No	N/A	N/A	24590-PTF-U0D-W16T-00001	E-Note 1
Additional Abnormal Information	100c = 100% RH condensing 8				
Design Basis Events (DBE)					
DBE High Temperature (°F)	135 8	1000	hrs	24590-PTF-U0D-W16T-00001	E-Note 1
DBE Low Temperature (°F)	40	1000	hrs	24590-PTF-U0D-W16T-00001	E-Note 1
DBE High Relative Humidity (%RH)	100c 8	40 8	hrs	24590-PTF-U0D-W16T-00001	E-Note 1
DBE Low Relative Humidity (%RH)	6	1000	hrs	24590-PTF-U0D-W16T-00001	E-Note 1
DBE High Pressure (in.-w.g.)	4 (E-Note 2)	1000	hrs	24590-PTF-U0D-W16T-00001	E-Note 1
DBE Low Pressure (in.-w.g.)	(-) 7.3 (E-Note 2)	1000	hrs	24590-PTF-U0D-W16T-00001	E-Note 1
DBE Radiation Dose Rate (mR/hr)	533000 (E-Note 4)	0 (E-Note 7)	yrs	24590-PTF-U0D-W16T-00001	E-Note 1
Flood Height (ft)	2.08	1000	hrs	24590-PTF-U0D-W16T-00001	E-Note 1
Submergence (ft)	N/A (E-Note 5)	N/A	N/A	N/A	N/A
Chemical/Spray Exposure	Yes	12.5 8	hrs	24590-PTF-U0D-W16T-00001	E-Note 1
Additional DBE Information	100c = 100% RH condensing 8				

EQUIPMENT QUALIFICATION DATASHEET (EQD)

DBE Chemical Exposure Details	
DBE Chemical Types/Concentrations	Nitric Acid (2M) Sodium Hydroxide (2M) 8 Sodium Permanganate (1M) Strontium Nitrate (1M) Process Condensate Water 6

Interfaces (Electrical)	
Power Supply Voltage (VAC, VDC)	N/A
Power Supply Frequency (Hz)	N/A
Power Connection Method	N/A
I/O Signals to/from Equipment	N/A
I/O Connection Method	N/A

Interfaces (Mechanical)	
Mounting Configuration (orientation)	Vertical Mounted , Skirt, Located at 0'-0" in the Pre Treatment Facility, Column Lines K and 15
Mounting Method (bolts, welds, etc.)	Welded skirt to ring beam welded to embedment plates. Embedment plate details per 24590-PTF-DD-S13T-00039, 24590-PTF-DD-S13T-00036, 24590-PTF-DD-S13T-00043, and 24590-PTF-DD-S13T-00045 provided to the vendor in the material requisition
Auxiliary Devices	Pulse Jet Mixers: PWD-PJM-00021, PWD-PJM-00022, PWD-PJM-00023, PWD-PJM-00024, PWD-PJM-00025, PWD-PJM-00026, PWD-PJM-00027, PWD-PJM-00028; Charge Vessels: PWD-VSL-00121, PWD-VSL-00122, PWD-VSL-00123, PWD-VSL-00124, PWD-VSL-00125. All auxiliary equipment is located internal to the vessel

Equipment Seismic Qualification (ESQ)

Parameter	Title	Reference/Document Number	Version / Revision	Remarks
WTP Seismic Design Specification (BUYER)	Engineering Specification for Seismic Qualification of Seismic Category I/II Equipment and Tanks Engineering Specification for Seismic Qualification Criteria for Pressure Vessels	24590-WTP-3PS-SS90-T0001 24590-WTP-3PS-MV00-T0002	2 2	N/A
Specified Seismic Load 8 (BUYER)	Seismic Analysis of Pretreatment Building - WSGM In-Structure Response Spectra (ISRS)	24590-PTF-S0C-S15T-00057	A	CCN: 188859: WSGM ISRS Curves: 67, 68, and 69.
Design Seismic Load (SELLER	N/A	N/A	N/A	To be provided by the Buyer and E-Note 3 8
Qualification Method (SELLER)	N/A	N/A	N/A	Dynamic Analysis utilizing response spectra curves
Qualification Report Number (SELLER)	N/A	N/A	N/A	To be provided by the Buyer and E-Note 3 8
Submittal Number (BUYER)	N/A	N/A	N/A	N/A

EQUIPMENT QUALIFICATION DATASHEET (EQD)

Equipment Qualification Notes and Additional Information

E-Note 1: BNI (BUYER) shall perform Equipment Environmental Qualification in accordance with 24590-WTP-DC-ENG-06-001, Design Criteria for Equipment Seismic and Environmental Qualification.

E-Note 2: Where pressure is given in inches of water column (in-w.c.) in the source document, it is generally assumed that this is in reference to atmospheric pressure and is therefore equivalent to inches of water gage (in-w.g.)

E-Note 3: BNI (BUYER) shall perform Equipment Seismic Qualification in accordance with the listed parameters and the applicable specification requirements. 8

E-Note 4: Radiation Dose Rates are for determining shielding requirements only for the black cell and are not at the source (vessel). Since the vessel is all metallic and the source has no neutron components for material embrittlement, the dose rates are of no concern on the vessel or its subcomponents.

E-Note 5: Flood height is 2.08 ft above the floor, bottom of vessel is above this level therefore, no submergence evaluation is required.

E-Note 6: Environmental data shown is for the room only.

E-Note 7: Normal, Abnormal, and DBE dose rates are the same, therefore, abnormal & DBE doses do not add to total integrated dose based on normal dose rates over 40 years.

DOE Radioactive Materials Disclaimer:
Please note that source, special nuclear and byproduct materials, as defined in the Atomic Energy Act of 1954 (AEA), are regulated at the US Department of Energy (DOE) facilities exclusively by DOE acting pursuant to its AEA authority. DOE asserts, that pursuant to the AEA, it has sole and exclusive responsibility and authority to regulate source, special nuclear, and byproduct materials at DOE-owned nuclear facilities. Information contained herein on radionuclides is provided for process description purposes only.

Screening / Evaluation Required? If yes per 24590-WTP-GPP-SREG-002, E&NS signature required below	X	Yes		No

Approval

Rev	Description	System Engineer	Vessel Engineer	Checked	Reviewed/ MET	E&NS	Approved	Date
0	Issued for Purchase	C. Hahn	H. K.	US/CS	N/A	N/A	S. Kirk	10/10/02
1	Revised as noted	N.C	H.K	YH/CS	JJ	N/A	MWH	08/28/03
2	Revised as noted	N. Crawford	H. Khurana	Y. Hovanski C. Slater	J. Julyk	N/A	C. Morley for M. Hoffmann	2/5/04
3	Added hydrodynamic loads, erosion allowances, and other revisions as noted.	N. Crawford	H. Khurana	Y. Hovanski R. Tiwari	J. Julyk	N/A	C. Morley for M. Hoffmann	9/8/04
4	Added note 11, deleted note 8 and revised note 9. Incorporated Environmental Qualifications. Revised as Noted.	N. Crawford	H. Khurana	SV/CS	J. Julyk	N/A	M. Hoffmann	03/04/05
5	Revised Notes on page 2 as noted	K.Ebbers	H. Khurana	SV/CS	RES	N/A	M. Hoffmann	07/28/05
6	Revised per note 12 on page 2 and as noted	K. Ebbers	H. Khurana	J. Polani	D. Adler C. Slater	N/A	J. Julyk	10/28/05
7	Revised per Note 14 and as noted, due to revised load conditions, new load conditions for MOB, HPAV, single overblow, and revised process conditions	T Campbell	M Seed	W Wilcox	B Makadia	G Hendricks	J Julyk	03/20/08
8	Revised per Note 15 and as noted by revision triangles.	T Campbell Theresa Campbell	W Wilcox	M Seed M A Seed	D Adler	G Hendricks G. Hendricks	J Julyk	5/24/10

ATTACHMENT 1: Page 1 of 2 (8)
REFERENCES for Data Sheet: 24590-PTF-MVD-PWD-00002, Rev 8
Vessel Tag: 24590-PTF-MV-PWD-VSL-00044

(For BNI Use only)

Data	Document #	Rev	Document Title/ Comments
Quality Level	24590-PTF-M6-PWD-00002001	0	*P&ID - PTF Plant Wash & disposal System Effluent Collection PWD-VSL-00044*
Seismic Category	24590-PTF-M6-PWD-00002001	0	*P&ID - PTF Plant Wash & disposal System Effluent Collection PWD-VSL-00044*
Design Specific Gravity	24590-WTP-RPT-ENG-07-007 24590-PTF-MVC-PWD-00028	0A 0A	*Process Stream Properties, Section 4.21.2.2* *Process Data for Plant Wash Vessel 24590-PTF-MV-PWD-VSL-00044*
Max Operating Volume	24590-PTF-MVC-PWD-00020	B	*Vessel Sizing Calculation for the Plant Wash Vessel (PWD-VSL-00044), Table 8-1*
Total Volume	24590-PTF-MVC-PWD-00020	B	*Vessel Sizing Calculation for the Plant Wash Vessel (PWD-VSL-00044), Table 8-1*
Inside Diameter	24590-PTF-MVC-PWD-00020	B	*Vessel Sizing Calculation for the Plant Wash Vessel (PWD-VSL-00044)*
Length TL-TL	24590-PTF-MVC-PWD-00020	B	*Vessel Sizing Calculation for the Plant Wash Vessel (PWD-VSL-00044)*
Operating Pressure (external)	24590-PTF-M6C-PVP-00017	A	*HADCRT Analysis of PTF PVP System at Various Operating Scenarios, Attachment C*
Design Pressure (internal)	24590-WTP-DB-ENG-01-001	1O	*Basis of Design*
Design Pressure (external)	24590-PTF-M6C-PVP-00017 24590-PTF-MVC-10-00003	A C	*HADCRT Analysis of PTF PVP System at Various Operating Scenarios, Attachment C* *PTF Vessel Cyclic Datasheet Inputs*
Operating Temp	24590-PTF-MVC-10-00003	C	*PTF Vessel Cyclic Datasheet Inputs*
Design Temp	24590-WTP-RPT-ENG-07-007	0A	*Process Stream Properties, Section 4.22*
Corrosion Allowance, Erosion allowance	24590-PTF-N1D-PWD-00001 24590-WTP-M0C-50-00004	5 E	*PWD-VSL-00044 - (PTF) - Plant Wash Vessel* *Wear Allowance for WTP Waste Slurry Systems, Table 10-7*
Materials of Construction	24590-PTF-N1D-PWD-00001	5	*PWD-VSL-00044 - (PTF) - Plant Wash Vessel*
Design Pressure (PJM)	24590-PTF-MVC-10-00003	C	*PTF Vessel Cyclic Datasheet Inputs*
Operating Pressure (PJM)	24590-PTF-MVC-10-00003	C	*PTF Vessel Cyclic Datasheet Inputs*
Operating Temperature (PJM)	N/A	N/A	*Same as parent vessel*
Cyclic Data (Vessel)	24590-PTF-MVC-10-00003	C	*PTF Vessel Cyclic Datasheet Inputs*
Cyclic Data (PJM)	24590-PTF-MVC-10-00003	C	*PTF Vessel Cyclic Datasheet Inputs*
Cyclic Data (Charge Vessels)	24590-PTF-MVC-10-00003	C	*PTF Vessel Cyclic Datasheet Inputs*
Charge Vessel (Design Press)	24590-PTF-MVC-10-00003	C	*PTF Vessel Cyclic Datasheet Inputs*
Hydrodynamic Loads	24590-WTP-MVC-50-00001	A	*Hydrodynamic Loads for Normal PJM Operation in Vessels with Newtonian Fluids / Section 8 for eight (8) PJMs*
Single PJM Overblow Loads	24590-WTP-MVC-50-00001	A	*Hydrodynamic Loads for Normal PJM Operation in Vessels with Newtonian Fluids*
PJM Overblow Loads	24590-WTP-MVC-50-00011	B	*Pulse Jet Mixer Overblow Vessel Loads*
Single Overblow Cycles	24590-PTF-MVC-10-00003	C	*PTF Vessel Cyclic Datasheet Inputs (24590-PTF-MVE-10-00004)*
Multiple Overblow Cycles	24590-PTF-MVC-10-00003	C	*PTF Vessel Cyclic Datasheet Inputs (24590-PTF-MVE-10-00004)*

REFERENCES for Data Sheet: 24590-PTF-MVD-PWD-00002, Rev 8
Vessel Tag: 24590-PTF-MV-PWD-VSL-00044

(For BNI Use only)

Data	Document #	Rev	Document Title/ Comments
Nozzle Loads	CCN 127617	N/A	*Nozzle Loads for UFP-VSL-00001A/B, PWD-VSL-00044, Official*
Nozzle Design Pressures and Temperatures	24590-PTF-M6X-PWD-00113	2	*Pipeline List for P&ID 24590-PTF-M6-PWD-00046, Rev 2*
	24590-PTF-M6X-PWD-00325	0	*MS Line List for 24590-PTF-M6-PWD-00002001, Rev 0*
	24590-PTF-M6X-UFP-00148	0	*MS Line List for P&ID 24590-PTF-M6-UFP-00007007, Rev 0*
	24590-PTF-M6X-UFP-00174	0	*MS Line List for P&ID 24590-PTF-M6-UFP-00008007, Rev 0*
	24590-PTF-M6X-UFP-00199	0	*MS Line List for P&ID 24590-PTF-M6-UFP-00009006, Rev 0*
	24590-PTF-M6X-UFP-00362	0	*MS Line List for P&ID 24590-PTF-M6-UFP-00011005, Rev 0*
Overflow Sizing	24590-PTF-MVC-PWD-00020	B	*Vessel Sizing Calculation for the Plant Wash Vessel (PWD-VSL-00044)*
	24590-PTF-MVC-PWD-00038	B	*Overflow Sizing for Vessel PWD-VSL-00044*

24590-PTF-MV-PWD-00010001

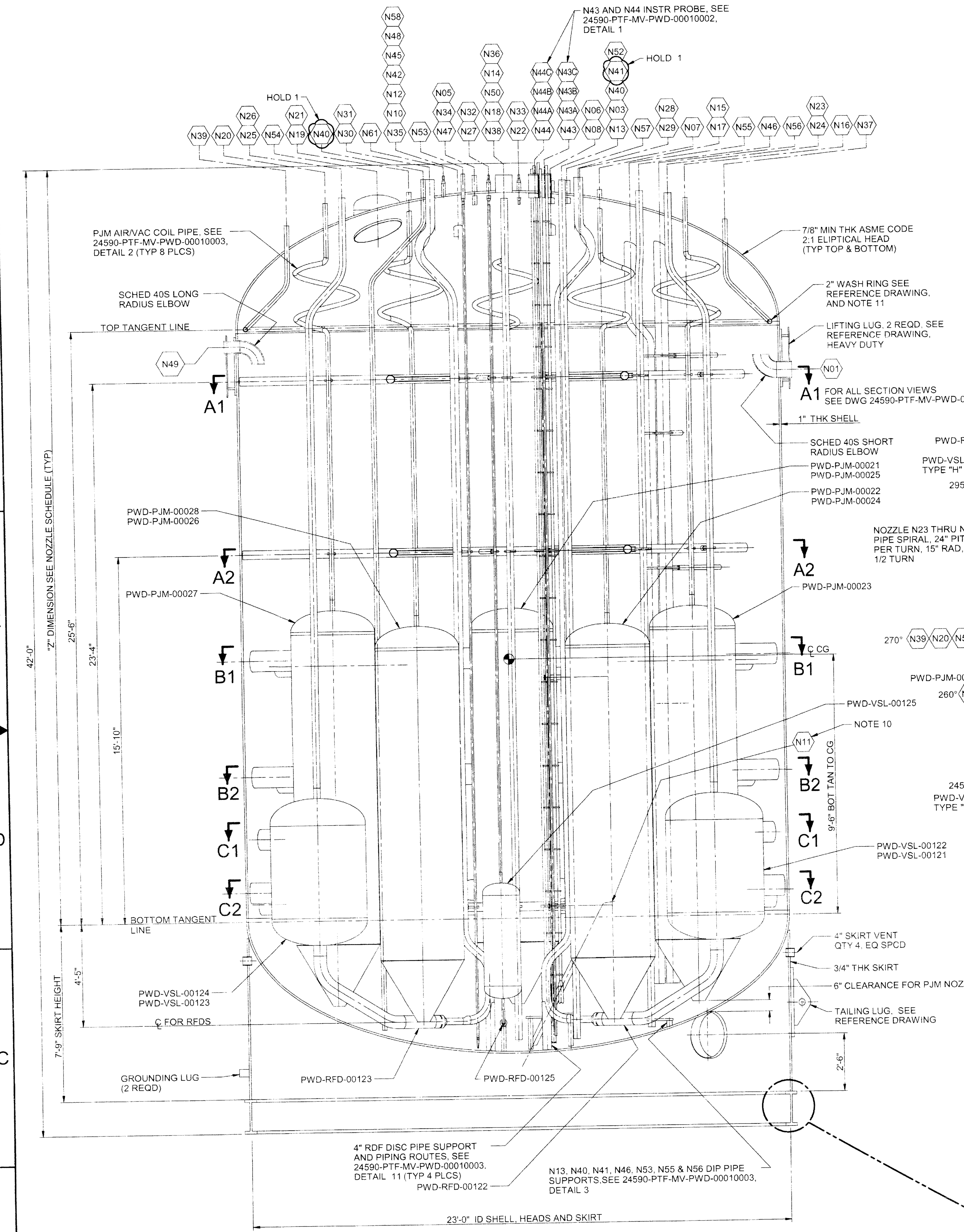

ELEVATION

SEE PLAN VIEW FOR TRUE ORIENTATION OF NOZZLES AND COMPONENTS

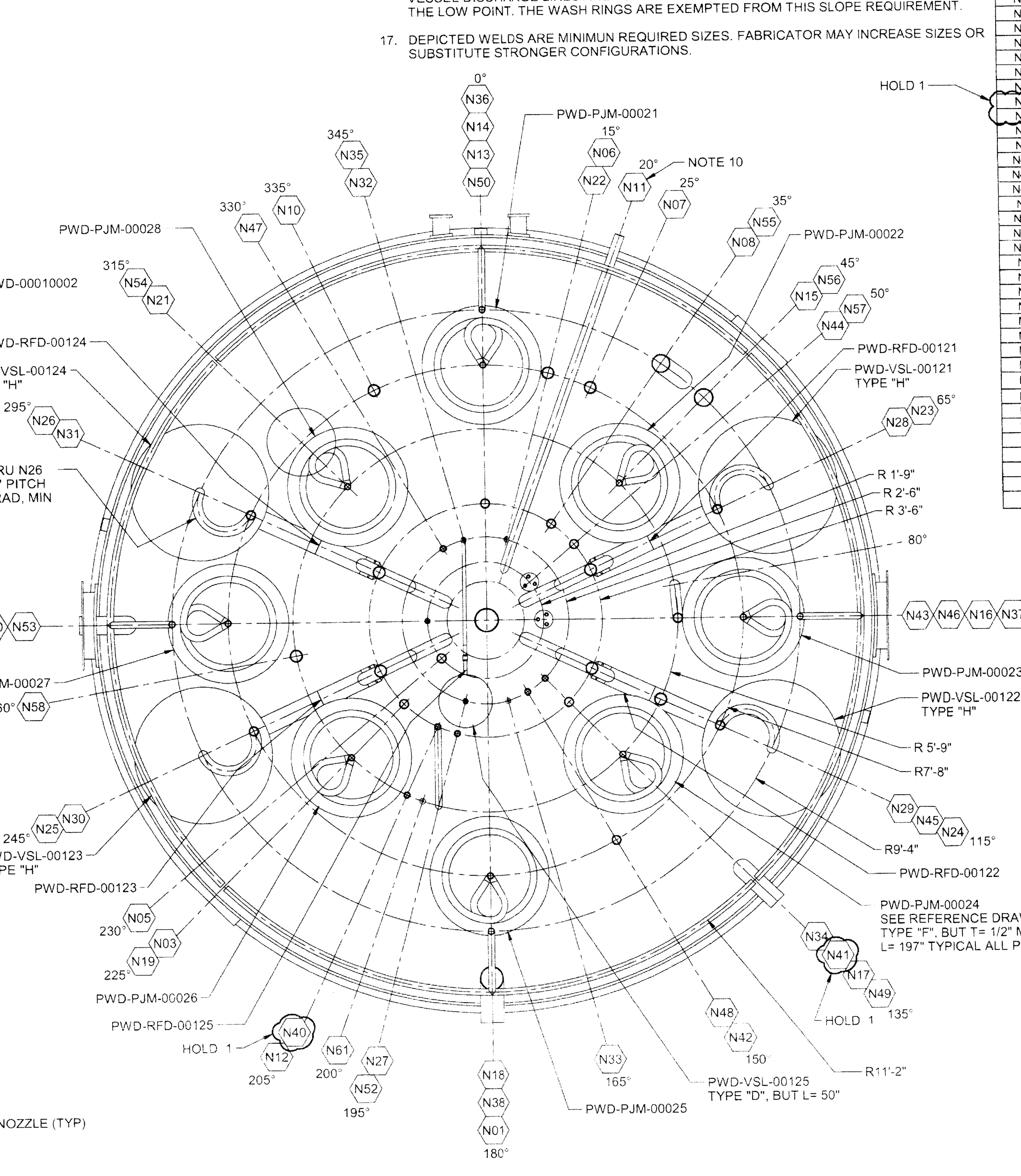

PLAN

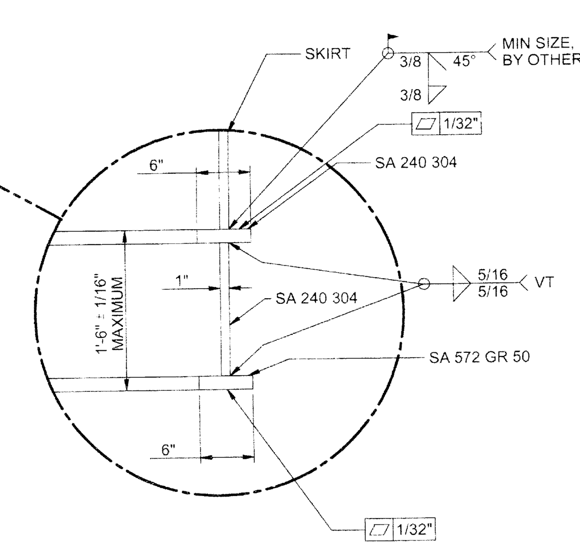

RING BEAM DETAIL

INTEGRAL REINFORCEMENTS		
NOZZLE	REINF. DIA	THICK
N13	10"	1 1/4"
N40	6"	1 1/4"
N44	12 3/4"	1 1/8"
N55	12 3/4"	1 1/8"
N56	12 3/4"	1 1/8"

HOLD 1

GENERAL NOTES: CONTINUED FROM ZONE D-2

10. NOZZLE 11 IS TO HAVE A 1:50 (MIN) SLOPE ON ITS HORIZONTAL SECTION, TOWARDS CENTER OF VESSEL, W/ A 7" PROJECTION PAST SHELL OF VESSEL.
11. WASH RINGS ARE TO BE SUPPORTED, FROM TOP, BY 1" SCHED 160S HANGERS @ 4 LOCATIONS EACH:

    NORTH SEGMENT: 320°, 340°, 20°, 40°
    EAST SEGMENT: 50°, 70°, 110°, 130°
    SOUTH SEGMENT: 140°, 160°, 200°, 220°
    WEST SEGMENT: 230°, 250°, 290°, 310°

12. WELDS FOR INTERNAL PIPES ACTING AS SUPPORTS ARE TO BE FULL PENETRATION WELDS WITH 1/4" MIN CAPPING FILLET-WELDS (WHERE POSSIBLE), UNLESS OTHERWISE NOTED OR APPROVED BY BUYER.
13. THIS DOCUMENT CONTAINS INFORMATION PERTINENT TO AN ACCIDENT ANALYSIS CALCULATION AND RECEIVES A SCREENING FROM E&NS, IN ACCORDANCE WITH PROCEDURES, ANYTIME THE DOCUMENT IS MODIFIED.
14. DIP LINES FOR NOZZLES N40, N46 AND N55 HAVE PAIRS OF 45° ELBOWS LOCATED IN THE UPPER HEAD SPACE OF THE VESSEL TO JOG THE DIP LINES TO THE POSITIONS INDICATED ON THIS SHEET.
15. WHERE LENGTH OF SUPPORT BRACKET (I.E. CENTER LINE OF SUPPORTED PIPE TO FAR END OF 2" PIPE) IS 12" OR LESS, THE FABRICATOR MAY USE JUST 1" OR 1.5" (DEPENDENT OR SUPPORTED DIP PIPE DIAMETER) THICK PLATE WITH THE SIDES OF THE PLATE BEING PARALLEL TO EACH OTHER IN-LIEU OF THE 2" PIPE.
16. ALL PROCESS PIPES ARE TO MAINTAIN A MINIMUM 1:20 SLOPE WITH NO INTERMEDIARY HIGH POINTS, TO MITIGATE ANY POOLING OF FLUID IN THE PROCESS LINES. THE CHARGE VESSEL DISCHARGE LINES ARE TO BE SLOPED TOWARDS THE RFDS, WITH RFDS AS THE LOW POINT. THE WASH RINGS ARE EXEMPTED FROM THIS SLOPE REQUIREMENT.
17. DEPICTED WELDS ARE MINIMUN REQUIRED SIZES. FABRICATOR MAY INCREASE SIZES OR SUBSTITUTE STRONGER CONFIGURATIONS.

NOZZLE	SIZE	SCHED/WALL	SERVICE/REMARKS	"Z" DIM	REF DWG-DET	CONN. PIPE SCHED.
N01	8"	80S	OVERFLOW	24'-6"	24590-WTP-MV-M59T-00016001 DET 3	8"-10S
N02			NOT USED			
N03	3"	80S	SPARE	31'-9"	24590-WTP-MV-M59T-00016001 DET 2	CAPPED
N04			NOT USED			
N05	3"	80S	SPARE	32'-0"	24590-WTP-MV-M59T-00016001 DET 2	CAPPED
N06	4"	80S	INLET	30'-7"	24590-WTP-MV-M59T-00016001 DET 2	4"-40S
N07	4"	80S	INLET	30'-7"	24590-WTP-MV-M59T-00016001 DET 2	4"-40S
N08	3"	80S	INLET	31'-9"	24590-WTP-MV-M59T-00016001 DET 2	3"-40S
N09			NOT USED			
N10	4"	80S	INLET	30'-7"	24590-WTP-MV-M59T-00016001 DET 2	4"-40S
N11	2"	160S	OUTLET TO EJECTOR	0'-8"	24590-WTP-MV-M59T-00016001 DET 3	2"-40S
N12	2"	160S	AIR PURGE	31'-3"	24590-WTP-MV-M59T-00016001 DET 2	2"-40S
N13	3"	160S	INLET WITH DIP PIPE	31'-9"	24590-WTP-MV-M59T-00016001 DET 4, SEE NOTE 8	3"-40S
N14	2"	160S	AIR/VACUUM TO PWD-PJM-00021	30'-7"	24590-WTP-MV-M59T-00016001 DET 3	2"-40S
N15	2"	160S	AIR/VACUUM TO PWD-PJM-00022	31'-3"	24590-WTP-MV-M59T-00016001 DET 3	2"-40S
N16	2"	160S	AIR/VACUUM TO PWD-PJM-00023	30'-7"	24590-WTP-MV-M59T-00016001 DET 3	2"-40S
N17	2"	160S	AIR/VACUUM TO PWD-PJM-00024	31'-3"	24590-WTP-MV-M59T-00016001 DET 3	2"-40S
N18	2"	160S	AIR/VACUUM TO PWD-PJM-00025	30'-7"	24590-WTP-MV-M59T-00016001 DET 3	2"-40S
N19	2"	160S	AIR/VACUUM TO PWD-PJM-00026	31'-3"	24590-WTP-MV-M59T-00016001 DET 3	2"-40S
N20	2"	160S	AIR/VACUUM TO PWD-PJM-00027	30'-7"	24590-WTP-MV-M59T-00016001 DET 3	2"-40S
N21	2"	160S	AIR/VACUUM TO PWD-PJM-00028	31'-3"	24590-WTP-MV-M59T-00016001 DET 3	2"-40S
N22	2" OD x 1"	160S	SPARE	31'-11"	24590-WTP-MV-M59T-00016001 DET 7	CAPPED
N23	3"	80S	AIR/VACUUM TO PWD-VSL-00121	30'-7"	24590-WTP-MV-M59T-00016001 DET 3	3"-40S
N24	3"	80S	AIR/VACUUM TO PWD-VSL-00122	30'-7"	24590-WTP-MV-M59T-00016001 DET 3	3"-40S
N25	3"	80S	AIR/VACUUM TO PWD-VSL-00123	30'-7"	24590-WTP-MV-M59T-00016001 DET 3	3"-40S
N26	3"	80S	AIR/VACUUM TO PWD-VSL-00124	30'-7"	24590-WTP-MV-M59T-00016001 DET 3	3"-40S
N27	2" OD x 1"	160S	AIR/VACUUM TO PWD-VSL-00125	31'-11"	24590-WTP-MV-M59T-00016001 DET 7	1"-40S
N28	4"	80S	OUTLET FROM PWD-RFD-00121	31'-9"	24590-WTP-MV-M59T-00016001 DET 3	4"-40S
N29	4"	80S	OUTLET FROM PWD-RFD-00122	31'-9"	24590-WTP-MV-M59T-00016001 DET 3	4"-40S
N30	4"	80S	OUTLET FROM PWD-RFD-00123	31'-9"	24590-WTP-MV-M59T-00016001 DET 3	4"-40S
N31	4"	80S	OUTLET FROM PWD-RFD-00124	31'-9"	24590-WTP-MV-M59T-00016001 DET 3	4"-40S
N32	2" OD x 1"	160S	OUTLET FROM PWD-RFD-00125	31'-11"	24590-WTP-MV-M59T-00016001 DET 7	1"-40S
N33	2" OD x 1"	160S	SPARE	31'-11"	24590-WTP-MV-M59T-00016001 DET 7	CAPPED
N34	2"	160S	SPARE	31'-11"	24590-WTP-MV-M59T-00016001 DET 2	CAPPED
N35	4"	80S	INLET	30'-7"	24590-WTP-MV-M59T-00016001 DET 2	4"-40S
N36	2"	80S	INLET TO WASH RING	29'-8"	24590-WTP-MV-M59T-00016001 DET 3	2"-40S
N37	2"	80S	INLET TO WASH RING	29'-8"	24590-WTP-MV-M59T-00016001 DET 3	2"-40S
N38	2"	80S	INLET TO WASH RING	29'-8"	24590-WTP-MV-M59T-00016001 DET 3	2"-40S
N39	2"	80S	INLET TO WASH RING	29'-8"	24590-WTP-MV-M59T-00016001 DET 3	2"-40S
N40	2"	160S	INLET WITH DIP PIPE	31'-9"	24590-WTP-MV-M59T-00016001 DET 4	2"-40S
N41	3"	80S	INLET WITH DIP PIPE	31'-9"	24590-WTP-MV-M59T-00016001 DET 4	3"-40S
N42	3"	80S	INLET	30'-7"	24590-WTP-MV-M59T-00016001 DET 2	3"-40S
N43	6"	1/2" WALL	INSTRUMENTATION	32'-2"	24590-WTP-MV-M59T-00016003 DET 26, SEE NOTE 9	N/A
N43A	1"	160S	BALANCE	32'-7"	24590-WTP-MV-M59T-00016003 DET 26, SEE NOTE 9	1"-40S
N43B	1"	160S	DENSITY	32'-8"	24590-WTP-MV-M59T-00016003 DET 26, SEE NOTE 9	1"-40S
N43C	1"	160S	LEVEL	32'-9"	24590-WTP-MV-M59T-00016003 DET 26, SEE NOTE 9	1"-40S
N44	6"	1/2" WALL	INSTRUMENTATION	32'-2"	24590-WTP-MV-M59T-00016003 DET 26, SEE NOTE 9	N/A
N44A	1"	160S	BALANCE	32'-7"	24590-WTP-MV-M59T-00016003 DET 26, SEE NOTE 9	1"-40S
N44B	1"	160S	DENSITY	32'-8"	24590-WTP-MV-M59T-00016003 DET 26, SEE NOTE 9	1"-40S
N44C	1"	160S	LEVEL	32'-9"	24590-WTP-MV-M59T-00016003 DET 26, SEE NOTE 9	1"-40S
N45	4"	80S	INLET	31'-3"	24590-WTP-MV-M59T-00016001 DET 2	4"-40S
N46	3"	80S	INLET WITH DIP PIPE	31'-3"	24590-WTP-MV-M59T-00016001 DET 4	3"-40S
N47	2"	160S	INLET	31'-11"	24590-WTP-MV-M59T-00016001 DET 2	2"-40S
N48	2"	160S	SPARE	31'-11"	24590-WTP-MV-M59T-00016001 DET 2	CAPPED
N49	6"	80S	SPARE	24'-10"	24590-WTP-MV-M59T-00016001 DET 3	CAPPED
N50	8"	80S	VESSEL VENT	32'-2"	24590-WTP-MV-M59T-00016001 DET 1	8"-10S
N51			NOT USED			
N52	2"	160S	SPARE	31'-9"	24590-WTP-MV-M59T-00016001 DET 2	CAPPED
N53	2" OD x 1"	160S	TEMPERATURE	32'-0"	24590-WTP-MV-M59T-00007, ASSY 1, DET 1	3/4"-10S
N54	24"	PLATE 3/8" THK	MANWAY	30'-10"	24590-WTP-MV-M59T-00017 DET 1	CAPPED
N55	6"	80S	INLET WITH DIP PIPE	29'-10"	24590-WTP-MV-M59T-00016001 DET 4	6"-10S
N56	6"	80S	INLET WITH DIP PIPE	29'-10"	24590-WTP-MV-M59T-00016001 DET 4	6"-10S
N57	3"	80S	INLET	31'-9"	24590-WTP-MV-M59T-00016001 DET 2	3"-40S
N58	4"	80S	SPARE	31'-3"	24590-WTP-MV-M59T-00016001 DET 2	CAPPED
N59			NOT USED			
N60			NOT USED			
N61	2" OD x 1/2"	160S	FORCED AIR PURGE	31'-3"	25490-WTP-M59T-00016001 DET 5	1/2"-40S

HOLD 1

GENERAL NOTES:

1. RFD PUMP SHALL BE PROVIDED BY BUYER FOR SELLER TO INSTALL. ALL OTHER INTERNALS SHALL BE DESIGNED, PROVIDED AND INSTALLED BY SELLER.
2. FOR DIP LEGS USE 2" BOTTOM HEAD CLEARANCE, UNLESS SHOWN OTHERWISE.
3. "Z" DIMENSION MEASURED FROM BOTTOM T.L. TO C.L. OF NOZZLE OR FACE OF NOZZLE.
4. RING BEAM TO BE SHIPPED AHEAD OF VESSEL TO FIELD CONSTRUCTION FOR INSTALLATION BY OTHERS.
5. ADDED PJM AIR/VAC INLET PIPES WITH HELICAL COILS, INTERNAL SUPPORTS AND BRACINGS.
6. CONTENTS OF THIS DOCUMENT ARE DANGEROUS WASTE PERMIT AFFECTING.
7. THIS DRAWING IN PART SUPERSEDES 24590-PTF-MV-PWD-00010, REV 1, AND INCLUDES INFORMATION FROM THE FOLLOWING CHANGE DOCUMENTS:

    24590-PTF-MVLN-PWD-00001
    24590-PTF-MVN-PWD-00008
    24590-PTF-MVN-PWD-00019
    24590-PTF-MVN-PWD-00026
    24590-PTF-MVN-PWD-00028
    24590-PTF-MVN-PWD-00031
    24590-PTF-MVN-M59T-00026
    24590-WTP-M6N-M80T-00002
    24590-WTP-M6N-M80T-00003
    24590-WTP-SDDR-MS-07-00050

8. PER 24590-WTP-MV-M59T-00016001, DETAIL 4, BUT ADD A 1/4" Ø SIPHON-BREAK HOLE NEAR TOP OF DIP LEG.
9. PER 24590-WTP-MV-M59T-00016003, DETAIL 26, BUT SUPPORTED AS INDICATED ON 24590-PTF-MV-PWD-00010003.

HOLD:

1. NOZZLES N40 AND N41 ARE ON HOLD FOR NOZZLE SCHEDULE, POSSIBLE INTEGRAL REINFORCEMEMT, DIP LEGS AND DIP LEG SUPPORTS. LOCATION OF NOZZLES ON TOP HEAD MAY BE MARKED, AND THE NORMINAL SIZE HOLE CUT.

THIS DRAWING TO BE READ IN CONJUNCTION WITH MECHANICAL SYSTEMS DATA SHEET 24590-PTF-MVD-PWD-00002

PLEASE NOTE THAT SOURCE, SPECIAL NUCLEAR AND BYPRODUCT MATERIALS, AS DEFINED IN THE ATOMIC ENERGY ACT OF 1954 (AEA), ARE REGULATED AT THE U.S. DEPARTMENT OF ENERGY (DOE) FACILITIES EXCLUSIVELY BY DOE ACTING PURSUANT TO ITS AEA AUTHORITY. DOE ASSERTS, THAT PURSUANT TO THE AEA, IT HAS SOLE AND EXCLUSIVE RESPONSIBILITY AND AUTHORITY TO REGULATE SOURCE, SPECIAL NUCLEAR, AND BYPRODUCT MATERIALS AT DOE-OWNED NUCLEAR FACILITIES. INFORMATION CONTAINED HEREIN ON RADIONUCLIDES IS PROVIDED FOR PROCESS DESCRIPTION PURPOSES ONLY.

DRAWINGS INDEX		
DWG NO	REV	TITLE
24590-PTF-MV-PWD-00010001	0	EQUIPMENT ASSEMBLY PLANT WASH VESSEL PWD-VSL-00044 SHEET 1 OF 3
24590-PTF-MV-PWD-00010002	0	SECTIONS & DETAILS PLANT WASH VESSEL PWD-VSL-00044 SHEET 2 OF 3
24590-PTF-MV-PWD-00010003	0	DETAILS PLANT WASH VESSEL PWD-VSL-00044 SHEET 3 OF 3

REFERENCE DRAWINGS	
DWG NO	TITLE
24590-WTP-MV-M59T-00001	PRESSURE VESSEL TOLERANCES STANDARD DETAILS
24590-WTP-MV-M59T-00004	PULSE JET MIXERS STANDARD DETAILS
24590-WTP-MV-M59T-00007	THERMOWELL CONNECTION STANDARD DETAILS
24590-WTP-MV-M59T-00011	WASH RINGS STANDARD DETAILS
24590-WTP-MV-M59T-00012	GROUNDING LUG STANDARD DETAILS
24590-WTP-MV-M59T-00013	CHARGE VESSELS STANDARD DETAILS
24590-WTP-MV-M59T-00014	RFD PUMPS DETAILS
24590-WTP-MV-M59T-00016001	VESSEL CONNECTIONS STANDARD DETAILS SHT 1 OF 3
24590-WTP-MV-M59T-00016003	VESSEL CONNECTIONS STANDARD DETAILS SHT 3 OF 3
24590-WTP-MV-M59T-00017	VESSEL INSPECTION MANWAY STANDARD DETAILS
24590-PTF-M6-PWD-00002001	P&ID - PTF PLANT WASH & DISPOSAL SYSTEM EFFLUENT COLLECTION PWD-VSL-00044
24590-PTF-M6-PWD-00000046	P&ID - PTF PLANT WASH & DISPOSAL UTILITY SERVICES PLANT WASH RACK
24590-PTF-M6-UFP-00007007	P&ID - PTF ULTRAFILTRATION PROCESS SYSTEM - VESSEL PJM UFP-VSL-00001 A/B PWD-VSL-00044
24590-PTF-M6-UFP-00008007	P&ID - PTF ULTRAFILTRATION PROCESS SYSTEM VESSEL PJM UFP-VSL-00001A/B PWD-VSL-00044
24590-PTF-M6-UFP-00009006	P&ID PTF ULTRAFILTRATION PROCESS SYSTEM VESSEL RFD UFP-VSL-00062C/PWD-VSL-00044
24590-PTF-M6-UFP-00011005	P&ID - PTF ULTRAFILTRATION PROCESS SYSTEM VESSEL PJM/RFD UFP-VSL-00062C/PWD-VSL-00044

REVISION HISTORY						
REV	DESCRIPTION	ORG	CHKD	RVWD	APVD	DATE
0	ISSUED FOR PURCHSE PER NOTE 7					5/25/10

Q

ISSUED BY RPP-WTP PDC

PROJECT No.	24590
SITE	HANFORD
AREA	200E
BUILDING No.	10

	BY	DATE
ORIGINATOR		25-May-10
CHECKER		5/25/10
APPROVER		5/25/10
REVIEWER		5/25/10

CONTENT APPLICABLE TO ALARA? ☒ YES ☐ NO
ADR NO. 24590-WTP-ACR-M-03-008 REV. 2
E&NS SCREENING REQUIRED ☒ YES ☐ NO E&NS INITIAL IF YES

BECHTEL

RIVER PROTECTION PROJECT
WASTE TREATMENT PLANT
2435 STEVENS CENTER PLACE
RICHLAND, WA 99354

CONTRACT No: DE-AC27-01RV14136

EQUIPMENT ASSEMBLY
PLANT WASH VESSEL
PWD-VSL-00044
SHEET 1 OF 3

SCALE: NONE | 24590-PTF-MV-PWD-00010001 | REV 0

'E' SIZE 44x34

05/21/2010 7:06:31 AM

Quarter Ending 09/30/11 24590-PTF-PCN-ENV-10-032

Hanford Facility RCRA Permit Modification Notification Form
Part III, Operating Unit 10
Waste Treatment and Immobilization Plant

Index

Page 2 of 4: Hanford Facility RCRA Permit, Part III, Operating Unit 10, Waste Treatment and Immobilization Plant
Replace equipment assembly drawings for the PTF HLW Lag Storage Vessels (HLP-VSL-00027A and HLP-VSL-00027B) in Appendix 8.6 of the Dangerous Waste Permit (DWP).

Submitted by Co-Operator:

D. M. Busche — Date 6/7/11

Reviewed by ORP Program Office:

D. L. Noyes — Date 6/8/11

Quarter Ending 09/30/11

24590-PTF-PCN-ENV-10-032

Hanford Facility RCRA Permit Modification Notification Form	
Unit: **Waste Treatment and Immobilization Plant**	Permit Part: **Part III, Operating Unit 10**

Description of Modification:

The purpose of this Class 1 prime modification is to update the equipment assembly drawings for the PTF HLW Lag Storage Vessels (HLP-VSL-00027A and HLP-VSL-00027B) in Appendix 8.6 of the DWP. The mechanical data sheets associated with these vessels are located in 24590-PTF-PCN-ENV-08-006.

The following equipment assembly drawings are being submitted to replace the documents currently in Appendix 8.6.

Appendix 8.6			
Replace:	24590-PTF-MV-HLP-00005, Rev. 2	With:	24590-PTF-MV-HLP-00005, Rev. 3
	24590-PTF-MV-HLP-00006, Rev. 2		24590-PTF-MV-HLP-00006, Rev. 3
	24590-PTF-MV-HLP-00009, Rev. 0		24590-PTF-MV-HLP-00009, Rev. 1
	24590-PTF-MV-HLP-00010, Rev. 0		24590-PTF-MV-HLP-00010, Rev. 1
	24590-PTF-MV-HLP-00011, Rev. 0		24590-PTF-MV-HLP-00011, Rev. 1

This modification requests Ecology approval and incorporation into the permit the specific changes to the above DWP documents. Revisions are the result of ongoing design (changes from vendor preliminary data to vendor detailed design), seismic and mixing analyses, and general criteria from design verification review. The following identifies the significant changes that have been incorporated:

Equipment Assembly Drawing (24590-PTF-MV-HLP-00005, Rev. 3)

- Added and deleted nozzles
- Added Section L-L and deleted Section F-F
- Revised the dimensions of several nozzles and connecting pipes as indicated on the nozzle table
- Added, deleted and modified notes and references
- Deleted vessel component quality level chart
- Added reference drawing numbers on plan view

Equipment Assembly Drawing (24590-PTF-MV-HLP-00006, Rev. 3)

- Added and deleted nozzles
- Added Section L-L and deleted Section F-F
- Revised the dimensions of several nozzles and connecting pipes as indicated on the nozzle table
- Added, deleted and modified notes and references
- Deleted vessel component quality level chart
- Added reference drawing numbers on plan view

Equipment Assembly Drawing (24590-PTF-MV-HLP-00009, Rev. 1)

- Added detail 15 illustrating required skirt access
- Added dimension and note on skirt vent
- Added bottom surface of pulse jet mixer and tangent line reference dimension
- Added reference drawing number to Section A-A
- Added reference drawing table
- Revised pulse jet mixer nozzles on Sections A-A and C-C
- Reduced the size of nozzle N34 from 10-inches to 3-inches and extended the nozzle dip pipe to just below the vessel overflow level on Section A-A

- Revised "Z" dimension for nozzle N36 on Section A-A from 16-feet 2 3/4-inches to 5-feet 5-inches
- Deleted internal 10-inch and 8-inch piping, recirculation nozzles, split elbow, vacuum breaker and associated leaders on Section A-A
- Deleted 10-inch and 8-inch piping, split elbow and associated dimensioning on Section B-B
- Added and deleted nozzles
- Added, deleted and modified notes and references
- Revised the external shell-side water jacket size from two 7-feet 11-inches sections to two 2-feet 2-inches sections
- Revised 4-inch Schedule 80S piping associated with external shell-side water jacket

Equipment Assembly Drawing (24590-PTF-MV-HLP-00010, Rev. 1)

- Added detail 15 illustrating required skirt access
- Added dimension and note on skirt vent
- Added reference drawing table
- Added reference drawing number to Section A-A
- Revised pulse jet mixer nozzles on Sections A-A and C-C
- Added and deleted nozzles
- Deleted internal 8-inch piping, recirculation nozzles, and associated leaders on Section A-A
- Deleted 10-inch and 8-inch piping and split elbow on Section B-B
- Reduced size of nozzle N38 from 10-inches to 3-inches on Section B-B
- Deleted recirculation nozzles, associated leaders and dimensioning on Section C-C
- Revised Section A-A external shell side water jacket size from two 7-feet 11-inches length sections to two 2-feet 2-inches length sections
- Revised Section A-A "Z" dimension for nozzle N40 from 16-feet 2 3/4-inches to 5-feet 5-inches
- Revised 4-inch Schedule 80S piping associated with external shell-side water jacket
- Added, deleted and modified notes and references

Equipment Assembly Drawing (24590-PTF-MV-HLP-00011, Rev. 1)

- Added Section L-L
- Revised reference dimensions on Sections G-G and J-J
- Revised reference dimension on Detail 6
- Revised Details 3, 5, 10 and 11
- Added Details 12 and 13
- Deleted Details 4, 7, 8 and deleted Section F-F
- Deleted 8-inch ID dimension from Sections G-G and J-J
- Added, deleted and modified notes and references
- Revised Section D-D external shell side water jacket size from two 7-feet 11-inches length sections to two 2-feet 2-inches length sections
- Revised Section D-D "Z" dimension for jacket outlet nozzle N36 from 16-feet 2 3/4-inches to 5-feet 5-inches
- Revised Section D-D 4-inch schedule 80S pipe interconnect
- Revised Section E-E external shell side water jacket size from two 7-feet 11-inches length sections to two 2-feet 2-inch length sections
- Revised Section E-E pump outlet nozzle "Z" dimension from 11 1/2-inches to 3-feet 1/2-inch
- Revised Section E-E pump outlet nozzle "center of inside crown" dimension from 5-feet 2 3/8-inches to 7-feet 3 7/8-inches
- Revised Detail 3 to illustrate pump outlet nozzle penetrating vessel shell between two 2-feet 2-inch water jackets

Quarter Ending 09/30/11 24590-PTF-PCN-ENV-10-032

The following is a list of outstanding change documents that have not been incorporated into this modification:

24590-PTF-MV-HLP-00011

24590-QL-MRB-MVA0-00001-T0008

WAC 173-303-830 Modification Class:	Class 1	Class [1]1	Class 2	Class 3
Please mark the Modification Class:		X		

Enter relevant WAC 173-303-830, Appendix I Modification citation number: NA

Enter wording of WAC 173-303-830, Appendix I Modification citation:

In accordance with WAC 173-303-830(4)(d)(i), this modification notification is requested to be reviewed and approved as a Class [1]1 modification. WAC 173-303-830(4)(d)(ii)(A) states, "Class 1 modifications apply to minor changes that keep the permit current with routine changes to the facility or its operation. These changes do not substantially alter the permit conditions or reduce the capacity of the facility to protect human health or the environment. In the case of Class 1 modifications, the director may require prior approval."

Modification Approved/Concur: ☑ Yes ☐ Denied (state reason below)

Reason for denial:

Reviewed by Ecology:

for

J. J. Wallace

8-10-11

Date

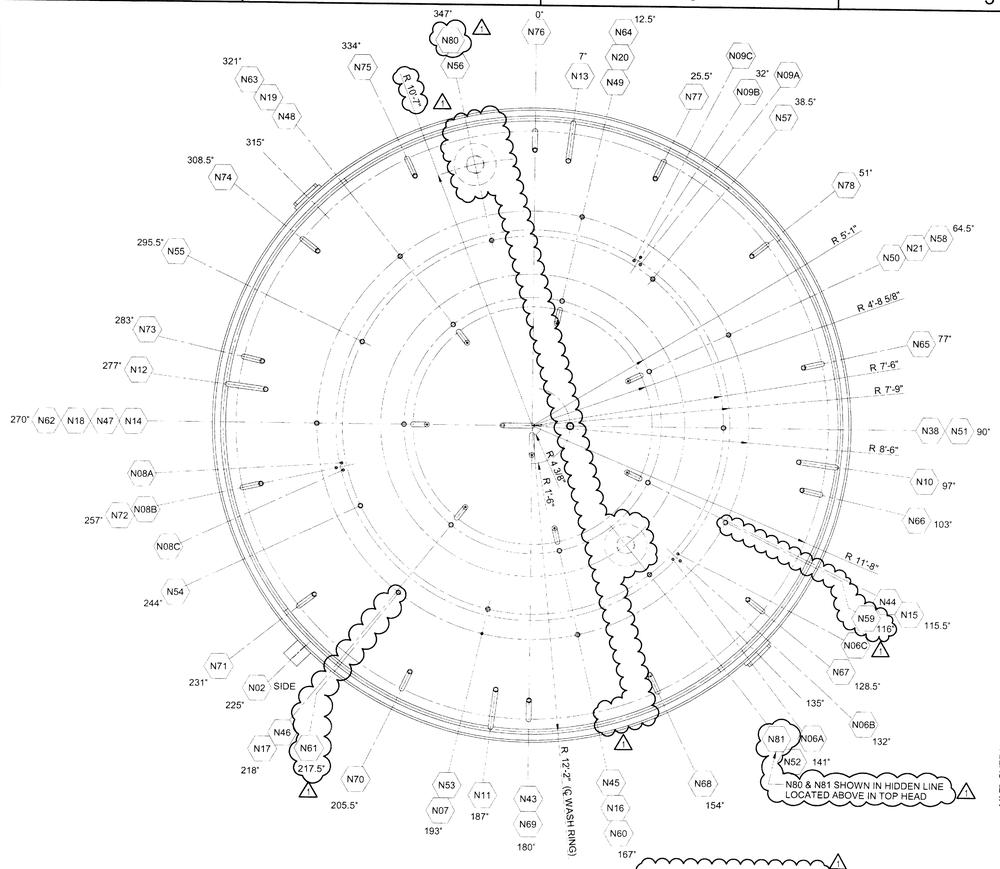

SECTION B-B

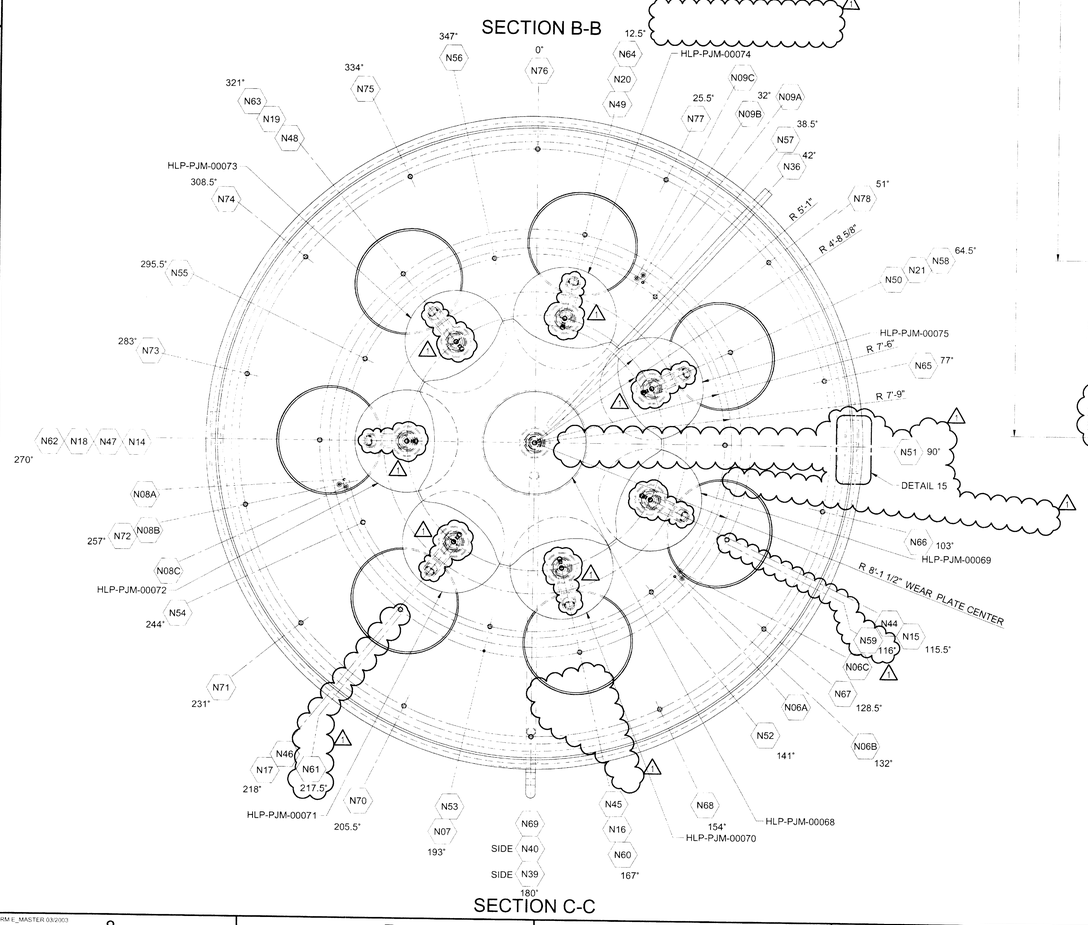

SECTION C-C

GENERAL NOTES:

1. SEE 24590-PTF-MV-HLP-00005 FOR GENERAL NOTES
2. CONTENT'S OF THIS DOCUMENT ARE DANGEROUS WASTE PERMIT AFFECTING.
3. REVISED/ADDED/DELETED:
   a) INCORPORATED THE FOLLOWING DOCUMENTS:
      24590-PTF-MVN-HLP-00014,
      24590-PTF-MVN-HLP-00022,
      24590-PTF-MVN-HLP-00030.
   b) ADDED DETAIL 15
   c) ADDED DIMENSION AND NOTE ON SKIRT VENT.
   d) ADDED REFERENCE DRAWING TABLE
   e) ADDED REFERENCE DRAWING NUMBER TO SECTION A-A .
   f) REVISED PJM NOZZLES ON SECTIONS A-A & C-C.
   g) ADDED NOZZLES N80 AND N81 TO SECTION A-A
   h) ADDED NOZZLES N80 AND N81 WITH HIDDEN LINES ON SECTION B-B.
   i) ADDED DIMENSION AND NOTE TO RING BEAM ON SECTION A-A.

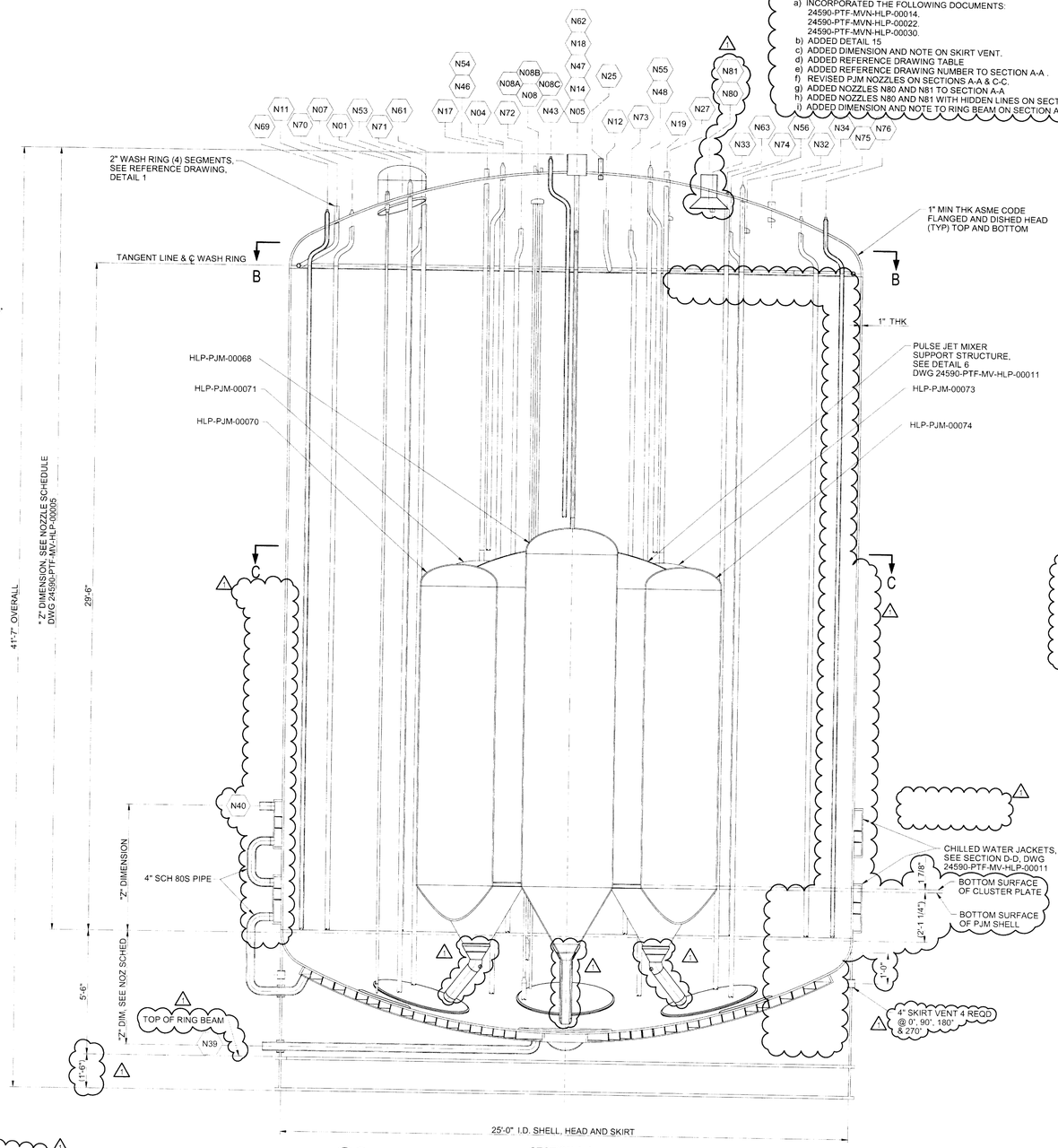

SECTION A-A
24590-PTF-MV-HLP-00005
(SEE PLAN VIEW FOR CORRECT NOZZLE NUMBERS & ORIENTATION

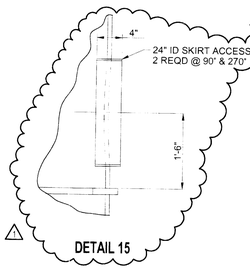

DETAIL 15

PLEASE NOTE THAT SOURCE, SPECIAL NUCLEAR AND BYPRODUCT MATERIALS, AS DEFINED IN THE ATOMIC ENERGY ACT OF 1954 (AEA) ARE REGULATED AT THE U.S. DEPARTMENT OF ENERGY (DOE) FACILITIES EXCLUSIVELY BY DOE ACTING PURSUANT TO ITS AEA AUTHORITY. DOE ASSERTS, THAT PURSUANT TO THE AEA, IT HAS SOLE AND EXCLUSIVE RESPONSIBILITY AND AUTHORITY TO REGULATE SOURCE, SPECIAL NUCLEAR, AND BYPRODUCT MATERIALS AT DOE-OWNED NUCLEAR FACILITIES. INFORMATION CONTAINED HEREIN ON RADIONUCLIDES IS PROVIDED FOR PROCESS DESCRIPTION PURPOSES ONLY.

Please note that source, special nuclear, and byproduct materials, as defined in the Atomic Energy Act of 1954 (AEA) are regulated at the U.S. Department of Energy (DOE) facilities exclusively by DOE acting pursuant to its AEA authority. DOE asserts, that pursuant to AEA, it has sole and exclusive responsibility and authority to regulate source, special nuclear, and byproduct materials at DOE owned nuclear facilities. Information contained herein on radionuclides is provided for process description purposes only.

REFERENCE DRAWINGS	
DWG NO	TITLE
24590-PTF-MV-HLP-00005	EQUIPMENT ASSEMBLY HLW LAG STORAGE VESSEL HLP-VSL-00027B
24590-PTF-MV-HLP-00011	SECTION AND DETAILS HLW LAG STORAGE VESSEL HLP-VSL-00027A & B

REV	DESCRIPTION	ORG	CHKD	RVWD	APVD	DATE
1	REVISED PER NOTE 3	RDS/RJR	YHVCS	MJ	MH	2/24/11
0	ISSUED FOR PURCHASE	RDS/RJR	YHVCS	MJ	MH	4/29/04

REVISION HISTORY

Q QUALITY LEVEL

ISSUED FOR BUILDING PERMIT — ISSUE STAMP

PROJECT No	24590	
SITE	HANFORD	
AREA	200E	
BUILDING No	10	

	BY	DATE
ORIGINATOR	R. SIMMONS/R. RIDER	4/23/04
CHECKER	C. SLATER/Y. HOVANSKI	4/23/04
APPROVER	M. HOFFMANN	4/29/04
REVIEWER	J. JULYK	4/29/04

CONTENT APPLICABLE TO ALARA? [X] YES [ ] NO
ADR NO. 24590-WTP-ADR-M-03-008 REV 2
E&NS SCREENING REQUIRED [X] YES [ ] NO E&NS INITIAL IF YES

BECHTEL

RIVER PROTECTION PROJECT
WASTE TREATMENT PLANT
2435 STEVENS CENTER PLACE
RICHLAND, WA 99354

CONTRACT No DE-AC27-01RV14136

EQUIPMENT ASSEMBLY HLW LAG STORAGE VESSEL HLP-VSL-00027B

SCALE: NONE

24590-PTF-MV-HLP-00010

REV 1

SCREENING IS REQUIRED FOR DRAWING TYPES DELETED IN 24590-WTP-GPP-ENG-000

E SIZE - 44x34

COMPUTER GENERATED MANUAL DESIGN CHANGES NOT PERMITTED

02/22/2011 02:40 PM

FORM E_MASTER 03/2003

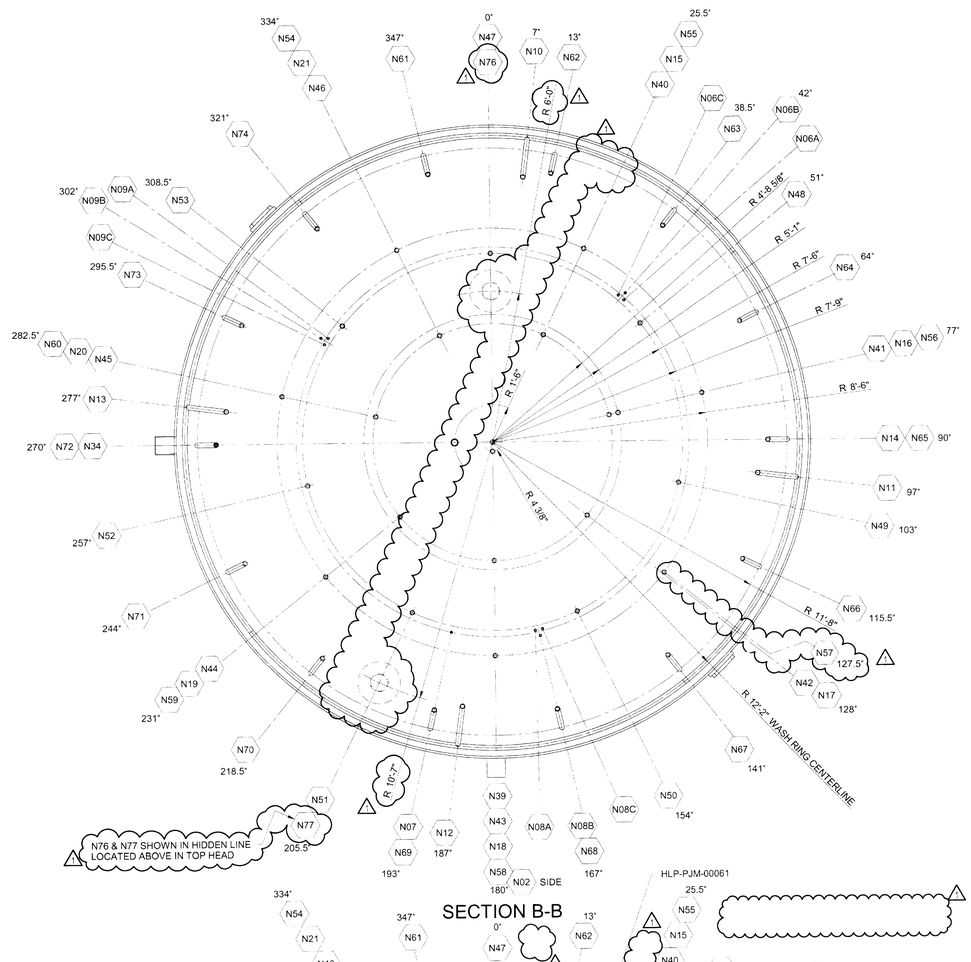

SECTION B-B

SECTION C-C

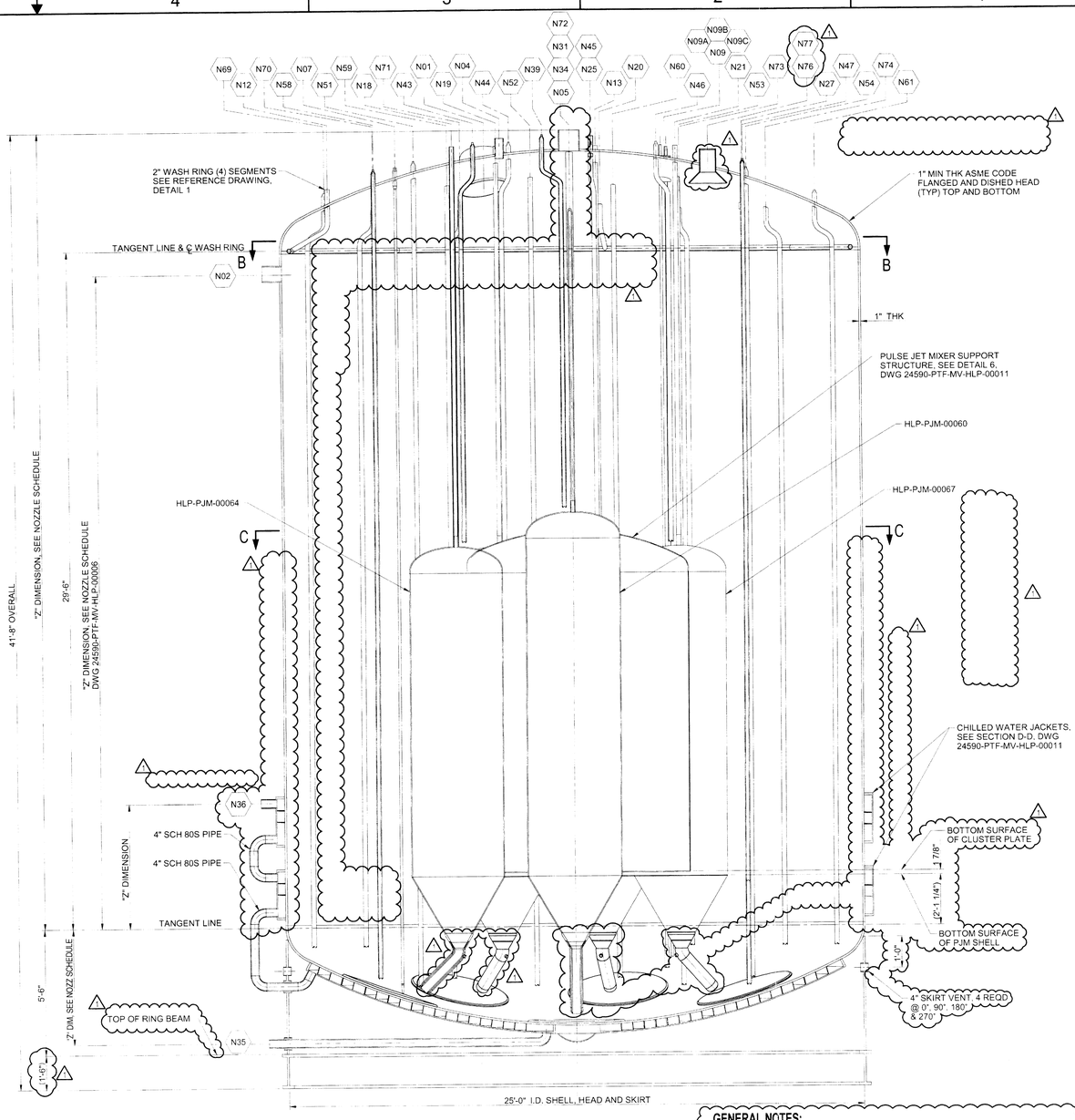

SECTION A-A
24590-PTF-MV-HLP-00006
(SEE PLAN VIEW FOR CORRECT NOZZLE NUMBERS & ORIENTATION)

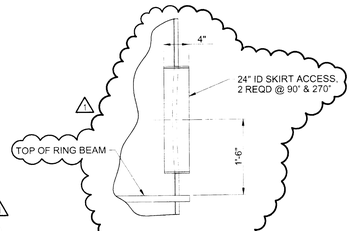

DETAIL 15

GENERAL NOTES:

1. SEE 24590-PTF-MV-HLP-00006 FOR GENERAL NOTES.
2. CONTENTS OF THIS DOCUMENT ARE DANGEROUS WASTE PERMIT AFFECTING.
3. REVISED/ADDED/DELETED:
   a) INCORPORATED THE FOLLOWING DOCUMENTS:
      24590-PTF-MVN-HLP-00013.
      24590-PTF-MVN-HLP-00021.
      24590-PTF-MVN-HLP-00027.
      24590-WTP-M6N-M80T-00002 (INCORPORATED ON 24590-PTF-MV-HLP-00006)
   b) DELETED BOTTOM OF SUPPORT STRUCTURE TANGENT LINE REFERENCE DIMENSION.
   c) ADDED DETAIL 15
   d) ADDED DIMENSION AND NOTE ON SKIRT VENT.
   e) ADDED BOTTOM SURFACE OF PJM AND TANGENT LINE REFERENCE DIMENSION.
   f) ADDED REFERENCE DRAWING NUMBER TO SECTION A-A
   g) ADD REFERENCE DRAWING TABLE.
   h) REVISED PJM NOZZLES ON SECTIONS A-A & C-C.
   i) INCORPORATED 24590-WTP-M6N-M80T-00002 WHICH IS NO LONGER REQUIRED PER 24590-WTP-RPT-ENS-07-001, REV 23 AS LEAD DOCUMENT REPORT IS CANCELLED.
   j) ADDED NOZZLES N76 AND N77 TO SECTION A-A.
   k) ADDED N76 & N77 WITH HIDDEN LINES TO SECTION B-B.
   l) ADDED DIMENSION AND NOTE TO RING BEAM ON SECTION A-A.

REFERENCE DRAWINGS

DWG NO	TITLE
24590-PTF-MV-HLP-00006	EQUIPMENT ASSEMBLY HLW LAG STORAGE VESSEL HLP-VSL-00027A
24590-PTF-MV-HLP-00011	SECTIONS AND DETAILS HLW LAG STORAGE VESSEL HLP-VSL-00027A & B

Please note that source, special nuclear, and byproduct materials, as defined in the Atomic Energy Act of 1954 (AEA) are regulated at the U. S. Department of Energy (DOE) facilities exclusively by DOE acting pursuant to the AEA. DOE asserts that pursuant to AEA, it has sole and exclusive responsibility and authority to regulate source, special nuclear, and byproduct materials at DOE-owned nuclear facilities. Information contained herein on radionuclides is provided for process description purposes only.

REV	DESCRIPTION	ORG	CHKD	RVWD	APVD	DATE
1	REVISED PER NOTE 3	RDS/RJR	YHCS	JJ	MH	2/24/11
0	ISSUED FOR PURCHASE	RDS/RJR	YHCS	JJ	MH	4/29/04

REVISION HISTORY

Q QUALITY LEVEL

ISSUED BY: RPP-WTP DOE

ISSUE STAMP

PROJECT No	24590	
SITE	HANFORD	
AREA	200E	
BUILDING No	10	
	BY	DATE
ORIGINATOR	R. SIMMONS/R. RIDER	4/29/04
CHECKER	C. SLATER/Y HOVANSKI	4/29/04
APPROVER	M. HOFFMANN	4/29/04
REVIEWER	J. JULYK	4/29/04

CONTENT APPLICABLE TO ALARA? [X] YES [ ] NO

ADR NO. 24590-WTP-ADR-M-03-008 REV: 2

ENS SCREENING REQUIRED [X] YES [ ] NO ENS INITIAL IF YES

PLEASE NOTE THAT SOURCE, SPECIAL NUCLEAR AND BYPRODUCT MATERIALS, AS DEFINED IN THE ATOMIC ENERGY ACT OF 1954 (AEA) ARE REGULATED AT THE U.S. DEPARTMENT OF ENERGY (DOE) FACILITIES EXCLUSIVELY BY DOE ACTING PURSUANT TO ITS AEA AUTHORITY. DOE ASSERTS, THAT PURSUANT TO THE AEA, IT HAS SOLE AND EXCLUSIVE RESPONSIBILITY AND AUTHORITY TO REGULATE SOURCE, SPECIAL NUCLEAR, AND BYPRODUCT MATERIALS AT DOE-OWNED NUCLEAR FACILITIES. INFORMATION CONTAINED HEREIN ON RADIONUCLIDES IS PROVIDED FOR PROCESS DESCRIPTION PURPOSES ONLY.

BECHTEL

RIVER PROTECTION PROJECT
WASTE TREATMENT PLANT
2435 STEVENS CENTER PLACE
RICHLAND, WA 99354

CONTRACT No: DE-AC27-01RV14136

EQUIPMENT ASSEMBLY HLW LAG STORAGE VESSEL HLP-VSL-00027A

SCALE: NONE

24590-PTF-MV-HLP-00009

REV 1

"E" SIZE - 44x34

SCREENING IS REQUIRED FOR DRAWING TYPES IDENTIFIED IN 24590-WTP-GPP-SHDG-000

COMPUTER GENERATED MANUAL DESIGN CHANGES NOT PERMITTED

02/24/2011 10:54 AM

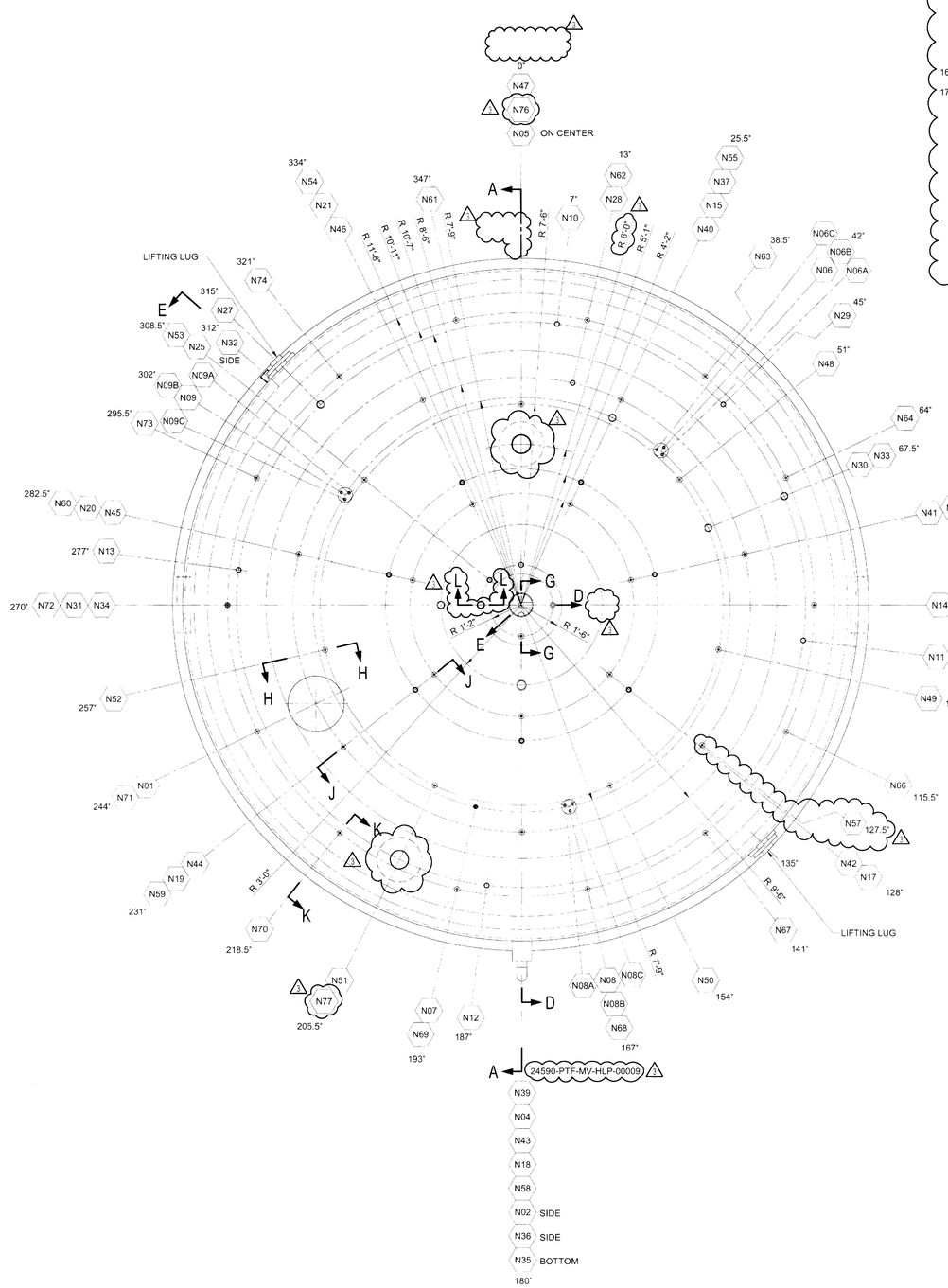

PLAN VIEW

SECTIONS D-D THRU M-M, SEE 24590-PTF-MV-HLP-00011

GENERAL NOTES:

9. PREPARE NOZZLE CONNECTIONS PER 24590-WTP-PW-P30T-00001.

10. DELETED

11. NOZZLES ARE READ FROM THE CENTER OF VESSEL TO OUTWARD.

12. ALL WELDS OF THE PULSE JET MIXER CLUSTER SHALL BE FULL PENETRATION, ULTRASONICALLY TESTED AND DYE-PENETRANT TESTED AS A MINIMUM.
ALL FULL PENETRATION WELDS OF SUPPORT MEMBERS SHALL BE ULTRASONICALLY TESTED AND DYE PENETRANT TESTED. IF FILLET WELDS ARE PERMITTED BY THE BUYER AND ARE NOT READILY ULTRASONICALLY TESTED, THEY MAY BE DYE-PENETRANT TESTED WITH APPROVAL FROM THE BUYER.

13. THE PULSE JET MIXER CLUSTER SHALL BE DESIGNED FOR THE EXTERNAL PRESSURE OF THE PARENT VESSEL STATIC HEAD. THE PJM CLUSTER FILL SHALL NOT BE CONSIDERED AS SUPPORT FOR EXTERNAL PRESSURE.

14. DELETED

15. PJM STELLITE CONE TECH NOTES:
a) STELLITE LINER SHALL BE ENCASED WITH A STAINLESS STEEL SHROUD (SAME MATERIAL AS PJM'S) WITH A GAP LARGE ENOUGH TO FILL WITH CERAMIC GROUT (AREMCO CERAMACAST 646-N ZIRCONIUM OXIDE OR EQUAL).
b) NO SHARP CORNERS ARE ALLOWED. ALL INTERIOR AND EXTERIOR EDGES SHALL BE PROVIDED WITH A RADIUS.
c) STELLITE SHALL PROJECT 1/4" (+,- 1/16") PAST THE STAINLESS STEEL SHROUD.
d) NO WELDING TO THE STELLITE MATERIAL IS ALLOWED.
e) ALL WELDS TO STAINLESS STEEL SHROUD REQUIRE VOLUMETRIC EXAMINATION.
f) AFTER ASSEMBLY AND GROUTING OF THE PJM STELLITE CONE ASSEMBLIES WITH STAINLESS STEEL SHROUD IS COMPLETE, 100% RADIOGRAPHY OF ONE COMPLETED PJM ASSEMBLY PER VESSEL IS REQUIRED PER ASME SECTION V ARTICLE 2 FOR VALIDATING GROUT POUR CONSISTENCY. ONLY THE STRAIGHT PORTIONS OF THE ASSEMBLY SHALL MEET THE REQUIREMENTS OF ARTICLE 2. DUE TO GEOMETRY THE AREA ADJACENT TO THE GROUT FILL FITTINGS, ELBOWS, AND CONE WILL BE CONSIDERED INFORMATIONAL AND ARE EXEMPT FROM MEETING THE REQUIREMENTS OF T-270 AND T-280 OF ASME SECTION V ARTICLE 2.

16. CONTENTS OF THIS DOCUMENT ARE DANGEROUS WASTE PERMIT AFFECTING.

17. REVISED/ADDED/DELETED:
a) INCORPORATED THE FOLLOWING DOCUMENTS:
24590-PTF-MVN-HLP-00012
24590-PTF-MVN-HLP-00020
24590-PTF-MVN-HLP-00026 EXCEPT 14 AND 15 IN DESCRIPTION OF CHANGE LIST PER P & ID
24590-PTF-MVN-HLP-00045, INCORPORATION MODIFIED PER RESPONSIBILE ENGINEER
24590-PTF-MVN-HLP-00048, INCORPORATION MODIFIED AND IS NO LONGER REQUIRED PER RESPONSIBILE ENGINEER
24590-WTP-M6N-M80T-00003
24590-QL-MRB-MVA0-00001-T0006
24590-QL-MRB-MVA0-00001-T0007
b) DELETED SECTION F-F
c) ADDED SECTION L-L
d) REVISED REFERENCE DRAWINGS LIST AND REMOVED REV COLUMN.
e) REMOVED VESSEL COMPONENT QUALITY LEVELS CHART.
f) ADDED REFERENCE DRAWING NUMBER ON PLAN VIEW.
g) ADDED RADIAL DIMENSION FOR N77 NOZZLE ON PLAN VIEW.
h) DELETED NOTES 10 AND 14.

NOZZLE	SIZE	SCHED/WALL	SERVICE/REMARKS	"Z" DIM	REF DWG-DET	CONN. PIPE/TUBE SIZE
N01	24"ID	0.5"	MANWAY	33'-4"	24590-WTP-MV-M59T-00017 DET 1	CAPPED
N02	8"	80S	OVERFLOW	28'-6"	24590-WTP-MV-M59T-00016001 DET 1	8"-40S
N04	4"	80S	SPARE	34'-6"	24590-WTP-MV-M59T-00016001 DET 2	CAPPED 80S
N05	10"	80S	VENT	34'-8"	24590-WTP-MV-M59T-00016001 DET 1	10"-10S
N06	6"	80S	INSTRUMENTATION	33'-6"	24590-PTF-MV-HLP-00011 DET 14	N/A
N06A	1"	160S	BALANCE	SEE DET	24590-PTF-MV-HLP-00011 DET 14	1"-40S
N06B	1"	160S	DENSITY	SEE DET	24590-PTF-MV-HLP-00011 DET 14	1"-40S
N06C	1"	160S	LEVEL	33'-11"	24590-PTF-MV-HLP-00011 DET 14	1"-40S
N07	2" OD X 1"	160S	TEMPERATURE	33'-3"	24590-WTP-MV-M59T-00007 DET 1	3/4"-10S
N08	6"	80S	INSTRUMENTATION	33'-6"	24590-PTF-MV-HLP-00011 DET 14	N/A
N08A	1"	160S	BALANCE	SEE DET	24590-PTF-MV-HLP-00011 DET 14	1"-40S
N08B	1"	160S	DENSITY	SEE DET	24590-PTF-MV-HLP-00011 DET 14	1"-40S
N08C	1"	160S	LEVEL	33'-11"	24590-PTF-MV-HLP-00011 DET 14	1"-40S
N09	6"	80S	INSTRUMENTATION	33'-6"	24590-PTF-MV-HLP-00011 DET 14	N/A
N09A	1"	160S	BALANCE	SEE DET	24590-PTF-MV-HLP-00011 DET 14	1"-40S
N09B	1"	160S	DENSITY	SEE DET	24590-PTF-MV-HLP-00011 DET 14	1"-40S
N09C	1"	160S	LEVEL	33'-11"	24590-PTF-MV-HLP-00011 DET 14	1"-40S
N10	2"	160S	INLET TO WASH RING	32'-2"	24590-WTP-MV-M59T-00016001 DET 3	2"-40S
N11	2"	160S	INLET TO WASH RING	32'-2"	24590-WTP-MV-M59T-00016001 DET 3	2"-40S
N12	2"	160S	INLET TO WASH RING	32'-2"	24590-WTP-MV-M59T-00016001 DET 3	2"-40S
N13	2"	160S	INLET TO WASH RING	32'-2"	24590-WTP-MV-M59T-00016001 DET 3	2"-40S
N14	2"	160S	AIR/VACUUM TO HLP-PJM-00060	34'-6"	24590-WTP-MV-M59T-00016001 DET 3	2"-40S
N15	2"	160S	AIR/VACUUM TO HLP-PJM-00061	33'-11"	24590-WTP-MV-M59T-00016001 DET 3	2"-40S
N16	2"	160S	AIR/VACUUM TO HLP-PJM-00062	33'-11"	24590-WTP-MV-M59T-00016001 DET 3	2"-40S
N17	2"	160S	AIR/VACUUM TO HLP-PJM-00063	33'-11"	24590-WTP-MV-M59T-00016001 DET 3	2"-40S
N18	2"	160S	AIR/VACUUM TO HLP-PJM-00064	33'-11"	24590-WTP-MV-M59T-00016001 DET 3	2"-40S
N19	2"	160S	AIR/VACUUM TO HLP-PJM-00065	33'-11"	24590-WTP-MV-M59T-00016001 DET 3	2"-40S
N20	2"	160S	AIR/VACUUM TO HLP-PJM-00066	33'-11"	24590-WTP-MV-M59T-00016001 DET 3	2"-40S
N21	2"	160S	AIR/VACUUM TO HLP-PJM-00067	33'-11"	24590-WTP-MV-M59T-00016001 DET 3	2"-40S
N25	2"	160S	SPARE	34'-6"	24590-WTP-MV-M59T-00016001 DET 2	CAPPED 80S
N27	3"	80S	INLET	32'-2"	24590-WTP-MV-M59T-00016001 DET 2	3"-40S
N28	2"	160S	INLET	33'-0"	24590-WTP-MV-M59T-00016001 DET 2	2"-80S
N29	2"	160S	INLET	32'-2"	24590-WTP-MV-M59T-00016001 DET 2	2"-80S
N30	3"	80S	INLET	33'-4"	24590-WTP-MV-M59T-00016001 DET 2	3"-40S
N31	3"	160S	INLET	34'-4"	24590-WTP-MV-M59T-00016001 DET 2	3"-40S
N32	4"	80S	OUTLET W/ DIP PIPE (TO PUMP)	3'-0 1/2"	24590-WTP-MV-M59T-00016001 DET 3	4"-40S
N33	3"	80S	INLET	32'-2"	24590-WTP-MV-M59T-00016001 DET 2	3"-40S
N34	3"	80S	INLET WITH DIP PIPE (RECIRC)	34'-6"	24590-WTP-MV-M59T-00016001 DET 3	3"-40S
N35	4"	80S	INLET TO JACKET	5'-0"	24590-WTP-MV-M59T-00016001 DET 1	4"-40S
N36	4"	80S	OUTLET FROM JACKET	5'-0"	24590-WTP-MV-M59T-00016001 DET 1	4"-40S
N37	3"	80S	INLET AUTO SAMPLER RETURN	33'-3"	24590-WTP-MV-M59T-00016001 DET 2	3"-40S
			DELETED			
N39	2"	160S	SPARGE AIR	34'-6"	24590-WTP-MV-M59T-00016001 DET 4	1" OD X 0.083" NOM. WALL
N40	2"	160S	SPARGE AIR	34'-2"	24590-WTP-MV-M59T-00016001 DET 4	1" OD X 0.083" NOM. WALL
N41	2"	160S	SPARGE AIR	34'-2"	24590-WTP-MV-M59T-00016001 DET 4	1" OD X 0.083" NOM. WALL
N42	2"	160S	SPARGE AIR	34'-2"	24590-WTP-MV-M59T-00016001 DET 4	1" OD X 0.083" NOM. WALL
N43	2"	160S	SPARGE AIR	34'-2"	24590-WTP-MV-M59T-00016001 DET 4	1" OD X 0.083" NOM. WALL
N44	2"	160S	SPARGE AIR	34'-2"	24590-WTP-MV-M59T-00016001 DET 4	1" OD X 0.083" NOM. WALL
N45	2"	160S	SPARGE AIR	34'-2"	24590-WTP-MV-M59T-00016001 DET 4	1" OD X 0.083" NOM. WALL
N46	2"	160S	SPARGE AIR	34'-2"	24590-WTP-MV-M59T-00016001 DET 4	1" OD X 0.083" NOM. WALL
N47	2"	160S	SPARGE AIR	33'-4"	24590-WTP-MV-M59T-00016001 DET 4	1" OD X 0.083" NOM. WALL
N48	2"	160S	SPARGE AIR	33'-4"	24590-WTP-MV-M59T-00016001 DET 4	1" OD X 0.083" NOM. WALL
N49	2"	160S	SPARGE AIR	33'-4"	24590-WTP-MV-M59T-00016001 DET 4	1" OD X 0.083" NOM. WALL
N50	2"	160S	SPARGE AIR	33'-4"	24590-WTP-MV-M59T-00016001 DET 4	1" OD X 0.083" NOM. WALL
N51	2"	160S	SPARGE AIR	33'-4"	24590-WTP-MV-M59T-00016001 DET 4	1" OD X 0.083" NOM. WALL
N52	2"	160S	SPARGE AIR	33'-4"	24590-WTP-MV-M59T-00016001 DET 4	1" OD X 0.083" NOM. WALL
N53	2"	160S	SPARGE AIR	33'-4"	24590-WTP-MV-M59T-00016001 DET 4	1" OD X 0.083" NOM. WALL
N54	2"	160S	SPARGE AIR	33'-0"	24590-WTP-MV-M59T-00016001 DET 4	1" OD X 0.083" NOM. WALL
N55	2"	160S	SPARGE AIR	33'-0"	24590-WTP-MV-M59T-00016001 DET 4	1" OD X 0.083" NOM. WALL
N56	2"	160S	SPARGE AIR	33'-0"	24590-WTP-MV-M59T-00016001 DET 4	1" OD X 0.083" NOM. WALL
N57	2"	160S	SPARGE AIR	33'-0"	24590-WTP-MV-M59T-00016001 DET 4	1" OD X 0.083" NOM. WALL
N58	2"	160S	SPARGE AIR	33'-0"	24590-WTP-MV-M59T-00016001 DET 4	1" OD X 0.083" NOM. WALL
N59	2"	160S	SPARGE AIR	33'-0"	24590-WTP-MV-M59T-00016001 DET 4	1" OD X 0.083" NOM. WALL
N60	2"	160S	SPARGE AIR	33'-0"	24590-WTP-MV-M59T-00016001 DET 4	1" OD X 0.083" NOM. WALL
N61	2"	160S	SPARGE AIR	31'-11"	24590-WTP-MV-M59T-00016001 DET 4	1" OD X 0.083" NOM. WALL
N62	2"	160S	SPARGE AIR	31'-11"	24590-WTP-MV-M59T-00016001 DET 4	1" OD X 0.083" NOM. WALL
N63	2"	160S	SPARGE AIR	31'-11"	24590-WTP-MV-M59T-00016001 DET 4	1" OD X 0.083" NOM. WALL
N64	2"	160S	SPARGE AIR	31'-11"	24590-WTP-MV-M59T-00016001 DET 4	1" OD X 0.083" NOM. WALL
N65	2"	160S	SPARGE AIR	31'-11"	24590-WTP-MV-M59T-00016001 DET 4	1" OD X 0.083" NOM. WALL
N66	2"	160S	SPARGE AIR	31'-11"	24590-WTP-MV-M59T-00016001 DET 4	1" OD X 0.083" NOM. WALL
N67	2"	160S	SPARGE AIR	31'-11"	24590-WTP-MV-M59T-00016001 DET 4	1" OD X 0.083" NOM. WALL
N68	2"	160S	SPARGE AIR	31'-11"	24590-WTP-MV-M59T-00016001 DET 4	1" OD X 0.083" NOM. WALL
N69	2"	160S	SPARGE AIR	31'-11"	24590-WTP-MV-M59T-00016001 DET 4	1" OD X 0.083" NOM. WALL
N70	2"	160S	SPARGE AIR	31'-11"	24590-WTP-MV-M59T-00016001 DET 4	1" OD X 0.083" NOM. WALL
N71	2"	160S	SPARGE AIR	31'-11"	24590-WTP-MV-M59T-00016001 DET 4	1" OD X 0.083" NOM. WALL
N72	2"	160S	SPARGE AIR	31'-11"	24590-WTP-MV-M59T-00016001 DET 4	1" OD X 0.083" NOM. WALL
N73	2"	160S	SPARGE AIR	31'-11"	24590-WTP-MV-M59T-00016001 DET 4	1" OD X 0.083" NOM. WALL
N74	2"	160S	SPARGE AIR	31'-11"	24590-WTP-MV-M59T-00016001 DET 4	1" OD X 0.083" NOM. WALL
			DELETED			
N76	8"	80S	CAMERA PORT	33'-11"	24590-PTF-MV-HLP-00011 DET 13	8"-40S
N77	8"	80S	CAMERA PORT	31'-11"	24590-PTF-MV-HLP-00011 DET 13	8"-40S

GENERAL NOTES:

1. DELETED

2. FOR DISTANCE OF DIP PIPES TO BOTTOM HEAD, USE 2" CLEARANCE UNLESS OTHERWISE SPECIFIED.

3. "Z" DIMENSION FOR NOZZLES IS MEASURED FROM CENTERLINE OF NOZZLE FACE.

4, 5 & 6. DELETED

7. REVISED/ADDED/DELETED:

a) EXTENSIVE REVISION. CHANGES ARE NOT INDICATED BY CLOUDING.
b) INCORPORATED 24590-PTF-MVN-HLP-00004.

8. PULSE JET MIXER:

a) MINIMUM PLATE THICKNESS IS 7/16". SELLER TO DESIGN.
b) ALL WELDS SHALL BE FULL PENETRATION AND SMOOTH.
c) SELLER SHALL DESIGN SUPPORTS. PULSE JET MIXERS SHALL NOT BE SUPPORTED FROM THE PARENT VESSEL BOTTOM HEAD.
d) DESIGN TEMPERATURE IS THE SAME AS THE PARENT VESSEL DESIGN PRESSURE AND IS SHOWN IN THE MECHANICAL DATA SHEET.
e) DELETED
f) NON-DESTRUCTIVE EXAMINATION SHALL BE AS SPECIFIED FOR THE VESSEL COMPONENT QUALITY LEVEL.

REFERENCE DRAWINGS	
DWG NO	TITLE
24590-PTF-MV-HLP-00009	EQUIPMENT ASSEMBLY HLW LAG STORAGE VESSEL HLP-VSL-00027A
24590-PTF-MV-HLP-00011	SECTIONS AND DETAILS HLW LAG STORAGE VESSEL HLP-VSL-00027A & B
24590-WTP-MV-M69T-00001	PRESSURE VESSEL TOLERANCES STANDARD DETAILS
	DELETED
24590-WTP-MV-M69T-00007	THERMOWELL CONNECTION STANDARD DETAILS
24590-WTP-MV-M69T-00009	LIFTING LUGS STANDARD DETAILS
24590-WTP-MV-M69T-00011	WASHRINGS STANDARD DETAILS
24590-WTP-MV-M69T-00016001	VESSEL CONNECTIONS STANDARD DETAILS SHT 1 OF 3
24590-WTP-MV-M69T-00016003	VESSEL CONNECTIONS STANDARD DETAILS SHT 3 OF 3
24590-WTP-MV-M69T-00017	VESSEL INSPECTION MANWAY STANDARD DETAILS
24590-WTP-PW-P30T-00001	WTP END PREP DETAIL FOR FIELD BUTT WELDS
24590-PTF-M6-HLP-00001001	P&ID-PTF HLW LAG STORAGE & FEED BLENDING PROCESS SYSTEM VESSEL HLP-VSL-00027A
24590-PTF-M6-HLP-00005007	P&ID-PTF HLW LAG STORAGE & FEED BLENDING PROCESS SYSTEM VESSEL PJM HLP-VSL-00027A/B
24590-PTF-M6-HLP-00016001	P&ID-PTF HLW LAG STORAGE & FEED BLENDING PROCESS SYSTEM SPARGER RACK PSA-RK-00052
24590-PTF-M6-HLP-00016002	P&ID-PTF HLW LAG STORAGE & FEED BLENDING PROCESS SYSTEM SPARGER RACK PSA-RK-00052
24590-PTF-M6-HLP-00017001	P&ID-PTF HLW LAG STORAGE & FEED BLENDING PROCESS SYSTEM SPARGER RACK PSA-RK-00052
24590-PTF-M6-HLP-00017002	P&ID-PTF HLW LAG STORAGE & FEED BLENDING PROCESS SYSTEM SPARGER RACK PSA-RK-00052
24590-PTF-M6-HLP-00018001	P&ID-PTF HLW LAG STORAGE & FEED BLENDING PROCESS SYSTEM SPARGER RACK PSA-RK-00052
24590-PTF-M6-HLP-00018002	P&ID-PTF HLW LAG STORAGE & FEED BLENDING PROCESS SYSTEM SPARGER RACK PSA-RK-00052

THIS DRAWING TO BE READ IN CONJUNCTION WITH MECHANICAL SYSTEMS DATA SHEET 24590-PTF-MVD-HLP-00007

REV	DESCRIPTION	ORG	CHKD	RVWD	APVD	DATE
3	REVISED PER NOTE 17	[illegible]	CAF	JJ	JJ	2/24/11
2	REISSUED FOR PURCHASE, REVISED PER NOTE 7	RDS/RJR	YHCS	JJ	MH	4/29/04
1	REVISED AS MARKED, SEE NOTE 6	SS/RR	PA/CS	RES	MH	7/10/2003
0	ISSUED FOR PURCHASE	SS/RR	PA/CS	N/A	SK	10/3/2002

REVISION HISTORY

Q QUALITY LEVEL

Please note that source, special nuclear, and byproduct materials, as defined in the Atomic Energy Act of 1954 (AEA) are regulated at the U. S. Department of Energy (DOE) facilities exclusively by DOE acting pursuant to its AEA authority. DOE asserts that pursuant to AEA, it has sole and exclusive responsibility and authority to regulate source, special nuclear, and byproduct materials at DOE-owned nuclear facilities. Information contained herein on radionuclides is provided for process description purposes only.

PLEASE NOTE THAT SOURCE, SPECIAL NUCLEAR AND BYPRODUCT MATERIALS, AS DEFINED IN THE ATOMIC ENERGY ACT OF 1954 (AEA) ARE REGULATED AT THE U.S. DEPARTMENT OF ENERGY (DOE) FACILITIES EXCLUSIVELY BY DOE ACTING PURSUANT TO ITS AEA AUTHORITY. DOE ASSERTS, THAT PURSUANT TO THE AEA, IT HAS SOLE AND EXCLUSIVE RESPONSIBILITY AND AUTHORITY TO REGULATE SOURCE, SPECIAL NUCLEAR, AND BYPRODUCT MATERIALS AT DOE-OWNED NUCLEAR FACILITIES. INFORMATION CONTAINED HEREIN ON RADIONUCLIDES IS PROVIDED FOR PROCESS DESCRIPTION PURPOSES ONLY.

ISSUED BY [illegible]

ISSUE STAMP		
PROJECT No.	24590	
SITE	HANFORD	
AREA	200E	
BUILDING No.	10	
	BY	DATE
ORIGINATOR	S.SUHARTO / ROBERT RIDER	9/30/02
CHECKER	P. AVIGUETERO / C. SLATER	10/3/02
APPROVER	SUZANNE KIRK	10/3/02
REVIEWER	N/A	

CONTENT APPLICABLE TO ALARA? [X] YES [ ] NO
ADR NO. 24590-WTP-ADR-M-03-008 REV. 2
EMS SCREENING REQUIRED [X] YES [ ] NO EMS INITIAL IF YES [illegible]

RIVER PROTECTION PROJECT
WASTE TREATMENT PLANT
2435 STEVENS CENTER PLACE
RICHLAND, WA 99354

CONTRACT No. DE-AC27-01RV14136

EQUIPMENT ASSEMBLY HLW LAG STORAGE VESSEL HLP-VSL-00027A

SCALE NONE

24590-PTF-MV-HLP-00006

REV 3

"B" SIZE - 44x34

COMPUTER GENERATED - MANUAL DESIGN CHANGES NOT PERMITTED

02/22/2011 02:27 PM

FORM F_MASTER 03/2003

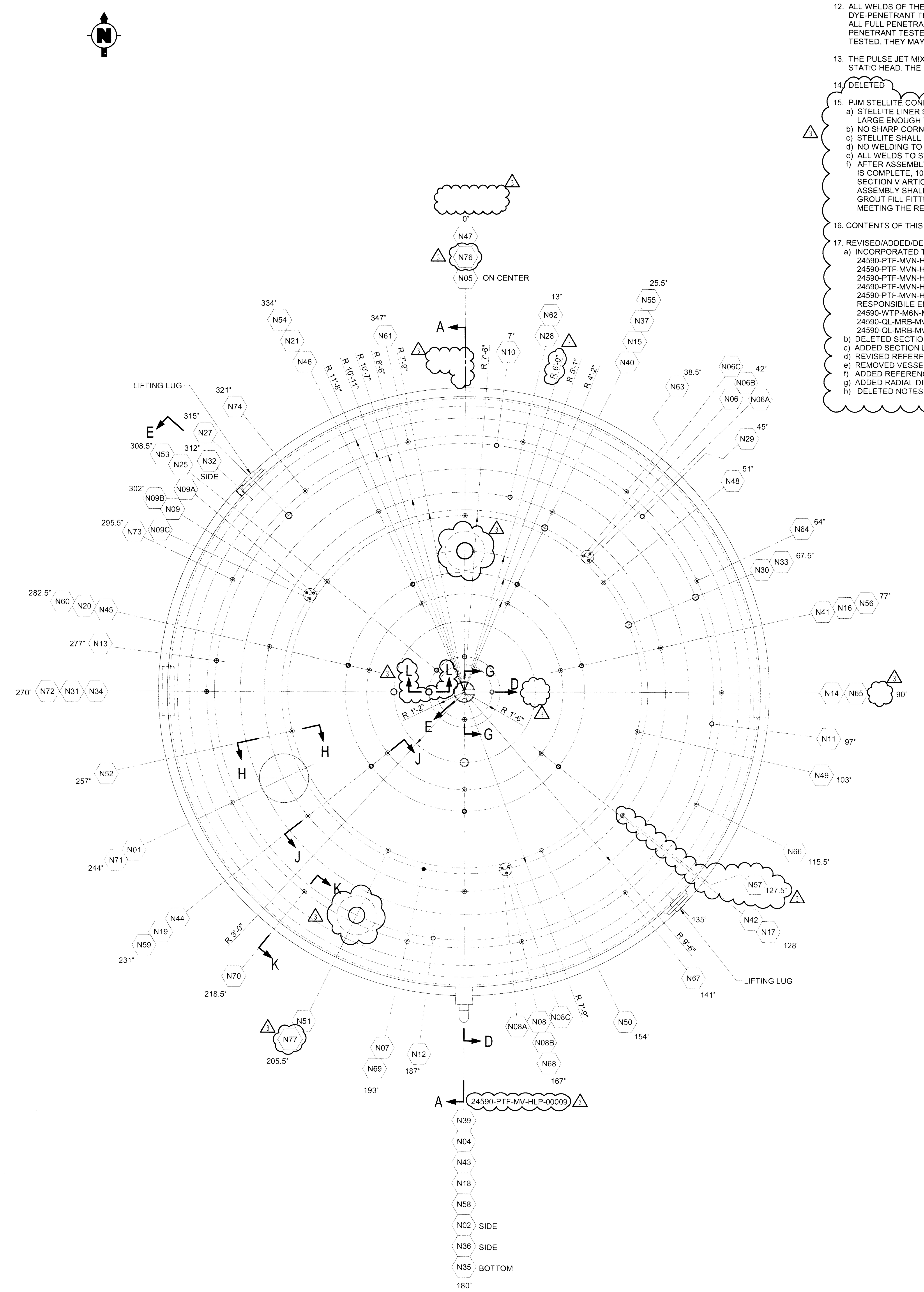

PLAN VIEW

SECTIONS D-D THRU M-M, SEE 24590-PTF-MV-HLP-00011

GENERAL NOTES:

9. PREPARE NOZZLE CONNECTIONS PER 24590-WTP-PW-P30T-00001.
10. DELETED
11. NOZZLES ARE READ FROM THE CENTER OF VESSEL TO OUTWARD.
12. ALL WELDS OF THE PULSE JET MIXER CLUSTER SHALL BE FULL PENETRATION, ULTRASONICALLY TESTED AND DYE-PENETRANT TESTED AS A MINIMUM.
    ALL FULL PENETRATION WELDS OF SUPPORT MEMBERS SHALL BE ULTRASONICALLY TESTED AND DYE PENETRANT TESTED. IF FILLET WELDS ARE PERMITTED BY THE BUYER AND ARE NOT READILY ULTRASONICALLY TESTED, THEY MAY BE DYE-PENETRANT TESTED WITH APPROVAL FROM THE BUYER.
13. THE PULSE JET MIXER CLUSTER SHALL BE DESIGNED FOR THE EXTERNAL PRESSURE OF THE PARENT VESSEL STATIC HEAD. THE PJM CLUSTER FILL SHALL NOT BE CONSIDERED AS SUPPORT FOR EXTERNAL PRESSURE.
14. DELETED
15. PJM STELLITE CONE TECH NOTES:
    a) STELLITE LINER SHALL BE ENCASED WITH A STAINLESS STEEL SHROUD (SAME MATERIAL AS PJM'S) WITH A GAP LARGE ENOUGH TO FILL WITH CERAMIC GROUT (AREMCO CERAMACAST 646-N ZIRCONIUM OXIDE OR EQUAL).
    b) NO SHARP CORNERS ARE ALLOWED. ALL INTERIOR AND EXTERIOR EDGES SHALL BE PROVIDED WITH A RADIUS.
    c) STELLITE SHALL PROJECT 1/4" (+,- 1/16") PAST THE STAINLESS STEEL SHROUD.
    d) NO WELDING TO THE STELLITE MATERIAL IS ALLOWED.
    e) ALL WELDS TO STAINLESS STEEL SHROUD REQUIRE VOLUMETRIC EXAMINATION.
    f) AFTER ASSEMBLY AND GROUTING OF THE PJM STELLITE CONE ASSEMBLIES WITH STAINLESS STEEL SHROUD IS COMPLETE, 100% RADIOGRAPHY OF ONE COMPLETED PJM ASSEMBLY PER VESSEL IS REQUIRED PER ASME SECTION V ARTICLE 2 FOR VALIDATING GROUT POUR CONSISTENCY. ONLY THE STRAIGHT PORTIONS OF THE ASSEMBLY SHALL MEET THE REQUIREMENTS OF ARTICLE 2. DUE TO GEOMETRY THE AREA ADJACENT TO THE GROUT FILL FITTINGS, ELBOWS, AND CONE WILL BE CONSIDERED INFORMATIONAL AND ARE EXEMPT FROM MEETING THE REQUIREMENTS OF T-270 AND T-280 OF ASME SECTION V ARTICLE 2.
16. CONTENTS OF THIS DOCUMENT ARE DANGEROUS WASTE PERMIT AFFECTING.
17. REVISED/ADDED/DELETED:
    a) INCORPORATED THE FOLLOWING DOCUMENTS:
       24590-PTF-MVN-HLP-00012
       24590-PTF-MVN-HLP-00020
       24590-PTF-MVN-HLP-00026 EXCEPT 14 AND 15 IN DESCRIPTION OF CHANGE LIST PER P & ID
       24590-PTF-MVN-HLP-00045, INCORPORATION MODIFIED PER RESPONSIBILE ENGINEER.
       24590-PTF-MVN-HLP-00048, INCORPORATION MODIFIED AND IS NO LONGER REQUIRED PER RESPONSIBILE ENGINEER
       24590-WTP-M6N-M80T-00003
       24590-QL-MRB-MVA0-00001-T0006
       24590-QL-MRB-MVA0-00001-T0007
    b) DELETED SECTION F-F
    c) ADDED SECTION L-L
    d) REVISED REFERENCE DRAWINGS LIST AND REMOVED REV COLUMN.
    e) REMOVED VESSEL COMPONENT QUALITY LEVELS CHART.
    f) ADDED REFERENCE DRAWING NUMBER ON PLAN VIEW.
    g) ADDED RADIAL DIMENSION FOR N77 NOZZLE ON PLAN VIEW.
    h) DELETED NOTES 10 AND 14.

NOZZLE	SIZE	SCHED/WALL	SERVICE/REMARKS	"Z" DIM	REF DWG-DET	CONN. PIPE/TUBE SIZE
N01	24"ID	0.5"	MANWAY	33'-4"	24590-WTP-MV-M59T-00017 DET 1	CAPPED
N02	8"	80S	OVERFLOW	28'-6"	24590-WTP-MV-M59T-00016001 DET 1	8"-40S
N04	4"	80S	SPARE	34'-6"	24590-WTP-MV-M59T-00016001 DET 2	CAPPED 80S
N05	10"	80S	VENT	34'-8"	24590-WTP-MV-M59T-00016001 DET 1	10"-10S
N06	6"	80S	IINSTRUMENTATION	33'-6"	24590-PTF-MV-HLP-00011 DET 14	N/A
N06A	1"	160S	BALANCE	SEE DET	24590-PTF-MV-HLP-00011 DET 14	1"-40S
N06B	1"	160S	DENSITY	SEE DET	24590-PTF-MV-HLP-00011 DET 14	1"-40S
N06C	1"	160S	LEVEL	33'-11"	24590-PTF-MV-HLP-00011 DET 14	1"-40S
N07	2" OD X 1"	160S	TEMPERATURE	33'-3"	24590-WTP-MV-M59T-00007 DET 1	3/4"-10S
N08	6"	80S	IINSTRUMENTATION	33'-6"	24590-PTF-MV-HLP-00011 DET 14	N/A
N08A	1"	160S	BALANCE	SEE DET	24590-PTF-MV-HLP-00011 DET 14	1"-40S
N08B	1"	160S	DENSITY	SEE DET	24590-PTF-MV-HLP-00011 DET 14	1"-40S
N08C	1"	160S	LEVEL	33'-11"	24590-PTF-MV-HLP-00011 DET 14	1"-40S
N09	6"	80S	IINSTRUMENTATION	33'-6"	24590-PTF-MV-HLP-00011 DET 14	N/A
N09A	1"	160S	BALANCE	SEE DET	24590-PTF-MV-HLP-00011 DET 14	1"-40S
N09B	1"	160S	DENSITY	SEE DET	24590-PTF-MV-HLP-00011 DET 14	1"-40S
N09C	1"	160S	LEVEL	33'-11"	24590-PTF-MV-HLP-00011 DET 14	1"-40S
N10	2"	160S	INLET TO WASH RING	32'-2"	24590-WTP-MV-M59T-00016001 DET 3	2"-40S
N11	2"	160S	INLET TO WASH RING	32'-2"	24590-WTP-MV-M59T-00016001 DET 3	2"-40S
N12	2"	160S	INLET TO WASH RING	32'-2"	24590-WTP-MV-M59T-00016001 DET 3	2"-40S
N13	2"	160S	INLET TO WASH RING	32'-2"	24590-WTP-MV-M59T-00016001 DET 3	2"-40S
N14	2"	160S	AIR/VACUUM TO HLP-PJM-00060	34'-6"	24590-WTP-MV-M59T-00016001 DET 3	2"-40S
N15	2"	160S	AIR/VACUUM TO HLP-PJM-00061	33'-11"	24590-WTP-MV-M59T-00016001 DET 3	2"-40S
N16	2"	160S	AIR/VACUUM TO HLP-PJM-00062	33'-11"	24590-WTP-MV-M59T-00016001 DET 3	2"-40S
N17	2"	160S	AIR/VACUUM TO HLP-PJM-00063	33'-11"	24590-WTP-MV-M59T-00016001 DET 3	2"-40S
N18	2"	160S	AIR/VACUUM TO HLP-PJM-00064	33'-11"	24590-WTP-MV-M59T-00016001 DET 3	2"-40S
N19	2"	160S	AIR/VACUUM TO HLP-PJM-00065	33'-11"	24590-WTP-MV-M59T-00016001 DET 3	2"-40S
N20	2"	160S	AIR/VACUUM TO HLP-PJM-00066	33'-11"	24590-WTP-MV-M59T-00016001 DET 3	2"-40S
N21	2"	160S	AIR/VACUUM TO HLP-PJM-00067	33'-11"	24590-WTP-MV-M59T-00016001 DET 3	2"-40S
N25	2"	160S	SPARE	34'-6"	24590-WTP-MV-M59T-00016001 DET 2	CAPPED 80S
N27	3"	80S	INLET	32'-2"	24590-WTP-MV-M59T-00016001 DET 2	3"-40S
N28	2"	160S	INLET	33'-0"	24590-WTP-MV-M59T-00016001 DET 2	2"-80S
N29	2"	160S	INLET	32'-2"	24590-WTP-MV-M59T-00016001 DET 2	2"-80S
N30	3"	80S	INLET	33'-4"	24590-WTP-MV-M59T-00016001 DET 2	3"-40S
N31	3"	160S	INLET	34'-4"	24590-WTP-MV-M59T-00016001 DET 2	3"-40S
N32	4"	80S	OUTLET W/ DIP PIPE (TO PUMP)	3'-0 1/2"	24590-WTP-MV-M59T-00016001 DET 3	4"-40S
N33	3"	80S	INLET	32'-2"	24590-WTP-MV-M59T-00016001 DET 2	3"-40S
N34	3"	80S	INLET WITH DIP PIPE (RECIRC)	34'-6"	24590-WTP-MV-M59T-00016001 DET 3	3"-40S
N35	4"	80S	INLET TO JACKET	-5'-0"	24590-WTP-MV-M59T-00016001 DET 1	4"-40S
N36	4"	80S	OUTLET FROM JACKET	5'-5"	24590-WTP-MV-M59T-00016001 DET 1	4"-40S
N37	3"	80S	INLET AUTO SAMPLER RETURN	33'-3"	24590-WTP-MV-M59T-00016001 DET 2	3"-40S
			DELETED			
N39	2"	160S	SPARGE AIR	34'-6"	24590-WTP-MV-M59T-00016001 DET 4	1" OD X 0.083" NOM. WALL
N40	2"	160S	SPARGE AIR	34'-2"	24590-WTP-MV-M59T-00016001 DET 4	1" OD X 0.083" NOM. WALL
N41	2"	160S	SPARGE AIR	34'-2"	24590-WTP-MV-M59T-00016001 DET 4	1" OD X 0.083" NOM. WALL
N42	2"	160S	SPARGE AIR	34'-2"	24590-WTP-MV-M59T-00016001 DET 4	1" OD X 0.083" NOM. WALL
N43	2"	160S	SPARGE AIR	34'-2"	24590-WTP-MV-M59T-00016001 DET 4	1" OD X 0.083" NOM. WALL
N44	2"	160S	SPARGE AIR	34'-2"	24590-WTP-MV-M59T-00016001 DET 4	1" OD X 0.083" NOM. WALL
N45	2"	160S	SPARGE AIR	34'-2"	24590-WTP-MV-M59T-00016001 DET 4	1" OD X 0.083" NOM. WALL
N46	2"	160S	SPARGE AIR	34'-2"	24590-WTP-MV-M59T-00016001 DET 4	1" OD X 0.083" NOM. WALL
N47	2"	160S	SPARGE AIR	33'-4"	24590-WTP-MV-M59T-00016001 DET 4	1" OD X 0.083" NOM. WALL
N48	2"	160S	SPARGE AIR	33'-4"	24590-WTP-MV-M59T-00016001 DET 4	1" OD X 0.083" NOM. WALL
N49	2"	160S	SPARGE AIR	33'-4"	24590-WTP-MV-M59T-00016001 DET 4	1" OD X 0.083" NOM. WALL
N50	2"	160S	SPARGE AIR	33'-4"	24590-WTP-MV-M59T-00016001 DET 4	1" OD X 0.083" NOM. WALL
N51	2"	160S	SPARGE AIR	33'-4"	24590-WTP-MV-M59T-00016001 DET 4	1" OD X 0.083" NOM. WALL
N52	2"	160S	SPARGE AIR	33'-4"	24590-WTP-MV-M59T-00016001 DET 4	1" OD X 0.083" NOM. WALL
N53	2"	160S	SPARGE AIR	33'-4"	24590-WTP-MV-M59T-00016001 DET 4	1" OD X 0.083" NOM. WALL
N54	2"	160S	SPARGE AIR	33'-0"	24590-WTP-MV-M59T-00016001 DET 4	1" OD X 0.083" NOM. WALL
N55	2"	160S	SPARGE AIR	33'-0"	24590-WTP-MV-M59T-00016001 DET 4	1" OD X 0.083" NOM. WALL
N56	2"	160S	SPARGE AIR	33'-0"	24590-WTP-MV-M59T-00016001 DET 4	1" OD X 0.083" NOM. WALL
N57	2"	160S	SPARGE AIR	33'-0"	24590-WTP-MV-M59T-00016001 DET 4	1" OD X 0.083" NOM. WALL
N58	2"	160S	SPARGE AIR	33'-0"	24590-WTP-MV-M59T-00016001 DET 4	1" OD X 0.083" NOM. WALL
N59	2"	160S	SPARGE AIR	33'-0"	24590-WTP-MV-M59T-00016001 DET 4	1" OD X 0.083" NOM. WALL
N60	2"	160S	SPARGE AIR	33'-0"	24590-WTP-MV-M59T-00016001 DET 4	1" OD X 0.083" NOM. WALL
N61	2"	160S	SPARGE AIR	31'-11"	24590-WTP-MV-M59T-00016001 DET 4	1" OD X 0.083" NOM. WALL
N62	2"	160S	SPARGE AIR	31'-11"	24590-WTP-MV-M59T-00016001 DET 4	1" OD X 0.083" NOM. WALL
N63	2"	160S	SPARGE AIR	31'-11"	24590-WTP-MV-M59T-00016001 DET 4	1" OD X 0.083" NOM. WALL
N64	2"	160S	SPARGE AIR	31'-11"	24590-WTP-MV-M59T-00016001 DET 4	1" OD X 0.083" NOM. WALL
N65	2"	160S	SPARGE AIR	31'-11"	24590-WTP-MV-M59T-00016001 DET 4	1" OD X 0.083" NOM. WALL
N66	2"	160S	SPARGE AIR	31'-11"	24590-WTP-MV-M59T-00016001 DET 4	1" OD X 0.083" NOM. WALL
N67	2"	160S	SPARGE AIR	31'-11"	24590-WTP-MV-M59T-00016001 DET 4	1" OD X 0.083" NOM. WALL
N68	2"	160S	SPARGE AIR	31'-11"	24590-WTP-MV-M59T-00016001 DET 4	1" OD X 0.083" NOM. WALL
N69	2"	160S	SPARGE AIR	31'-11"	24590-WTP-MV-M59T-00016001 DET 4	1" OD X 0.083" NOM. WALL
N70	2"	160S	SPARGE AIR	31'-11"	24590-WTP-MV-M59T-00016001 DET 4	1" OD X 0.083" NOM. WALL
N71	2"	160S	SPARGE AIR	31'-11"	24590-WTP-MV-M59T-00016001 DET 4	1" OD X 0.083" NOM. WALL
N72	2"	160S	SPARGE AIR	31'-11"	24590-WTP-MV-M59T-00016001 DET 4	1" OD X 0.083" NOM. WALL
N73	2"	160S	SPARGE AIR	31'-11"	24590-WTP-MV-M59T-00016001 DET 4	1" OD X 0.083" NOM. WALL
N74	2"	160S	SPARGE AIR	31'-11"	24590-WTP-MV-M59T-00016001 DET 4	1" OD X 0.083" NOM. WALL
			DELETED			
N76	8"	80S	CAMERA PORT	33'-11"	24590-PTF-MV-HLP-00011 DET 13	8"-40S
N77	8"	80S	CAMERA PORT	31'-11"	24590-PTF-MV-HLP-00011 DET 13	8"-40S

GENERAL NOTES:

1. DELETED
2. FOR DISTANCE OF DIP PIPES TO BOTTOM HEAD, USE 2" CLEARANCE UNLESS OTHERWISE SPECIFIED.
3. "Z" DIMENSION FOR NOZZLES IS MEASURED FROM CENTERLINE OF NOZZLE FACE.
4, 5 & 6. DELETED
7. REVISED/ADDED/DELETED:
   a) EXTENSIVE REVISION. CHANGES ARE NOT INDICATED BY CLOUDING.
   b) INCORPORATED 24590-PTF-MVN-HLP-00004.
8. PULSE JET MIXER:
   a) MINIMUM PLATE THICKNESS IS 7/16". SELLER TO DESIGN.
   b) ALL WELDS SHALL BE FULL PENETRATION AND SMOOTH.
   c) SELLER SHALL DESIGN SUPPORTS. PULSE JET MIXERS SHALL NOT BE SUPPORTED FROM THE PARENT VESSEL BOTTOM HEAD.
   d) DESIGN TEMPERATURE IS THE SAME AS THE PARENT VESSEL DESIGN PRESSURE AND IS SHOWN IN THE MECHANICAL DATA SHEET.
   e) DELETED
   f) NON-DESTRUCTIVE EXAMINATION SHALL BE AS SPECIFIED FOR THE VESSEL COMPONENT QUALITY LEVEL.

REFERENCE DRAWINGS	
DWG NO	TITLE
24590-PTF-MV-HLP-00009	EQUIPMENT ASSEMBLY HLW LAG STORAGE VESSEL HLP-VSL-00027A
24590-PTF-MV-HLP-00011	SECTIONS AND DETAILS HLW LAG STORAGE VESSEL HLP-VSL-00027A & B
24590-WTP-MV-M59T-00001	PRESSURE VESSEL TOLERANCES STANDARD DETAILS
	DELETED
24590-WTP-MV-M59T-00007	THERMOWELL CONNECTION STANDARD DETAILS
24590-WTP-MV-M59T-00009	LIFTING LUGS STANDARD DETAILS
24590-WTP-MV-M59T-00011	WASH RINGS STANDARD DETAILS
24590-WTP-MV-M59T-00016001	VESSEL CONNECTIONS STANDARD DETAILS SHT 1 OF 3
24590-WTP-MV-M59T-00016003	VESSEL CONNECTIONS STANDARD DETAILS SHT 3 OF 3
24590-WTP-MV-M59T-00017	VESSEL INSPECTION MANWAY STANDARD DETAILS
24590-WTP-PW-P30T-00001	WTP END PREP DETAIL FOR FIELD BUTT WELDS
24590-PTF-M6-HLP-00001001	P&ID-PTF HLW LAG STORAGE & FEED BLENDING PROCESS SYSTEM VESSEL HLP-VSL-00027A
24590-PTF-M6-HLP-00005007	P&ID-PTF HLW LAG STORAGE & FEED BLENDING PROCESS SYSTEM VESSEL PJM HLP-VSL-00027A/B
24590-PTF-M6-HLP-00016001	P&ID-PTF HLW LAG STORAGE & FEED BLENDING PROCESS SYSTEM SPARGER RACK PSA-RK-00052
24590-PTF-M6-HLP-00016002	P&ID-PTF HLW LAG STORAGE & FEED BLENDING PROCESS SYSTEM SPARGER RACK PSA-RK-00052
24590-PTF-M6-HLP-00017001	P&ID-PTF HLW LAG STORAGE & FEED BLENDING PROCESS SYSTEM SPARGER RACK PSA-RK-00052
24590-PTF-M6-HLP-00017002	P&ID-PTF HLW LAG STORAGE & FEED BLENDING PROCESS SYSTEM SPARGER RACK PSA-RK-00052
24590-PTF-M6-HLP-00018001	P&ID-PTF HLW LAG STORAGE & FEED BLENDING PROCESS SYSTEM SPARGER RACK PSA-RK-00052
24590-PTF-M6-HLP-00018002	P&ID-PTF HLW LAG STORAGE & FEED BLENDING PROCESS SYSTEM SPARGER RACK PSA-RK-00052

THIS DRAWING TO BE READ IN CONJUNCTION WITH MECHANICAL SYSTEMS DATA SHEET 24590-PTF-MVD-HLP-00007

Please note that source, special nuclear, and byproduct materials, as defined in the Atomic Energy Act of 1954 (AEA) are regulated at the U. S. Department of Energy (DOE) facilities exclusively by DOE acting pursuant to its AEA authority. DOE asserts that pursuant to AEA, it has sole and exclusive responsibility and authority to regulate source, special nuclear, and byproduct materials at DOE-owned nuclear facilities. Information contained herein on radionuclides is provided for process description purposes only.

PLEASE NOTE THAT SOURCE, SPECIAL NUCLEAR AND BYPRODUCT MATERIALS, AS DEFINED IN THE ATOMIC ENERGY ACT OF 1954 (AEA), ARE REGULATED AT THE U.S. DEPARTMENT OF ENERGY (DOE) FACILITIES EXCLUSIVELY BY DOE ACTING PURSUANT TO ITS AEA AUTHORITY. DOE ASSERTS, THAT PURSUANT TO THE AEA, IT HAS SOLE AND EXCLUSIVE RESPONSIBILITY AND AUTHORITY TO REGULATE SOURCE, SPECIAL NUCLEAR, AND BYPRODUCT MATERIALS AT DOE-OWNED NUCLEAR FACILITIES. INFORMATION CONTAINED HEREIN ON RADIONUCLIDES IS PROVIDED FOR PROCESS DESCRIPTION PURPOSES ONLY.

REV	DESCRIPTION	ORG	CHKD	RVWD	APVD	DATE
3	REVISED PER NOTE 17	BM	CLL	JJ	JJ	2/24/11
2	REISSUED FOR PURCHASE, REVISED PER NOTE 7	RDS/RJR	YH/CS	JJ	MH	4/29/04
1	REVISED AS MARKED, SEE NOTE 6	SS/RR	PA/CS	RES	MH	7/10/2003
0	ISSUED FOR PURCHASE	SS/RR	PA/CS	N/A	SK	10/3/2002

REVISION HISTORY

Q QUALITY LEVEL

ISSUED BY RPP-WTP PDC — ISSUE STAMP

PROJECT No.	24590
SITE	HANFORD
AREA	200E
BUILDING No.	10

RIVER PROTECTION PROJECT
WASTE TREATMENT PLANT
2435 STEVENS CENTER PLACE
RICHLAND, WA 99354

CONTRACT No: DE-AC27-01RV14136

	BY	DATE
ORIGINATOR	S.SUHARTO / ROBERT RIDER	9/30/02
CHECKER	P. AVIGUETERO / C. SLATER	10/3/02
APPROVER	SUZANNE KIRK	10/3/02
REVIEWER	N/A	

EQUIPMENT ASSEMBLY
HLW LAG STORAGE VESSEL
HLP-VSL-00027A

CONTENT APPLICABLE TO ALARA? [XX] YES [ ] NO
ADR NO. 24590-WTP-ADR-M-03-008 REV 2
E&NS SCREENING REQUIRED [X] YES [ ] NO E&NS INITIAL IF YES

SCALE: NONE
24590-PTF-MV-HLP-00006 REV 3

'E' SIZE - 44x34
SCREENING IS REQUIRED FOR DRAWING TYPES IDENTIFIED IN 24590-WTP-3PP-SREG-002
COMPUTER GENERATED - MANUAL DESIGN CHANGES NOT PERMITTED

02/22/2011 02:27 PM

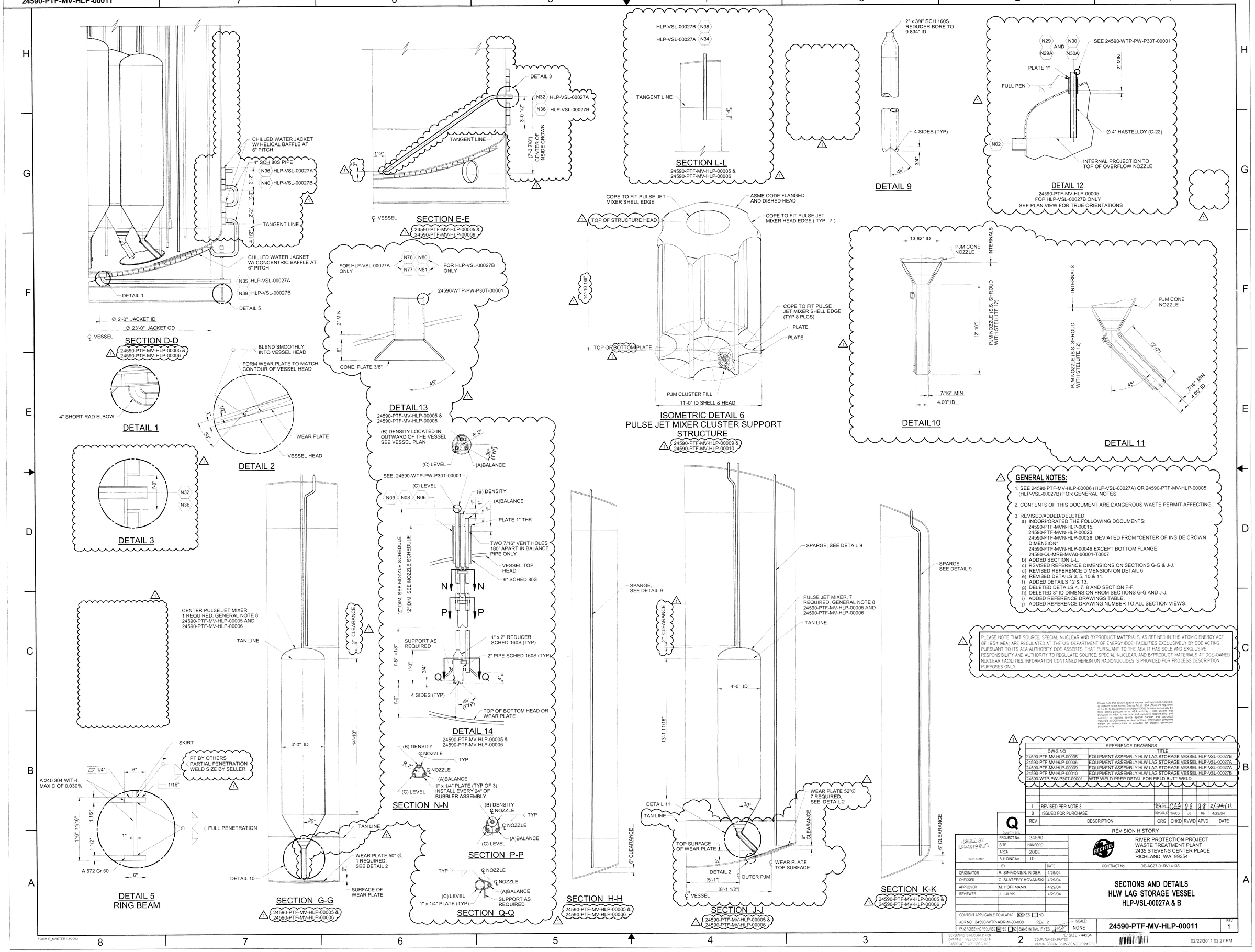

GENERAL NOTES:

1. SEE 24590-PTF-MV-HLP-00006 (HLP-VSL-00027A) OR 24590-PTF-MV-HLP-00005 (HLP-VSL-00027B) FOR GENERAL NOTES.
2. CONTENTS OF THIS DOCUMENT ARE DANGEROUS WASTE PERMIT AFFECTING.
3. REVISED/ADDED/DELETED:
   a) INCORPORATED THE FOLLOWING DOCUMENTS:
      24590-FTF-MVN-HLP-00015.
      24590-FTF-MVN-HLP-00023.
      24590-FTF-MVN-HLP-00028, DEVIATED FROM "CENTER OF INSIDE CROWN DIMENSION"
      24590-FTF-MVN-HLP-00049 EXCEPT BOTTOM FLANGE.
      24590-GL-MRB-MVA0-00001-T0007
   b) ADDED SECTION L-L.
   c) REVISED REFERENCE DIMENSIONS ON SECTIONS G-G & J-J.
   d) REVISED REFERENCE DIMENSION ON DETAIL 6.
   e) REVISED DETAILS 3, 5, 10 & 11.
   f) ADDED DETAILS 12 & 13.
   g) DELETED DETAILS 4, 7, 8 AND SECTION F-F.
   h) DELETED 8" ID DIMENSION FROM SECTIONS G-G AND J-J.
   i) ADDED REFERENCE DRAWINGS TABLE.
   j) ADDED REFERENCE DRAWING NUMBER TO ALL SECTION VIEWS.

PLEASE NOTE THAT SOURCE, SPECIAL NUCLEAR AND BYPRODUCT MATERIALS, AS DEFINED IN THE ATOMIC ENERGY ACT OF 1954 (AEA) ARE REGULATED AT THE US DEPARTMENT OF ENERGY (DOE) FACILITIES EXCLUSIVELY BY DOE ACTING PURSUANT TO ITS AEA AUTHORITY. DOE ASSERTS, THAT PURSUANT TO THE AEA, IT HAS SOLE AND EXCLUSIVE RESPONSIBILITY AND AUTHORITY TO REGULATE SOURCE, SPECIAL NUCLEAR, AND BYPRODUCT MATERIALS AT DOE-OWNED NUCLEAR FACILITIES. INFORMATION CONTAINED HEREIN ON RADIONUCLIDES IS PROVIDED FOR PROCESS DESCRIPTION PURPOSES ONLY.

Please note that source, special nuclear, and byproduct materials, as defined in the Atomic Energy Act of 1954 (AEA) are regulated at the U.S. Department of Energy (DOE) facilities exclusively by DOE acting pursuant to its AEA authority. DOE asserts that pursuant to AEA, it has sole and exclusive responsibility and authority to regulate source, special nuclear, and byproduct materials at DOE-owned nuclear facilities. Information contained herein on radionuclides is provided for process description purposes only.

REFERENCE DRAWINGS	
DWG NO	TITLE
24590-PTF-MV-HLP-00005	EQUIPMENT ASSEMBLY HLW LAG STORAGE VESSEL HLP-VSL-00027B
24590-PTF-MV-HLP-00006	EQUIPMENT ASSEMBLY HLW LAG STORAGE VESSEL HLP-VSL-00027A
24590-PTF-MV-HLP-00009	EQUIPMENT ASSEMBLY HLW LAG STORAGE VESSEL HLP-VSL-00027A
24590-PTF-MV-HLP-00010	EQUIPMENT ASSEMBLY HLW LAG STORAGE VESSEL HLP-VSL-00027B
24590-WTP-PW-P30T-00001	WTP WELD PREP DETAIL FOR FIELD BUTT WELD

REV	DESCRIPTION	ORG	CHKD	RVWD	APVD	DATE
1	REVISED PER NOTE 3	~~RDS~~ CGT	~~YHCS~~ JJ	JJ	MH	~~4/29/04~~ 2/24/11
0	ISSUED FOR PURCHASE	RDS/RJR	YHCS	JJ	MH	4/29/04

REVISION HISTORY

Q

PROJECT No.	24590	
SITE	HANFORD	
AREA	200E	
BUILDING No.	10	
	BY	DATE
ORIGINATOR	R. SIMMONS/R. RIDER	4/29/04
CHECKER	C. SLATER/Y HOVANSKI	4/29/04
APPROVER	M. HOFFMANN	4/29/04
REVIEWER	J. JULYK	4/29/04

CONTENT APPLICABLE TO ALARA? [XX] YES [ ] NO
ADR NO. 24590-WTP-ADR-M-03-006 REV. 2
FNS TOREVIEW REQUIRED [X] YES [ ] NO ESNS INITIAL IF YES

BECHTEL

RIVER PROTECTION PROJECT
WASTE TREATMENT PLANT
2435 STEVENS CENTER PLACE
RICHLAND, WA 99354

CONTRACT No: DE-AC27-01RV14136

SECTIONS AND DETAILS HLW LAG STORAGE VESSEL HLP-VSL-00027A & B

SCALE: NONE

24590-PTF-MV-HLP-00011

REV 1

'E' SIZE - 44x34

COMPUTER GENERATED MANUAL DESIGN CHANGES NOT PERMITTED

02/22/2011 02:27 PM

FORM E_MASTER 03/2003

Quarter Ending 09/30/11 24590-PTF-PCN-ENV-10-033

Hanford Facility RCRA Permit Modification Notification Form
Part III, Operating Unit 10
Waste Treatment and Immobilization Plant

Index

Page 2 of 3: Hanford Facility RCRA Permit, Part III, Operating Unit 10, Waste Treatment and Immobilization Plant
Replace Equipment Assembly Drawing for the PTF HLW Feed Blend Vessel (HLP-VSL-00028) in Appendix 8.6 of the Dangerous Waste Permit (DWP).

Submitted by Co-Operator:

D. M. Busche 6/7/11 Date

Reviewed by ORP Program Office:

D. L. Noyes 7/8/11 Date

Quarter Ending 09/30/11

24590-PTF-PCN-ENV-10-033

Hanford Facility RCRA Permit Modification Notification Form	
Unit: **Waste Treatment and Immobilization Plant**	Permit Part: **Part III, Operating Unit 10**

Description of Modification:

The purpose of this Class 1 prime modification is to update the Equipment Assembly drawings for the PTF HLW Feed Blend Vessel (HLP-VSL-00028) in Appendix 8.6 of the DWP. The mechanical data sheet associated with this vessel is located in 24590-PTF-PCN-ENV-08-006.

The following drawings are being submitted to replace the drawings currently in Appendix 8.6.

Appendix 8.6			
Replace:	24590-PTF-MV-HLP-00004, Rev. 2	With:	24590-PTF-MV-HLP-00004, Rev. 3
	24590-PTF-MV-HLP-00012, Rev. 0		24590-PTF-MV-HLP-00012, Rev. 1
	24590-PTF-MV-HLP-00013, Rev. 0		24590-PTF-MV-HLP-00013, Rev. 1

This modification requests Ecology approval and incorporation into the permit the specific changes to the above DWP document. Revisions are the result of ongoing design (changes from vendor preliminary data to vendor detailed design), seismic and mixing analyses, and general criteria from design verification review. The following identifies the significant changes that have been incorporated:

Equipment Assembly Drawings (24590-PTF-MV-HLP-00004)

- Modified, deleted, and added notes and references; updated ALARA design specification reference; deleted vessel components quality levels table
- Added PJM Stellite Cone Tech notes
- Updated Nozzle Table; added and deleted nozzles
- Deleted Sections F-F and J-J and added Section M-M

Equipment Assembly Drawings (24590-PTF-MV-HLP-00012)

- Added notes and references; updated ALARA design specification reference
- Deleted internal piping and recirculation nozzle associated with eliminated recirculation pumps
- Revised external shell side water jacket size and nozzle dimensions
- Added Detail 18, dimensions, and note on skirt vent
- Added dimensions and notes on PJM, ring beam
- Revised PJM nozzles
- Added and deleted nozzles

Equipment Assembly Drawings (24590-PTF-MV-HLP-00013)

- Added notes and references; updated ALARA design specification reference
- Deleted recirculation nozzle and internal piping associated with eliminated recirculation pumps from Section D-D; Deleted Sections F-F, J-J, and added Section M-M; deleted Details 4, 7, and 8
- Revised external shell side water jacket size and nozzle dimensions (Sections D-D and E-E, Detail 3)
- Revised PJM nozzle details (Sections G-G, H-H, Details 10 and 11)
- Added Details 12 and 13 for revised and new nozzles
- Added Detail 14 and Sections N-N, P-P, and Q-Q for Instrumentation nozzles (N04, N08, N09)

Quarter Ending 09/30/11 24590-PTF-PCN-ENV-10-033

This modification requests Ecology approval and incorporation of the following outstanding change document(s) into the permit. Although not yet incorporated into the revised documents included in this PCN, the listed outstanding change document(s) are intended to be incorporated into the permit:

24590-PTF-MV-HLP-00013

24590-QL-MRB-MVA0-00001-T0008

WAC 173-303-830 Modification Class:	Class 1	Class [1]1	Class 2	Class 3
Please mark the Modification Class:		X		

Enter relevant WAC 173-303-830, Appendix I Modification citation number: NA

Enter wording of WAC 173-303-830, Appendix I Modification citation:

In accordance with WAC 173-303-830(4)(d)(i), this modification notification is requested to be reviewed and approved as a Class [1]1 modification. WAC 173-303-830(4)(d)(ii)(A) states, "Class 1 modifications apply to minor changes that keep the permit current with routine changes to the facility or its operation. These changes do not substantially alter the permit conditions or reduce the capacity of the facility to protect human health or the environment. In the case of Class 1 modifications, the director may require prior approval."

Modification Approved/Concur: ☑ Yes ☐ Denied (state reason below)

Reason for denial:

Reviewed by Ecology:

for 8-10-11

J. J. Wallace Date

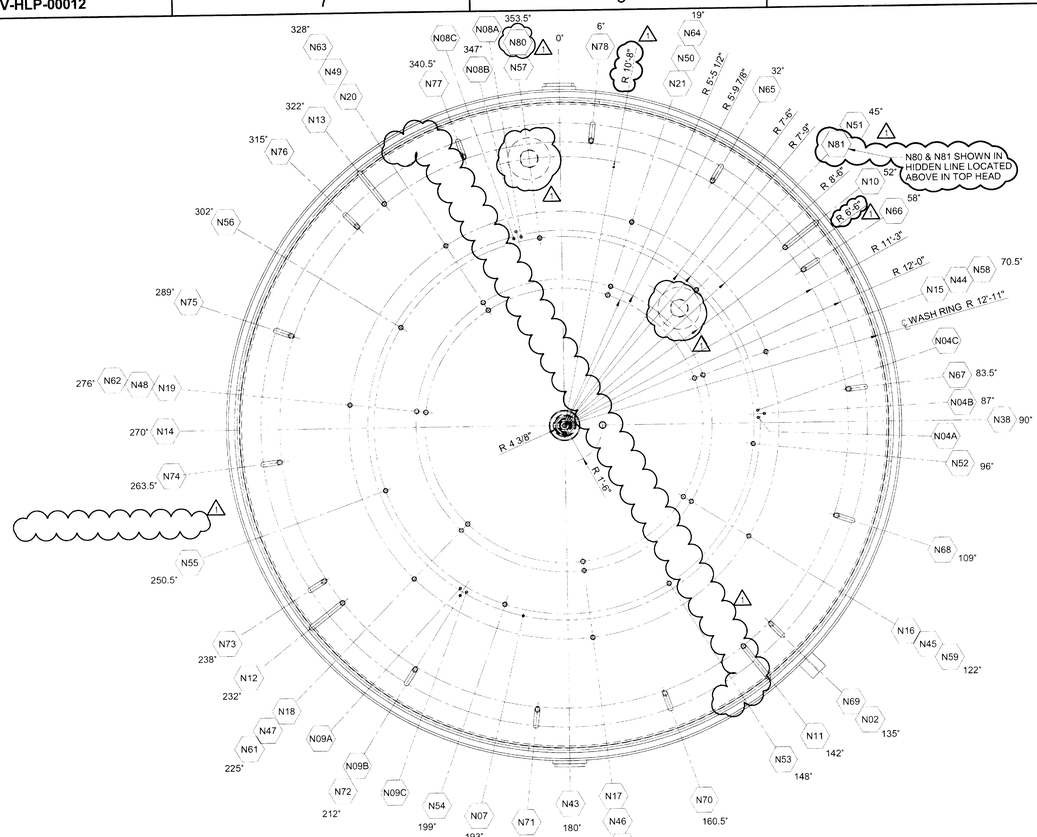

SECTION B-B

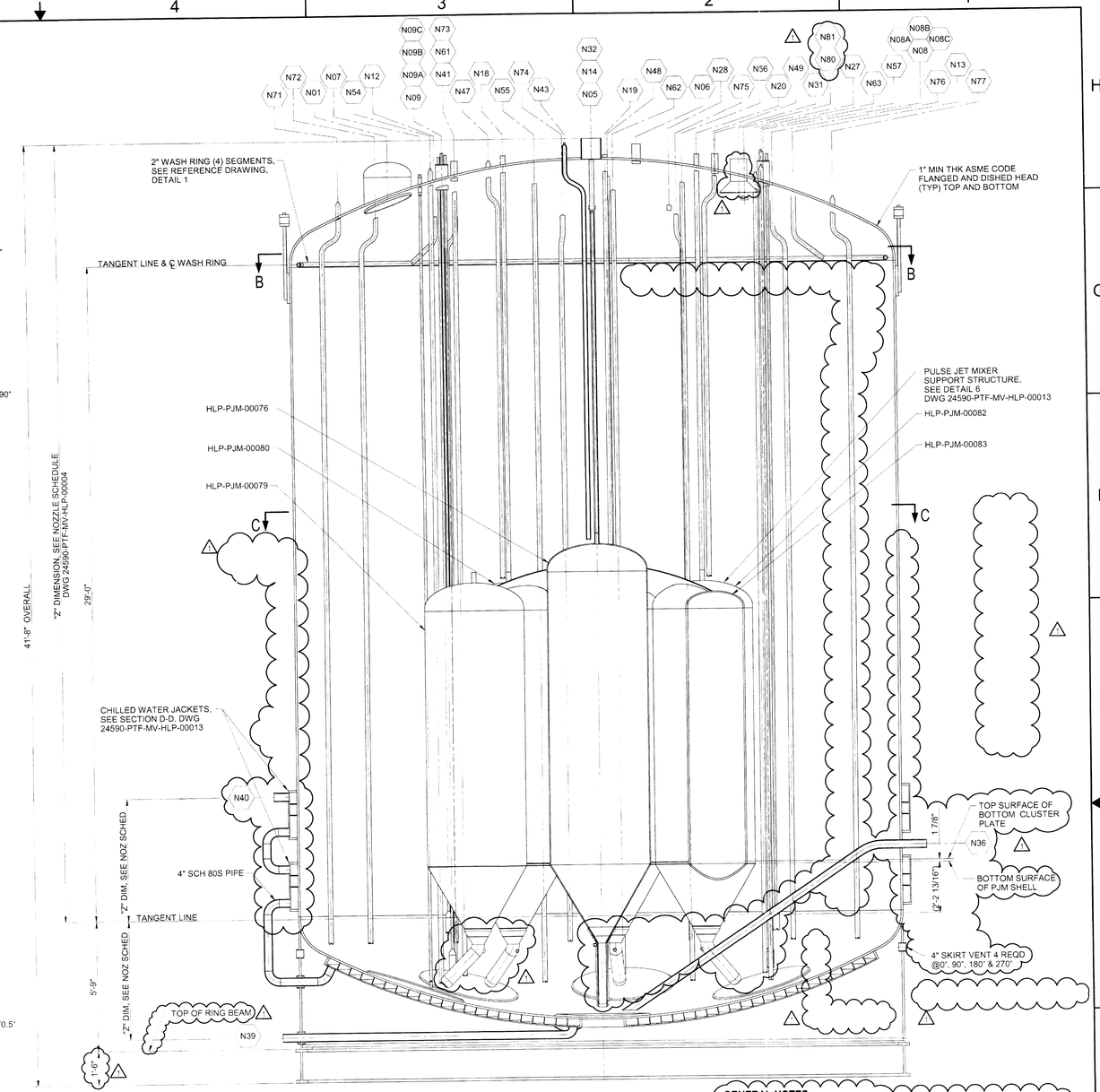

SECTION A-A

24590-PTF-MV-HLP-00004
(SEE PLAN VIEW FOR CORRECT NOZZLE NUMBERS & ORIENTATION)

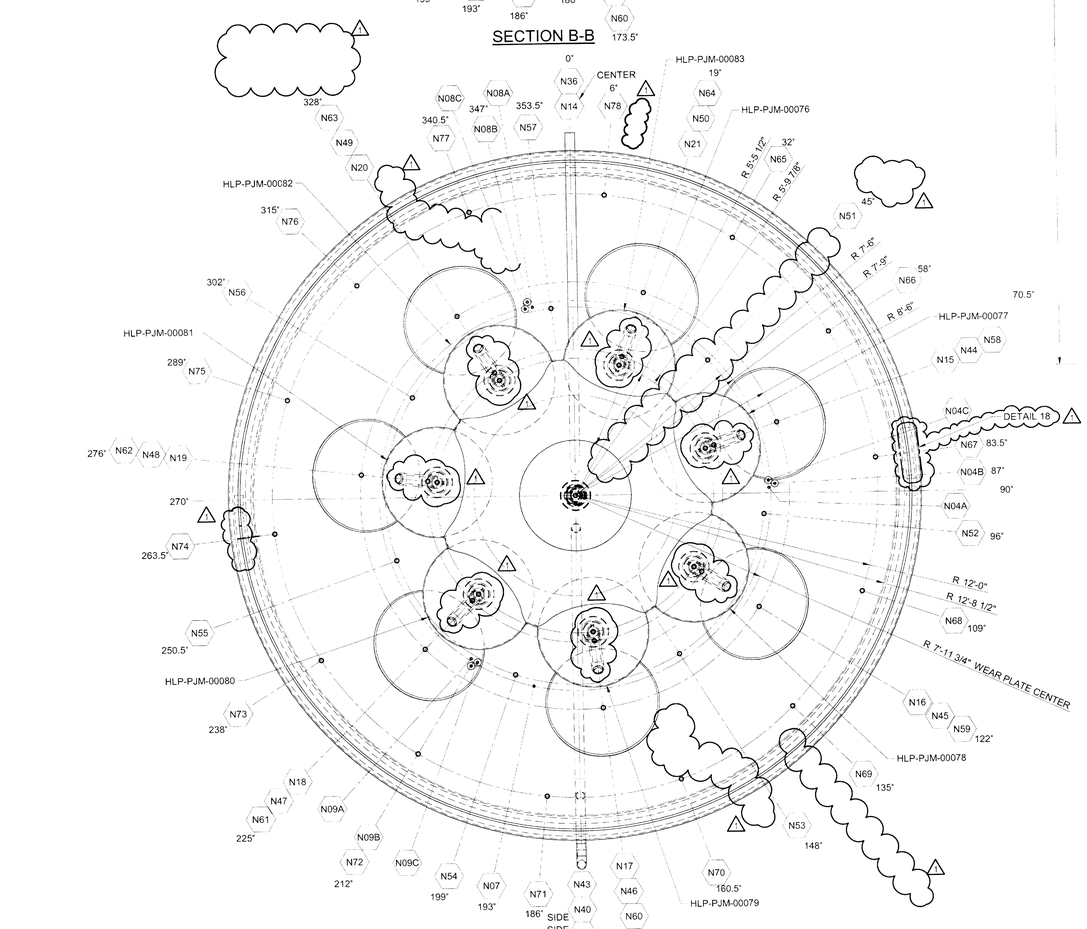

SECTION C-C

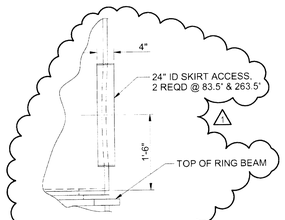

DETAIL 18

GENERAL NOTES:

1. FOR GENERAL NOTES, SEE 24590-PTF-MV-HLP-00004.
2. CONTENTS OF THIS DOCUMENT ARE DANGEROUS WASTE PERMIT AFFECTING.
3. REVISED/ADDED/DELETED.
   a) INCORPORATED THE FOLLOWING DOCUMENTS:
      24590-PTF-MVN-HLP-00016.
      24590-PTF-MVN-HLP-00024.
      24590-PTF-MVN-HLP-00032.
   b) ADDED DETAIL 18.
   c) ADDED DIMENSION AND NOTE ON SKIRT VENT.
   d) ADDED DIMENSION ON BOTTOM SURFACE OF PJM AND TANGENT LINE ON SECTION A-A.
   e) REVISED PJM NOZZLES ON SECTIONS A-A & C-C.
   f) ADDED NOZZLES N80 & N81 TO SECTION A-A
   g) ADDED NOZZLES N80 & N81 WITH HIDDEN LINES ON SECTION B-B
   h) ADDED DRAWING INDEX
   i) ADDED DIMENSION AND NOTE TO RING BEAM ON SECTION A-A.
   j) INCORPORATED 24590-WTP-M6N-M80T-00002 WHICH IS NO LONGER REQUIRED PER 24590-WTP-RPT-ENS-07-001, REV 23 AS LEAD DOCUMENT REFORT IS CANCELLED.

REFERENCE DRAWINGS	
DWG NO	TITLE
24590-PTF-MV-HLP-00004	EQUIPMENT ASSEMBLY HLW FEED BLEND VESSEL HLP-VSL-00028
24590-PTF-MV-HLP-00013	SECTIONS AND DETAILS HLW FEED BLEND VESSEL HLP-VSL-00028

Please note that source, special nuclear, and byproduct materials, as defined in the Atomic Energy Act of 1954 (AEA) are regulated at the U. S. Department of Energy (DOE) facilities exclusively by DOE acting pursuant to its AEA. It has sole and exclusive responsibility and authority to regulate source, special nuclear, and byproduct materials at DOE-owned nuclear facilities. Information contained herein on radionuclides is provided for process description purposes only.

REV	DESCRIPTION	ORG	CHKD	RVWD	APVD	DATE
1	REVISED PER NOTE 3	RDS/RJR	THCS	JJ	MH	2/24/11
0	ISSUED FOR PURCHASE	RDS/RJR	THCS	JJ	MH	4/29/04

REVISION HISTORY

Q

PLEASE NOTE THAT SOURCE, SPECIAL NUCLEAR AND BYPRODUCT MATERIALS, AS DEFINED IN THE ATOMIC ENERGY ACT OF 1954 (AEA) ARE REGULATED AT THE U.S. DEPARTMENT OF ENERGY (DOE) FACILITIES EXCLUSIVELY BY DOE ACTING PURSUANT TO ITS AEA AUTHORITY. DOE ASSERTS, THAT PURSUANT TO THE AEA, IT HAS SOLE AND EXCLUSIVE RESPONSIBILITY AND AUTHORITY TO REGULATE SOURCE, SPECIAL NUCLEAR, AND BYPRODUCT MATERIALS AT DOE-OWNED NUCLEAR FACILITIES. INFORMATION CONTAINED HEREIN ON RADIONUCLIDES IS PROVIDED FOR PROCESS DESCRIPTION PURPOSES ONLY.

ISSUED BY RIDER/TP 5/5
ISSUE STAMP

PROJECT No.	24590	
SITE	HANFORD	
AREA	200E	
BUILDING No.	10	
	BY	DATE
ORIGINATOR	R. SIMMONS/R. RIDER	4/29/04
CHECKER	C. SLATER/Y.HOVANSK	4/29/04
APPROVER	M. HOFFMANN	4/29/04
REVIEWER	J. JULYK	4/29/04

CONTENT APPLICABLE TO ALARA? [X] YES [ ] NO
ADR NO: 24590-WTP-ADR-M-03-008 REV: 2
E&NS SCREENING REQUIRED [X] YES [ ] NO E&NS INITIAL IF YES

BECHTEL

RIVER PROTECTION PROJECT
WASTE TREATMENT PLANT
2435 STEVENS CENTER PLACE
RICHLAND, WA 99354

CONTRACT No: DE-AC27-01RV14136

LAYOUT OF INTERNALS HLW FEED BLEND VESSEL HLP-VSL-00028

SCALE: NONE
24590-PTF-MV-HLP-00012
REV: 1

SCREENING IS REQUIRED FOR DRAWING TYPES IDENTIFIED IN 24590-WTP-GPR-ENG-002

COMPUTER GENERATED. MANUAL EDITS/CHANGES NOT PERMITTED

8½" SIZE - 44x34

02/24/2011 10:54 AM

FORM E_MASTER 03/2003

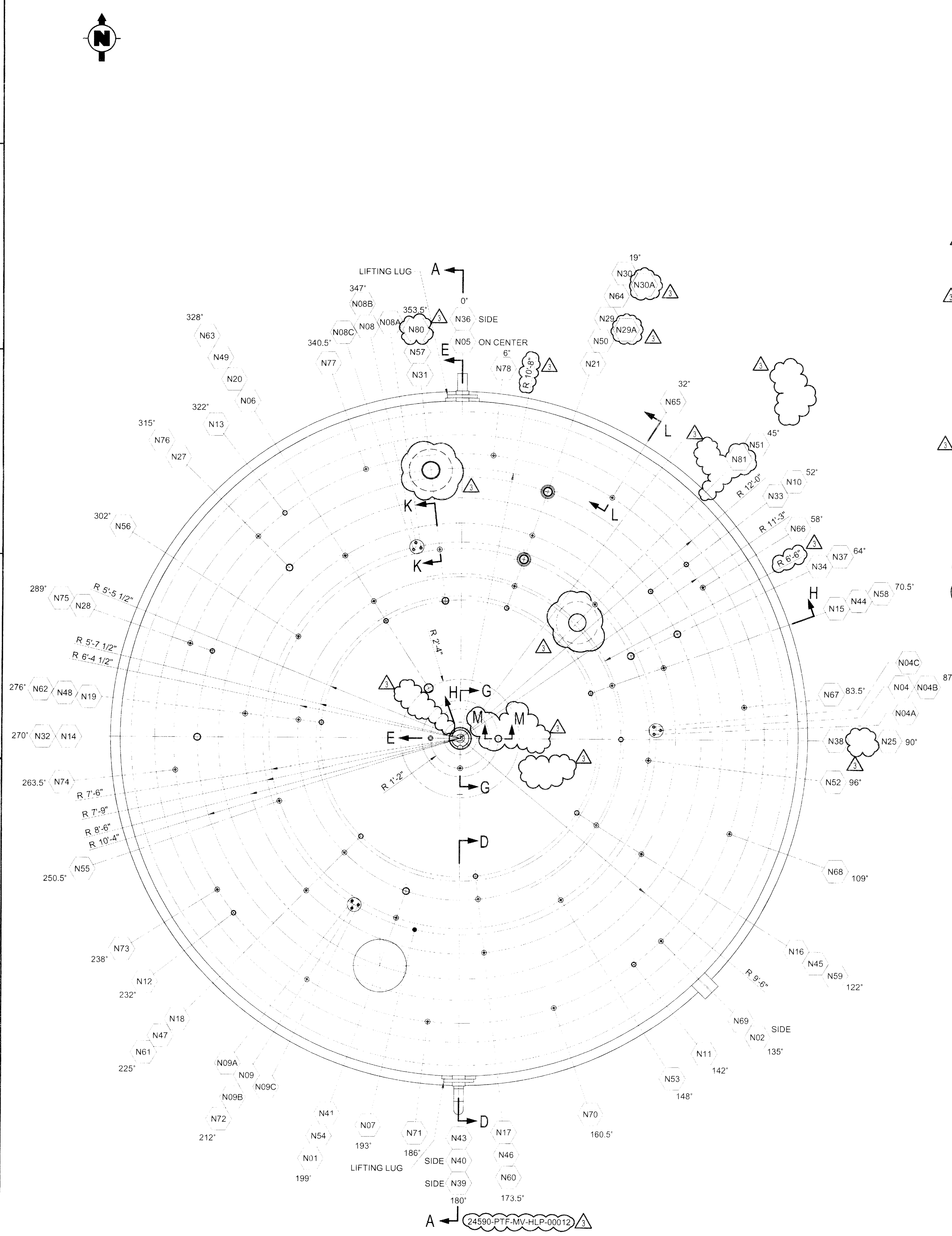

PLAN VIEW

SECTIONS D-D THRU L-L, SEE 24590-PTF-MV-HLP-00013

GENERAL NOTES:

1. DELETED
2. FOR DISTANCE OF DIP PIPES TO BOTTOM HEAD, USE 2" CLEARANCE UNLESS OTHERWISE SPECIFIED.
3. "Z" DIMENSION FOR NOZZLES IS MEASURED FROM CENTERLINE OF NOZZLE FACE.
4. DELETED
5. DELETED
6. DELETED
7. REVISED/ADDED/DELETED:
   a) EXTENSIVE REVISION. CHANGES ARE NOT INDICATED BY CLOUDING.
   b) INCORPORATED 24590-PTF-MVN-HLP-00003.
8. PULSE JET MIXER:
   a) MINIMUM PLATE THICKNESS IS 7/16". SELLER TO DESIGN.
   b) ALL WELDS SHALL BE FULL PENETRATION AND SMOOTH.
   c) SELLER SHALL DESIGN SUPPORTS. PULSE JET MIXERS SHALL NOT BE SUPPORTED FROM THE PARENT VESSEL BOTTOM HEAD.
   d) DESIGN TEMPERATURE IS THE SAME AS THE PARENT VESSEL DESIGN PRESSURE AND IS SHOWN IN THE MECHANICAL DATA SHEET.
   e) DELETED
   f) NON-DESTRUCTIVE EXAMINATION SHALL BE AS SPECIFIED FOR THE VESSEL COMPONENT QUALITY LEVEL INDICATED.
9. PREPARE NOZZLE CONNECTIONS PER 24590-WTP-PW-P30T-00001 EXCEPT LEAVE SQUARE NOZZLES N29 & N30.
10. DELETED
11. NOZZLES ARE READ FROM THE CENTER OUTWARD.
12. ALL WELDS OF THE PULSE JET MIXER CLUSTER SHALL BE FULL PENETRATION, ULTRASONICALLY TESTED AND DYE-PENETRANT TESTED AS A MINIMUM.
    ALL FULL PENETRATION WELDS OF SUPPORT MEMBERS SHALL BE ULTRASONICALLY TESTED AND DYE PENETRANT TESTED. IF FILLET WELDS ARE PERMITTED BY THE BUYER AND ARE NOT READILY ULTRASONICALLY TESTED, THEY MAY BE DYE-PENETRANT TESTED WITH APPROVAL FROM THE BUYER.
13. THE PULSE JET MIXER CLUSTER SHALL BE DESIGNED FOR THE EXTERNAL PRESSURE OF THE PARENT VESSEL STATIC HEAD. THE PJM CLUSTER FILL SHALL NOT BE CONSIDERED AS SUPPORT FOR EXTERNAL PRESSURE.
14. DELETED
15. PJM STELLITE CONE TECH NOTES:
    a) STELLITE LINER SHALL BE ENCASED WITH A STAINLESS STEEL SHROUD (SAME MATERIAL AS PJM'S) WITH A GAP LARGE ENOUGH TO FILL WITH CERAMIC GROUT (AREMCO CERAMACAST 646-N ZIRCONIUM OXIDE OR EQUAL).
    b) NO SHARP CORNERS ARE ALLOWED. ALL INTERIOR AND EXTERIOR EDGES SHALL BE PROVIDED WITH A RADIUS.
    c) STELLITE SHALL PROJECT 1/4" (+,- 1/16") PAST THE STAINLESS STEEL SHROUD.
    d) NO WELDING OR GRINDING TO THE STELLITE MATERIAL IS ALLOWED.
    e) ALL WELDS TO STAINLESS STEEL SHROUD REQUIRE VOLUMETRIC EXAMINATION.
    f) AFTER ASSEMBLY AND GROUTING OF THE PJM STELLITE CONE ASSEMBLIES WITH STAINLESS STEEL SHROUD IS COMPLETE, 100% RADIOGRAPHY OF ONE COMPLETED PJM ASSEMBLY PER VESSEL IS REQUIRED PER ASME SECTION V ARTICLE 2 FOR VALIDATING GROUT POUR CONSISTENCY. ONLY THE STRAIGHT PORTIONS OF THE ASSEMBLY SHALL MEET THE REQUIREMENTS OF ARTICLE 2. DUE TO GEOMETRY THE AREA ADJACENT TO THE GROUT FILL FITTINGS, ELBOWS, AND CONE WILL BE CONSIDERED INFORMATIONAL AND ARE EXEMPT FROM MEETING THE REQUIREMENTS OF T-270 AND T-280 OF ASME SECTION V ARTICLE 2.
16. CONTENTS OF THIS DOCUMENT ARE DANGEROUS WASTE PERMIT AFFECTING.
17. REVISED/ADDED/DELETED:
    a) INCORPORATED THE FOLLOWING DOCUMENTS:
       24590-PTF-MVN-HLP-00010.
       24590-PTF-MVN-HLP-00018.
       24590-PTF-MVN-HLP-00031.
       24590-PTF-MVN-HLP-00044, EXCEPT ADR REFERENCE.
       24590-PTF-MVN-HLP-00047
       24590-PTF-MVN-HLP-00048, INCORPORATION MODIFIED AND IS NO LONGER REQUIRED PER RESPONISBILE ENGINEER
       24590-PTF-MVN-HLP-00049
       24590-WTP-M6N-M80T-00003
       24590-QL-MRB-MVA0-00001-T0006
       24590-QL-MRB-MVA0-00001-T0007
    b) DELETED SECTIONS J-J AND SECTION F-F.
    c) ADDED SECTION M-M
    d) REVISED REFERENCE DRAWINGS LIST AND REMOVED REV COLUMN.
    e) REMOVED VESSEL COMPONENT QUALITY LEVELS CHART.
    f) ADDED REFERENCE DRAWING NUMBER ON PLAN VIEW.
    g) INCORPORATED 24590-WTP-M6N-M80T-00002 & 24590-PTF-MVN-HLP-00047 WHICH IS NO LONGER REQUIRED PER 24590-WTP-RPT-ENS-07-001, REV 23 AS LEAD DOCUMENT REPORT IS CANCELLED.
    h) REVISED NOZZLES N04,N04A,B,C, N08, N08A,B,C, N09, N09A,B & C DETAILS IN NOZZLE SCHEDULE.
    i) ADDED RADIAL DIMENSION FOR NOZZLES N80 AND N81 ON PLAN VIEW.
    j) DELETED NOTES 10 AND 14.

NOZZLE	SIZE	SCHED/WALL	SERVICE/REMARKS	"Z" DIM	REF DWG - DET	CONN. PIPE/TUBE SIZE
N01	24" ID	0.5"	MANWAY	32'-10"	24590-WTP-MV-M59T-00017 DET 1	CAPPED
N02	8"	80S	OVERFLOW	28'-0"	24590-WTP-MV-M59T-00016001 DET 1	8"-40S
N04	6"	80S	INSTRUMENTATION	33'-3"	24590-PTF-MV-HLP-00013, DET 14	N/A
N04A	1"	160S	BALANCE	SEE DET	24590-PTF-MV-HLP-00013, DET 14	1"- 40S
N04B	1"	160S	DENSITY	SEE DET	24590-PTF-MV-HLP-00013, DET 14	1"- 40S
N04C	1"	160S	LEVEL	33'-11"	24590-PTF-MV-HLP-00013, DET 14	1"- 40S
N05	10"	80S	VENT	34'-5"	24590-WTP-MV-M59T-00016001 DET 1	10"-10S
N06	4"	80S	SPARE	34'-4"	24590-WTP-MV-M59T-00016001 DET 2	CAPPED
N07	2"OD x 1"	160S	TEMPERATURE	33'-1"	24590-WTP-MV-M59T-00007 DET 1	3/4"-10S
N08	6"	80S	INSTRUMENTATION	33'-3"	24590-PTF-MV-HLP-00013, DET 14	N/A
N08A	1"	160S	BALANCE	SEE DET	24590-PTF-MV-HLP-00013, DET 14	1"- 40S
N08B	1"	160S	DENSITY	SEE DET	24590-PTF-MV-HLP-00013, DET 14	1"- 40S
N08C	1"	160S	LEVEL	33'-11"	24590-PTF-MV-HLP-00013, DET 14	1"- 40S
N09	6"	80S	INSTRUMENTATION	33'-3"	24590-PTF-MV-HLP-00013, DET 14	N/A
N09A	1"	160S	BALANCE	SEE DET	24590-PTF-MV-HLP-00013, DET 14	1"- 40S
N09B	1"	160S	DENSITY	SEE DET	24590-PTF-MV-HLP-00013, DET 14	1"- 40S
N09C	1"	160S	LEVEL	33'-11"	24590-PTF-MV-HLP-00013, DET 14	1"- 40S
N10	2"	160S	INLET TO WASH RING	31'-9"	24590-WTP-MV-M59T-00016001 DET 3	2"-40S
N11	2"	160S	INLET TO WASH RING	31'-9"	24590-WTP-MV-M59T-00016001 DET 3	2"-40S
N12	2"	160S	INLET TO WASH RING	31'-9"	24590-WTP-MV-M59T-00016001 DET 3	2"-40S
N13	2"	160S	INLET TO WASH RING	31'-9"	24590-WTP-MV-M59T-00016001 DET 3	2"-40S
N14	2"	160S	AIR/VACUUM TO HLP-PJM-00076	34'-3"	24590-WTP-MV-M59T-00016001 DET 3	2"-40S
N15	2"	160S	AIR/VACUUM TO HLP-PJM-00077	33'-8"	24590-WTP-MV-M59T-00016001 DET 3	2"-40S
N16	2"	160S	AIR/VACUUM TO HLP-PJM-00078	33'-8"	24590-WTP-MV-M59T-00016001 DET 3	2"-40S
N17	2"	160S	AIR/VACUUM TO HLP-PJM-00079	33'-8"	24590-WTP-MV-M59T-00016001 DET 3	2"-40S
N18	2"	160S	AIR/VACUUM TO HLP-PJM-00080	33'-8"	24590-WTP-MV-M59T-00016001 DET 3	2"-40S
N19	2"	160S	AIR/VACUUM TO HLP-PJM-00081	33'-8"	24590-WTP-MV-M59T-00016001 DET 3	2"-40S
N20	2"	160S	AIR/VACUUM TO HLP-PJM-00082	33'-8"	24590-WTP-MV-M59T-00016001 DET 3	2"-40S
N21	2"	160S	AIR/VACUUM TO HLP-PJM-00083	33'-8"	24590-WTP-MV-M59T-00016001 DET 3	2"-40S
N25	2"	160S	SPARE	33'-6"	24590-WTP-MV-M59T-00016001 DET 2	CAPPED -160S
N27	3"	80S	INLET	32'-6"	24590-WTP-MV-M59T-00016001 DET 2	3"-40S
N28	2"	160S	CHEMICAL ADDITION	32'-2"	24590-WTP-MV-M59T-00016001 DET 2	2"-80S
N29	6"	80S	INLET	33'-4"	24590-PTF-MV-HLP-00013 DETAIL 12	N/A
N29A	4"	80S	INLET	33'-8"	24590-PTF-MV-HLP-00013 DETAIL 12	4"-40S
N30	6"	80S	INLET	32'-4"	24590-PTF-MV-HLP-00013 DETAIL 12	N/A
N30A	4"	80S	INLET	32'-8"	24590-PTF-MV-HLP-00013 DETAIL 12	4"-40S
N31	3"	80S	SPARE	33'-8"	24590-WTP-MV-M59T-00016001 DET 2	CAPPED
N32	3"	80S	INLET	32'-2"	24590-WTP-MV-M59T-00016001 DET 2	3"-40S
N33	2"	160S	INLET	32'-6"	24590-WTP-MV-M59T-00016001 DET 2	2"-80S
N34	3"	80S	INLET	33'-2"	24590-WTP-MV-M59T-00016001 DET 2	3"-40S
N36	4"	80S	OUTLET WITH DIP PIPE (PUMP)	3'-0 1/2"	24590-WTP-MV-M59T-00016001 DET 3	4"-40S
N37	3"	80S	INLET	32'-6"	24590-WTP-MV-M59T-00016001 DET 2	3"-40S
N38	3"	80S	INLET WITH DIP PIPE	34'-5"	24590-WTP-MV-M59T-00016001 DET 3	3"-40S
N39	4"	80S	INLET TO JACKET	-5'-3"	24590-WTP-MV-M59T-00016001 DET 1	4"-40S
N40	4"	80S	OUTLET FROM JACKET	5'-5"	24590-WTP-MV-M59T-00016001 DET 1	4"-40S
N41	3"	80S	INLET AUTO SAMPLE RETURN	33'-6"	24590-WTP-MV-M59T-00016001 DET 2	3"-40S
			DELETED			
N43	2"	160S	SPARGE AIR	34'-3"	24590-WTP-MV-M59T-00016001 DET 4	1" ODX 0.083" NOM WALL
N44	2"	160S	SPARGE AIR	33'-6"	24590-WTP-MV-M59T-00016001 DET 4	1" ODX 0.083" NOM WALL
N45	2"	160S	SPARGE AIR	33'-6"	24590-WTP-MV-M59T-00016001 DET 4	1" ODX 0.083" NOM WALL
N46	2"	160S	SPARGE AIR	33'-6"	24590-WTP-MV-M59T-00016001 DET 4	1" ODX 0.083" NOM WALL
N47	2"	160S	SPARGE AIR	33'-6"	24590-WTP-MV-M59T-00016001 DET 4	1" ODX 0.083" NOM WALL
N48	2"	160S	SPARGE AIR	33'-6"	24590-WTP-MV-M59T-00016001 DET 4	1" ODX 0.083" NOM WALL
N49	2"	160S	SPARGE AIR	33'-6"	24590-WTP-MV-M59T-00016001 DET 4	1" ODX 0.083" NOM WALL
N50	2"	160S	SPARGE AIR	33'-6"	24590-WTP-MV-M59T-00016001 DET 4	1" ODX 0.083" NOM WALL
N51	2"	160S	SPARGE AIR	33'-2"	24590-WTP-MV-M59T-00016001 DET 4	1" ODX 0.083" NOM WALL
N52	2"	160S	SPARGE AIR	33'-2"	24590-WTP-MV-M59T-00016001 DET 4	1" ODX 0.083" NOM WALL
N53	2"	160S	SPARGE AIR	33'-2"	24590-WTP-MV-M59T-00016001 DET 4	1" ODX 0.083" NOM WALL
N54	2"	160S	SPARGE AIR	33'-2"	24590-WTP-MV-M59T-00016001 DET 4	1" ODX 0.083" NOM WALL
N55	2"	160S	SPARGE AIR	33'-2"	24590-WTP-MV-M59T-00016001 DET 4	1" ODX 0.083" NOM WALL
N56	2"	160S	SPARGE AIR	33'-2"	24590-WTP-MV-M59T-00016001 DET 4	1" ODX 0.083" NOM WALL
N57	2"	160S	SPARGE AIR	33'-2"	24590-WTP-MV-M59T-00016001 DET 4	1" ODX 0.083" NOM WALL
N58	2"	160S	SPARGE AIR	32'-10"	24590-WTP-MV-M59T-00016001 DET 4	1" ODX 0.083" NOM WALL
N59	2"	160S	SPARGE AIR	32'-10"	24590-WTP-MV-M59T-00016001 DET 4	1" ODX 0.083" NOM WALL
N60	2"	160S	SPARGE AIR	32'-10"	24590-WTP-MV-M59T-00016001 DET 4	1" ODX 0.083" NOM WALL
N61	2"	160S	SPARGE AIR	32'-10"	24590-WTP-MV-M59T-00016001 DET 4	1" ODX 0.083" NOM WALL
N62	2"	160S	SPARGE AIR	32'-10"	24590-WTP-MV-M59T-00016001 DET 4	1" ODX 0.083" NOM WALL
N63	2"	160S	SPARGE AIR	32'-10"	24590-WTP-MV-M59T-00016001 DET 4	1" ODX 0.083" NOM WALL
N64	2"	160S	SPARGE AIR	32'-10"	24590-WTP-MV-M59T-00016001 DET 4	1" ODX 0.083" NOM WALL
N65	2"	160S	SPARGE AIR	31'-9"	24590-WTP-MV-M59T-00016001 DET 4	1" ODX 0.083" NOM WALL
N66	2"	160S	SPARGE AIR	31'-9"	24590-WTP-MV-M59T-00016001 DET 4	1" ODX 0.083" NOM WALL
N67	2"	160S	SPARGE AIR	31'-9"	24590-WTP-MV-M59T-00016001 DET 4	1" ODX 0.083" NOM WALL
N68	2"	160S	SPARGE AIR	31'-9"	24590-WTP-MV-M59T-00016001 DET 4	1"X 0.083" NOM WALL
N69	2"	160S	SPARGE AIR	31'-9"	24590-WTP-MV-M59T-00016001 DET 4	1"X 0.083" NOM WALL
N70	2"	160S	SPARGE AIR	31'-9"	24590-WTP-MV-M59T-00016001 DET 4	1"X 0.083" NOM WALL
N71	2"	160S	SPARGE AIR	31'-9"	24590-WTP-MV-M59T-00016001 DET 4	1"X 0.083" NOM WALL
N72	2"ODX 1"	160S	SPARGE AIR	31'-9"	24590-WTP-MV-M59T-00016001 DET 7	1"X 0.083" NOM WALL
N73	2"ODX 1"	160S	SPARGE AIR	31'-9"	24590-WTP-MV-M59T-00016001 DET 7	1"X 0.083" NOM WALL
N74	2"ODX 1"	160S	SPARGE AIR	31'-9"	24590-WTP-MV-M59T-00016001 DET 7	1"X 0.083" NOM WALL
N75	2"ODX 1"	160S	SPARGE AIR	31'-9"	24590-WTP-MV-M59T-00016001 DET 7	1"X 0.083" NOM WALL
N76	2"ODX 1"	160S	SPARGE AIR	31'-9"	24590-WTP-MV-M59T-00016001 DET 7	1"X 0.083" NOM WALL
N77	2"ODX 1"	160S	SPARGE AIR	31'-9"	24590-WTP-MV-M59T-00016001 DET 7	1"X 0.083" NOM WALL
N78	2"ODX 1"	160S	SPARGE AIR	31'-9"	24590-WTP-MV-M59T-00016001 DET 7	1"X 0.083" NOM WALL
			DELETED			
N80	8"	80S	CAMERA PORT	31'-11"	24590-PTF-MV-HLP-00013, DET 13	8"-40S
N81	8"	80S	CAMERA PORT	33'-11"	24590-PTF-MV-HLP-00013, DET 13	8"-40S

THIS DRAWING TO BE READ IN CONJUNCTION WITH MECHANICAL SYSTEMS DATA SHEET 24590-PTF-MVD-HLP-00009

REFERENCE DRAWINGS

DWG NO	TITLE
24590-PTF-MV-HLP-00012	EQUIPMENT ASSEMBLY HLW FEED BLEND VESSEL HLP-VSL-00029
24590-PTF-MV-HLP-00013	SECTIONS AND DETAILS HLW FEED BLEND VESSEL HLP-VSL-00028
24590-WTP-MV-M59T-00001	PRESSURE VESSEL TOLERANCES STANDARD DETAILS
	DELETED
24590-WTP-MV-M59T-00007	THERMOWELL CONNECTION STANDARD DETAILS
24590-WTP-MV-M59T-00009	LIFTING LUGS STANDARD DETAILS
24590-WTP-MV-M59T-00011	WASH RINGS STANDARD DETAILS
24590-WTP-MV-M59T-00016001	VESSEL CONNECTIONS STANDARD DETAILS SHT 1 OF 3
24590-WTP-MV-M59T-00016003	VESSEL CONNECTIONS STANDARD DETAILS SHT 3 OF 3
24590-WTP-MV-M59T-00017	VESSEL INSPECTION MANWAY STANDARD DETAILS
24590-WTP-PW-P30T-00001	WTP END PREP DETAIL FOR FIELD BUTT WELDS
24590-PTF-M6-HLP-00003001	P&ID-PTF HLW LAG STORAGE & FEED BLENDING PROCESS SYSTEM VESSEL HLP-VSL-00028
24590-PTF-M6-HLP-00006007	P&ID-PTF HLW LAG STORAGE & FEED BLENDING PROCESS SYSTEM VESSEL PJM HLP-VSL-00027B/28
24590-PTF-M6-HLP-000022001	P&ID-PTF HLW LAG STORAGE & FEED BLENDING PROCESS SYSTEM SPARGER RACK PSA-RK-00054
24590-PTF-M6-HLP-000022002	P&ID-PTF HLW LAG STORAGE & FEED BLENDING PROCESS SYSTEM SPARGER RACK PSA-RK-00054
24590-PTF-M6-HLP-000023001	P&ID-PTF HLW LAG STORAGE & FEED BLENDING PROCESS SYSTEM SPARGER RACK PSA-RK-00054
24590-PTF-M6-HLP-000023002	P&ID-PTF HLW LAG STORAGE & FEED BLENDING PROCESS SYSTEM SPARGER RACK PSA-RK-00054
24590-PTF-M6-HLP-000024001	P&ID-PTF HLW LAG STORAGE & FEED BLENDING PROCESS SYSTEM SPARGER RACK PSA-RK-00054
24590-PTF-M6-HLP-000024002	P&ID-PTF HLW LAG STORAGE & FEED BLENDING PROCESS SYSTEM SPARGER RACK PSA-RK-00054
24590-PTF-M6-PWD-00033	P&ID-PTF PLANT WASH & DISPOSAL UTILITY SERVICES PLANT WASH RACK

Please note that source, special nuclear, and byproduct materials, as defined in the Atomic Energy Act of 1954 (AEA) are regulated at the U. S. Department of Energy (DOE) facilities exclusively by DOE acting pursuant to its AEA authority. DOE asserts that pursuant to AEA, it has sole and exclusive responsibility and authority to regulate source, special nuclear, and byproduct materials at DOE-owned nuclear facilities. Information contained herein on radionuclides is provided for process description purposes only.

REVISION HISTORY

REV	DESCRIPTION	ORG	CHKD	RVWD	APVD	DATE
3	REVISED PER NOTE 17	[illegible]	[illegible]	[illegible]	[illegible]	2/24/11
2	REVISED PER NOTE 7	RDS/RJR	YH/CS	JJ	MH	4/29/04
1	REVISED AS MARKED, SEE NOTE 6	SS/RR	PA/CS	RES	MH	7/11/03
0	ISSUED FOR PURCHASE	SS/RR	PA/CS	N/A	SK	10/3/02

Q

ISSUED BY RPP-WTP PDC
ISSUE STAMP

PROJECT No.	24590	
SITE	HANFORD	
AREA	200E	
BUILDING No.	10	
	BY	DATE
ORIGINATOR	S. SUHARTO / R. RIDER	9/30/02
CHECKER	P. AVIGUETERO / C. SLATER	10/03/02
APPROVER	SUZANNE KIRK	10/03/02
REVIEWER	N/A	

CONTENT APPLICABLE TO ALARA? [X] YES [ ] NO
ADR NO. 24590-WTP-ADR-M-03-008 REV: 2
E&NS SCREENING REQUIRED [X] YES [ ] NO E&NS INITIAL IF YES

RIVER PROTECTION PROJECT
WASTE TREATMENT PLANT
2435 STEVENS CENTER PLACE
RICHLAND, WA 99354

CONTRACT No: DE-AC27-01RV14136

EQUIPMENT ASSEMBLY
HLW FEED BLEND VESSEL
HLP-VSL-00028

SCALE: NONE
24590-PTF-MV-HLP-00004
REV 3
'E' SIZE - 44x34

SCREENING IS REQUIRED FOR DRAWING TYPES IDENTIFIED IN 24590-WTP-3PS-GREG-000
COMPUTER GENERATED MANUAL DESIGN CHANGES NOT PERMITTED

FORM E_MASTER 03/2003

02/24/2011 10:57 AM

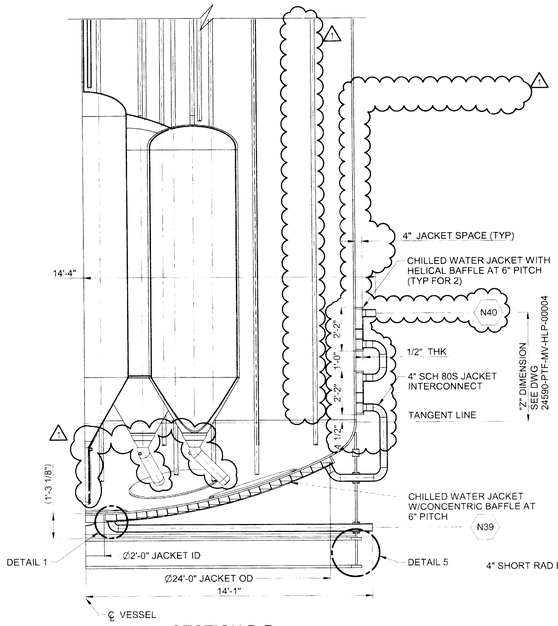

SECTION D-D
24590-PTF-MV-HLP-00004

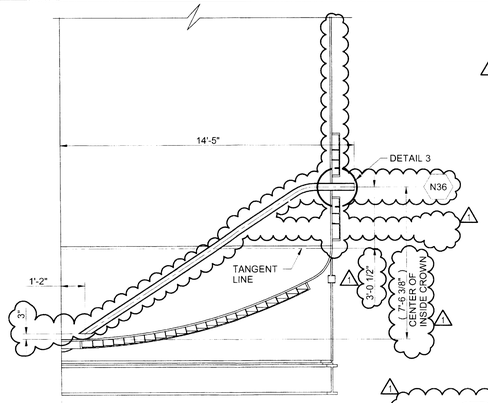

SECTION E-E
24590-PTF-MV-HLP-00004

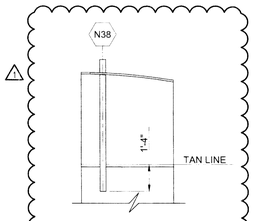

SECTION M-M
24590-PTF-MV-HLP-00004

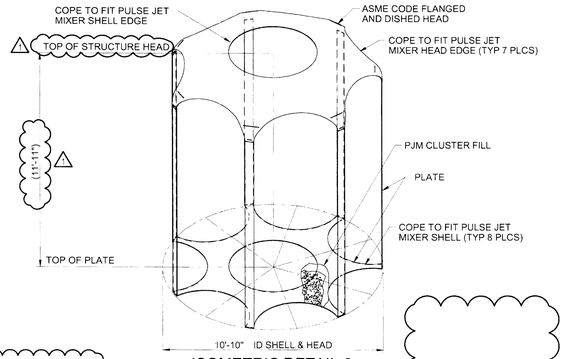

ISOMETRIC DETAIL 6
PULSE JET MIXER CLUSTER SUPPORT STRUCTURE
24590-PTF-MV-HLP-00012

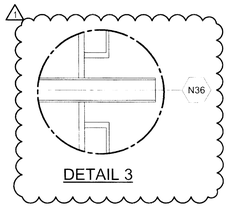

DETAIL 3

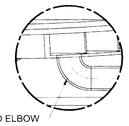

4" SHORT RAD ELBOW

DETAIL 1

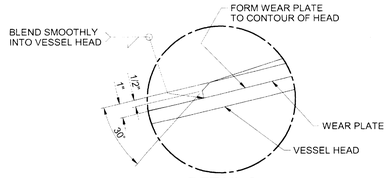

DETAIL 2

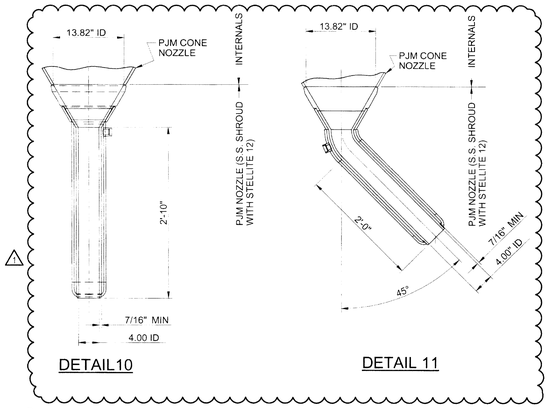

DETAIL10 DETAIL 11

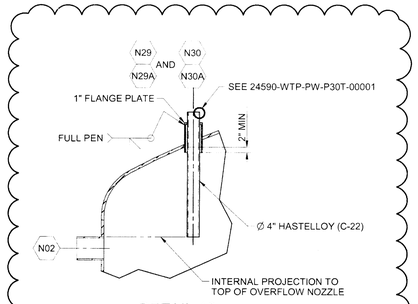

DETAIL 12
24590-PTF-MV-HLP-00004
SEE PLAN VIEW FOR TRUE ORIENTATIONS

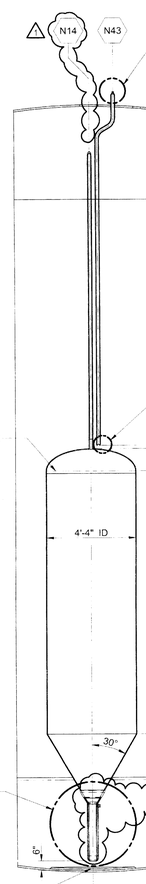

SECTION G-G
24590-PTF-MV-HLP-00004

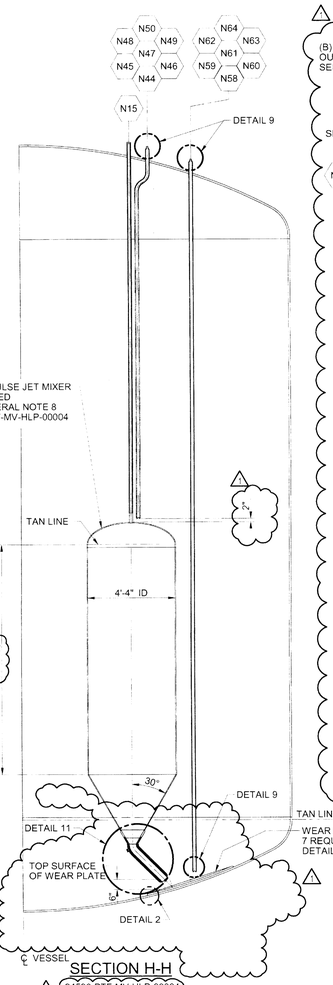

SECTION H-H
24590-PTF-MV-HLP-00004

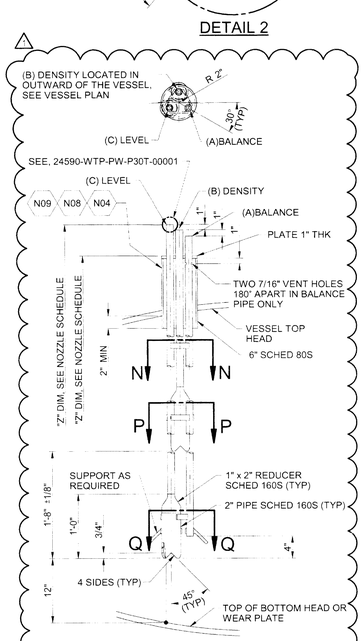

DETAIL 14
24590-PTF-MV-HLP-00004

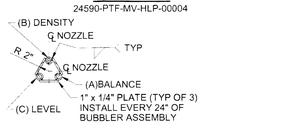

SECTION N-N

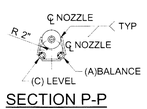

SECTION P-P

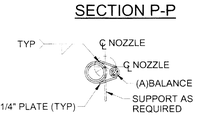

SECTIONQ-Q

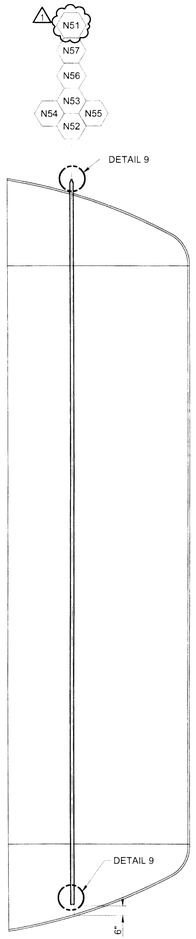

SECTION K-K
24590-PTF-MV-HLP-00004

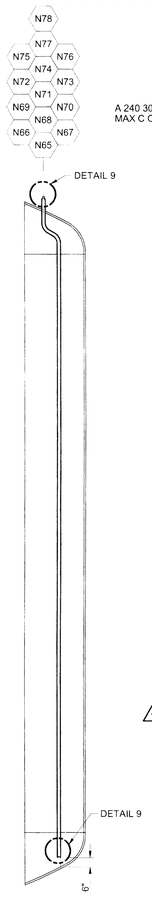

SECTION L-L
24590-PTF-MV-HLP-00004

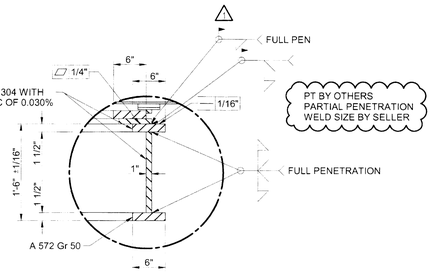

PT BY OTHERS PARTIAL PENETRATION WELD SIZE BY SELLER

DETAIL 5
RING BEAM

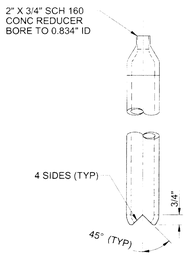

DETAIL 9
SPARGE ENDS

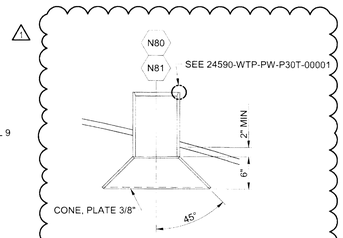

DETAIL 13
24590-PTF-MV-HLP-00004

GENERAL NOTES:

1. FOR GENERAL NOTES, SEE 24590-PTF-MV-HLP-00004.
2. CONTENTS OF THIS DOCUMENT ARE DANGEROUS WASTE PERMIT AFFECTING.
3. REVISED/ADDED/DELETED.
   a) INCORPORATED THE FOLLOWING DOCUMENTS:
      24590-PTF-MVN-HLP-00017.
      24590-PTF-MVN-HLP-00025.
      24590-PTF-MVN-HLP-00033, DEVIATED FROM "CENTER OF INSIDE CROWN DIMENSION"
      ~~24590-MVN-HLP-00049~~ 24590-PTF-MVN-HLP-00049 Rev. 2
      24590-QL-MRB-MVA0-00001-T0007
   b) ADDED SECTIONS M-M, N-N, P-P AND Q-Q.
   c) ADDED DETAILS 12,13 AND 14.
   d) REVISED REFERENCE DIMENSIONS ON DETAIL 6.
   e) REVISED REFERENCE DIMENSIONS ON SECTIONS G-G & H-H.
   f) REVISED DETAILS 3, 5, 10 & 11.
   g) DELETED DETAILS 4, 7, 8, SECTIONS F-F AND J-J.
   h) ADDED NOZZLE 14 CALLOUT ON PJM AIR/VAC NOZZLE ON SECTION G-G
   i) ADDED TOP TO SURFACE OF WEARPLATE ON SECTION G-G.
   j) ADDED REFERENCE DRAWING NUMBER TO ALL SECTION VIEWS & DETAIL.
   k) ADDED REFERENCE DRAWINGS TABLE.
   l) ADDED "TOP OF STRUCTURE HEAD" ON DETAIL 6.
   m) INCORPORATED 24590-WTP-MEN-M80T-00002 WHICH IS NO LONGER REQUIRED PER 24590-WTP-RPT-ENS-07-001, REV 23 AS LEAD DOCUMENT REPORT IS CANCELLED.

PLEASE NOTE THAT SOURCE, SPECIAL NUCLEAR AND BYPRODUCT MATERIALS, AS DEFINED IN THE ATOMIC ENERGY ACT OF 1954 (AEA) ARE REGULATED AT THE U.S. DEPARTMENT OF ENERGY (DOE) FACILITIES EXCLUSIVELY BY DOE ACTING PURSUANT TO ITS AEA AUTHORITY. DOE ASSERTS, THAT PURSUANT TO THE AEA, IT HAS SOLE AND EXCLUSIVE RESPONSIBILITY AND AUTHORITY TO REGULATE SOURCE, SPECIAL NUCLEAR, AND BYPRODUCT MATERIALS AT DOE-OWNED NUCLEAR FACILITIES. INFORMATION CONTAINED HEREIN ON RADIONUCLIDES IS PROVIDED FOR PROCESS DESCRIPTION PURPOSES ONLY.

Please note that source, special nuclear, and byproduct materials, as defined in the Atomic Energy Act of 1954 (AEA) are regulated at the U. S. Department of Energy (DOE) facilities exclusively by DOE acting pursuant to its AEA authority. DOE asserts that pursuant to AEA, it has sole and exclusive responsibility and authority to regulate source, special nuclear, and byproduct materials at DOE-owned nuclear facilities. Information contained herein on radionuclides is provided for process description purposes only.

REFERENCE DRAWINGS

DWG NO	TITLE
24590-PTF-MV-HLP-00004	EQUIPMENT ASSEMBLY HLW FEED BLEND VESSEL HLP-VSL-00028
24590-PTF-MV-HLP-00012	EQUIPMENT ASSEMBLY HLW FEED BLEND VESSEL HLP-VSL-00028
24590-WTP-PW-P30T-00001	WTP WELD PREP DETAIL FOR FIELD BUTT WELD

REVISION HISTORY

REV	DESCRIPTION	ORG	CHKD	RVWD	APVD	DATE
1	REVISED PER NOTE 3	RWS	CSL	JJ	JJ	2/24/11
0	ISSUED FOR PURCHASE	RDS/RJR	YHCS	JJ	MH	4/29/04

Q

PROJECT No.	24590	
SITE	HANFORD	
AREA	200E	
BUILDING No.	10	
	BY	DATE
ORIGINATOR	R. SIMMONS/R. RIDER	4/29/04
CHECKER	C. SLATER/Y. HOVANSKI	4/29/04
APPROVER	M. HOFFMANN	4/29/04
REVIEWER	J. JULYK	4/29/04

CONTENT APPLICABLE TO ALARA? [X] YES [ ] NO
ADR NO. 24590-WTP-ADR-M-03-008 REV. 2
ESHS SCREENING REQ'RED [X] YES [ ] NO ESHS INITIAL IF YES

BECHTEL

RIVER PROTECTION PROJECT
WASTE TREATMENT PLANT
2435 STEVENS CENTER PLACE
RICHLAND, WA 99354

CONTRACT No. DE-AC27-01RV14136

SECTIONS AND DETAILS HLW FEED BLEND VESSEL HLP-VSL-00028

SCALE: NONE
24590-PTF-MV-HLP-00013
REV 1

"E" SIZE - 44x34
COMPUTER GENERATED
MANUAL DESIGN CHANGES NOT PERMITTED

SCREENING IS REQUIRED FOR DRAWING THIS DOCUMENT FED IN 24590-WTP-DRF-ENS-002

02/24/2011 10:58 AM

FORM R_MASTER 01/2003

Quarter Ending 09/30/11 24590-PTF-PCN-ENV-10-034

Hanford Facility RCRA Permit Modification Notification Form
Part III, Operating Unit 10
Waste Treatment and Immobilization Plant

Index

Page 2 of 3: Hanford Facility RCRA Permit, Part III, Operating Unit 10, Waste Treatment and Immobilization Plant
Replace Equipment Assembly Drawing for the PTF HLW Feed Receipt Vessel (HLP-VSL-00022) in Appendix 8.6 of the Dangerous Waste Permit (DWP).

Submitted by Co-Operator:

D. M. Busche 6/7/11 Date

Reviewed by ORP Program Office:

D. L. Noyes 7/8/11 Date

Quarter Ending 09/30/11

24590-PTF-PCN-ENV-10-034

Hanford Facility RCRA Permit Modification Notification Form	
Unit: **Waste Treatment and Immobilization Plant**	Permit Part: **Part III, Operating Unit 10**

Description of Modification:

The purpose of this Class 1 prime modification is to update the Equipment Assembly drawing for the PTF HLW Feed Receipt Vessel (HLP-VSL-00022) in Appendix 8.6 of the DWP. The mechanical data sheet associated with this vessel is located in 24590-PTF-PCN-ENV-08-006.

The following drawings are being submitted to replace the drawing currently in Appendix 8.6. The increase in the number of drawings submitted results from converting the source drawing into four drawings to provide a clearer representation of the system, including additional details for internal assemblies.

Appendix 8.6			
Replace:	24590-PTF-MV-HLP-00003, Rev. 2	With:	24590-PTF-MV-HLP-00003001, Rev. 0
			24590-PTF-MV-HLP-00003002, Rev. 0
			24590-PTF-MV-HLP-00003003, Rev. 0
			24590-PTF-MV-HLP-00003004, Rev. 0

This modification requests Ecology approval and incorporation into the permit the specific changes to the above DWP document. Conversion from one to four drawings represents a major revision and no revision clouds are required. Revisions are the result of ongoing design (changes from vendor preliminary data to vendor detailed design), seismic and mixing analyses, and general criteria from design verification review. The following identifies the significant changes that have been incorporated:

Equipment Assembly Drawings (24590-PTF-MV-HLP-00003001, 24590-PTF-MV-HLP-00003002, 24590-PTF-MV-HLP-00003003, and 24590-PTF-MV-HLP-00003004)

- Modified, deleted, and added notes, holds, and references
- Added sheets (2 of 4, 3 of 4, and 4 of 4) with mixing assessment equipment changes plan, elevation, section, and detail views
- Added six PJMs per M-3 Mixing Assessment document
- Added nozzles; revised nozzles

This modification requests Ecology approval and incorporation of the following outstanding change document(s) into the permit. Although not yet incorporated into the revised documents included in this PCN, the listed outstanding change document(s) are intended to be incorporated into the permit:

No outstanding change documents.

Quarter Ending 09/30/11 24590-PTF-PCN-ENV-10-034

WAC 173-303-830 Modification Class:	Class 1	Class [1]1	Class 2	Class 3
Please mark the Modification Class:		X		

Enter relevant WAC 173-303-830, Appendix I Modification citation number: NA

Enter wording of WAC 173-303-830, Appendix I Modification citation:

In accordance with WAC 173-303-830(4)(d)(i), this modification notification is requested to be reviewed and approved as a Class [1]1 modification. WAC 173-303-830(4)(d)(ii)(A) states, "Class 1 modifications apply to minor changes that keep the permit current with routine changes to the facility or its operation. These changes do not substantially alter the permit conditions or reduce the capacity of the facility to protect human health or the environment. In the case of Class 1 modifications, the director may require prior approval."

Modification Approved/Concur: ☑ Yes ☐ Denied (state reason below)	Reviewed by Ecology:
Reason for denial:	J. J. Wallace for — Date: 8-10-11
	J. J. Wallace — Date

NOTE:

1. FOR NOTES, SEE 24590-PTF-MV-HLP-00003002.
2. CONTENTS OF THIS DOCUMENT ARE DANGEROUS WASTE PERMIT AFFECTING.
3. ROUND STELLITE INTERIOR EDGES MINIMUM OF 1/16" RADIUS. BREAK STAINLESS STEEL EXTERIOR EDGES.

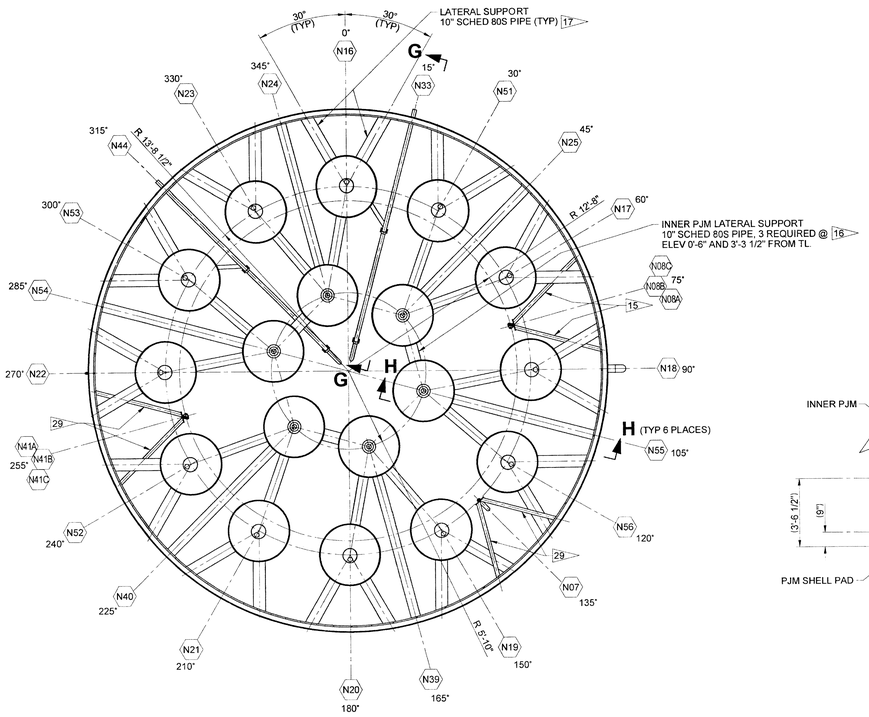

SECTION D-D
24590-PTF-MV-HLP-00003002

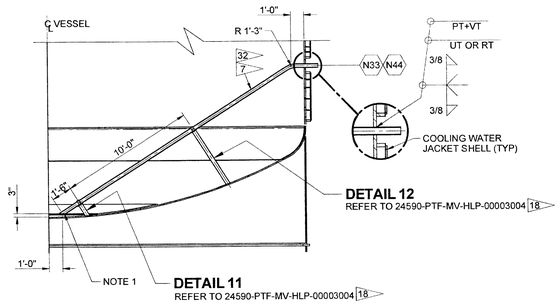

SECTION G-G

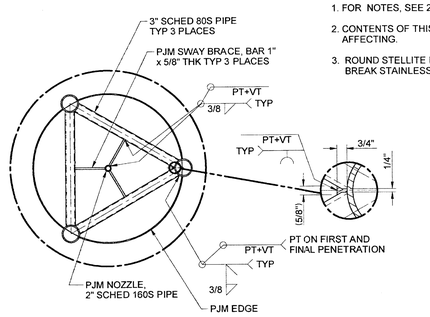

DETAIL 2
24590-PTF-MV-HLP-00003002

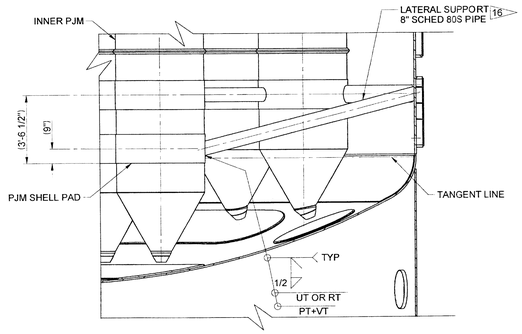

SECTION H-H

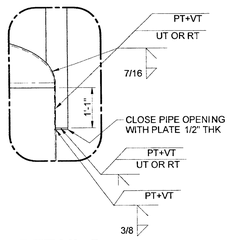

DETAIL 5

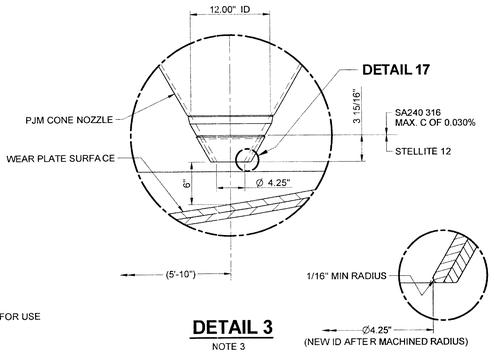

DETAIL 3
NOTE 3

DETAIL 17

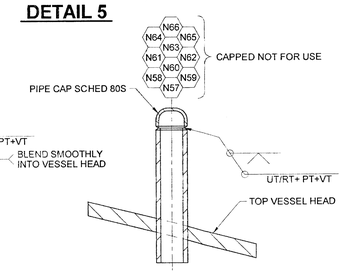

DETAIL 14

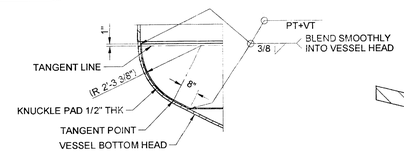

DETAIL 15
24590-PTF-MV-HLP-00003002

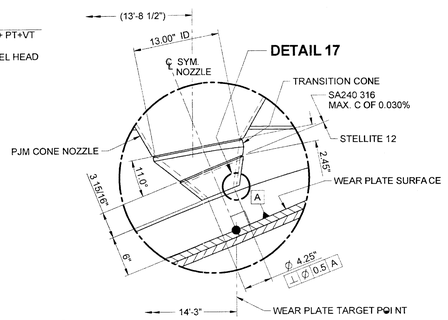

DETAIL 4
NOTE 3

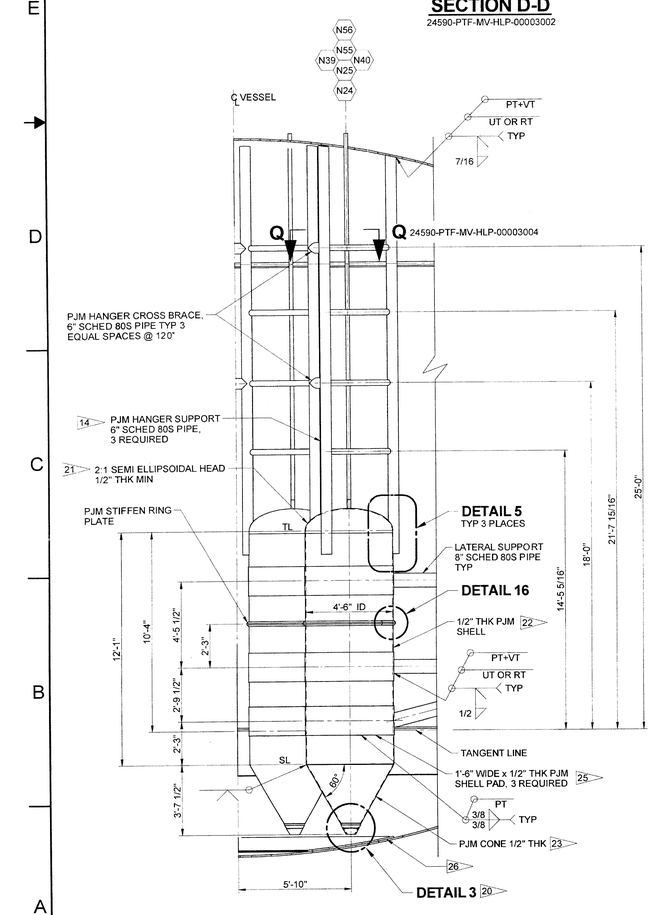

INNER PJM
SECTION E-E
24590-PTF-MV-HLP-00003002

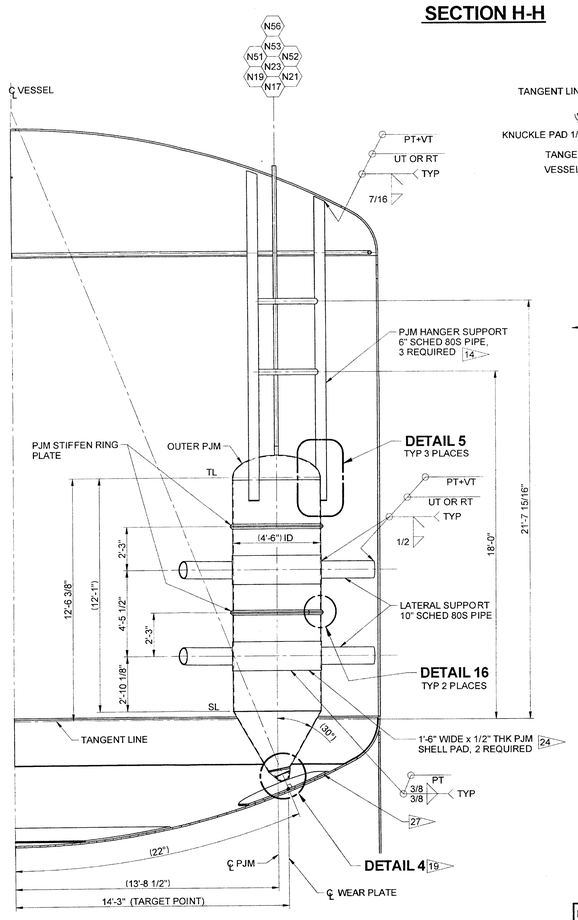

OUTER PJM
SECTION F-F
24590-PTF-MV-HLP-00003002

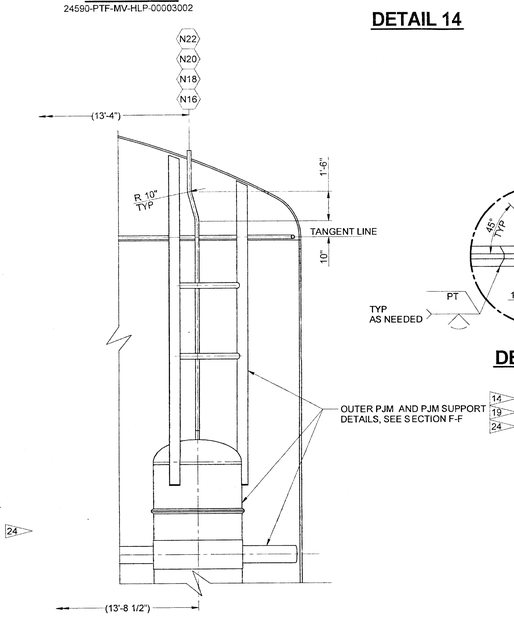

OUTER PJM
SECTION P-P
24590-PTF-MV-HLP-00003002

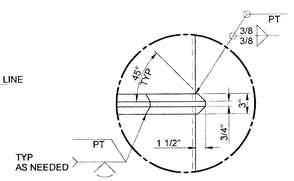

DETAIL 16

Please note that source, special nuclear, and byproduct materials, as defined in the Atomic Energy Act of 1954 (AEA) are regulated at the U. S. Department of Energy (DOE) facilities exclusively by DOE acting pursuant to its AEA authority. DOE asserts that DOE acting pursuant to the AEA authority, DOE asserts that DOE has sole and exclusive responsibility and authority to regulate source, special nuclear, and byproduct materials at DOE-owned nuclear facilities. Information contained herein on radionuclides is provided for process description purposes only.

PLEASE NOTE THAT SOURCE, SPECIAL NUCLEAR AND BYPRODUCT MATERIALS, AS DEFINED IN THE ATOMIC ENERGY ACT OF 1954 (AEA) ARE REGULATED AT THE U.S. DEPARTMENT OF ENERGY (DOE) FACILITIES EXCLUSIVELY BY DOE ACTING PURSUANT TO ITS AEA AUTHORITY. DOE ASSERTS, THAT PURSUANT TO THE AEA, IT HAS SOLE AND EXCLUSIVE RESPONSIBILITY AND AUTHORITY TO REGULATE SOURCE, SPECIAL NUCLEAR, AND BYPRODUCT MATERIALS AT DOE-OWNED NUCLEAR FACILITIES. INFORMATION CONTAINED HEREIN ON RADIONUCLIDES IS PROVIDED FOR PROCESS DESCRIPTION PURPOSES ONLY.

DRAWINGS INDEX

DWG NO	TITLE
24590-PTF-MV-HLP-00003001	EQUIPMENT ASSEMBLY HLW FEED RECEIPT VESSEL HLP-VSL-00022 SHEET 1 OF 4
24590-PTF-MV-HLP-00003002	HLP-VSL-00022 MIXING ASSESSMENT EQUIPMENT CHANGES PLAN, ELEVATION AND SECTION VIEWS SHEET 2 OF 4
24590-PTF-MV-HLP-00003003	HLP-VSL-00022 MIXING ASSESSMENT EQUIPMENT CHANGES SECTION AND DETAIL VIEWS SHEET 3 OF 4
24590-PTF-MV-HLP-00003004	HLP-VSL-00022 MIXING ASSESSMENT EQUIPMENT CHANGES SECTION AND DETAIL VIEWS SHEET 4 OF 4

REVISION HISTORY

REV	DESCRIPTION	ORG	CHKD	RVWD	APVD	DATE
0	ISSUED FOR PURCHASE, SUPERSEDES 24590-PTF-MV-HLP-00003, REV 3					3/31/11

Q QUALITY LEVEL

ISSUED BY: RPP-WTP PDC
TYP
ISSUE STAMP

PROJECT No.	24590	
SITE	HANFORD	
AREA	200E	
BUILDING No.	10	
	BY	DATE
ORIGINATOR		3/31/11
CHECKER		3/31/11
APPROVER		3/31/11
REVIEWER		3/31/11

CONTENT APPLICABLE TO ALARA? [X] YES [ ] NO
ADR NO. 24590-WTP-ADR-M-03-008 REV: 2
E&NS SCREENING REQUIRED [X] YES [ ] NO E&NS INITIAL IF YES

BECHTEL
RIVER PROTECTION PROJECT
WASTE TREATMENT PLANT
2435 STEVENS CENTER PLACE
RICHLAND, WA 99354

CONTRACT No. DE-AC27-01RV14136

HLP-VSL-00022
MIXING ASSESSMENT EQUIPMENT CHANGES SECTIONAND DETAIL VIEWS
SHEET 3 OF 4

SCALE: NONE
24590-PTF-MV-HLP-00003003
REV 0

SCREENING IS REQUIRED FOR DRAWING TYPES IDENTIFIED IN 24590-WTP-GPP-SREC-002

'E' SIZE - 44x34
COMPUTER GENERATED - MANUAL DESIGN CHANGES NOT PERMITTED

R11344567

03/30/2011 8:45 AM

FORM E_MASTER 03/2003

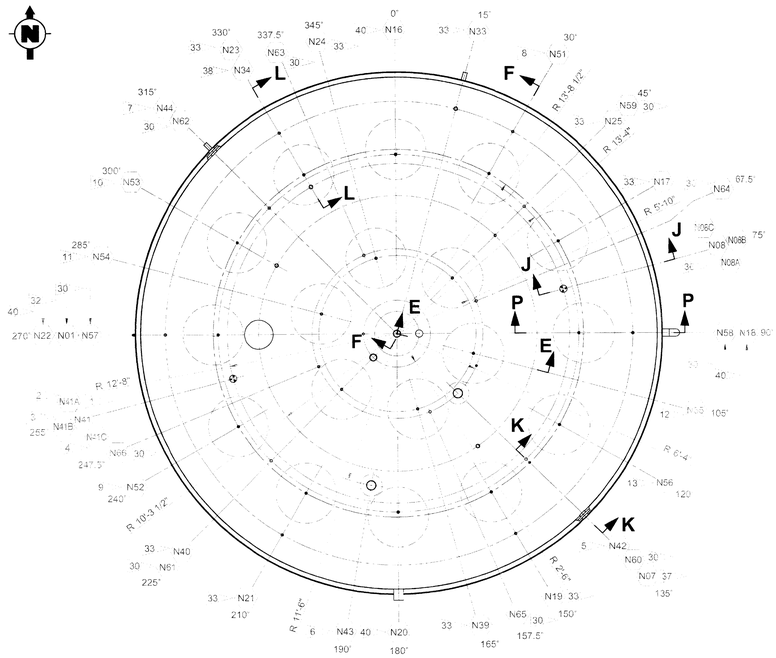

PLAN

FOR SECTIONS E-E, F-F & P-P REFER TO DWG 24590-PTF-MV-HLP-00003003 AND FOR SECTIONS J-J, L-L & K-K REFER TO DWG 24590-PTF-MV-HLP-00003004

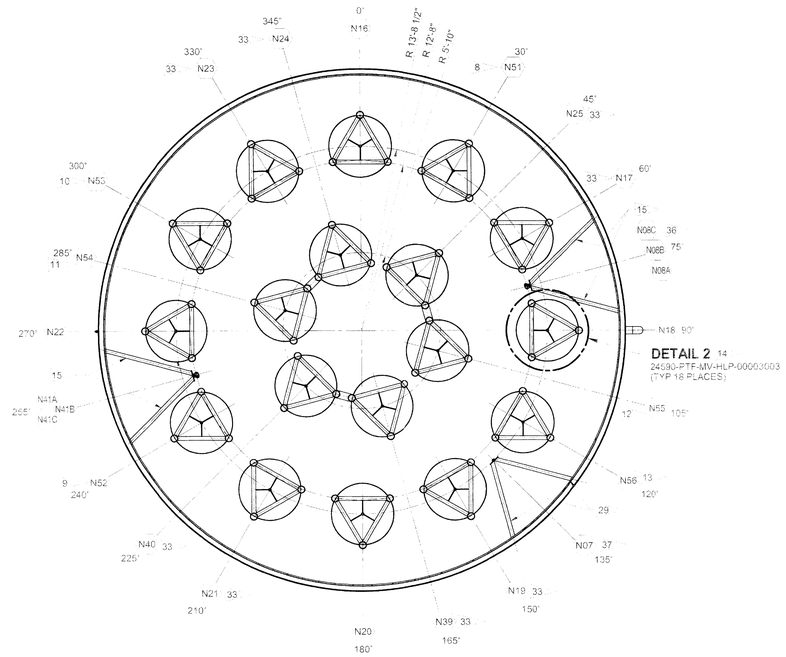

SECTION B-B

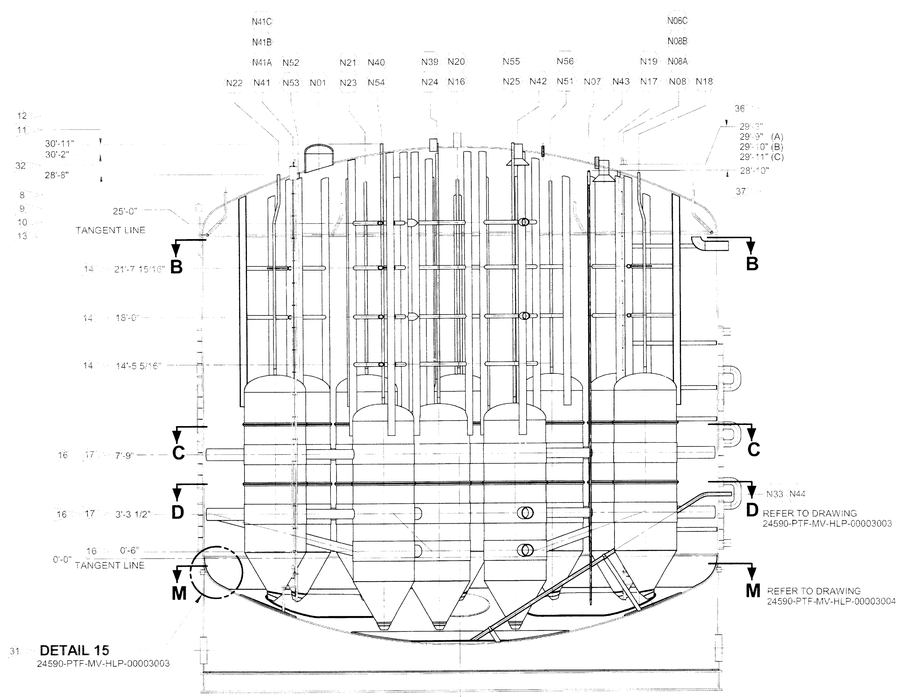

ELEVATION

FOR TRUE ORIENTATION, SEE PLAN

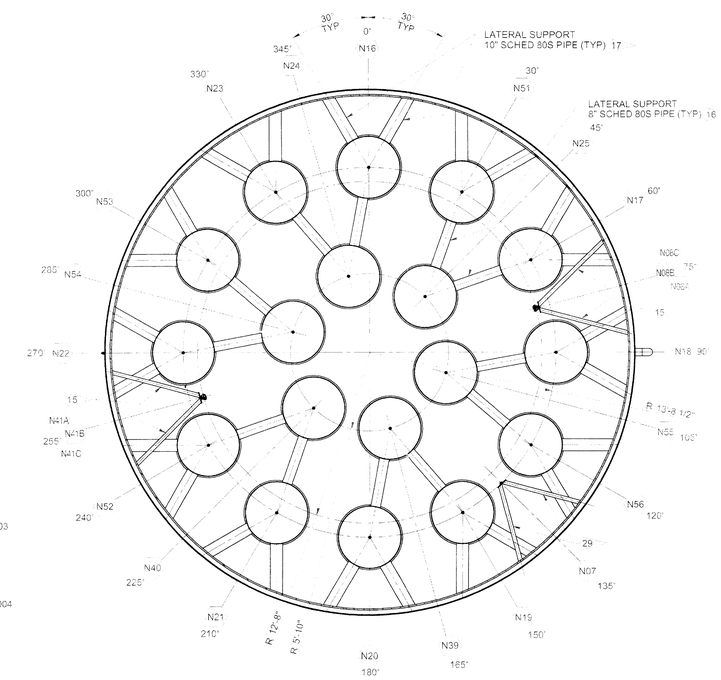

SECTION C-C

NOTES:

1. VENDOR SHALL BREAK ALL INSIDE AND OUTSIDE CORNERS AT THE SUCTION POINT OF PUMP INTERNAL PIPING AND PROVIDE MINIMUM OF 1/8" RADIUS ON ALL CORNERS.
2. ADDED/REVISED/DELETED

a) ADDED:

1 NOZZLE N41
N41 INSTRUMENATION BUBBLER ASSEMBLY
2 NOZZLE N41A
N41A INSTRUMENATION BUBBLER ASSEMBLY
3 NOZZLE N41B
N41B INSTRUMENATION BUBBLER ASSEMBLY
4 NOZZLE N41C
N41C INSTRUMENATION BUBBLER ASSEMBLY
5 NOZZLE 42
6 NOZZLE 43
7 NOZZLE 44
8 NOZZLE N51
N51 HLP-PJM-00095 ASSEMBLY
9 NOZZLE N52
N52 HLP-PJM-00096 ASSEMBLY
10 NOZZLE N53
N53 HLP-PJM-00097 ASSEMBLY
11 NOZZLE N54
N54 HLP-PJM-00098 ASSEMBLY
12 NOZZLE N55
N55 HLP-PJM-00099 ASSEMBLY
13 NOZZLE N56
N56 HLP-PJM-00100 ASSEMBLY
14 HANGER SUPPORTS FOR INNER AND OUTER PJM ASSEMBLIES
15 INSTRUMENTATION DIP TUBE SUPPORT ASSEMBLIES
16 LATERAL SUPPORTS ASSEMBLIES FOR HLP INNER PJM ASSEMBLIES
17 LATERAL SUPPORTS ASSEMBLIES FOR HLP OUTER PJM ASSEMBLIES
18 PUMP SUCTION PIPE (DIP) SUPPORTS
19 OUTER PJM CONE WITH TILTED NOZZLE SHROUD AND NOZZLE ENDS, DETAIL 4
20 INNER PJM CONE WITH NOZZLE SHROUD AND NOZZLE ENDS, DETAIL 3
21 INNER PJM HEAD
22 INNER PJM SHELL
23 INNER PJM CONE
24 PJM SHELL PAD FOR ALL PJMS
25 PJM SHELL PAD FOR ALL INNER PJMS
26 INNER WEAR PLATE
27 OUTER WEAR PLATES
28 INSTRUMENTATION DIP PIPE BOTTOM SUPPORT
29 THERMOWELL DIP TUBE ASSEMBLY SUPPORT
30 N57, N58, N59, N60, N61, N62, N63, N64, N65 AND N66 WITH CAPS
31 KNUCKLE PAD

b) REVISED:

32 N01 ORIENTATION, PITCH RADIUS AND ELEVATION
33 N17, N19, N21, N22, N24, N25, 39 AND N40 ORIENTATION
34 N33 ORIENTATION AND DIP PIPE SHAPE
35 N08 INSTRUMENATION BUBBLER RAISE TO 12"
36 N08 ORIENTATION, PITCH RADIUS AND ELEVATION
37 N07 ORIENTATION, PITCH RADIUS AND ELEVATION
38 N34 DIP PIPE LENGTH TO SHORTER
39 N10, N11, N12, N13, N14 AND N15 QUANITY OF WASH RING SUPPORTS AND THICKNESS
40 N16, N18, N20 AND N22 PJM AIR/VAC DIP PIPE BENDS

3. UT/PT SHALL BE PERFORMED ON THE PARENT PLATE, IN THE VICINITY OF THE REMOVED WELD AREA OF EROSION PAD.
4. CONTENTS OF THIS DOCUMENT ARE DANGEROUS WASTE PERMIT AFFECTING.

Please note that source, special nuclear and byproduct materials, as defined in the Atomic Energy Act of 1954 (AEA), are regulated at the U. S. Department of Energy (DOE) facilities exclusively by DOE acting pursuant to its AEA authority. DOE asserts that pursuant to AEA, it has sole and exclusive responsibility and authority to regulate source, special nuclear, and byproduct materials at DOE-owned nuclear facilities. Information contained herein on radionuclides is provided for process description purposes only.

DRAWINGS INDEX

DWG NO	TITLE
24590-PTF-MV-HLP-00003001	EQUIPMENT ASSEMBLY HLW FEED RECEIPT VESSEL HLP-VSL-00022 SHEET 1 OF 4
24590-PTF-MV-HLP-00003002	HLP-VSL-00022 MIXING ASSESSMENT EQUIPMENT CHANGES PLAN, ELEVATION AND SECTION VIEWS SHEET 2 OF 4
24590-PTF-MV-HLP-00003003	HLP-VSL-00022 MIXING ASSESSMENT EQUIPMENT CHANGES SECTION AND DETAIL VIEWS SHEET 3 OF 4
24590-PTF-MV-HLP-00003004	HLP-VSL-00022 MIXING ASSESSMENT EQUIPMENT CHANGES SECTION AND DETAIL VIEWS SHEET 4 OF 4

Q QUALITY LEVEL

REV	DESCRIPTION	ORG	CHKD	RVWD	APVD	DATE
0	ISSUED FOR PURCHASE. SUPERSEDES 24590-PTF-MV-HLP-00003, REV 3					3/31/11

REVISION HISTORY

ISSUED BY RPM-WTP PDC
ISSUE STAMP

	PROJECT No	24590
	SITE	HANFORD
	AREA	200E
	BUILDING No	10

	BY	DATE
ORIGINATOR		3/30/11
CHECKER	MA Segal	3/30/11
APPROVER		3/31/11
REVIEWER		3/31/11

CONTENT APPLICABLE TO ALARA? [X] YES [ ] NO
ADR NO 24590-WTP-ADR-M-03-008 REV 2
EMS SCREENING REQUIRED [X] YES [ ] NO EMS INITIAL IF YES

BECHTEL

RIVER PROTECTION PROJECT
WASTE TREATMENT PLANT
2435 STEVENS CENTER PLACE
RICHLAND, WA 99354

CONTRACT No: DE-AC27-01RV14136

HLP-VSL-00022 MIXING ASSESSMENT EQUIPMENT CHANGES PLAN, ELEVATION AND SECTION VIEWS SHEET 2 OF 4

SCALE NONE

24590-PTF-MV-HLP-00003002 REV 0

PLEASE NOTE THAT SOURCE, SPECIAL NUCLEAR AND BYPRODUCT MATERIALS, AS DEFINED IN THE ATOMIC ENERGY ACT OF 1954 (AEA), ARE REGULATED AT THE U.S. DEPARTMENT OF ENERGY (DOE) FACILITIES EXCLUSIVELY BY DOE ACTING PURSUANT TO ITS AEA AUTHORITY. DOE ASSERTS, THAT PURSUANT TO THE AEA, IT HAS SOLE AND EXCLUSIVE RESPONSIBILITY AND AUTHORITY TO REGULATE SOURCE, SPECIAL NUCLEAR, AND BYPRODUCT MATERIALS AT DOE-OWNED NUCLEAR FACILITIES. INFORMATION CONTAINED HEREIN ON RADIONUCLIDES IS PROVIDED FOR PROCESS DESCRIPTION PURPOSES ONLY.

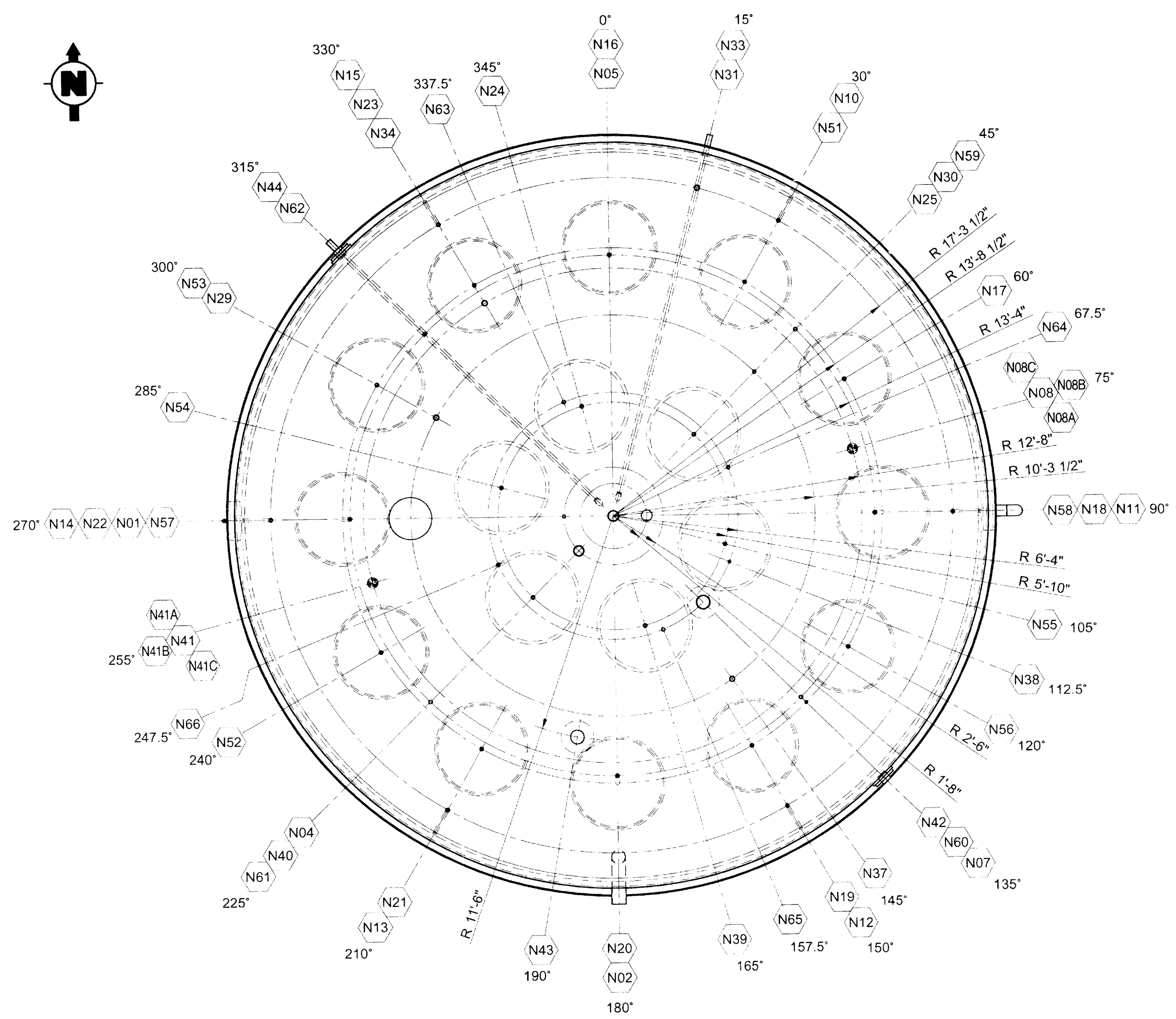

PLAN

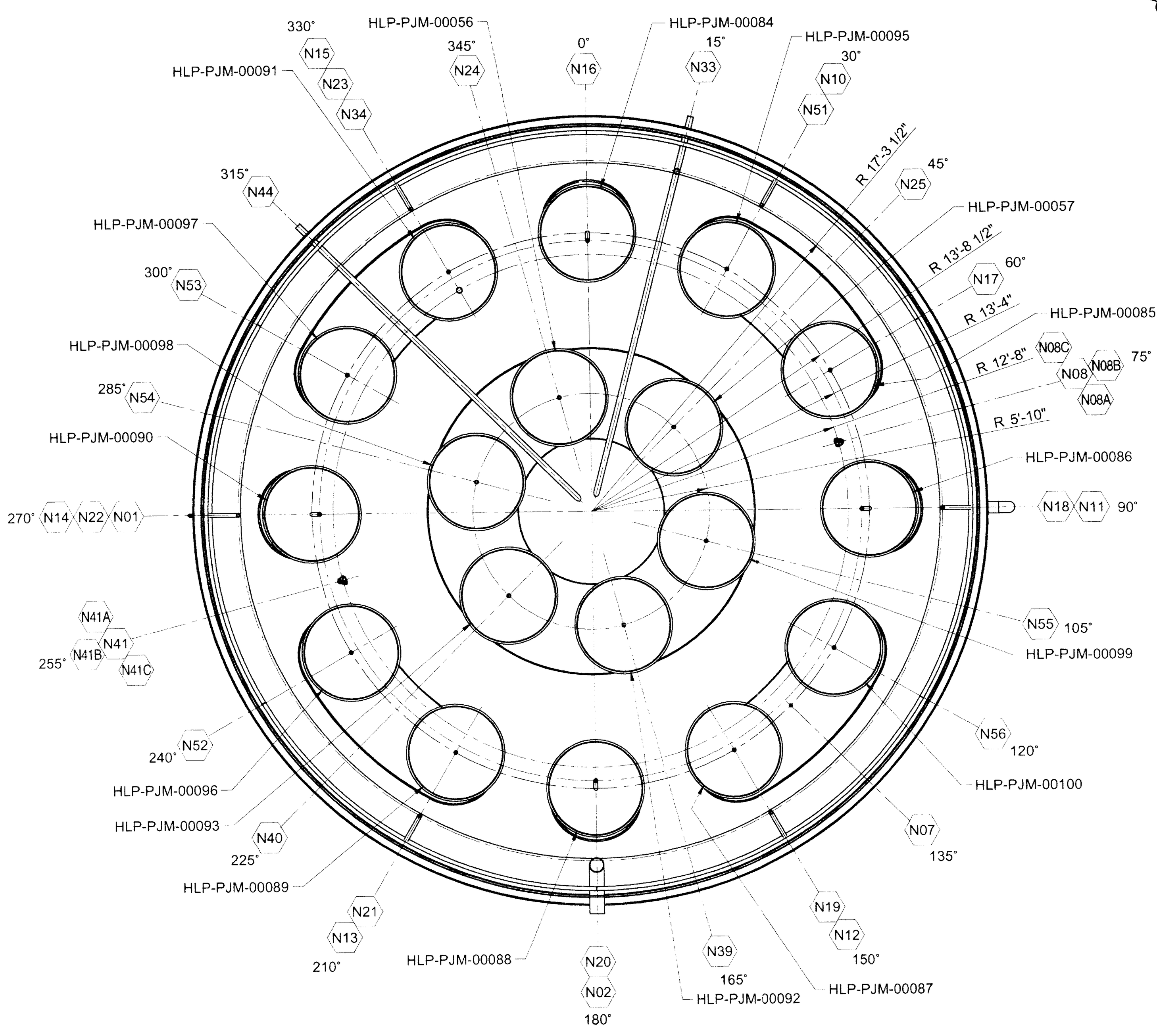

SECTION A-A

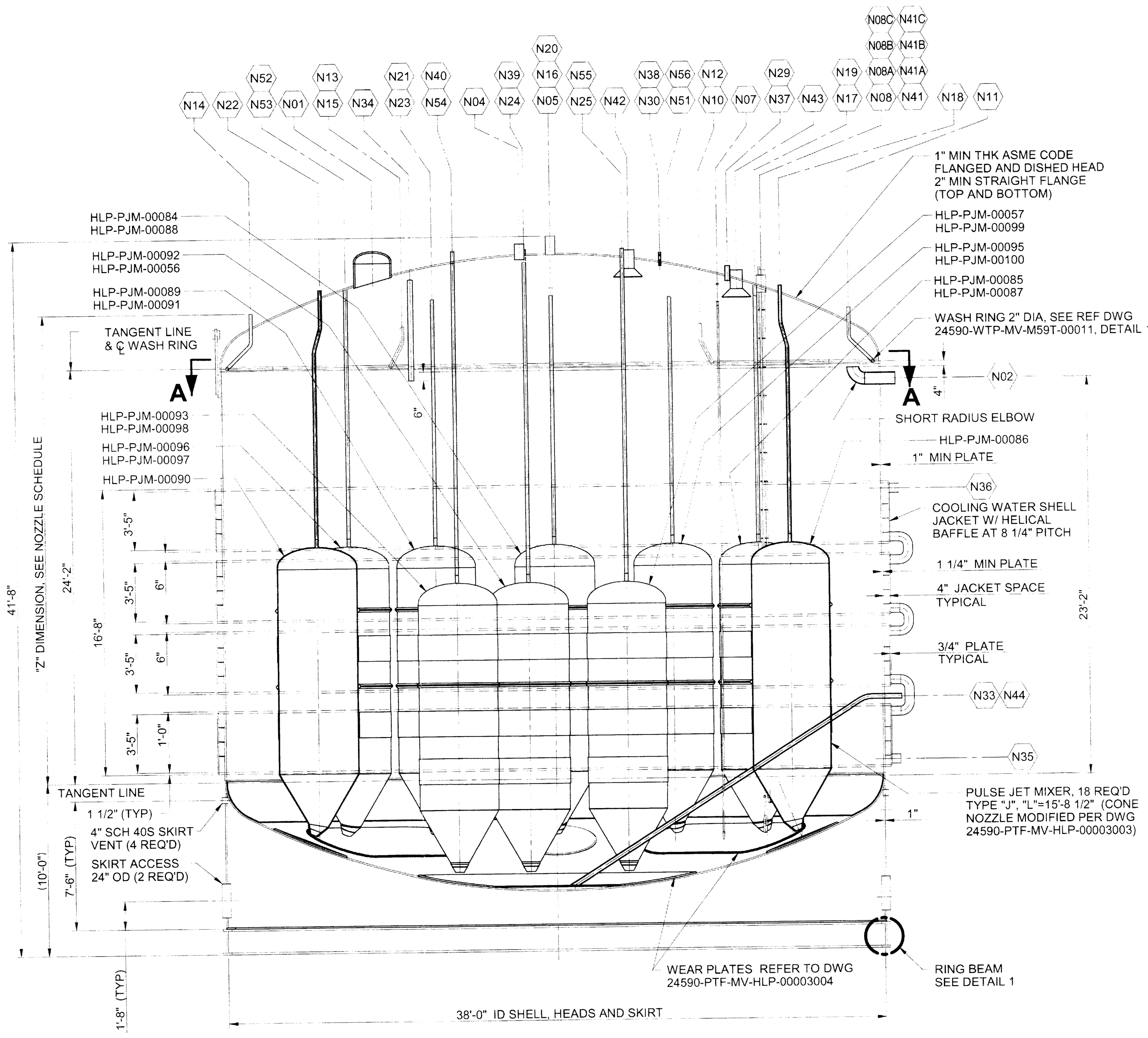

ELEVATION

FOR TRUE ORIENTATION, SEE PLAN

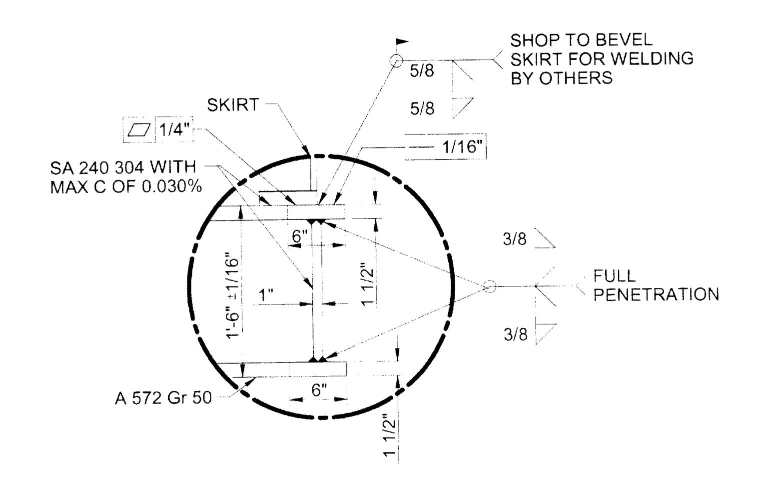

DETAIL 1

ON HOLD

NOZZLE	SIZE	SCHED/WALL	SERVICE/REMARKS	Z DIM	DET/REF	CONNECTION
N01	24"	0.625"	MANWAY	30'-2"	24590-WTP-MV-M59T-00017 DET 1	CAPPED
N02	8"	80S	OVERFLOW	23'-2"	24590-WTP-MV-M59T-00016001 DET 1	8"-40S
N03			DELETED			
N04	6"	80S	INLET AIR PURGE	31'-6"	24590-WTP-MV-M59T-00016001 DET 2	6"-10S
N05	8"	80S	VESSEL VENT	31'-6"	24590-WTP-MV-M59T-00016001 DET 1	8"-10S
N06			DELETED			
N07	2" OD x 1"	160S	TEMPERATURE	28'-10"	24590-WTP-MV-M59T-00007 ASSY 1,DET 1	3/4"-10S
N08	6"	80S	INSTRUMENTATION	29'-3"	24590-WTP-MV-M59T-00016003 DET 26	N/A
N08A	1"	160S	BALANCE	29'-9"	24590-WTP-MV-M59T-00016003 DET 26	1/2"-40S
N08B	1"	160S	DENSITY	29'-10"	24590-WTP-MV-M59T-00016003 DET 26	1/2"-40S
N08C	1"	160S	LEVEL	29'-11"	24590-WTP-MV-M59T-00016003 DET 26	1/2"-40S
N09			DELETED			
N10	2"	160S	INLET TO WASH RING	27'-3"	24590-WTP-MV-M59T-00016001 DET 3	2"-40S
N11	2"	160S	INLET TO WASH RING	27'-3"	24590-WTP-MV-M59T-00016001 DET 3	2"-40S
N12	2"	160S	INLET TO WASH RING	27'-3"	24590-WTP-MV-M59T-00016001 DET 3	2"-40S
N13	2"	160S	INLET TO WASH RING	27'-3"	24590-WTP-MV-M59T-00016001 DET 3	2"-40S
N14	2"	160S	INLET TO WASH RING	27'-3"	24590-WTP-MV-M59T-00016001 DET 3	2"-40S
N15	2"	160S	INLET TO WASH RING	27'-3"	24590-WTP-MV-M59T-00016001 DET 3	2"-40S
N16	2"	160S	AIR/VACUUM TO HLP-PJM-00084	28'-8"	24590-WTP-MV-M59T-00016001 DET 3	2"-40S
N17	2"	160S	AIR/VACUUM TO HLP-PJM-00085	28'-8"	24590-WTP-MV-M59T-00016001 DET 3	2"-40S
N18	2"	160S	AIR/VACUUM TO HLP-PJM-00086	28'-8"	24590-WTP-MV-M59T-00016001 DET 3	2"-40S
N19	2"	160S	AIR/VACUUM TO HLP-PJM-00087	28'-8"	24590-WTP-MV-M59T-00016001 DET 3	2"-40S
N20	2"	160S	AIR/VACUUM TO HLP-PJM-00088	28'-8"	24590-WTP-MV-M59T-00016001 DET 3	2"-40S
N21	2"	160S	AIR/VACUUM TO HLP-PJM-00089	28'-8"	24590-WTP-MV-M59T-00016001 DET 3	2"-40S
N22	2"	160S	AIR/VACUUM TO HLP-PJM-00090	28'-8"	24590-WTP-MV-M59T-00016001 DET 3	2"-40S
N23	2"	160S	AIR/VACUUM TO HLP-PJM-00091	28'-8"	24590-WTP-MV-M59T-00016001 DET 3	2"-40S
N24	2"	160S	AIR/VACUUM TO HLP-PJM-00056	30'-11"	24590-WTP-MV-M59T-00016001 DET 3	2"-40S
N25	2"	160S	AIR/VACUUM TO HLP-PJM-00057	30'-11"	24590-WTP-MV-M59T-00016001 DET 3	2"-40S
N26			DELETED			
N27			DELETED			
N28			DELETED			
N29	3"	80S	INLET FROM FRP SYSTEM	30'-0"	24590-WTP-MV-M59T-00016001 DET 2	3"-80S
N30	2"	160S	INLET	30'-0"	24590-WTP-MV-M59T-00016001 DET 2	2"-80S
N31	3"	80S	INLET	27'-3"	24590-WTP-MV-M59T-00016001 DET 2	3"-40S
N32			DELETED			
N33	3"	80S	OUTLET (HLP-PMP-00021)	4'-7"	24590-WTP-MV-M59T-00016001 DET 3	3"-40S
N34	3"	80S	INLET (RECIRCULATION LOOP)	29'-3"	24590-WTP-MV-M59T-00016001 DET 3	3"-40S
N35	6"	80S	INLET TO COOLING JACKET	0'-11 5/8"	24590-WTP-MV-M59T-00016001 DET 1	6"-10S
N36	6"	80S	OUTLET FROM COOLING JACKET	16'-8 1/2"	24590-WTP-MV-M59T-00016001 DET 1	6"-10S
N37	3"	80S	INLET FROM AUTOSAMPLER BACK-UP	30'-0"	24590-WTP-MV-M59T-00016001 DET 2	3"-40S
N38	1 1/2"	160S	SAFETY AIR PURGE	30'-10"	24590-WTP-MV-M59T-00016001 DET 2	1 1/2"-40S
N39	2"	160S	AIR/VACUUM TO HLP-PJM-00092	30'-11"	24590-WTP-MV-M59T-00016001 DET 3	2"-40S
N40	2"	160S	AIR/VACUUM TO HLP-PJM-00093	30'-11"	24590-WTP-MV-M59T-00016001 DET 3	2"-40S
N41	6"	80S	INSTRUMENTATION	29'-3"	24590-WTP-MV-M59T-00016003 DET 26	N/A
N41A	1"	160S	BALANCE	29'-9"	24590-WTP-MV-M59T-00016003 DET 26, SEE NOTE 8	1/2"-40S
N41B	1"	160S	DENSITY	29'-10"	24590-WTP-MV-M59T-00016003 DET 26, SEE NOTE 8	1/2"-40S
N41C	1"	160S	LEVEL	29'-11"	24590-WTP-MV-M59T-00016003 DET 26, SEE NOTE 8	1/2"-40S
N42	8"	80S	ACCESS PORT	30'-10"	24590-PTF-MV-HLP-000030004, DET 7	8"-40S
N43	8"	80S	ACCESS PORT	29'-8"	24590-PTF-MV-HLP-000030004, DET 7	8"-40S
N44	3"	80S	SPARE	4'-7"	24590-WTP-MV-M59T-00016001 DET 3, SEE NOTE 8	CAPPED
N51	2"	160S	AIR/VACUUM TO HLP-PJM-00095	28'-8"	24590-WTP-MV-M59T-00016001 DET 3, SEE NOTE 8	2"-40S
N52	2"	160S	AIR/VACUUM TO HLP-PJM-00096	28'-8"	24590-WTP-MV-M59T-00016001 DET 3, SEE NOTE 8	2"-40S
N53	2"	160S	AIR/VACUUM TO HLP-PJM-00097	28'-8"	24590-WTP-MV-M59T-00016001 DET 3, SEE NOTE 8	2"-40S
N54	2"	160S	AIR/VACUUM TO HLP-PJM-00098	30'-11"	24590-WTP-MV-M59T-00016001 DET 3, SEE NOTE 8	2"-40S
N55	2"	160S	AIR/VACUUM TO HLP-PJM-00099	30'-11"	24590-WTP-MV-M59T-00016001 DET 3, SEE NOTE 8	2"-40S
N56	2"	160S	AIR/VACUUM TO HLP-PJM-00100	28'-8"	24590-WTP-MV-M59T-00016001 DET 3, SEE NOTE 8	2"-40S
N57	2"OD x 1"	160S	CAPPED ABANDONED IN PLACE (N07)	31'-4"	24590-PTF-MV-HLP-000030003, DET 14	CAPPED
N58	6"	80S	CAPPED ABANDONED IN PLACE (N08)	31'-6"	24590-PTF-MV-HLP-000030003, DET 14	CAPPED
N59	2"	160S	CAPPED ABANDONED IN PLACE (N17)	28'-8"	24590-PTF-MV-HLP-000030003, DET 14	CAPPED
N60	2"	160S	CAPPED ABANDONED IN PLACE (N19)	28'-8"	24590-PTF-MV-HLP-000030003, DET 14	CAPPED
N61	2"	160S	CAPPED ABANDONED IN PLACE (N21)	28'-8"	24590-PTF-MV-HLP-000030003, DET 14	CAPPED
N62	2"	160S	CAPPED ABANDONED IN PLACE (N23)	28'-8"	24590-PTF-MV-HLP-000030003, DET 14	CAPPED
N63	2"	160S	CAPPED ABANDONED IN PLACE (N24)	30'-10"	24590-PTF-MV-HLP-000030003, DET 14	CAPPED
N64	2"	160S	CAPPED ABANDONED IN PLACE (N25)	30'-10"	24590-PTF-MV-HLP-000030003, DET 14	CAPPED
N65	2"	160S	CAPPED ABANDONED IN PLACE (N39)	30'-10"	24590-PTF-MV-HLP-000030003, DET 14	CAPPED
N66	2"	160S	CAPPED ABANDONED IN PLACE (N40)	30'-10"	24590-PTF-MV-HLP-000030003, DET 14	CAPPED

GENERAL NOTES:

1. DELETED
2. FOR DISTANCE OF DIP PIPES TO BOTTOM HEAD USE 2" CLEARANCE UNLESS OTHERWISE SPECIFIED.
3. ALL "Z" DIMENSIONS MEASURED FROM BTM TANGENT LINE UNLESS OTHERWISE NOTED. FOR SHELL NOZZLES, "Z" DIMENSION MEASURED FROM ℄ OF NOZZLE FACE
4. RING BEAM TO BE FABRICATED & SHIPPED AHEAD OF VESSEL TO FIELD CONSTRUCTION FOR INSTALLATION BY OTHERS
5. DELETED
6. CONTENTS OF THIS DOCUMENT ARE DANGEROUS WASTE PERMIT AFFECTING.
7. SELLER SHALL PROVIDE AND INSTALL TIE-DOWN SWIVEL LUG MOUNTING STUDS PER DRAWING 24590-WTP-MV-M59T-00003.
8. NEW NOZZLE END SHALL BE PLAIN END TO ALLOW CONSTRUCTION TO MATCH CONNECTING PIPING SCHEDULE.
9. REVISED/ADDED/DELETED:
   a) REVISION 0 MAJOR REVISION, NO REVISION CLOUDS REQUIRED.
   b) ADDED 6 PJMS PER M-3 MIXING ASSESSMENT DOCUMENT.
   c) ADDED NOZZLES N41, N41A/B/C THRU N56 PER DWG 24590-PTF-M6-HLP-00002001 & 24590-PTF-M6-HLP-00027006
   d) REVISED NOZZLES N01, N07, N08, N08A/B/C, N17, N19, N21, N23, N24, N25, N33, N34, N39 AND N40 PER DWG 24590-PTF-MV-HLP-00003002.
   e) ADDED DIMENSION ON VESSEL SKIRT VENT ON ELEVATION.
   f) REVISED NOZZLE N33, N35 AND N36 TBD TO DIMENSION IN"Z DIM" IN NOZZLE SCHEDULE.
   g) REVISED WELDING SYMBOL SIZE IN DETAIL 1.

HOLD NOTES:

1. NOZZLE N05 IS ON HOLD PENDING FINAL DESIGN OF PVP / PVV SYSTEMS.

Please note that source, special nuclear, and byproduct materials, as defined in the Atomic Energy Act of 1954 (AEA) are regulated at the U. S. Department of Energy (DOE) facilities exclusively by DOE acting pursuant to its AEA authority. DOE asserts that pursuant to AEA, it has sole and exclusive responsibility and authority to regulate source, special nuclear, and byproduct materials at DOE-owned nuclear facilities. Information contained herein on radionuclides is provided for process description purposes only.

DRAWINGS INDEX

DWG NO	TITLE
24590-PTF-MV-HLP-00003001	EQUIPMENT ASSEMBLY HLW FEED RECEIPT VESSEL HLP-VSL-00022 SHEET 1 OF 4
24590-PTF-MV-HLP-00003002	HLP-VSL-00022 MIXING ASSESSMENT EQUIPMENT CHANGES PLAN, ELEVATION AND SECTION VIEWS SHEET 2 OF 4
24590-PTF-MV-HLP-00003003	HLP-VSL-00022 MIXING ASSESSMENT EQUIPMENT CHANGES SECTION AND DETAIL VIEWS SHEET 3 OF 4
24590-PTF-MV-HLP-00003004	HLP-VSL-00022 MIXING ASSESSMENT EQUIPMENT CHANGES SECTION AND DETAIL VIEWS SHEET 4 OF 4

REFERENCE DRAWINGS

DWG NO	TITLE
24590-PTF-M6-HLP-00002001	P&ID-PTF HLP SYSTEM HLW FEED RECEIPT VESSEL HLP-VSL-00022
24590-PTF-M6-HLP-00007007	P&ID-PTF HLW LAG STORAGE AND FEED BLENDING PROCESS SYSTEM VESSEL PJM HLP-VSL-00022
24590-PTF-M6-HLP-00027006	P&ID-PTF HLW LAG STORAGE AND FEED BLENDING PROCESS SYSTEM HLP-VSL-00022 / PWD-VSL-00044 INNER PJM
24590-PTF-M6-PWD-00033	P&ID-PTF PLANT WASH & DISPOSAL UTILITY SERVICES PLANT WASH RACK
24590-WTP-MV-M59T-00001	PRESSURE VESSEL TOLERANCES STANDARD DETAILS
24590-WTP-MV-M59T-00004	PULSE JET MIXERS STANDARD DETAILS
24590-WTP-MV-M59T-00007	THERMOWELL CONNECTION STANDARD DETAILS
24590-WTP-MV-M59T-00011	WASH RINGS STANDARD DETAILS
24590-WTP-MV-M59T-00016001	VESSEL CONNECTIONS STANDARD DETAILS SHT 1 OF 3
24590-WTP-MV-M59T-00016003	VESSEL CONNECTIONS STANDARD DETAILS SHT 3 OF 3
24590-WTP-MV-M59T-00017	VESSEL INSPECTION MANWAY STANDARD DETAILS
24590-WTP-MV-M59T-00009	LIFTING LUGS STANDARD DETAILS
24590-WTP-MV-M59T-00003	TIE DOWN SWIVEL LUG MOUNTING STUDS STANDARD DETAILS

REVISION HISTORY

REV	DESCRIPTION	ORG	CHKD	RVWD	APVD	DATE
0	ISSUED FOR PURCHASE, SUPERSEDES 24590-PTF-MV-HLP-00003, REV 3	[signature]	MS	NA	[signature]	4/4/11

THIS DRAWING TO BE READ IN CONJUNCTION WITH THE MECHANICAL DATA SHEET No 24590-PTF-MVD-HLP-00006

PLEASE NOTE THAT SOURCE, SPECIAL NUCLEAR AND BYPRODUCT MATERIALS, AS DEFINED IN THE ATOMIC ENERGY ACT OF 1954 (AEA), ARE REGULATED AT THE U.S. DEPARTMENT OF ENERGY (DOE) FACILITIES EXCLUSIVELY BY DOE ACTING PURSUANT TO ITS AEA AUTHORITY. DOE ASSERTS, THAT PURSUANT TO THE AEA, IT HAS SOLE AND EXCLUSIVE RESPONSIBILITY AND AUTHORITY TO REGULATE SOURCE, SPECIAL NUCLEAR, AND BYPRODUCT MATERIALS AT DOE-OWNED NUCLEAR FACILITIES. INFORMATION CONTAINED HEREIN ON RADIONUCLIDES IS PROVIDED FOR PROCESS DESCRIPTION PURPOSES ONLY.

Q
QUALITY LEVEL

ISSUED BY RPP-WTP PDC
DATE
ISSUE STAMP

PROJECT No.	24590
SITE	HANFORD
AREA	200E
BUILDING No.	10

	BY	DATE
ORIGINATOR	[signature]	03/30/11
CHECKER	[signature]	3/30/11
APPROVER	[signature]	4/4/11
REVIEWER	NA	

CONTENT APPLICABLE TO ALARA? [X] YES [ ] NO
ADR NO. 24590-WTP-ADR-M-03-008 REV. 2
E&NS SCREENING REQUIRED [X] YES [ ] NO E&NS INITIAL IF YES [initials]

RIVER PROTECTION PROJECT
WASTE TREATMENT PLANT
2435 STEVENS CENTER PLACE
RICHLAND, WA 99354

CONTRACT No: DE-AC27-01RV14136

EQUIPMENT ASSEMBLY
HLW FEED RECEIPT VESSEL
HLP-VSL-00022
SHEET 1 OF 4

SCALE: NONE
24590-PTF-MV-HLP-00003001
REV 0

SCREENING IS REQUIRED FOR DRAWING TYPES IDENTIFIED IN 24590-WTP-GPP-SREG-002
'E' SIZE - 44x34
COMPUTER GENERATED - MANUAL DESIGN CHANGES NOT PERMITTED
R11344565
03/30/2011 9:18 AM

FORM E_MASTER 03/2003

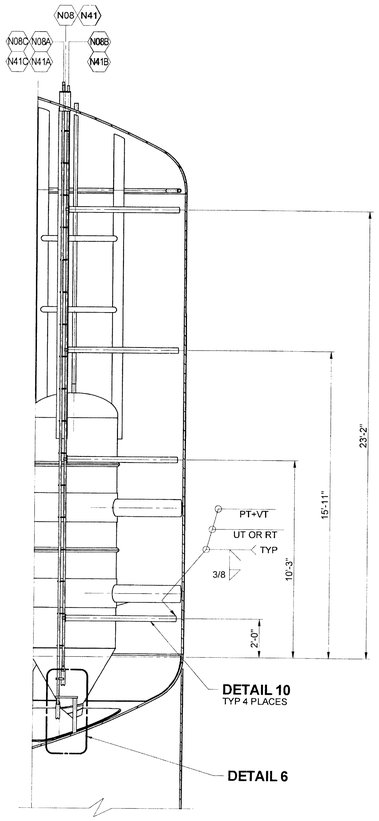

SECTION J-J 15
24590-PTF-MV-HLP-00003002

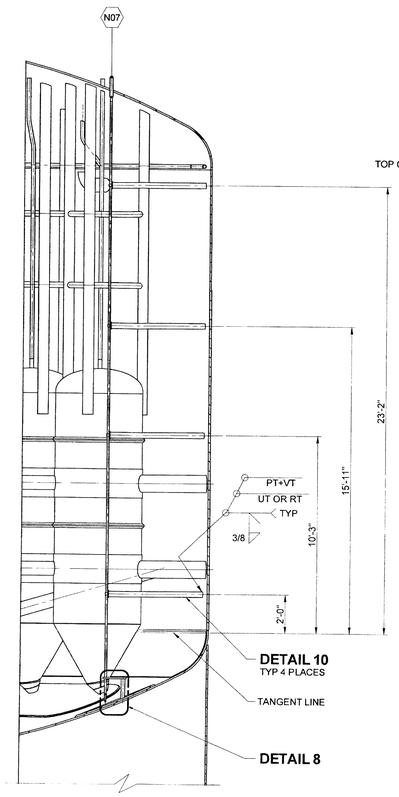

SECTION K-K 29
24590-PTF-MV-HLP-00003002

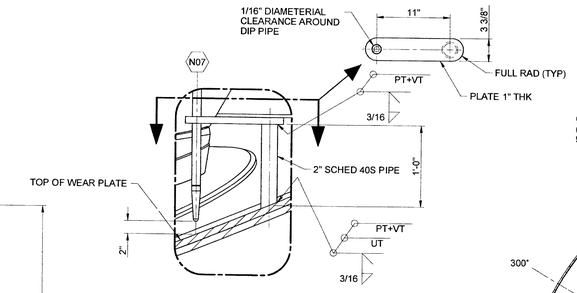

DETAIL 8

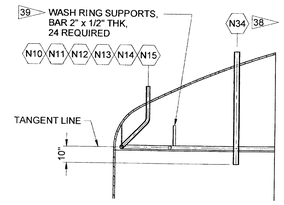

SECTION L-L
24590-PTF-MV-HLP-00003002
OUTER PJM SUPPORT NOT SHOWN FOR CLARITY

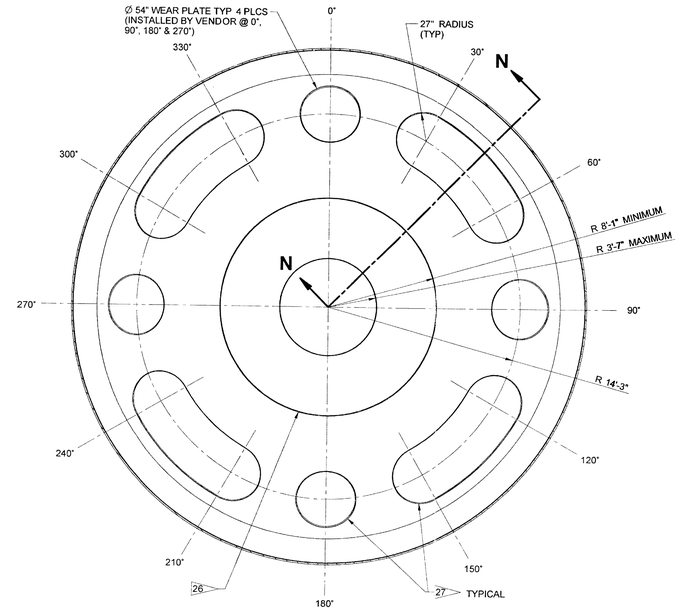

SECTION M-M
24590-PTF-MV-HLP-00003002
INNER & OUTER PJM NOT SHOWN FOR CLARITY
SEE NOTE 3

NOTE:

1. FOR NOTES, SEE 24590-PTF-MV-HLP-00003002.
2. CONTENTS OF THIS DOCUMENT ARE DANGEROUS WASTE PERMIT AFFECTING.

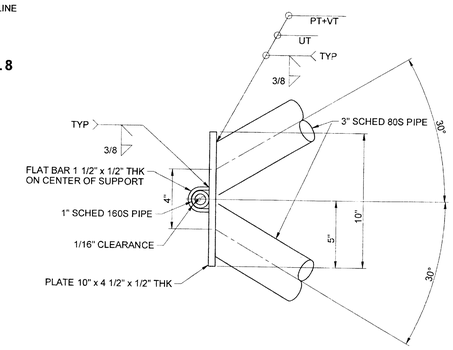

DETAIL 10 15 29

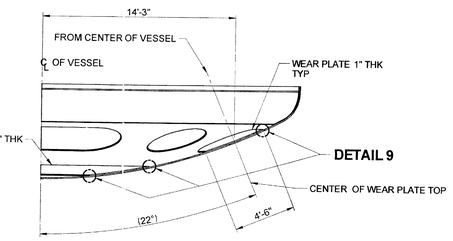

SECTION N-N

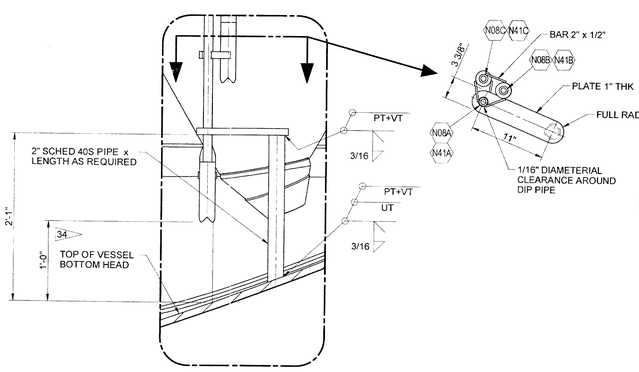

DETAIL 6 28

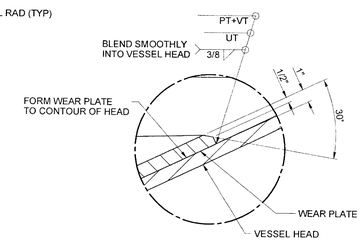

DETAIL 9

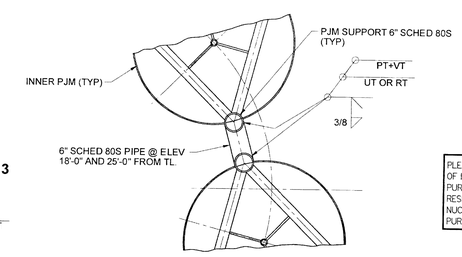

SECTION Q-Q
24590-PTF-MV-HLP-00003003

Please note that source, special nuclear, and byproduct materials, as defined in the Atomic Energy Act of 1954 (AEA) are regulated at the U. S. Department of Energy (DOE) facilities exclusively by DOE acting pursuant to its AEA authority. DOE asserts that pursuant to AEA, it has sole and exclusive responsibility and authority to regulate source, special nuclear, and byproduct materials at DOE-owned nuclear facilities. Information contained herein on radionuclides is provided for process description purposes only.

PLEASE NOTE THAT SOURCE, SPECIAL NUCLEAR AND BYPRODUCT MATERIALS, AS DEFINED IN THE ATOMIC ENERGY ACT OF 1954 (AEA) ARE REGULATED AT THE U.S. DEPARTMENT OF ENERGY (DOE) FACILITIES EXCLUSIVELY BY DOE ACTING PURSUANT TO ITS AEA AUTHORITY. DOE ASSERTS, THAT PURSUANT TO THE AEA, IT HAS SOLE AND EXCLUSIVE RESPONSIBILITY AND AUTHORITY TO REGULATE SOURCE, SPECIAL NUCLEAR, AND BYPRODUCT MATERIALS AT DOE-OWNED NUCLEAR FACILITIES. INFORMATION CONTAINED HEREIN ON RADIONUCLIDES IS PROVIDED FOR PROCESS DESCRIPTION PURPOSES ONLY.

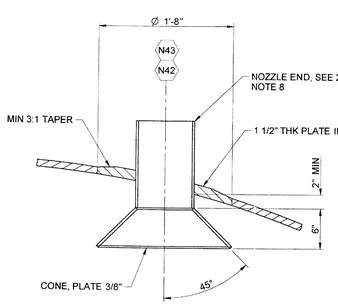

DETAIL 7

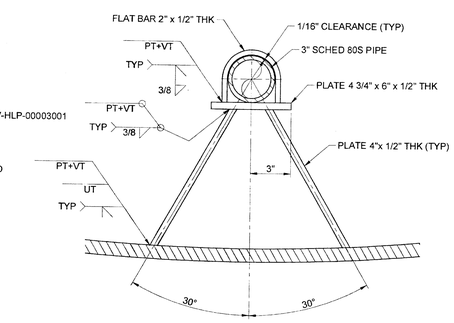

DETAIL 11
24590-PTF-MV-HLP-00003003

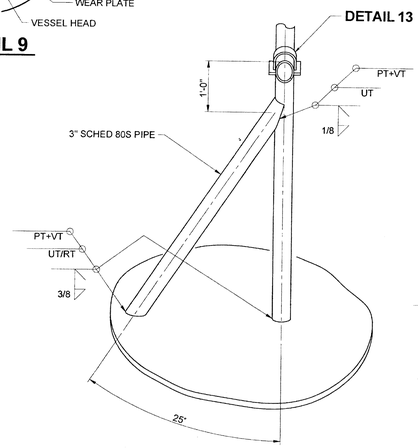

DETAIL 12
24590-PTF-MV-HLP-00003003

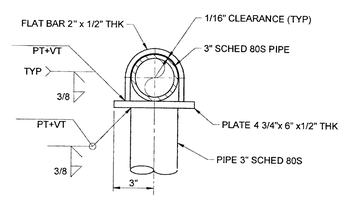

DETAIL 13

DRAWINGS INDEX

DWG NO	TITLE
24590-PTF-MV-HLP-00003001	EQUIPMENT ASSEMBLY HLW FEED RECEIPT VESSEL HLP-VSL-00022 SHEET 1 OF 4
24590-PTF-MV-HLP-00003002	HLP-VSL-00022 MIXING ASSESSMENT EQUIPMENT CHANGES PLAN, ELEVATION AND SECTION VIEWS SHEET 2 OF 4
24590-PTF-MV-HLP-00003003	HLP-VSL-00022 MIXING ASSESSMENT EQUIPMENT CHANGES SECTION AND DETAIL VIEWS SHEET 3 OF 4
24590-PTF-MV-HLP-00003004	HLP-VSL-00022 MIXING ASSESSMENT EQUIPMENT CHANGES SECTION AND DETAIL VIEWS SHEET 4 OF 4

REVISION HISTORY

REV	DESCRIPTION	ORG	CHKD	RVWD	APVD	DATE
0	ISSUED FOR PURCHASE. SUPERSEDES 24590-PTF-MV-HLP-00003, REV 3					3/31/11

Q QUALITY LEVEL

ISSUED BY 24590-WTP-PDC
DATE
ISSUE STAMP

PROJECT No.	24590	
SITE	HANFORD	
AREA	200E	
BUILDING No.	10	
	BY	DATE
ORIGINATOR		03/30/11
CHECKER		3/30/11
APPROVER		3/31/11
REVIEWER		3/31/11

CONTENT APPLICABLE TO ALARA? [X] YES [ ] NO
ADR NO. 24590-WTP-ADR-MI-03-008 REV. 2
E&NS SCREENING REQUIRED [X] YES [ ] NO E&NS INITIAL IF YES

BECHTEL

RIVER PROTECTION PROJECT
WASTE TREATMENT PLANT
2435 STEVENS CENTER PLACE
RICHLAND, WA 99354

CONTRACT No: DE-AC27-01RV14136

HLP-VSL-00022
MIXING ASSESSMENT
EQUIPMENT CHANGES
SECTIONAND DETAIL VIEWS
SHEET 4 OF 4

SCALE NONE | **24590-PTF-MV-HLP-00003004** | REV **0**

SCREENING IS REQUIRED FOR DRAWING TYPES IDENTIFIED IN 24590-WTP-QRP-SREQ-002

"E" SIZE - 44x34
COMPUTER GENERATED - MANUAL DESIGN CHANGES NOT PERMITTED

R11344568

03/30/2011 8:52 AM

FORM E_MASTER 03/2003

24590-PTF-MV-PWD-00010002

GENERAL NOTES:

1. FOR GENERAL NOTES, SEE 24590-PTF-MV-PWD-00010001.

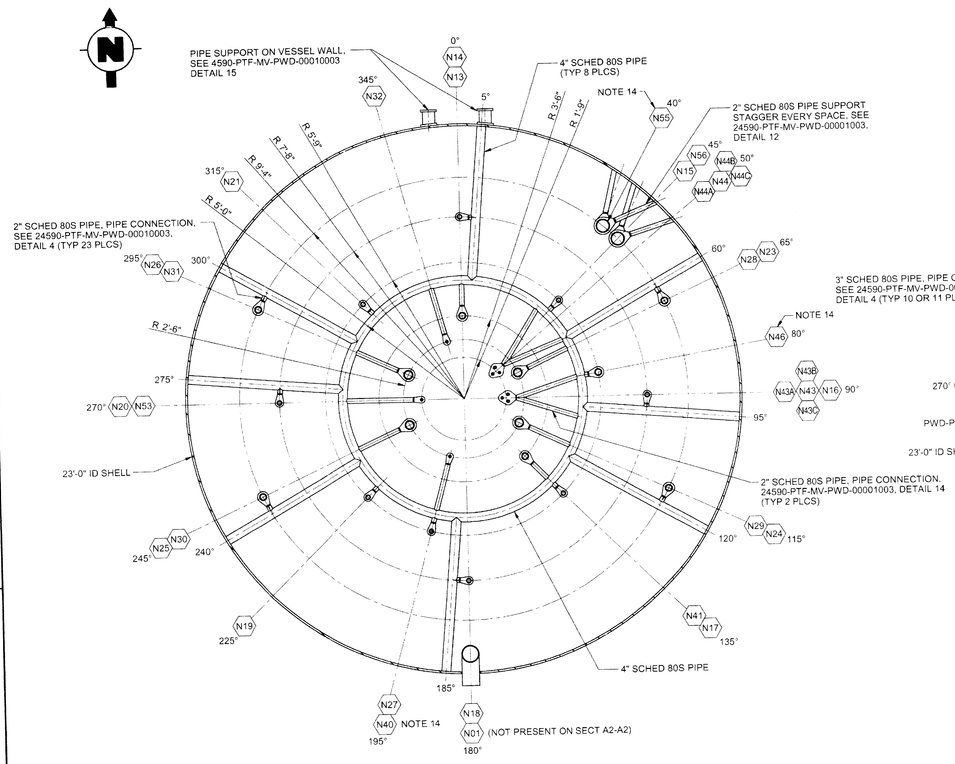

SECTION A1-A1

℄ UPPER RING SUPPORT @ EL 23'-4" FROM BOT TL

SECTION A2-A2

℄ LOWER RING SUPPORT @ EL 15'-10" FROM BOT TL

24590-PTF-MV-PWD-00010001

NOTE: SOME COMPOENTS REMOVED FOR CLARITY

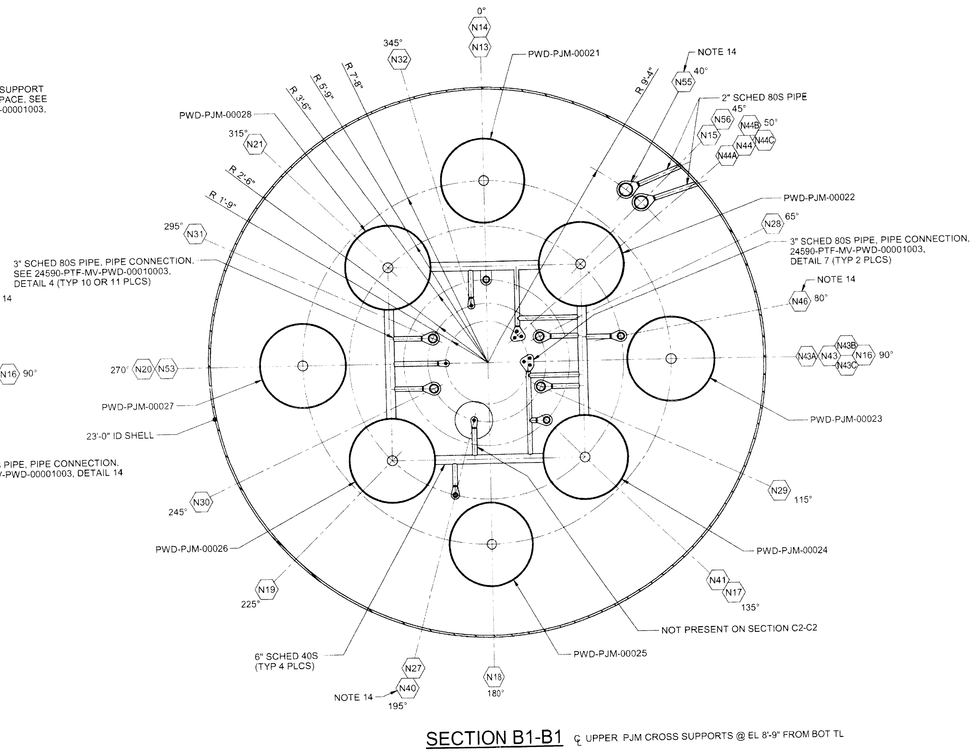

SECTION B1-B1

℄ UPPER PJM CROSS SUPPORTS @ EL 8'-9" FROM BOT TL

SECTION C2-C2

℄ LOWER PJM CROSS SUPPORTS @ EL 1'-3" FROM BOT TL

INNER SUPPORT SHOWN

24590-PTF-MV-PWD-00010001

NOTE: SOME COMPOENTS REMOVED FOR CLARITY

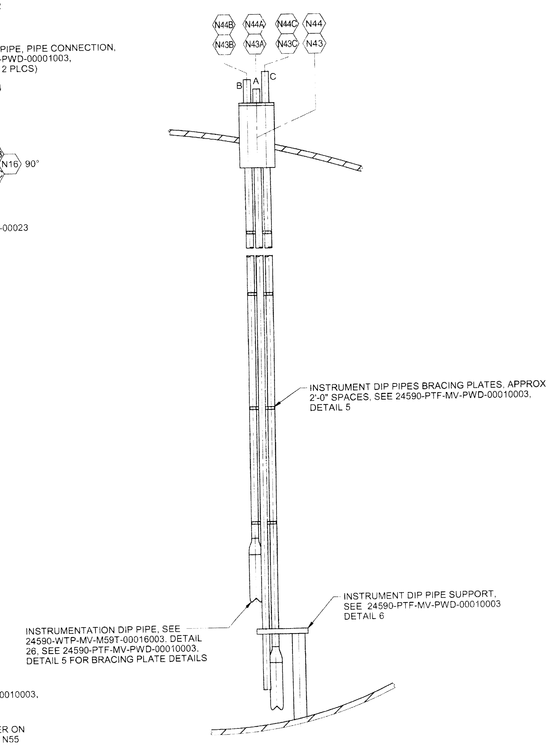

DETAIL 1

24590-PTF-MV-PWD-00010001

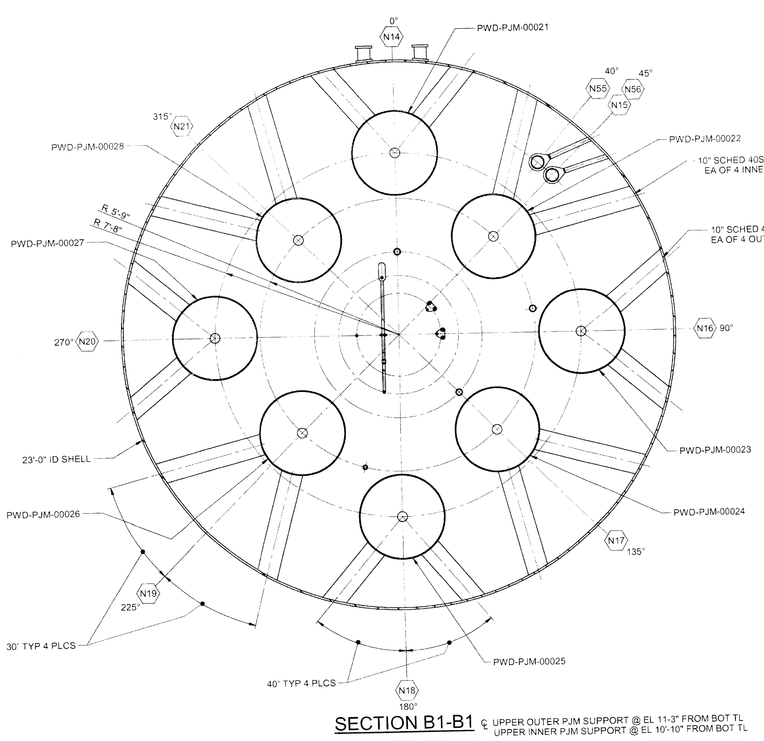

SECTION B1-B1

℄ UPPER OUTER PJM SUPPORT @ EL 11-3" FROM BOT TL
UPPER INNER PJM SUPPORT @ EL 10'-10" FROM BOT TL

SECTION B2-B2

℄ MIDDLE OUTER PJM SUPPORT @ EL 6'-3" FROM BOT TL
MIDDLE INNER PJM SUPPORT @ EL 5'-10" FROM BOT TL

24590-PTF-MV-PWD-00010001

NOTE: SOME COMPOENTS REMOVED FOR CLARITY

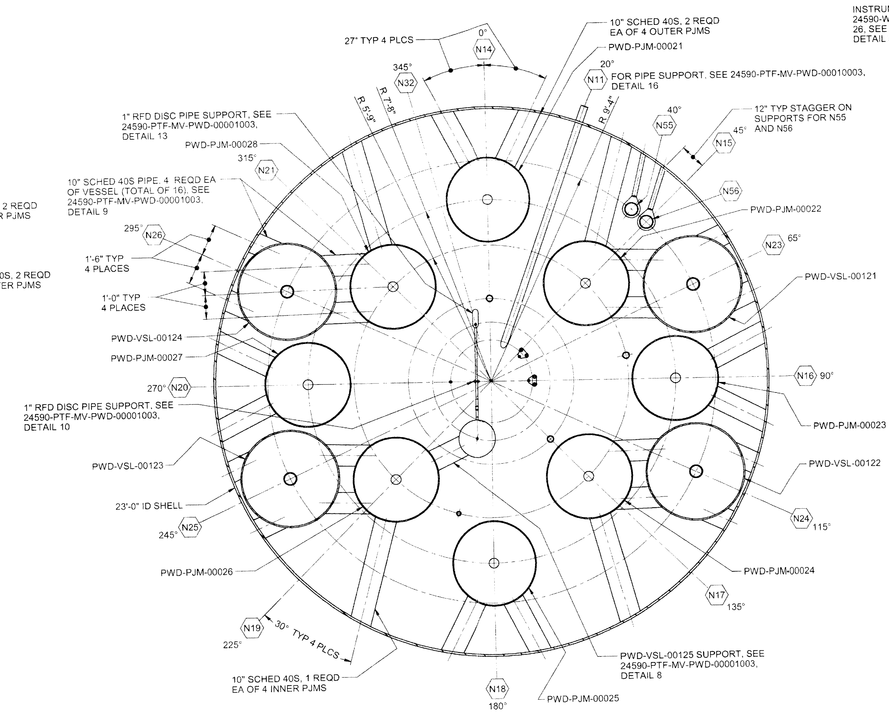

SECTION C1-C1

℄ LOWER OUTER PJM SUPPORT @ EL 1'-3" FROM BOT TL
LOWER INNER PJM SUPPORT @ EL 0'-10" FROM BOT TL

OUTER SUPPORT SHOWN

24590-PTF-MV-PWD-00010001

NOTE: SOME COMPOENTS REMOVED FOR CLARITY

DRAWINGS INDEX

DWG NO	REV	TITLE
24590-PTF-MV-PWD-00010001	0	EQUIPMENT ASSEMBLY PLANT WASH VESSEL PWD-VSL-00044 SHEET 1 OF 3
24590-PTF-MV-PWD-00010002	0	SECTIONS & DETAILS PLANT WASH VESSEL PWD-VSL-00044 SHEET 2 OF 3
24590-PTF-MV-PWD-00010003	0	DETAILS PLANT WASH VESSEL PWD-VSL-00044 SHEET 3 OF 3

PLEASE NOTE THAT SOURCE, SPECIAL NUCLEAR AND BYPRODUCT MATERIALS, AS DEFINED IN THE ATOMIC ENERGY ACT OF 1954 (AEA), ARE REGULATED AT THE U.S. DEPARTMENT OF ENERGY (DOE) FACILITIES EXCLUSIVELY BY DOE ACTING PURSUANT TO ITS AEA AUTHORITY. DOE ASSERTS, THAT PURSUANT TO THE AEA, IT HAS SOLE AND EXCLUSIVE RESPONSIBILITY AND AUTHORITY TO REGULATE SOURCE, SPECIAL NUCLEAR, AND BYPRODUCT MATERIALS AT DOE-OWNED NUCLEAR FACILITIES. INFORMATION CONTAINED HEREIN ON RADIONUCLIDES IS PROVIDED FOR PROCESS DESCRIPTION PURPOSES ONLY.

REVISION HISTORY

REV	DESCRIPTION	ORG	CHKD	RVWD	APVD	DATE
0	ADDED SECTIONS AND DETAILS DRAWING					5/25/10

Q

ISSUED BY (USE WTP POC)

PROJECT No	24590	
SITE	HANFORD	
AREA	200E	
BUILDING No	12	
	BY	DATE
ORIGINATOR		25-May-10
CHECKER		5/25/10
APPROVER		05/25/10
REVIEWER		5/25/10

CONTENT APPLICABLE TO ALARA? [X] YES [ ] NO

ADR NO 24590-WTP-ADR-M-03-005 REV: 2

E&HS SCREENING REQUIRED [X] YES [ ] NO E&HS INITIAL FYES

SCREENING IS COMPLETED FOR ITEM(S): ALL OF THE 9 DESIGN AFFECT DIMENSIONS

RIVER PROTECTION PROJECT
WASTE TREATMENT PLANT
2435 STEVENS CENTER PLACE
RICHLAND, WA 99354

CONTRACT No DE-AC27-01RV14136

SECTIONS & DETAILS PLANT WASH VESSEL PWD-VSL-00044 SHEET 2 OF 3

SCALE NONE

24590-PTF-MV-PWD-00010002

REV 0

E SIZE - 44X34

R 1222224

COMPUTER GENERATED MANUAL DESIGN CHANGES NOT PERMITTED

05/21/2010 3:26:25 PM

FORM 1 MASTER 032003

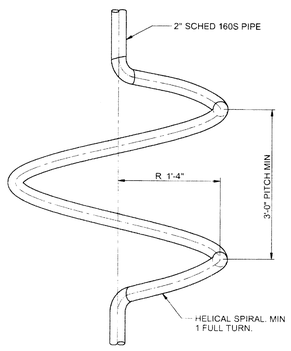

DETAIL 2
24590-PTF-MV-PWD-00010001

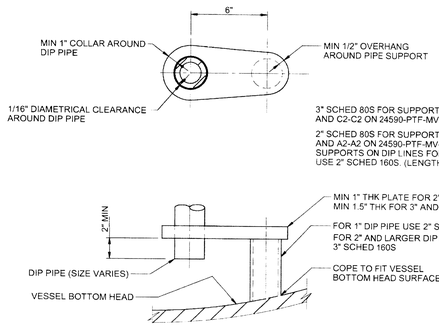

DETAIL 3
24590-PTF-MV-PWD-00010001

3" SCHED 80S FOR SUPPORTS SHOWN IN SECTIONS B1-B1 AND C2-C2 ON 24590-PTF-MV-PWD-00010002.

2" SCHED 80S FOR SUPPORTS SHOWN IN SECTIONS A1-A1 AND A2-A2 ON 24590-PTF-MV-PWD-00010002, EXCEPT FOR SUPPORTS ON DIP LINES FOR N26, N29, N30 & N31 WHICH USE 2" SCHED 160S. (LENGTH AS REQD)

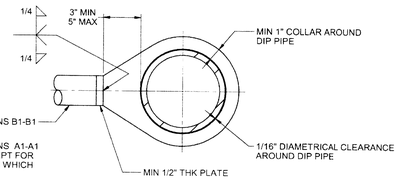

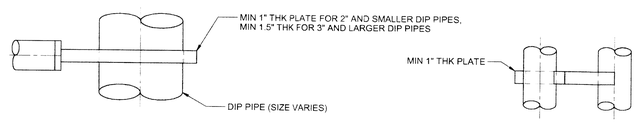

DETAIL 4
24590-PTF-MV-PWD-00010002
NOTE 15

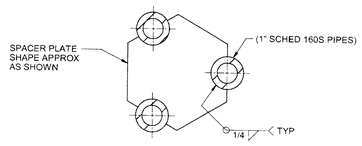

DETAIL 5
24590-PTF-MV-PWD-00010002

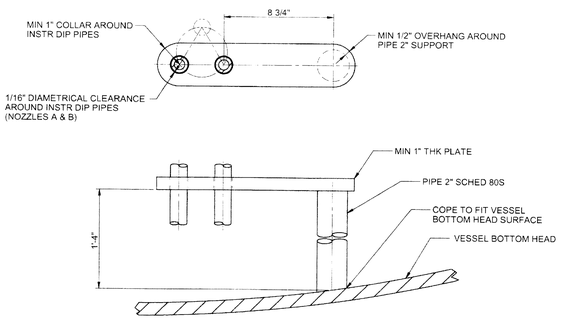

DETAIL 6
24590-PTF-MV-PWD-00010002

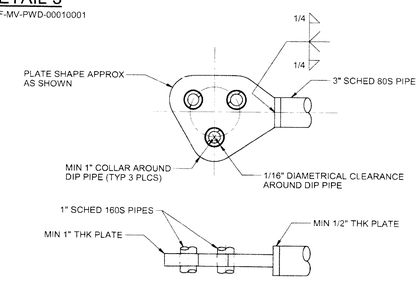

DETAIL 7
24590-PTF-MV-PWD-00010002

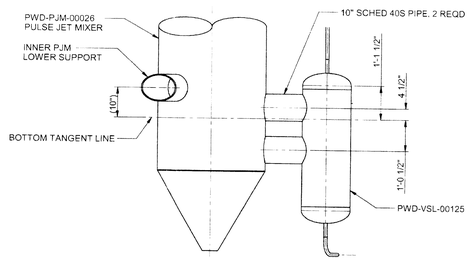

DETAIL 8
24590-PTF-MV-PWD-00010002

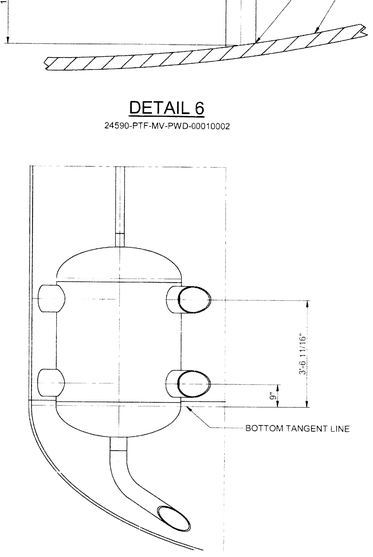

DETAIL 9
24590-PTF-MV-PWD-00010002

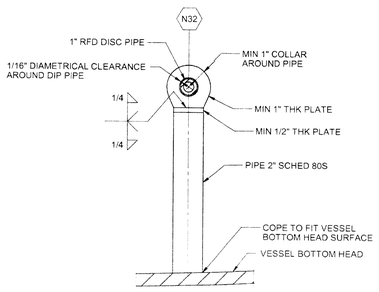

DETAIL 10
24590-PTF-MV-PWD-00010002

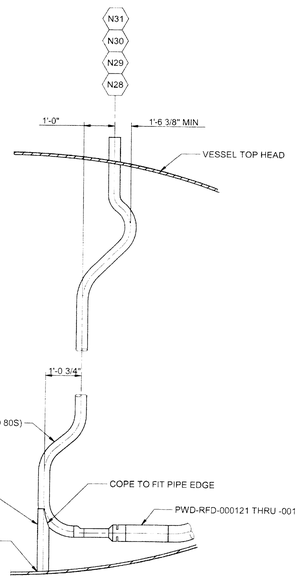

DETAIL 11
24590-PTF-MV-PWD-00010001

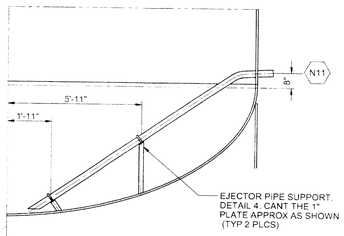

DETAIL 16
24590-PTF-MV-PWD-00010002

GENERAL NOTES:

1. FOR GENERAL NOTES, SEE 24590-PTF-MV-PWD-00010001.

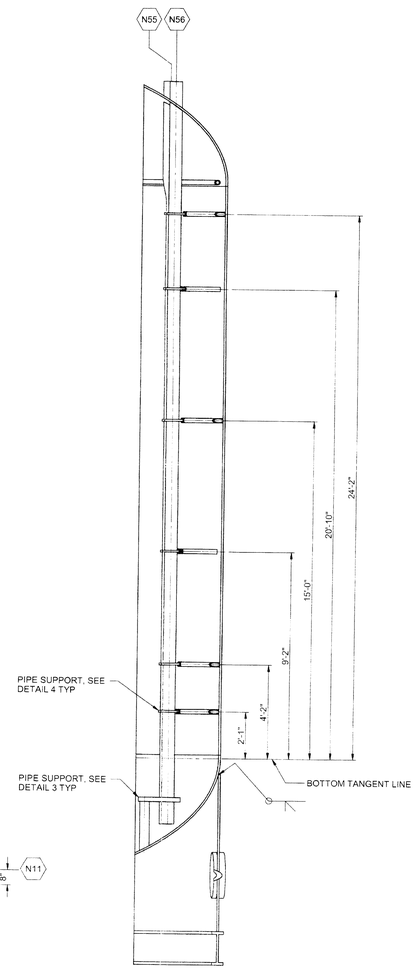

DETAIL 12
24590-PTF-MV-PWD-00010002

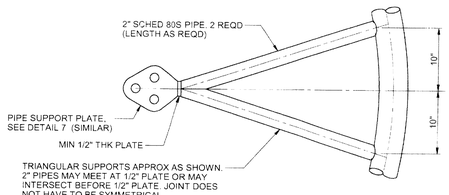

DETAIL 14
24590-PTF-MV-PWD-00010002

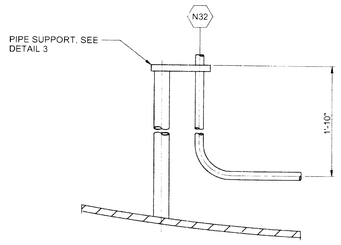

DETAIL 13
24590-PTF-MV-PWD-00010002

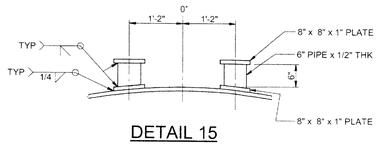

DETAIL 15
24590-PTF-MV-PWD-00010002
PAIR OF 2 @ 3 W/ C.L. ELEVATIONS OF:
"Z" = 139.5"
"Z" = 153"
"Z" = 294"

DRAWINGS INDEX		
DWG NO	REV	TITLE
24590-PTF-MV-PWD-00010001	0	EQUIPMENT ASSEMBLY PLANT WASH VESSEL PWD-VSL-00044 SHEET 1 OF 3
24590-PTF-MV-PWD-00010002	0	SECTIONS & DETAILS PLANT WASH VESSEL PWD-VSL-00044 SHEET 2 OF 3
24590-PTF-MV-PWD-00010003	0	DETAILS PLANT WASH VESSEL PWD-VSL-00044 SHEET 3 OF 3

PLEASE NOTE THAT SOURCE, SPECIAL NUCLEAR AND BYPRODUCT MATERIALS, AS DEFINED IN THE ATOMIC ENERGY ACT OF 1954 (AEA), ARE REGULATED AT THE U.S. DEPARTMENT OF ENERGY (DOE) FACILITIES EXCLUSIVELY BY DOE ACTING PURSUANT TO ITS AEA AUTHORITY. DOE ASSERTS, THAT PURSUANT TO THE AEA, IT HAS SOLE AND EXCLUSIVE RESPONSIBILITY AND AUTHORITY TO REGULATE SOURCE, SPECIAL NUCLEAR, AND BYPRODUCT MATERIALS AT DOE-OWNED NUCLEAR FACILITIES. INFORMATION CONTAINED HEREIN ON RADIONUCLIDES IS PROVIDED FOR PROCESS DESCRIPTION PURPOSES ONLY.

Please note that source, special nuclear, and byproduct materials, as defined in the Atomic Energy Act of 1954 (AEA), are regulated at the U.S. Department of Energy (DOE) facilities exclusively by DOE acting pursuant to its AEA authority. DOE asserts that pursuant to the AEA, it has sole and exclusive responsibility and authority to regulate source, special nuclear, and byproduct materials at DOE-owned nuclear facilities. Information contained herein on radionuclides is provided for process description purposes only.

REV	DESCRIPTION	ORG	CHKD	RVWD	APVD	DATE
0	ADDED DETAILS DRAWING					5/25/10

REVISION HISTORY

Q

ISSUED BY: ASM-WTP PDC
ISSUES MAP

PROJECT No	24590	
SITE	HANFORD	
AREA	200E	
BUILDING No	32	

	BY	DATE
ORIGINATOR		25-May-10
CHECKER		5/25/10
APPROVER		5/25/10
REVIEWER		5/25/10

CONTENT APPLICABLE TO ALARA? [X] YES [ ] NO
ADR NO. 24590-WTP-ADR-M-03-068 REV. 2
EANS SCREENING REQUIRED [X] YES [ ] NO EANS INITIAL IF YES

RIVER PROTECTION PROJECT
WASTE TREATMENT PLANT
2435 STEVENS CENTER PLACE
RICHLAND, WA 99354

CONTRACT No DE-AC27-01RV14136

DETAILS
PLANT WASH VESSEL
PWD-VSL-00044
SHEET 3 OF 3

SCALE NONE

24590-PTF-MV-PWD-00010003

REV 0

SCREENING IS REQUIRED FOR DRAWING "YES" ENTRIES IN 24590-WTP-SER-SREQ-002

2

COMPUTER GENERATED
MANUAL DESIGN CHANGES NOT PERMITTED

E SIZE - 44x34

05/21/2010 3:27:33 PM

Quarter Ending 09/30/2011 24590-WTP-PCN-ENV-11-003

Hanford Facility RCRA Permit Modification Notification Form
Part III, Operating Unit 10
Waste Treatment and Immobilization Plant

Index

Page 2 of 2:	Hanford Facility RCRA Permit, Part III, Operating Unit 10, Waste Treatment and Immobilization Plant Replace Compliance Schedule in Appendix 1.0
Appendix 1	WTP Interim Compliance Schedule Redline
Appendix 2	WTP Interim Compliance Schedule with Changes Incorporated

Submitted by Co-Operator:

Donna Busche 7/1/11

D. M. Busche Date

Reviewed by ORP Program Office:

D. L. Noyes 7/6/11

Date

Quarter Ending 6/30/2011

24590-WTP-PCN-ENV-11-003

Hanford Facility RCRA Permit Modification Notification Form	
Unit: **Waste Treatment and Immobilization Plant**	Permit Part: **Part III, Operating Unit 10**

Description of Modification:

The purpose of this Class 1 prime modification is to replace the WTP Interim Compliance Schedule included in Appendix 1. The proposed changes to interim compliance dates and final compliance date are based on WTP Consent Decree milestones located in Appendix A, *WTP Consent Decree Milestones, Schedule, Assumptions*, of Consent Decree No. 08-5085-FVS. Permit Condition II.X.2 allows extension of the final compliance date, when granted through the approved change control process identified in the Hanford Federal Facility Agreement and Consent Order. Proposed changes are indicated in the markup included in Appendix 1. The revised Compliance Schedule, with changes incorporated, is included in Appendix 2.

WAC 173-303-830 Modification Class:	Class 1	Class [1]1	Class 2	Class 3
Please mark the Modification Class:		X		

Enter relevant WAC 173-303-830, Appendix I Modification citation number:

Enter wording of WAC 173-303-830, Appendix I Modification citation:

In accordance with WAC 173-303-830(4)(d)(i), this modification notification is requested to be reviewed and approved as a Class [1]1 modification. WAC 173-303-830(4)(d)(ii)(A) states, "Class 1 modifications apply to minor changes that keep the permit current with routine changes to the facility or its operation. These changes do not substantially alter the permit conditions or reduce the capacity of the facility to protect human health or the environment. In the case of Class 1 modifications, the director may require prior approval."

Modification Approved/Concur: ☑ Yes ☐ Denied (state reason below)

Reason for denial:

Reviewed by Ecology:

J. J. Wallace — Date: 8-11-11

24590-PTF-M6-UFP-00027006

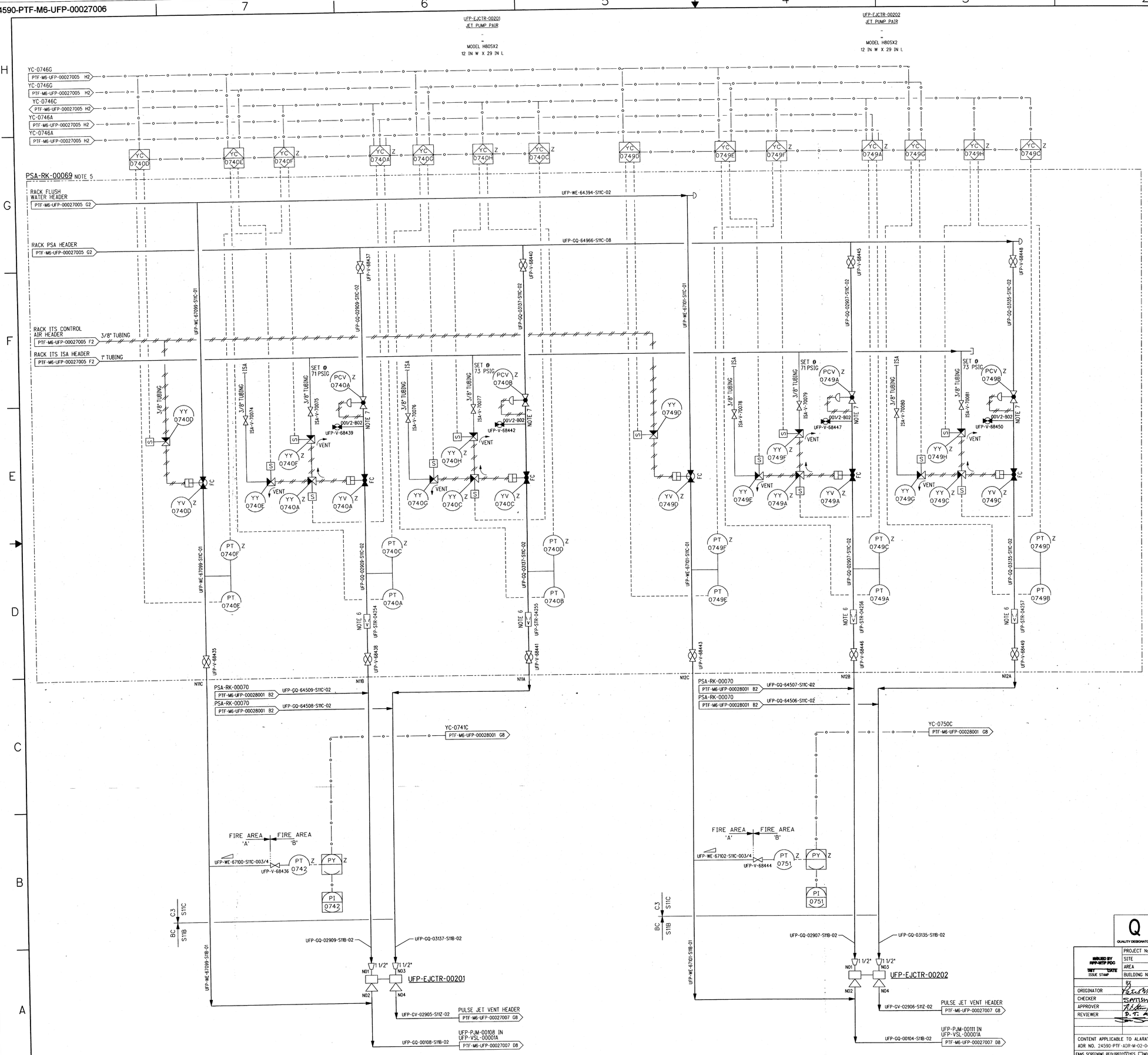

NOTES:

1. SEE DRAWINGS 24590-WTP-M6-50-00001 THROUGH 24590-WTP-M6-50-00008 FOR GENERAL NOTES, SYMBOLS AND LEGEND, AND GENERAL SLOPE REQUIREMENTS.
2. CONTENTS OF THIS DOCUMENT ARE DANGEROUS WASTE PERMIT AFFECTING.
3. THE PRESSURE BOUNDARY FOR ALL COMPONENTS ON THIS DRAWING IS QUALITY LEVEL Q AND SEISMIC CATEGORY SC-I, UNLESS OTHERWISE NOTED. THE PRESSURE BOUNDARY FOR THE NON-SAFETY INSTRUMENT SERVICE AIR (ISA) AND THE CORRESPONDING NON-SAFETY SOLENOID VALVES IT SUPPLIES IS QUALITY LEVEL CM AND SEISMIC CATEGORY SC-IV.
4. ALL LINES SHOWN ON THIS DRAWING SHALL BE FREE DRAINING, EXCEPT BLACK CELL LINES WHICH ARE SELF-DRAINING, UNLESS OTHERWISE NOTED.
5. ALL TUBING OUTSIDE RACK IS TO BE FIELD RUN. TUBING ROUTING, SPECIFICATION OF ADDITIONAL IN-TUBING DEVICES, AND TAGGING OF IN-TUBING DEVICES WITHIN THE RACK TO BE DONE IN ACCORDANCE WITH C&I INSTALLATION DETAILS AND DESIGN GUIDE 24590-WTP-GPG-ENG-0142.
6. STRAINER PERMANENTLY INSTALLED.
7. RECOMMENDED INSTALLATION FOR THE PCV IS TO CONNECT THE CONTROL LINE TO A STRAIGHT RUN OF PIPE 3 TO 5 FEET DOWNSTREAM OF THE PCV AND TO HAVE A MINIMUM STRAIGHT PIPE RUN OF 3 FEET UPSTREAM AND 4 FEET DOWNSTREAM OF THE PCV.

HOLD/OPEN ITEMS:

NONE

REFERENCES:

1. 24590-WTP-3YD-50-00003, SYSTEM DESCRIPTION FOR PULSE JET MIXER AND SPARGER MIXING SUBSYSTEMS.

Please note that source, special nuclear, and byproduct materials, as defined in the Atomic Energy Act of 1954 (AEA) are regulated at the U. S. Department of Energy (DOE) facilities exclusively by DOE pursuant to the AEA. Bechtel National, Inc. (BNI), pursuant to AEA, it has sole and exclusive responsibility and authority to regulate source, special nuclear, and byproduct materials at DOE-owned nuclear facilities. Information contained herein on radionuclides is provided for process description purposes only.

REV	DESCRIPTION	ORG	CHKD	RVWD	APVD	DATE
0	ISSUED FOR CONSTRUCTION					2/17/11

Q — QUALITY DESIGNATOR

REVISION HISTORY

ISSUED BY RPP-WTP PDC — INIT DATE — ISSUE STAMP

PROJECT No.	24590	
SITE	HANFORD	
AREA	200E	
BUILDING No.	10	
	BY	DATE
ORIGINATOR		2/17/11
CHECKER		2/17/11
APPROVER		2/17/11
REVIEWER		2/17/11

CONTENT APPLICABLE TO ALARA? [X] YES [ ] NO
ADR NO. 24590-PTF-ADR-M-02-046 REV: 4
EMS SCREENING REQUIRED? [ ] YES [ ] NO EMS INITIAL IF YES

RIVER PROTECTION PROJECT
WASTE TREATMENT PLANT
2435 STEVENS CENTER PLACE
RICHLAND, WA 99354

CONTRACT No: DE-AC27-01RV14136

P&ID - PTF
ULTRAFILTRATION PROCESS SYSTEM - UTILITY RACK
PSA-RK-00069
UFP-VSL-00001A PJM

SCALE: NONE

24590-PTF-M6-UFP-00027006 — REV 0

SCREENING IS REQUIRED FOR DRAWING TYPES IDENTIFIED IN 24590-WTP-GPP-SREG-002

'E' SIZE - 44x34
COMPUTER GENERATED - MANUAL DESIGN CHANGES NOT PERMITTED

R1033781

2/17/2011 7:04:25 AM

PLOTTED BY: stewbb C:\Work\stewbb\dms03837\PTF\M6\UFP00027006.dgn

FORM E_SDN.DGN 02/2009

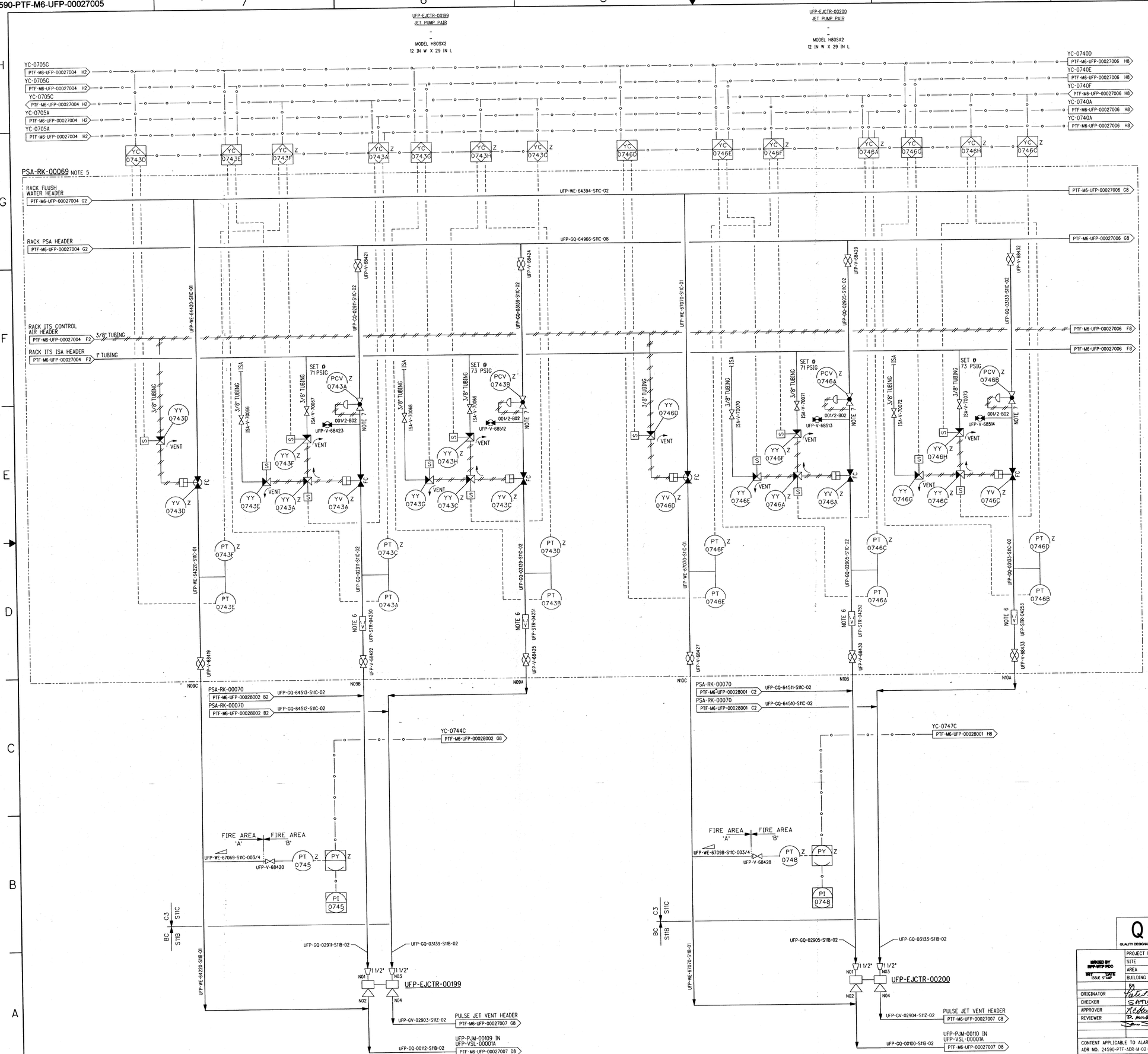

NOTES:

1. SEE DRAWINGS 24590-WTP-M6-50-00001 THROUGH 24590-WTP-M6-50-00008 FOR GENERAL NOTES, SYMBOLS AND LEGEND, AND GENERAL SLOPE REQUIREMENTS.
2. CONTENTS OF THIS DOCUMENT ARE DANGEROUS WASTE PERMIT AFFECTING.
3. THE PRESSURE BOUNDARY FOR ALL COMPONENTS ON THIS DRAWING IS QUALITY LEVEL Q AND SEISMIC CATEGORY SC-I, UNLESS OTHERWISE NOTED. THE PRESSURE BOUNDARY FOR THE NON-SAFETY INSTRUMENT SERVICE AIR (ISA) AND THE CORRESPONDING NON-SAFETY SOLENOID VALVES IT SUPPLIES IS QUALITY LEVEL CM AND SEISMIC CATEGORY SC-IV.
4. ALL LINES SHOWN ON THIS DRAWING SHALL BE FREE DRAINING, EXCEPT BLACK CELL LINES WHICH ARE SELF-DRAINING, UNLESS OTHERWISE NOTED.
5. ALL TUBING OUTSIDE RACK IS TO BE FIELD RUN. TUBING ROUTING, SPECIFICATION OF ADDITIONAL IN-TUBING DEVICES, AND TAGGING OF IN-TUBING DEVICES WITHIN THE RACK TO BE DONE IN ACCORDANCE WITH C&I INSTALLATION DETAILS AND DESIGN GUIDE 24590-WTP-GPG-ENG-0142.
6. STRAINER PERMANENTLY INSTALLED.
7. RECOMMENDED INSTALLATION FOR THE PCV IS TO CONNECT THE CONTROL LINE TO A STRAIGHT RUN OF PIPE 3 TO 5 FEET DOWNSTREAM OF THE PCV AND TO HAVE A MINIMUM STRAIGHT PIPE RUN OF 3 FEET UPSTREAM AND 4 FEET DOWNSTREAM OF THE PCV.

HOLD/OPEN ITEMS:

NONE

REFERENCES:

1. 24590-WTP-3YD-50-00003, SYSTEM DESCRIPTION FOR PULSE JET MIXER AND SPARGER MIXING SUBSYSTEMS.

Please note that source, special nuclear, and byproduct materials, as defined in the Atomic Energy Act of 1954 (AEA) are regulated at the U. S. Department of Energy (DOE) facilities exclusively by DOE acting pursuant to its AEA authority. DOE exercises its AEA authority pursuant to its sole and exclusive jurisdiction and authority over the possession, ownership, use, and byproduct authority at DOE-owned nuclear facilities. Information contained herein on radionuclides is provided for process description purposes only.

REV	DESCRIPTION	ORG	CHKD	RVWD	APVD	DATE
0	ISSUED FOR CONSTRUCTION		SJ	DPM		2/17/11

Q — QUALITY DESIGNATOR

REVISION HISTORY

ISSUED BY RPP-WTP PDC — SET DATE — ISSUE STAMP

PROJECT No.	24590	
SITE	HANFORD	
AREA	200E	
BUILDING No.	10	

	BY	DATE
ORIGINATOR	Pete Mitchell	2/16/11
CHECKER	SATISH JAIN	2/17/11
APPROVER		2/17/11
REVIEWER	D. MILSON	2-17-11
		2/17/11

CONTENT APPLICABLE TO ALARA? [X] YES [ ] NO
ADR NO. 24590-PTF-ADR-M-02-046 REV: 4
EMS SCREENING REQUIRED? [X] YES [ ] NO EMS INITIAL IF YES

BECHTEL

RIVER PROTECTION PROJECT
WASTE TREATMENT PLANT
2435 STEVENS CENTER PLACE
RICHLAND, WA 99354

CONTRACT No: DE-AC27-01RV14136

P&ID - PTF
ULTRAFILTRATION PROCESS SYSTEM - UTILITY RACK
PSA-RK-00069
UFP-VSL-00001A PJM

SCALE: NONE

24590-PTF-M6-UFP-00027005

REV 0

SCREENING IS REQUIRED FOR DRAWING TYPES IDENTIFIED IN 24590-WTP-GPP-SREQ-002

TP SIZE - 44x34
COMPUTER GENERATED - MANUAL DESIGN CHANGES NOT PERMITTED

R1133378d

2/16/2011 3:58:49 PM

PLOTTED BY: cmmead C:\WGK\cmcooley\dms03637\PTF\M6\P00027005.dgn

FORM E_SDN.DGN 02/2009

(13)

24590-PTF-M6-UFP-00027004

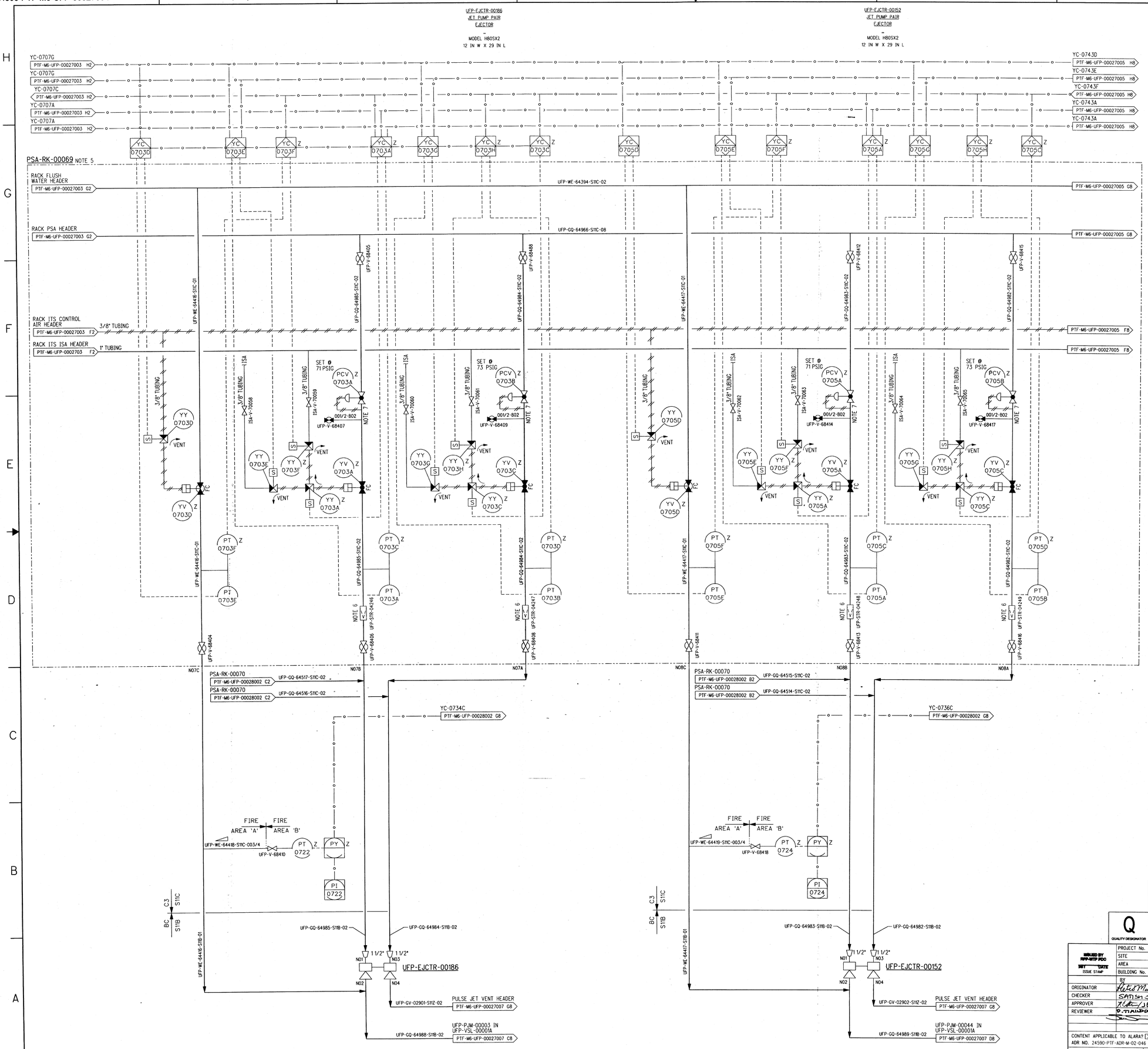

NOTES:

1. SEE DRAWINGS 24590-WTP-M6-50-00001 THROUGH 24590-WTP-M6-50-00008 FOR GENERAL NOTES, SYMBOLS AND LEGEND, AND GENERAL SLOPE REQUIREMENTS.
2. CONTENTS OF THIS DOCUMENT ARE DANGEROUS WASTE PERMIT AFFECTING.
3. THE PRESSURE BOUNDARY FOR ALL COMPONENTS ON THIS DRAWING IS QUALITY LEVEL Q AND SEISMIC CATEGORY SC-I, UNLESS OTHERWISE NOTED. THE PRESSURE BOUNDARY FOR THE NON-SAFETY INSTRUMENT SERVICE AIR (ISA) AND THE CORRESPONDING NON-SAFETY SOLENOID VALVES IT SUPPLIES IS QUALITY LEVEL CM AND SEISMIC CATEGORY SC-IV.
4. ALL LINES SHOWN ON THIS DRAWING SHALL BE FREE DRAINING, EXCEPT BLACK CELL LINES WHICH ARE SELF-DRAINING, UNLESS OTHERWISE NOTED.
5. ALL TUBING OUTSIDE RACK IS TO BE FIELD RUN. TUBING ROUTING, SPECIFICATION OF ADDITIONAL IN-TUBING DEVICES, AND TAGGING OF IN-TUBING DEVICES WITHIN THE RACK TO BE DONE IN ACCORDANCE WITH C&I INSTALLATION DETAILS AND DESIGN GUIDE 24590-WTP-GPG-ENG-0142.
6. STRAINER PERMANENTLY INSTALLED.
7. RECOMMENDED INSTALLATION FOR THE PCV IS TO CONNECT THE CONTROL LINE TO A STRAIGHT RUN OF PIPE 3 TO 5 FEET DOWNSTREAM OF THE PCV AND TO HAVE A MINIMUM STRAIGHT PIPE RUN OF 3 FEET UPSTREAM AND 4 FEET DOWNSTREAM OF THE PCV.

HOLD/OPEN ITEMS:

NONE

REFERENCES:

1. 24590-WTP-3YD-50-00003, SYSTEM DESCRIPTION FOR PULSE JET MIXER AND SPARGER MIXING SUBSYSTEMS.

Please note that source, special nuclear, and byproduct materials, as defined in the Atomic Energy Act of 1954 (AEA) are regulated at the U. S. Department of Energy (DOE) facilities exclusively by DOE pursuant to its AEA authority. DOE asserts that DOE, not the Nuclear Regulatory Commission (NRC), has exclusive authority to regulate source, special nuclear, and byproduct materials at DOE-owned nuclear facilities. Information contained herein on radionuclides is provided for process description purposes only.

REV	DESCRIPTION	ORG	CHKD	RVWD	APVD	DATE
0	ISSUED FOR CONSTRUCTION	RL	SJ	Dom Bos	JBR	2/17/11

Q QUALITY DESIGNATOR

REVISION HISTORY

ISSUED BY RPP-WTP PDC — WRT — DATE — ISSUE STAMP

PROJECT No.	24590	
SITE	HANFORD	
AREA	200E	
BUILDING No.	10	
	BY	DATE
ORIGINATOR	Peter Montague	2/16/11
CHECKER	SATISH SOMA	2/17/11
APPROVER	[illegible]	2/17/11
REVIEWER	D. TRAUBER	2-17-11
		2/17/11

CONTENT APPLICABLE TO ALARA? [X] YES [ ] NO
ADR NO. 24590-PTF-ADR-M-02-046 REV: 4

RIVER PROTECTION PROJECT
WASTE TREATMENT PLANT
2435 STEVENS CENTER PLACE
RICHLAND, WA 99354

CONTRACT No: DE-AC27-01RV14136

P&ID - PTF
ULTRAFILTRATION PROCESS SYSTEM - UTILITY RACK
PSA-RK-00069
UFP-VSL-00001A PJM

SCALE: NONE

24590-PTF-M6-UFP-00027004 REV 0

EMS SCREENING REQUIRED? [X] YES [ ] NO EMS INITIAL IF YES [ ]

SCREENING IS REQUIRED FOR DRAWING TYPES IDENTIFIED IN 24590-WTP-GPP-SREG-002

"E" SIZE - 44x34
COMPUTER GENERATED - MANUAL DESIGN CHANGES NOT PERMITTED

FORM E_SDN.DGN 02/2009

2/16/2011 4:00:48 PM

PLOTTED BY: cmmead C:\Work\cmccorey\dms0283?\PTF\M6\PF00027004.dgn

24590-PTF-M6-UFP-00027003

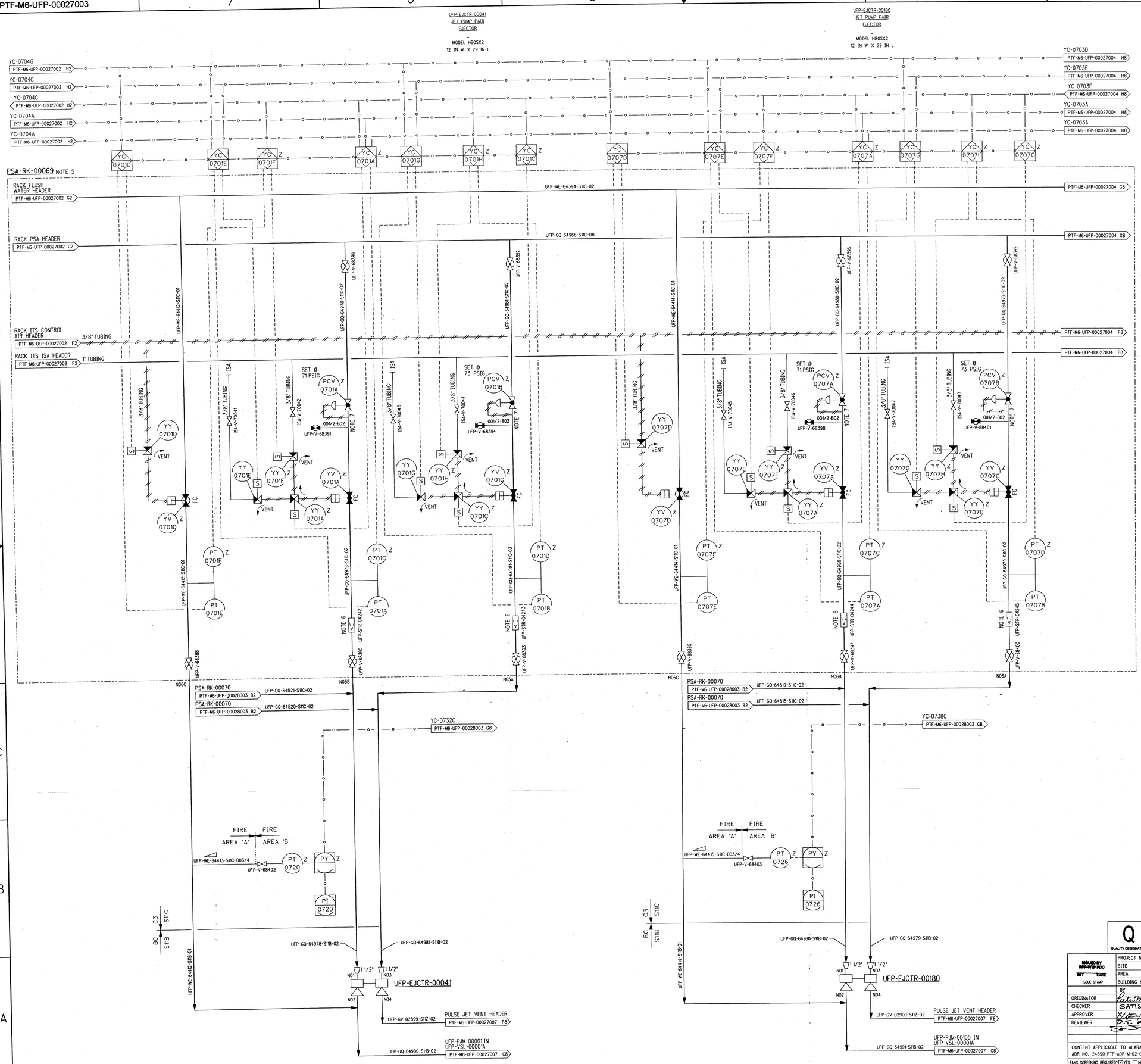

NOTES:

1. SEE DRAWINGS 24590-WTP-M6-50-00001 THROUGH 24590-WTP-M6-50-00008 FOR GENERAL NOTES, SYMBOLS AND LEGEND, AND GENERAL SLOPE REQUIREMENTS.
2. CONTENTS OF THIS DOCUMENT ARE DANGEROUS WASTE PERMIT AFFECTING.
3. THE PRESSURE BOUNDARY FOR ALL COMPONENTS ON THIS DRAWING IS QUALITY LEVEL Q AND SEISMIC CATEGORY SC-I, UNLESS OTHERWISE NOTED. THE PRESSURE BOUNDARY FOR THE NON-SAFETY INSTRUMENT SERVICE AIR (ISA) AND THE CORRESPONDING NON-SAFETY SOLENOID VALVES IT SUPPLIES IS QUALITY LEVEL CM AND SEISMIC CATEGORY SC-IV.
4. ALL LINES SHOWN ON THIS DRAWING SHALL BE FREE DRAINING, EXCEPT BLACK CELL LINES WHICH ARE SELF-DRAINING, UNLESS OTHERWISE NOTED.
5. ALL TUBING OUTSIDE RACK IS TO BE FIELD RUN. TUBING ROUTING, SPECIFICATION OF ADDITIONAL IN-TUBING DEVICES, AND TAGGING OF IN-TUBING DEVICES WITHIN THE RACK TO BE DONE IN ACCORDANCE WITH C&I INSTALLATION DETAILS AND DESIGN GUIDE 24590-WTP-GPG-ENG-0142.
6. STRAINER PERMANENTLY INSTALLED.
7. RECOMMENDED INSTALLATION FOR THE PCV IS TO CONNECT THE CONTROL LINE TO A STRAIGHT RUN OF PIPE 3 TO 5 FEET DOWNSTREAM OF THE PCV AND TO HAVE A MINIMUM STRAIGHT PIPE RUN OF 3 FEET UPSTREAM AND 4 FEET DOWNSTREAM OF THE PCV.

HOLD/OPEN ITEMS:

NONE

REFERENCES:

1. 24590-WTP-3YD-50-00003, SYSTEM DESCRIPTION FOR PULSE JET MIXER AND SPARGER MIXING SUBSYSTEMS.

Please note that source, special nuclear, and byproduct materials, as defined by the Atomic Energy Act of 1954 (AEA), are regulated at the U. S. Department of Energy (DOE) facilities exclusively by DOE acting pursuant to its AEA authority. DOE asserts that pursuant to AEA, it has sole and exclusive responsibility and authority to regulate source, special nuclear, and byproduct material at DOE-owned nuclear facilities. Information contained herein on radionuclides is provided for process description purposes only.

REV	DESCRIPTION	ORG	CHKD	RVWD	APVD	DATE
0	ISSUED FOR CONSTRUCTION		SJ	DJW	KM	2/17/11

QUALITY DESIGNATOR: Q

REVISION HISTORY

ISSUED BY RPP-WTP PDC
WTP DATE
ISSUE STAMP

PROJECT No.	24590	
SITE	HANFORD	
AREA	200E	
BUILDING No.	10	

RIVER PROTECTION PROJECT
WASTE TREATMENT PLANT
2435 STEVENS CENTER PLACE
RICHLAND, WA 99354

CONTRACT No: DE-AC27-01RV14136

	BY	DATE
ORIGINATOR	Peter Martelli	2/17/11
CHECKER	SATISH SHAH	2/17/11
APPROVER	Kelly Mendoza	2/17/11
REVIEWER	D.T. MILDOP	2-17-11
		2/17/11

P&ID - PTF
ULTRAFILTRATION PROCESS SYSTEM - UTILITY RACK
PSA-RK-00069
UFP-VSL-00001A PJM

CONTENT APPLICABLE TO ALARA? [X] YES [ ] NO
ADR NO. 24590-PTF-ADR-M-02-046 REV: 4
EAMS SCREENING REQUIRED? [X] YES [ ] NO EAMS INITIAL IF YES: [ ]

SCALE: NONE
24590-PTF-M6-UFP-00027003
REV 0

SCREENING IS REQUIRED FOR DRAWING TYPES IDENTIFIED IN 24590-WTP-GPP-SREQ-002

E SIZE - 44x34
COMPUTER GENERATED - MANUAL DESIGN CHANGES NOT PERMITTED

2/17/2011 7:08:31 AM

C:\Work\eresesb\dms03837\PTF\UFP00027003.dgn

PLOTTED BY: eesesb

FORM E_SDN.DGN 02/2009

10

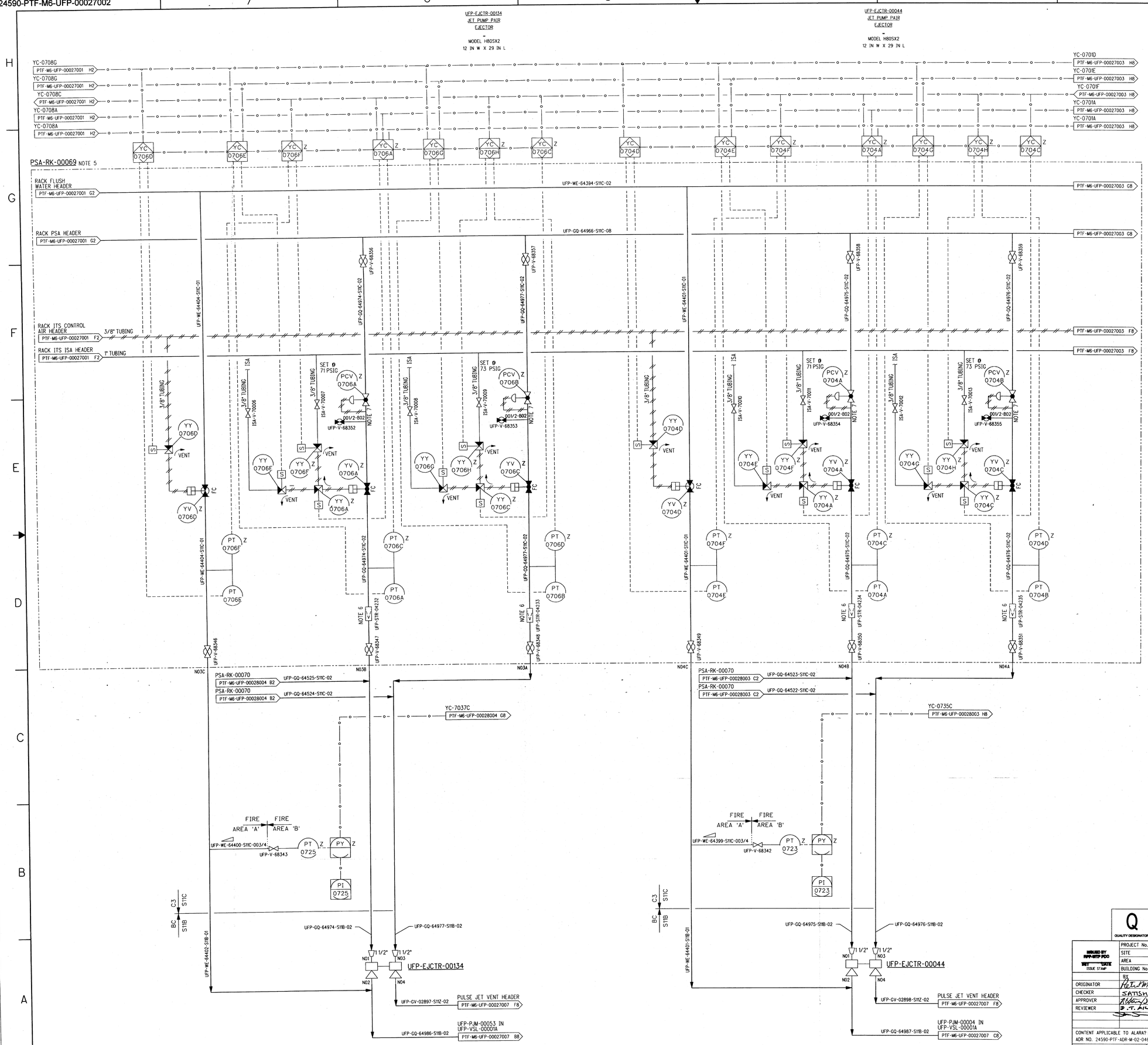

NOTES:

1. SEE DRAWINGS 24590-WTP-M6-50-00001 THROUGH 24590-WTP-M6-50-00008 FOR GENERAL NOTES, SYMBOLS AND LEGEND, AND GENERAL SLOPE REQUIREMENTS.
2. CONTENTS OF THIS DOCUMENT ARE DANGEROUS WASTE PERMIT AFFECTING.
3. THE PRESSURE BOUNDARY FOR ALL COMPONENTS ON THIS DRAWING IS QUALITY LEVEL Q AND SEISMIC CATEGORY SC-I, UNLESS OTHERWISE NOTED. THE PRESSURE BOUNDARY FOR THE NON-SAFETY INSTRUMENT SERVICE AIR (ISA) AND THE CORRESPONDING NON-SAFETY SOLENOID VALVES IT SUPPLIES IS QUALITY LEVEL CM AND SEISMIC CATEGORY SC-IV.
4. ALL LINES SHOWN ON THIS DRAWING SHALL BE FREE DRAINING, EXCEPT BLACK CELL LINES WHICH ARE SELF-DRAINING, UNLESS OTHERWISE NOTED.
5. ALL TUBING OUTSIDE RACK IS TO BE FIELD RUN. TUBING ROUTING, SPECIFICATION OF ADDITIONAL IN-TUBING DEVICES, AND TAGGING OF IN-TUBING DEVICES WITHIN THE RACK TO BE DONE IN ACCORDANCE WITH C&I INSTALLATION DETAILS AND DESIGN GUIDE 24590-WTP-GPG-ENG-0142.
6. STRAINER PERMANENTLY INSTALLED.
7. RECOMMENDED INSTALLATION FOR THE PCV IS TO CONNECT THE CONTROL LINE TO A STRAIGHT RUN OF PIPE 3 TO 5 FEET DOWNSTREAM OF THE PCV AND TO HAVE A MINIMUM STRAIGHT PIPE RUN OF 3 FEET UPSTREAM AND 4 FEET DOWNSTREAM OF THE PCV.

HOLD/OPEN ITEMS:

NONE

REFERENCES:

1. 24590-WTP-3YD-50-00003, SYSTEM DESCRIPTION FOR PULSE JET MIXER AND SPARGER MIXING SUBSYSTEMS.

Please note that source, special nuclear, and byproduct materials, as defined by the Atomic Energy Act of 1954 (AEA) are regulated at the U.S. Department of Energy (DOE) facilities exclusively by DOE acting as the AEA regulator. In the State of Washington, pursuant to AEA, it has sole and exclusive responsibility and authority to regulate source, special nuclear, and byproduct materials at DOE-owned nuclear facilities. Information contained herein on radionuclides is provided for process description purposes only.

REV	DESCRIPTION	ORG	CHKD	RVWD	APVD	DATE
0	ISSUED FOR CONSTRUCTION	PJH	SJ	DMC	JBA	2/17/11

REVISION HISTORY

Q
QUALITY DESIGNATOR

ISSUED BY RPP-WTP PDC
INIT DATE
ISSUE STAMP

PROJECT No.	24590	
SITE	HANFORD	
AREA	200E	
BUILDING No.	10	
	BY	DATE
ORIGINATOR	Peter Martinez	2/17/11
CHECKER	SATISH JAIN	2/17/11
APPROVER	[illegible]	2/17/11
REVIEWER	[illegible]	2-17-11
		2/17/11

CONTENT APPLICABLE TO ALARA? [X] YES [ ] NO
ADR NO. 24590-PTF-ADR-M-02-046 REV: 4
EMS SCREENING REQUIRED? [X] YES [ ] NO EMS INITIAL IF YES

BECHTEL

RIVER PROTECTION PROJECT
WASTE TREATMENT PLANT
2435 STEVENS CENTER PLACE
RICHLAND, WA 99354

CONTRACT No: DE-AC27-01RV14136

P&ID - PTF
ULTRAFILTRATION PROCESS SYSTEM - UTILITY RACK
PSA-RK-00069
UFP-VSL-00001A PJM

SCALE: NONE

24590-PTF-M6-UFP-00027002

REV 0

SCREENING IS REQUIRED FOR DRAWING TYPES IDENTIFIED IN 24590-WTP-GPP-SREG-002

'E' SIZE - 44x34
COMPUTER GENERATED - MANUAL DESIGN CHANGES NOT PERMITTED

R11353777

2/17/2011 7:13:49 AM

PLOTTED BY: eeeebb C:\Work\eeeebb\dms03837\PTFM6\UFP00027002.dgn

FORM E_SDN.DGN 02/2009

(9)

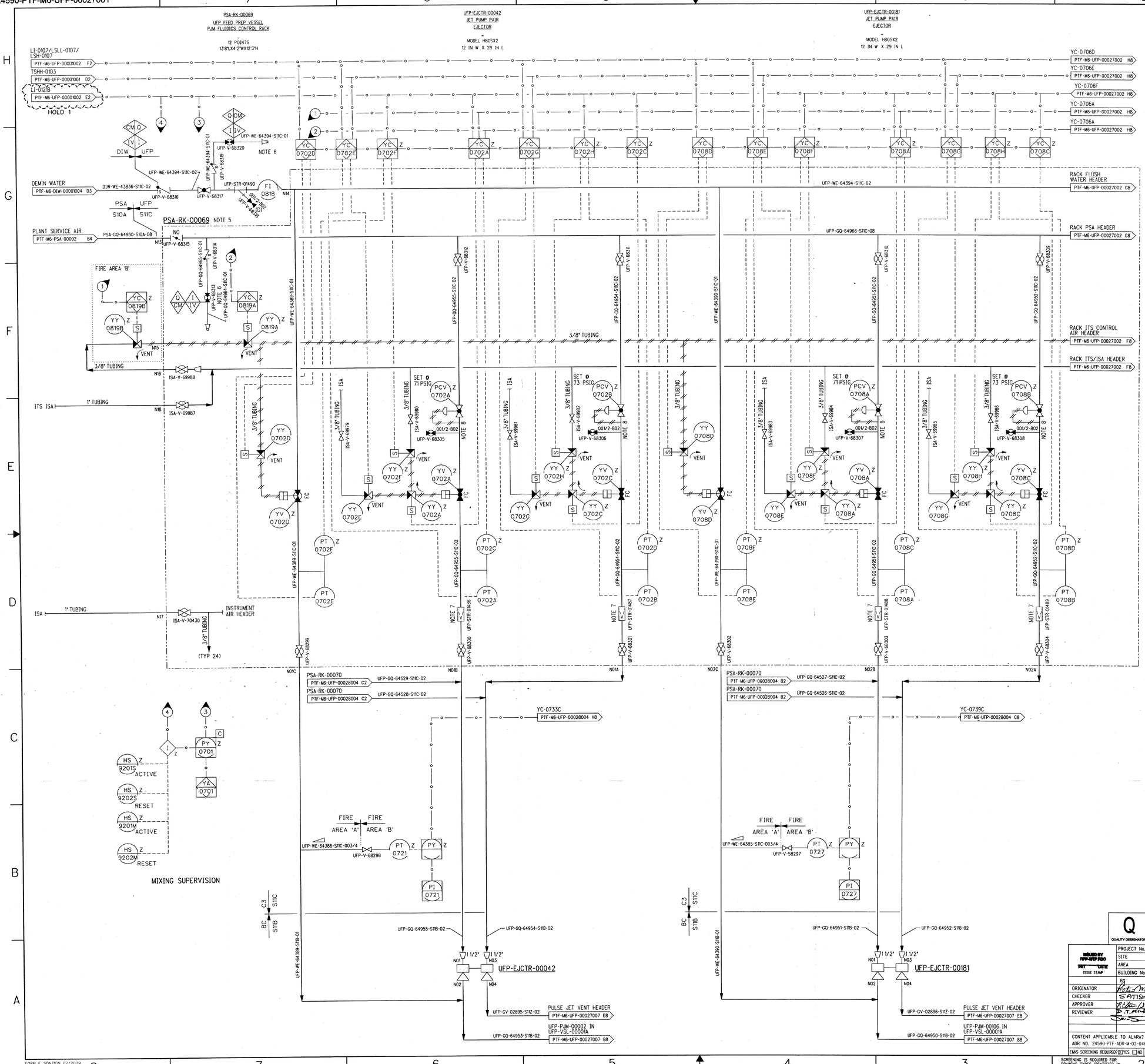

NOTES:

1. SEE DRAWINGS 24590-WTP-M6-50-00001 THROUGH 24590-WTP-M6-50-00008 FOR GENERAL NOTES, SYMBOLS AND LEGEND, AND GENERAL SLOPE REQUIREMENTS.
2. CONTENTS OF THIS DOCUMENT ARE DANGEROUS WASTE PERMIT AFFECTING.
3. THE PRESSURE BOUNDARY FOR ALL COMPONENTS ON THIS DRAWING IS QUALITY LEVEL Q AND SEISMIC CATEGORY SC-I, UNLESS OTHERWISE NOTED. THE PRESSURE BOUNDARY FOR THE NON-SAFETY INSTRUMENT SERVICE AIR (ISA) AND THE CORRESPONDING NON-SAFETY SOLENOID VALVES IT SUPPLIES IS QUALITY LEVEL CM AND SEISMIC CATEGORY SC-IV.
4. ALL LINES SHOWN ON THIS DRAWING SHALL BE FREE DRAINING, EXCEPT BLACK CELL LINES WHICH ARE SELF-DRAINING, UNLESS OTHERWISE NOTED.
5. ALL TUBING OUTSIDE RACK IS TO BE FIELD RUN. TUBING ROUTING, SPECIFICATION OF ADDITIONAL IN-TUBING DEVICES, AND TAGGING OF IN-TUBING DEVICES WITHIN THE RACK TO BE DONE IN ACCORDANCE WITH C&I INSTALLATION DETAILS AND DESIGN GUIDE 24590-WTP-GPG-ENG-0142.
6. CONNECTION PROVIDED FOR REAGENTS, PLANT WASH, AND SERVICE AIR.
7. STRAINER PERMANENTLY INSTALLED.
8. RECOMMENDED INSTALLATION FOR THE PCV IS TO CONNECT THE CONTROL LINE TO A STRAIGHT RUN OF PIPE 3 TO 5 FEET DOWNSTREAM OF THE PCV AND TO HAVE A MINIMUM STRAIGHT PIPE RUN OF 3 FEET UPSTREAM AND 4 FEET DOWNSTREAM OF THE PCV.

HOLD/OPEN ITEMS:

1. PENDING SAFETY-RELATED MIXING DESIGN.

REFERENCES:

1. 24590-WTP-3YD-50-00003, SYSTEM DESCRIPTION FOR PULSE JET MIXER AND SPARGER MIXING SUBSYSTEMS.

Please note that source, special nuclear, and byproduct materials, as defined in the Atomic Energy Act of 1954 (AEA) are regulated at the U. S. Department of Energy (DOE) facilities exclusively by DOE acting pursuant to its AEA authority. DOE asserts that pursuant to AEA, it has sole and exclusive responsibility and authority to regulate source, special nuclear, and byproduct materials at its facilities. Any reference to regulation of such materials herein on radionuclides is provided for process description purposes only.

DRAWING INDEX

DWG NO	TITLE
24590-PTF-M6-UFP-00027001	UTILITY RACK PSA-RK-00069 UFP-VSL-00001A
24590-PTF-M6-UFP-00027002	UTILITY RACK PSA-RK-00069 UFP-VSL-00001A
24590-PTF-M6-UFP-00027003	UTILITY RACK PSA-RK-00069 UFP-VSL-00001A
24590-PTF-M6-UFP-00027004	UTILITY RACK PSA-RK-00069 UFP-VSL-00001A
24590-PTF-M6-UFP-00027005	UTILITY RACK PSA-RK-00069 UFP-VSL-00001A
24590-PTF-M6-UFP-00027006	UTILITY RACK PSA-RK-00069 UFP-VSL-00001A
24590-PTF-M6-UFP-00027007	VESSEL PJM UFP-VSL-00001A

Q
QUALITY DESIGNATOR

REVISION HISTORY

REV	DESCRIPTION	ORG	CHKD	RVWD	APVD	DATE
0	ISSUED FOR CONSTRUCTION	MM	SJ	DTR	JBR	2/17/11

ISSUED BY RPP-WTP PDC
INIT DATE
ISSUE STAMP

	BY	DATE
PROJECT No.	24590	
SITE	HANFORD	
AREA	200E	
BUILDING No.	10	
ORIGINATOR	Peter McGuell	2/17/11
CHECKER	SATISH JAIN	2/17/11
APPROVER	Nilesh Bhamaria	2/17/11
REVIEWER	D.T. Rhodes	2-17-11
		EFFIL

CONTENT APPLICABLE TO ALARA? [X] YES [ ] NO
ADR NO. 24590-PTF-ADR-M-02-046 REV: 4
EMS SCREENING REQUIRED [X] YES [ ] NO EMS INITIAL IF YES

BECHTEL

RIVER PROTECTION PROJECT
WASTE TREATMENT PLANT
2435 STEVENS CENTER PLACE
RICHLAND, WA 99354

CONTRACT No: DE-AC27-01RV14136

P&ID - PTF
ULTRAFILTRATION PROCESS SYSTEM
UTILITY RACK PSA-RK-00069
UFP-VSL-00001A PJM

SCALE: NONE

24590-PTF-M6-UFP-00027001 REV 0

"E" SIZE - 44x34
COMPUTER GENERATED - MANUAL DESIGN CHANGES NOT PERMITTED

SCREENING IS REQUIRED FOR DRAWING TYPES IDENTIFIED IN 24590-WTP-GPP-SREG-002

R11333776

2/17/2011 7:21:33 AM

C:\Work\eeweb\dms03837\PTF\M6\P00027001.dgn

PLOTTED BY: eeweb

FORM E_SDN.DGN 02/2009

24590-PTF-M6-UFP-00007007

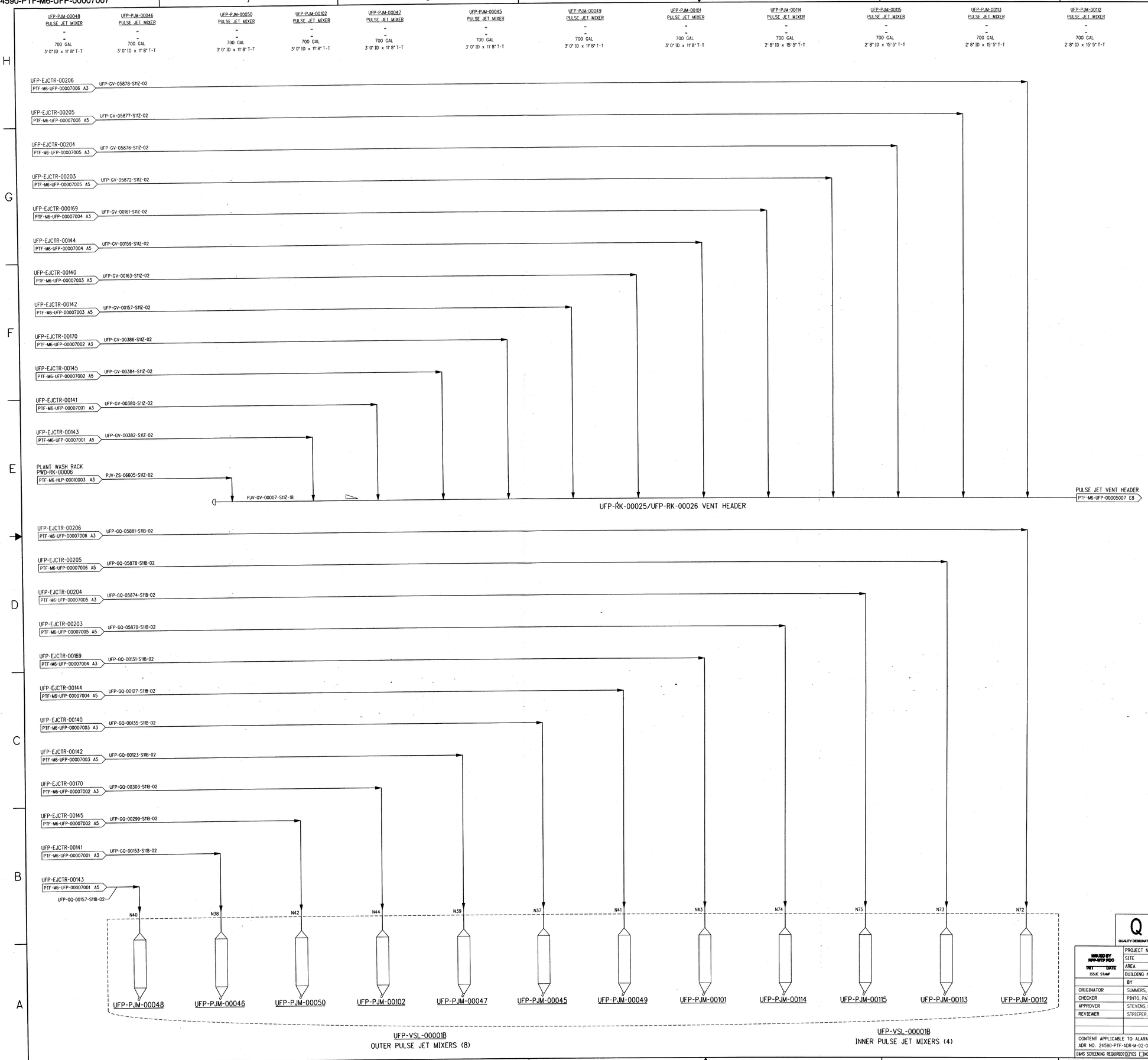

NOTES:

1. SEE DRAWINGS 24590-WTP-M6-50-00001 THROUGH 24590-WTP-M6-50-00008 FOR GENERAL NOTES, SYMBOLS AND LEGEND, AND GENERAL SLOPE REQUIREMENTS.
2. CONTENTS OF THIS DOCUMENT ARE DANGEROUS WASTE PERMIT AFFECTING.
3. THE PRESSURE BOUNDARY FOR ALL COMPONENTS ON THIS DRAWING IS QUALITY LEVEL Q AND SEISMIC CATEGORY SC-I, UNLESS OTHERWISE NOTED.
4. ALL LINES ON THIS DRAWING ARE LOCATED IN THE BLACK CELL AND SHALL BE SELF-DRAINING, UNLESS OTHERWISE NOTED.
5. DELETED
6. THIS DRAWING IS CONVERTED FROM A SINGLE SHEET TO MULTI-SHEET DRAWINGS AND, IN PART, SUPERSEDES 24590-PTF-M6-UFP-00007 REV 2. THIS IS A MAJOR REVISION. NO REVISION CLOUDS ARE SHOWN. THIS DRAWING MAY INCLUDE INFORMATION FROM 24590-PTF-M6N-M80T-00014, -00015, -00026, -00037, -00038, 24590-PTF-M6N-UFP-00049, AND -00072.
7. REVISION 1: MAJOR REVISION, NO REVISION CLOUDS ARE SHOWN. INCORPORATED 24590-PTF-M6LN-UFP-00027, 24590-PTF-M6N-10-00004, 24590-PTF-M6N-M80T-00055, AND 24590-PTF-M6PR-10-00002. FURTHER REVISED TO INCORPORATE EFRT M-3 DESIGN-INPUT REQUIREMENTS FOR INCREASED NUMBER, ARRANGEMENT, AND PERFORMANCE OF PULSE JET MIXERS. MOVED DEPICTION OF PULSE MIXERS (PJM) FOR UFP-VSL-00001A TO 24590-PTF-M6-UFP-00027007, ADDED DEPICTION OF PJM FORMERLY SHOWN ON 24590-PTF-M6-UFP-00008007, MOVED PJM FOR PWD-VSL-00044 TO 24590-PTF-M6-HLP-00027006 AND -00028006, AND RECONFIGURED VENT HEADER COMMENSURATE WITH UFP-RK-00025 AND -00026 DESIGNS.

HOLD/OPEN ITEMS:

1. DELETED

REFERENCES:

1. 24590-WTP-3YD-50-00003, SYSTEM DESCRIPTION FOR PULSE JET MIXER AND SPARGER MIXING SUBSYSTEMS.

Please note that source, special nuclear, and byproduct materials, as defined in the Atomic Energy Act of 1954 (AEA) are regulated by the U. S. Department of Energy (DOE) to the exclusion of any other agency at the U. S. Department of Energy (DOE) facility. DOE, exercising its pursuant to AEA, it has sole and exclusive responsibility and authority to regulate source, special nuclear, and byproduct materials at DOE-owned nuclear facilities. Information contained herein on radionuclides is provided for process description purposes only.

REV	DESCRIPTION	ORG	CHKD	RVWD	APVD	DATE
1	REVISED PER NOTE 7	MA	SJ	JBA	RSJ	2/17/11
0	ISSUED FOR CONSTRUCTION SEE NOTE 6	MAS	APP	ES/CL	RS/JM	10/28/08

REVISION HISTORY

Q QUALITY DESIGNATOR

ISSUED BY RPP-WTP PDC INIT DATE ISSUE STAMP

PROJECT No.	24590	
SITE	HANFORD	
AREA	200E	
BUILDING No.	10	
	BY	DATE
ORIGINATOR	SUMMERS, MICHAEL	10/23/08
CHECKER	PINTO, PAT	10/23/08
APPROVER	STEVENS, ROBERT	10/28/08
REVIEWER	STRIEPER, EGBERT	10/23/08

CONTENT APPLICABLE TO ALARA? [X] YES [ ] NO
ADR NO. 24590-PTF-ADR-M-02-046 REV: 4
EMS SCREENING REQUIRED? [X] YES [ ] NO EMS INITIAL IF YES

BECHTEL

RIVER PROTECTION PROJECT
WASTE TREATMENT PLANT
2435 STEVENS CENTER PLACE
RICHLAND, WA 99354

CONTRACT No: DE-AC27-01RV14136

P&ID - PTF ULTRAFILTRATION PROCESS SYSTEM - VESSEL PJM UFP-VSL-00001B

SCALE: NONE

24590-PTF-M6-UFP-00007007

REV 1

SCREENING IS REQUIRED FOR DRAWING TYPES IDENTIFIED IN 24590-WTP-GPP-SREG-002

E-SIZE - 44x34
COMPUTER GENERATED - MANUAL DESIGN CHANGES NOT PERMITTED

R11333787

2/10/2011 12:23:28 PM

PLOTTED BY: eldorn C:\Work\eldorn\dms03837\PTF\M6UFP00007007.dgn

FORM E_SDN.DGN 02/2009

24590-PTF-M6-UFP-00007006

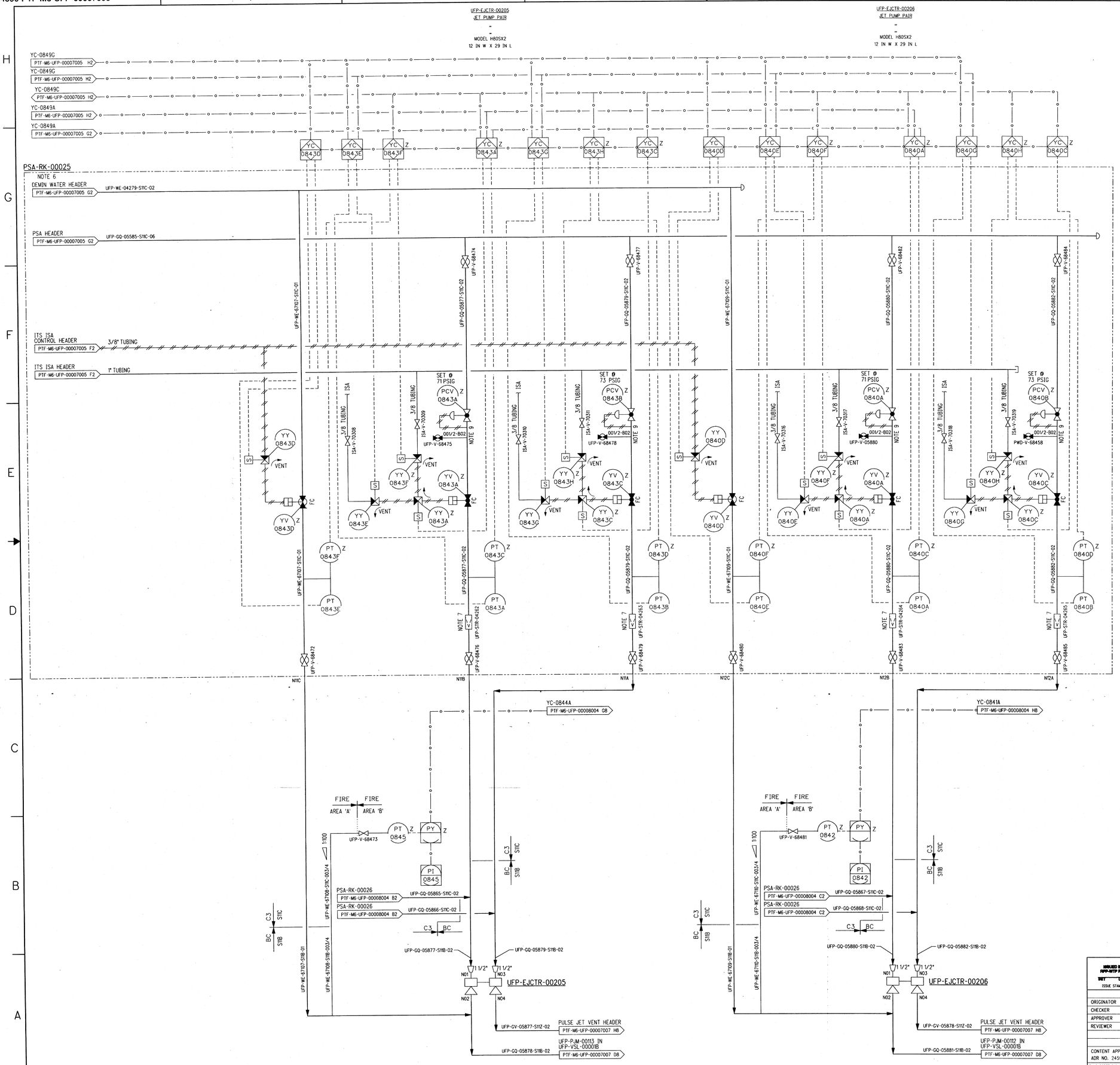

NOTES:

1. SEE DRAWINGS 24590-WTP-M6-50-00001 THROUGH 24590-WTP-M6-50-00008 FOR GENERAL NOTES, SYMBOLS AND LEGEND, AND GENERAL SLOPE REQUIREMENTS.
2. CONTENTS OF THIS DOCUMENT ARE DANGEROUS WASTE PERMIT AFFECTING.
3. THE PRESSURE BOUNDARY FOR ALL COMPONENTS ON THIS DRAWING IS QUALITY LEVEL Q AND SEISMIC CATEGORY SC-I, UNLESS OTHERWISE NOTED. THE PRESSURE BOUNDARY FOR THE NON-SAFETY INSTRUMENT SERVICE AIR (ISA) AND THE CORRESPONDING NON-SAFETY SOLENOID VALVES IT SUPPLIES IS QUALITY LEVEL CM AND SEISMIC CATEGORY SC-IV.
4. ALL LINES SHOWN ON THIS DRAWING SHALL BE FREE DRAINING, EXCEPT BLACK CELL LINES WHICH ARE SELF-DRAINING, UNLESS OTHERWISE NOTED.
5. DELETED
6. ALL TUBING OUTSIDE RACK TO BE FIELD RUN. TUBING ROUTING, SPECIFICATION OF ADDITIONAL IN-TUBING DEVICES, AND TAGGING OF IN-TUBING DEVICES WITHIN THE RACK TO BE DONE IN ACCORDANCE WITH C&I INSTALLATION DETAILS AND DESIGN GUIDE 24590-WTP-GPG-ENG-0142.
7. STRAINER PERMANENTLY INSTALLED.
8. THIS DRAWING IS CONVERTED FROM A SINGLE SHEET TO MULTI-SHEET DRAWINGS AND, IN PART, SUPERSEDES 24590-PTF-M6-UFP-00007 REV 2. THIS IS A MAJOR REVISION, NO REVISION CLOUDS ARE SHOWN. THIS DRAWING MAY INCLUDE INFORMATION FROM 24590-PTF-M6N-M80T-00014, -00015, -00026, -00037, -00038, 24590-PTF-M6N-UFP-00049, AND -00072.
9. RECOMMENDED INSTALLATION FOR THE PCV IS TO CONNECT THE CONTROL LINE TO A STRAIGHT RUN OF PIPE 3 TO 5 FEET DOWNSTREAM OF THE PCV AND TO HAVE A MINIMUM STRAIGHT PIPE RUN OF 3 FEET UPSTREAM AND 4 FEET DOWNSTREAM OF THE PCV.
10. REVISION 1: MAJOR REVISION, NO REVISION CLOUDS ARE SHOWN. 24590-PTF-M6LN-M80T-00004, -00007, -00036, 24590-PTF-M6N-M80T-00102, AND 24590-PTF-M6PR-UFP-00001. FURTHER REVISED TO INCORPORATE ERT M-3 DESIGN-INPUT REQUIREMENTS FOR INCREASED NUMBER, ARRANGEMENT, AND PERFORMANCE OF PULSE JET MIXERS. EARMARKED ALL JET PUMP PAIRS (JPP) AND THEIR DRIVERS TO PJM SERVICE IN UFP-VSL-00001B, ADDED JPP AND DRIVES FOR NEW PULSE JET MIXERS (PJM) IN UFP-VSL-00001B, MOVED PWD JPP AND DRIVES TO NEW HLP-RK-00071 AND -00072 RACKS, AND CONVERTED RACK FROM 50 TO 100 PERCENT REDUNDANT TRAIN DESIGN.

HOLD/OPEN ITEMS:

NONE

REFERENCES:

1. DELETED
2. 24590-WTP-3YD-50-00003, SYSTEM DESCRIPTION FOR PULSE JET MIXER AND SPARGER MIXING SUBSYSTEMS.

Please note that source, special nuclear, and byproduct materials, as defined in the Atomic Energy Act of 1954 (AEA) are regulated at the U. S. Department of Energy (DOE) facilities exclusively by DOE under the authority of the AEA. Bechtel National, Inc. pursuant to AEA, it has sole and exclusive responsibility and authority to regulate source, special nuclear, and byproduct materials at DOE-owned nuclear facilities. Information contained herein on radionuclides is provided for process description purposes only.

REV	DESCRIPTION	ORG	CHKD	RVWD	APVD	DATE
1	REVISED PER NOTE 10, INCORP. LISTED DCNS.	JJJ	SJ	JMA	RSM	2/17/11
0	ISSUED FOR CONSTRUCTION SEE NOTE 8	MAS	APP	ES/QL	RS/JM	10/28/08

Q QUALITY DESIGNATOR

REVISION HISTORY

ISSUED BY RPP-WTP PDC INIT DATE ISSUE STAMP

		BY	DATE
PROJECT No.	24590		
SITE	HANFORD		
AREA	200E		
BUILDING No.	10		
ORIGINATOR	SUMMERS, MICHAEL		10/23/08
CHECKER	PINTO, PAT		10/23/08
APPROVER	STEVENS, ROBERT		10/28/08
REVIEWER	STRIEPER, EGBERT		10/23/08

CONTENT APPLICABLE TO ALARA? [X] YES [ ] NO

ADR NO. 24590-PTF-ADR-M-02-046 REV. 4

EMS SCREENING REQUIRED? [X] YES [ ] NO EMS INITIAL IF YES XX

RIVER PROTECTION PROJECT
WASTE TREATMENT PLANT
2435 STEVENS CENTER PLACE
RICHLAND, WA 99354

CONTRACT No: DE-AC27-01RV14136

P&ID - PTF ULTRAFILTRATION PROCESS SYSTEM UTILITY RACK PSA-RK-00025 UFP-VSL-00001B

SCALE: NONE

24590-PTF-M6-UFP-00007006

REV 1

"E" SIZE - 44x34

COMPUTER GENERATED - MANUAL DESIGN CHANGES NOT PERMITTED

SCREENING IS REQUIRED FOR DRAWING TYPES IDENTIFIED IN 24590-WTP-GPP-SREG-002

FORM E_SDN.DGN 02/2009

PLOTTED BY: wmahoney C:\Work\wmahoney\dms33837\PTFM6UFP00007006.dgn 2/16/2011 3:45:57 PM

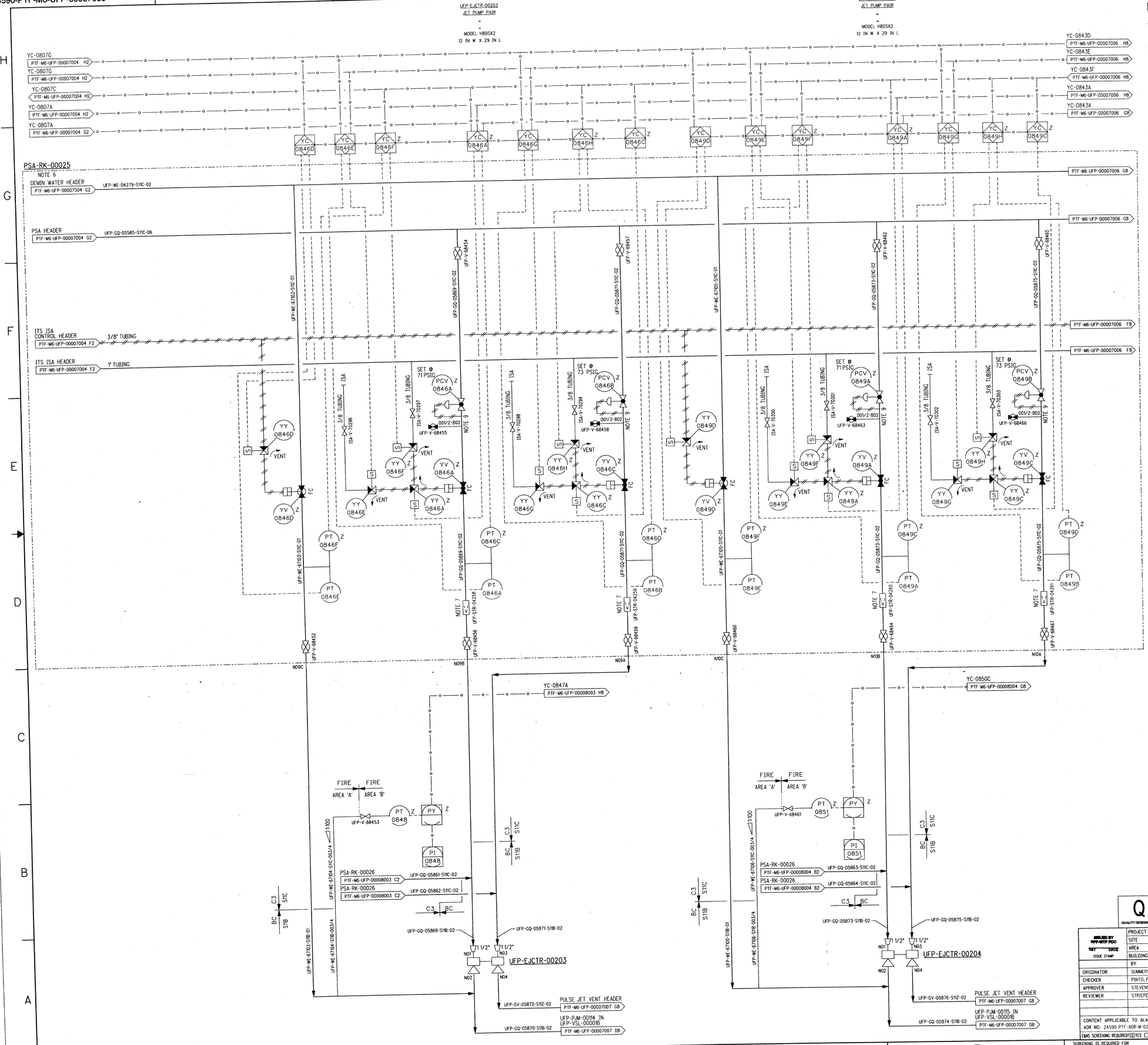

NOTES:

1. SEE DRAWINGS 24590-WTP-M6-50-00001 THROUGH 24590-WTP-M6-50-00008 FOR GENERAL NOTES, SYMBOLS AND LEGEND, AND GENERAL SLOPE REQUIREMENTS.
2. CONTENTS OF THIS DOCUMENT ARE DANGEROUS WASTE PERMIT AFFECTING.
3. THE PRESSURE BOUNDARY FOR ALL COMPONENTS ON THIS DRAWING IS QUALITY LEVEL Q AND SEISMIC CATEGORY SC-I, UNLESS OTHERWISE NOTED. THE PRESSURE BOUNDARY FOR THE NON-SAFETY INSTRUMENT SERVICE AIR (ISA) AND THE CORRESPONDING NON-SAFETY SOLENOID VALVES IT SUPPLIES IS QUALITY LEVEL CM AND SEISMIC CATEGORY SC-IV.
4. ALL LINES SHOWN ON THIS DRAWING SHALL BE FREE DRAINING, EXCEPT BLACK CELL LINES WHICH ARE SELF-DRAINING, UNLESS OTHERWISE NOTED.
5. DELETED
6. ALL TUBING OUTSIDE RACK TO BE FIELD RUN. TUBING ROUTING, SPECIFICATION OF ADDITIONAL IN-TUBING DEVICES, AND TAGGING OF IN-TUBING DEVICES WITHIN THE RACK TO BE DONE IN ACCORDANCE WITH C&I INSTALLATION DETAILS AND DESIGN GUIDE 24590-WTP-GPG-ENG-0142.
7. STRAINER PERMANENTLY INSTALLED.
8. THIS DRAWING IS CONVERTED FROM A SINGLE SHEET TO MULTI-SHEET DRAWINGS AND, IN PART, SUPERSEDES 24590-PTF-M6-UFP-00007 REV 2. THIS IS A MAJOR REVISION, NO REVISION CLOUDS ARE SHOWN. THIS DRAWING MAY INCLUDE INFORMATION FROM 24590-PTF-M6N-M80T-00014, -00015, -00026, -00037, -00038, 24590-PTF-M6N-UFP-00049, AND -00072.
9. RECOMMENDED INSTALLATION FOR THE PCV IS TO CONNECT THE CONTROL LINE TO A STRAIGHT RUN OF PIPE 3 TO 5 FEET DOWNSTREAM OF THE PCV AND TO HAVE A MINIMUM STRAIGHT PIPE RUN OF 3 FEET UPSTREAM AND 4 FEET DOWNSTREAM OF THE PCV.
10. REVISION 1: MAJOR REVISION, NO REVISION CLOUDS ARE SHOWN. FURTHER REVISED TO INCORPORATE 24590-PTF-M6LN-M80T-00004, -00007, -00036, 24590-PTF-M6N-M80T-00102, AND 24590-PTF-M6PR-UFP-00001. INCORPORATE EFRT M-3 DESIGN-INPUT REQUIREMENTS FOR INCREASED NUMBER, ARRANGEMENT, AND PERFORMANCE OF PULSE JET MIXERS. EARMARKED ALL JET PUMP PAIRS (JPP) AND THEIR DRIVERS TO PJM SERVICE IN UFP-VSL-00001B, ADDED JPP AND DRIVES FOR NEW PULSE JET MIXERS (PJM) IN UFP-VSL-00001B, MOVED PWD JPP AND DRIVES TO NEW HLP-RK-00071 AND -00072 RACKS, AND CONVERTED RACK FROM 50 TO 100 PERCENT REDUNDANT TRAIN DESIGN.

HOLD/OPEN ITEMS:

NONE

REFERENCES:

1. DELETED
2. 24590-WTP-3YD-50-00003, SYSTEM DESCRIPTION FOR PULSE JET MIXER AND SPARGER MIXING SUBSYSTEMS.

Please note that source, special nuclear, and byproduct materials, as defined in the Atomic Energy Act of 1954 (AEA) are regulated at the U. S. Department of Energy (DOE) facilities exclusively by DOE, pursuant to its AEA authority. DOE asserts that pursuant to AEA, it has sole and exclusive responsibility and authority to regulate source, special nuclear, and byproduct materials at DOE-owned nuclear facilities. Information regarding materials at DOE-owned nuclear facilities. Information regarding herein on radionuclides is provided for process description purposes only.

REV	DESCRIPTION	ORG	CHKD	RVWD	APVD	DATE
1	REVISED PER NOTE 10	MJ	SJ	JBA	KEL	2/17/11
0	ISSUED FOR CONSTRUCTION SEE NOTE 8	MAS	APP	ES/CL	RS/JM	10/28/08

REVISION HISTORY

Q QUALITY DESIGNATOR

PROJECT No.	24590	
SITE	HANFORD	
AREA	200E	
BUILDING No.	10	
BY		DATE
ORIGINATOR	SUMMERS, MICHAEL	10/23/08
CHECKER	PINTO, PAT	10/23/08
APPROVER	STEVENS, ROBERT	10/28/08
REVIEWER	STRIEPER, EGBERT	10/23/08

ISSUED BY RPP-WTP PDC
TEXT DATE
ISSUE STAMP

CONTENT APPLICABLE TO ALARA? [X] YES [ ] NO
ADR NO. 24590-PTF-ADR-M-02-046 REV: 4
EMS SCREENING REQUIRED? [X] YES [ ] NO EMS INITIAL IF YES

BECHTEL

RIVER PROTECTION PROJECT
WASTE TREATMENT PLANT
2435 STEVENS CENTER PLACE
RICHLAND, WA 99354

CONTRACT No: DE-AC27-01RV14136

P&ID - PTF ULTRAFILTRATION PROCESS SYSTEM UTILITY RACK PSA-RK-00025 UFP-VSL-00001B

SCALE: NONE

24590-PTF-M6-UFP-00007005

REV 1

E SIZE - 44x34
COMPUTER GENERATED - MANUAL DESIGN CHANGES NOT PERMITTED

SCREENING IS REQUIRED FOR DRAWING TYPES IDENTIFIED IN 24590-WTP-GPP-SREG-002

2/16/2011 3:43:17 PM

PLOTTED BY: wmahoney C:\Work\wmahoney\dms03837\PTF\M6UFP00007005.dgn

FORM E_SDN.DGN 02/2009

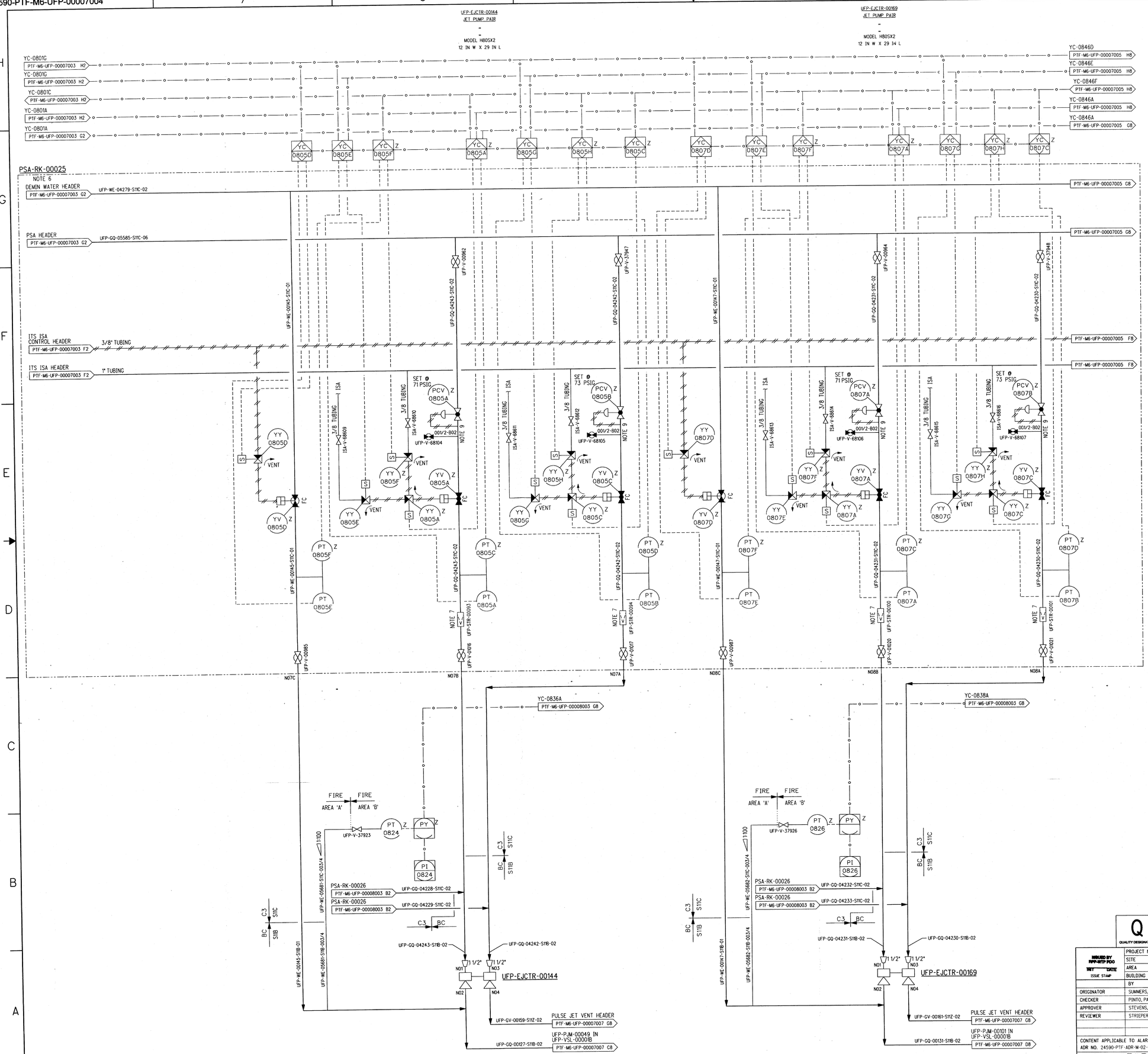

NOTES:

1. SEE DRAWINGS 24590-WTP-M6-50-00001 THROUGH 24590-WTP-M6-50-00008 FOR GENERAL NOTES, SYMBOLS AND LEGEND, AND GENERAL SLOPE REQUIREMENTS.
2. CONTENTS OF THIS DOCUMENT ARE DANGEROUS WASTE PERMIT AFFECTING.
3. THE PRESSURE BOUNDARY FOR ALL COMPONENTS ON THIS DRAWING IS QUALITY LEVEL Q AND SEISMIC CATEGORY SC-I, UNLESS OTHERWISE NOTED. THE PRESSURE BOUNDARY FOR THE NON-SAFETY INSTRUMENT SERVICE AIR (ISA) AND THE CORRESPONDING NON-SAFETY SOLENOID VALVES IT SUPPLIES IS QUALITY LEVEL CM AND SEISMIC CATEGORY SC-IV.
4. ALL LINES SHOWN ON THIS DRAWING SHALL BE FREE DRAINING, EXCEPT BLACK CELL LINES WHICH ARE SELF-DRAINING, UNLESS OTHERWISE NOTED.
5. DELETED
6. ALL TUBING OUTSIDE RACK TO BE FIELD RUN. TUBING ROUTING, SPECIFICATION OF ADDITIONAL IN-TUBING DEVICES, AND TAGGING OF IN-TUBING DEVICES WITHIN THE RACK TO BE DONE IN ACCORDANCE WITH C&I INSTALLATION DETAILS AND DESIGN GUIDE 24590-WTP-GPG-ENG-0142.
7. STRAINER PERMANENTLY INSTALLED.
8. THIS DRAWING IS CONVERTED FROM A SINGLE SHEET TO MULTI-SHEET DRAWINGS AND, IN PART, SUPERSEDES 24590-PTF-M6-UFP-00007 REV 2. THIS IS A MAJOR REVISION, NO REVISION CLOUDS ARE SHOWN. THIS DRAWING MAY INCLUDE INFORMATION FROM 24590-PTF-M6N-M80T-00014, -00015, -00026, -00037, -00038, 24590-PTF-M6N-UFP-00049, AND -00072.
9. RECOMMENDED INSTALLATION FOR THE PCV IS TO CONNECT THE CONTROL LINE TO A STRAIGHT RUN OF PIPE 3 TO 5 FEET DOWNSTREAM OF THE PCV AND TO HAVE A MINIMUM STRAIGHT PIPE RUN OF 3 FEET UPSTREAM AND 4 FEET DOWNSTREAM OF THE PCV.
10. REVISION 1: MAJOR REVISION, NO REVISION CLOUDS ARE SHOWN. INCORPORATED 24590-PTF-M6LN-M80T-00004, -00007, -00036, 24590-PTF-M6N-M80T-00102, AND 24590-PTF-M6PR-UFP-00001. FURTHER REVISED TO INCORPORATE EFRT M-3 DESIGN-INPUT REQUIREMENTS FOR INCREASED NUMBER, ARRANGEMENT, AND PERFORMANCE OF PULSE JET MIXERS. EARMARKED ALL JET PUMP PAIRS (JPP) AND THEIR DRIVERS TO PJM SERVICE IN UFP-VSL-00001B, ADDED JPP AND DRIVES FOR NEW PULSE JET MIXERS (PJM) IN UFP-VSL-00001B, MOVED PWD JPP AND DRIVES TO NEW HLP-RK-00071 AND -00072 RACKS, AND CONVERTED RACK FROM 50 TO 100 PERCENT REDUNDANT TRAIN DESIGN. CHANGED JPP MODEL NUMBER.

HOLD/OPEN ITEMS:

NONE

REFERENCES:

1. DELETED
2. 24590-WTP-3YD-50-00003, SYSTEM DESCRIPTION FOR PULSE JET MIXER AND SPARGER MIXING SUBSYSTEMS.

Please note that source, special nuclear, and byproduct materials, as defined by the Atomic Energy Act of 1954 (AEA) are regulated at the U. S. Department of Energy (DOE) facilities exclusively by DOE acting pursuant to its AEA authority. DOE asserts that pursuant to AEA, it has sole and exclusive regulatory authority to regulate source, special nuclear, and byproduct materials at these facilities. Any information contained herein on radionuclides is provided for process description purposes only.

REV	DESCRIPTION	ORG	CHKD	RVWD	APVD	DATE
1	REVISED PER NOTE 10					2/17/11
0	ISSUED FOR CONSTRUCTION SEE NOTE 8	MAS	APP	ES/CL	RS/JM	10/28/08

Q QUALITY DESIGNATOR

REVISION HISTORY

ISSUED BY RPP-WTP PDO — 1ST ISSUE STAMP

PROJECT No.	24590	
SITE	HANFORD	
AREA	200E	
BUILDING No.	10	
	BY	DATE
ORIGINATOR	SUMMERS, MICHAEL	10/23/08
CHECKER	PINTO, PAT	10/23/08
APPROVER	STEVENS, ROBERT	10/28/08
REVIEWER	STRIEPER, EGBERT	10/23/08

CONTENT APPLICABLE TO ALARA? [X] YES [ ] NO

ADR NO. 24590-PTF-ADR-M-02-046 REV: 4

EMS SCREENING REQUIRED? [X] YES [ ] NO EMS INITIAL IF YES

RIVER PROTECTION PROJECT
WASTE TREATMENT PLANT
2435 STEVENS CENTER PLACE
RICHLAND, WA 99354

CONTRACT No: DE-AC27-01RV14136

P&ID - PTF ULTRAFILTRATION PROCESS SYSTEM UTILITY RACK PSA-RK-00025 UFP-VSL-00001B

SCALE: NONE

24590-PTF-M6-UFP-00007004

REV 1

SCREENING IS REQUIRED FOR DRAWING TYPES IDENTIFIED IN 24590-WTP-GPP-SREG-002

'E' SIZE - 44x34
COMPUTER GENERATED - MANUAL DESIGN CHANGES NOT PERMITTED

2/16/2011 3:40:33 PM

PLOTTED BY: wmahoney C:\Work\wmahoney\dms03837\PTF\M6\PF0000700 4.dgn

FORM E_SDN.DGN 02/2009

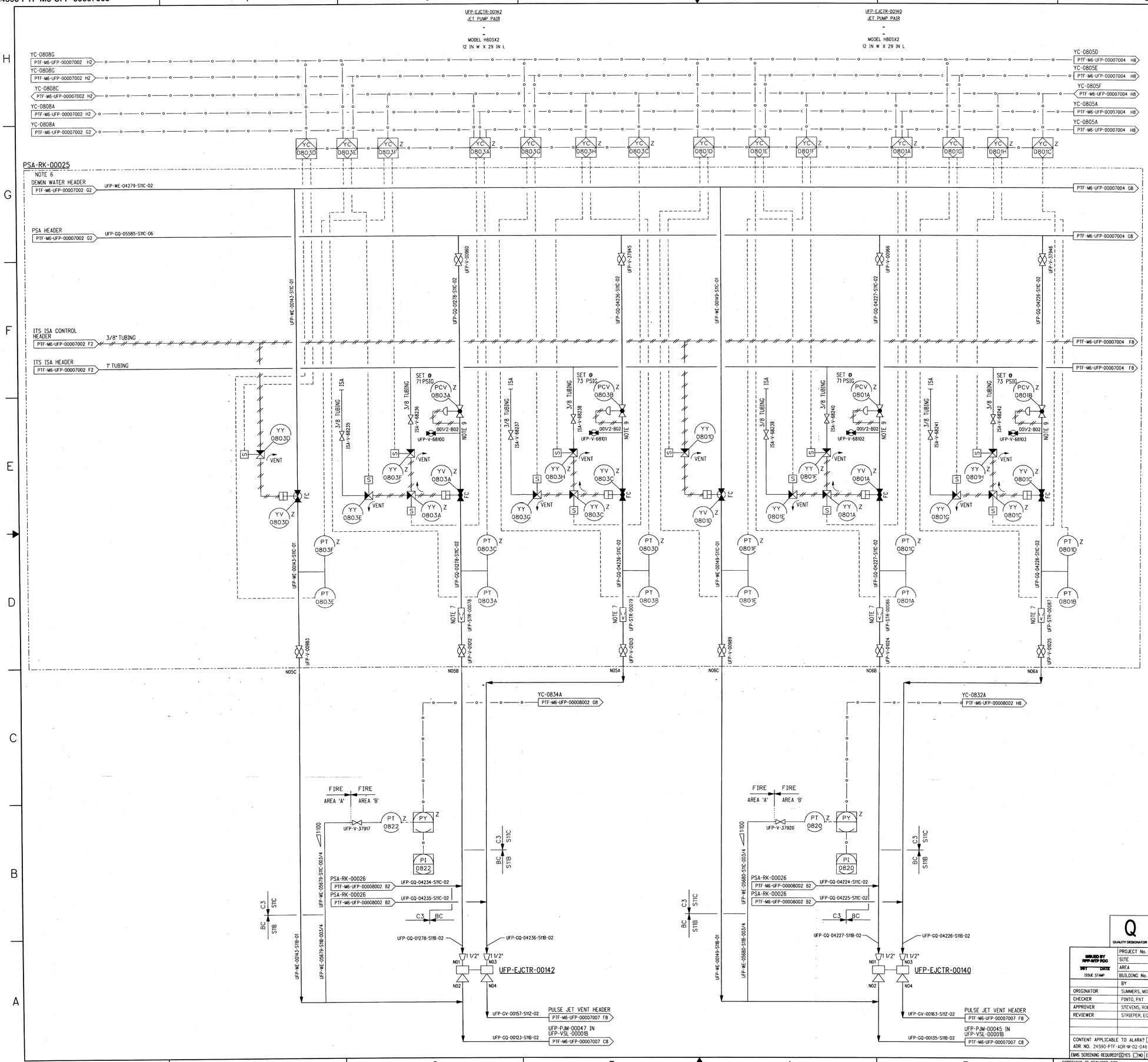

NOTES:

1. SEE DRAWINGS 24590-WTP-M6-50-00001 THROUGH 24590-WTP-M6-50-00008 FOR GENERAL NOTES, SYMBOLS AND LEGEND, AND GENERAL SLOPE REQUIREMENTS.
2. CONTENTS OF THIS DOCUMENT ARE DANGEROUS WASTE PERMIT AFFECTING.
3. THE PRESSURE BOUNDARY FOR ALL COMPONENTS ON THIS DRAWING IS QUALITY LEVEL Q AND SEISMIC CATEGORY SC-I, UNLESS OTHERWISE NOTED. THE PRESSURE BOUNDARY FOR THE NON-SAFETY INSTRUMENT SERVICE AIR (ISA) AND THE CORRESPONDING NON-SAFETY SOLENOID VALVES IT SUPPLIES IS QUALITY LEVEL CM AND SEISMIC CATEGORY SC-IV.
4. ALL LINES SHOWN ON THIS DRAWING SHALL BE FREE DRAINING, EXCEPT BLACK CELL LINES WHICH ARE SELF-DRAINING, UNLESS OTHERWISE NOTED.
5. DELETED
6. ALL TUBING OUTSIDE RACK TO BE FIELD RUN. TUBING ROUTING, SPECIFICATION OF ADDITIONAL IN-TUBING DEVICES, AND TAGGING OF IN-TUBING DEVICES WITHIN THE RACK TO BE DONE IN ACCORDANCE WITH C&I INSTALLATION DETAILS AND DESIGN GUIDE 24590-WTP-GPG-ENG-0142.
7. STRAINER PERMANENTLY INSTALLED.
8. THIS DRAWING IS CONVERTED FROM A SINGLE SHEET TO MULTI-SHEET DRAWINGS AND, IN PART, SUPERSEDES 24590-PTF-M6-UFP-00007 REV 2. THIS IS A MAJOR REVISION, NO REVISION CLOUDS ARE SHOWN. THIS DRAWING MAY INCLUDE INFORMATION FROM 24590-PTF-M6N-M80T-00014, -00015, -00026, -00037, -00038, 24590-PTF-M6N-UFP-00049, AND -00072.
9. RECOMMENDED INSTALLATION FOR THE PCV IS TO CONNECT THE CONTROL LINE TO A STRAIGHT RUN OF PIPE 3 TO 5 FEET DOWNSTREAM OF THE PCV AND TO HAVE A MINIMUM STRAIGHT PIPE RUN OF 3 FEET UPSTREAM AND 4 FEET DOWNSTREAM OF THE PCV.
10. REVISION 1: MAJOR REVISION, NO REVISION CLOUDS ARE SHOWN. INCORPORATED 24590-PTF-M6LN-M80T-00004, -00007, -00036, 24590-PTF-M6N-M80T-00102, AND 24590-PTF-M6PR-UFP-00001. FURTHER REVISED TO INCORPORATE EFRT M-3 DESIGN-INPUT REQUIREMENTS FOR INCREASED NUMBER, ARRANGEMENT, AND PERFORMANCE OF PULSE JET MIXERS. EARMARKED ALL JET PUMP PAIRS (JPP) AND THEIR DRIVERS TO PJM SERVICE IN UFP-VSL-00001B, ADDED JPP AND DRIVES FOR NEW PULSE JET MIXERS (PJM) IN UFP-VSL-00001B, MOVED PWD JPP AND DRIVES TO NEW HLP-RK-00071 AND -00072 RACKS, AND CONVERTED RACK FROM 50 TO 100 PERCENT REDUNDANT TRAIN DESIGN. CHANGED JPP MODEL NUMBER.

HOLD/OPEN ITEMS:

NONE

REFERENCES:

1. DELETED
2. 24590-WTP-3YD-50-00003, SYSTEM DESCRIPTION FOR PULSE JET MIXER AND SPARGER MIXING SUBSYSTEMS.

Please note that source, special nuclear, and byproduct materials, as defined in the Atomic Energy Act of 1954 (AEA) are regulated at the U. S. Department of Energy (DOE) facilities exclusively by DOE acting pursuant to its AEA authority. DOE asserts that the AEA and DOE orders, not the Washington State Department of Ecology authority to regulate source, special nuclear, and byproduct materials at DOE-owned nuclear facilities. Information contained herein on radionuclides is provided for process description purposes only.

REV	DESCRIPTION	ORG	CHKD	RVWD	APVD	DATE
1	REVISED PER NOTE 10		SJ			2/17/11
0	ISSUED FOR CONSTRUCTION SEE NOTE 8	MAS	APP	ES/CL	RS/JM	10/28/08

Q QUALITY DESIGNATOR

REVISION HISTORY

ISSUED BY RPP-WTP PDC — INIT DATE — ISSUE STAMP

PROJECT No.	24590	
SITE	HANFORD	
AREA	200E	
BUILDING No.	10	
	BY	DATE
ORIGINATOR	SUMMERS, MICHAEL	10/22/08
CHECKER	PINTO, PAT	10/22/08
APPROVER	STEVENS, ROBERT	10/23/08
REVIEWER	STRIEPER, EGBERT	10/28/08

CONTENT APPLICABLE TO ALARA? [X] YES [ ] NO
ADR NO. 24590-PTF-ADR-M-02-046 REV: 4
EMS SCREENING REQUIRED? [X] YES [ ] NO EMS INITIAL IF YES

SCREENING IS REQUIRED FOR DRAWING TYPES IDENTIFIED IN 24590-WTP-GPP-SREQ-002

RIVER PROTECTION PROJECT
WASTE TREATMENT PLANT
2435 STEVENS CENTER PLACE
RICHLAND, WA 99354

CONTRACT No: DE-AC27-01RV14136

P&ID - PTF ULTRAFILTRATION PROCESS SYSTEM UTILITY RACK PSA-RK-00025 UFP-VSL-00001B

SCALE: NONE
E-SIZE - 44x34
COMPUTER GENERATED - MANUAL DESIGN CHANGES NOT PERMITTED
24590-PTF-M6-UFP-00007003
REV 1

R11333763

2/16/2011 3:38:16 PM

PLOTTED BY: wmahoney C:\Work\wmahoney\dms03837\PTFMG\PF00007003.dgn

FORM E_SDN.DGN 02/2009

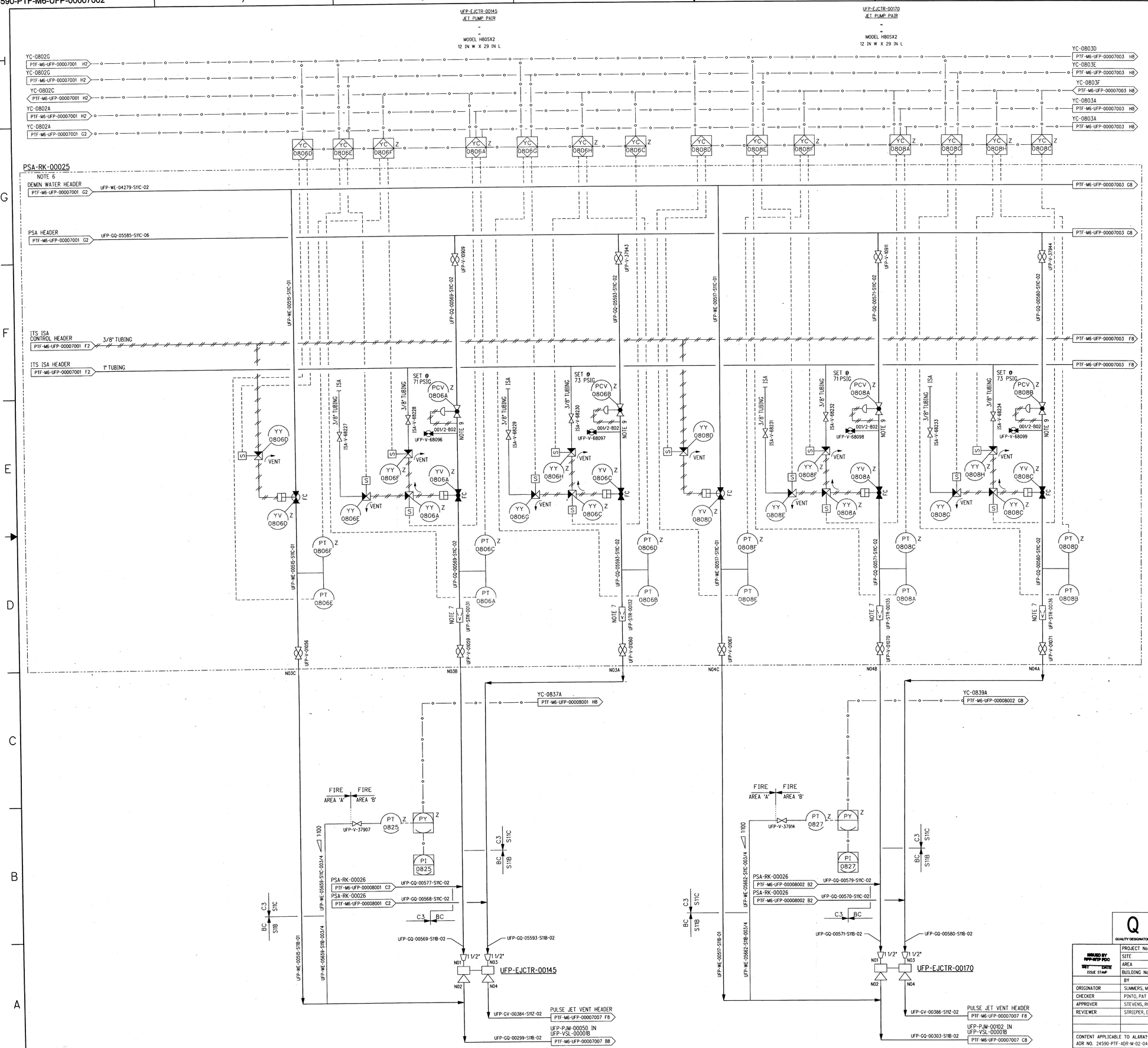

NOTES:

1. SEE DRAWINGS 24590-WTP-M6-50-00001 THROUGH 24590-WTP-M6-50-00008 FOR GENERAL NOTES, SYMBOLS AND LEGEND, AND GENERAL SLOPE REQUIREMENTS.
2. CONTENTS OF THIS DOCUMENT ARE DANGEROUS WASTE PERMIT AFFECTING.
3. THE PRESSURE BOUNDARY FOR ALL COMPONENTS ON THIS DRAWING IS QUALITY LEVEL Q AND SEISMIC CATEGORY SC-I, UNLESS OTHERWISE NOTED. THE PRESSURE BOUNDARY FOR THE NON-SAFETY INSTRUMENT SERVICE AIR (ISA) AND THE CORRESPONDING NON-SAFETY SOLENOID VALVES IT SUPPLIES IS QUALITY LEVEL CM AND SEISMIC CATEGORY SC-IV.
4. ALL LINES SHOWN ON THIS DRAWING SHALL BE FREE DRAINING, EXCEPT BLACK CELL LINES WHICH ARE SELF-DRAINING, UNLESS OTHERWISE NOTED.
5. DELETED
6. ALL TUBING OUTSIDE RACK TO BE FIELD RUN. TUBING ROUTING, SPECIFICATION OF ADDITIONAL IN-TUBING DEVICES, AND TAGGING OF IN-TUBING DEVICES WITHIN THE RACK TO BE DONE IN ACCORDANCE WITH C&I INSTALLATION DETAILS AND DESIGN GUIDE 24590-WTP-GPG-ENG-0142.
7. STRAINER PERMANENTLY INSTALLED.
8. THIS DRAWING IS CONVERTED FROM A SINGLE SHEET TO MULTI-SHEET DRAWINGS AND, IN PART, SUPERSEDES 24590-PTF-M6-UFP-00007 REV 2. THIS IS A MAJOR REVISION, NO REVISION CLOUDS ARE SHOWN. THIS DRAWING MAY INCLUDE INFORMATION FROM 24590-PTF-M6N-M80T-00014, -00015, -00026, -00037, -00038, 24590-PTF-M6N-UFP-00049, AND -00072.
9. RECOMMENDED INSTALLATION FOR THE PCV IS TO CONNECT THE CONTROL LINE TO A STRAIGHT RUN OF PIPE 3 TO 5 FEET DOWNSTREAM OF THE PCV AND TO HAVE A MINIMUM STRAIGHT PIPE RUN OF 3 FEET UPSTREAM AND 4 FEET DOWNSTREAM OF THE PCV.
10. REVISION 1: MAJOR REVISION, NO REVISION CLOUDS ARE SHOWN. INCORPORATED 24590-PTF-M6LN-M80T-00004, -00007, -00036, 24590-PTF-M6LN-UFP-00011, 24590-PTF-M6N-M80T-00102, AND 24590-PTF-M6PR-UFP-00001. FURTHER REVISED TO INCORPORATE EFRT M-3 DESIGN-INPUT REQUIREMENTS FOR INCREASED NUMBER, ARRANGEMENT, AND PERFORMANCE OF PULSE JET MIXERS. EARMARKED ALL JET PUMP PAIRS (JPP) AND THEIR DRIVERS TO PJM SERVICE IN UFP-VSL-00001B, ADDED JPP AND DRIVES FOR NEW PULSE JET MIXERS (PJM) IN UFP-VSL-00001B, MOVED PWD JPP AND DRIVES TO NEW HLP-RK-00071 AND -00072 RACKS, AND CONVERTED RACK FROM 50 TO 100 PERCENT REDUNDANT TRAIN DESIGN. CHANGED JPP MODEL NUMBER.

HOLD/OPEN ITEMS:

NONE

REFERENCES:

1. DELETED
2. 24590-WTP-3YD-50-00003, SYSTEM DESCRIPTION FOR PULSE JET MIXER AND SPARGER MIXING SUBSYSTEMS.

Please note that source, special nuclear, and byproduct materials, as defined in the Atomic Energy Act of 1954 (AEA) are regulated by the U.S. Nuclear Regulatory Commission (NRC) facilities exempted by DOE acting pursuant to its AEA authority. DOE asserts that pursuant to AEA, it has sole and exclusive responsibility and authority to regulate source, special nuclear, and byproduct materials at DOE-owned nuclear facilities. Information contained herein on radionuclides is provided for process description purposes only.

REV	DESCRIPTION	ORG	CHKD	RVWD	APVD	DATE
1	REVISED PER NOTE 10					2/17/11
0	ISSUED FOR CONSTRUCTION SEE NOTE 9	MAS	APP	ES/CL	RS/JM	10/28/08

Q — QUALITY DESIGNATOR

REVISION HISTORY

ISSUED BY RPP-WTP PDC — ISSUE STAMP

PROJECT No.	24590	
SITE	HANFORD	
AREA	200E	
BUILDING No.	10	
	BY	DATE
ORIGINATOR	SUMMERS, MICHAEL	10/22/08
CHECKER	PINTO, PAT	10/22/08
APPROVER	STEVENS, ROBERT	10/28/08
REVIEWER	STRIEPER, EGBERT	10/23/08

CONTENT APPLICABLE TO ALARA? [X] YES [ ] NO
ADR NO. 24590-PTF-ADR-M-02-046 REV: 4
EMS SCREENING REQUIRED? [X] YES [ ] NO EMS INITIAL IF YES

RIVER PROTECTION PROJECT
WASTE TREATMENT PLANT
2435 STEVENS CENTER PLACE
RICHLAND, WA 99354

CONTRACT No: DE-AC27-01RV14136

P&ID - PTF ULTRAFILTRATION PROCESS SYSTEM UTILITY RACK PSA-RK-00025 UFP-VSL-00001B

SCALE: NONE

24590-PTF-M6-UFP-00007002

REV 1

"E" SIZE - 44x34
COMPUTER GENERATED - MANUAL DESIGN CHANGES NOT PERMITTED

SCREENING IS REQUIRED FOR DRAWING TYPES IDENTIFIED IN 24590-WTP-GPP-SREG-002

FORM E_SDN.DGN 02/2009

2/16/2011 3:34:52 PM

PLOTTED BY: wmahoney C:\Work\wmahoney\dms03837\PTFM6UFP00007002.dgn

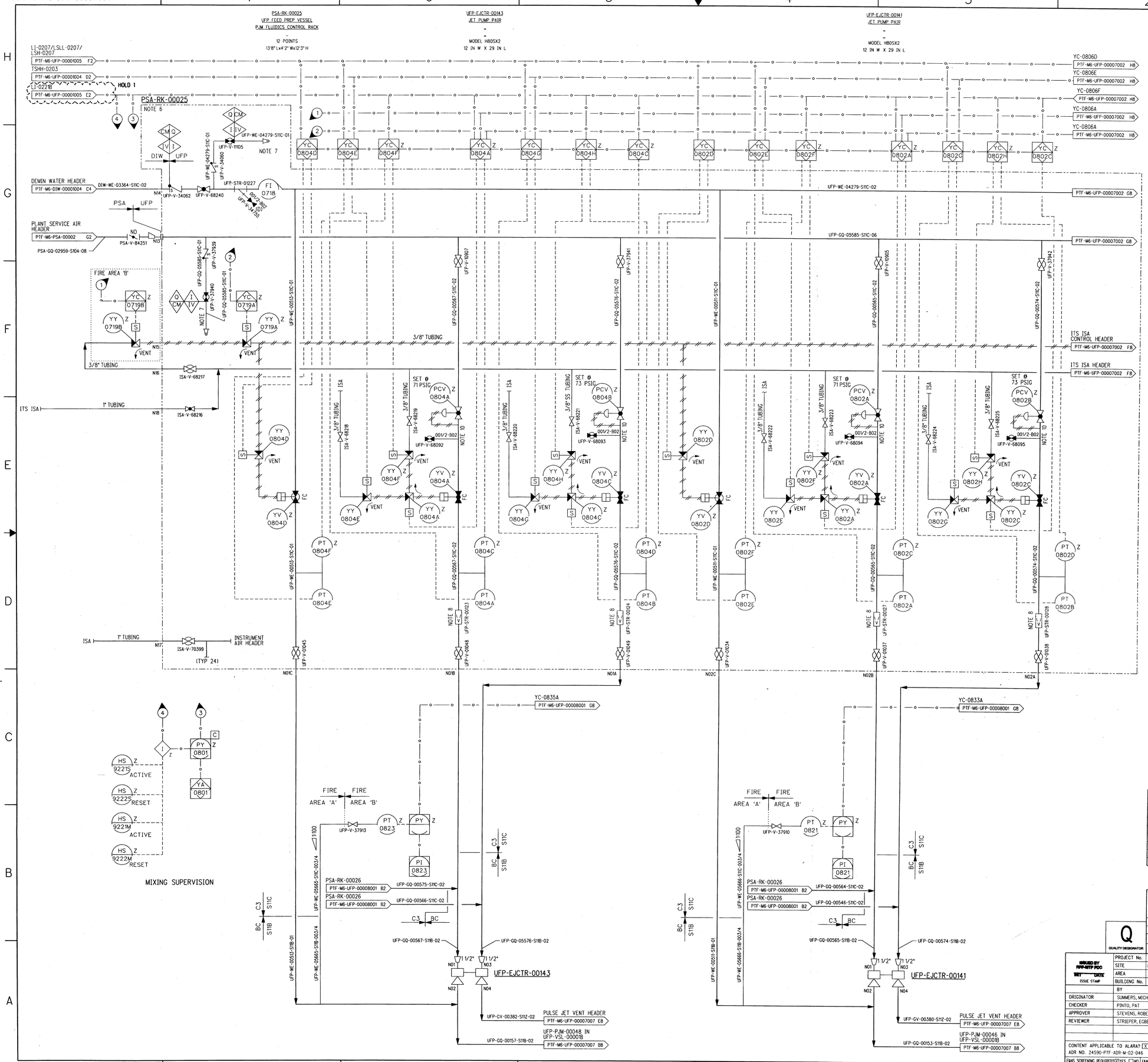

NOTES:

1. SEE DRAWINGS 24590-WTP-M6-50-00001 THROUGH 24590-WTP-M6-50-00008 FOR GENERAL NOTES, SYMBOLS AND LEGEND, AND GENERAL SLOPE REQUIREMENTS.
2. CONTENTS OF THIS DOCUMENT ARE DANGEROUS WASTE PERMIT AFFECTING.
3. THE PRESSURE BOUNDARY FOR ALL COMPONENTS ON THIS DRAWING IS QUALITY LEVEL Q AND SEISMIC CATEGORY SC-I, UNLESS OTHERWISE NOTED. THE PRESSURE BOUNDARY FOR THE NON-SAFETY INSTRUMENT SERVICE AIR (ISA) AND THE CORRESPONDING NON-SAFETY SOLENOID VALVES IT SUPPLIES IS QUALITY LEVEL CM AND SEISMIC CATEGORY SC-IV.
4. ALL LINES SHOWN ON THIS DRAWING SHALL BE FREE DRAINING, EXCEPT BLACK CELL LINES WHICH ARE SELF-DRAINING, UNLESS OTHERWISE NOTED.
5. DELETED
6. ALL TUBING OUTSIDE RACK TO BE FIELD RUN. TUBING ROUTING, SPECIFICATION OF ADDITIONAL IN-TUBING DEVICES, AND TAGGING OF IN-TUBING DEVICES WITHIN THE RACK TO BE DONE IN ACCORDANCE WITH C&I INSTALLATION DETAILS AND DESIGN GUIDE 24590-WTP-GPG-ENG-0412.
7. CONNECTION PROVIDED FOR REAGENTS, PLANT WASH, AND SERVICE AIR.
8. STRAINER PERMANENTLY INSTALLED.
9. THIS DRAWING IS CONVERTED FROM A SINGLE SHEET TO MULTI-SHEET DRAWINGS AND, IN PART, SUPERSEDES 24590-PTF-M6-UFP-00007 REV 2. THIS IS A MAJOR REVISION, NO REVISION CLOUDS ARE SHOWN. THIS DRAWING MAY INCLUDE INFORMATION FROM 24590-PTF-M6N-M80T-00014, -00015, -00026, -00037, -00038, 24590-PTF-M6N-UFP-00049, AND -00072.
10. RECOMMENDED INSTALLATION FOR THE PCV IS TO CONNECT THE CONTROL LINE TO A STRAIGHT RUN OF PIPE 3 TO 5 FEET DOWNSTREAM OF THE PCV AND TO HAVE MINIMUM STRAIGHT PIPE RUN OF 3 FEET UPSTREAM AND 4 FEET DOWNSTREAM OF THE PCV.
11. REVISION 1: MAJOR REVISION, NO REVISION CLOUDS ARE SHOWN INCORPORATED 24590-PTF-M6LN-M80T-00004, -00007, -00033, -00036, 24590-PTF-M6N-M80T-00057, -00102, AND 24590-PTF-M6PR-UFP-00001. FURTHER REVISED TO INCORPORATE EFRT M-3 DESIGN-INPUT REQUIREMENTS FOR INCREASED NUMBER, ARRANGEMENT, AND PERFORMANCE OF PULSE JET MIXERS. EARMARKED ALL JET PUMP PAIRS (JPP) AND THEIR DRIVERS TO PJM SERVICE IN UFP-VSL-00001B, ADDED JPP AND DRIVES FOR NEW PULSE JET MIXERS (PJM) IN UFP-VSL-00001B, MOVED PWD JPP AND DRIVES TO NEW HLP-RK-00071 AND -00072 RACKS, AND CONVERTED RACK FROM 50 TO 100 PERCENT REDUNDANT TRAIN DESIGN. CHANGED JPP MODEL NUMBER.

HOLD/OPEN ITEMS:

1. PENDING SAFETY-RELATED MIXING DESIGN.

REFERENCES:

1. DELETED
2. 24590-WTP-3YD-50-00003, SYSTEM DESCRIPTION FOR PULSE JET MIXER AND SPARGER MIXING SUBSYSTEMS.

Please note that source, special nuclear, and byproduct materials, as defined in the Atomic Energy Act of 1954 (AEA) are regulated at the U. S. Department of Energy (DOE) facilities by DOE acting pursuant to its AEA authority. DOE assumes, pursuant to AEA, it has sole and exclusive responsibility and authority regarding regulation of source, special nuclear, and byproduct materials at DOE-owned nuclear facilities. Information contained herein on radionuclides is provided for process description purposes only.

DRAWING INDEX

DWG NO	TITLE
24590-PTF-M6-UFP-00007001	UFP SYSTEM PSA-RK-00025 UFP-VSL-00001B
24590-PTF-M6-UFP-00007002	UFP SYSTEM PSA-RK-00025 UFP-VSL-00001B
24590-PTF-M6-UFP-00007003	UFP SYSTEM PSA-RK-00025 UFP-VSL-00001B
24590-PTF-M6-UFP-00007004	UFP SYSTEM PSA-RK-00025 UFP-VSL-00001B
24590-PTF-M6-UFP-00007005	UFP SYSTEM PSA-RK-00025 UFP-VSL-00001B
24590-PTF-M6-UFP-00007006	UFP SYSTEM PSA-RK-00025 UFP-VSL-00001B
24590-PTF-M6-UFP-00007007	VESSEL PJM UFP-VSL-00001B

REVISION HISTORY

REV	DESCRIPTION	ORG	CHKD	RVWD	APVD	DATE
1	REVISED PER NOTE 11					
0	ISSUED FOR CONSTRUCTION SEE NOTE 9	MAS	APP	ES/CL	RS/JM	10/28/08

Q — QUALITY DESIGNATOR

ISSUED BY RPP-WTP PDC — INIT — DATE — ISSUE STAMP

PROJECT No.	24590	
SITE	HANFORD	
AREA	200E	
BUILDING No.	10	
	BY	DATE
ORIGINATOR	SUMMERS, MICHAEL	10/22/08
CHECKER	PINTO, PAT	10/22/08
APPROVER	STEVENS, ROBERT	10/28/08
REVIEWER	STRIEPER, EGBERT	10/23/08

CONTENT APPLICABLE TO ALARA? [X] YES [ ] NO
ADR NO. 24590-PTF-ADR-M-02-046 REV: 4
EMAS SCREENING REQUIRED? [X] YES [ ] NO EMAS INITIAL IF YES

BECHTEL
RIVER PROTECTION PROJECT
WASTE TREATMENT PLANT
2435 STEVENS CENTER PLACE
RICHLAND, WA 99354

CONTRACT No: DE-AC27-01RV14136

P&ID - PTF ULTRAFILTRATION PROCESS SYSTEM UTILITY RACK PSA-RK-00025 UFP-VSL-00001B

SCALE: NONE

24590-PTF-M6-UFP-00007001

REV 1

SCREENING IS REQUIRED FOR DRAWING TYPES IDENTIFIED IN 24590-WTP-GPP-SREQ-002

E SIZE - 44x34
COMPUTER GENERATED - MANUAL DESIGN CHANGES NOT PERMITTED

2/16/2011 3:32:04 PM

FORM E_SDN.DGN 02/2009

PLOTTED BY: wmchaney C:\Work\wmchaney\dms038337\PTF\Ed\P00007001.dgn

24590-PTF-M6-UFP-00027007

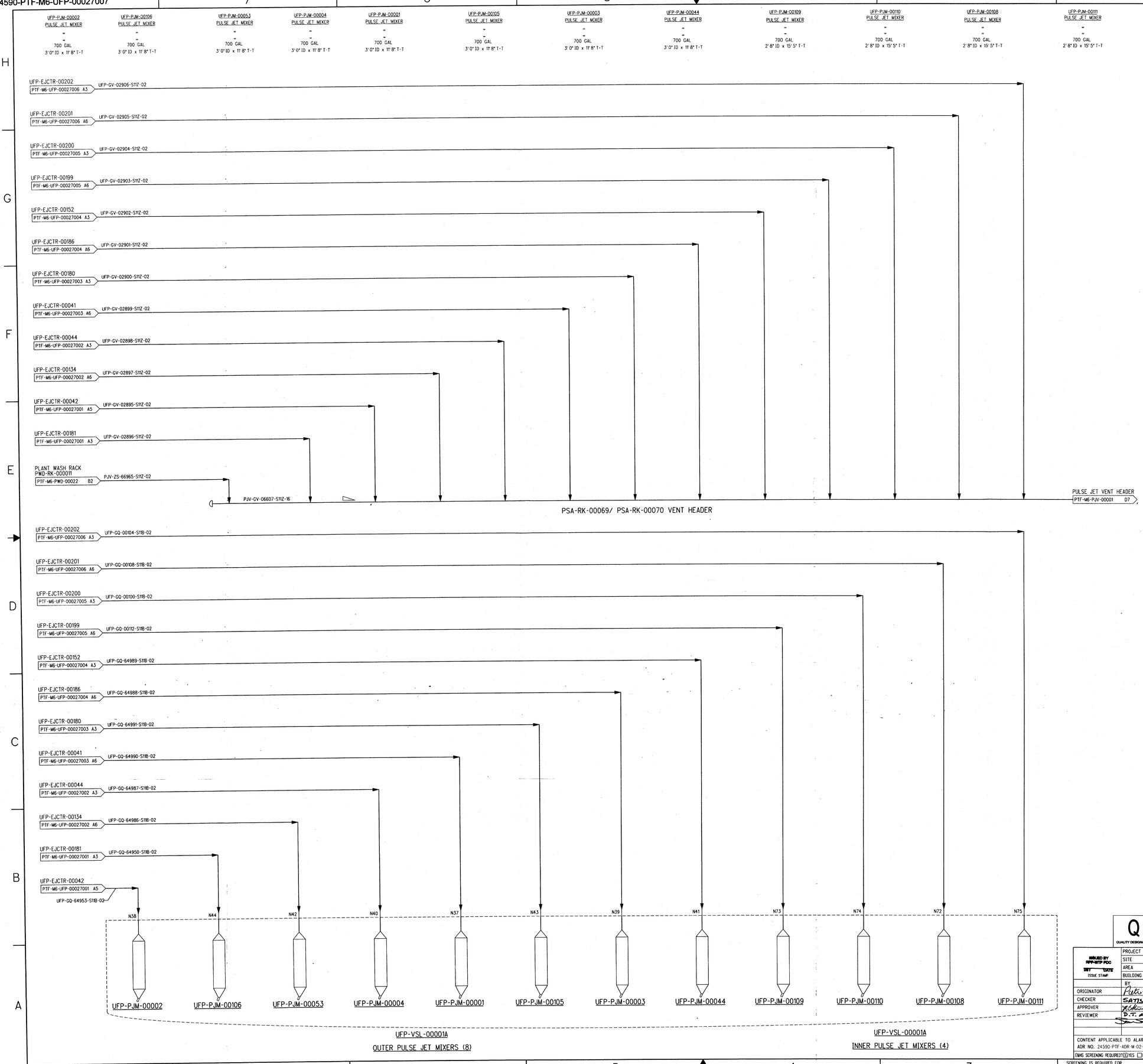

NOTES:

1. SEE DRAWINGS 24590-WTP-M6-50-00001 THROUGH 24590-WTP-M6-50-00008 FOR GENERAL NOTES, SYMBOLS AND LEGEND, AND GENERAL SLOPE REQUIREMENTS.
2. CONTENTS OF THIS DOCUMENT ARE DANGEROUS WASTE PERMIT AFFECTING.
3. THE PRESSURE BOUNDARY FOR ALL COMPONENTS ON THIS DRAWING IS QUALITY LEVEL Q AND SEISMIC CATEGORY SC-I, UNLESS OTHERWISE NOTED.
4. ALL LINES ON THIS DRAWING ARE LOCATED IN THE BLACK CELL AND SHALL BE SELF-DRAINING, UNLESS OTHERWISE NOTED.

HOLD/OPEN ITEMS:

NONE

REFERENCES:

1. 24590-WTP-3YD-50-00003, SYSTEM DESCRIPTION FOR PULSE JET MIXER AND SPARGER MIXING SUBSYSTEMS.

Please note that source, special nuclear, and byproduct materials, as defined in the Atomic Energy Act of 1954 (AEA) are regulated at the U.S. Department of Energy (DOE) facilities exclusively by DOE pursuant to its AEA authority. DOE asserts that pursuant to AEA, it has sole and exclusive responsibility and authority to regulate nuclear safety and radiation protection materials at DOE-owned nuclear facilities. Information contained herein on radionuclides is provided for process description purposes only.

REV	DESCRIPTION	ORG	CHKD	RVWD	APVD	DATE
0	ISSUED FOR CONSTRUCTION	DH	SJ	SGO	MA	2/17/11

REVISION HISTORY

Q QUALITY DESIGNATOR

ISSUED BY RPP-WTP PDC BY DATE ISSUE STAMP

	BY	DATE
ORIGINATOR	Peter Martinez	2/10/11
CHECKER	SATISH JAIN	2/10/11
APPROVER	Mike Abbott	2/17/11
REVIEWER	D.T. Allison	2-17-11
		2/17/11

CONTENT APPLICABLE TO ALARA? [X] YES [ ] NO
ADR NO. 24590-PTF-ADR-M-02-046 REV: 4
EMS SCREENING REQUIRED? [X] YES [ ] NO EMS INITIAL IF YES:

PROJECT No. 24590
SITE HANFORD
AREA 200E
BUILDING No. 10

BECHTEL

RIVER PROTECTION PROJECT
WASTE TREATMENT PLANT
2435 STEVENS CENTER PLACE
RICHLAND, WA 99354

CONTRACT No: DE-AC27-01RV14136

P&ID - PTF ULTRAFILTRATION PROCESS SYSTEM - VESSEL PJM UFP-VSL-00001A

SCALE: NONE

24590-PTF-M6-UFP-00027007

REV 0

SCREENING IS REQUIRED FOR DRAWING TYPES IDENTIFIED IN 24590-WTP-GPP-SREQ-002

"E" SIZE - 44x34
COMPUTER GENERATED - MANUAL DESIGN CHANGES NOT PERMITTED

M15337B2

2/10/2011 10:23:31 AM

C:\Work\eden\ems03813\PTF\M6\UFP00027007.dgn

PLOTTED BY: edorn

FORM E_SDN.DGN 02/2009

Quarter Ending 09/30/2011 24590-WTP-PCN-ENV-11-002

Hanford Facility RCRA Permit Modification Notification Form
Part III, Operating Unit 10
Waste Treatment and Immobilization Plant

Index

Page 2 of 2: Hanford Facility RCRA Permit, Part III, Operating Unit 10, Waste Treatment and Immobilization Plant

Update the Engineering Specification for Vessel-Mounted Vertical Transfer Pumps - WTP HLW Facility in Appendix 10.7 of the Dangerous Waste Permit (DWP). In addition, this specification was changed from an HLW to a WTP document and should be moved from Appendix 10.7 to Appendix 7.7 of the permit.

Submitted by Co-Operator:

BTAllen for DBusche 7/6/11

D. M. Busche Date

Reviewed by ORP Program Office:

8/4/11

D. L. Noyes Date

Quarter Ending 09/30/2011

24590-WTP-PCN-ENV-11-002

Hanford Facility RCRA Permit Modification Notification Form

Unit:	Permit Part:
Waste Treatment and Immobilization Plant	**Part III, Operating Unit 10**

Description of Modification:

The purpose of this Class 1 modification is to replace the permitted Engineering Specification for Vessel-Mounted Vertical Transfer Pumps in the HLW Facility with the updated WTP source specification.

The following engineering document is submitted to replace the permitting document currently in Appendix 10.7:

Appendix 10.7		Appendix 7.7	
Replace	24590-HLW-3PS-MPC0-TP009, Rev. 1	With	24590-WTP-3PS-MPC0-T0009, Rev. 2

This modification requests Ecology approval and incorporation into the permit the specific changes to this engineering specification that are identified in Revision History of the specification that have been issued since the last revision of the permit-version. Revisions are the result of ongoing design. The following identifies the significant changes on the attached document:

- Upgraded the Quality Level of the specification from CM to Q
- Removed Export Controlled Information
- Clarified Quality Level of pumps versus HFP piping/interface as noted
- Modified Section 2.1.2 to allow acceptable material standards to be used for commercial procurements
- Updated the radiation dose rate in accordance with calculation 24590-HLW-Z0C-30-00011 issued March 29, 2004

In addition, it is requested that Ecology:

- Remove 24590-HLW-3PS-MPC0-TP009, Rev. 1 from Appendix 10.7 and replace it with 24590-WTP-3PS-MPC0-T0009, Rev. 2 in Appendix 7.7

This modification requests Ecology approval and incorporation of the following outstanding change document(s) into the permit. Although not yet incorporated into the revised documents included in this PCN, the listed change document(s) are intended to be incorporated into the permit:

None

WAC 173-303-830 Modification Class:	Class 1	Class 1[1]	Class 2	Class 3
Please mark the Modification Class:	X			

Enter relevant WAC 173-303-830, Appendix I Modification citation number: A-1

Enter wording of WAC 173-303-830, Appendix I Modification citation:

A. General Permit Provisions

1. Administrative and Informational changes

Modification Approved/Concur: ☑ Yes ☐ Denied (state reason below)

Reason for denial:

Reviewed by Ecology:

for J. J. Wallace — Date: 9-9-11

ISSUED BY
RPP-WTP PDC

R11343547

RIVER PROTECTION PROJECT – WASTE TREATMENT PLANT

ENGINEERING SPECIFICATION

FOR

Vessel-Mounted Vertical Transfer Pumps - WTP HLW Facility

Contents of this document are Dangerous Waste Permit affecting.

Content applicable to ALARA? ☒ **Yes** ☐ **No**

ADR No.
24590-WTP-ADR-M-03-017

Rev
1

Quality Level
Q

DOE Contract No.
DE-AC27-01RV14136

REV	DATE	BY	CHECK	REVIEW	E&NS	DPEM/EGS
2	3/25/11	S. Short	U. Sen	G. Goolsby	C. Meng	D. Wilsey
1	01/13/05	E. Boyer	T. Henry	M. Hoffman	N/A	G. Duncan
A	06/09/04	M. Nielson	T. Henry	M. Hoffman	N/A	G. Duncan

SPECIFICATION No.
24590-WTP-3PS-MPC0-T0009

Rev
2

Revision History

Revision	Reason for Revision
0	Issued for Purchase - includes identified corrections.
1	Revised sections as noted.
2	Completely revised: Removed data as noted in the Equipment Datasheets; incorporated SCNs 24590-WTP-3PN-MPC0-00024, -00026, and -00028; Changed specification from CM to Q; clarified Quality Level of pump vs. HFP piping/interface as noted; removed ECI documents. Major revision, no sidebars used.

Notice

Please note that source, special nuclear, and byproduct materials, as defined in the Atomic Energy Act of 1954 (AEA), are regulated at the US Department of Energy (DOE) facilities exclusively by DOE acting pursuant to its AEA authority. DOE asserts that pursuant to the AEA, it has sole and exclusive responsibility and authority to regulate source, special nuclear, and byproduct materials at DOE-owned nuclear facilities.

Contents

Revision History ii

Notice iii

1 Scope 1

1.1 Project Description and Location 1

1.2 Scope Covered by this Specification 1

1.3 Scope Not Covered by this Specification 2

1.4 Definitions 2

2 Applicable Documents 3

2.1 General 3

2.2 Industry Standards 3

2.3 Safety/Quality/Seismic Classifications 4

2.4 Engineering Specifications 4

2.5 Referenced Drawings 5

2.6 Referenced Equipment Datasheet 6

3 Design Requirements 6

3.1 General 6

3.2 Design Conditions 6

3.3 Conditions of Service 7

3.4 Environmental Conditions 7

3.5 Pump Construction 7

3.6 Operational and Design Requirements 12

3.7 Drivers 12

3.8 Seismic Requirements 13

3.9 Accessibility and Maintenance 13

4 Materials 13

4.1 General 13

4.2 Positive Material Identification 15

4.3 Prohibited Materials 15

4.4 Special Requirements 15

4.5 Storage of Stainless and Corrosion Resistant Materials 15

5 Fabrication 16

5.1 General 16

5.2 Welding Procedures 16

5.3 Structural Components 17
5.4 Chemical Requirements for Materials Used in Contact with Austenitic Stainless Steel and Nickel and Nickel Alloys 17
5.5 Painting, Surface Preparation, and Cleaning 17
6 Tests and Inspections 18
6.1 General 18
6.2 Hydrostatic Tests 18
6.3 Performance Tests 18
6.4 Final Dimensional Checks – Remote Vertical Pumps 19
6.5 Main Coupling Engagement/Disengagement 20
6.6 Plumb Lift Test 20
6.7 Test for Remote Handling Capabilities 20
6.8 Load Lift Test 20
7 Preparation for Shipment 20
7.1 General 20
7.2 Tagging 21
8 Quality Assurance 21
8.1 CM and Q Quality Designation – QA Requirements Specific to HLW Items or Service 21
8.2 Seller Deviation 21
9 Configuration Management 21
10 Documentation and Submittals 21
10.1 General 21
10.2 Submittals 21

Figures

Figure 1 HLW Remote Vessel Mounted Vertical Transfer Pumps 26
Figure 2 Top View of Pump and Pump Stabilizer Pin 27

Appendices

Appendix A Pump Operation Summary ..... A-i
Appendix B Deleted ..... B-i
Appendix C Connectors ..... C-i

Appendix D Items Supplied by Buyer (GFP) ..... **D-i**
Appendix E Final Dimensional Measurements of Pumps by Seller ..... **E-i**
Appendix F In-Structure Response Spectra ..... **F-i**
Appendix G AISC M016 SRD Tailoring ..... **G-i**
Appendix H ASME B31.3 SRD Tailoring ..... **H-i**
Appendix I Deleted **I-1**

1 Scope

1.1 Project Description and Location

The Hanford Tank Waste Treatment and Immobilization Plant (WTP) is a complex of waste treatment facilities where the US Department of Energy's (DOE) Hanford Site tank waste will be put into stable glass form. The WTP contractor will design, build, and start up the WTP pretreatment and vitrification facilities for the DOE Office of River Protection (ORP). The waste treatment facilities will pretreat and immobilize high-level waste (HLW) at the Hanford Site.

The Hanford Site occupies an area of about 560 square miles along the Columbia River, north of the city of Richland, Washington. The WTP facility will be constructed at the east end of the 200 East Area of the Hanford Site. Benton, Franklin, and Grant counties surround the Hanford Site.

1.2 Scope Covered by this Specification

Design, furnish materials for, fabricate, package, test, and prepare for shipment complete pump units and appurtenances in accordance with this specification, including the following:

1.2.1 Remote vessel-mounted vertical transfer pumps equipped with motor, wiring and conduit, close tolerance remote handling components, eductor primer and jumper nozzle connections, electrical jumper connectors, all required piping, including HFP piping from pump mounting plate to PUREX nozzle connections; guide bars and nut retainer, in accordance with this specification; acquisition services documents; and attachments. Installation of remote jumper nozzle connections and electrical jumper connections provided by Buyer as Government Furnished Property (GFP). The Seller's scope is attachment of the connectors only; the connectors themselves are not in the scope of this specification. Refer to Appendix C, Connectors, and Appendix D, Items Supplied by Buyer (GFP), for details.

1.2.2 Special tools required for installation and maintenance.

1.2.3 Shop painting of exposed steel surfaces; stainless steel surfaces shall not be painted.

1.2.4 Operations and maintenance manuals.

1.2.5 Deleted

1.2.6 One motor stand suitable for remote placement, retrieval and movement of pump motor.

1.3 Scope Not Covered by this Specification

1.3.1 Pump mounting flange bolt fasteners.

1.3.2 Remote water, slurry, and power jumpers or instrumentation beyond first connection to factory assembled package.

1.3.3 Material unloading, unpacking, inspection, storage, and installation labor at the job site.

1.3.4 Motor adjustable speed drive.

1.4 Definitions

For equipment covered in this specification, terms are defined as follows:

II over I	Pump and motor stand designed such that no component fails and impacts the vessel, internals, or other nearby ITS SSCs as a result of a Seismic Category I event.
C5	Plant areas and associated ductwork that are in direct contact with radioactive material and that prevent the spread of radioactive material to adjacent zones under both normal and abnormal operating conditions. All vessels and pumps referenced in this specification are located in this level of confinement zone.
Cantilevered	A specific pump configuration where the bearings supporting the rotating pump shaft are positioned at one end of the shaft, leaving the remainder of the shaft unsupported.
Casing	The volute casing or bowl assembly, depending on the pump used for these applications.
Government Furnished Property (GFP)	Components procured by the Buyer and shipped to the Seller for fabrication of the HLW pumps. Components include both Hanford electrical connectors and PUREX nozzles.
High-Level Waste (HLW)	Items associated with the HLW Facility.
HFP Piping	As used in this specification, the discharge piping between the pump mounting plate and the PUREX fitting outside of the vessel boundary. (Reference Figure 1)
Jumper	A section of pipe, electrical power cord, or instrumentation wire that is constructed and supported in such a way that facilitates its installation and removal in remote locations using cranes and robotic manipulator arm. Jumpers are fitted with special nozzles and connectors that allow for proper remote mating and detachment.
Quality Level Q	Quality Level Q component, components, or system of components must be fabricated, assembled and tracked per applicable codes, standards and specifications detailed by Buyer.
Quality Level CM	Quality Level CM component, components, system of components must be fabricated, assembled, and tracked compliant with codes, standards, and specifications detailed by the Buyer.
Remote	For the purposes of this specification, equipment located in the radioactive HLW Facility that can be accessed only by cranes and remote lifting fixtures with robotic manipulator arm, not through direct human contact.
Safety Significant (SS) SSC	SSCs whose preventive or mitigative function is a major contributor to defense in depth or worker safety as determined from safety analyses.
Vertical Pumps	Pumps that mount to a head nozzle of a vessel in the vertical position.

2 Applicable Documents

2.1 General

2.1.1 Work shall be performed in accordance with the codes, standards, and documents listed below, which are an integral part of this specification, and to the extent referenced herein.

2.1.2 When specific chapters, sections, parts, or paragraphs are listed following a code, industry standard, or reference document, only those chapters, sections, parts, or paragraphs of the document are applicable and shall be applied. For codes and standards referenced in this specification the specified revision or effective date identified, as well as the specific revision or effective date of codes and standards that they incorporate by reference (daughter codes and standards), shall be followed. A supplier deviation disposition request (SDDR) must be submitted for approval if the Seller intends to use codes and standards referenced in this specification with a different date or revision.

2.1.3 Unless otherwise specified herein or on drawings, work under this specification shall be performed in accordance with the codes, standards, and publications to the extent indicated by the references herein. If a date or revision is not listed, the latest issue, including addenda, at the time of original award shall apply. Any component not specifically covered by a referenced code, standard or publication shall conform to a relevant ASME and/or ASTM standard.

2.1.4 When more than one code, standard, or referenced document covers the same topic, the requirements for all must be met with the most stringent combination of requirements. All conflicts between documents must be resolved via the Buyer prior to proceeding.

2.1.5 Export Controlled Information (ECI) - Technical information related to PUREX connectors has been determined to be ECI. This information will be transmitted in the appropriate material requisition (MR).

2.2 Industry Standards

Sponsor	Number	Subject
ABMA	Std. 7	American Bearing Manufacturers Association – Shaft and Housing Fits for Metric Radial Ball and Roller Bearings
ABMA	Std. 9	American Bearing Manufacturers Association – Load Ratings and Fatigue Life for Ball Bearings
ABMA	Std. 20	American Bearing Manufacturers Association – Metric Ball and Roller Bearings (Except Tapered Roller Bearings) Conforming to Basic Boundary Plans: Boundary Dimensions, Tolerances, and Identification
AISC M016-89	9th Edition	Manual for Steel Construction – Allowable Stress Design as tailored by Buyer, *Safety Requirement Document Volume II*, 24590-WTP-SRD-ESH-01-001-02; see Appendix G
ASME	B31.3, 1996	*Process Piping* as tailored by Buyer in 24590-WTP-SRD-ESH-01-001-02; see Appendix I

Sponsor	Number	Subject
ASME BPVC	Sec. V, 2004	American Society of Mechanical Engineers – Boiler and Pressure Vessel Code, Nondestructive Examination
ASME BPVC	Sec. IX, 2004	American Society of Mechanical Engineers – Boiler and Pressure Vessel Code, Qualification Standard for Welding and Brazing Procedures, Welders, Brazers, and Welding and Brazing Operators
ASME/ANSI	Y14.5M, 1994	American Society of Mechanical Engineers / American National Standards Institute – Dimensioning and Tolerancing
ASTM	A276, 2000	American Society for Testing and Materials – Specification for Stainless Steel Bars and Shapes
ASTM	A802, 2001	American Society for Testing and Materials – Standard Practice for Steel Castings, Surface Acceptance Standards, Visual Examination
ASTM	G48	Standard Test Methods for Pitting and Crevice Corrosion Resistance of Stainless Steels and Related Alloys by use of Ferric Chloride Solution
HI	HI2.6, 2000	Hydraulic Institute Standards – American National Standard for Vertical Pump Tests
NEMA	MG-1, 1998	National Electrical Manufacturers Association – Motors and Generators

2.3 Safety/Quality/Seismic Classifications

All HLW pump components related to the vessel confinement boundary provide confinement of liquid. The pumps are Quality Level CM and Seismic Category (SC) II using II-over-I criteria (see Section 1.4 for definitions).

The discharge piping from the top of the pump mounting plate to the PUREX flange connection including the PUREX flange and supports is considered HFP piping. HFP piping has a SS SSC designation, is Quality Level Q, and Seismic Category SC-III. Reference Figure 1 for HFP piping and pump interface.

2.4 Engineering Specifications

- 24590- WTP-3PS-FB01-T0001, *Structural Design Loads for Seismic Category III & IV Equipment and Tanks.*
- 24590-WTP-3PS-AFPS-T0001, *Engineering Specification for Shop Applied Special Protective Coatings for Steel Items and Equipment.* Appendix D, Item 4.20 System Code T
- 24590-WTP-3PS-G000-T0002, *Engineering Specification for Positive Material Identification (PMI) for Shop Fabrication.*
- 24590-WTP-3PS-G000-T0003, *Engineering Specification for Packaging, Handling and Storage Requirements.*
- 24590-WTP-3PS-G000-T0014, *Engineering Specification for Supplier Design Analysis.*

- 24590-WTP-3PS-M000-T0002, *General Specification for Mechanical Handling Equipment Design & Manufacture*, Sections 5.2.8 and 5.2.10.
- 24590-WTP-3PS-MUMI-T0002, *Engineering Specification for Low Voltage Induction Motors.*
- 24590-WTP-3PS-NW00-T0002, *Chemical Requirements for Materials Used in Contact With Austenitic Stainless Steel and Nickel Based Alloys.*
- 24590-WTP-3PS-PS02-T0002, *Engineering Specification for Cold Bending of Pipe.*
- 24590-WTP-3PS-SS00-T0001, *Engineering Specification for Welding of Carbon Structural Steel.*
- 24590-WTP-3PS-SS00-T0002, *Engineering Specification for Welding of Structural Stainless Steel and Welding of Structural Carbon Steel to Structural Stainless Steel.*
- 24590-WTP-3PS-SS90-T0001, *Seismic Qualification of Seismic Category I & II Equipment and Tanks.*

2.5 Referenced Drawings

See Figure 1 and Figure 2 for HLW pump configuration.

- 24590-HLW-MV-HFP-00001, *Equipment Assembly HLW Melter 1 Feed Preparation Vessel HFP-VSL-00001 Sheet 1 of 4.*
- 24590-HLW-MV-HFP-00002, *Equipment Assembly HLW Melter 1 Feed Vessel HFP-VSL-00002 Sheet 1 of 4.*
- 24590-HLW-MV-HFP-00003, *Equipment Assembly HLW Melter 1 Feed Preparation Vessel HFP-VSL-00001 Sheet 2 of 4.*
- 24590-HLW-MV-HFP-00004, *Equipment Assembly HLW Melter 1 Feed Preparation Vessel HFP-VSL-00001 Sheet 3 of 4.*
- 24590-HLW-MV-HFP-00005, *Equipment Assembly HLW Melter 1 Feed Preparation Vessel HFP-VSL-00001 Sheet 4 of 4.*
- 24590-HLW-MV-HFP-00006, *Equipment Assembly HLW Melter 1 Feed Vessel HFP-VSL-00001 Sheet 2 of 4.*
- 24590-HLW-MV-HFP-00007, *Equipment Assembly HLW Melter 1 Feed Vessel HFP-VSL-00001 Sheet 3 of 4.*
- 24590-HLW-MV-HFP-00008, *Equipment Assembly HLW Melter 1 Feed Vessel HFP-VSL-00001 Sheet 4 of 4.*
- 24590-HLW-MV-HFP-00009, *Equipment Assembly HLW Melter 2 Feed Preparation Vessel HFP-VSL-00005 Sheet 1 of 4.*
- 24590-HLW-MV-HFP-00010, *Equipment Assembly HLW Melter 2 Feed Vessel HFP-VSL-00006 Sheet 1 of 4.*
- 24590-HLW-MV-HFP-00011, *Equipment Assembly HLW Melter 2 Feed Preparation Vessel HFP-VSL-00005 Sheet 2 of 4.*
- 24590-HLW-MV-HFP-00012, *Equipment Assembly HLW Melter 2 Feed Preparation Vessel HFP-VSL-00005 Sheet 3 of 4.*
- 24590-HLW-MV-HFP-00013, *Equipment Assembly HLW Melter 2 Feed Preparation Vessel HFP-VSL-00005 Sheet 4 of 4.*

- 24590-HLW-MV-HFP-00014, *Equipment Assembly HLW Melter 2 Feed Vessel HFP-VSL-00006 Sheet 2 of 4.*
- 24590-HLW-MV-HFP-00015, *Equipment Assembly HLW Melter 2 Feed Vessel HFP-VSL-00006 Sheet 3 of 4.*
- 24590-HLW-MV-HFP-00016, *Equipment Assembly HLW Melter 2 Feed Vessel HFP-VSL-00006 Sheet 4 of 4.*
- 24590-HLW-MV-HFP-00017, *Flange and Dowel Location HFP-VSL-00001/5 & HFP-VSL-00002/6.*
- 24590-WTP-M0-50-00016, *WTP Remote Fasteners.*
- 24590-WTP-M0-M10T-00012001, *WTP Remote impact Wrench.*
- 24590-HLW-M0-HSH-00081003, *Equipment Assembly HLW System HSH Design Proposal Drawing Adjustable Lifting Beams*
- 24590-WTP-M61-P23T-00005, *WTP Details - PUREX Male Connector (ECI).*
- 24590-WTP-M61-P23T-00040, *Kick-Off Plates PUREX Connector (ECI).*
- 24590-WTP-M61-P23T-00041, *WTP Lower Electrical Holder (ECI).*
- 24590-WTP-M61-P23T-00051, *WTP Assembly Upper Holder Electrical Connector (ECI).*

2.6 Referenced Equipment Datasheet

- 24590-HLW-MPD-HFP-00007, *HFP-VSL-00001 Sample Transfer Pump.*

3 Design Requirements

3.1 General

The Seller shall control the quality of items and services to ensure that the requirements of this specification, applicable codes and standards, MRs, motor and vertical pump data sheets, and other Acquisition Services documents are met.

3.2 Design Conditions

3.2.1 The equipment and appurtenances will be used in a plant that has a design life of 40 years. Vertical pumps shall be designed for a minimum service life of 20 years when subjected to normal periodic maintenance. HFP piping shall be designed to ensure confinement of the HLW concentrate/feed slurry/effluents for the 40-year life of the facility with consideration to the high radiation environment and the erosive/corrosive nature of the solids/mixture HLW. There shall be a 5-year maintenance interval with 100 % availability during that time.

3.2.2 These pumps are generally categorized as remote (as defined in Section 1.4).

3.2.3 These pumps shall be designed for a radiation exposure life of not less than 5 years at the conditions specified in the Equipment Datasheet. Normal maintenance items shall be included, such as bearings, packing, seals, and gaskets, which, due to the remote radioactive environment, shall function with no maintenance required within that period.

3.2.4 The pumps shall provide confinement of the vessel contents to the environment and confinement of air in leakage to the vessel. This shall be accomplished with a remote gasket on the mounting plate (3.5.7.16) and shaft seals (3.5.7.11).

3.3 Conditions of Service

3.3.1 Pumps shall be capable of moving radioactive solutions or slurries (see Equipment Datasheet for Rheologies) in and out of remotely operated process cell vessels under conditions of service stated in the pump and electric motor data sheets.

3.3.2 These pumps shall be located in the HLW melter cave and exposed to a radioactive environment with expected radiation rates as described in the Equipment Datasheet.

3.3.3 See Equipment Datasheet for additional design conditions.

3.4 Environmental Conditions

3.4.1 The Seller shall provide pumps that meet the environmental conditions stated on the Equipment Datasheet.

3.4.2 See Equipment Datasheet for environmental conditions during normal and abnormal conditions.

3.5 Pump Construction

3.5.1 General

Reference Section 2.3 and 8.1 for pump quality designation.

3.5.2 Cantilever Pump Design Definition

For the purposes of this specification, a cantilever pump is a pump with a shaft and impeller that extends below the radial bearing (located above the mounting flange). Cantilever pumps shall have suction tailpipe and eductor priming assemblies. The pumps shall be completely self-draining. Cantilever pumps shall not have any bearings in the interior of the vessel.

3.5.3 Some design parameters are given on the Equipment Datasheet included in the MR.

3.5.4 Seller shall design and fabricate a pump test lifting beam assembly with two lifting hooks. These lifting hooks (dimensions and configuration of the hooks are shown in drawing 24590-HLW-M0-HSH-00081003) will facilitate a two-point lift by the lift beam that is in turn lifted by a single main crane hook. Lifting hooks shall be designed to lift 1.5 times the total dry pump weight and shall provide a straight plumb, 1/4-inch maximum from plumb, lift of a fully assembled pump.

Important: The lift beam shall hang plumb when not supporting the pump. Additionally, the pump shall be counter-weighted, if necessary, to provide a plumb lift while being hoisted by the test lift beam. Variation from vertical shall be 1/4-inch maximum from plumb.

3.5.5 Design calculations related to both the lifting assembly and lifting lug designs shall be submitted for Buyer review. (Section 10.2.4.2)

3.5.6 Pumps and HFP piping shall be designed in accordance with codes and standards listed in Section 2.2 quality and seismic classifications listed in Section 2.3, and controlled in accordance with the quality assurance requirements in Section 8.1.

3.5.6.1 The pump is a vertical and cantilever type as defined in Section 1.4. Figure 1 and Figure 2, HLW Remote Vessel-Mounted Vertical Transfer Pumps, illustrate the pump setting and vessel configuration.

3.5.6.2 Seller shall design all pump components (including casing, impeller, tailpipe, eductor piping, and discharge piping) and HFP piping with the necessary structural supports to withstand all the operating forces, including those from slurry agitation, without exceeding the infinite fatigue life stress value or compromising structural integrity of the pump. Such forces shall be determined and quantified during detailed design.

3.5.6.3 The pumps shall be designed to the dimensions and tolerances shown on Figure 1, Figure 2, the Equipment Datasheet, and in accordance with ASME Y14.5M, *Dimensioning and Tolerancing*. Interfacing dimensions and tolerances are of extreme importance, since the HLW pumps will be remotely removed from and reinstalled onto vessels of equal or greater dimensional and tolerance requirements. Pumps will also interface remotely with close tolerance remote process jumpers at all pump nozzle connections.

3.5.6.4 The critical tolerances for location, flatness, parallelism of working plane, and nozzles will be strictly enforced. Jigs or gauges shall be used to ensure consistency and compatibility between pumps and shall be furnished by the Seller. All measurements shall be referenced to the temperature specified in Appendix E, Final Dimensional Measurements of Pumps by Seller.

3.5.6.5 In order to verify all the specified dimensions, the Seller shall provide a, b, and c on submitted design drawings.

a Establish x-y coordinates of all guide-pin holes, remote connectors, stud holes, and mounting plate centerlines with reference to the master dowel hole.

b Establish the bottom of the mounting plate as the horizontal datum plane from which pump elevations can be measured.

c Represent all coordinates and targets to be used for precision dimensional verification with easily defined permanent machined features that are not subject to interpretation.

d Deleted

3.5.6.6 As-built dimensions shall be established by Seller's methods to decimal inch dimensions (number of decimal places, two or three, according to respective required dimensions) and submitted with a tolerance control procedure to establish and verify horizontal and vertical centerlines, precise horizontal and vertical measurements, flatness, and datum planes of all interface points.

3.5.6.7 Mounting plates shall be fabricated with impact wrench positioners, nut cups, and guide pinholes sized and located as shown on Figure 1 and Figure 2.

3.5.6.8 Remote connectors shall be attached and located as shown on Figure 1 and Figure 2 to facilitate proper mating and remote replacement of jumper assemblies. The Seller shall design and fabricate the support arrangement for the remote connectors shown, to accommodate a maximum resultant force (all moments zero) of 2000 lb and a maximum resultant moment (all

forces zero) of 2900 ft-lb per nozzle. Simultaneous loading of all nozzles shall be the basis of support design below the nozzle kick plate. Support design must not encroach on space required for remote impact wrench (see Figure 1 and Figure 2). Remote connector nozzles and components are required and will consist of the types listed below.

a Remote connector nozzles for process and priming and nut retainer (see Figure 1 and Figure 2)

b One electrical lower holder (see Figure 1 and Figure 2)

c Grease connector for in-place relubrication of bearings (see Section 3.5.7.4)

Note: Appendices C and D detail which nozzles and connectors are supplied by the Buyer.

3.5.6.9 The pump shall be remotely replaceable through a vessel nozzle by means of an overhead crane equipped with an adjustable span lifting beam, impact wrench, a closed circuit television system for remote viewing, and a power manipulator for smaller, more complex functions. Remote handling and potential radiation exposure require special pump attachments and configuration approaches (see following sections) to be furnished by the Seller. Additionally, the pumps shall be designed to accommodate operational envelopes for the adjustable span lifting beam, impact wrench and power manipulator. All remote handling interfaces shall be subject to Buyer review prior to fabrication.

3.5.6.10 Seller shall fabricate and weld in place guides to protect the pump during insertion and removal through the vessel nozzle. Three equal radially spaced guides shall be installed on each pump.

3.5.6.11 Guides shall be welded at one end only to allow for pump disassembly. Guides shall be designed to facilitate remote installation and removal of pumps through the vessel nozzle.

3.5.6.12 Pumps shall be designed to minimize the radiation exposure time of maintenance personnel. The connector nozzle configuration (Figure 1 and Figure 2), required nozzle supports, and electrical wiring to motor shall all be designed to minimize time required to remove and replace motor (see Section 3.7.2.2).

3.5.6.13 HLW pumps shall be a two-piece design with a remotely detachable motor for removal and maintenance or replacement. The motor assembly/pump interface shall incorporate master and slave guide pins and remote stud and nut configuration similar to the pump/vessel interface. Main coupling between the vertical pump shaft and drive motor shaft shall be solid steel male-female spline type, statically balanced, and designed for all conditions of service indicated in the vertical pump datasheet and this specification. Couplings shall be completely self-aligning and splined on the pump side to allow remote removal and installation of drive motor. The remote removal and installation of the drive motor, including the self-aligning feature of splined couplings, shall be demonstrated as outlined in Section 6.4. The motor or pump shall be free to spin to allow remote engagement of splined coupling.

3.5.6.14 Motor shall be mounted on a machined surface. The Seller shall provide a machined notch in the motor mounting plate to indicate the proper motor orientation upon reassembly of motor and motor mounting plate which is viewable from crane mounted cameras.

3.5.7 General Pump and Piping Requirements – HLW

3.5.7.1 Pump casings shall be hydrostatically tested in accordance with Section 6.2. Castings shall be sound and free from cracks, pits, or nodules in accordance with Section 5.1.1.

3.5.7.2 Two or more bearings shall support the vertical rotating pump shaft. To improve the stability of the rotating assembly, the bearings shall be preloaded, if necessary, according to bearing size. The load on the thrust bearing shall consist of the sum of the weight of the rotating assembly and the hydraulic thrust and moment from radial thrust and the preload. The load on the radial bearing shall consist of radial components and preload only.

3.5.7.3 All bearings shall be cartridge or standard width, single row radial ball, deep groove (Conrad type) or angular contact type, ABMA Standard 20, Class 3 Internal Clearance, and selected to give 100,000 hours minimum L_{10} rating life in conformance with ABMA Standard 9.

3.5.7.4 Bearings and bearing seals shall withstand all conditions of service as stated in vertical pump datasheet. Bearing seals shall be designed for the least possible drag on the inner race of the bearing to minimize heat build-up and premature failure. Shaft and housing fits shall be in accordance with ABMA Standard 7.

3.5.7.4.1 The Seller shall provide in-place re-greasing for the bearings to allow for re-lubrication of the bearings without removing any components of the pump assembly from their installed positions. Seller to provide regreasing schedule and quantity. In-place re-greasing for HLW remote vertical pumps will be facilitated using a power manipulator and BUYER supplied low pressure (250 psi) grease gun on the overhead crane, which will interface with the grease connector. The SELLER shall provide Staubli grease connectors located within 6 inches of the bearings, to minimize opportunities for the grease line to clog due to radiation hardening. The piping is to be braced for manipulator loads. A collection device for the excess grease that may be present during remote greasing shall be provided. As an alternative, sealed-for-life ball bearings are acceptable for the pump; Buyer to review sealed-for-life bearings and approve before fabrication.

3.5.7.5 Bearings shall be lubricated with Chevron SRI Grease 2 (NLGI Grade 2), as detailed in Appendix C of 24590-WTP-3PS-M000-T0002, *General Specification for Mechanical Handling Equipment Design & Manufacture,* or an approved equivalent radiation-resistant grease in an amount determined by bearing manufacturer. If an alternate grease is recommended, all appropriate technical information shall be submitted for Buyer acceptance.

3.5.7.6 Thrust bearings shall provide full load capabilities if the normal rotation direction of the pump is reversed.

3.5.7.7 Shafts of solid construction are preferred and shall be designed to carry their loadings without exceeding their normal limits of combined stress, taking into account fatigue stress due to change in load or speed. The first lateral critical speed of shafts and impellers shall be at least 20 % above the maximum operating speed.

3.5.7.8 The Seller shall ensure a smooth, even impeller finish and uniformity of shape and finish on the vanes and the space between. The acceptance criteria for impeller finish is a machine finish RMS of at least 63 micron or 56 RA. Surface finish is to be verified by a Profilometer and reported per Section 10.2.3.7.

3.5.7.9 The bearing frame shall be constructed and bearing centers spaced so that the shaft and impeller assembly will have proper support to minimize vibration, as detailed in the following Section.

3.5.7.10 Maximum Allowable Vibration Limits

3.5.7.10.1 Motor, shaft, and impeller vibration amplitude shall not be more than 0.002 inches peak-to-peak, measured normal to pump shaft axis and not more than 10 inches above the impeller centerline, in air at motor speed, filtered to shaft speed.

3.5.7.10.2 The pump vibration amplitude shall not be more than 0.001 inches peak-to-peak, measured on the surface of the lower bearing housing normal to shaft axis, in air at motor speed, filtered to shaft speed.

3.5.7.10.3 The pump casing vibration amplitude shall not be more than 0.003 inches peak-to-peak measured outside the surface of the casing normal to shaft axis, pumping water at the design rate, filtered to shaft speed.

3.5.7.10.4 Vibration test results for each pump shall be subject to Buyer review prior to shipping the pumps.

3.5.7.11 Shaft seals shall be installed to confine air inflow at the point of pump shaft entry to the vessel. Seller shall furnish and install a low pressure, non-lubricated stuffing box packed with Grafoil or approved equivalent split-ring, with a minimum compressed axial pitch length of 4 inches. Seller also shall provide a temporary identification tag to caution against adjusting the Grafoil seal after pump delivery. The stuffing box shall also meet the following requirements: a) minimum of six rings, b) minimum ring size of 1/2 in. by 1/2 in., and c) designed for ease of replacement of rings.

3.5.7.12 An installed priming system is required to permit pump startup when vessel fluid level is below the pump impeller. The priming system shall be a water eductor type of the general configuration shown on Figure 1 and shall be capable of starting the pump over the full range of conditions shown on the vertical pump datasheet and described in this specification. The priming system shall be able to start the pump from a vessel low fluid level as described in the Equipment Datasheet. Available water pressure at the primer nozzle will be as indicated on vertical pump datasheet. The priming system shall be capable of starting pumps without exceeding the maximum priming liquid volume as stated on the vertical pump datasheet. Priming capabilities shall be tested and verified (Section 6.3.5).

3.5.7.13 All pumps shall be provided with keyed impellers with separate threaded lock nuts and double (jam) nuts to secure the pump impeller.

3.5.7.14 The pump and HFP piping attached to the pump shall meet all requirements of ASME B31.3 1996. Pipe supports shall be designed and constructed in accordance with ASME B31.3 and AISC M016.

3.5.7.15 The maximum pump/motor weight including all connections and appurtenances shall not exceed 3600 lb.

3.5.7.16 A 1/2 inch thick remote gasket will be provided by Buyer to seal the pump and vessel nozzle.

3.5.7.17 A 2-inch diameter pin has been designed that is attached to the vessel bottom, and a maximum force on the pin has been calculated to be 1130 lb. An arm attached to the pump suction nozzle slips over the pin to stabilize the pump. The Seller shall design and supply the stabilizing arm. The Seller shall also design the pump for hydrodynamic forces based on a slurry velocity normal to the pump of 5.00 ft/sec with viscosity and density as indicated in Equipment Datasheet. See drawings 24590-HLW-MV-HFP-00001 through -00017 for further details (e.g., nozzle orientation, stabilizing pin location, agitator location).

3.5.7.18 The Seller shall perform calculations for Buyer review providing thrust, torque, and moments on the vessel nozzle supporting the pump due to pump operation and vessel agitator induced flow effects.

3.6 Operational and Design Requirements

3.6.1 The pump head capacity curve (Section 6.3.3) shall be continuously rising from maximum flow to shut-off.

3.6.2 Pump design pressure shall be not less than 25 % above the shut-off head at the specified suction pressure.

3.6.3 Pumping systems shall be designed to minimize cavitation. The pumps shall operate free of cavitation over the entire range of conditions indicated in Equipment Datasheet.

3.6.4 The Seller shall minimize rotational speed of shafts and impellers due to wear considerations and head losses encountered when pumping slurries at high speeds.

3.6.5 Frequency and length of operation for each pump is shown in Appendix A, Pump Operation Summary.

3.6.6 Startup torque shall be based on two times the normal running torque without priming water. (Slurry rheology is indicated in the Equipment Datasheet.)

3.7 Drivers

3.7.1 Motors

3.7.1.1 Drive motors shall conform to the requirements of 24590-WTP-3PS-MUMI-T0002, *Engineering Specification for Low Voltage Induction Motors*.

3.7.1.2 The Seller shall provide each pump with a totally enclosed fan-cooled, wash-down rated, chemical-type motor in accordance with the motor and vertical pump datasheet included with the MR.

3.7.1.3 Motor rated horsepower shall not be exceeded by any operating condition that can develop with the impellers.

3.7.1.4 Motors shall be rated for inverter duty for use with adjustable speed drives.

3.7.1.5 All motors shall be NEMA design C type (in accordance with NEMA MG-1). The motor shall be the weakest link in a high torque event such that the shaft, impeller blades, and so forth do not fail in any event.

3.7.2 Remote Service

3.7.2.1 Motor shall be Class H type and radiation resistant for levels stated in the Equipment Datasheet.

3.7.2.2 The Seller shall install all required conduit with proper wiring from the motor junction box to and including the Buyer supplied lower electrical connector. All electrical components shall be waterproof. Cable shall be radiation resistant for levels stated in the Equipment Datasheet.

3.7.2.3 Seller shall provide a remote motor stand on which the motor can be set for storage, decontamination, or maintenance. It is not necessary to handle the motor stand and motor together, just one at a time. The motor stand shall have no seismic category requirement.

3.8 Seismic Requirements

3.8.1 The remote vertical pump components and HFP piping, including the mounting plates, shall be designed to SC-II requirements in accordance with the methods and procedures in Specification 24590-WTP-3PS-SS90-T0001, *Seismic Qualification of Seismic Category I & II Equipment and Tanks*, attached to the MR. The Seller shall submit their seismic analysis documentation to the Buyer (Reference Section 10.2.4.1). The in-structure response spectra is provided in Appendix F. Jumper nozzle loads and pump-vessel bounding interface loads are located in Equipment Datasheet.

3.9 Accessibility and Maintenance

3.9.1 The Buyer's layout allows necessary access and space to facilitate maintenance during normal plant operation or scheduled shutdown.

3.9.2 The Seller's accessibility and maintenance recommendations for each piece of equipment shall be included in the Seller's operations manual submittal (Reference Section 10.2.5.2).

3.9.3 For the HLW pumps, frequency of inspection and maintenance intervals, beyond the 5-year no-maintenance period, shall be minimized in accordance with equipment Seller's recommendations.

3.9.4 Design configuration for accessibility and maintenance of the pumps shall be reviewed by Buyer at 50% design review.

4 Materials

4.1 General

Pump materials situated above and fastened to the mounting plate (see Figure 1 and Figure 2) shall be austenitic stainless steel type 316L, except for the discharge piping. Pump materials below and including the mounting plate, except for wetted pump components in contact with high velocity fluid, shall be 316L stainless steel (or approved equal) unless otherwise noted in this specification or the Equipment Datasheet. Stainless steel material shall be in accordance with requirements of this specification (including codes, standards, and specifications referenced within). Pump suction pipe, discharge pipe from the casing to the mounting plate,

and the HFP pipe from the mounting plate to the PUREX nozzle weld joint, shall be made from an appropriate erosion resistant material, such as Zeron 100.

Note: The Seller may use standard materials of construction, suitable for the radiation environment, for motor, bearings, and coupling components.

All other components (such as piping, nozzle assemblies, lifting assemblies, main shaft seals, nut retainer) shall be 316L stainless steel unless specified otherwise in this specification or the Equipment Datasheet.

The materials of construction for special components not named herein shall be subject to Buyer review.

4.1.1 The Seller shall identify, on assembly drawings, all materials (including plate, forging, pipe, bolting) by ASTM material designation, class and UNS number, and shall submit material certificates for the Buyer's review and approval (reference Section 10.2.8).

4.1.2 The wetted pump components (for example, suction bell, suction piping, casing, impeller, shaft bushing deflector, casing wear rings, discharge piping) shall be made of corrosion and erosion resistant materials. See the Equipment Datasheet for the reference material for these applications).

4.1.3 Gasket selection and configuration shall be based on specific application, performance requirements and environmental conditions.

4.1.4 Fastener interfaces shall be as shown on Figure 1 and Figure 2. Fasteners shall be accessible by the Buyer's impact wrench per requirements of Section 5.2.8 and 5.2.10 of 24590-WTP-3PS-M000-T0002, *General Specification for Mechanical Handling Equipment Design & Manufacture.* Seller shall design and fabricate pumps to ensure access is available for the remote impact wrench. The envelope dimensions of the impact wrenches are detailed on drawing 24590-WTP-M0-M10T-00012001. The HLW Melter Cave 1 and 2 impact wrenches will be used to remotely install and remove these pumps; the largest envelope dimensions for these wrenches must be used in impact wrench access design. The remote fasteners are per drawing 4, *WTP Remote Fasteners*. Buyer will provide the pump mounting flange bolt fasteners. Remote nuts are impact wrench torqued to 400 ft·lbs during makeup and up to 750 ft·lbs during breakout. All remote handling interfaces shall be subject to Buyer review prior to fabrication.

4.1.5 The starting materials for the structural and functional components shall be from new stock, not repaired or otherwise microstructurally changed from the as-received stock from the certified supplier.

4.1.6 The Seller shall coordinate with the Buyer to arrange delivery of the GFP, listed in Appendix D, as required for Seller's pumps. This shall be accomplished by identifying GFP need dates, on Seller's fabrication schedule.

4.1.7 All GFP shall be controlled in accordance with a Seller submitted Government Property Management Plan (GPMP) in accordance with the commercial terms of the purchase order.

4.2 Positive Material Identification

All pump casing, mounting plate, and HFP piping materials shall be identified in accordance with 24590-WTP-3PS-G000-T0002, *Engineering Specification for Positive Material Identification (PMI) for Shop Fabrication*. Components requiring PMI testing shall include the following: mounting plate assembly, discharge pipe assembly, prime pipe assembly, pump casing, packing box, and packing gland.

4.3 Prohibited Materials

4.3.1 Bronze, copper, lead, zinc, tin, antimony, cadmium, mercury, bismuth, or other low melting point metals, their alloys, or materials containing such metals as their basic constituents; sulfur; and halogens shall not be used in direct contact with stainless steel. This prohibition applies to tools, fixtures, paints, coatings and sealing compounds, and any other equipment or materials used by the Seller in handling, assembly, and storage of stainless steel parts or components.

4.3.2 Asbestos, Teflon, and aluminum shall not be used in any component of the vertical pumps.

4.4 Special Requirements

4.4.1 HFP piping handles process solutions outside the vessel boundary and shall have confirmatory testing to ensure the alloy is as listed on the certified material test report. This shall be accomplished using specification 24590-WTP-3PS-G000-T0002, *Engineering Specification for Positive Material Identification (PMI) for Shop Fabrication.*

4.4.2 Stress corrosion cracking, crevice corrosion, pitting corrosion and uniform corrosion can be minimized by the proper design and fabrication. Crevices, low points, and stress concentrations shall be eliminated wherever possible. Where crevices cannot be eliminated, a wider opening with flat bottoms shall be designed such that the volume can be readily flushed.

4.4.3 Stainless steel mill products shall be visually inspected (100 %) to determine surface quality and avoid using sections that have been damaged, bent, over pickled or exhibit contaminant spill stains.

4.5 Storage of Stainless and Corrosion Resistant Materials

4.5.1 The seller shall provide material control procedures for storage of stainless steels and corrosion resistant alloys (reference Section 10.2.2.13). The procedures shall include:

4.5.1.1 Identification and marking

4.5.1.2 Dirt, dust, and contamination control

4.5.1.3 Segregation of materials dedicated to the WTP fabrications

4.5.1.4 Dunnage control and prevention of contamination

4.5.1.5 Methods used to control welding consumables that include receipt, storage, issuance, baking/drying of flux and disposal.

5 Fabrication

5.1 General

5.1.1 All casting surfaces shall meet Level 1 visual examination acceptance standards as described in ASTM A802. Castings shall be free from cracks, tears, voids, or other defects indicative of substandard casting quality.

5.1.2 All vertical pumps shall be neatly finished and free of burrs and fins, and other harmful surface conditions.

5.1.3 For ease of decontamination, remote vertical pumps shall be designed to minimize crevices that can trap contaminants. All surfaces are to be polished smooth (RMS 125 finish other than impellers). See Section 3.5.7.8 for impeller requirements. Additionally, all non-machined plate, pipe surfaces, and welds shall be glass beaded to a 112 RA finish (equivalent to 125 RMS machined finish) or better. Actual surface finishes shall be verified with a Profilometer and recorded in the RA format. Material hold-up points internal to the pump shall be minimized.

5.2 Welding Procedures

5.2.1 All welding procedures and welder qualifications for pump components shall be in accordance with ASME BPVC Section IX. The Seller shall submit all welding procedures for vertical pumps for review prior to the start of any welding. (Section 10.2.2.1)

5.2.2 Deleted

5.2.3 The properties of duplex stainless steel can be appreciably affected by welding. Due to the importance of maintaining the balanced microstructure and avoiding the formation of undesirable sigma and intermetallic phases the weld procedures require additional testing for qualification. Significant intermetallic phases may lead to loss of toughness and corrosion resistance. Recommended filler material is a duplex UNS S32750 or similar. All dissimilar metal welds shall be made using a tungsten gas arc welding process using 100 % argon gas; both the welding gas and purge gas shall contain less than 25 ppm oxygen for optimum corrosion resistance of the finished weld. Weld procedures for duplex stainless steel (welding procedure specification and procedure qualification record) are to be supplemented by ferrite count or ferrite number tests and corrosion testing to ASTM standard G48. The ASTM G48 test is to be modified to include coupons exposed to nitric acid and sodium hydroxide to indicate that the welding method is satisfactory. G48 test temperature for super duplex stainless steels is 35 °C. Test reports shall be attached to the weld procedure and submitted to the Buyer. (Section 10.2.2.1)

5.2.4 All weld repairs, straightening, and machining processes shall be controlled and documented such that the Buyer representative can follow the process to shop procedures. All weld repairs shall be reviewed by the Buyer, planned, documented, and performed according to ASME BPVC Section IX. All weld repairs that result from nondestructive examination (NDE) evaluations shall be inspected a second time using the same technique. No more than two weld repairs are permitted for the same defect indication called out by the initial NDE inspection report. Any additional repairs shall be subject to additional Buyer review before implementation.

5.3 Structural Components

5.3.1 Stainless Structural Steel

Document 24590-WTP-3PS-SS00-T0002, *Engineering Specification for Welding of Structural Stainless Steel and Welding of Structural Carbon Steel to Structural Stainless Steel*, covers the welding requirements for stainless structural steel.

5.4 Chemical Requirements for Materials Used in Contact with Austenitic Stainless Steel and Nickel and Nickel Alloys

5.4.1 Materials and consumables used in the fabrication and handling of these pumps shall comply with 24590-WTP-3PS-NW00-T0002, *Chemical Requirements for Materials Used in Contact with Austenitic Stainless Steel and Nickel Based Alloys.*

5.5 Painting, Surface Preparation, and Cleaning

5.5.1 All steel surfaces, other than those materials listed in Section 5.5.6, shall be in accordance with the cleaning, surface preparation, and coating requirements of Appendix D, Item 4.20 System Code T in specification 24590-WTP-3PS-AFPS-T0001, *Engineering Specification for Shop Applied Special Protective Coatings for Steel Items and Equipment.*

5.5.2 Sharp welds and sharp corners shall be ground smooth and blended into the base materials. Each layer of welding shall be smooth and free of slag inclusions, porosity excessive undercut, cracks and lack of fusion prior to beginning the next layer. In addition, the final weld layer shall be sufficiently free of coarse ripples, non-uniform bead patterns, high crown, and deep ridges to permit required inspection.

5.5.3 The interior surfaces of attached piping and bearing housing shall be cleaned of all mill scale, grease, oil, dirt, cuttings, weld spatter, and other foreign matter.

5.5.4 Unpainted components shall not be sandblasted.

5.5.5 Cleaning agents used for austenitic stainless and nickel-based alloys shall not contain more than 50 ppm by weight of inorganic chlorides. Seller shall submit cleaning procedures for review (Reference Section 10.2.2.10).

5.5.6 Pump components of stainless steel, cobalt alloy, and nickel-based alloy construction shall not be painted. Commercial items provided by the Seller that are purchased prepainted (motor) need not be painted per 24590-WTP-3PS-AFPS-T0001.

5.5.7 Coatings from one manufacturer shall not be used over coatings from another, and to ensure compatibility, shall not be intermixed.

6 Tests and Inspections

6.1 General

A test and inspection plan shall be developed by the Seller and submitted to the Buyer for review and permission to proceed in accordance with Section 10.1. The plan shall identify all Seller's inspections, examinations, tests, and witness and hold points required during the pump fabrication process. When an operation requires a procedure, the procedure number shall be designated on the plan. The plan shall also identify the Buyer's hold/witness points identified in Section 5 of the appropriate MR. In addition, during review of the plan by the Buyer, the Buyer may add additional hold/witness points in the plan.

6.2 Hydrostatic Tests

6.2.1 Each pressure part of the pump including the priming and discharge piping shall be hydrostatically tested at 150 % of maximum allowable working pressure (MAWP). Hydrostatic tests shall be maintained for at least 30 minutes. Regions of the pump that are subject to suction pressure such as the mounting plate components and the packing box do not require to be rated for MAWP. These components shall by hydro tested at 25 psig.

6.2.2 Before a hydrostatic test procedure is implemented, the Seller shall submit it to the Buyer for review.

6.2.3 Water used in hydrostatic testing shall be of potable quality or better. At no time shall it contain over 50 ppm chlorides.

6.2.4 Systems shall be thoroughly drained and dried by wiping or blotting all accessible areas within 24 hours after testing, rinsing, or flushing operations. Water shall not be left in the system for more than 48 hours after testing, rinsing, or flushing operations. To minimize the potential of microbiologically induced corrosion, the Seller shall use only treated process water, potable water, or deionized (demineralized) water.

6.3 Performance Tests

6.3.1 A shop performance test with water shall be conducted on all pumps, in accordance with Hydraulic Institute (HI2.6) standards, at rated speed over the complete range of flow to maximum capacity to demonstrate fulfillment of efficiency and rating guarantees. Performance tests shall be run using the net positive suction head (NPSH) available to the pump at the site, including adjustments for all expected liquid levels in vessels and corrected to shop test conditions. The test shall utilize an adjustable speed drive (ASD) to maintain flow rate through the range of vessel liquid levels. ASD configuration and settings shall be submitted to Buyer. The minimum acceptable flow rate is stated on the Equipment Datasheet.

6.3.2 An NPSH at incipient cavitation test shall be performed in accordance with HI standards for each pump. At least three flow points shall be tested: design point, run out, and minimum flow. At each point, five or more readings shall be taken at increasingly lowered suction pressure until a 3 % drop in head is noted.

6.3.3 Water test results shall be plotted, showing head, efficiency, and brake horsepower vs. capacity. Water temperatures shall be recorded, and test results corrected to a design average

temperature. For pumps in slurry service, in addition to the water head curve, the Seller shall provide an estimated slurry head curve for comparison. The thickest slurry described in the Equipment Datasheet shall be used; specifically, the highest yield stress and highest viscosity.

6.3.4 Additional pump priming tests shall show the minimum pressure, flow, and total quantity of priming water required to prime the pump at the low liquid level described in the Equipment Datasheet. These tests shall be plotted showing the eductor primer flow rate vs. pressure at the primer nozzle for primer nozzle pressures between 30 and 80 psig.

6.3.5 Shop test results must verify that all pumps are capable of starting from the minimum liquid level without exceeding the maximum priming liquid volume as listed in the vertical pump data sheets.

6.3.6 Shop tests for each pump must verify all pumps operate within maximum allowable vibration limits specified in Section 3.5.7.10.

6.3.7 Witness tests shall be run after final trim has been calculated and applied to pumps. Final witness tests shall be run only with the Buyer's supplier quality representative (SQR) present. A satisfactory full-speed test shall be run at final impeller diameter before the Buyer's SQR is called in to observe the test. A preliminary curve and test data shall be submitted to the Buyer's SQR immediately after each test. The amount of acceptable plus tolerance on head, capacity, and horsepower shall be within the range of tolerances stated by the HI standards.

6.3.8 Seller shall provide an analysis verifying that the first lateral critical speed of all pump shafts and impellers is at least 20% above the maximum operating speed (Section 10.2.4.3). The Seller shall assume a rigid pump mounting foundation that contributes no more than 5 % of the total deflection of the structural elements.

6.3.9 During testing, each pump tested shall be fully supplied with electrical power by means of the electrical connectors per approved design.

Note: The Buyer will supply the upper female electrical connector to connect the Seller's wiring to the electrical lower holder. The Seller shall coordinate with the Buyer to arrange delivery of the upper female electrical connector, as required for testing of Seller's pumps. This shall be accomplished by identifying performance test need dates on Seller's fabrication schedule. The Seller is responsible for the interface between the upper female connector and the Seller's own power source during testing. The upper female connector component shall be returned to the Buyer after the final performance testing is completed.

6.3.10 After tentative acceptance by the Buyer's SQR, the pumps may be readied for shipment but shall not be released until acceptance by the Buyer of formal submission of curves and data, which will constitute the performance test report.

6.4 Final Dimensional Checks – Remote Vertical Pumps

6.4.1 The Seller shall verify the critical dimensions as given in Figure 1 and Figure 2, or as otherwise noted in this specification or material requisition. The measurements shall be in accordance with techniques described in Appendix E. (**Note**: The layout has not been finalized; therefore, the dimensions indicated are tentative.)

6.4.2 The Seller shall provide proof that the pump and pump appurtenances are dimensionally correct within the specified tolerances. This shall be accomplished by the completion of as-built dimensional record drawings. These drawings, with details of the critical dimensions added by the Seller, shall be submitted to the Buyer for review prior to shipment (Reference Section 10.2.1.13).

Note: In addition to pump and pump appurtenances above, as-built shim dimensions of each shim required for precision placement of the pump shaft thrust and radial bearings shall be recorded on the dimensional record drawings for each pump.

6.4.3 All final critical dimensional measurements, as detailed in Figure 1 and Figure 2 or as otherwise noted in this specification or MR, will be witnessed by the Buyer. No witness tests shall be performed without the Buyer's SQR present.

6.5 Main Coupling Engagement/Disengagement

Each splined coupling between the pump shaft and drive motor shaft shall be tested to ensure it functions properly. Specifically, each pump motor coupling shall be tested by means of a two-point lift applied at the motor lifting fixture to demonstrate that the motor can be satisfactorily engaged and disengaged from the coupling. The coupling shall be self-indexing and shall not require manual positioning for proper engagement. All main coupling engagement and disengagement tests will be witnessed by Buyer. No witness tests shall be performed without the Buyer's SQR present.

6.6 Plumb Lift Test

All pumps shall be tested for single point lift with Seller furnished lift beam connected to lifting lugs. Upper, lower and combined unit shall be tested. Variation from vertical shall be 1/4-inch maximum from plumb. All plumb lift tests will be witnessed by Buyer. No witness tests shall be performed without the Buyer's SQR present.

6.7 Test for Remote Handling Capabilities

Each component, as well as the complete assembly, must be tested for remote handling capabilities.

6.8 Load Lift Test

A load test for 1.5 times the normal dry load, shall be demonstrated on each unit in the Seller's shop, with Buyer to witness one of each type and review documentation on other tests. During the load test, the pump shall be lifted off the shop floor and held for at least 10 minutes. The pump shall be visually inspected for any deformation or stress cracking at the lifting lugs and at the lifting lugs attachments or reinforcements to the pump.

7 Preparation for Shipment

7.1 General

Vertical pumps shall be packaged, handled, and stored in accordance with 24590-WTP-3PS-G000-T0003, *Engineering Specification for Packaging, Handling and Storage Requirements*.

7.2 Tagging

A stainless steel nameplate shall be fastened to each vertical pump showing the manufacturer's name, shop location, date of manufacture, serial number, equipment rating, equipment tag numbers, weight of assembly, and purchase order number. Equipment tag numbers are provided in the MR.

8 Quality Assurance

8.1 CM and Q Quality Designation – QA Requirements Specific to HLW Items or Service

8.1.1 The Seller shall have a quality assurance program (QAP).

8.1.2 The Seller shall have in place a QAP containing, at a minimum, all the elements marked as applicable in the Supplier quality assurance program requirements datasheets attached to the MR. The Seller shall submit their QA manual with their proposal.

8.1.3 The pumps shall be manufactured in accordance with the Seller's QAP that has been evaluated and accepted by the Buyer's procurement supplier quality department.

8.2 Seller Deviation

Seller shall identify and promptly document any deviation from requirements in the acquisition documents. Seller-proposed deviations from Acquisition Services documents shall be initiated by use of an SDDR form (listed in Section 2 of the MR and attached thereto). In addition, the Seller shall describe the recommended disposition based on appropriate analysis. Requests for deviations from sub-Sellers shall be submitted to the Buyer through the primary Seller.

9 Configuration Management

Equipment or components covered by this specification are identified with plant item numbers as shown in the motor and vertical pump datasheets, in accordance with Section 7.2, Tagging.

10 Documentation and Submittals

10.1 General

The Seller shall submit to the Buyer engineering and quality verification documents in the forms and quantities shown in Form G-321-E, *Engineering Document Requirements*, and Form G-321-V, *Quality Verification Document Requirements*, attached to Section 3 of the MR.

10.2 Submittals

The Seller shall submit the following:

10.2.1 Drawings

Drawings shall show the following information:

10.2.1.1 The outline dimensions of the vertical pumps, including outline and detail drawings for each major component and components with a significant function. These drawings shall reflect the "as-shipped" configuration of the equipment and instrumentation.

10.2.1.2 Details of construction.

10.2.1.3 Mounting dimensions and information required for the design of supports and foundations.

10.2.1.4 Operating weight and center of gravity of each vertical pump.

10.2.1.5 Dynamic loading on mounting flange.

10.2.1.6 The space required for the removal of components.

10.2.1.7 The weight of pump and motor fully assembled, motor assembly, pump assembly and individual pump systems: shaft, support columns, mounting plate, casing assembly, and prime/suction pipe.

10.2.1.8 The locations and identification of parts that are included in the parts list.

10.2.1.9 Wiring, schematic diagrams, and connection diagrams shall include wire gauges and fuse sizes applicable to the supplied units only.

10.2.1.10 The ASTM or equivalent designation for materials.

10.2.1.11 Any deviations from Section 5.5 requirements shall be submitted for Buyer approval.

10.2.1.12 Nameplate lists.

10.2.1.13 Dimensional record drawings per requirements of Section 6.4.2.

10.2.2 Procedures

Procedures shall include the following:

10.2.2.1 Welding procedures. The Seller shall submit all welding procedures for vertical pumps for review per 5.2.1

10.2.2.2 Procedures for repairs of rejected items or parts associated with the HFP piping.

10.2.2.3 Electrical component performance test procedures.

10.2.2.4 Seller's shipping preparation procedures, including initial startup and checkout procedures, instructions for final alignment checks and any other special instructions prior to initial startup in the facility.

10.2.2.5 Deleted

10.2.2.6 Special instruction for installing and maintaining any packing and seals for shafts, bearings, or similar items, include special instructions for extended storage (up to 8 years) or idle conditions prior to initial operation.

10.2.2.7 Procedure for all priming operations using an eductor or similar item, including special instructions and sequence for pump startup for all liquid level scenarios.

10.2.2.8 For in-place re-greasing (see Section 3.5.7.4), the Seller shall submit complete instructions of the remote re-lubrication requirements, including all materials needed, proper sequence, special remote crane operator instructions.

10.2.2.9 Seller shall submit a written tolerance control procedure to establish and verify horizontal and vertical centerlines, precise horizontal and vertical measurements, flatness, and datum planes for dimensional measurement of vertical pumps (Section 3.5.6.5).

10.2.2.10 Seller shall submit cleaning procedures for austenitic stainless and nickel-based alloys (section 5.5.5).

10.2.2.11 Hydrostatic test procedure per requirements of Section 6.2.2.

10.2.2.12 Plumb lift test procedure. (Section 6.6)

10.2.2.13 Material control procedure. (Section 4.5)

10.2.3 Inspection and Test Reports

10.2.3.1 Records of repairs and rejected items or parts, as needed.

10.2.3.2 Electrical component performance test reports.

10.2.3.3 Bench test mechanical performance reports. (Section 6.3)

10.2.3.4 Performance test reports, including priming, NPSH, ASD performance, preliminary curve and test data per Section 6.3.

10.2.3.5 Plumb lift test report. (Section 6.6)

10.2.3.6 Hydrostatic test report. (Section 6.2)

10.2.3.7 Surface finish report. (Sections 5.1.3 and 3.5.7.8)

10.2.4 Calculations

Calculations shall be submitted for the Buyer's review and permission to proceed, and shall be in accordance with 24590-WTP-3PS-G000-T0014, *Engineering Specification for Supplier Design Analysis*.

10.2.4.1 Seismic analysis (Section 3.8).

10.2.4.2 Lifting lug stress analysis. (Section 3.5.4)

10.2.4.3 Pump critical speed analysis (Section 6.3.8)

10.2.5 Manuals

Manuals and instructions shall be supplied per form G-321-E and shall include the following:

10.2.5.1 Erection and installation manuals that provide complete detailed procedures for installing and placing equipment in initial operation. The manuals shall include all erection and installation drawings. A minimum of one set of each manual type shall be provided.

10.2.5.2 Operation and maintenance manuals that provide complete detailed descriptions of components and accessories, including datasheets showing design, construction and performance data for equipment. Manuals shall include startup, shutdown, and idle procedures. Manuals shall include drawings required for operation, maintenance and repair, maintenance requirements, instructions, operational troubleshooting guides.

10.2.5.3 Instruction manuals shall cover every item purchased, including materials that the Seller has obtained from a subcontractor. The Seller shall obtain such manuals and lists, and submit them to the Buyer.

10.2.5.4 The Seller shall provide instructions regarding site storage, preparation, and protection of equipment after installation and prior to operation per 24590-WTP-3PS-G000-T0003, *Engineering Specification for Packaging, Handling and Storage Requirements*.

10.2.5.5 The Seller shall submit their QA manual per Section 8.1.2.

10.2.5.6 Seller deviations from the QA requirements of Section 8 shall be submitted to the Buyer per Section 8.2.

10.2.6 Certificates of Conformance

10.2.6.1 The Seller shall provide certificates of conformance demonstrating compliance with all applicable standards, specifications, and drawings in the fabrication of the pump and HFP piping as detailed in this specification.

10.2.6.2 The Seller shall certify that lifting lugs are suitable for the safe, balanced lifting and handling of the equipment per Section 3.5.4 of this specification.

10.2.7 Schedule

Lists and schedules shall include the following:

10.2.7.1 Schedule of engineering and fabrication

10.2.7.2 Parts list, and cost for parts and items subject to deterioration and replacement

10.2.7.3 List of recommended spare parts

10.2.8 Materials Certificates/Statistics

10.2.8.1 Material certificates of compliance shall be submitted for components of the CM pumps.

10.2.8.2 Material Test Reports shall be supplied for the HFP piping and weld materials used in interfacing the HFP pipe with PUREX nozzle and pipe supports.

10.2.9 Data

Data shall include the following:

10.2.9.1 Buyer's motor and vertical pump data sheets, completely filled out by the Seller, showing all information required to determine that the units are of the design and materials specified herein.

10.2.10 Design and Technology Selection Criteria

10.2.10.1 Bearing Grease Selection

If an alternative grease for bearings is recommended other than that specified (Section 3.5.7.5), all appropriate technical information shall be submitted for Buyer acceptance.

10.2.10.2 Deleted

10.2.11 Material Safety Data Sheets

Material Safety Data Sheets shall be provided for all oils, greases, paints, preservatives, and all other chemicals and chemical products that are shipped with the vertical pumps.

10.2.12 Accessibility and Maintenance Requirements

The Seller's recommended accessibility and maintenance requirements for each piece of equipment shall be included in the Seller's submittal per Section 3.9.

Figure 1 HLW Remote Vessel Mounted Vertical Transfer Pumps

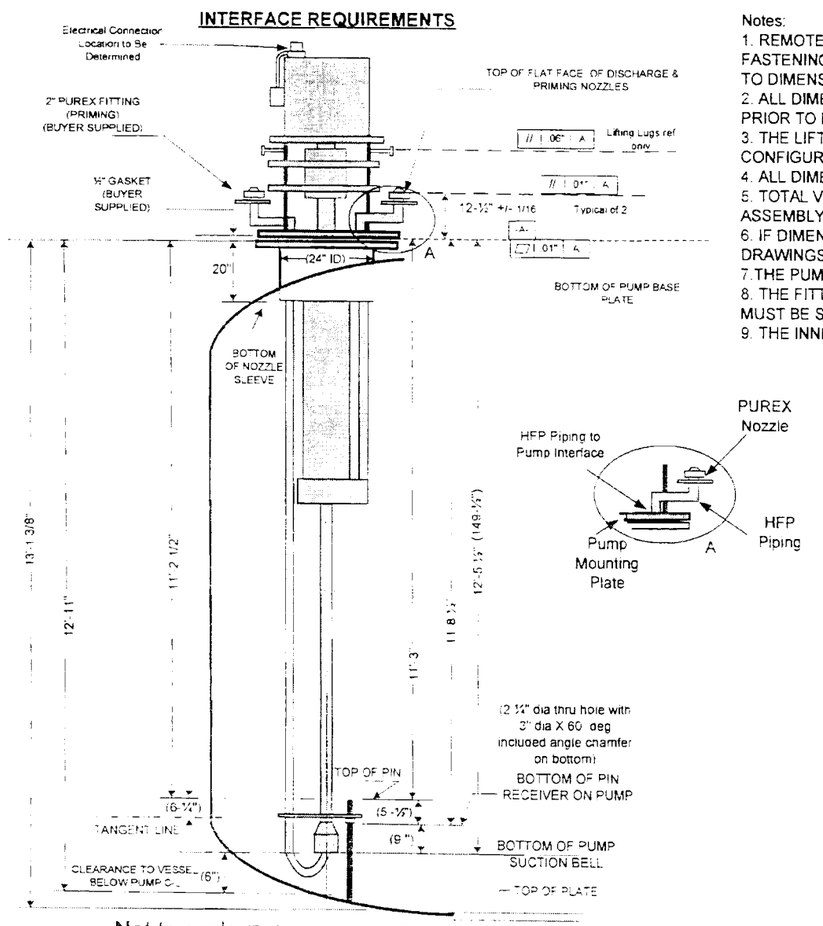

Not to scale (Reference Vessel Drawings for more Detail)

Notes:
1. REMOTE ASPECTS OF JUMPER CONNECTION, CRANE INSTALLATION/REMOVAL, ACME NUT FASTENING, AND ADJACENT TANK MOUNTED COMPONENTS, REQUIRE STRICT ADHERENCE TO DIMENSIONAL TOLERANCES SHOWN
2. ALL DIMENSIONS ARE APPROXIMATE. SELLER SHALL VERIFY DIMENSIONS WITH BUYER PRIOR TO FABRICATION
3. THE LIFTING LUG LOCATIONS WILL NEED TO ALTERED TO ACCOMMODATE PUMP DRIVE CONFIGURATION
4. ALL DIMENSIONS ARE IN INCHES
5. TOTAL VERTICAL HEIGHT FROM LIFTING HOOK TOP OF SADDLE TO BOTTOM OF PUMP ASSEMBLY NOT TO EXCEED 17'-7¾" DUE TO REMOVAL SPACE LIMITATIONS
6. IF DIMENSIONS ON THIS FIGURE CONFLICT WITH THE VESSEL DRAWINGS, THE VESSEL DRAWINGS ARE TO GOVERN
7. THE PUMP AND HFP PIPING MUST BE SELF DRAINING.
8. THE FITTINGS ON THE PIPE CONNECTED TO THE PUREX NOZZLE AND THE PUMP BASE MUST BE SCHEDULE 80 45 DEGREE FITTINGS AND DESIGNED TO 24590-WTP-PS02-T0002
9. THE INNER SURFACE OF THE HFP PIPING SHALL BE ELECTRO POLISHED

TOLERANCES ON ALL DIMENSIONS, UNLESS OTHERWISE NOTED, TO BE

	DECIMALS	
ANGLES ±0° 30'	.X	± .1
FRACTIONS ± 1/8"	.XX	± .05
SURFACE FINISH 125	.XXX	± .010

Figure 2 **Top View of Pump and Pump Stabilizer Pin**

NOTES:

1. THE ELECTRICAL CONNECTORS AND PROCESS CONNECTORS WILL BE SUPPLIED BY THE BUYER. TOLERANCES ARE FIXED; HOWEVER, LOCATIONS FOR THESE CONNECTORS MAY BE SUBJECT TO REALIGNMENT. CONDUIT IS INSTALLED BETWEEN THE CONNECTORS AND THE MOTOR JUNCTION BOX BY SELLER.
2. ALL DIMENSIONS ARE APPROXIMATE SELLER SHALL VERIFY DIMENSIONS WITH BUYER PRIOR TO FABRICATION.
3. ACME NUT CUP TO BE SUPPLIED BY SELLER ADDITIONAL NUT RETAINERS REQUIRED FOR MOTOR REMOVAL NOT PICTURED FOR CLARITY
4. TOLERANCES SHALL BE CONTROLLED SUCH THAT THE MAXIMUM DEVIATION FROM THE MASTER DOWEL PIN TO CENTER OF DISCHARGE CONNECTOR & ELECTRICAL CONNECTOR IS < 0.010".
5. IF DIMENSIONS IN THIS FIGURE CONFLICT WITH THE VESSEL DRAWINGS, THE VESSEL DRAWINGS ARE TO GOVERN.

Attachment 2A [Top view of pump interfaces]

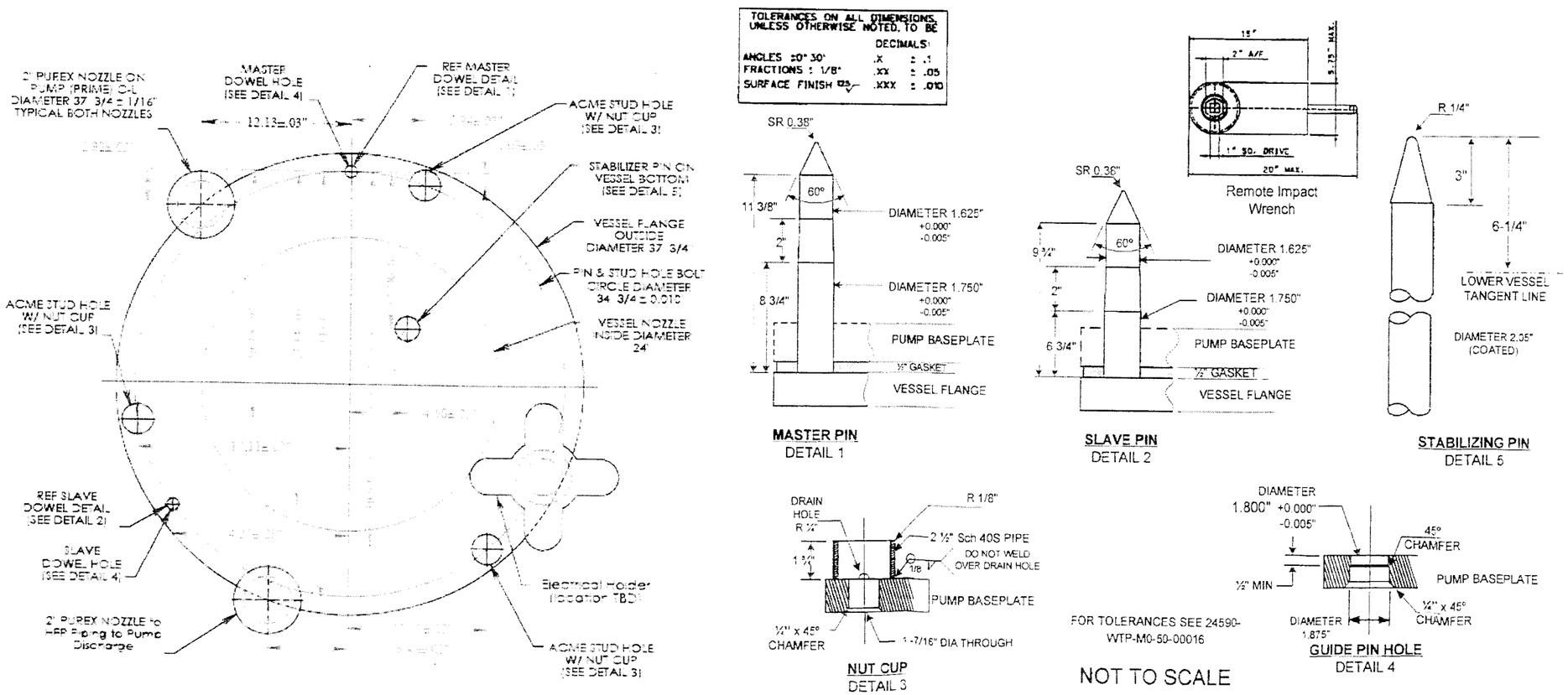

Appendix A

Pump Operation Summary

Appendix A
Pump Operation Summary

#	Pump ID#	Pump Description	Pump Frequency [hours between batches]	Pump Duration [See Note 1) [minutes]
1	HFP-PMP-00005A	Melter 1 Feed Preparation Vessel Pump	57	100 (transfer) / recirc.
2	HFP-PMP-00005B	Melter 1 Feed Preparation Vessel Pump	57	100 (transfer) / recirc.
3	HFP-PMP-00007	Melter 1 Feed Vessel Pump	57	100 (transfer) / recirc.
4	HFP-PMP-00018A	Melter 2 Feed Preparation Vessel Pump	57	100 (transfer) / recirc.
5	HFP-PMP00018B	Melter 2 Feed Preparation Vessel Pump	57	100 (transfer) / recirc.
6	HFP-PMP-00017	Melter 2 Feed Vessel Pump	57	100 (transfer) / recirc.

Note 1: Finite times shown in this column are for batch transfers only. All pumps shown as recirc. should be designed for continuous service. All other pumps should be designed for intermittent service in addition to transfer durations shown (nom. 30 min. per day)

Appendix B

Deleted

Appendix C

Connectors

Appendix C
Connectors

1.0 General

Certain connectors shown will be supplied by the Buyer, as described in this specification and in Appendix D, and the Seller shall be responsible for incorporating the proper interfaces and locations into their final designs. The final selection of connector size and type is subject to change and shall be approved by the Buyer prior to fabrication of the pumps.

2.0 Connector Selection

2.1 Remote Process Connectors – HLW (HFP)

The remote process (discharge) and priming (eductor) connectors will be supplied by the Buyer. (Drawings of the Connectors are DOE ECI and are included in the MR.)

2.2 Remote Electrical Connectors – HLW

The remote electrical connector, or electrical lower holder, will be supplied by the Buyer. (A drawing of the electrical connector is included in the MR).

2.3 Grease-fittings shall be male Staubli RBE11 valved plugs supplied by the Seller.

Appendix D

Items Supplied by Buyer (GFP)

Appendix D
Items Supplied by Buyer (GFP)

Item No.	Description	Quantity
1	Remote electrical connectors with all required internal components. Reference Drawings provided in MR.	6
2	Mating to remote Electrical connector assembly, with all required internal components to be installed by Seller, with 30 feet of shielded 8 AWG wire (required for testing, to be assembled by Seller)	1 for each remote Electrical Lower Holder
3	*Discharge Nozzle – Reference ECI PUREX Male Connector,* 24590-WTP-M61-P23T PT7	6
4	*Prime Nozzle – Reference ECI PUREX Male Connector,* 24590-WTP-M61-P23T PT7	6
5	Deleted	
6	Deleted	
7	Hook profile, hook thickness and lift beam clearance dimensions for Seller to fabricate Lifting Beams (required for plumb lift test)	1 set for lifting lug configuration
8	Vertical Connector Assemblies (required for hydraulic testing)	2 total (1 for discharge, 1 for eductor)

Appendix E

Final Dimensional Measurements of Pumps by Seller

Appendix E
Final Dimensional Measurements of Pumps by Seller

1.0 Purpose

The Seller shall perform dimensional measurements for all vertical pumps, all nozzles, and all appurtenances at the Seller's shop. All as-built dimensions obtained thereby shall be recorded as required in Section 6.4.1 of Specification 24590-WTP-3PS-MPC0-T0009. The Seller shall give the Buyer opportunity to witness all final dimensional measurements and review all dimensional records prior to shipment.

2.0 Scope

Items Included – Seller shall furnish the following:

- Level precision floor surface or surfaces
- Instrument supports, platforms, ladders, stairs, and guardrails
- Overhead crane access, if required
- Vertical pump support stand
- Lifting beams seller provided
- Optical instruments and scales

3.0 Requirements – Shop Facilities

3.1 The Seller shall provide a measurement area for final dimensional verification. This will require approximately 30 feet of headroom to the bottom of the crane hook. A vertical pump stand with a level, flat surface matching the tolerances of the pump support plates is required for mounting pumps during dimensional check. Clear space of at least 7 feet shall be available surrounding the remote vertical pump.

3.2 The measurement area shall be temperature controlled above 70 °F. The same temperature within 5 °F shall be maintained during the dimensional measurement by the Seller.

3.3 After final Seller dimensional checks and as-built dimensional records are completed as specified in Section 6.4.1 of Specification 24590-WTP-3PS-MPC0-T0009, and prior to preparation for shipment, each remote vertical pump assembly shall be reviewed by the Buyer against this dimensional record.

3.4 The Seller shall make final dimensional measurements using their own equipment, such as calibrated jig transits, tilting levels, and calibrated and certified scales. Scales shall be graduated to 0.01 inch. The optical instruments shall be equipped with micrometers graduated to

0.001 inch. The Seller may alternatively choose to use electronic theodolites calibrated to 0.001 inch.

3.5 The vertical pump support-plate face shall be profiled at 15 ° intervals and plotted for record. All connector nozzles shall be checked at a minimum of four points for parallelism with vertical pump support-plate face.

3.6 The Seller shall allow adequate time to perform final dimensional measurement of each pump in the presence of the Buyer's representative to witness/observe the Seller's inspection activity. The Seller shall also provide appropriate notification to the Buyer for each witnessed inspection activity. The Seller has sole responsibility for quality control inspections of their products.

3.7 There shall be no visual interference (such as arc welding or equipment movement) with the optical measurements performed by the Seller.

3.8 The Seller shall provide rigid supports for optical transits and levels. These supports shall be freestanding and not touching the remote vertical pumps. Substantial platforms, ladders, stairs, and handrails shall be provided, all meeting OSHA requirements. The instrument supports shall be set up a minimum of 7 feet away from the vertical pump stand and at least 3 feet higher.

3.9 The Seller shall submit the following drawings for the Buyer's review:

a The measurement enclosure area
b The vertical pump stand
c The optical instrument supports
d Substantial platforms, ladders, and handrails
e The crane interface

3.10 The Seller shall furnish one balanced lifting beam, or one for each lifting lug configuration as necessary, for the plumb lift testing of the vertical pumps.

3.11 The Seller shall provide adequate lighting to facilitate the optical dimensional measurements. Lighting should generally be 100-foot candle average where measurements will be made.

Appendix F

In-Structure Response Spectra

Appendix F
In-Structure Response Spectra

In-structure response spectra at the vessel support points in three orthogonal directions, as authorized in CCN 158072, are given in figures 561 and 562 on the following pages. Peak accelerations from the 3% damping curves in these response spectra (identified with arrows) will be used as seismic accelerations at vessel nozzles for the Transfer Pumps. Appropriate factors shall be used with these values in accordance with specification 24590-WTP-3PS-SS90-T0001. In addition, to account for response spectra amplification through the vessel, an extra factor of 1.5 shall be integrated into the seismic acceleration values for seismic analysis of the Transfer Pumps.

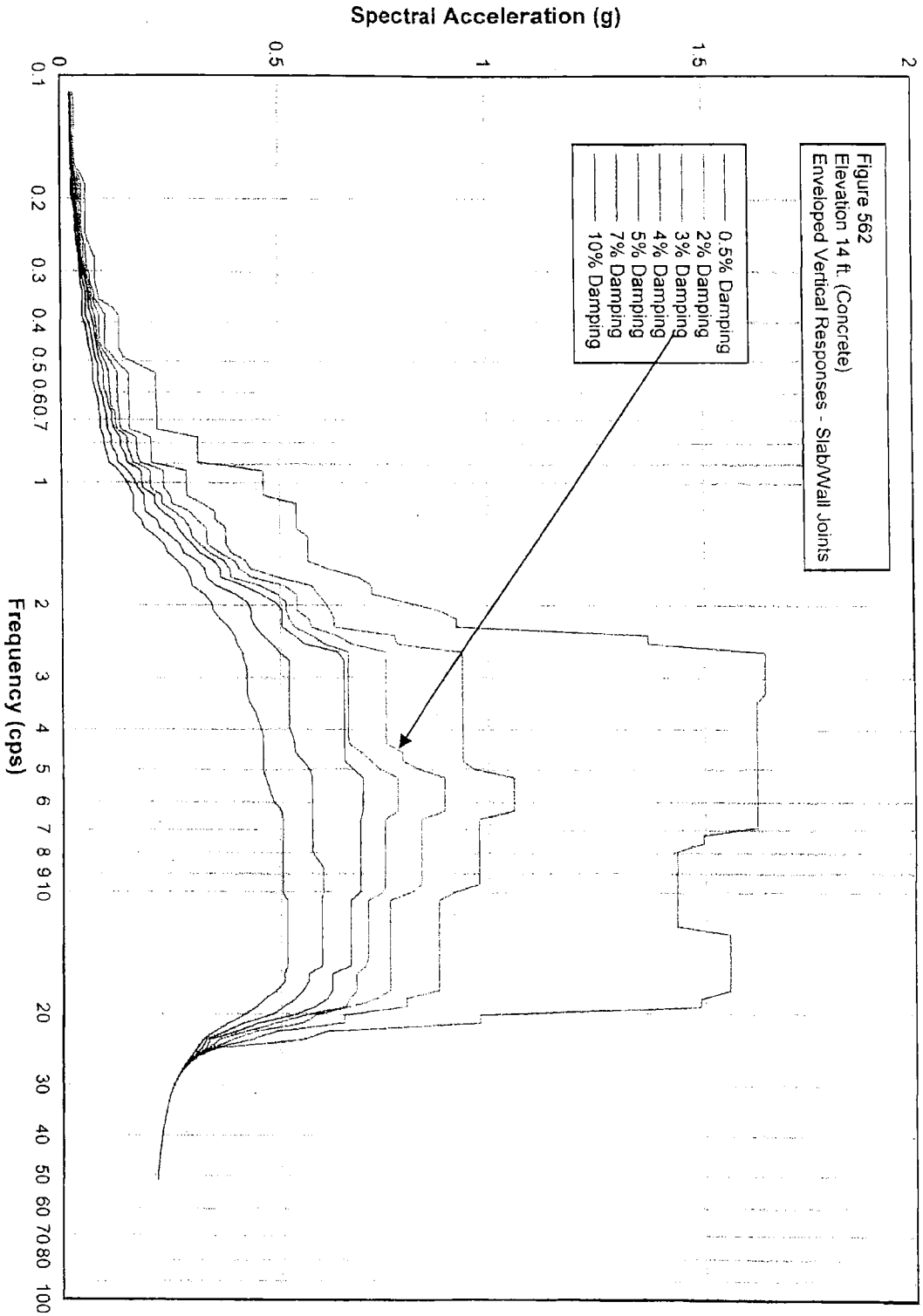

RPP-WTP HLW Vitrification Facility ISRS
Calc No.: 24590-HLW-S0C-S15T-00057, Rev. A

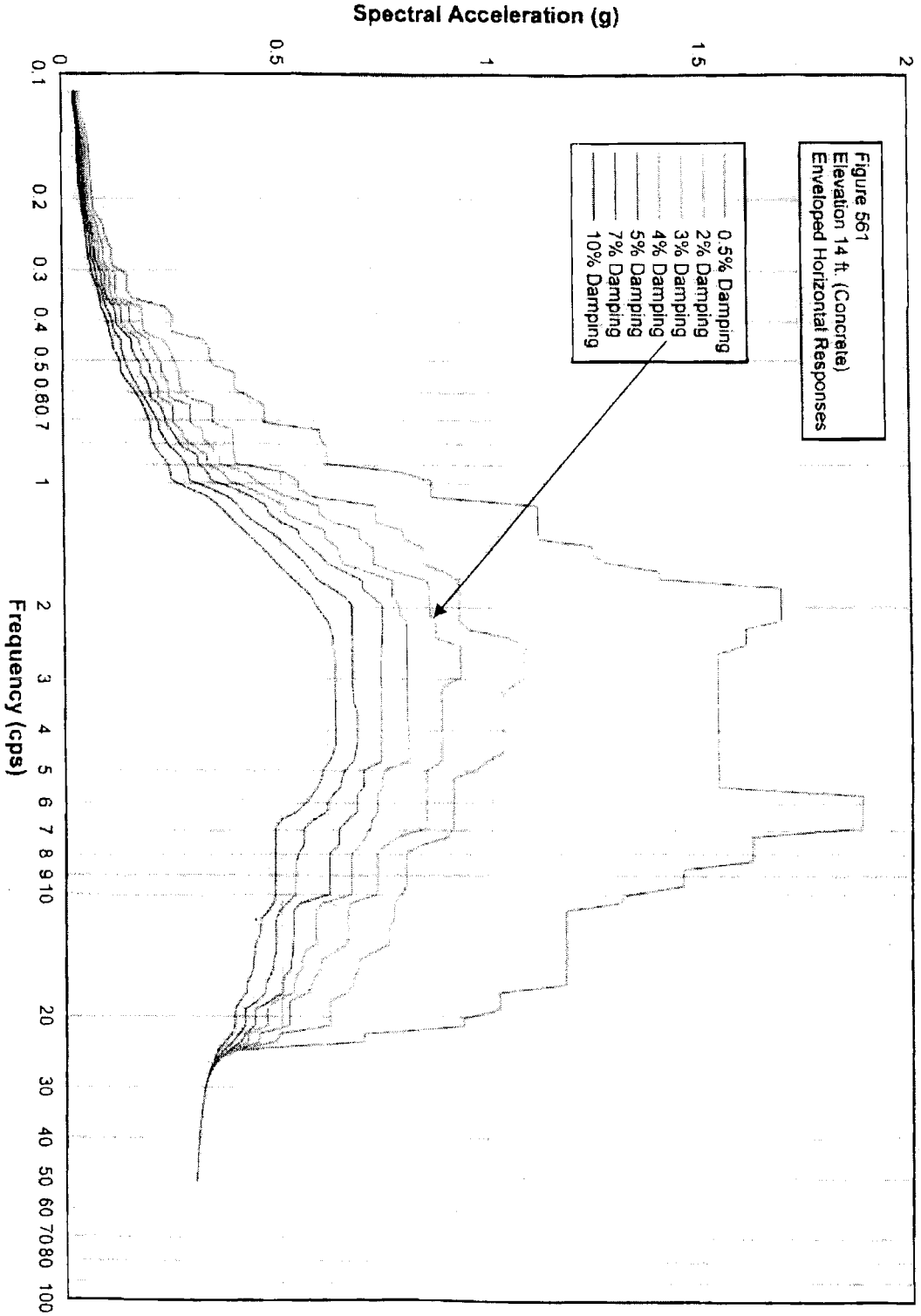

RPP-WTP HLW Vitrification Facility ISRS
Calc No.: 24590-HLW-S0C-S15T-00057, Rev. A

Appendix G

AISC M016 SRD Tailoring

Appendix G
AISC M016 SRD Tailoring

Appendix G-1 24590-WTP-SRD-ESH-001-02, Rev 5i, Appendix C.9

9.0 AISC M016, Manual of Steel Construction, Allowable Stress Design (ASD)

Revision: 9th Edition
Sponsoring Organization: American Institute of Steel Construction

WTP Specific Tailoring

The following tailoring of M016 is required for use by the WTP contractor as an implementing standard for design of structural steel for Seismic Category III and IV SSCs.

No specific section

The design of structural steel utilizes the requirements of the *Specification for Structural Steel Buildings Allowable Stress Design and Plastic Design, June 1, 1989 with Commentary* as found in Part 5 of the AISC M016, *Manual of Steel Construction*. The current reference for this specification is:

AISC S335-89, ***Specification for Structural Steel Buildings Allowable Stress Design and Plastic Design June 1, 1989 with Commentary***.

Justification: At the time the AISC M016 Manual was first published, AISC had not assigned a publication number for the specification in Part 5. Beginning in March 2002, AISC implemented a new publication numbering system. Under this system, every AISC standard and publication was assigned a reference number. The *Specification for Structural Steel Buildings Allowable Stress Design and Plastic Design, June 1, 1989* found in Part 5 of M016 can now be referenced as AISC S335-89.

No specific section

Load combinations for design of structural steel members utilize those identified in UBC 97, Section 1612.3.

Justification: These load combinations represent the commercial requirements for allowable stress design of structural steel. Use of these load combinations will ensure compliance with the commercial design in accordance with the UBC.

No specific section

Seismic detailing requirements shall be in accordance with UBC 97, Chapter 22, Division V, Section 2214, for moderate seismic risk structures.

Justification: The requirements contained in this section contain accepted industry practice for design of important commercial steel structures. Use of this section will ensure compliance with the commercial design in accordance with the UBC.

Appendix H

ASME B31.3 SRD Tailoring

Appendix H
ASME B31.3 SRD Tailoring

Figure H-1 24590-WTP-SRD-ESH-001-02, Rev 5r, Appendix C.26

26.0 ASME B31.3-1996, Process Piping

Revision: 1996
Sponsoring Organization: ASME

WTP Specific Tailoring

The following tailoring of ASME B31.3, *Process Piping*, is required for use by the WTP contractor as an Implementing Standard for: (1) the fabrication and installation of those portions of the C5V ductwork that are being embedded in concrete, (2) the use of ASME B16.9 welding tees in accordance with ASME B31.3-2002, (3) use of vacuum box leak testing, (4) the ASME B31.3-1998, paragraph 345.2.3(c), allowance for not leak testing closure welds outside of a closed cell (black cell) and/or hard-to-reach area, (5) the test pressure that is used for piping systems subjected and designed to HPAV events, and (6) design for HPAV Detonation/Deflagration loads and associated thermal gradients.

- The tailored sections of ASME B31.3 applicable to embedded ductwork will only be utilized to the extent that it will cover the fabrication, installation, and inspection (and associated testing) of Category D fluid service piping being used as C5 ductwork. Air testing requirements for this ductwork will be compliant with ASME AG-1. Below is a description of those portions of ASME B31.3 that apply to fabrication, installation, and inspection of Category D fluid service piping and the sections of the SRD that they will apply to.
- The tailored sections of ASME B31.3 applicable to welding tees will only be used for ASME B16.9 welding tees. As long as the stress intensification factors from ASME B31.3-2002 are used in the stress analysis for the welding tees, welding tees fabricated to either the 1996 or the 2002 edition of ASME B31.3 can be used. Below is a description of those portions of ASME B31.3, Appendix D, Table D300, that apply to welding tees and the section of the SRD to which they will apply.
- The tailored paragraphs of ASME B31.3 applicable to vacuum box leak testing, in lieu of hydrostatic or pneumatic leak testing, will only be used to leak test full penetration circumferential piping field butt welds inside a closed cell (black cell) and/or hard-to-reach area as defined in Appendix M, out to the first isolation component outside the closed cell (black cell) and/or hard-to reach area. Further, if the 100 % volumetric inspection using ultrasonic examination per ASME B31.3 paragraph 344.6, is conducted for welds to be vacuum box tested, then the ultrasonic examination shall be conducted using a method that creates and maintains a reproducible computerized image(s) of the entire weld in the axial and radial direction.
- The tailored paragraphs of ASME B31.3 adopting the provisions of ASME B31.3 (c) - 1998 Addendum paragraph 345.2.3(c) are applicable to all ASME B31.3 piping in all facilities except for closure welds in closed cells (black cell) and/or hard-to-reach areas.

Figure H-1 24590-WTP-SRD-ESH-001-02, Rev 5r, Appendix C.26 (Continued)

Piping providing a confinement function in accordance with SRD 4.4-3 will comply with the following sections of ASME B31.3-1996, *Process Piping*. These sections of ASME B31.3 are applicable for embedded ductwork.

Chapter 3, Materials
Chapter 5, Fabrication
Table 341.3.2, Visual acceptance criteria for Category D fluid service piping

Justification: Due to wall thickness requirements of duct embedded in concrete, piping materials are required. ASME B31.3 will apply to materials, fabrication, and inspection standards as appropriate. Testing requirements for nuclear air treatment systems will be consistent with ASME AG-1.

Piping providing a confinement function in accordance with SRD 5.1-2 will comply with the following sections of ASME B31.3-1996, *Process Piping*. These sections of ASME B31.3 are applicable for embedded ductwork.

Chapter 3, Materials
Chapter 5, Fabrication
Table 341.3.2, Visual acceptance criteria for Category D fluid service piping

Justification: Due to wall thickness requirements of duct embedded in concrete, piping materials are required. ASME B31.3 will apply to materials, fabrication, and inspection standards as appropriate. Testing requirements for nuclear air treatment systems will be consistent with ASME AG-1.

Piping providing a confinement function in accordance with SRD 4.2-2 will comply with ASME B31.3-1996, *Process Piping*, with the following modification:

In Table D300, the description of welding tee per ASME B16.9 shall be revised so it is consistent with that shown in Table D300 of ASME B31.3-2002:

		Stress Intensification Factor [Notes (2), (3)]			
Description	**Flexibility Factor k**	**Out-of-Plane, i_o**	**In-Plane i_i**	**Flexibility Characteristic, h**	**Sketch**
Welded tee per ASME B16.9 [Notes (2), (4), (6), (11), (13)]	1	$\frac{0.9}{h^{2/3}}$	$3/4\ i_o + 1/4$	$3.1\frac{\bar{T}}{r_2}$	Same as ASME B31.3-1996

This means that for welding tees per ASME B16.9, note 11 in Table D300 is also changed to:

(11) If $r_x \geq 1/8D_b$ and $T_c \geq 1.5T_{ave}$, a flexibility characteristic of 4.4 T_{ave}/r_2 may be used.

Figure H-1 24590-WTP-SRD-ESH-001-02, Rev 5r, Appendix C.26 (Continued)

Justification: The use of a lower flexibility characteristic for welding tees per ASME B.16.9 in accordance with ASME B31.3-2002 will increase both the out-of-plane and in-plane stress intensification factors. The increased stress intensification factors will reduce the allowable out-of-plane and in-plane moments that can be applied to the welding tee and keep the calculated stress below the stresses allowable by ASME B31.3-1996.

Safety piping within the scope of SRD 4.2-2 shall comply with ASME B31.3-1996, Chapter V, Paragraph 345, using the following approach for vacuum box leak testing. Vacuum box leak testing, in lieu of hydrostatic or pneumatic leak testing, may be used to leak test full penetration circumferential piping, field butt welds inside a closed cell (black cell) and/or hard-to-reach area as defined in Appendix M, out to the first isolation component outside the closed cell (black cell) and/or hard-to-reach area, only under the following conditions:

Vacuum Box Leak Test Method - The vacuum box leak test shall be in accordance with a Bubble Test - Vacuum Box Technique method specified in ASME BPV Code, Section V, Article 10, Appendix II, subject to the requirements listed below:

(a) Sensitivity of the test shall be demonstrated to be not less than 1E-3 atm-ml/sec at 15 psig.
(b) The test pressure shall be a partial vacuum of at least 7 psi below atmosphere, applied to the outside of the weld.
(c) The required partial vacuum shall be maintained for at least 20 sec examination time.

In addition, the following limitations and restrictions shall apply to the application of vacuum box leak testing in lieu of a hydrostatic or a pneumatic leak test:

- Vacuum box leak testing will only be used to leak test circumferential piping field welds inside a closed cell (black cell) and/or hard-to-reach area (as defined in SRD Appendix M). This includes any welds in extensions of piping systems contained or originating in accessible areas between the closed cell (black cell) and/or hard-to-reach area boundary and the first isolation valve or device beyond the closed cell (black cell) and/or hard-to-reach area boundary;
- It shall only be used for piping field welds where required to avoid damage to components, ensure the safety to construction workers, perform leak tests of field welds where physical limitations prevent hydrostatic or pneumatic leak testing as prescribed in ASME B31.3-1996 paragraph 345.4 and paragraph 345.5 respectively;
- Pipe welds that are to be vacuum box leak tested will be assessed for suitability. The number of welds to be vacuum box leak tested shall be limited to a maximum of three welds between termination points (two termination or closure welds and one intermediate weld) on a given pipe system except where physical limitations prevent examination by hydrostatic or pneumatic leak testing. DOE will be informed of such exceptions, and may at its discretion and within 48 hours of being informed, respond to BNI on the suitability of the use of vacuum box leak testing for such instances. Termination points may be tanks, vessels, valves, etc. (Specifically excluded from the definition of termination points are junctions where the piping changes design class). This could be either the last two closure welds in a closed cell (black cell) and/or hard-to-reach area or the last closure weld in the closed cell (black cell) and/or hard-to-reach area and the last closure weld outside the closed cell (black cell) and/or hard-to-reach area. In addition, vacuum box leak testing would be

Figure H-1 24590-WTP-SRD-ESH-001-02, Rev 5r, Appendix C.26 (Continued)

permitted for the connection welds between construction modules if this is limited to one module-to-module weld per piping run within the cells. This is in addition to termination welds on the piping run. A module is defined as a pre-leak-tested subassembly containing multiple pipe spools;

- Vacuum box leak testing shall be limited to full penetration girth butt welds, on straight pipe or between straight pipe and pipe components of the same nominal pipe size and same wall thickness on both sides of the weld at the weld location. The following configurations are candidates for vacuum box testing:
  (a) Straight pipe to straight pipe connection butt welds
  (b) Straight pipe to 90□ elbow connection butt welds
  (c) Straight pipe to 45□ elbow connection butt welds
  (d) Straight pipe to concentric reducer connection butt welds
  (e) Straight pipe to eccentric reducer connection butt welds
  (f) Straight pipe to butt welding tee connection butt welds
  (g) Straight pipe to butt welding reduced outlet tee connection butt welds
  (h) Straight pipe to valve nozzle connection butt welds
  (i) Straight pipe to tank or vessel nozzle connection welds
  (j) Straight pipe to safe-end of a weldolet connection butt welds - full penetration butt welded connection only
  (k) Straight pipe to pipe cap connection butt welds
  Prior to the application of vacuum box testing using any of the candidate configurations on piping butt welds at the WTP, the Contractor must successfully demonstrate to the DOE, for the candidate configuration, that (1) all portions of the weld to be inspected are visible and can be inspected in accordance with the ASME Boiler and Pressure and Vessel Code, Section V, Article 10, Appendix II - 1995; (2) the vacuum box can adequately maintain a partial vacuum of 7 psid; and (3) vacuum box leak testing can be accomplished in the time limits and other requirements established by this procedure. The DOE shall be advised at least 7 days in advance of any demonstration to qualify a new weld configuration so that they can witness the demonstration. The Contractor shall document any demonstration relied upon to justify the use of vacuum box leak testing on a new configuration. Further, vacuum box leak testing shall be conducted with a vacuum box that completely encapsulates the weld, at the test location;

- All welds shall be 100 % volumetrically inspected in accordance with ASME B31.3-1996, paragraphs 344.5 or 344.6. If the 100 % volumetric inspection is conducted using ultrasonic examination per ASME B31.3-1996 paragraph 344.6, then the ultrasonic examination shall be conducted using a method that creates and maintains a reproducible computerized image(s) of the entire weld in the axial and radial direction;

- It shall be limited to welds made using the Orbital welding machines. The only exception is that vacuum leak box testing may be used on manual welds if the 100 % volumetric inspection was conducted by radiography per ASME B31.3-1996 paragraph 344.5;

- The piping systems and or components on both sides of the weld to be vacuum box leak tested shall have been subjected to a hydrostatic leak test in accordance with ASME B31.3-1996 paragraph 345.4, a pneumatic test in accordance with ASME B31.3-1996 paragraph 345.5, a combination pneumatic-hydrostatic leak test in accordance with ASME B31.3-1996 paragraph 345.6, or in the case of components, leak tested in accordance with the Code or Standard applicable to the design of the component;

Figure H-1 24590-WTP-SRD-ESH-001-02, Rev 5r, Appendix C.26 (Continued)

- At a minimum, a flexibility analysis in accordance with ASME B31.3-1996 paragraphs 319.4.2 (a) and (b) shall be required on any piping systems that contain welds that are to be vacuum leak box tested. In addition, a comprehensive flexibility analysis in accordance with ASME B31.3-1996 paragraphs 319.4.2 (c) and (d) shall be performed on any piping systems that contain welds that are to be vacuum box leak tested when the piping systems have a design temperature greater than or equal to 150 °F;
- For manual welds, the requirements of ASME B31.3-1996 paragraph 344.7.1 (a) through (g) shall be invoked on any weld to be vacuum box leak tested with the exception that the requirement of subparagraph 344.7.1 (e) "... aided by liquid penetrant or magnetic particle examination when specified in the engineering design" shall not be required. For welds made using Orbital welding machines, the requirements of ASME B31.3-1996 paragraph 344.7.1 (a), (b), (c), (d), and (g) shall be invoked. The requirements of 344.7.1 (e) and (f) shall not be required. The implementation of these requirements shall be documented in the weld inspection report;
- Pipe welds and the associated line numbers that are to be vacuum leak box tested shall be identified in advance of the testing. This identification shall be documented in the controlled document Weld List, which must include this information prior to the initiation of any vacuum box leak testing associated with those welds and line numbers. It is understood that the controlled document Weld List may need to be revised and updated periodically through the construction phase of the WTP Project; and
- The following special requirements shall be placed on the training programs used to certify the technicians that will be conducting the vacuum box leak tests:

  1. The BNI Construction Manager shall pre-approve the technician qualifying examination(s) for vacuum box leak testing;
  2. The BNI Construction Manager shall pre-approve the qualifications of each Level III technician preparing or giving the examinations for vacuum box leak testing;
  3. DOE ORP at their discretion shall reserve the right to observe any and/or all practical leak test examinations and review of the results of any and/or all written vacuum box leak test examinations;
  4. The minimum topical content of each Level II examination shall be specified by BNI, and approved by DOE;
  5. The 80 % correct criteria for passing the examination shall apply to each part of the three part examinations that are to be given;
  6. BNI shall provide reasonable assurance that they will take adequate measures to assure the integrity of written examination is maintained; and
  7. There shall be several versions of each examination in use to assure Level II knowledge and ability concerning vacuum box leak testing is confirmed.

Justification: The requirement for the vacuum box leak test sensitivity is consistent with the ASME B31.3 requirement for a sensitive leak test as given in ASME B31.3-1996 paragraph 345.8 and for at least 7 psi vacuum and an examination time of at least 20 seconds. The limitations in using vacuum box leak testing better define when this method can be used. DOE ORP may further change the definition and application of these special vacuum box leak testing criteria based on the Contractor's experience with their use, or the Contractor's request for a change.

Figure H-1 24590-WTP-SRD-ESH-001-02, Rev 5r, Appendix C.26 (Continued)

Piping system closure welds outside of a closed cell (black cell) and/or hard-to-reach area as defined in SRD Appendix M, shall comply with the requirements of ASME B31.3-1998, subparagraph 345.2.3(c). When ASME B31.3-1998, subparagraph 345.2.3(c) is invoked the following restrictions shall apply:

- It shall not be invoked on any closure welds on piping systems in a closed cell (black cell) and/or hard-to-reach area as defined in SRD Appendix M. This includes any welds in extensions of piping systems contained or originating in a closed cell (black cell) and/or hard-to-reach area, between the closed cell (black cell) and/or hard-to-reach area boundary and the first isolation valve, or device beyond the closed cell (black cell) and/or hard-to-reach area boundary;
- It shall only be invoked on full penetration butt welds in straight pipe, full penetration butt welds at the safe-end of an equipment nozzle, or full penetration butt welds at the safe-end of branch connections. [The safe-end is defined as the piping to equipment nozzle connecting weld or the branch connection to branch piping connecting welds.];
- The requirements of ASME B31.3(c) - 1998, subparagraph 345.2.3 (c) shall be met;
- The piping systems and or components on both sides of the closure weld shall have been subjected to a hydrostatic leak test in accordance with ASME B31.3-1996 paragraph 345.4, a pneumatic leak test in accordance with ASME B31.3-1996 paragraph 345.5, a combination pneumatic-hydrostatic leak test in accordance with ASME B31.3-1996 paragraph 345.6, or in the case of components leak tested in accordance with the Code or Standard applicable to the design of the component;
- For manual welds, the requirements of ASME B31.3-1996 paragraph 344.7.1 (a) through (g) shall be invoked with the exception that the requirement of subparagraph 344.7.1 (e) "...aided by liquid penetrant or magnetic particle examination when specified in the engineering design" shall not be required. For welds made using the Orbital welding machines, the requirements of ASME B31.3 - 1996 paragraph 344.7.1 (a), (b), (c), (d), and (g) shall be invoked. The implementation of these requirements shall be documented in the weld inspection report;
- Piping welds and the associated line numbers for which the closure weld classification is invoked shall be documented in a controlled document Weld List;
- Piping components may include mechanical elements other than piping; and
- In addition, BNI shall incorporate these requirements into the appropriate specification. DOE-ORP may further change the definition and application on the use of closure welds based on the Contractor's experience with their use or the Contractor's request for a change.

Justification: This change does not change the safety function of any pressure boundary components. The requirement to leak test pressure boundary field welds is primarily to ensure the reliability of the welds in addition to the reliability provided by the other required examinations. The exception allowed by ASME B31.3-1998, paragraph 345.2.3 that the final weld connecting piping systems or components which have been successfully tested in accordance with paragraph 345 need not be leak tested provided the weld is examined in-process in accordance with paragraph 344.7 (a), (b), (c), (d), and (g) and passes with 100 % radiographic examination in accordance with paragraph 344.5 or 100 % ultrasonic examination in accordance with paragraph 344.6 provides adequate assurance that the weld is reliable and leak tight. The change continues to provide adequate safety since it requires that all piping closure welds that are not leak tested are in-process examined and 100 % volumetrically examined which exceeds the requirements of ASME B31.3-1996 for closure welds that are leak tested. The inability to hydrostatically or pneumatically leak test these closure welds does not affect the soundness of the welds.

Figure H-1 24590-WTP-SRD-ESH-001-02, Rev 5r, Appendix C.26 (Continued)

Design for Hydrogen Detonation/Deflagration Loads and Thermal Gradients

This section provides design criteria to determine the acceptable responses of piping systems and components to occasional loads that may result from HPAV events. Piping routes that fail to meet these criteria require preventive controls. The development of such criteria is permitted by B31.3 and is, therefore, not a deviation from it.
A best-estimate design tool may be used to determine the number of cycles for defined classes of HPAV events that differ in applicable structural design considerations for their accommodation subject to the following constraints to ensure consistency with safety analysis expectations:

1. The route specific factors that affect the potential for significant quantities of combustible gases to accumulate must be considered, including the maximum expected waste characteristics (i.e., combustible gas generation rate, temperature, viscosity), the proposed configuration of the route, and the related human and equipment failure rates.
2. An ignition probability of one is to be assumed at each maximum bubble size unless a technical basis for a lower probability is submitted to DOE-ORP and receives their concurrence.
3. The design tool shall not be used to exclude limiting events such as PRC-DDT that can occur for credible gas configuration conditions.
4. A defined class of events may be designated as structurally insignificant provided the included events are shown not to affect compliance with these Appendix C, B31.3 tailoring provisions.
5. Documentation of the model must be provided including the process for its application, the defined event classes, the parameters chosen, and the results.

For HPAV events, analysis will use 100/sec strain-rate dependent stress-strain curves for austenitic stainless steels (SS 304, 304L, 316 and 316L), which are used in the construction of WTP piping systems. Strain rate dependent properties will be developed based on a literature survey of academic, National Laboratory and industry information, covering the range of experimental test data to which the material in question will be subjected in service. Specifically, the experimental data requirements shall provide:

(a) A lower-bound estimate for strength over the strain rate and temperature regime of interest,
(b) Variation of yield strength with strain-rate and temperature,
(c) Variation of the rate of strain-hardening with strain-rate,
(d) Determination of a loading path-dependence to both the quasi-static (QS) and rate-dependent yield behavior,
(e) A loading path-dependence to both the quasi-static (QS) and rate-dependent strain-hardening behavior, and
(f) Development of an equation (or mathematical model) that describes the strength properties over the regime of interest.
(g) Scaled to the ASME Boiler and Pressure Vessel Code, Section VIII, Division 2, static, room temperature true stress-true strain curve.

Events Affecting Piping Located in Black Cells or Designated as Hard-To-Reach

Deflagrations events must meet the criteria of ASME B31.3-1996, *Process Piping*, and B31.3 Code Case 178, with appropriate consideration of deflagration pressure, sustained loads, and thermal gradients.

In evaluating Code Pressure Boundary for detonation events (including deflagration to detonation [DDT]

Figure H-1 24590-WTP-SRD-ESH-001-02, Rev 5r, Appendix C.26 (Continued)

transitions and reflected DDTs [PRC-DDT]), the straight pipe equivalent through-wall average strain will be limited to 0.2 % plastic strain using the 100/sec strain-rate dependent stress-strain curves, finite element time-history analysis, and end-of-life wall thickness.

For bends fabricated from straight pipe, the equivalent through-wall average strain will be limited to 0.2 % plastic strain using the 100/sec strain-rate dependent stress-strain curves, finite element timehistory analysis, and end-of-life wall thickness.

Fittings (tees, elbows, reducers) manufactured in accordance with B31.3 Paragraph 303 and the standards listed in B31.3 Table 326.1 are considered to be as strong as the matching pipe, due to the burst test requirements of the standards. BNI will verify that burst test methods (in lieu of calculation methods) have been used to validate representative fitting designs.

Fatigue damage from high frequency oscillations, bar waves, thermal gradients, pressure changes, and traveling detonation waves must be evaluated.

B31.3 302.3.5 limits the sum of longitudinal stresses due to pressure, weight, and other sustained loads to S_h, the basic Code allowable at maximum temperature. Combining only longitudinal stresses, as is done in B31.3 paragraph 302.3.6, does not consider the possible combination of hoop and longitudinal (axial) effects. For highly dynamic pressures during a traveling wave detonation event, the axial and hoop effects due to pressure are not necessarily both tensile, so a departure from the normal B31.3 methods (sum of longitudinal stresses) must be made to allow for the possible combination of hoop and axial effects. Therefore, for traveling wave detonation events, the combination of hoop and axial effects must be considered without exceeding the 100/sec strain-rate dependent yield; the dynamic interaction ratio added to the dead weight interaction ratio shall not exceed 1. Since DDT and PRC-DDT events are point events, the requirement to combine hoop and axial effects does not apply.

Events Affecting Piping Not Located in Black Cells or Designated as Hard-To-Reach

Except as noted below, all HPAV requirements in the BC/HTR apply. The criteria below are limited to affected piping systems and components located in the HLW Process Cells, or in the Pretreatment facility Hot Cell and C3 area bulges that serve as extensions of the Hot Cell.

For HPAV events that are anticipated to result in a PRC-DDT, detonation, or DDT, the maximum pressure that produces a straight pipe (or 3D bend, whichever is limiting) equivalent through-wall average strain of 0.2 % plastic strain, as determined above for the BC/HTR, will be permitted to be 1.5 times higher. This results in a plastic through-wall average strain estimated to be less than 2.5 %.

Other Components

Stresses in the nozzle/vessel intersection or in the dipped line due to the traveling detonation wave loading will be combined with stresses due to normal loads (PJM operation, if applicable, thermal expansion, internal pressure, weight) and the primary results limited to 1.2 times the normal condition allowable stress for that type of stress, as permitted by the ASME Boiler and Pressure Vessel Code, Sections VIII-1 and VIII-2, for occasional loads.

Stresses in pipe supports inside BC/HTR areas under combined weight, thermal expansion, and

Figure H-1 24590-WTP-SRD-ESH-001-02, Rev 5r, Appendix C.26 (Continued)

detonation loading will be limited to B31.3 allowable stress (if a catalog support) or the AISC allowable stress (if a structural shape), for occasional loads.

Stresses in pipe supports outside BC/HTR areas under combined weight, thermal expansion, and detonation loading will be limited to 1.6 times the B31.3 or AISC normal condition allowable stress. The basis for the 1.6 is AISC N690, Table Q1.5.7.1 for extreme and higher loading.

In-line instrumentation, such as pressure transducers, will be shown to be acceptable up to DDT loading by limiting the maximum pressure to the maximum rated pressure of the instrumentation pressure boundary. Since these items are replaceable, i.e., there are none in Black Cells, their possible failure to function after a PRC-DDT is acceptable.

Components such as jumper connectors, valves, jet pump pairs, etc., whose function cannot be demonstrated by analysis alone may be qualified by a combination of analysis and test as follows:

1. Analyses per the criteria above as applicable for the component boundary.

2. Demonstrate other significant design aspects such as leak tightness of jumper connectors or valve operability, closure function and stem leakage by performing a bounding impulsive load test. Provide test acceptance criteria similar to those that would be used for the same functions in a seismic test.

Justification: ASME B31.3 does not address detonation pressure loading, but does permit the designer to perform detailed analysis for unusual situations, as indicated in Paragraphs 300(c)(3) and 304.7.2. The purpose of the criteria described above is to implement that provision.

Exception to B31.3 Paragraph 302.2.4

Piping subjected to HPAV events, as defined in Appendix A, Section 5.4, and designed to withstand those events without controls will be leak tested at a pressure equal to the system design pressure (from the Mechanical line list) multiplied by the applicable factors in Section 345 of ASME B31.3-1996, *Process Piping*. The HPAV pressure will be permitted to exceed the test pressure, which is an exception to Paragraph 302.2.4.

Justification: ASME B31.3 does not address highly impulsive pressure loading, and does permit the designer to perform detailed analysis for unusual situations, as indicated in Paragraph 304.7.2 for Unlisted Components. The design rules developed in Report 24590-WTP-RPT-ENG-07-011, Revision 2, ensure that the piping system will maintain pressure boundary under all conditions.

Appendix I

Deleted