1245257

[00692634]

OFFICE OF RIVER PROTECTION
P.O. Box 450, MSIN H6-60
Richland, Washington 99352

JUL 1 1 2017

17-ECD-0048

Ms. Alexandra K. Smith, Program Manager
Nuclear Waste Program
Washington State
Department of Ecology
3100 Port of Benton Blvd.
Richland, Washington 99354

RECEIVED
JUL 1 3 2017
EDMC

Ms. Smith:

SUBMITTAL OF THE PROPOSED CLASS 3 MODIFICATION OF THE HANFORD FACILITY RESOURCE CONSERVATION AND RECOVERY ACT PERMIT FOR THE TREATMENT, STORAGE, AND DISPOSAL OF DANGEROUS WASTE PERMIT APPLICATION FOR THE LOW-ACTIVITY WASTE PRETREATMENT SYSTEM

This letter transmits the Dangerous Waste Permit application for the Low-Activity Waste Pretreatment System (LAWPS). The U.S. Department of Energy appreciates the work of your staff over the last 18 months addressing questions and reviewing draft application material. This permit application was prepared as an integrated tank treatment and storage unit under WAC 173-303-640.

This transmittal includes:

- Technical Fact Sheet for the Proposed Class 3 Permit Modification of the Hanford Facility Resource Conservation and Recovery Act Permit for the Treatment, Storage, and Disposal of Dangerous Waste, Part III, Operating Unit Group 1, LAWPS (Attachment 1).
- Permittee and Co-Permittee certifications (Attachment 2) required under WAC 173-303-810(12) to support submittal of the Class 3 permit modification.
- Notice of Intent on the Siting, Construction & Operation of the LAWPS at the Hanford Site Public Meeting Summary (Attachment 3).
- Class 3 Permit Modification Notification Form, Part III, Operating Unit 1, LAWPS. (Attachment 4).

The public comment period for this permit modification is scheduled to begin on July 17, 2017, to September 15, 2017.

If you have any questions, please contact Chris Kemp, Director, and Environmental Compliance Division, (509) 373-0649, or Jessica Joyner, Washington River Protection Solutions LLC, Environmental Compliance, (509) 376-7533.

Kevin W. Smith
Manager

ECD:MEB

Attachments: (4)

cc w/attachs:
J. Cantu, Ecology
A.S. Carlson, Ecology
S.L. Dahl-Crumpler, Ecology
Gonzaga University, Foley Center Library **(DVD)**
HF Operating Record (J.K. Perry, MSA, A3-01) **(DVD)**
Portland State University, Govt. Information **(DVD)**
University of Washington, Suzzallo Library, Govt. Publications Department **(DVD)**
U.S. Department of Energy, Public Reading Room, Washington State University, Tri-Cities, Consolidated Information Ctr., **(DVD)**
Administrative Record (TS-2-8)
Environmental Portal, LMSI
WRPS Correspondence

cc w/o attachs:
R.S. Skeen, CTUIR
M.E. Jones, Ecology
J. Richardson, Ecology
G.P. Bohnee, NPT
K. Niles, Oregon Energy
A.C. McKarns, RL
R. Buck, Wanapum
T.G. Beam, WRPS
L.E. Borneman, WRPS
C.A. Burke, WRPS
R.D. Cantwell, WRPS
J.A. Joyner, WRPS
C.P. Strand, WRPS
R. Jim, YN
D. Rowland, YN

Attachment 1
17-ECD-0048
(3 Pages Excluding Cover Sheet)

Technical Fact Sheet for the Proposed Class 3 Permit Modification of the Hanford Facility RCRA Permit for the Treatment, Storage, and Disposal of Dangerous Waste, Part III, Operating Unit Group 1, Low-Activity Waste Pretreatment System

Proposed Class 3 Permit Modification of the Hanford Facility RCRA Permit for the Treatment, Storage and Disposal of Dangerous Waste, Part III, Operating Unit Group 1, Low Activity Waste Pretreatment System.

July 2017 US Department of Energy – Office of River Protection

Background

The Hanford Site is located in southeastern Washington State along the Columbia River. The 580 square-mile site was created in 1943 as part of the Manhattan Project to produce plutonium for the nation's defense program. Hanford's legacy defense waste is stored in 177 underground tanks containing approximately 56 million gallons of radioactive and chemically contaminated dangerous waste managed as high-level radioactive and dangerous waste. Most of the tanks are beyond their engineered design life, and some have leaked in the past.

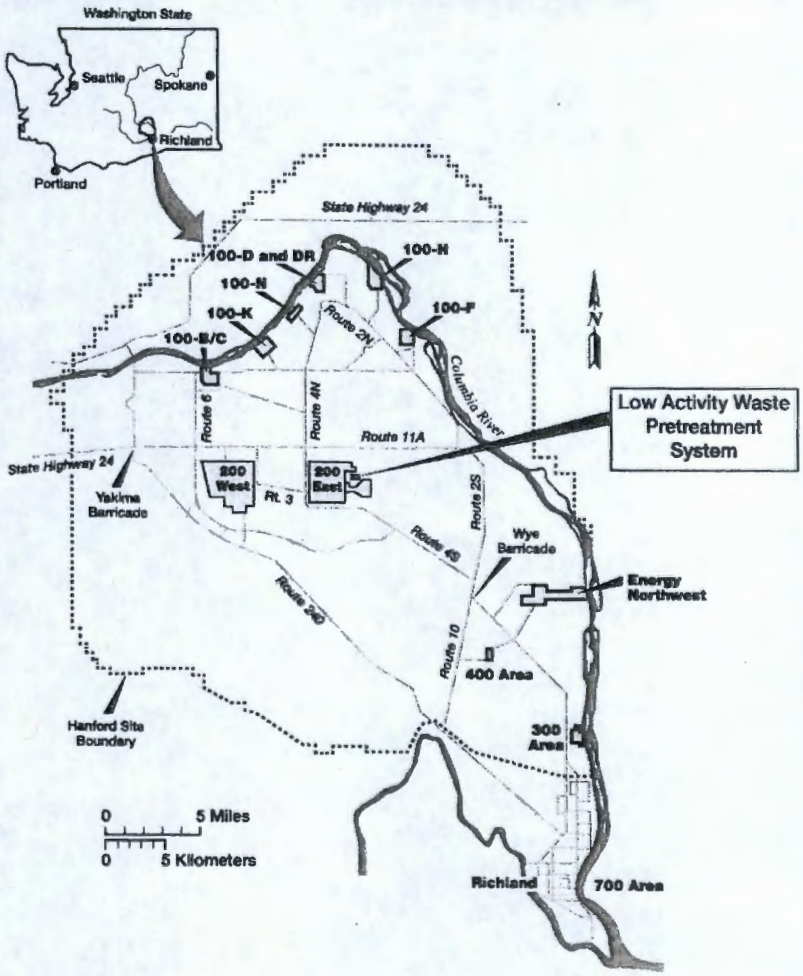

Direct Feed Low-Activity Waste (DFLAW)

To begin treating tank waste, DOE-ORP developed a plan to begin feeding low-activity tank waste directly to the Waste Treatment and Immobilization Plant (WTP) Low-Activity Waste (LAW) Facility, allowing the treatment of Hanford tank waste to begin as early as 2022. This is called the DFLAW process.

One of the advantages of DFLAW is that it allows the DOE-ORP to begin treating a significant portion of the tank waste supernate (liquid portion of the waste) using the WTP facilities closest to completion while technical issues at the WTP Pretreatment and High-Level Waste facilities are resolved.

Most of the WTP facilities required to process waste in the DFLAW configuration are complete or nearly complete. However, execution of the DFLAW mission requires ORP to construct the Low Activity Waste Pretreatment System (LAWPS) Facility. The WTP facilities required to support DFLAW have separate public comment periods and are not part of this modification.

Low Activity Waste Pretreatment System

The location of the LAWPS Facility will be in the 200 East Area of the Hanford Site, Benton County, Washington. DOE-ORP will be constructing the LAWPS Facility in close proximity to WTP to perform a similar functions as portions of the the WTP Pretreatment Facility. The LAWPS Facility will provide pretreated waste feed to the WTP LAW Facility prior to the remainder of the WTP treatment facilities coming online. Treatment will consist of solids filtration and radioactive cesium removal by ion exchange.

Permit Modification Scope

The Permittees are requesting a Class 3 modification to the Hanford Facility RCRA Permit to add the LAWPS Facility as a new Operating Unit Group (OUG-1) in Part III of the Permit. This modification is seeking approval from the Washington State Department of Ecology (Ecology) to allow construction and operation of the LAWPS Facility needed to support the DFLAW configuration for treatment of Hanford tank waste.

The LAWPS Part B Permit Application, DOE/ORP-2016-01, Revision 0, serves as the Class 3 modification to the Hanford Facility RCRA Permit in accordance with WAC 173-303-830(4)(c)(i) through (v), and contains the information requirements outlined in WAC 173-303-806. Primary elements of the application include the following:

- Seismic and traffic evaluations (Main body of application)
- Part A Form (Appendix 1, Addendum A)
- Waste Analysis Plan (Appendix 1, Addendum B)
- Process Information (Appendix 1, Addendum C)
- Security Requirements (Appendix 1, Addendum E)
- Preparedness and Prevention (Appendix 1, Addendum F)
- Personnel Training (Appendix 1, Addendum G)
- Closure Plan (Appendix 1, Addendum H)
- Inspection Plan (Appendix 1, Addendum I)
- Contingency Plan (Appendix 1, Addendum J)
- Engineering design media, including specifications, calculations, reports, and drawings (Appendix 2)

An Independent Qualified Registered Professional Engineering (IQRPE) design assessment report is under development to provide an independent technical evaluation of the LAWPS tank system design, including corrosion control measures associated with the underground transfer pipelines. The completed report will be submitted to Ecology at a later date.

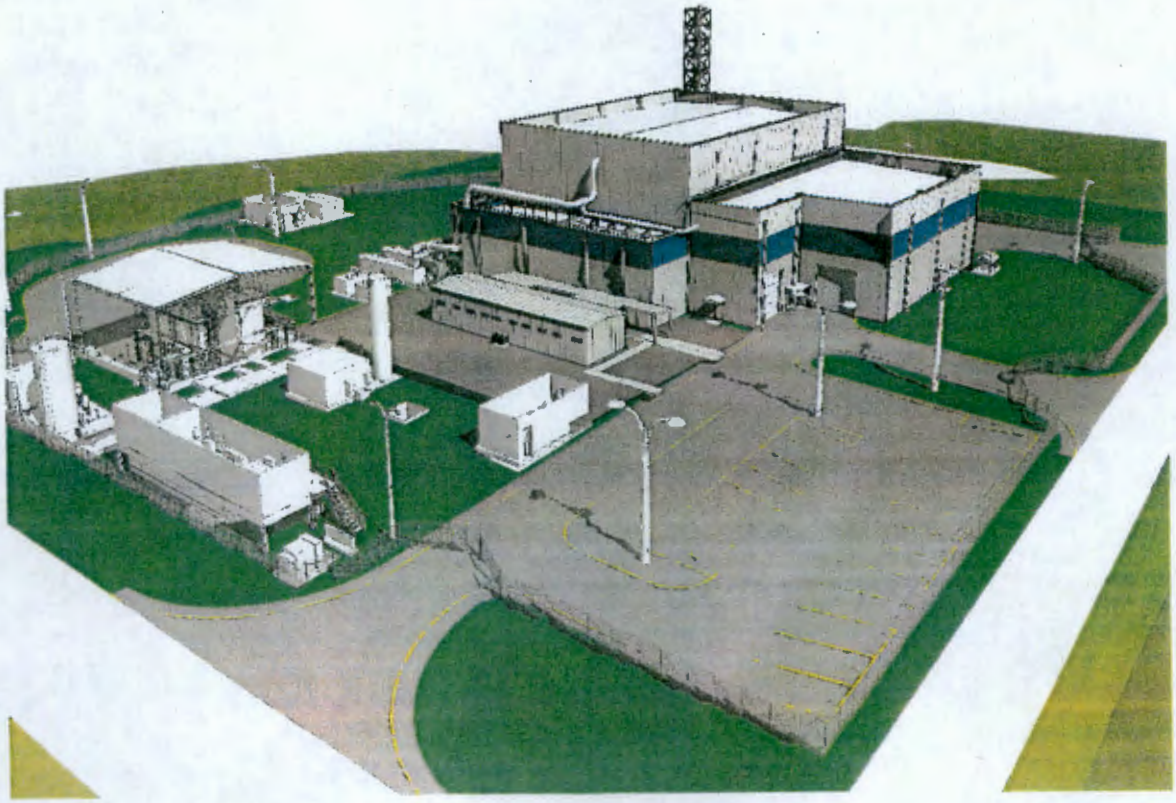

Public Review Process

A 60-day public comment period is scheduled for **July 17 through September 15, 2017**. A public meeting is scheduled for **August 21, 2017 at 5:30 PM** at the Richland Public Library (955 Northgate Drive). At the conclusion of the comment period, Ecology will address public comments and, in accordance with WAC 173-303-830(4)(c)(vi), make the decision to either approve or deny the requested modifications into the Hanford Facility RCRA Permit following the procedures of WAC 173-303-840. This will include additional public comment opportunities, as appropriate. If the modification is approved, any necessary changes to the Hanford Facility RCRA Permit will be finalized, and the new LAWPS portion will be issued by Ecology.

Whom to Contact

Written comments on the proposed Class 3 Permit modification need to be submitted to Ecology by **September 15, 2017**. Comments may be submitted via Ecology's online eComment form (preferred) at the following web address: http://wt.ecology.commentinput.com/?id=5M3Zb

or by U. S. mail or hand-delivery to:

Washington State Department of Ecology
Attn: Mandy Jones, LAWPS Permitting Lead
3100 Port of Benton Boulevard
Richland, WA 99354
mjon461@ecy.wa.gov

Hard copies of the Class 3 modification are available for review at the information repositories listed below, or may be viewed online at http://pdw.hanford.gov/arpir/. For additional information on the permit modification, contact Dieter Bohrmann, ORP, at Dieter_G_Bohrmann@orp.doe.gov.

Hanford Public Information Repositories				
Portland State University Government Information Branford Price Millar Library 1875 SW Park Ave Portland, OR 97207-1151 Attn: Claudia Weston (503) 725-4542 Email: westonc@pdx.edu	**University of Washington** Suzzallo Library Government Publications Department Box 352900 Seattle, WA 98195-2900 Attn: Emily Keller (206) 685-3130 Email: cass@uw.edu; reinerth@uw.edu	**U.S. Department of Energy** **Public Reading Room** Washington State University Tri-Cities Consolidated Information Center Rm 101-L 2770 Crimson Way Richland, WA 99352 Attn: Janice Parthree (509) 372-7443 Email: doe.reading.room@pnnl.gov	**Gonzaga University** Foley Center Library 502 E. Boone Ave Spokane, WA 99258 Attn: John Spencer (509) 313-6110 Email: spencer@gonzaga.edu	**Ecology Nuclear Waste Program Resource Center** 3100 Port of Benton Blvd Richland, WA 93354 Attn: Teresa Booth (509) 372-7950 Email: Hanford@ecy.wa.gov
Administrative Record and Public Information Repository **Address:** 2440 Stevens Center Pl, Rm 1101, Richland, WA 99352 **Attn:** Heather Childers **Phone:** (509) 376-2530 **Email:** heather_m_childers@rl.gov **Website:** www2.hanford.gov/arpir/				

***The Permittees' compliance history during the life of the Hanford Facility RCRA Permit being modified is available from the Washington State Department of Ecology. Contact Mandy Jones at* (509) 372-7916.**

Attachment 2
17-ECD-0048
(2 Pages Excluding Cover Sheet)

U.S. Department of Energy, Office of River Protection and Washington River Protection Solutions LLC Certifications

U.S. Department of Energy, Office of River Protection Certification

The following certification statement is provided for the submittal of the Hanford Facility Resource Conservation and Recovery Act Permit Modification Notification C3-LAWPS-2017-01.

I certify under penalty of law that this document and all attachments were prepared under my direction or supervision in accordance with a system designed to assure that qualified personnel properly gather and evaluate the information submitted. Based on my inquiry of the person or persons who manage the system, or those persons directly responsible for gathering the information, the information submitted is, to the best of my knowledge and belief, true, accurate, and complete. I am aware that there are significant penalties for submitting false information, including the possibility of fine and imprisonment for knowing violations.

Kevin W. Smith, Manager
U.S. Department of Energy,
Office of River Protection

7/11/17
Date

Washington River Protection Solutions LLC Certification

The following certification statement is provided for the submittal of the Hanford Facility Resource Conservation and Recovery Act Permit Modification Notification C3-LAWPS-2017-01.

I certify under penalty of law that this document and all attachments were prepared under my direction or supervision in accordance with a system designed to assure that qualified personnel properly gather and evaluate the information submitted. Based on my inquiry of the person or persons who manage the system, or those persons directly responsible for gathering the information, the information submitted is, to the best of my knowledge and belief, true, accurate, and complete. I am aware that there are significant penalties for submitting false information, including the possibility of fine and imprisonment for knowing violations.

6/12/17

M. A. Lindholm
President and Project Manager
Washington River Protection Solutions LLC

Date

Attachment 3
17-ECD-0048
(23 Pages Excluding Cover Sheet)

Notice of Intent on the Siting, Construction & Operation of the Low-Activity Waste Pretreatment System at the Hanford Site Public Meeting Summary

Public Meeting Summary

Notice of Intent on the Siting, Construction & Operation of the Low-Activity Waste Pretreatment System at the Hanford Site

Date: Monday, November 14, 2016
Location: Richland Public Library
Time: 5:30-7:00 p.m.

A total of 26 individuals attended the public meeting and signed in. The attendance sheet is attached to this meeting summary.

Dieter Bohrmann, Public Affairs, Department of Energy, Office of River Protection (DOE-ORP), opened the meeting by welcoming attendees, describing the purpose of the meeting and outlining the planned agenda. A copy of the meeting agenda is attached to this meeting summary. Also attached is a copy of a LAWPS fact sheet made available at the meeting.

Sahid Smith, Technical Lead, DOE-ORP, presented an overview of the Low-Activity Waste Pretreatment System (LAWPS) project describing the new facility, why it is being built, where it will be located, and how it fits into the overall Hanford Site cleanup plans. A copy of Mr. Smith's presentation is attached to this meeting summary.

Mandy Jones, Permitting Lead, Ecology Nuclear Waste Program, presented an overview of Ecology's anticipated permitting process for the LAWPS facility and what opportunities there will be for public comment during the process. A copy of Ms. Jones' presentation is attached to this meeting summary.

During each presentation, and during a separate question/answer period following the conclusion of the presentations, attendees had the opportunity to ask questions regarding the LAWPS project and other Hanford issues of concern. No comments were made indicating a dissatisfaction with the way the notice of intent process was handled for LAWPS, or the approach that was taken to satisfy the citizen's proponent negotiation component of the facility siting process. Following is a summary of the questions asked, issues raised and general comments made by attendees:

- An issue was raised regarding whether risk assessments principles and cost/benefit analyses were being used to guide decisions to proceed with vitrification vs. use of other types of solidification technologies such as grout. It was questioned whether there are lower cost methods of treating the LAW; thus, freeing up resources to be used elsewhere.
- Clarification was requested and provided regarding how the cesium removed by the planned ion exchange process in LAWPS will be managed and where it will be stored. It was clarified that the Cs will be returned to the DST system and will not be stored in dry

storage, like the planned approach for Cs/Sr capsules from WESF, since there is not a storage facility capability of handling it at this time.

- In response to questions from attendees, clarification was provided regarding the configuration of the LAWPS facility. Specifically, the use of underground vaults for the process equipment, the presence of a weather enclosure and a bridge crane, the raising of the lag storage area for access safety and that lessons learned from WTP pretreatment facility construction were looked at and considered when designing LAWPS.
- Questions were asked regarding the "waste incidental to reprocessing (WIR)" process and how the tank waste is re-classified as LAW from high level waste once it is processed through the LAWPS facility. Clarification of the WIR process and schedule was provided and attendees were referred to DOE Order 435.1 for additional information.
- Additional discussion focused on the long-lived isotopes that are expected to be present in the immobilized LAW (i.e., "glass logs") and the planned disposal of this waste stream in the Integrated Disposal Facility (IDF). The potential permitting impacts for IDF were described, including that the IDF permit will need to be revised to reflect the waste streams planned to be disposed there.
- As part of discussion on the various underground waste transfer lines, additional clarification and description of the planned operation of the WTP Effluent Management Facility (EMF) was provided. In addition, it was noted that operational responsibility for the transfer lines will need to be clarified as part of Ecology's permitting process for the individual facilities.
- In response to a question from attendees, it was clarified that it is not "illegal" to feed waste out of AP-107 to LAWPS and then refill that DST tank with additional tank waste to feed as part of the next campaign. This is similar to the approach used for feeding the 242-A evaporator facility from a single DST tank. It was also noted that Ecology will ensure that the facility permit applications and issued permits will include sufficient information to comply with the applicable regulations.
- It was clarified that training employees to operate LAWPS will not begin until the facility has been constructed.
- It was clarified that design and construction of LAWPS is considered critical path for implementation of the DFLAW strategy/program.

Public Meeting: Notice of Intent on the Siting, Construction & Operation of the Low-Activity Waste Pretreatment System at the Hanford Site

November 14, 2016 | Richland, Washington

Sign-In Sheet

	NAME (Please Print)	Would you like to be added to the Hanford email list to receive information about this facility and other Hanford-related activities? Yes (please include email)	No
1.	Martin Bensky	already on	
2.	Jim Dukelow		✓
3.	MARK McKENNA		✓
4.	Tom Beam	already on	
5.	Shintaro Ito		✓
6.	Ross Potter	already on	
7.	Dieter Bohrmann		✓
8.	Jean Vanni		
9.	John Richardson		
10.	Jutch D Cannell		✓
11.	Phil Rogers	pmrogers1k@gmail.com	
12.	Russ Brown		
13.	Mary Burandt		
14.	Roger Landon		
15.	PADRAIC FOX	PADRAIC.FOX@DOE.GOV	
16.	Todd Nelson		
17.	Dan Bears		
18.	Annette Cary		

Public Meeting: Notice of Intent on the Siting, Construction & Operation of the Low-Activity Waste Pretreatment System at the Hanford Site

November 14, 2016 | Richland, Washington

Sign-In Sheet

	NAME (Please Print)	Would you like to be added to the Hanford email list to receive information about this facility and other Hanford-related activities? Yes (please include email)	No
19.	David Herman		
20.	Jason Young		
21.	WILTON Guerra	wilton83@gmail.com	Yes
22.	Charles K. MacLeod		
23.	Del Ballard	Delballard@gmail.com	No
24.	Pietro Martinelli		No
25.	CRAIG LIEN		NO
26.	Randy Bradbury		
27.			
28.			
29.			
30.			
31.			
32.			
33.			
34.			
35.			
36.			

OFFICE OF RIVER PROTECTION
United States Department of Energy

DEPARTMENT OF ECOLOGY
State of Washington

Hanford Public Meeting: Siting, Construction & Operation of the Low-Activity Waste Pretreatment System

DATE:	Monday, November 14, 2016
LOCATION:	Richland Public Library
TIME:	5:30-7:00 p.m.

Agenda

5:30 p.m.	Welcome and Overview	Dieter Bohrmann
5:35 – 6:00 p.m.	DOE-Office of River Protection - Overview of Low Activity Waste Pretreatment System	Sahid Smith
6:00 – 6:30 p.m.	Washington Department of Ecology - Overview of Ecology's role in permitting/regulating new facility	Mandy Jones
6:30 – 7:00 p.m.	Question and answer session	
7 p.m.	Adjourn	

NOTICE OF INTENT

Siting, Construction and Operation of the LAWPS Facility

PUBLIC MEETING

November 14th, 5:30 p.m.
Richland Public Library
955 Northgate Drive
Richland, Washington

- The U.S. Department of Energy, Office of River Protection is hosting a meeting to discuss plans for the siting, construction and operation of the Low-Activity Waste Pretreatment System (LAWPS) at Hanford.
- The purpose of this meeting is to explain the LAWPS facility and its role in treating Hanford Tank Waste. The Washington State Department of Ecology will also participate and explain its role and the process of issuing a dangerous waste permit for the new facility.
- LAWPS will be located in the 200 East Area of Hanford adjacent to the Waste Treatment and Immobilization Plant (WTP). The new facility will pretreat tank waste for vitrification as part of the Direct Feed Low-Activity Waste Program.
- Agency representatives will be available to address questions at the meeting. However, no formal comments will be taken at this time. The public will have an opportunity to provide formal comments during the permit modification process, which will include an additional public meeting. For questions, email hanford@ecy.wa.gov.

OFFICE OF RIVER PROTECTION
U.S. Department of Energy

What is the Low-Activity Waste Pretreatment System?

The Department of Energy's (DOE) path forward to treat most of the tank waste is through vitrification at the Waste Treatment and Immobilization Plant. WTP technical issues have significantly slowed completion of design and construction of the Pretreatment Facility and High-Level Waste (HLW) Vitrification Facility.

The Department has proposed to feed low-activity waste directly to the LAW Facility in order to facilitate the earliest treatment of low activity waste. LAWPS was identified as a needed component of the Direct Feed LAW (DFLAW) option. To provide the pretreatment function for DFLAW, ORP has designed the Low-Activity Waste Pretreatment System facility. LAWPS will remove suspended solids and cesium from double shell tank liquids to provide the LAW feed to the WTP LAW facility.

LAWPS FACILITY FACTS

Design Life: 40 Years
Total site footprint: 4 acres
Facility footprint: 20,000 square feet
Main process tanks
- Filter feed tank - 6,100 gallons
- Treated waste transfer tank - 2,300 gallons
- Cesium product tank - 35,000 gallons
- Lag storage tanks (3) - 124,000 gallons each

Waste transfer piping (permanent underground pipe-in-pipe design)
- Between AP Tank Farm and LAWPS
  Three 2-inch-diameter lines - 2,110 feet long
- Between LAWPS and WTP interface point
  One 3-inch line - 1,300 feet long
- Between WTP interface point and AP Tank Farm
  One 2-inch line - 2,400 feet long

ION EXCHANGE

SOLIDS REMOVED THROUGH FILTRATION AND CESIUM REMOVED THROUGH ION EXCHANGE

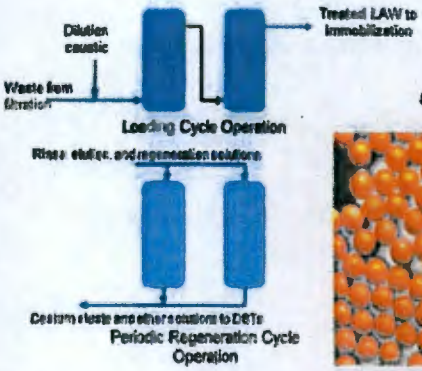

sRF Resin

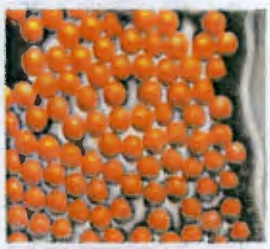

OFFICE OF
RIVER PROTECTION
United States Department of Energy

Hanford Low Activity Waste Pretreatment System

RCRA Notice of Intent Public Meeting

Presented by: Sahid Smith, Tank Farms Program, LAWPS Project

November 14, 2016

Overview/Purpose

Overview

- The U.S. Department of Energy (DOE) is planning to design and build a Low-Activity Waste Pretreatment System (LAWPS) to remove radioactive cesium and solids from some Hanford tank waste. The facility is needed to support a DOE initiative to begin vitrifying low-activity waste as early as 2022.
- LAWPS will require a permit from the state of Washington before construction activities can begin. The facility will be permitted as a dangerous waste management unit subject to state regulations (WAC 173-303).
- In April 2016, DOE submitted a "Notice of Intent" to apply for a permit with the Washington Department of Ecology.

Purpose of tonight's meeting

- Before submitting the permit application to Ecology, DOE is required to provide notification to the state, local communities, and the public that the siting of a dangerous waste management facility is being considered.
- This meeting is designed to provide information and answer questions about the LAWPS facility.

Baseline treatment approach

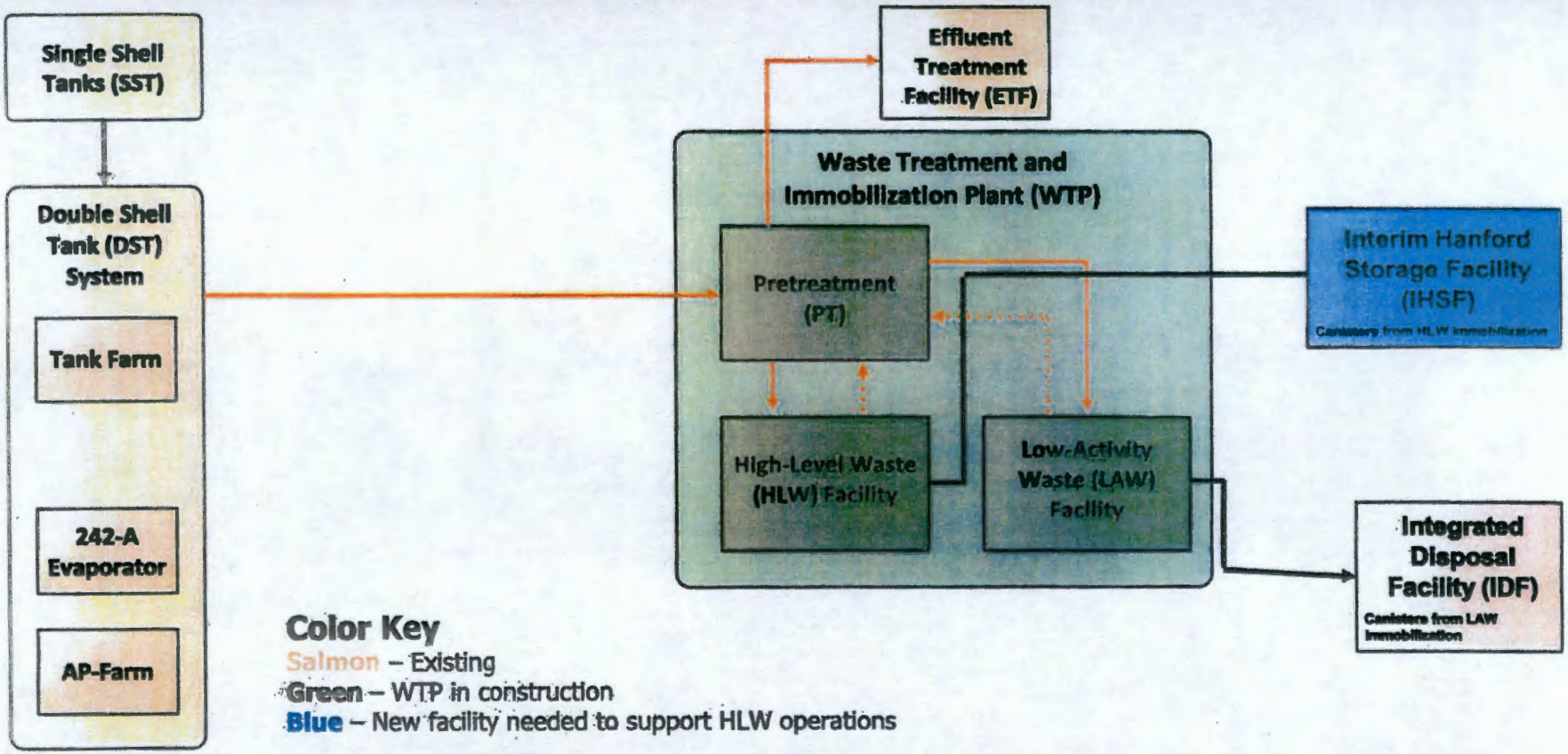

Color Key
Salmon – Existing
Green – WTP in construction
Blue – New facility needed to support HLW operations

Original waste treatment approach sent all tank waste through the WTP Pretreatment Facility first, producing feed for high-level and low-activity waste facilities.

Direct-Feed Low Activity Waste Treatment Approach

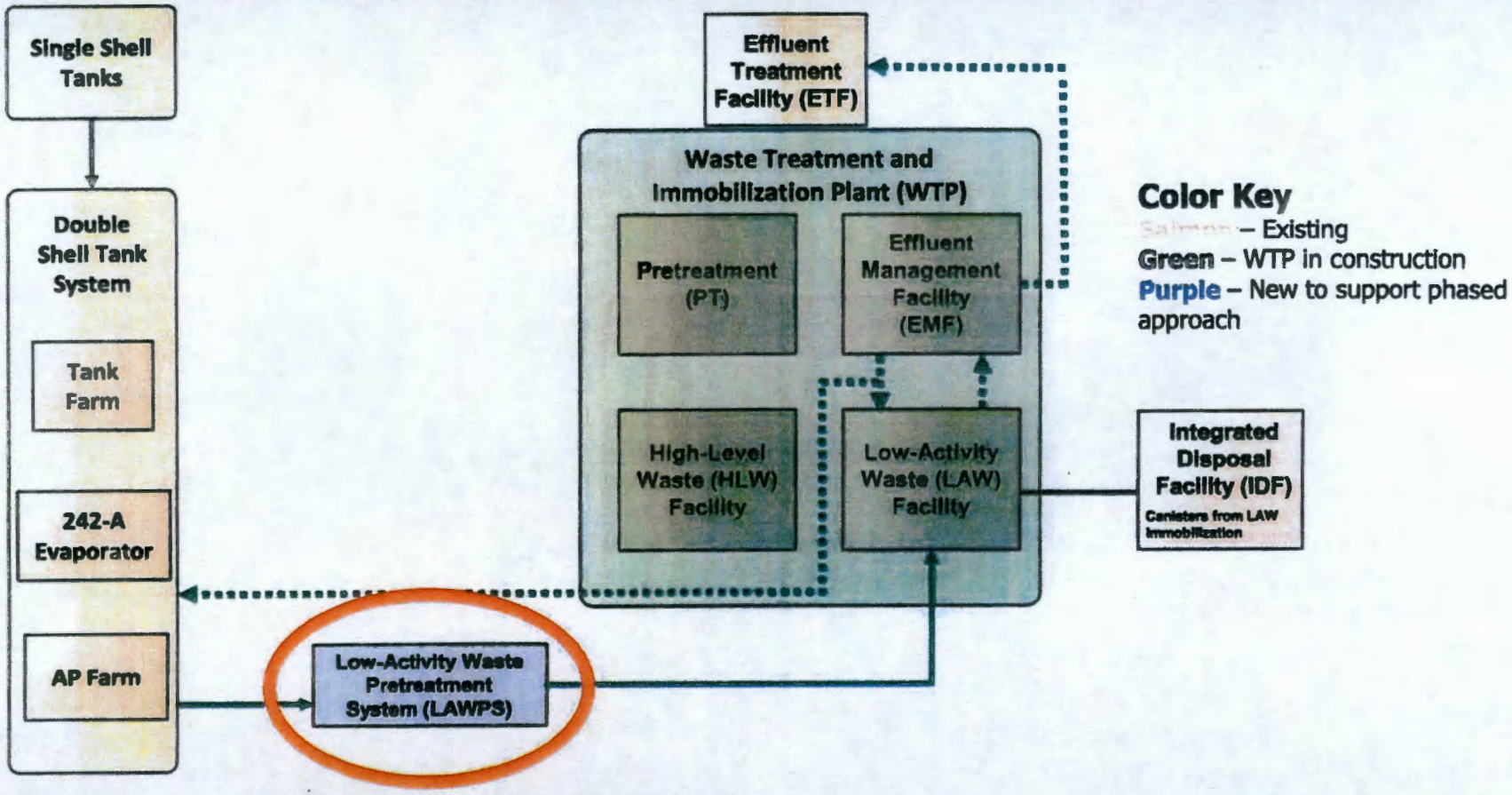

The DFLAW approach sends pretreated tank liquids directly to the Low-Activity Waste (LAW) Facility, enabling treatment operations as early as 2022.

The LAWPS facility is needed to support this approach.

LAWPS Facility Concept

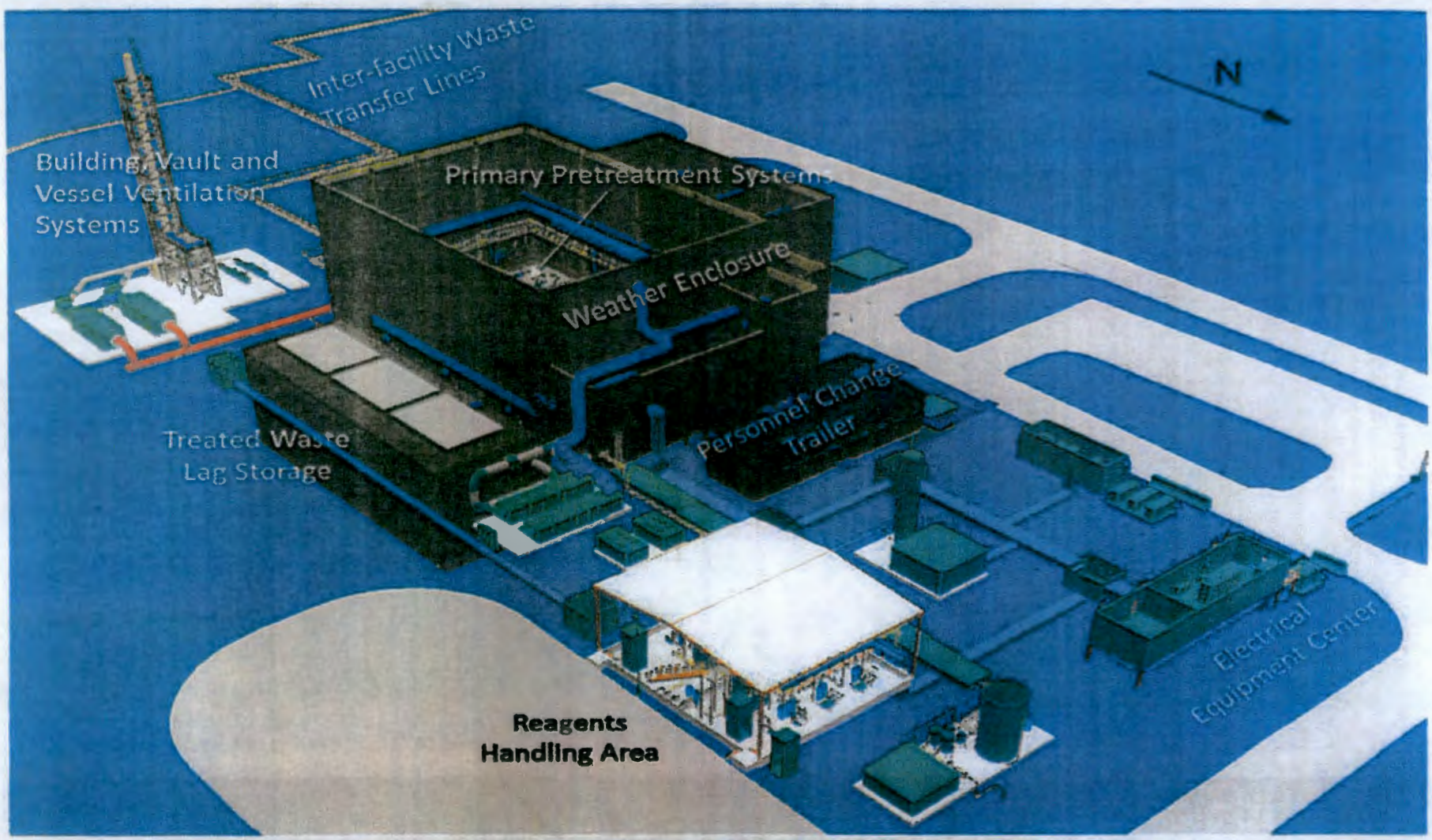

OFFICE OF RIVER PROTECTION
United States Department of Energy

LAWPS/Transfer Line Locations

OFFICE OF RIVER PROTECTION
United States Department of Energy

DFLAW Facility Overview

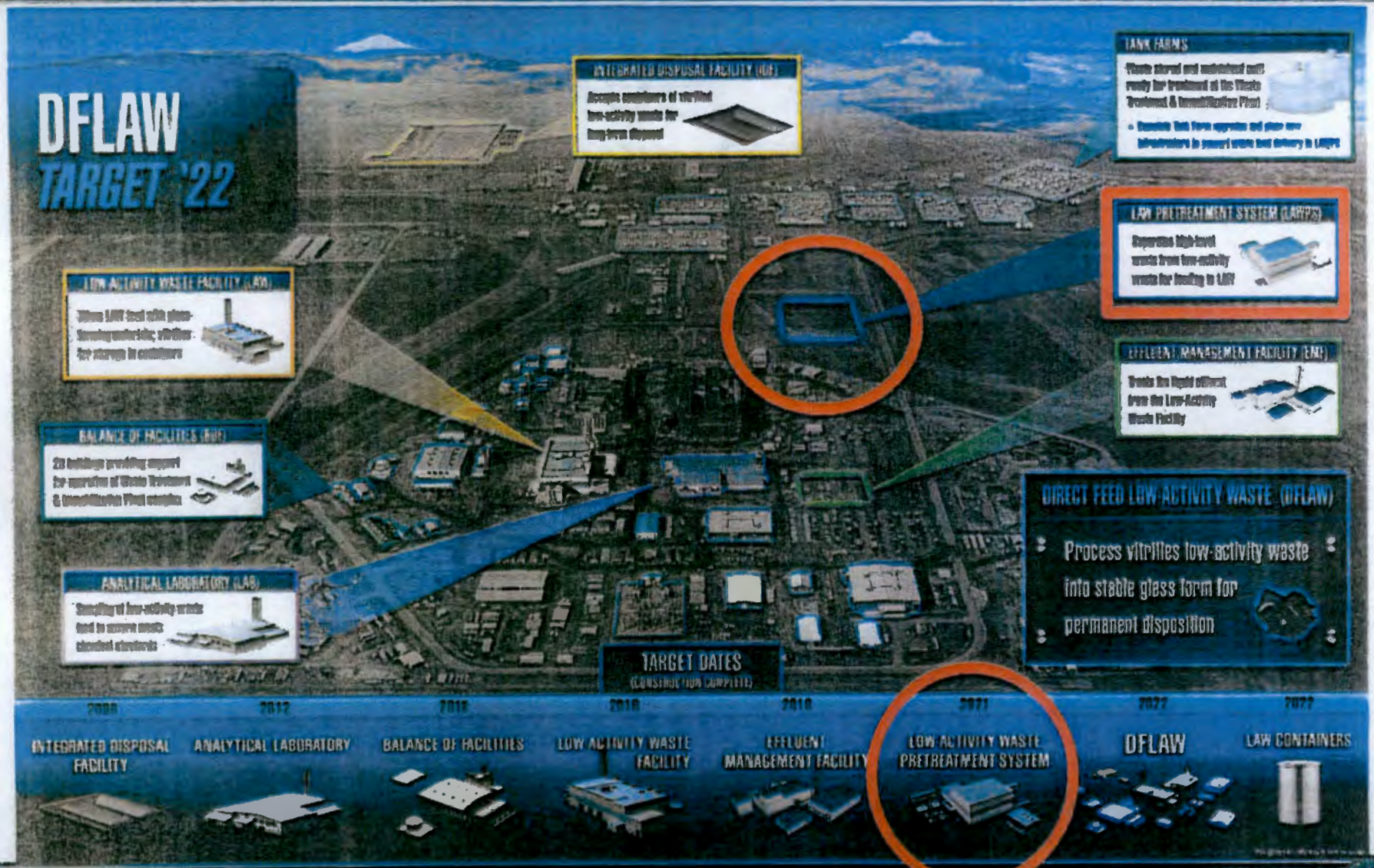

DFLAW Program Expected Results

20 Proposed waste feed delivery campaigns

6.3 Million gallons of tank space generated*

1,000,000 Gallons per campaign

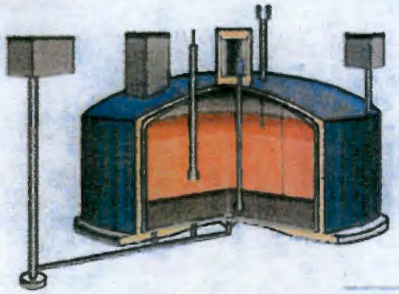

9,600 Metric tons of sodium processed

15% of Tank Farm sodium inventory

12,000 Immobilized LAW containers produced

LAWPS Project Planning Schedule

- **May 2015:** Initiated Preliminary Design phase
- **June/July 2017:** Planned submittal of permit applications
- **August 2018:** Complete final design activities
- **Late 2018:** Construction targeted to begin
- **Late 2020:** Target date for construction complete
- **Late 2021/Early 2022:** Target date for initial startup and ops

DFLAW Integrated Delivery Team

The Office of River Protection
- Mission integration and accomplishment
- Delivering the DFLAW program

WRPS, tank operations contractor
- Tank farm operations
- LAWPS
- Waste feed delivery
- Effluent retention and treatment

BNI, WTP contractor
- Design, construction, startup and commissioning
  - LAW vitrification facility
  - WTP Analytical Laboratory
  - WTP Balance of Facilities

National laboratories
- Technical expertise
- Process improvements and issue resolution

WAI, 222-S laboratory contractor
- Analytical services in support of DFLAW

Richland Operations Office
- Hanford Site cleanup
- Waste disposition

MSA, Hanford sitewide services contractor
- Infrastructure and utilities services

CHPRC, environmental cleanup contractor
- ILAW container disposal services
- IDF operations

One System integrating the Direct Feed Low-Activity Waste (DFLAW) program

Questions?

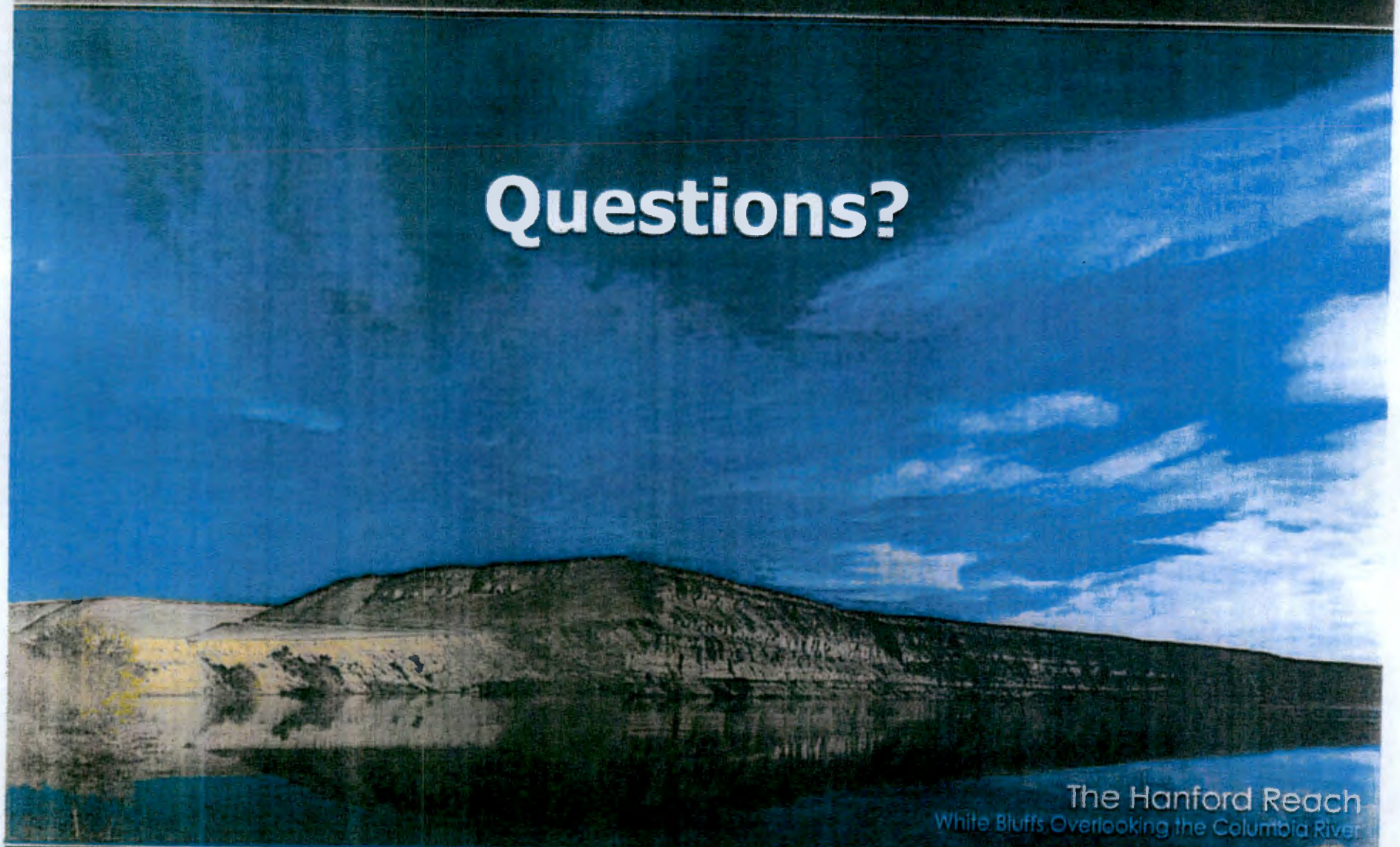

The Hanford Reach
White Bluffs Overlooking the Columbia River

Public Involvement at Hanford

Mandy Jones
Permitting Lead, Nuclear Waste Program

DEPARTMENT OF
ECOLOGY
State of Washington

Low Activity Waste Pretreatment System (LAWPS)

PURPOSE

- Regulatory Requirements
- Inform the Public
- Solicit Questions

Permitting Requirements

- Notice of Intent (WAC 173-303-281)
  - New Facility (WAC 173-303-800 through 805)
  - Must meet Siting and Performance Standards (WAC 173-303-282 and 283)
- DOE anticipates submitting the permit application for the LAWPS Facility to Ecology in June/July 2017 timeframe
- Class 3 permit change will require the following:
  - Minimum 60-day public comment period on the permit application, including a public meeting (led by DOE)
  - Minimum 45-day public comment period on the permitting decision (led by Ecology)
- Public will be informed of upcoming comment periods through the Hanford email and postal lists; newspaper ads; websites; social media; Hanford Advisory Board; and more

Public Comment

- Public Involvement is essential to the process.

Attachment 4
17-ECD-0048
(1464 Pages Excluding Cover Sheet)

Class 3 Permit Modification Notification Form, Part III,
Operating Unit 1, Low-Activity Waste Pretreatment System

Hanford Facility RCRA Permit Modification Notification Forms

Part III, Operating Unit 1

Low Activity Waste Pretreatment System

Index

Hanford Facility Dangerous Waste Part B Permit Application, Low Activity Waste Pretreatment System, DOE/ORP-2016-01, Revision 0.

Submitted by Co-Operator:

Scott Sax — Date: 6/7/17

Reviewed by DOE Program Office:

Steve Pfaff — Date: 6/29/2017

Hanford Facility RCRA Permit Modification Form

Unit:	Permit Part
Low Activity Waste Pretreatment System	***Part III, Operating Unit Group 1***

Description of Modification:
The modification consists of a Part B permit application for new Operating Unit Group 1, Low Activity Waste Pretreatment System.

List of Addenda and Supporting Design Media Specific to Operating Unit Group 1 as follows:

CHAPTERS SPECIFIC TO OPERATING UNIT GROUP 1:

APPENDIX 1 Addenda

Addendum A Part A Form

Addendum B Waste Analysis Plan

Addendum C Process Information

Addendum E Security Requirements

Addendum F Preparedness and Prevention

Addendum G Personnel Training

Addendum H Closure Plan

Addendum I Inspection Plan

Addendum J Contingency Plan

APPENDIX 2 Design Media

Calculations

Specifications

Reports

Engineering Drawings.

Note: Addendum D, Ground Water Monitoring and Addendum K, Post-Closure are not applicable to the Low Activity Waste Pretreatment System.

WAC 173-303-830 Modification Class	Class 1	Class 1	Class 2	Class 3
Please mark the Modification Class:				X

Enter relevant WAC 173-303-830, Appendix I Modification citation number: -830(4)(d), Other Modifications

Per WAC 173-303-830(4)(d), the Permittee requests that this modification be reviewed and approved as a Class 3

Modification Approved: ☐ Yes ☐ No (*state reason for denial*)	Reviewed by Ecology:
Reason for denial:	S. L. Dahl-Crumpler Date

DOE/ORP-2016-01
Revision 0

Hanford Facility Dangerous Waste Part B Permit Application, Low Activity Waste Pretreatment System

Prepared for the U.S. Department of Energy
Assistant Secretary for Environmental Management

Office of River Protection

P.O. Box 450
Richland, Washington 99352

Approved for Public Release;
Further Dissemination Unlimited

This page intentionally left blank

Approved for Public Release;
Further Dissemination Unlimited

DOE/ORP-2016-01
Revision 0

Hanford Facility Dangerous Waste Part B Permit Application, Low Activity Waste Pretreatment System.

T. Beam/C. Strand
Washington River Protection Solutions, LLC.

Date Published
June 2017

Prepared for the U.S. Department of Energy
Assistant Secretary for Environmental Management

Office of River Protection

P.O. Box 450
Richland, Washington 99352

APPROVED
By Janis Aardal at 12:22 pm, Jun 21, 2017

Release Approval Date

RECEIVED
JUL 13 2017
EDMC

Approved for Public Release;
Further Dissemination Unlimited

TRADEMARK DISCLAIMER

Reference herein to any specific commercial product, process, or service by tradename, trademark, manufacturer, or otherwise, does not necessarily constitute or imply its endorsement, recommendation, or favoring by the United States Government or any agency thereof or its contractors or subcontractors.

This report has been reproduced from the best available copy.

Printed in the United States of America

RECEIVED
JUL 13 2017
EDMC

DOE/ORP-2016-01, Revision 0

Hanford Facility Dangerous Waste Part B Permit Application, Low Activity Waste Pretreatment System

U.S. Department of Energy

Approved for Public Release;
Further Dissemination Unlimited

This page intentionally left blank

Approved for Public Release;
Further Dissemination Unlimited

TABLE OF CONTENTS

1.0 INTRODUCTION 1
2.0 STATE ENVIRONMENTAL POLICY ACT 1
3.0 WASTE MINIMIZATION 1
4.0 REPORTS AND RECORDS 2
5.0 SEISMIC RISK CONSIDERATION 2
5.1 Introduction 2
5.2 Seismic Design Category (SDC) 3
5.3 DOE-STD-1020-2012 Seismic Design Requirements 3
5.4 International Building Code Design Requirements 4
5.5 Seismic Analysis and Design Summary 4
6.0 TRAFFIC PATTERN 6
6.1 Introduction 6
6.2 Hanford Site Information 6
6.3 LAWPS Site Information 6
6.4 Post Construction LAWPS Traffic Evaluation 7
7.0 GROUND WATER MONITORING 9
8.0 POST-CLOSURE 9
9.0 REFERENCES 10

LIST OF FIGURES

Figure 5-1. Seismic Design Response Spectra 5
Figure 6-1. Low Activity Waste Pretreatment System and the Hanford Site 8
Figure 6-2. Low Activity Waste Pretreatment System Site Plan 9

LIST OF TABLES

Table 5-1. Unmitigated Consequence of SSC Failure per Seismic Design Category 3
Table 5-2. Limit State Application for SDCs 4
Table 5-3. SDC Difference Summary 5

LIST OF APPENDICES

APPENDIX 1 – PERMIT ADDENDA

ADDENDUM A – PART A FORM

ADDENDUM B – WASTE ANALYSIS PLAN

ADDENDUM C – PROCESS INFORMATION

ADDENDUM E – SECURITY REQUIREMENTS

ADDENDUM F – PREPAREDNESS AND PREVENTION

ADDENDUM G – PERSONNEL TRAINING

ADDENDUM H – CLOSURE PLAN

ADDENDUM I – INSPECTION PLAN

ADDENDUM J – CONTINGENCY PLAN

APPENDIX 2 – DESIGN MEDIA

TABLE 1 – SPECIFICATIONS, DESIGN CALCULATIONS, AND REPORTS

TABLE 2 – DRAWINGS

ACRONYMS AND ABBREVIATIONS

ANS	American Nuclear Society
ASCE	American Society of Civil Engineers
CFF	Cross-Flow Filtration
Cs	Cesium
DBE	Design Basis Event
DOE-ORP	United States Department of Energy, Office of River Protection
DST	Double-Shell Tank
IBC	International Building Code
IX	Ion Exchange
LAW	Low Activity Waste
LAWPS	Low Activity Waste Pretreatment System
NPH	Natural Phenomena Hazards
PSHA	Probabilistic Seismic Hazard Assessment
RCRA	Resource Conservation and Recovery Act of 1976
SDC	Seismic Design Category
SEPA	State Environmental Policy Act
SSC	Structures, Systems and Components
TC&WM EIS	Tank Closure and Waste Management Environmental Impact Statement
TOC	Tank Operations Contractor
USGS	U.S. Geological Survey
WAC	Washington Administrative Code
WTP	Waste Treatment and Immobilization Plant

This page intentionally left blank

1.0 INTRODUCTION

The Low-Activity Waste Pretreatment System (LAWPS) facility will be located in the 200 East Area of the Hanford Site, Benton County, Washington. A small-scale map depicting the Hanford Site and the location of the LAWPS is provided as Figure 6-1.

The U.S. Department of Energy, Office of River Protection (DOE-ORP) will be constructing the LAWPS facility in close proximity to the Waste Treatment and Immobilization Plant (WTP) to perform a similar function to the WTP Pretreatment (PT) facility for the low-activity portion of Hanford tank waste. The LAWPS facility will provide waste feed to the WTP Low Activity Waste facility prior to the remainder of the WTP treatment facilities coming online.

The LAWPS will provide treatment and storage of the supernate portion of Double Shell Tank (DST) System waste that will be transferred to the WTP LAW facility for vitrification. The LAWPS facility will employ a cross-flow filtration (CFF) system to separate the solids from the liquid phase and an ion exchange (IX) system to remove soluble radioactive cesium (Cs) from the filtered liquid. Once Cs has been removed, the resulting liquid waste stream will be stored in lag tanks located within the LAWPS Facility. At the lag storage tanks, conformance with process acceptance criteria will be confirmed prior to the liquid feed being transferred to the WTP LAW Facility for vitrification. Waste will be transferred to LAWPS via in-ground, double-walled, waste transfer lines from the 241-AP Tank Farm. Both the solids removed by the CFF system and the Cs removed by the IX system are accumulated for transfer back to the DST system. The primary process areas of the facility are located below grade. An estimated one million gallons of waste feed will be processed by the LAWPS Facility annually.

The following information contained in this document represents an application for Class 3 modification to the Hanford Facility *Resource Conservation and Recovery Act of 1976* dangerous waste permit in accordance with Washington Administrative Code (WAC) 173-303-803 and WAC 173-303-830.

2.0 STATE ENVIRONMENTAL POLICY ACT

Section E.1.3.3.2 of the *Final Tank Closure and Waste Management Environmental Impact Statement* (TC&WM EIS) (DOE/EIS-0391, December 2012) discusses the Low Activity Waste Pretreatment System (LAWPS) Facility. In the document, the LAWPS Facility was called the Interim Pretreatment System. Ecology was a cooperating agency on the TC&WM EIS for the purposes of ensuring that State Environmental Policy Act (SEPA) requirements were met.

3.0 WASTE MINIMIZATION

To fulfill the requirements of 40 CFR 264.73(b)(9), a certification form that the LAWPS has a waste minimization/pollution prevention program in place will be entered annually into the LAWPS operating record.

4.0 REPORTS AND RECORDS

Reporting and record keeping applicable to the Hanford Facility are described in the Hanford Facility Permit General Information Portion, DOE/RL-91-28 (as amended). Not all of the requirements and associated reports and records identified in DOE/RL-91-28 are applicable to the LAWPS. Those reports and record requirements applicable to LAWPS are identified as follows:

- LAWPS Contingency Plan incident reports:
  - Immediate reporting
  - Written reporting
  - Shipping paper discrepancy reports.
- Unit group specific Part B Permit Application documentation and associated plans
- Personnel training records
- Inspection records
- Transportation documentation
- Land disposal restriction records
- Waste Minimization and Pollution Prevention certification.

In addition, the following reports prepared for the Hanford Facility will contain input, when applicable, from LAWPS:

- Quarterly Hanford Facility Resource Conservation and Recovery Act (RCRA) Permit modification report
- Anticipated non-compliance
- Hanford Facility annual reports.

The LAWPS Operating Record is kept as part of the Hanford Facility Operating Record.

5.0 SEISMIC RISK CONSIDERATION

5.1 INTRODUCTION

LAWPS is a Hazard Category 2 facility requiring design in compliance with natural phenomena hazards (NPH) criteria per DOE-STD-1020-2012. This DOE standard requires application of seismic analysis and structural design per the assigned natural phenomena hazard design criteria (NDC). This section discusses the mitigation of the earthquake hazard as demonstrated by the application of the seismic design category (SDC). In addition to adherence to DOE-STD-1020,

the design also satisfies requirements of the 2012 International Building Code which is adopted as part of the defined code of record for the LAWPS project.

5.2 SEISMIC DESIGN CATEGORY (SDC)

The Hazard Category 2 LAWPS Facility and associated Structures, Systems and Components (SSCs) are assigned an SDC based on the unmitigated consequence of failure. American Nuclear Society (ANS) 2.26 provides direction for assigning the appropriate SDC to the LAWPS SSCs. Table 5.1 below indicates the consequence for each SDC.

Table 5-1. Unmitigated Consequence of SSC Failure per Seismic Design Category

SDC	Worker	Public	Environment
SDC-1	No radiological/toxicological release consequences but failure of SSCs may place facility workers at risk	No radiological/ toxicological release consequences	No radiological/ toxicological release consequences
SDC-2	Radiological toxicological exposures to workers will have no permanent health effects, may place more facility workers at risk of physical injury, or may place emergency facility operations at risk.	Radiological toxicological exposures of public areas are small enough to require no public warnings concerning health effects.	No radiological or chemical environmental consequences.
SDC-3	Radiological toxicological exposures that may place facility workers' long-term health in question.	Radiological toxicological exposures of public areas would not be expected to cause health consequences but may require emergency plans to assure public protection.	No long-term environmental consequences are expected, but environmental monitoring may be required for a period of time.

5.3 DOE-STD-1020-2012 SEISMIC DESIGN REQUIREMENTS

The assigned SDC is used to determine the path forward for seismic analysis and design. DOE-STD-1020-2012 requires application of American Society of Civil Engineers (ASCE) 7-10 for seismic analysis of SDC-1 and SDC-2 SSCs. In addition to minimum requirements specified by ASCE 7, DOE-STD-1020-2012 incorporates application of performance criteria defined as Limited States. The limit states vary in definition depending on the SSC being analyzed/designed. Limit states are provided as examples in Appendix B of ANS 2.26. The application of limit states on SDCs are shown in Table 5.2 below, as copied from DOE-STD-1020-2012 Table 3-1. SDC-3 SSCs require seismic requirements beyond the International Building Code (IBC) based (ASCE 7) codes. SDC-3 requires development of a Probabilistic Seismic Hazard Assessment (PSHA). A 1996 PSHA is used as the basis for the design basis earthquake (DBE) response spectra developed in 2005 for the PC-3 facilities located at the adjacent WTP Facility. This spectra is applied to the SDC-3 SSCs of LAWPS. Plots containing the SDC-3 horizontal and vertical design response spectra are shown in Figure 5-1. SDC-3 SSCs are required to follow criterion in ASCE-4-98 and ASCE 43-05. Limit States are applied in ASCE 43-05.

Table 5-2. Limit State Application for SDCs

SDC	Limit State			
	A	B	C	D
SDC-1	ASCE/SEI 7-10, Use Risk Category II, I = 1.0 R a =R[1]	ASCE/SEI 7-10, Use Risk Category II, I = 1.0 R a = R/1.25 R ≥ 1.2	ASCE/SEI 7-10, Use Risk Category II, I = 1.0 R a = R/1.5 R a ≥ 1.2	ASCE/SEI 7-10, Use Risk Category II, I = 1.0 R a ≥ 1.0
SDC-2	N/A	ASCE/SEI 7-10, Use Risk Category IV, I = 1.5 R a = R	ASCE/SEI 7-10, Use Risk Category IV, I = 1.5 R a = R/1.2 R a ≥ 1.2	ASCE/SEI 7-10, Use Risk Category IV, I = 1.5 R a ≥ 1.0

Table notes:

[1] R = Response Modification Coefficient given in ASCE/SEI 7-10. Ra = Actual (reduced) Response Modification Coefficient to be used in the design substituting R values given in ASCE/SEI 7-10 to account for the difference between the limit states achieved by ASCE/SEI 7-10 and the LS A, B, C, and D, as defined in ANSI/ANS-2.26-2004 and ASCE/SEI 43-05. ASCE/SEI 43-05, in Table C1-1, recognizes that Seismic Use Group (SG) I, SG II, and SG III of ASCE/SEI 7-02 (i.e., Risk Categories II, III, and IV, respectively, in ASCE/SEI 7-10) are equivalent to SDC-1 LS-A; SDC-1 LS-B; and SDC-2 LS-B, respectively. Also, it recognizes that SG III of ASCE/SEI 7-02 (i.e., Risk Category IV in ASCE 7-2010) is equivalent to SDC-1 LS-C. Thus, the ratio between LS A and B and between B and C are approximately 1.25 and 1.2, respectively. The Ra values given above are based on these ratios.

SDC-1 Limit State A and SDC-2 Limit State B are equivalent to IBC based Risk Category II and Risk Category IV structures, respectively.

5.4 INTERNATIONAL BUILDING CODE DESIGN REQUIREMENTS

The IBC adopts ASCE 7 as the standard for performing seismic analysis and direction for applicable design codes (i.e., ACI concrete and AISC steel design). IBC / ASCE 7-10 seismic design is based off mapped spectral values that are based on U.S. Geological Survey (USGS) data. The Tank Operations Contractor (TOC) has adopted the higher site specific spectral parameters. The SDC-1 and SDC-2 structures are analyzed to meet or exceed minimum criteria contained in ASCE 7-10 and therefore meet IBC requirements. Target performance decrease in annual probability of exceeding acceptable behavior limits as the SDC increases from 1 to 5. SDC-3 seismic accelerations are greater than SDC-2 based on longer return periods associated with the development of spectra with the PSHA as a basis.

5.5 SEISMIC ANALYSIS AND DESIGN SUMMARY

Table 5.3 summarizes the differences between the SDCs applied to the various SSCs of the LAWPS facility.

Table 5-3. SDC Difference Summary

Seismic Analysis/Design Component	Seismic Design Category		
	SDC-3	SDC-2	SDC-1
Design Basis Earthquake Ground Motion	Site Specific PSHA required WTP Horizontal and Vertical 2005 DRS	Horizontal: SD1 = 0.192 and SDS = 0.588 Vertical: SD1 = 0.098 and SDS = 0.346 Seismic Design Category D	Horizontal: SD1 = 0.192 and SDS = 0.588 Vertical: SD1 = 0.098 and SDS = 0.346 Seismic Design Category D
Response Modification Coefficient	not used	Response Modification Coefficient reduced per Limit State in DOE-STD-1020 Table 3-1	Response Modification Coefficient reduced per Limit State in DOE-STD-1020 Table 3-1
Importance Factor	not used	I = 1.5	I = 1.0
Soil Structure Interaction	Required	Not Required	Not Required
Dynamic Analysis	Required – Performed as part of Soil Structure Interaction	Not required per ASCE 7-10 Table 12.6-1, with acceptable irregularities Equivalent Lateral Force Procedure is permitted	Not required per ASCE 7-10 Table 12.6-1, with acceptable irregularities Equivalent Lateral Force Procedure is permitted

Figure 5-1. Seismic Design Response Spectra

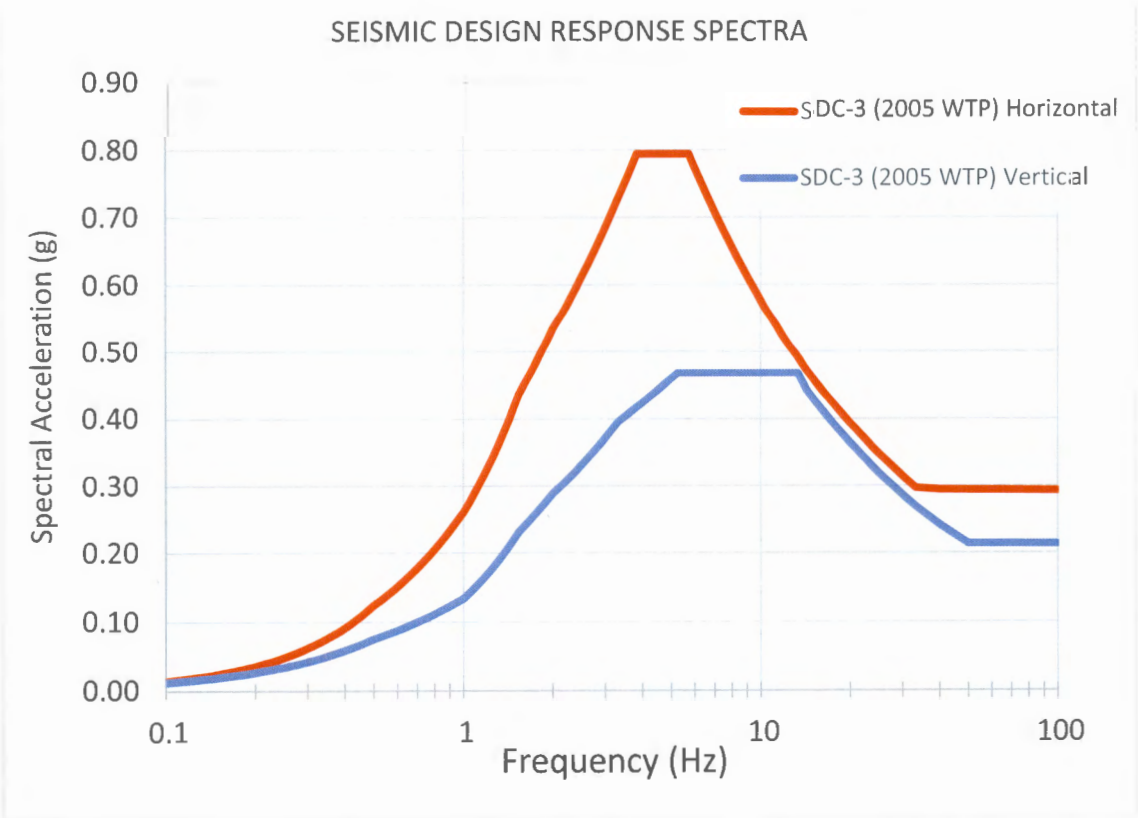

6.0 TRAFFIC PATTERN

6.1 INTRODUCTION

The following information is provided in accordance with Washington Administrative Code 173-303-806(4)(a)(x), *Traffic Pattern.*

The LAWPS will be located in the 200 East Area of the Hanford Site, Benton County, Washington. A small-scale map depicting the Hanford Site and the location of the LAWPS is provided as Figure 6-1. A site plan depicting the layout of LAWPS is included as Figure 6-2.

The DOE-ORP will be constructing the LAWPS facility in close proximity to the WTP to perform a similar function to the WTP Pretreatment Facility. Though on a much smaller scale, the LAWPS facility will provide waste feed to the WTP LAW facility prior to the remainder of the WTP treatment facilities coming online. The LAWPS will provide treatment and storage of Double-Shell Tank supernate waste that will be transferred to the WTP LAW facility for vitrification.

6.2 HANFORD SITE INFORMATION

A regional public highway network traverses the Hanford Site (Washington State Highways 24 and 240). U.S. Department of Energy owned roadways allow unrestricted access (Route 10, and portions of Route 4S located south of the Wye Barricade) to certain portions of the Hanford Site. Restricted roadways exist in the central plateau where LAWPS will operate. Restricted roadways only allow access to authorized personnel.

The LAWPS will be located in the 200 East Area with all–weather access provided by existing roadways. Roads are constructed of bituminous asphalt (usually 5-centimeters thick, but the thickness of the asphalt layer will vary with each road). Paved parking will be available for personnel following construction.

Standard traffic control signs are used throughout the Hanford Site (e.g., octagonal stop signs, triangular yield signs). Speed limits are posted throughout the Hanford Site consistent with surroundings jurisdictions.

6.3 LAWPS SITE INFORMATION

The LAWPS facility will be located on the corner of WTP Loop Road and 4th Street as shown in Figure 6-2. The LAWPS site is approximately 2000 feet west of the WTP construction site and 1500 feet northeast of the 241-AP Tank Farm. Access to the WTP site can be made from two primary routes; from Route 4 South (from the Wye or Rattlesnake barricades), north on Canton Avenue and then east on 4th Street, and from Route 11A (from the Wye, Rattlesnake or Yakima barricades) south on Canton Avenue and then east on 4th Street.

Because the LAWPS will be operated largely by remote means, no permanent staffing will be located at the facility. Following construction, traffic to and from the LAWPS facility will be limited to the performance of periodic surveillances, preventative maintenance activities, and vendor deliveries of reagent chemicals used in process operations. Vendor deliveries are

anticipated to occur twice per week with maintenance and surveillance staff visiting the facility several times per week.

6.4 POST CONSTRUCTION LAWPS TRAFFIC EVALUATION

Given their close proximity, the projected traffic volumes for LAWPS facility operations were reviewed within the context of the *WTP Post Construction Traffic Analysis Final Project Report*, 245909-100-SC-W000-00003-04-01, Revision 00B, December 15, 2003. The WTP traffic analysis report evaluated the adequacy of Hanford Site transportation infrastructure for a post-construction WTP operations staff of an estimated 1,500 person staff assigned to four shifts. This was calculated to include up to 2,300 daily vehicle trips on the Hanford area roadways.

The report concluded that post-construction traffic volumes were over capacity of the existing roadways if the existing Hanford Site population and traffic remains constant. The report offered several means of mitigating capacity problems.

Given the total Hanford Site staffing level has fallen since the WTP traffic analysis report was issued in 2003, and the projected daily trips to the LAWPS facility represent a fraction of the analyzed WTP staffing levels, no adverse impacts to Hanford Site traffic capacity can be expected from LAWPS operations.

Figure 6-1. Low Activity Waste Pretreatment System and the Hanford Site

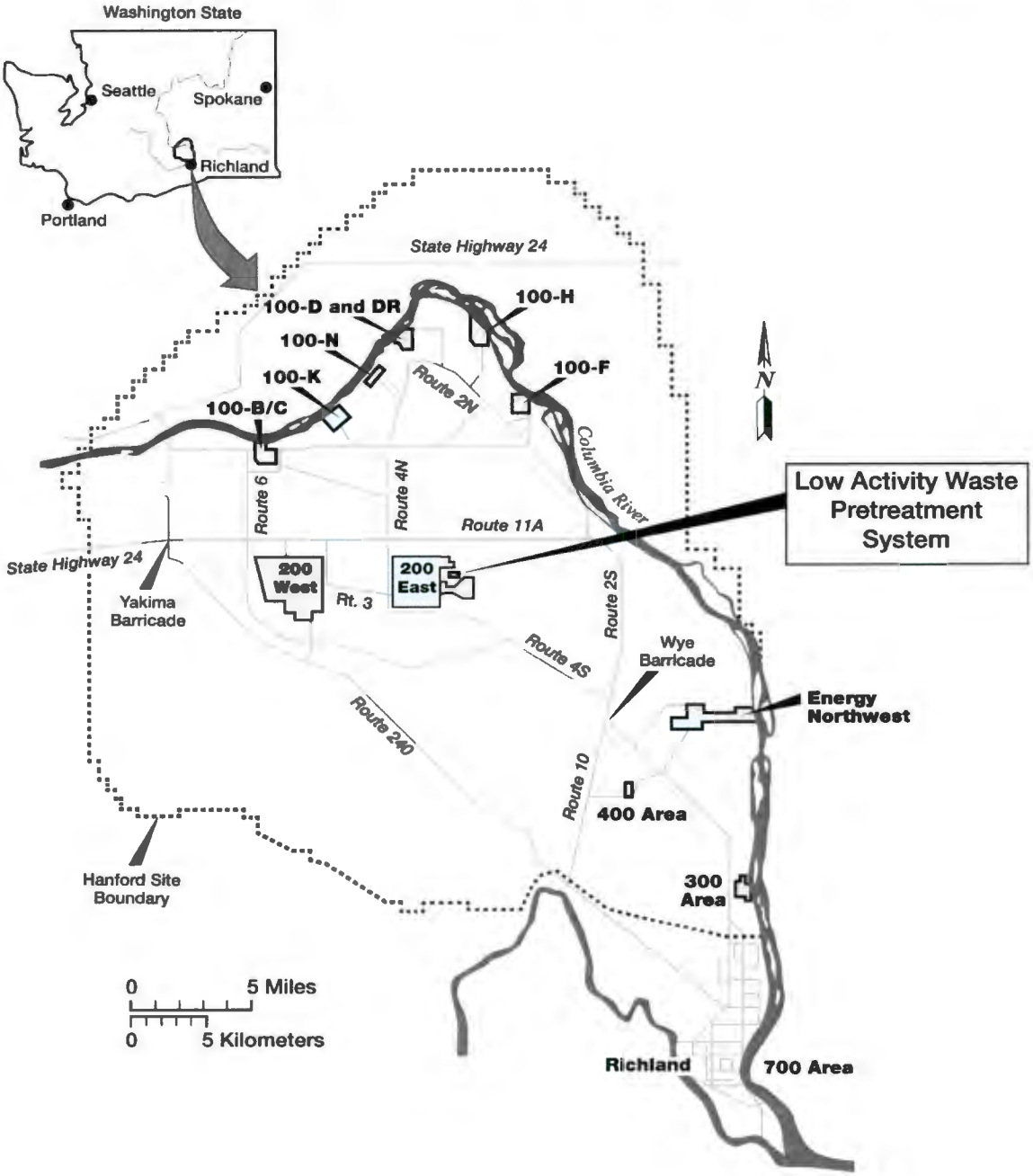

Figure 6-2. Low Activity Waste Pretreatment System Site Plan

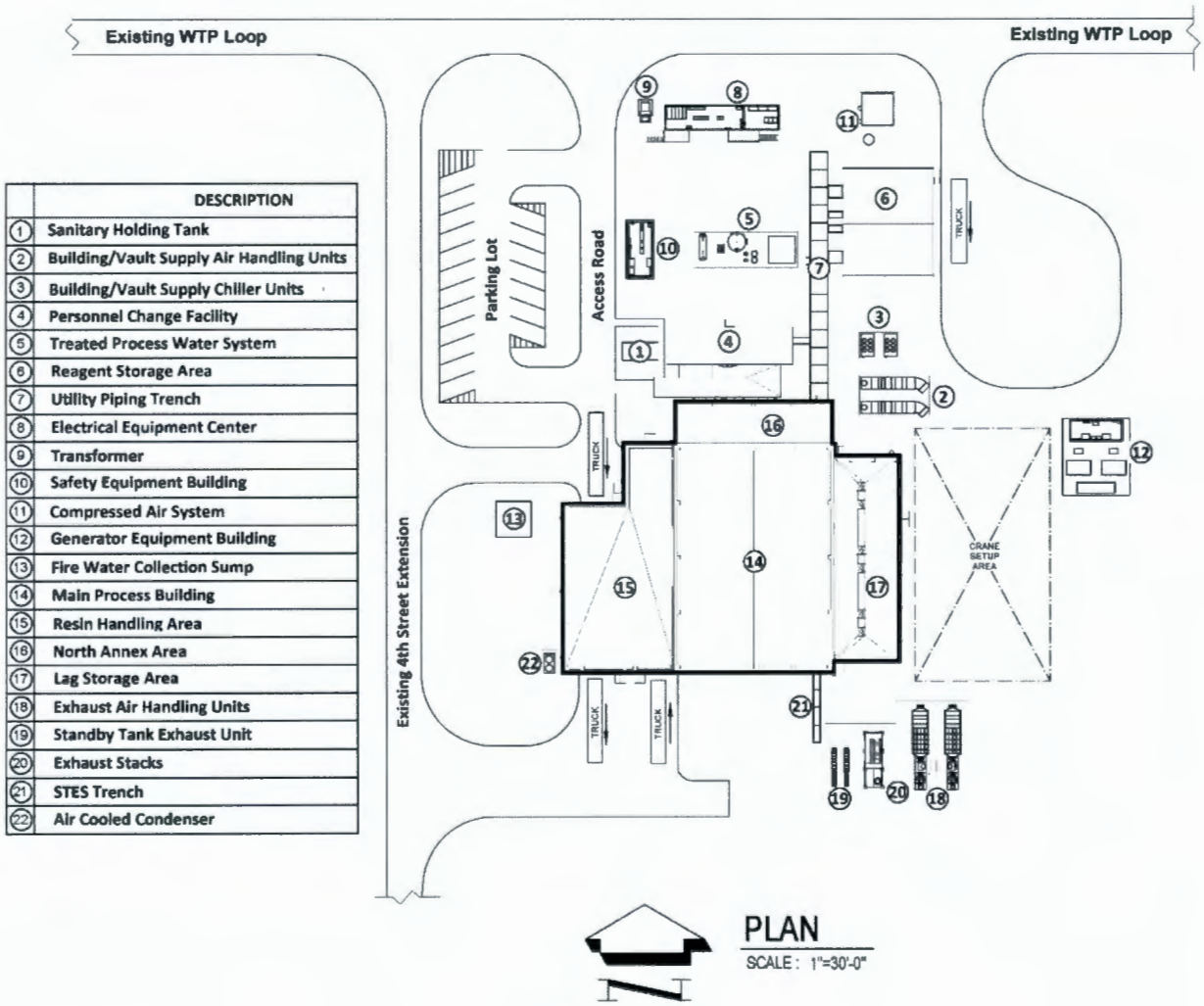

	DESCRIPTION
1	Sanitary Holding Tank
2	Building/Vault Supply Air Handling Units
3	Building/Vault Supply Chiller Units
4	Personnel Change Facility
5	Treated Process Water System
6	Reagent Storage Area
7	Utility Piping Trench
8	Electrical Equipment Center
9	Transformer
10	Safety Equipment Building
11	Compressed Air System
12	Generator Equipment Building
13	Fire Water Collection Sump
14	Main Process Building
15	Resin Handling Area
16	North Annex Area
17	Lag Storage Area
18	Exhaust Air Handling Units
19	Standby Tank Exhaust Unit
20	Exhaust Stacks
21	STES Trench
22	Air Cooled Condenser

7.0 GROUND WATER MONITORING

The Low-Activity Waste Pretreatment System is not a dangerous waste surface impoundment, waste pile, land treatment unit, or landfill. Therefore, ground water monitoring in accordance with WAC 173-303-645 is not required.

8.0 POST-CLOSURE

The post-closure requirements of Washington Administrative Code 173-303-610 are not applicable to the Low Activity Waste Pretreatment System.

9.0 REFERENCES

40 Code of Federal Regulations, 264.73, Operating Record.

DOE/RL-91-28, Hanford Facility Dangerous Waste Permit Application, General Information Portion, as amended.

DOE-STD-1020-2012 (December 2012), "Natural Phenomena Hazards Design and Evaluation Criteria for Department of Energy Facilities," U.S. Department of Energy, Washington D.C.

Resource Conservation and Recovery Act of 1976, as amended.

Section E.1.3.3.2 of the Final Tank Closure and Waste Management Environmental Impact Statement (TC&WM EIS) (DOE/EIS-0391, December 2012.

State Environmental Policy Act of 1971, as amended.

Washington Administrative Code 173-303, Dangerous Waste Regulations, as amended.

WTP Post Construction Traffic Analysis Final Project Report, 245909-100-SC-W000-00003-04-01, Revision 00B, December 15, 2003

APPENDICES

APPENDIX 1 – PERMIT ADDENDA

ADDENDUM A – PART A

ADDENDUM B – WASTE ANALYSIS PLAN

ADDENDUM C – PROCESS INFORMATION

ADDENDUM E – SECURITY REQUIREMENTS

ADDENDUM F – PREPAREDNESS AND PREVENTION

ADDENDUM G – PERSONNEL TRAINING

ADDENDUM H – CLOSURE PLAN

ADDENDUM I – INSPECTION PLAN

ADDENDUM J – CONTINGENCY PLAN

APPENDIX 2 – DESIGN MEDIA

TABLE 1 – SPECIFICATIONS, DESIGN CALCULATIONS, AND REPORTS

TABLE 2 – DRAWINGS

This page intentionally left blank.

ADDENDUM A
LOW ACTIVITY WASTE PRETREATMENT SYSTEM
PART A FORM

This page intentionally left blank.

WASHINGTON STATE DEPARTMENT OF ECOLOGY

Addendum A
Part A Form

Date Received	Reviewed by:	Date:
Month Day Year	Approved by:	Date:

I. This form is submitted to: (place an "X" in the appropriate box)

☒	Request modification to a final status permit (commonly called a "Part B" permit)	
☐	Request a change under interim status	
☐	Apply for a final status permit. This includes the application for the initial final status permit for a site or for a permit renewal (i.e., a new permit to replace an expiring permit).	
☐	Establish interim status because of the wastes newly regulated on:	(Date)
	List waste codes:	

II. EPA/State ID Number

W A 7 8 9 0 0 0 8 9 6 7

III. Name of Facility

U.S. Department of Energy – Hanford Facility

IV. Facility Location (Physical address not P.O. Box or Route Number)

A. Street

Refer to Permit Attachment 2, Hanford Facility Permit Legal Description

City or Town	State	ZIP Code
Near Richland	WA	

County Code	County Name
0 0 5	Benton

B. Land Type	C. Geographic Location Latitude (degrees, mins, secs)	Longitude (degrees, mins, secs)	D. Facility Existence Date Month Day Year
F	Refer to TOPO Map (Section XV)		1 1 1 9 1 9 8 0

V. Facility Mailing Address

Street or P.O. Box

P.O. Box 450

City or Town	State	ZIP Code
Richland	WA	99352

VI. Facility contact (Person to be contacted regarding waste activities at facility)		
Name (last)	**(first)**	
Smith	Kevin	
Job Title	**Phone Number (area code and number)**	
Manager	(509) 372-2315	
Contact Address		
Street or P.O. Box		
P.O. Box 450		
City or Town	**State**	**ZIP Code**
Richland	WA	99352

VII. Facility Operator Information	
A. Name	**Phone Number**
U.S. Department of Energy Owner/Operator Washington River Protection Solutions, LLC Co-Operator for Low-Activity Waste Pretreatment System	(509) 372-2315 (509) 376-3492
Street or P.O. Box	
P.O. Box 450 P.O. Box 850	
City or Town / **State**	**ZIP Code**
Richland / WA	99352
B. Operator Type	F
C. Does the name in VII.A reflect a proposed change in operator?	☐ Yes ☒ No
If yes, provide the scheduled date for the change:	**Month** / **Day** / **Year**
D. Is the name listed in VII.A. also the owner? If yes, skip to Section VIII.C.	☐ Yes ☒ No

VIII. Facility Owner Information	
A. Name	**Phone Number (area code and number)**
U.S. Department of Energy Owner/Operator	(509) 372-2315
Street or P.O. Box	
P.O. Box 450	
City or Town / **State**	**ZIP Code**
Richland / WA	99352
B. Operator Type	F
C. Does the name in VII.A reflect a proposed change in operator?	☐ Yes ☒ No
If yes, provide the scheduled date for the change:	**Month** / **Day** / **Year**

IX. NAICS Codes (5/6 digit codes)													
A. First							**B. Second**						
5	6	2	2	1	1	Waste Treatment & Disposal	5	6	2	9	1	0	Remediation Services
C. Third							**D. Fourth**						
5	4	1	7	1	2	Research & Development in the Physical, Engineering and Life Sciences	9	2	4	1	1	0	Administration of Air & Water Resource & Solid Waste Management Programs

X. Other Environmental Permits (see instructions)

A. Permit Type	B. Permit Number	C. Description
E	AOP00-05-006	Title V Air Operating Permit. Incorporation of current non-radiological Notice of Construction permits and FF-01 radiological licenses into the AOP may be delayed up to 2 years.
E	EF F—01	WAC 246-247, Hanford Site Radioactive Air Emission License
E	ST00045 11	WAC 173-216, State Waste Discharge Permit Program, Sitewide Permit for Miscellaneous Streams

XI. Nature of Business (provide a brief description that includes both dangerous waste and non-dangerous waste areas and activities)

Low Activity Waste Pretreatment System (LAWPS) is a tank treatment and storage unit that pretreats Double-Shell Tank (DST) waste supernatant for vitrification in the Waste Treatment and Immobilization Plant (WTP) low activity waste (LAW) facility (refer to figures A.1. and A.2). Tank waste supernatant is transferred from DST tank 241-AP-107 to the LAWPS Filter Feed Tank (FFT) where it is filtered through the Cross Flow Filtration (CFF) system. The filtered portion is next treated in two Ion Exchange (IX) columns in a lead and lag series to remove cesium. The treated low-activity waste is then transferred to one of three lag storage tanks by way of the Treated Waste Delay Tank (TWDT). The TWDT provides a temporary hold-up wherein the treated waste is monitored for high cesium prior to reaching the lag storage tanks. Treated waste transferred to the lag storage tanks is sampled for confirmation of proper treatment prior to transfer to the WTP LAW facility for vitrification.

LAWPS consists of three dangerous waste management units (DWMUs); one integrated tank treatment and storage unit (refer to Table A.1. for listing of primary components), and two container packaging and accumulation areas; the Staging, Maintenance, and Laydown Area, and the Spent Resin Handling Area.

DWMU #1 encompasses the LAWPS tank storage and treatment systems from feed, return, and transfer piping. This includes all individual tanks and ancillary components (e.g., piping, valves, containment systems, the cross-flow filters, ion exchange columns, and feed transfer lines to WTP LAW). Refer to Figures A.3., A.4., and A.5, for section views.

DWMU #2 encompasses the Staging, Maintenance, and Laydown area (refer to Figure A.6.) that is used for container storage of debris. Debris includes maintenance-generated items such as jumpers, pumps, valves, and other associated solid mixed waste.

DWMU #3 encompasses the Spent Resin Handling Area. The Spent Resin Handling Area (refer to Figure A.7) includes all equipment and components that are used to collect, dewater, and package spent ion exchange resin for treatment and disposal.

<u>S02 and T01, Tank Storage and Treatment</u>: The tank treatment and storage DWMU consists of transfer feed piping from the DST control point through the FFT, CFFs, IX columns, TWDT, lag storage tanks, and transfer piping to the WTP LAW control point. Treatment occurs in the CFF and IX columns, storage takes place in the balance of system tanks. Treatment is primarily accomplished by filtration to remove suspended solids and ion exchange to remove cesium to levels required by the WTP LAW facility acceptance criteria. Treatment can also include pH adjustment, as necessary, for WTP LAW facility acceptance criteria and/or for effluent returns back to DST. With the exception of feed and transfer lines, all tank treatment, and storage equipment are located below-grade within the main process building or within a covered below-grade vault (lag storage tanks). Refer to Table A.1 and Figures A.3 through A.5 for the primary tank treatment and storage DWMU components.

LAWPS will treat waste on a "campaign" basis from 20 selected feed tank vectors. The tank treatment process design capacity is derived from the feed campaign with the lowest sodium molarity, which drives the highest daily throughput to meet WTP LAW production goals. The maximum LAWPS tank treatment process design capacity is 9,500 gallons per day. The maximum tank storage process design capacity at any given time is nominally 415,610 gallons (refer to Table A.1), and represents a sum of all tank volumes. The estimated annual quantity of waste was derived from a projected annual LAWPS liquid waste throughput at 100% plant capacity (9500 gallons per day). This was converted to a mass using the density of water multiplied by the maximum allowable waste specific gravity of 1.35, which resulted in an estimated annual quantity of waste of 19,550 tons.

XI. Nature of Business (provide a brief description that includes both dangerous waste and non-dangerous waste areas and activities)

S01, Container Storage: The two container storage areas consist of packaged mixed waste maintenance debris (e.g., pumps, valves, jumpers, etc.) stored in the Staging, Maintenance, and Laydown Area within the main process building and spent resin stored in the Spent Resin Handling Area. The container storage process design capacity for the Staging Maintenance, and Laydown Area was derived from forecasted maintenance requirements and plant component design life, which is 60 cubic yards per year. This amount was doubled to account for any unexpected, long-duration plant outages requiring more than forecasted maintenance work. The maximum container storage process design capacity for the Staging Maintenance and Laydown Area is 120 cubic yards per year. The estimated annual quantity of waste is derived from the summed mass of forecasted maintenance debris generated annually.

The maximum container storage process design capacity for the Spent Resin Handling Area is the volume of 5 High-Integrity Containers (HICs) that could consist of up to four in storage positions and one loaded on the transport trailer. Each HIC will hold approximately 480 gallons of spent resin for a total storage capacity of 2,400 gallons at any one time. The estimated annual quantity of waste is derived from the total volume of 25% resin / 75% water mixture contained in five HICs converted to a mass using a specific gravity of 1.37 for the resin.

T04, Container Treatment: The process for removing spent and eluted resin from the two IX Columns involves sluicing with water. The spent resin is sluiced from both IX Columns directly into the HICs. In order to transport the spent resin for treatment and disposal, the resin must be dewatered in the HIC following sluicing. The spent resin sluice waste stream contains nominally 75 percent water, which represents an estimated 1,800 gallons of dewatering to be conducted annually. The dewatering solution will be sent from the HIC to the Cesium Product Tank for eventual return to the DST System.

The balance of LAWPS facilities includes utilities, chemical reagents storage, personnel trailers, fresh resin handling area, HVAC, and equipment storage. Refer to the LAWPS Addenda C, Process Information for additional facility details.

NAICS Codes

NAICS Code 562211 applies to LAWPS and the codes listed in Section IX.B – IX.D apply to the Hanford Facility.

EXAMPLE FOR COMPLETING ITEMS XII and XIII (shown in lines numbered X-1, X-2, and X-3 below): A facility has two storage tanks that hold 1200 gallons and 400 gallons respectively. There is also treatment in tanks at 20 gallons/hr. Finally, a one-quarter acre area that is two meters deep will undergo in situ *vitrification*.

Section XII. Process Codes and Design Capacities								Section XIII. Other Process Codes								
Line Number		A. Process Codes (enter code)			B. Process Design Capacity		C. Process Total Number of Units	Line Number		A. Process Codes (enter code)			B. Process Design Capacity		C. Process Total Number of Units	D. Process Description
					1. Amount	2. Unit of Measure (enter code)							1. Amount	2. Unit of Measure (enter code)		
X	1	S	0	2	1,600	G	002	X	1	T	0	4	700	C	001	In situ vitrification
X	2	T	0	3	20	E	001									
X	3	T	0	4	700	C	001									
	1	S	0	1	2,400	G	001	1.	1	T	0	4	21,880	P	001	Container Treatment
	2	S	0	1	120	Y	001		2							
	3	S	0	2	415,610	G	007		3							
	4	T	0	1	9,500	U	007		4							
	5								5							
	6								6							
	7								7							
	8								8							
	9								9							
1	0							1	0							
1	1							1	1							
1	2							1	2							
1	3							1	3							
1	4							1	4							
1	5							1	5							
1	6							1	6							
1	7							1	7							
1	8							1	8							
1	9							1	9							
2	0							2	0							
2	1							2	1							
2	2							2	2							
2	3							2	3							
2	4							2	4							
2	5							2	5							

XIV. Description of Dangerous Wastes

Example for completing this section: A facility will receive three non-listed wastes, then store and treat them on-site. Two wastes are corrosive only, with the facility receiving and storing the wastes in containers. There will be about 200 pounds per year of each of these two wastes, which will be neutralized in a tank. The other waste is corrosive and ignitable and will be neutralized then blended into hazardous waste fuel. There will be about 100 pounds per year of that waste, which will be received in bulk and put into tanks.

Line Number	A. Dangerous Waste No. (enter code)	B. Estimated Annual Quantity of Waste	C. Unit of Measure (enter code)	D. Processes	
				(1) Process Codes (enter)	(2) Process Description [If a code is not entered in D (1)]
X 1	D 0 0 2	400	P	S 0 1 T 0 1	
X 2	D 0 0 1	100	P	S 0 2 T 0 1	
X 3	D 0 0 2				Included with above
1	D 0 0 2	19,550	T	S 0 2 T 0 1	
2	D 0 0 4	21,880	P	S 0 1 T 0 4	
3	D 0 0 5	33,400	P	S 0 1	Includes debris
4	D 0 0 6				Included with above
5	D 0 0 7				Included with above
6	D 0 0 8				Included with above
7	D 0 0 9				Included with above
8	D 0 1 0				Included with above
9	D 0 1 1				Included with above
10	D 0 1 8				Included with above
11	D 0 1 9				Included with above
12	D 0 2 2				Included with above
13	D 0 2 8				Included with above
14	D 0 2 9				Included with above
15	D 0 3 0				Included with above
16	D 0 3 3				Included with above
17	D 0 3 4				Included with above
18	D 0 3 5				Included with above
19	D 0 3 6				Included with above
20	D 0 3 8				Included with above
21	D 0 3 9				Included with above
22	D 0 4 0				Included with above
23	D 0 4 1				Included with above
24	D 0 4 3				Included with above
25	F 0 0 1				Included with above

EPA/State ID Number	W	A	7	8	9	0	0	0	8	9	6	7

Continuation of Section XIV. Description of Dangerous Waste

Line Number	A. Dangerous Waste No. (enter code)				B. Estimated Annual Quantity of Waste	C. Unit of Measure (enter code)	D. Process									
							(1) Process Codes (enter)									(2) Process Description [If a code is not entered in D (1)]
26	F	0	0	2												Included with above
27	F	0	0	3												Included with above
28	F	0	0	4												Included with above
29	F	0	0	5												Included with above
30	W	P	0	1												Included with above
31	W	P	0	2												Included with above
32	W	T	0	1												Included with above
33	W	T	0	2												Included with above
34																
35																
36																
37																
38																
39																
40																
41																
42																
43																
44																
45																
46																
47																
48																
49																
50																
51																
52																
53																
54																
55																

XV. Map

Attach to this application a topographic map of the area extending to at least one (1) mile beyond property boundaries. T map must show the outline of the facility; the location of each of its existing and proposed intake and discharge structures; each of its dangerous waste treatment, storage, recycling, or disposal units; and each well where fluids are injected underground. Include all springs, rivers, and other surface water bodies in this map area, plus drinking water wells listed in public records or otherwise known to the applicant within ¼ mile of the facility property boundary. The instructions provide additional information on meeting these requirements.

XVI. Facility Drawing

All existing facilities must include a scale drawing of the facility (refer to Instructions for more detail).

XVII. Photographs

All existing facilities must include photographs (aerial or ground-level) that clearly delineate all existing structures; existing storage, treatment, recycling, and disposal areas; and sites of future storage, treatment, recycling, or disposal areas (refer to Instructions for more detail).

XVIII. Certifications

I certify under penalty of law that this document and all attachments were prepared under my direction or supervision in accordance with a system designed to assure that qualified personnel properly gather and evaluate the information submitted. Based on my inquiry of the person or persons who manage the system, or those persons directly responsible for gathering the information, the information submitted is, to the best of my knowledge and belief, true, accurate, and complete. I am aware that there are significant penalties for submitting false information, including the possibility of fine and imprisonment for knowing violations.

Operator Name and Official Title (type or print)	Signature	Date Signed
Kevin W. Smith, Manager U.S. Department of Energy Office of River Protection	Ke W. Smith	7/11/17
Co-Operator* Name and Official Title (type or print)	**Signature**	**Date Signed**
Mark A. Lindholm President and Project Manager Washington River Protection Solutions, LLC		6/8/17
Co-Operator – Address and Telephone Number* P.O. Box 850 Richland, WA 99352 (509) 376-3492		
Facility-Property Owner Name and Official Title (type or print)	**Signature**	**Date Signed**
Kevin W. Smith, Manager U.S. Department of Energy Office of River Protection	Ke W. Smith	7/11/17

XIX. Comments

No comments included.

Table A.1. LAWPS Tank Treatment and Storage System Primary Components

Component	Location	Volume (gallons)[a]	Function
Filter Feed Tank	Filter Feed Vault	6,100	Receipt from DST and feed to cross-flow filters.
Cross-Flow Filter (2 total)	Filter/IX Vault	NA	Filtration – solids removal.
Ion Exchange Column (2 total)	Filter/IX Vault	NA	Ion Exchange – cesium removal.
Treated Waste Delay Tank	IX Delay Tank Pit	2,490	Delay tank for radiological characterization.
Cesium Tank	Cesium Vault	35,000	Receipt of IX resin elution.
Lag Storage Tank (3 total)	Lag Storage Vault	124,000 (each)	WTP acceptance verification sampling, feed to WTP LAW.
Verification Tank	Spent Resin Handling Area	20	Spent resin dewatering.

[a]Tank capacities represent maximum volumes based on physical dimensions.

Figure A.1. LAWPS Site Plan

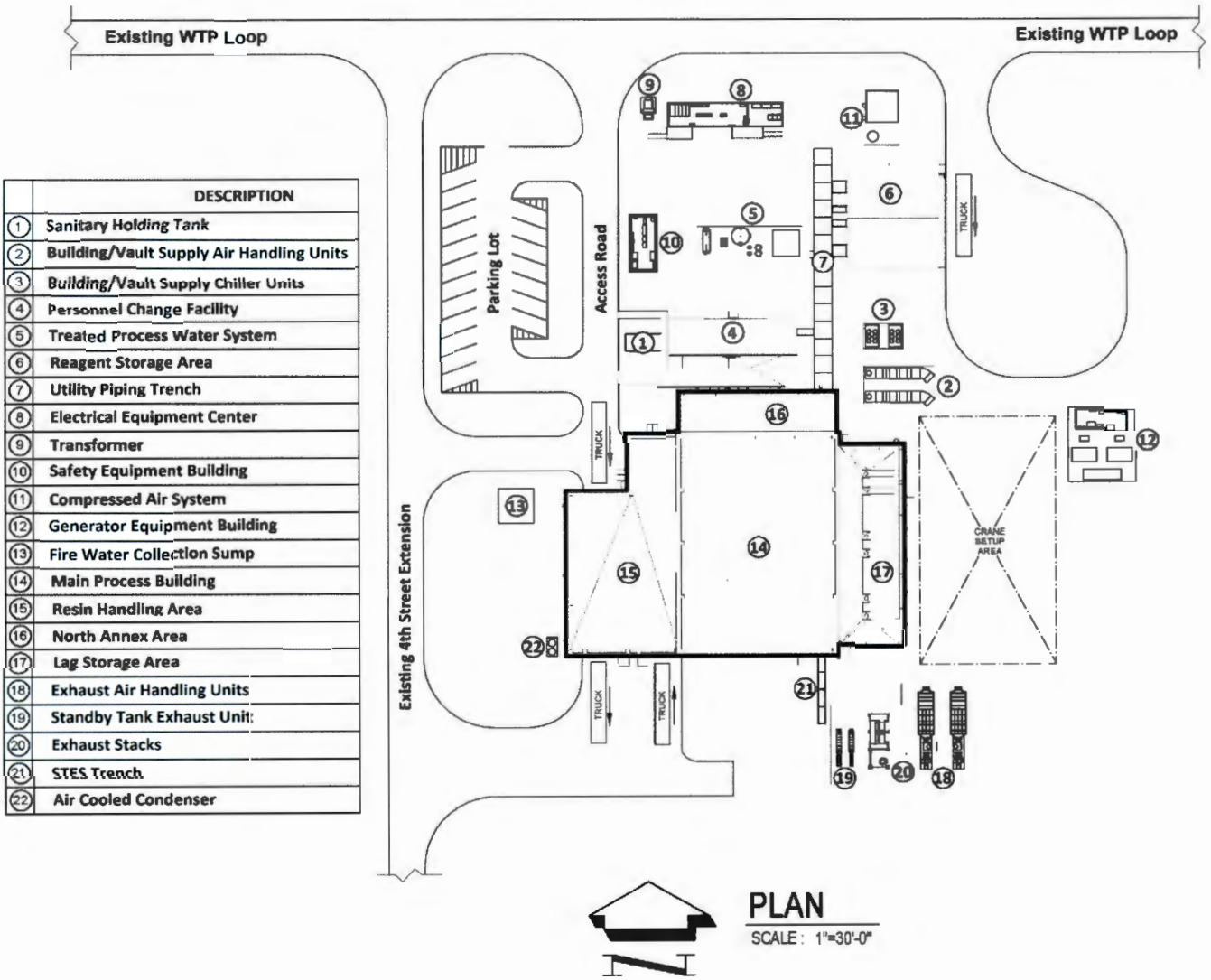

	DESCRIPTION
1	Sanitary Holding Tank
2	Building/Vault Supply Air Handling Units
3	Building/Vault Supply Chiller Units
4	Personnel Change Facility
5	Treated Process Water System
6	Reagent Storage Area
7	Utility Piping Trench
8	Electrical Equipment Center
9	Transformer
10	Safety Equipment Building
11	Compressed Air System
12	Generator Equipment Building
13	Fire Water Collection Sump
14	Main Process Building
15	Resin Handling Area
16	North Annex Area
17	Lag Storage Area
18	Exhaust Air Handling Units
19	Standby Tank Exhaust Units
20	Exhaust Stacks
21	STES Trench
22	Air Cooled Condenser

Figure A.2. LAWPS General Arrangement, Plan View

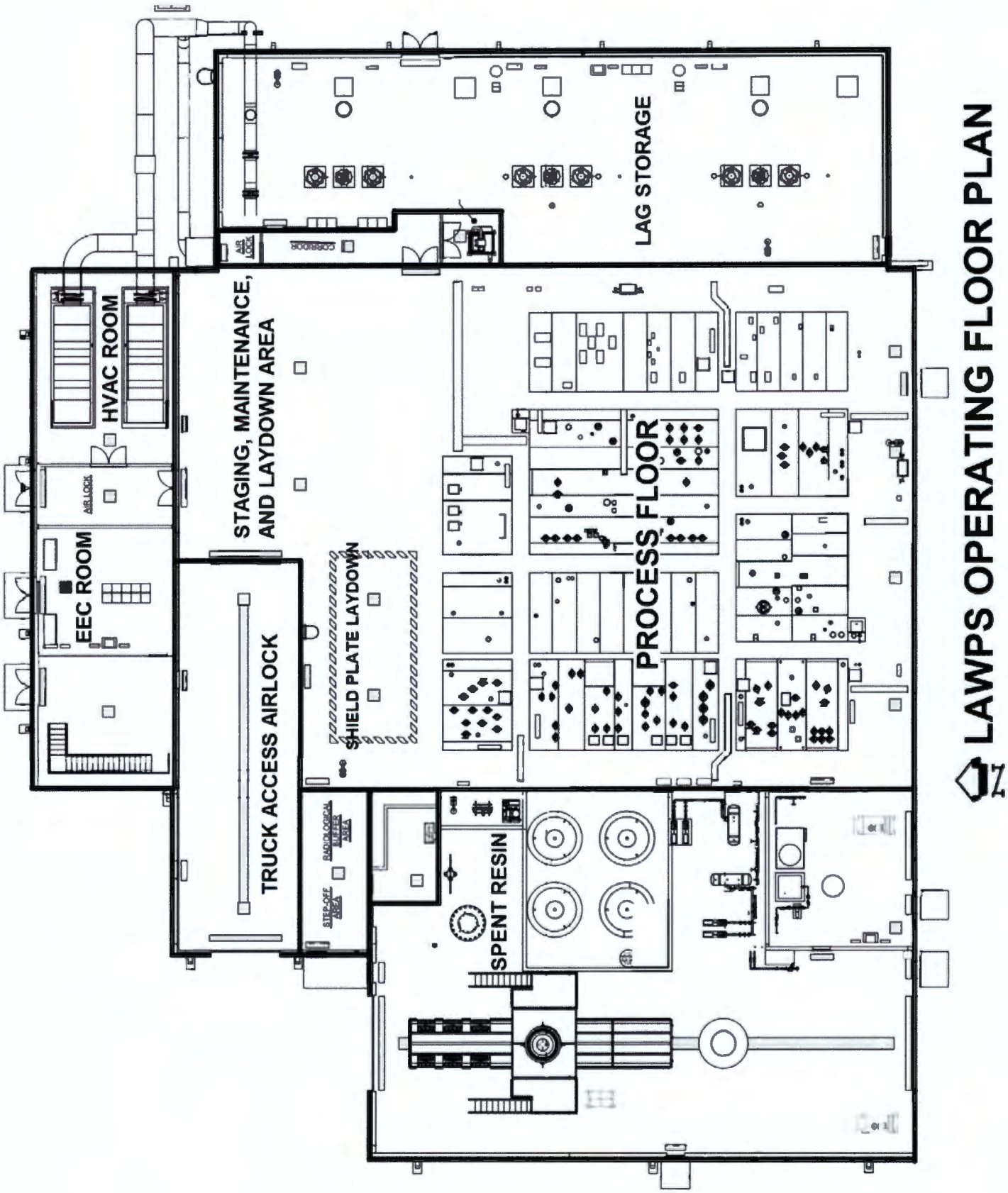

Figure A.3. LAWPS Building Section View

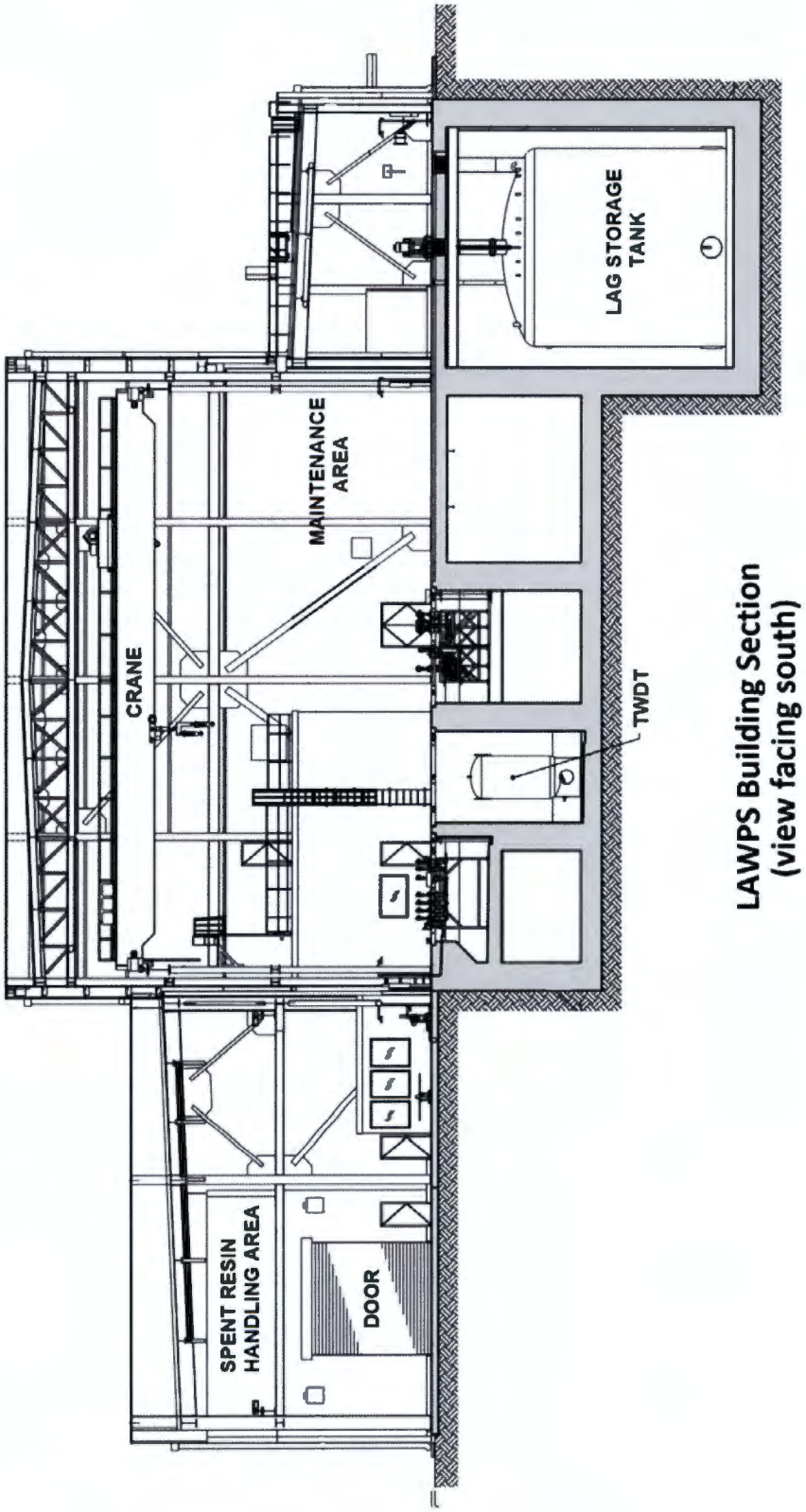

Figure A.4. LAWPS Section View Showing Cesium Product Tank and Lag Storage (Facing North)

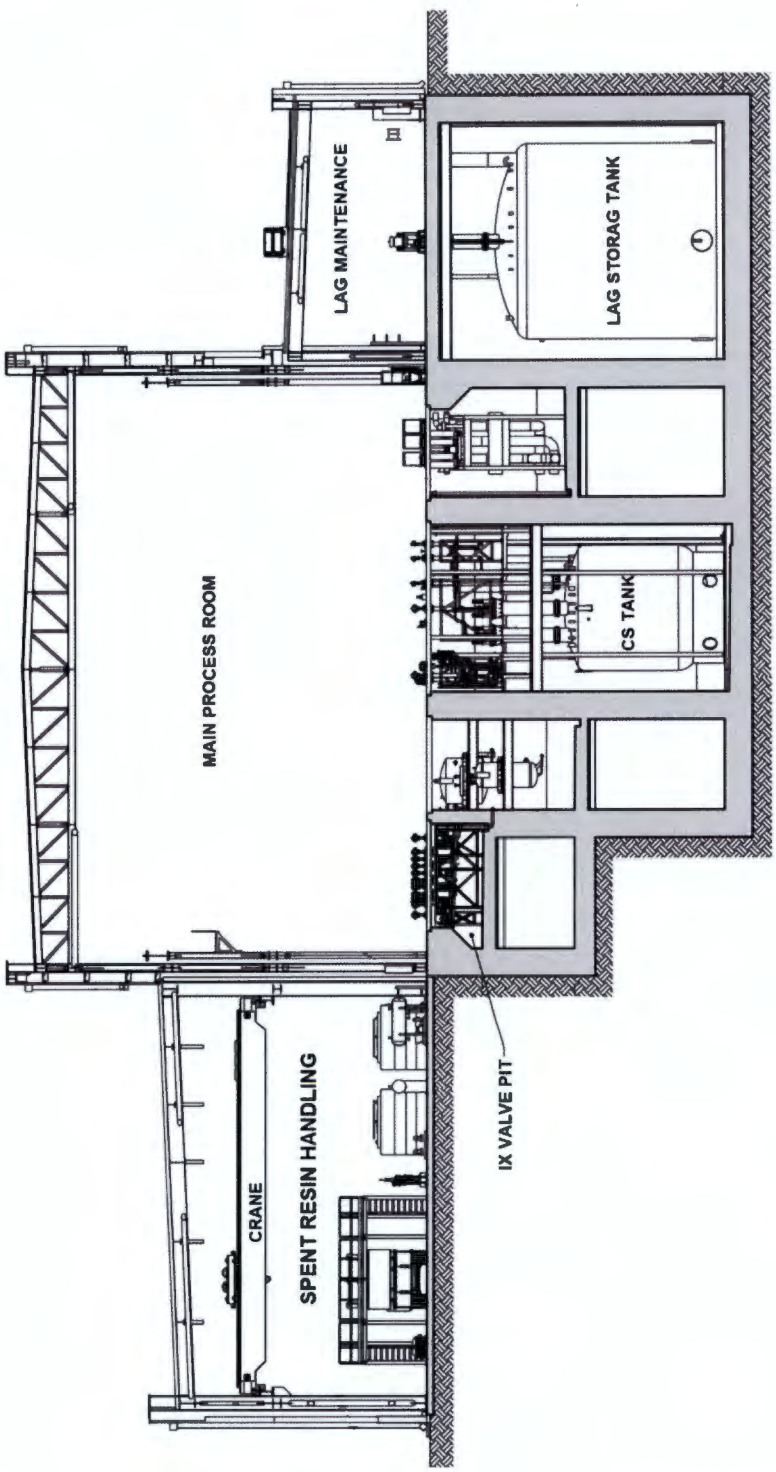

Figure A.5. Lag Storage Tanks, Section View

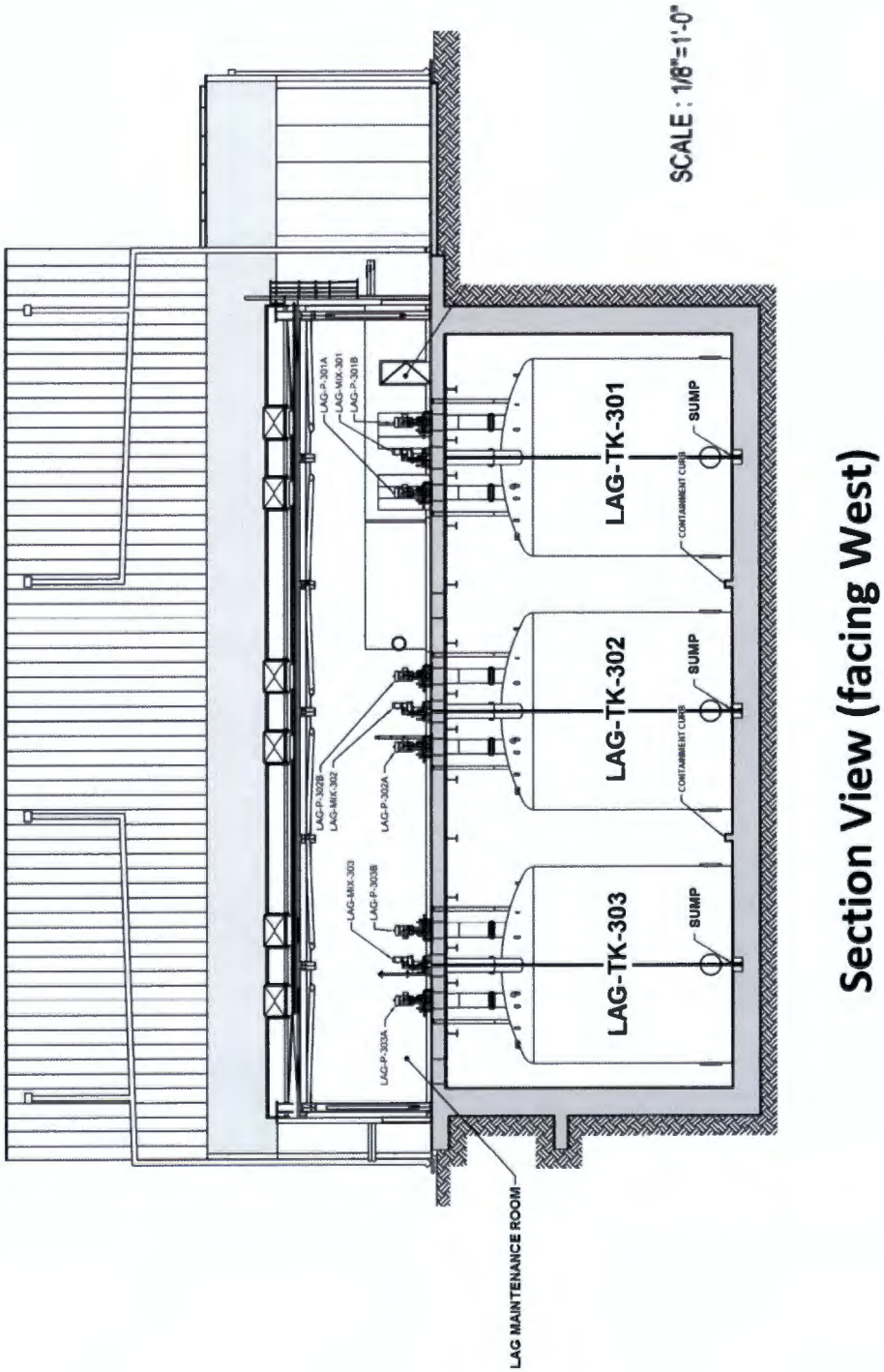

(Facing West)

Figure A.6. Staging, Maintenance, and Laydown Area, Plan View

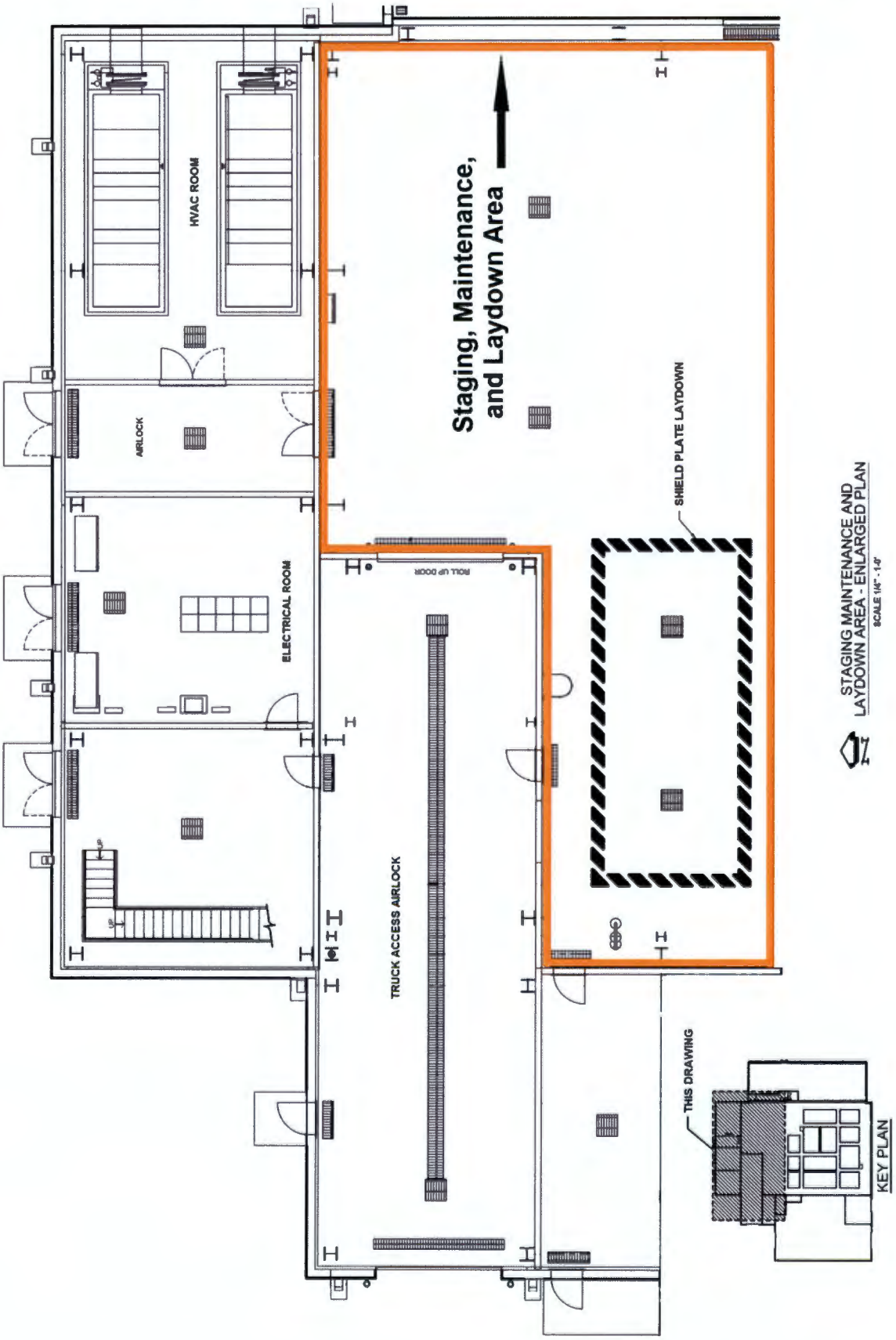

Figure A.7. Spent Resin Handling Area, Section View (Facing North)

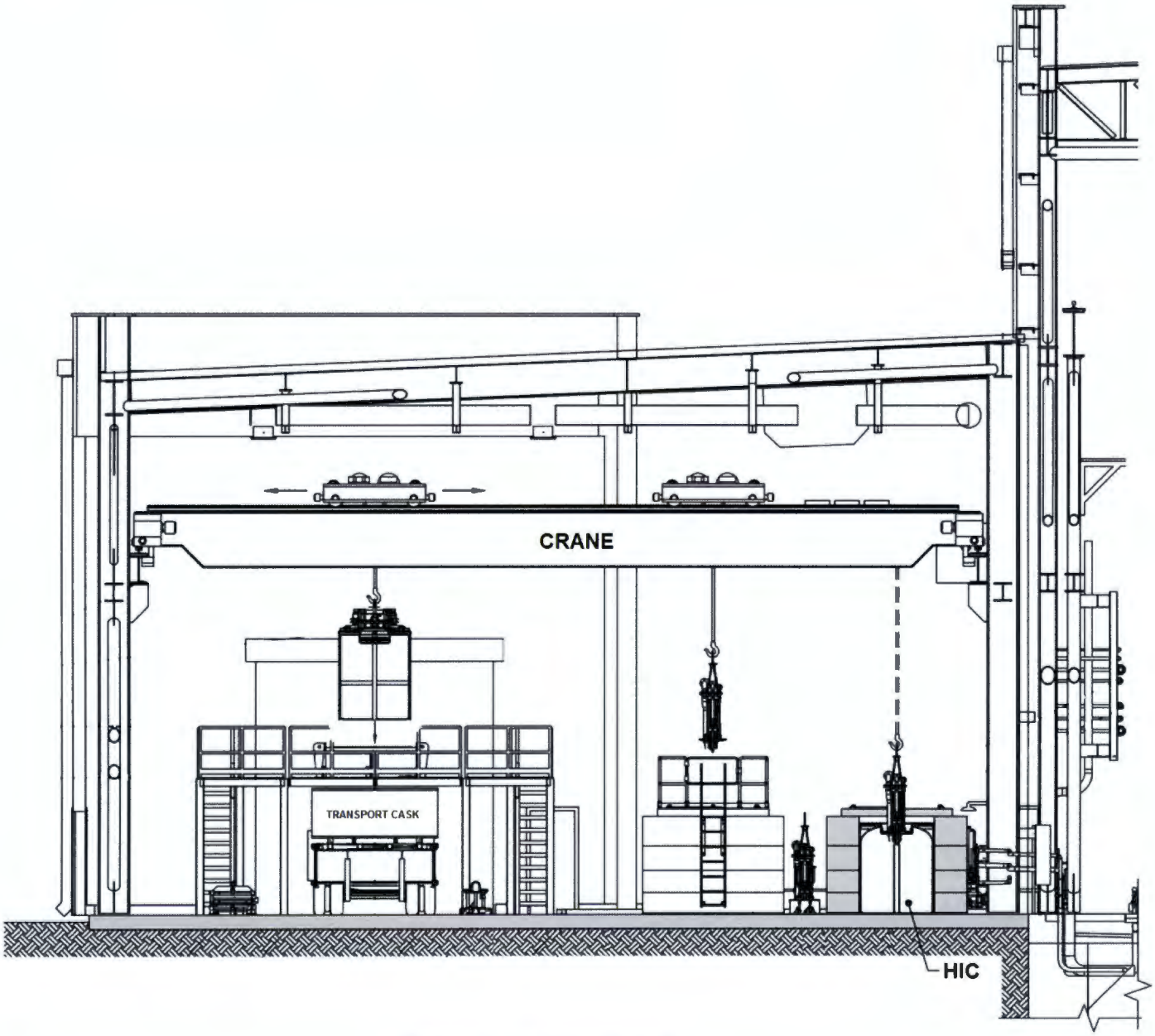

Photograph 1. LAWPS Site, January 2016
(View facing southeast, WTP construction site in the background)

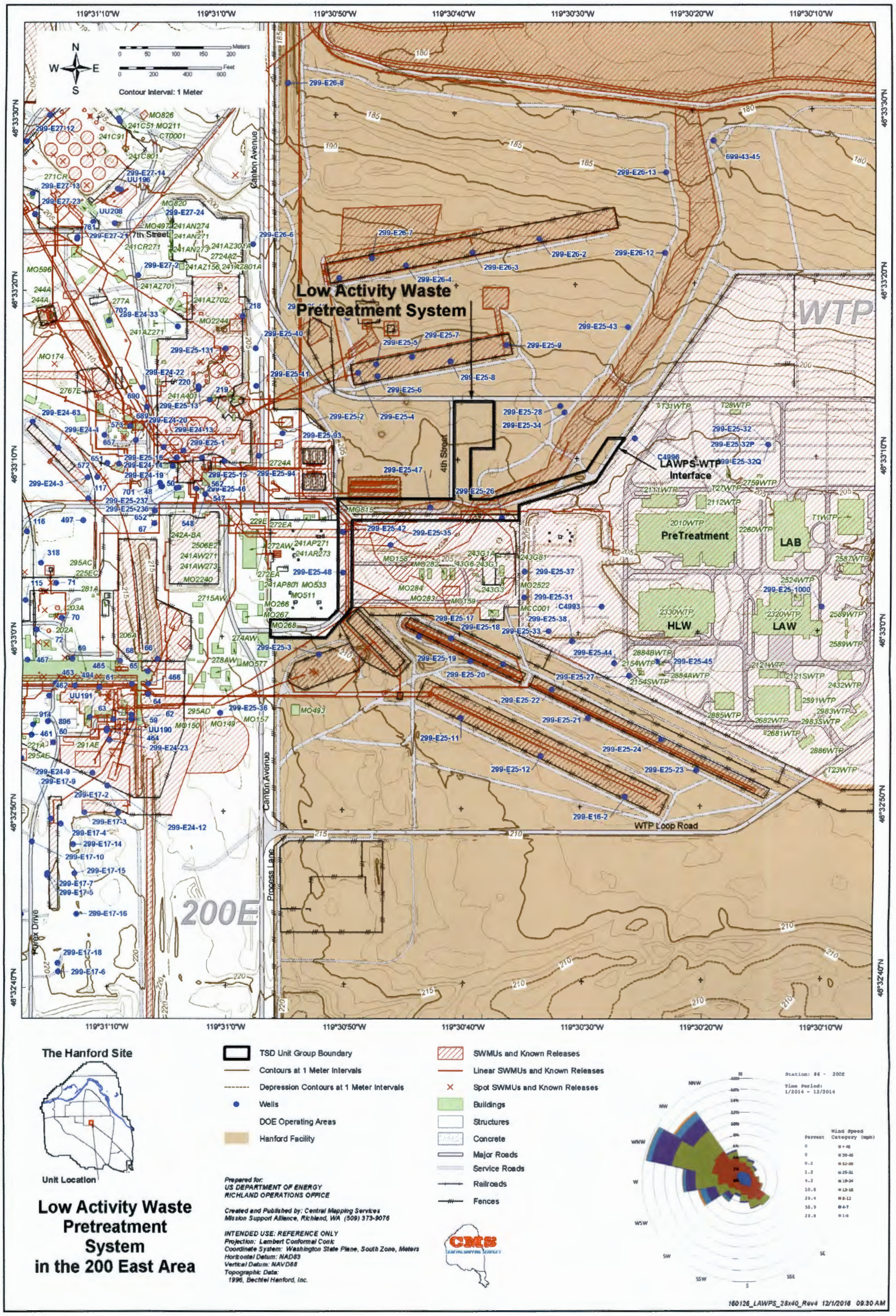

Figure A.8. LAWPS Topographic Map

This page intentionally left blank.

ADDENDUM B
WASTE ANALYSIS PLAN

This page intentionally left blank.

ADDENDUM B
WASTE ANALYSIS PLAN

CONTENTS

B. WASTE ANALYSIS PLAN B.1
B.1 Introduction B.1
B.2 Purpose B.1
B.3 Scope B.1
B.3.1 Feed Qualification Tank Acceptance Process B.1
B.3.2 Dangerous Waste Generated from the Treatment Process B.1
B.4 Low Activity Waste Pretreatment System Process Description B.2
B.5 Waste Characterization B.2
B.5.1 General Constituent Description B.2
B.5.2 Classification of Waste B.2
B.5.3 Dangerous Waste Numbers B.3
B.6 Waste Acceptance Process B.3
B.7 Feed Qualification Tank Waste Acceptance Process B.4
B.7.1 Selecting Feed Qualification Tanks B.4
B.7.2 Qualification Feed Tank Sampling B.4
B.7.3 Assessing Qualification Feed Tank Sampling and Analysis Results B.5
B.8 Sampling Process Effluent Dangerous Wastes Generated From Treatment B.5
B.8.1 Assessing Process Effluent Sampling and Analysis Results B.6
B.9 Low Activity Waste Pretreatment System Waste Acceptance Criteria B.6
B.9.1 Qualification Feed Tank Waste Acceptance Criteria B.6
B.9.2 Qualification Feed Tank Parameters B.7
B.10 Analytical Methods and Quality Assurance and Quality Control B.12
B.10.1 Laboratory Selection B.12
B.10.2 Analytical Methods B.12
B.10.3 Laboratory Quality Assurance and Quality Control B.12
B.10.4 Data Evaluation B.14
B.10.5 Sampling Analysis Plan B.14

FIGURES

Figure B.1. LAWPS Waste Acceptance Process B.6

TABLES

Table B.1. Waste Designation for Feed Stream and Treated LAW B.3
Table B.2. Qualification Feed Tank Waste Analysis Parameters B.7
Table B.3. Treated LAW Waste Analysis Parameters B.9
Table B.4. Summary of Method Changes B.11
Table B.5. Qualification Feed Tank and LAWPS Lag Storage Tank Sample Point Selection B.11
Table B.6. Analytical Methods/Instrumentation and Quality Control Parameters B.13

B. WASTE ANALYSIS PLAN

B.1 Introduction

This waste analysis plan (WAP) addresses data and analysis necessary to manage the waste at the Low Activity Waste Pretreatment System (LAWPS) according to requirements included in the *Hanford Facility Resource Conservation and Recovery Act Permit, Dangerous Waste Portion* (WA7890008967) (Permit), and Washington Administrative Code (WAC), Chapter 173-303.

Modifications of the WAP require modifications of the Permit. Permit modifications are discussed in Hanford Facility Permit Condition I.C and WAC 173-303-830.

B.2 Purpose

The purpose of the WAP is to ensure the waste at LAWPS is managed in accordance with WAC 173-303-300. Record keeping requirements applicable to the Hanford Facility are described in the Hanford Facility General Information Portion, DOE/RL-91-28 (as amended). Records specific to LAWPS will be managed in the LAWPS Operating Record that is kept as part of the Hanford Facility Operating Record WAC-173-303-300(2)(b).

The WAP also ensures the waste analysis is comprehensive and reflects the outcome of the *Integrated DFLAW Feed Qualification Data Quality Objectives* (DQO), RPP-RPT-59494 (as amended), and sample analysis performed on the tank waste feed stream to be treated at the LAWPS. Sampling and analysis criteria identified in the DQO related to meeting RCRA requirements are included as an integral part of this WAP.

Regulatory and safety issues are addressed in this WAP and establish boundary conditions for waste to be received and treated at the LAWPS. These boundary conditions establish limits for items such as reactivity, ignitability, and waste compatibility. Waste that exceeds the boundary conditions would not be acceptable for processing without further actions, such as mixing or blending with other waste or water. Any necessary pre-treatment such as mixing or blending would occur at dangerous waste management unit(s) other than the LAWPS.

B.3 Scope

This WAP discusses sampling and analysis of waste to determine the acceptability of the waste in Double-Shell Tank System (DST) 'feed qualification tank(s)' for processing at the LAWPS prior to its acceptance at the Waste Treatment and Immobilization Plant (WTP) Low Activity Waste (LAW) facility. A 'feed qualification tank(s)' means one or more tanks in the DST System, which may not be the 'direct' feed tank AP-107. Refer to additional discussion in Section B.7 for 'feed qualification tanks.' Note: 241-AP-107 is the first feed qualification tank. Following the initial campaign, subsequent qualification tanks will be selected from the AP Farm. However, modifications to the feed vector may result in use of other DSTs as feed qualification tanks.

B.3.1 Feed Qualification Tank Acceptance Process

This process determines the acceptability of waste from the DST System to LAWPS prior to acceptance of the waste for treatment at LAWPS and WTP LAW facility. Note; waste in the feed qualification tanks will be required to meet the WTP LAW waste acceptance criteria except for weight percent solids (wt %) and cesium concentration.

B.3.2 Dangerous Waste Generated from the Treatment Process

Sampling and analysis is used to characterize the treated LAW stream generated from the LAWPS treatment process. The treated process waste is transferred to the Operating Unit Group (OUG) 10, Waste Treatment and Immobilization Plant (WTP) Low-Activity Waste (LAW) for vitrification. Sampling can be performed at the LAWPS and at WTP LAW to ensure the treated tanks waste meets the WTP LAW facility waste acceptance criteria. A discussion of treated LAW sampling at the LAWPS is included in

this WAP, while discussion of any additional sampling at WTP LAW is included in the WTP, Chapter 3, *Waste Analysis Plan*. Refer to Section B.9.2.

B.4 Low Activity Waste Pretreatment System Process Description

The LAWPS is located in the 200 East Area of the Hanford Site and provides treatment and storage of incoming waste from the DST System. Tank waste supernatant is transferred from DST 241-AP-107 to the LAWPS Filter Feed Tank (FFT) where the waste is filtered through the Cross Flow Filtration (CFF) system with the remainder containing incrementally higher solids recirculating back to 241-AP-107. The filtered waste then enters two Ion Exchange (IX) columns to remove soluble cesium. The treated Low-Activity Waste (LAW) is then transferred to one of three LAW Lag Storage Tanks by way of the Treated Waste Delay Tank (TWDT). The TWDT provides a temporary hold-up wherein the treated waste is monitored for high radiation levels associated with cesium prior to reaching the Lag Storage Tanks. Waste determined to be over the cesium level defined in the WTP waste acceptance criteria can be returned to the FFT for reprocessing or returned to the DST system. Process engineering will determine whether the waste will be returned to the FFT for additional treatment or sent back to the DST system. Treated LAW with an acceptable level of cesium will be transferred to the Lag Storage Tanks and sampled, if necessary, confirming the WTP process acceptance criteria are met prior to transfer to WTP LAW for vitrification. The need for sampling at the lag storage tanks continues to be evaluated at this time.

A more detailed description of the LAWPS process is provided in Addendum C, Process Information.

B.5 Waste Characterization

Waste feed qualification for a campaign is based on sample analysis and process knowledge. The contents of the DST System 'feed qualification tanks' are sampled to demonstrate acceptability for processing in the LAWPS with the results evaluated against LAWPS waste acceptance criteria before the campaign proceeds. To meet the LAWPS waste acceptance criteria, the contents of several tanks could be blended together in the feed qualification tanks prior to processing.

B.5.1 General Constituent Description

The mixed waste to be stored and treated in LAWPS is an aqueous solution containing dissolved inorganic salts such as sodium, potassium, aluminum, hydroxides, nitrates, and nitrites with some tanks having detectable levels of heavy metals such as lead, chromium, cadmium, mercury. The radionuclide content includes fission products such as Sr-90 and Cs-137, and actinide series elements such as uranium and plutonium. Small quantities of ammonia and organics, such as acetone, butanol, and tri-butyl phosphate, could be present. The physical consistency of the waste in the DST System ranges from aqueous supernate to thick sludge. The only waste feed to the LAWPS is aqueous supernate; tank waste sludge is not processed through the LAWPS.

The continuous slurry return to AP-107 from LAWPS is an aqueous solution containing the same components as the feed stream with increased concentrations of filtered solid forms of non-volatile organic and inorganic constituents.

B.5.2 Classification of Waste

The waste entering the LAWPS facility is classified as a mixed waste because it contains a radioactive component and a chemical component that designates as a dangerous waste. The waste generated from the LAWPS processes are designated and assigned the listed dangerous waste numbers for waste stored in the DST System as follows.

- Waste generated from the treatment process includes slurry return to DST, Cs eluate returns to DST via the Cs product tank, treated LAW and various secondary solid waste (e.g., spent IX resin and solid maintenance debris such as pumps and valves). Each waste stream is mixed waste since they are derived from the treatment of the DST System listed dangerous waste due to waste

numbers F001 through F005. The streams may also exhibit the dangerous waste characteristic of corrosivity (WAC 173-303-090).

Other LAWPS waste streams are generated that do not contact mixed waste solutions, such as cooling water. These waste streams are not discussed in this WAP because these streams are not designated as dangerous waste under WAC 173-303. Any waste sampling and analysis for purposes of designating secondary solid waste will be conducted pursuant to WAC 173-303-170, which outside the scope of this Addendum. This would include mixed waste debris generated from maintenance activities and spent ion exchange resin.

B.5.3 Dangerous Waste Numbers

The LAWPS is specifically designed to accept DST System waste directly from feed tank AP-107. Waste acceptable for transfer to the LAWPS could be assigned any of the dangerous waste numbers found in Addendum A, Part A Form. These numbers are identical to those in the DST System and 204-AR Waste Unloading Station Part A, with the exception of ignitability (D001) and reactivity (D003). Because LAWPS accepts only aqueous phase supernatant waste feed, the characteristics of ignitability and reactivity do not apply. Process knowledge and historical data demonstrate that the slurry stream returning to the DST System contains the same dangerous waste constituents as the waste feed, so the same dangerous waste numbers are applicable to the feed and slurry with the exception of that noted immediately above.

Table B.1 lists the dangerous waste numbers assigned to the treated LAW sent to the WTP LAW for vitrification. The treated LAW is designated with listed dangerous waste numbers F001 through F005 because it is derived from treatment of DST System waste assigned these numbers. In addition to the F001 through F005 numbers, treated LAW transferred to WTP LAW may designate for one or more applicable toxicity characteristic dangerous waste numbers.

Table B.1. Waste Designation for Feed Stream and Treated LAW

Waste Number	Characteristic/Source	Basis for Designation
F001	Spent halogenated solvents	Derived from F001 waste
F002	Spent halogenated solvents	Derived from F002 waste
F003	Spent nonhalogenated solvents	Derived from F003 waste
F004	Spent nonhalogenated solvents	Derived from F004 waste
F005	Spent nonhalogenated solvents	Derived from F005 waste

The slurry return is not stored at the LAWPS, as it is continuously recirculated back to the DST system from the FFT, and therefore is not subject to this WAP. In addition to the F001 through F005 dangerous waste numbers, the slurry may designate for one or more applicable toxicity characteristic dangerous waste numbers.

B.6 Waste Acceptance Process

This section describes the actions performed before every campaign to determine feed tank qualification waste is acceptable for treatment at the LAWPS.

The LAWPS operates as a 'campaign" treatment system from the selected AP Farm qualification feed tanks (or other suitable DST), where each batch of waste must be accepted at both LAWPS and WTP LAW facility. These tanks alternately batch feed AP-107, which in turn continually feeds LAWPS processing activities generating treated LAW. LAW is temporarily stored in one of three Lag Storage Tanks, which undergo a rotation of receiving waste, sampling waste, and transferring waste to the WTP LAW facility. Feed for each campaign must follow this waste acceptance process for waste verification and waste acceptance. Evaluation of data produced from the sampling and analysis of feed qualification

tank waste for each campaign are documented in the campaign specific process control plan, process memo and associated engineering calculations, which are maintained in the Hanford Facility Operating Record, LAWPS, unit specific portion. Process control plans are prepared to describe and define the specific controls required for a planned campaign. Each process control plan includes the information described below:

- **Waste Feed Description** – describes the source, volume, and any potential mixing or blending data.
- **Campaign Objectives** – details the volume estimates and specific gravities expected for each campaign.
- **Feed Qualification Tank Sampling and Analysis Evaluation** – describes the actual sampling and analysis data for each feed qualification tank for each campaign. This evaluation includes a review of data against the LAWPS and WTP LAW waste acceptance criteria, and other health and safety controls beyond the scope of the Permit for operation of the LAWPS.
- **Process Controls and Campaign Recommendations** – describes the limits and conditions for each campaign based on the campaign objectives and feed qualification tank analytical data.

B.7 Feed Qualification Tank Waste Acceptance Process

This section describes the waste acceptance process that occurs in a feed qualification tank. Refer to Addendum C, Process Information, for more detail regarding overall process flow.

The following activity is performed to determine if waste feed will meet the LAWPS and WTP LAW waste acceptance criteria.

- **Evaluate Potential for Separable Organic Phase:** Prior to acceptance, the absence of separable organics in the feed must be verified or managed to preclude transfer to the LAWPS.

B.7.1 Selecting Feed Qualification Tanks

The Direct Feed Low Activity Waste program has designated AP-107 as the dedicated feed tank with the qualification feed tanks being selected from AP Farm. However, other DST tanks may be used in this capacity if necessary. The initial feed campaign will consist of supernatant waste currently contained in the DST system that will be transferred to AP-107 for chemical adjustment (if necessary) and feed qualification activities. For all subsequent LAWPS campaigns, chemical adjustments and feed qualification activities will be performed in the selected qualification feed tanks. As a campaign completes in AP-107, the qualified feed will be transferred from the qualification tank, added to AP-107 heel contents (nominally 24 inches [61 centimeters] of supernatant above the solids level), and fed forward to LAWPS.

B.7.2 Qualification Feed Tank Sampling

Through development of a tank Sampling and Analysis Plan (SAP), as depicted in Figure B.1, the waste in the tank is sampled and analyzed, and the data is evaluated to confirm waste acceptability. Once developed, SAPs will be kept in the LAWPS Facility Operating Record. Qualification feed tanks are sampled and analyzed to confirm waste acceptability. This WAP reflects the rationale for determining the number of samples in the *Integrated DFLAW Feed Qualification Data Quality Objectives* (DQO), RPP-RPT-59494 (as amended).

The minimum number of samples recommended from a statistical analysis of the project tank waste composition is three (3). This number is considered a minimum because the statistical analysis uses, as inputs, past Tank Farms supernatant sample results and modeling predictions to estimate the standard deviation and mean concentrations of DFLAW feed. Given some uncertainties, addition samples are to be collected to account for the uncertainty in the statistical analysis inputs. Based on Tank Farms operating experience, additional samples are also needed as a contingency for unexpected sample losses.

Therefore a total of five (5) samples of aqueous qualification feed tank waste supernatant, from one tank riser, will be collected. These samples are adequate to ensure the resulting waste characterization data are of sufficient quality for the data's planned purpose.

The number of samples specified in the DQO report provides a planning basis for future tank characterization efforts. Actual feed composition of staged feed may be different from the prediction. Therefore, the number of samples may also be determined for actual staged feed on a tank by tank basis using the latest composition estimate for that feed.

The data are compared to the LAWPS waste acceptance criteria and applied to the LAWPS Process Control Plan for purposes of predicting the treated LAW as part of the WTP LAW acceptance process. The rationale for this statement is that the estimates of the variability of DST System content wastes properties is sufficiently defined and consistent that five (5) samples are sufficient, which is supported by the DQO. No solids or sludge samples are collected as only supernatant will be treated through LAWPS.

The five (5) samples will be collected from the following depths. One (1) surface sample to address the possible existence of a separable organic layer and four (4) subsurface samples are obtained from each qualification feed tank. The depths of the subsurface samples are determined by the Permittees based on best professional judgment and will be specified in the SAP. For waste transfers into the qualification feed tanks, sampling occurs after wastes are blended. The identified qualification feed tanks coupled with process knowledge of the dedicated feed tank AP-107 and sample analysis provide a representative set of data for determining waste acceptance in the LAWPS and subsequently, WTP LAW. This is because of the consistency in the type of feed waste and the source of the waste. Waste in qualification feed tanks was first accepted, or will be, into the DST System by meeting the corresponding DST System waste acceptance criteria as established in the *Double-Shell Tank Waste Analysis Plan*, RPP-29002 (as amended). Waste management in the DST System results in supernatant that is relatively homogeneous within each tank recognizing some vertical gradients may exist within each tank caused by the transfer history and limited mixing actions within the DST System. The potential for vertical gradients prompt subsurface sample collection. Lateral stratification has not been observed in past DST operations as documented in the 242-A Evaporator operating RCRA permit. Historical sampling campaigns show single riser sampling is equivalent to sampling from two risers as lateral supernatant stratification is not observed in tanks because convection currents keep the supernatant sufficiently mixed. This evaluation formed the basis for a permit modification for the 242-A Evaporator that allows for single riser sampling.

B.7.3 Assessing Qualification Feed Tank Sampling and Analysis Results

Qualification feed tank sampling and analysis, in conjunction with the waste acceptance criteria in Section B.9, are used to assess whether established limits (action values are defined in the *Integrated DFLAW Feed Qualification Data Quality Objectives*, RPP-RPT-59494 (as amended), and LAWPS unit-specific conditions and Addendum B, Waste Analysis Plan would be exceeded. Based on the results, three possible options are implemented:

- The waste is acceptable for processing at the LAWPS without further actions.
- The waste is unacceptable for processing as a single batch, but is acceptable if blended with other waste to be processed to satisfy the LAWPS waste acceptance criteria.
- The waste is unacceptable for processing, and additional evaluation and corrective actions are necessary to establish acceptance.

B.8 Sampling Process Effluent Dangerous Wastes Generated From Treatment

Three primary mixed waste streams are generated as the result of the LAWPS process: treated LAW for transfer to WTP LAW, waste slurry from the FFT continuously recirculated back to AP-107, and return effluent from Cesium Product tank. Sampling of the waste slurry is not necessary under this WAP in order to return the waste back to the DST System as this is a continuous cycle and only differs from the feed by containing slightly higher solids.

Sampling of treated LAW is performed to confirm that the waste meets the WTP LAW waste process acceptance criteria for subsequent vitrification into glass logs. The need for sampling at the lag storage tanks continues to be evaluated and may be determined to be unnecessary.

Planning for qualification feed tank sampling prior to transfer to the LAWPS is completed before starting any given campaign. Sampling treated LAW is performed in one of three Lag Storage Tanks on a rotating basis. During a campaign, the three Lag Storage Tanks are always in one of three operational conditions; filling awaiting sampling, filled and sampled awaiting transfer authorization, or transferring to WTP LAW for vitrification. Sampling return effluent from the Cesium Product Tank is performed on an as needed basis.

B.8.1 Assessing Process Effluent Sampling and Analysis Results

The process effluent sample and analysis results are assessed against the DST waste acceptance criteria for returns to the DST System. Because effluent returns are derived from DST supernate and have only undergone filtration and ion exchange, corrective actions for DST acceptance criteria exceedances would be limited to pH and sodium nitrite adjustments for corrosion controls.

B.9 Low Activity Waste Pretreatment System Waste Acceptance Criteria

Waste acceptance criteria for the LAWPS have been established from regulatory requirements, existing tank waste sample analyses data, engineering design specifications, and WTP LAW acceptance criteria. Process acceptance criteria are maximum values of a waste analyte that, if exceeded, alerts the operator that management of the waste requires further attention. The rationale for selecting a given analyte for inclusion in this WAP, as required by WAC 173-303-300, is determined in this section for each test and/or analyte.

Figure B.1. LAWPS Waste Acceptance Process

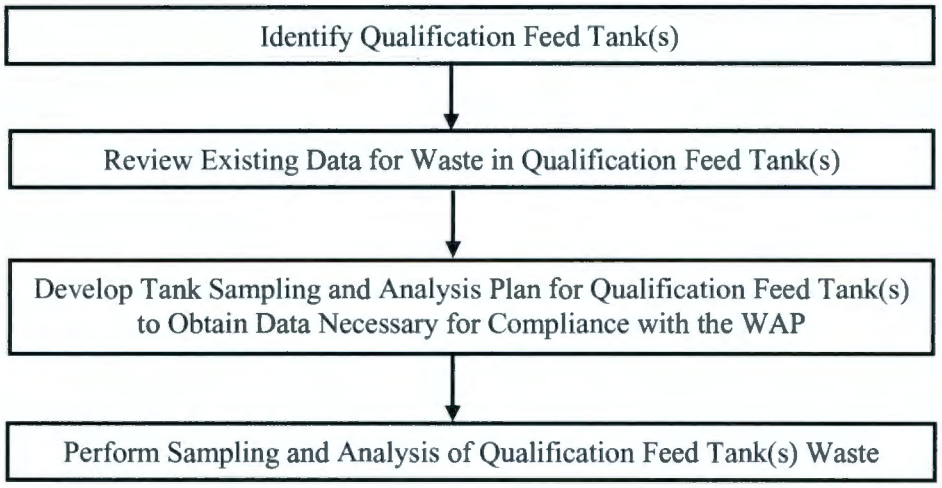

B.9.1 Qualification Feed Tank Waste Acceptance Criteria

The following sections discuss waste acceptance criteria for qualification feed tanks to be processed in the LAWPS.

B.9.1.1 Compatibility

WAC 173-303-640(10) and WAC 173-303-395(1) requires waste handling be conducted to prevent an uncontrolled reaction that could damage the LAWPS tank system structural integrity or threaten human health or the environment. To verify there will be no adverse effects because of mixing the contents of different qualification feed tanks in the DST primary feed tank AP-107 and the LAWPS tank system, a

compatibility evaluation is performed on waste in the qualification feed tanks. As samples from each of the qualification feed tanks are mixed, observations are made to note any changes in color, temperature, clarity, or other visually determinable characteristic. This would indicate an unexpected chemical reaction that might have an impact on LAWPS operations. If such visible changes were observed when mixing samples, the waste would not be processed in the LAWPS without further technical evaluation.

B.9.1.2 Separable Organics

The waste surface layer sample collected from each qualification feed tank or combined feed in AP-107 is visually inspected to determine whether separable organics are present in the waste that requires the waste feed to be rejected or accepted for processing. If necessary, testing of the sample can be performed by either percent water to determine if the whole sample is organic and cannot be discerned visibly or by total carbon/total inorganic carbon. Results of the visual inspection and testing (if any) are used together to determine if the waste can be accepted at the LAWPS for processing. If there is a separate visible organic layer in the qualification feed tank samples then the waste transfer to LAWPS must incorporate engineering controls to eliminate (exclude) the organic layer during the transfer. Engineering controls could include actions such as blending and mixing.

B.9.1.3 Organic Constituents

Because treated LAW generated at the LAWPS is transferred to the WTP LAW for vitrification, the LAWPS will not accept waste for treatment whose data review does not allow treatment and storage in WTP LAW. Certain DST waste could contain trace quantities of chemicals that could cause degradation of the WTP LAW treatment system if found to exceed specifications or inhibit the proper formation of glass during the vitrification process. To predict the concentrations expected in the treated LAW, the qualification feed tank waste is sampled and analyzed for organics and the results are then used to predict the concentrations in the campaign specific treated LAW. The level of volatile organics in the feed is limited to ensure organic constituents that transfer to the treated LAW are compatible with the WTP LAW waste acceptance criteria.

B.9.2 Qualification Feed Tank Parameters

The following table establishes qualification feed tank analyte parameters. Sample analysis results in excess of the action values requires additional assessment in accordance with Section B.7.3.

Table B.2. Qualification Feed Tank Waste Analysis Parameters

Chemical Abstract Service #	Analyte	LAWPS Feed Values
N/A	Bulk Density / Slurry Density [ρ]	< 1.35 g/ml
N/A	Separable Organics	No visible immiscible layer, or in-situ probe
N/A	Hydrogen Generation Rate	< 8.5E-07 g-mol H2/L/hr @140 °F
7439-97-6	Hg	< 1.4 E-05 mole / Na mole
7664-41-7	NH_3 (Ammonia)	< 0.04 M
14808-79-8	SO_4 (Sulfate)	< 7.0E-02 mole / Na mole
10045-97-3	^{137}Cs	< 0.5 Ci/L
10098-97-2	^{90}Sr	< 1.19E-03 Ci / Na mole
14133-76-7	^{99}Tc	< 4.8E-04 Ci/L
13968-55-3	^{233}U	< 1.6E-07 Ci/L
15117-96-1	^{235}U	< 1.7E-09 Ci/L
N/A	$U_{Fissile}$ to U_{Total} Ratio	< 0.96 wt%

Table B.2. Qualification Feed Tank Waste Analysis Parameters

Chemical Abstract Service #	Analyte	LAWPS Feed Values
15117-48-3 14119-32-5	$^{239+240}Pu$	< 3.0E-05 Ci/L
N/A	TRU *	< 1.30 E-05 Ci / Na mole
N/A	Total Organic Carbon (*TOC*) [WTP permit, C-2a(1), C-2a(2), and Table 3A-3]	< 10 wt % < 0.5 mole / Na mole
N/A	Temperature Change (Waste Feed Compatibility)	+/- 20°C
N/A	Maximum Solids C_{wt} (wt%)	< 0.8 wt% at the start of processing an AP-107 macro batch; < 3.3 wt% at the end of a macro batch
N/A	Viscosity (at 25°C)	≤ 15 cP
N/A	Rheological Properties	No non-Newtonian feeds
N/A	Feed Temperature	< 45 °C / 113 °F (in-tank)
16887-00-6	Cl	< 3.7E-02 mole / Na mole
7440-47-3	Cr	< 6.9 E-03 mole / Na mole
16984-48-8	F	< 9.1E-02 mole / Na mole
14265-44-2	PO_4 (Phosphate)	< 3.8 E-02 mole / Na mole
N/A	Cs^{137} to Cs_{total} ratio	< 0.24
N/A	Waste Feed pH	≥ 12
N/A	Polychlorinated Biphenyls (PCBs) [WTP permit, C-2a(1) and C-2a(2)]	< 50 ppm
7429-90-5	Al	< 0.25 mole / Na mole
7440-39-3	Ba	<1.0 E-04 mole / Na mole
7440-70-2	Ca	< 4.0 E-02 mole / Na mole
7440-73-9	Cd	< 4.0 E-03 mole / Na mole
7440-09-7	K	< 0.35 M
7439-91-0	La	< 8.3 E-05 mole / Na mole
7440-23-5	Na Molarity	≤ 6 M and ≥ 5 M
7440-02-0	Ni	< 3.0 E-03 mole / Na mole
14797-65-0	NO_2^- (Nitrite)	< 0.38 mole / Na mole
14797-55-8	NO_3^- (Nitrate)	< 0.80 mole / Na mole
7439-92-1	Pb	< 6.8 E-04 mole / Na mole
3812-32-6	TIC (CO_3^-)	< 3.0E-01 mole / Na mole
7440-61-1	U	< 1.2 E-03 mole / Na mole
10198-40-0	^{60}Co	< 1.1E-06 Ci/L
15585-10-1	^{154}Eu	< 1.8E-05 Ci/L

*The TRU isotopes of concern are: ^{237}Np, ^{238}Pu, $^{239/240}Pu$, ^{242}Pu, ^{241}Am, ^{243}Am, ^{242}Cm, $^{243+244}Cm$.

Note: Radionuclides are not subject to dangerous waste regulation and are included for information only.

The waste analyte parameters for treated LAW are established in the *Integrated DFLAW Feed Qualification Data Quality Objectives*, RPP-RPT-59494 (as amended) and WTP Permit Chapter 3.0, *Waste Analysis Plan*. Table B.3 lists the analytes and action limits. These parameters provide verification that treated LAW can be processed in WTP LAW.

Table B.3. Treated LAW Waste Analysis Parameters

Feed Constituent	WTP LAW Feed Values
Maximum Solids (wt%)	< 3.4 wt%
^{137}Cs	< 3.18 E-05 Ci/mol Na
TRU*	< 1.30 E-05 Ci/mol Na
Total Organic Carbon (TOC)	< 10 wt%
Waste Feed pH	≥ 12

*The TRU isotopes of concern are: ^{237}Np, ^{238}Pu, $^{239/240}Pu$, ^{242}Pu, ^{241}Am, ^{243}Am, ^{242}Cm, $^{243+244}Cm$.

Note: Radionuclides are not subject to dangerous waste regulation and are included for information only.

B.9.2.1 Qualification Feed Tank Sampling Quality Assurance and Quality Control

For each qualification feed tank waste sample, a sample solution is drawn from the sample riser using one or more sample bottles. Sample bottles are pre-cleaned, glass bottles sealed with Teflon™[1] caps or septum caps. The exceptions to the sample bottle requirements are: a clear bottle is used for the surface sample to determine the existence of separable organics and the bottle for Volatile Organic Aromatic (VOA) analysis must be sealed with a septum cap.

For qualification feed tank sampling quality control, one field blank, consisting of one or more sample bottles, is taken during the sample event. Field blanks are inserted at least 1-foot (0.3-meter) into the headspace through the sample riser used during the sample event. One trip blank, also consisting of one or more sample bottles, is taken during each sample event. Trip blanks are analyzed as independent samples for VOA. Field and trip blanks use the same type of sample bottles as the actual samples and are filled with reagent-grade water before shipment to the field.

Preservatives are not used with qualification feed tank samples because of concerns with high radiation exposure that would result from additional handling of sample solutions. It is not practical to refrigerate the bulky, shielded sample pigs and shipping containers. Biological activity, generally the largest problem in environmental samples, is unlikely in qualification feed tank samples because of the high salt content, pH, and radioactivity of the sample.

For a treated feed tank, sampling quality control requirements are the same as the staged feed tank except a trip blank is not required because volatile organic analysis is not performed on these samples. If sampling is performed using a sample loop, content of the field blank is exposed to the sampling environment and not the tank headspace.

The chain of custody is documented on a data sheet that includes a unique sample number, date and time sample was taken, custody seal number, and signature of the sampler. When possession of the sample is transferred to other persons, such as the shipper or laboratory, the signature of the relinquisher and receiver are recorded, along with date and time of the transfer. The receiver at the laboratory also documents on the data sheet that the sample seal number is correct and the seal is intact. The chain-of-custody data sheets are included in the operating record.

[1] Teflon is a trademark of E.I. DuPont de Nemours & Company

B.9.2.2 Deviations from Specified Sampling Practices – LAWPS Feed

The WAP requires ASTM E 300 'weighted bottle procedure' for sampling (ASTM E300-03[1]). Due to high radiation fields, some deviations to the standard and test methods have been necessary to safely implement the sampling practices in the field. Test method deviations are documented below and summarized in Table B.4.

Requirement: The sampling apparatus be filled and allowed to drain before drawing the sample.

Deviation: Sampling personnel lowers the sampling apparatus to the specified level and collects the sample. To pour the contents out and resample would encourage the spread of radiological contamination and result in additional whole body and extremity radiation exposure.

Requirement: Bottles and jars may be made of clear or brown glass or polyethylene with necks shaped to receive glass stopper or a screw cap made of metal or plastic material.

Deviation: Sampling personnel uses clear or amber glass with necks shaped to receive rubber stoppers. Glass stoppers were used at one time but resulted in broken sample bottles during the removal of the glass stoppers from the glass bottles.

Requirement: Stopper and label bottles immediately after taking the samples and deliver them to the laboratory.

Deviation: Sampling personnel screws on the bottle cap after the sample has been collected. Because of the alkalinity of the tank waste sample labels will not stay on bottles after samples are collected. Therefore, sample bottles are etched with the sample numbers before the samples are collected. The samples are shipped to the laboratory as soon as resources are available, within three days of sample collection.

Requirement: Select wiping cloths so that lint is not introduced, contaminating the samples.

Deviation: Sampling personnel uses damp cotton towels to wipe down sample bottles after the sample bottles have been capped. The intent is to remove any waste that may have been deposited on the bottle during the sampling event to minimize contamination and personnel exposure.

Requirement: To prevent the loss of the liquid during shipment and to protect against moisture and dust, cover the closure of the glass bottle with plastic caps, which have been swelled in water, wiped dry, placed over the top of the stoppered bottle, and allowed to shrink tightly in place. Screw-top bottles are recommended. The cap should be lined with material inert to the sample. The screw caps should be secured by use of adhesive tape or similar material.

Deviation: Sampling personnel uses screw caps and 4-mil plastic bags. The cap is Teflon-lined which is inert to the sample. The sample bottle is placed inside a plastic bag, which is placed inside a steel pig (or sample pig). The steel pig is placed inside a shipping pig. The screw cap is not secured with adhesive tape. Securing the sample bottle caps with tape would present the laboratory with difficulty of removing the caps remotely (in the hot cell). If the sample leaks from the sample bottle, it is trapped in the plastic bag. The custody seal is placed on the shipping pig per procedure.

Requirement: All sampling apparatus and closures shall be clean, dry, free of contaminants, and constructed of materials that are inert to the product to be sampled.

Deviation: Prior to sampling, sampling equipment such as the sample holder shall be cleaned using a procedure that is consistent with SW-846[2], sampling equipment-cleaning protocol. The bottles with

---

[1] ASTM, 2009, *Standard Practice for Sampling Industrial Chemicals*, ASTM E300-03, American Society for Testing and Materials, West Conshohocken, Pennsylvania, updated periodically.
[2] *Test Methods for Evaluating Solid Waste*, SW-846

screw caps are washed and certified and are not opened until at the time of the sampling event. The bottles are opened when the previous sample is completed so that only one bottle is opened at the time of sampling to insert the rubber stopper from the sample holder. The stopper and bottles are constructed from materials that are inert to the product to be sampled.

Table B.4. Summary of Method Changes

Analytes	Determinative[1]	Preparation[1]	Changes
Metals	SW-846 6010 (ICP-AES) SW-846 6020 (ICP-MS)	SW-846 3010, 3005, 3015, 3050, 3015 (Note: acid digestion methods generally preferred over fusion)	Heat source alternatives (for example, heating block) and solvent selection may be adjusted based on matrix interferences and safe sample handling practices. SW-846 AA methods are considered due to matrix interferences (or the need for lower detection limits) for specific analytes like Silver, Arsenic, or Selenium.
		ASTM D4503-86 (1998) Dissolution of solid waste by fusion	Not an SW-846 method. The modified ASTM method uses potassium hydroxide, which supports a broader analyte list, rather than lithium metaborate. ASTM methods are recognized by EPA as equivalent standards.
Ammonia – NH_3	SM-4500-NH_3	NA	SM-4500-NH3-F (latest addition) is not an SW-846 method, but is considered equivalent by EPA.
	EPA Method 350.3	NA	EPA Method 350.3 (EPA, 1989) is not an SW-846 method.
pH	SW-846 9040/9045	NA	Application of standard pH measurement techniques are considered equivalent by EPA; can be applied to this determination.

[1] Refer to SW-846 latest version for method details or updates to method numbers

B.9.2.3 Treated LAW Sample Collection

Treated LAW samples are taken from one of three Lag Storage Tanks, whichever is awaiting sampling. Grab sampling is performed during the campaign at sampler or other sample port by opening a valve and allowing a small volume of treated LAW to flush valve and line/piping. The required volume of sample is collected into labeled bottles and chain of custody is maintained. Samples of treated LAW are collected in a manner to produce a representative sample. Sample collection is specified in Table B.5.

B.9.2.4 Deviations from Specified Sampling Practices Treated LAW Sampling

Consistent with Section B.9.2.2 and Table B.4, some deviations to the standard are necessary to implement safely the sampling practices in the field. Deviations from sampling protocols of treated LAW at LAWPS are the same as those described in the preceding section.

Table B.5. Qualification Feed Tank and LAWPS Lag Storage Tank Sample Point Selection

Number of Samples	Location of Sample Points
Five samples, no layering is assumed following mixing of the qualification feed and Lag Storage Tank.	Aliquots are drawn from the tank and deposited into the sample bottle in an interative fashion. The five samples are collected a minimum of five minutes apart for each lag storage tank that requires sampling.

*A separable organic layer in the Lag Storage Tanks is unlikely following filtration and ion exchange.

B.10 Analytical Methods and Quality Assurance and Quality Control

This section provides information on the analytical methods and QA/QC for qualification feed tank and treated LAW samples, including discussions concerning laboratory selection and analytical methods.

B.10.1 Laboratory Selection

Because of the nature of the samples, it is anticipated that Qualification Feed Tank and treated LAW waste sample testing will be conducted at the 222-S Laboratory Complex. Other laboratories at the Hanford Facility could be used provided they are equipped to handle such samples and are accredited to perform the required analysis. Laboratory selection depends on availability, analytical needs, accreditation, and the ability of the laboratory to meet Permit and quality assurance requirements.

B.10.2 Analytical Methods

The analytical methods that must be followed for testing Qualification Feed Tanks and Lag Storage Tank are included in Table B.6. Performance-based specifications rather than procedure-based specifications are used for determining the appropriate analytical methods. This allows for necessary adjustments to the methods for Hanford Facility-specific issues; related to high radioactivity of the sample matrix, while ensuring acceptable data quality. Because of the high radioactivity, the analytical method can deviate from those in national standards such as *Test Methods for Evaluating Solid Waste*, SW-846.

B.10.3 Laboratory Quality Assurance and Quality Control

Laboratories and/or subcontracted laboratories performing analyses in support of this WAP are required to have approved and implemented quality assurance (QA) project plan(s). These QA plans have to meet DOE/RL-96-68, *Hanford Analytical Services Quality Assurance Requirements Document* and WTP Quality Assurance applicable requirements as the baseline for laboratory quality systems. Additional standards may be applied where practicable and consistent with contractual or regulatory requirements and as necessary to address unique/specific work activities.

All sampling events are conducted using tank SAPs. Refer to Section B.10.5 for a discussion of SAPs.

At a minimum, one duplicate analysis, one laboratory control sample, and one matrix spike, are required where appropriate for each analytical batch. Other laboratory quality control (QC) is conducted according to the laboratory QA plan. There are no specific QC requirements for "visual observation" of any separable organics layer other than to observe any settled or floating layer in the collected samples. This observation is routinely done for tank waste samples received at Hanford site laboratory

Preferred methods of analysis are EPA SW-846, *Test Methods for Evaluating Solid Waste, Physical/Chemical Methods* (SW-846), or other approved standardized methods as applicable to tank waste matrix and radioactive samples. The most recent revisions of those methods are preferred. The US Environmental Protection Agency encourages the use of performance based measurement systems when performing SW-846 chemical methods used to analyze solid waste. Therefore, performance measures (QC acceptance criteria) established and documented by laboratory statistical process control limits, when available, may be used instead of the administrative limits. The laboratory performs QC analyses at the frequency specified in the reference methods. Where such methods are not available, QC analyses is performed at the frequency specified in the laboratory analytical procedures. QC results exceeding administrative limits, but within the laboratory statistical criteria, are flagged and documented in the data summary and report narrative. Conditions (e.g., quality problems) that do not conform to requirements specified in this WAP or references herein are controlled to prevent inadvertent use. These quality problems are identified, documented, controlled, and reported to prevent reoccurrence. The laboratories initiate corrective action process as applicable to their QA program requirements.

Table B.6. Analytical Methods/Instrumentation and Quality Control Parameters

Constituents	Suggested Method[g]	LCS % Recovery[a]	Spike % Recovery[b]	% RPD (Liquid)
Al, Ba, Ca, Cd, Co, Cr, Cs, K, La, Ni, Pb, Sr, Te, U	ICP/AES[n]	80 – 120%	75 – 125%	≤20%
Hg	CVAA[i]	80 – 120%	75 – 125%	≤20%
Cl, $C_2O_4^{2-}$, F^-, NO_2^-, NO_3^-, PO_4^{3-}	IC[m]	80 – 120%	75 – 125%	≤20%
Free Ammonia	IC	90 – 110%	NA	≤20%
Hydrogen Generation Rate	SCT-M0SRV00028-00-012-01-00012, Appendix D	80 – 120%	NA	≤20%
pH [f]	pH meter	+/- 0.1 pH Units	N/A	N/A
PCB	GC[k]/ECD[j]	70 – 130%	70 – 130% [h]	≤20%
TIC	Persulfate or furnace oxidation	80 – 120%	75 – 125%	≤20%
TOC	Persulfate or furnace oxidation	80 – 120%	75 – 125%	≤20%
Total Solids	Gravimetric	N/A	N/A	≤20%
Bulk Density	Gravimetric	N/A	N/A	≤20%
Specific Gravity (SpG)	Gravimetric	80-120%	NA	≤20%
Separable organic layer (surface sample)	N/A – visual	N/A	N/A	N/A
^{235}U, ^{238}U,	ICP / MS[o] Alpha Counting	80 – 120%	75 – 125%	≤20%
^{232}U, ^{233}U, ^{234}U, ^{236}U	ICP / MS[o] Alpha Counting	N/A[e]	N/A[e]	≤20%
^{60}Co, ^{137}Cs,	GEA[l]	80 – 120%	N/A[d]	≤20%
^{154}Eu	GEA[l]	N/A	N/A[d]	≤20%
^{90}Sr,	Beta counting (GPC)	80 – 120%	N/A[e]	≤20%
^{241}Pu, ^{242}Pu	ICP / MS[o]	80 – 120%	75 – 125%	≤20%
^{99}Tc, ^{241}Pu	Liquid scintillation counting	NP (Not Performed)	75-125%	≤20%
^{238}Pu, ^{242}Pu	Alpha counting	N/A[e]	N/A[c]	≤20%
^{239}Pu, ^{240}Pu	Alpha counting	80 – 120%	N/A[c]	≤20%
^{241}Am	Alpha counting	80 – 120%	N/A[c]	≤20%

Notes:

[a] LCS = Laboratory Control Sample. This sample is carried through the entire analytical method, including the preparation process. The accuracy of a method is usually expressed as the percent recovery of the LCS. The LCS is a matrix with known concentration of constituents processed with each preparation and analyses batch. It is expressed as percent recovery; i.e., the amount measured, divided by the known concentration, times 100.

[b] For some methods, the sample accuracy is expressed as the percent recovery of a matrix spike sample. It is expressed as percent recovery; i.e., the amount measured, less the amount in the sample, divided by the spike added, times 100. One matrix spike is performed per analytical batch. Samples are batched with similar matrices. For other constituents, the accuracy is determined based on use of serial dilutions.

(c) Matrix spike analyses are not required for this method because a carrier or tracer is used to correct for constituent loss during sample preparation and analysis. The result generated using the carrier or tracer accounts for any inaccuracy of the method on the matrix. The reported results reflect this correction.

(d) The measurement is a direct reading of the energy and the analysis is not affected by the sample matrix; therefore, a matrix spike is not required.

(e) No standards are run for these constituents.

(f) The pH of solids is determined according to SW-846 method 9045. This method uses a 1:1 mix of solids with water and then the pH is measured.

(g) If the laboratory believes an approved method other than the one listed here would provide a better analysis, that method should be used.

(h) Control charts should be applied to the recoveries associated with these analyses in the high-level waste matrices as appropriate. The SW-846 Method 8270C acknowledges poor recoveries of phenols and other semi volatiles, and recommends expanding the recovery limits to approximately D-175 % for many of these analytes (D- applies to any result detected above the instrument detection limit or minimum concentration limit).

(i) CVAA = Cold Vapor Atomic Absorption

(j) ECD = Electron Capture Detection

(k) GC = Gas Chromatography

(l) GEA = Gamma Energy Analysis

(m) IC = Ion Chromatography

(n) ICP/AES = Inductively Coupled Plasma/Atomic Emission Spectroscopy

(o) ICP/MS = Inductively Coupled Plasma/Mass Spectroscopy

B.10.4 Data Evaluation

An initial data review is performed by the laboratory in accordance with the laboratory Quality Assurance Project Plan. Data rejected because of major errors are discarded and reanalysis performed. Minor anomalies found during the data review are included in the data report with appropriate qualifiers.

The reported data are reviewed further by the data users (TOC/WTP personnel). This review focuses on data completeness, sample integrity prior to analysis, quality of analysis, and consistency with process knowledge. The review include but is not limited to the following checks:

- Verify all required analyses were performed.
- Verify unbroken chain-of-custody from sampling through analysis.
- Verify analyses were performed within the required holding times.
- Review field and trip blank results to verify samples were not compromised by contamination.
- Verify sample results meet the specified Required Detection Limits.
- Verify laboratory QC results (e.g., laboratory control sample, matrix spike, blank, duplicate) are within the acceptance criteria
- When applicable process knowledge estimates (e.g., the Best-Basis Inventory) are available, compare sample results to process knowledge estimates to check for potential bias.

Usability of data not meeting requirements or criteria is evaluated on a case-by-case basis. This evaluation is based on the actual quality of the data in question and the impact of using such data.

B.10.5 Sampling Analysis Plan

A SAP will be developed to provide clear directions to the sampling organization and the laboratory for sample collection and analysis in support of decision to transfer and accept the staged feed. Information in the SAP will be organized in a manner that make it easier for these organizations to review the requirements and perform the work. The SAP may include the following information, as appropriate:

- Sample locations (e.g., riser and depths for the staged feed tank), sample quantity, and sample handling.

- If an additional sample is required to check for separable organics, that sample is only used for this test.
- Sample integrity requirements (e.g., sample labeling, chain-of custody, special sample handling, holding times).
- Information for shipping radioactive samples.
- Requirements for receiving and initial handling of the samples by the laboratory.
- Subsampling and/or compositing in the laboratory for analyses
- Suggested analytical methods for analysis
- Data reporting requirements
- Change control requirements

A SAP is prepared for each staged or treated feed tank based on TOC procedure requirements. For efficiency purpose, the following approach may be used to develop the SAPs. A standing SAP is prepared for each staged feed tank. The standing SAP contains requirements that do not change from campaign to campaign or batch to batch (e.g., analyses, QA/QC, data reporting requirements). The requirements that change with each campaign or batch (e.g., sample identification numbers, sample locations) will be developed as needed and implemented accordingly. As SAPs are completed, they will be maintained in the LAWPS Facility Operating Record.

This page intentionally left blank.

ADDENDUM C
PROCESS INFORMATION

This page intentionally left blank.

ADDENDUM C
PROCESS INFORMATION

CONTENTS

C. PROCESS INFORMATION C.1

C.1 Low Activity Waste Pretreatment Process Description C.1
C.1.1 241-AP-107 Feed and Transfer Including Slurry Returns from LAWPS C.5
C.1.2 Filter Feed Tank (FFT) C.5
C.1.3 Cross Flow Filtration C.5
C.1.4 Ion Exchange and Resin Regeneration C.7
C.1.5 Resin Replacement and Disposition C.9
C.1.6 Resin Management and De-watering Equipment C.11
C.1.7 Cesium Product Tank Returns C.11
C.1.8 Water and Chemical Additions C.12
C.1.9 Treated LAW Storage and Transfer C.12
C.1.10 Process Building and Vault/Process Vessel Ventilation Systems C.14
C.1.11 DST to LAWPS Transfer Piping C.14
C.1.12 LAWPS to WTP Transfer Piping C.14
C.1.13 Enclosure and Vault Layout C.17
C.1.14 Lag Storage Tanks Vault C.17
C.1.15 Process Vaults C.17
C.1.16 Process Building C.20
C.1.17 Utilities and Balance of Plant C.21
C.1.18 Instrumentation and Control C.21
C.1.19 Fire Suppression and Fire Alarm C.21

C.2 Containers C.22

C.3 Tank Systems C.22
C.3.1 Design Requirements C.23
C.3.2 Additional Requirements for New Tanks C.27
C.3.3 Secondary Containment and Leak Detection C.27
C.3.4 Tank Management Practices C.32
C.3.5 Labels or Signs C.33
C.3.6 Management of Ignitable or Reactive Wastes in Tanks Systems C.33
C.3.7 Management of Incompatible Wastes in Tanks Systems C.34

C.4 Organic Air Emissions Control C.34
C.4.1 Applicability of Subpart CC Standards C.34

C.5 Engineering Design Media C.34

FIGURES

Figure C.1. LAWPS Site Plan C.2
Figure C.2. Process Flow Diagram C.4
Figure C.3. Cross Flow Filtration C.6
Figure C.4. Cross Flow Filter Element C.6
Figure C.5. Filter Feed Tank Layout C.7
Figure C.6. Spent Resin Handling Area Layout C.10
Figure C.7. HIC Cask and Trailer C.11
Figure C.8. Treated Waste Delay Tank C.13
Figure C.9. Transfer Piping Interface Points C.16
Figure C.10. LAWPS Process Area Layout C.18
Figure C.11. Typical LAWPS Vault and Valve Pit Design Features C.19
Figure C.12. Example LAWPS Pit Cover Plate Seal C.20
Figure C.13. Typical LAWPS Valve Pit Design Features C.20
Figure C.14. LAWPS Process Tanks Layout C.23

TABLES

Table C.1. Total Tank Size (including headspace, as applicable) C.23
Table C.2. LAWPS Tank System Information C.24
Table C.3. Codes and Standards for Tanks and Ancillary Systems C.25
Table C.4. Ancillary Equipment and Material Data C.26
Table C.5. Codes and Standards for Structural Systems C.28
Table C.6. Locations with Secondary Containment Coatings C.29

C. PROCESS INFORMATION

This addendum provides a detailed discussion of the Low Activity Waste Pretreatment System (LAWPS) processes and equipment. The LAWPS comprises a low activity liquid waste tank storage and treatment system located in the 200 East Area of the Hanford site. The facility is situated approximately 1,500 feet (457 meters) northeast of the 241-AP Tank Farm. The layout of the LAWPS facility is shown on a simplified site plan in Figure C.1.

The low activity waste treated in LAWPS consists of aqueous phase supernatant liquids transferred from the DST 241-AP Tank Farm for treatment prior to transfer to the Waste Treatment and Immobilization Plant (WTP) Low Activity Waste (LAW) facility for vitrification. The LAWPS waste processing is controlled in a Central Control Room located at 274-AW, which is staffed continuously during LAWPS processing operations. In the event of emergency or upset condition, LAWPS can be controlled at the Electrical Equipment Center (EEC). Processing operations are defined as when liquid transfers [Note 1] of any sort are occurring to/from/within the LAWPS, including treatment within the facility. Examples of processing operations include, but are not limited to, when liquid waste is transferred from DST Tank 241-AP-107 to LAWPS during active waste treatment/processing at the LAWPS, treated effluent feed from LAWPS to WTP LAW, and effluent returns (i.e., cesium eluate) back to the DST System. Section C.1.17.1, describes the centralized control system (i.e., monitoring and control system or MCS) that is located at the Central Control Room. The MCS monitors the performance of the LAWPS operations and records alarms from various equipment as described in this addendum and Addendum I, Inspection Plan. When LAWPS processing operations are not occurring, the Central Control Room is not required to be staffed continuously by LAWPS qualified personnel, and alarms are monitored remotely on a daily basis as specified in Addendum I, Inspection Plan.

Note 1: Liquid transfers do not include standard facility operations of water recirculation (e.g., for pump seals), sanitary water and cooling water, and outdoor rainwater management activities.

C.1 Low Activity Waste Pretreatment Process Description

The LAWPS process is illustrated in Figure C.2. Tank waste supernatant is transferred from DST tank 241-AP-107 to the Filter Feed Tank (FFT) where a portion is filtered through the Cross Flow Filtration system (CFF) with the remainder containing filtered solids circulating back to the FFT. The filtered portion is next treated in two Ion Exchange (IX) columns in series to remove cesium. The treated Low-Activity Waste (LAW) is then transferred to the Treated Waste Delay Tank (TWDT) prior to subsequent transfer to one of three lag storage tanks. The TWDT provides a temporary hold-up to allow the treated waste to be monitored for high cesium prior to reaching the lag storage tanks. If necessary, waste in the TWDT can either be diverted to the Cesium Product Tank, away from lag storage, upon detection of high cesium, or the waste can be rerouted back to the filter feed tank for further filtration and ion exchange. A process control plan and operating procedures will determine the route chosen. Treated LAW waste transferred to the lag storage tanks is sampled for confirmation that waste meets process acceptance prior to transfer to WTP LAW.

The following is a summary of the LAWPS unit operations contained in this section.

- **241-AP-107 Feed and Transfer to the Filter Feed Tank (Sections C.1.1 and C.1.2):** Feed for the LAWPS is transferred from DST tank 241-AP-107 through a transfer line to the LAWPS FFT. A return line from the FFT also transfers a recirculated waste stream back to the tank farm (241-AP-107) that typically displays higher solids.

- **Cross Flow Filtration (Section C.1.3):** LAWPS feed initial treatment occurs by pumping it from the FFT through a CFF loop, and returning the majority of the effluent with solids back to the FFT. The CFFs allow a portion of the liquid waste stream with dissolved cesium to pass through the dual filters. The function of the CFFs is to remove the un-dissolved solids from the waste stream in preparation for treatment through the downstream IX columns.

Figure C.1. LAWPS Site Plan

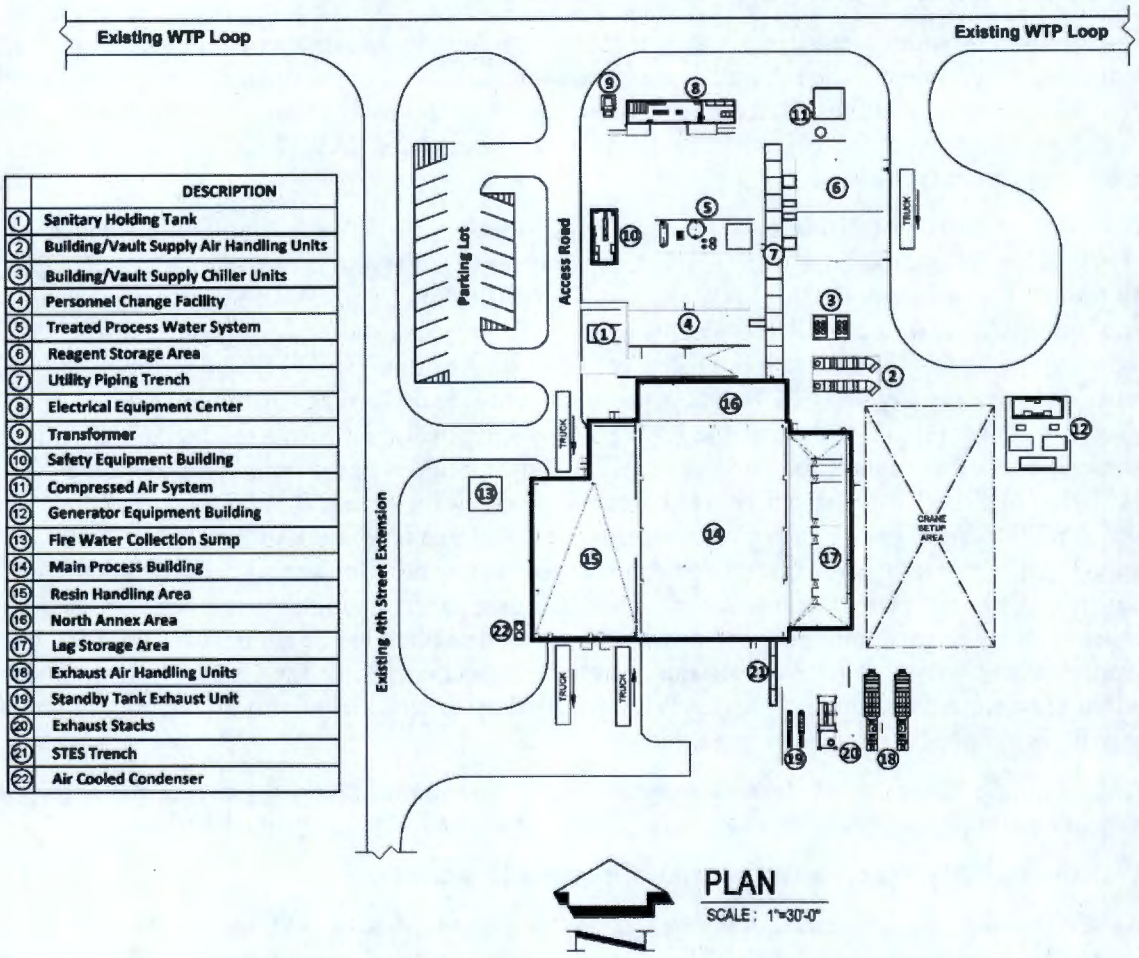

	DESCRIPTION
1	Sanitary Holding Tank
2	Building/Vault Supply Air Handling Units
3	Building/Vault Supply Chiller Units
4	Personnel Change Facility
5	Treated Process Water System
6	Reagent Storage Area
7	Utility Piping Trench
8	Electrical Equipment Center
9	Transformer
10	Safety Equipment Building
11	Compressed Air System
12	Generator Equipment Building
13	Fire Water Collection Sump
14	Main Process Building
15	Resin Handling Area
16	North Annex Area
17	Lag Storage Area
18	Exhaust Air Handling Units
19	Standby Tank Exhaust Unit
20	Exhaust Stacks
21	STES Trench
22	Air Cooled Condenser

- **Ion Exchange & Resin Regeneration (Section C.1.4):** The filtered LAWPS feed is next passed through two IX columns (lead and lag columns). The lead column removes the bulk of the cesium by adsorbing it onto Spherical Resorcinol-Formaldehyde (sRF) resin designed to selectively remove Cesium from high pH waste. High pH of the waste is the result of carbon steel corrosion protection requirements in the DST system. Cesium removal continues until it is determined that the maximum level of loading on the resin has been reached (time/monitors). After the IX columns are loaded, cesium will be eluted (removed) from the resin via dilute nitric acid. Following elution, the resin is regenerated with dilute caustic to prepare the resin for further processing and cesium removal.

- **IX Eluate Neutralization and Preparation for Return to DSTs (Section C.1.4.2):** The effluent from the elution/regeneration process, containing concentrated cesium, is routed to the Cesium Product Tank. Note: The term Cesium "Product" Tank originated during conceptual design and should not be misunderstood to imply that the tank contains a product. The cesium elution stream is a mixed waste. This tank also receives drainage from all of the radioactive process areas in the facility. The Cesium Product Tank is chemically adjusted (as needed to ensure that the pH and corrosion inhibitors are appropriate for storage in DSTs) and contents are transferred back to the tank farms.

- **Resin Replacement & Disposition (Section C.1.5):** The IX resin is regenerated after each elution cycle. After approximately 20 to 30 regeneration cycles, the period of operation between regeneration is too short, making the resin ineffective. At that point, the resin is considered spent

and is removed and replaced with fresh resin. The spent resin is removed from the IX columns as a slurry and hydraulically transferred into a High Integrity Container (HIC). Residual water is removed from the resin located in the HIC and returned to the cesium product tank. New resin is added from containers and gravity fed into the columns where it is conditioned by treatment with dilute caustic (NaOH) solution. Screens in the IX column allow excess water to be removed from the fresh resin, which also is transferred into the cesium product tank for eventual return to the tank farms.

- **Water and Chemical Addition (Section C.1.8):** The reagents necessary to support the resin management and regeneration processes include Sodium Hydroxide (NaOH), Nitric Acid (HNO_3), and Sodium Nitrite ($NaNO_2$), a corrosion inhibitor for returns to the DST System. These chemicals (with the exception of NaNO2) are prepared and held in the Reagent Storage Area, from where they are fed directly to the process as required. NaNO2 is stored and introduced into the system from the Fresh Resin Handling Area.

- **Treated LAW Storage and Transfer (Section C.1.9):** The pre-treated waste stream that passes through the IX columns is retained for a short time in the TWDT, and then is directed to one of three lag tanks for storage and sampling. The TWDT includes a baffled chamber and is sized to provide approximately 100 minutes of holdup allowing the metastable barium (^{137}Ba-m) to decay so that gamma measurements can be made to ensure processing goals for cesium removal have been reached and the waste in the lag storage tanks is sampled for process acceptance. After sampling in the lag storage tanks to verify acceptance, the waste is transferred in batches to WTP LAW for vitrification within an encased (pipe-in-pipe) transfer line. Should samples determine the treated LAW is off-specification, the waste can either be re-routed to the FFT for additional treatment or returned to tank farms via the Cesium Product Tank.

- **Process Building Ventilation and Process Vessel Ventilation Systems (Section C.1.10):** The LAWPS facility includes two HVAC systems. The primary Building and Vault Ventilation (BVV) system provides ventilation in a cascading manner for the process building and below-grade vault and valve/pump pits. The primary purpose of this system is to provide HEPA filtered confinement ventilation for the building and vaults. Airflow direction through the building and vaults are maintained from areas, which are least likely to be contaminated to areas with a higher probability of contamination. The second Process Vessel Ventilation (PVV) system is routed through the BVV during normal operation, but is independent and provides standby on-demand ventilation for the process tank headspaces in the event hydrogen is detected at or above 25 percent (%) of the lower flammability limit (LFL). The purpose of this system is to prevent the concentration of flammable gases (i.e., hydrogen generation from radiolysis) from reaching 25% of the LFL within the process tanks and IX columns during a shut-down condition. The system will also provide HEPA filtered confinement ventilation in this configuration.

- **LAWPS to WTP LAW Transfer (Section C.1.12):** After sampling at the lag storage tanks and process acceptance approval, the treated LAW is transferred via encased (pipe-in-pipe) transfer lines to WTP LAW.

- **Utilities and Balance of Plant (Section C.1.17):** The Utilities and Balance of Plant (BOP) consists of ancillary equipment and systems that support LAWPS process operations. These systems include water treatment and storage infrastructure to provide water to the process both for chemical makeup and for flushing and decontamination efforts; compressed air for plant use; reagent storage and feed; power supply, etc. The BOP also includes equipment necessary to support operations (30-ton [27-metric ton] crane servicing the main process area, 5 ton [4.5-metric ton] crane servicing the Spent Resin Handling Area, septic tank, cooling skid, electrical equipment, telecommunications, etc.).

1

Figure C.2. Process Flow Diagram

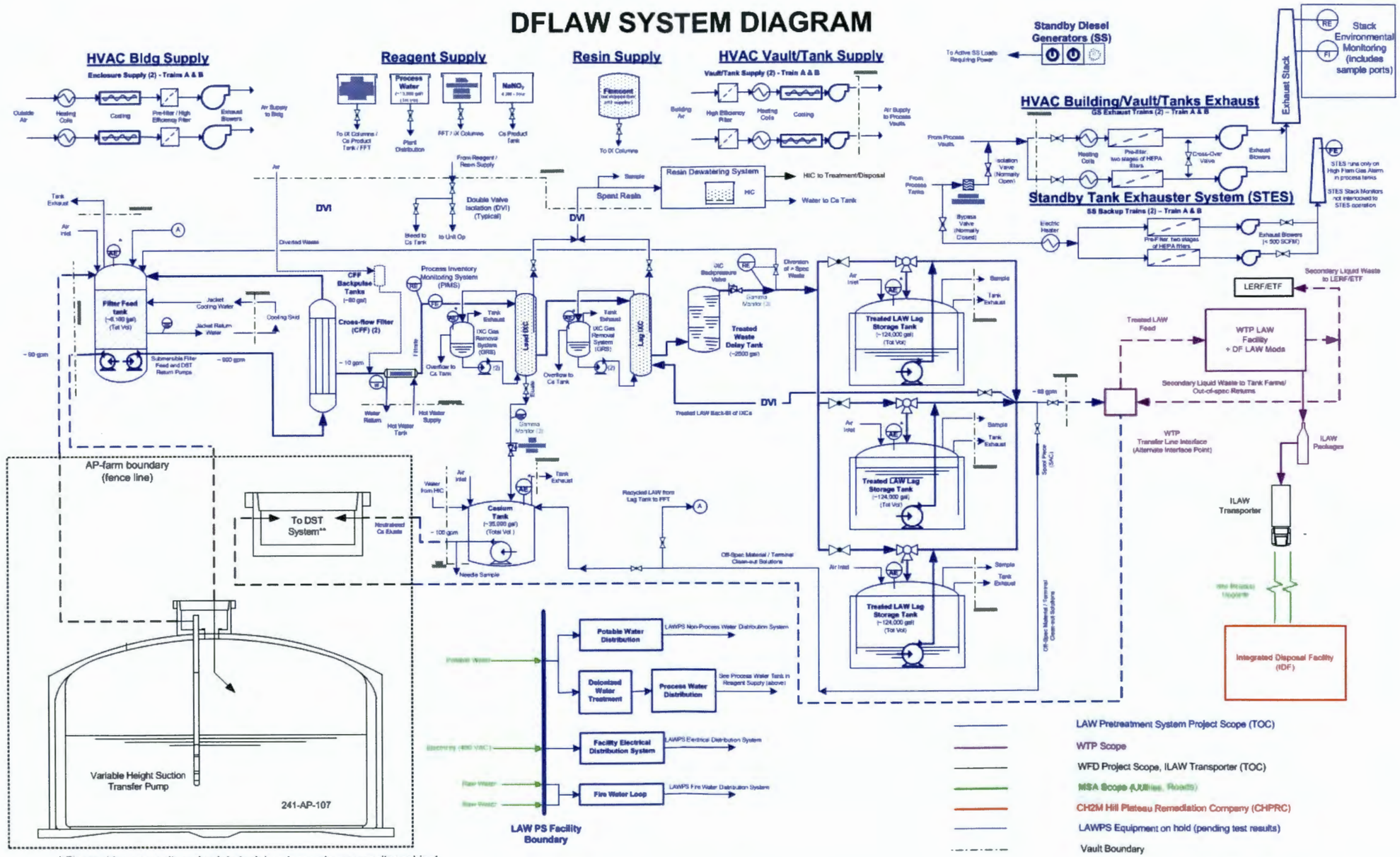

* Flammable gas monitors circulate tank headspace to gas monitor cabinet
** AP-05A Pump Pit used as termination point for returns for cost estimating purposes (worst case, per TFP Eng.)

2
3

C.1.1 241-AP-107 Feed and Transfer Including Slurry Returns from LAWPS

The LAWPS process receives feed from the DST tank 241-AP-107. Supernatant will be transferred to LAWPS through a dedicated encased (pipe-in-pipe) waste transfer line at a flow rate of approximately 90 gallons (340 liters) per minute. The supernatant will be received into the FFT and then fed through the CFFs at a flow rate of approximately 900 gallons (3460 liters) per minute. The waste stream that is not filtered through the sintered metal tubes of the filter, is continuously returned to the FFT. A portion of the waste not filtered is recycled back to the DST system via a dedicated transfer pump and encased (pipe-in-pipe) transfer line.

The FFT feed line, the FFT return line, and the Cs product tank return line represent the process interfaces between LAWPS and the 241-AP Tank Farm. The physical interface control point is at the boundary (fence line) of the AP Tank Farm. IX eluate in the Cs product tank will be neutralized and returned to the DST tank farm in accordance with DST waste acceptance criteria. The waste transfer lines between LAWPS and the AP Tank Farm boundary are shown on Figure C.9.

C.1.2 Filter Feed Tank (FFT)

The FFT receives direct feed from the 241-AP Tank Farm and contains two submersible pumps. One circulates the feed stream through the CFF filtration loop, while the second recycles unfiltered waste with elevated solids back to the Tank Farm. Because high flow rates are used in the CFF loop (approximately 900 gallons [3460 liters] per minute), the FFT operations generate heat. As a heat mitigation design feature, the tank includes a cooling jacket and non-contact cooling water loop that continually removes heat from the vessel during pumping operations.

The FFT is located in the FFT vault with the layout shown in Figure C.5. During process operations, the FFT is continuously fed DST waste from 241-AP-107. As DST waste concentrates in the filter loop by the CFFs, it is continuously transferred back to 241-AP-107 using the DST Return Pump located on a FFT riser. The transfer rate of DST waste back to 241-AP-107 is less than the rate supplied by the LAWPS feed pump by the rate of the filtrate passing through the CFFs.

C.1.3 Cross Flow Filtration

Cross flow filtration is used for filtering undissolved solids from the tank waste feed stream delivered to LAWPS. The size and surface area of the CFFs are based on a determination of the membrane area required to produce the required filtrate flow rate to meet the throughput requirements for the LAWPS and subsequent feed rate to the WTP LAW facility.

CFF, also known as tangential (parallel) flow filtration, is a process whereby product flow (feed) is directed tangentially along the surface of a membrane, with most of the solution circulated back to the feed tank. The filtrate (or permeate) flows through the membrane at right angles to the direction of feed flow (reference Figure C.3). The rapid flow of feed solution across the membrane acts to sweep the filter surface, reducing solids accumulation on the membrane surface. It also prevents fouling that can plug the pores at the membrane surface. The driving force for filtrate flow is the trans-membrane pressure. The transmembrane pressure is a pressure differential that is changed by adjusting the backpressure on the filtrate line (shell side) with respect to the pressure in the filter feed loop (tube side).

Although high-flow velocity through the tubes produces a shear at the inside tube wall that reduces the buildup of a particulate layer, some buildup of solids is expected, so periodic back pulse of the filter and/or chemical cleaning is required to remove these solids and to maintain the filter flux rate. A heat exchanger located immediately downstream of the filters moderates the filtrate temperature to mitigate formation of precipitates in the IX columns.

Figure C.3. Cross Flow Filtration

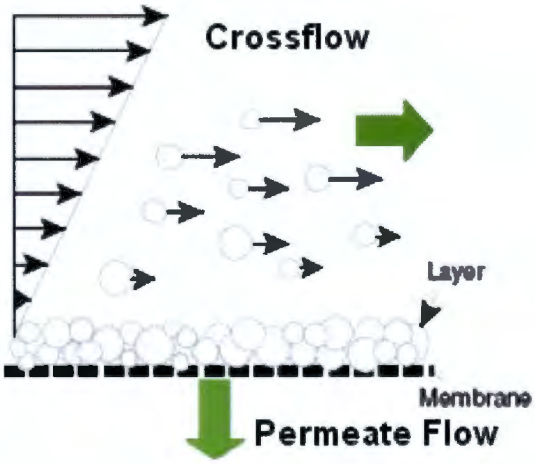

The solids removal efficiency is established to be 99.99 percent of the suspended solids in the feed, which is consistent with the basis used for WTP LAW feed. Removal efficiency is a function of particle size; the 0.1-micron filter media removes 100 percent of particles larger than 1 micron. To maintain the required flow velocity (14.7 feet [4.9 meters] per second), the filtration process uses a feed rate of approximately 900 gallons (3,460 liters) per minute, and requires a filter consisting of 408 tubes, 10 feet (3 meters) long arranged in four sets of 102 tubes in series, for a filter area of 532 feet^2 (162 meters^2). An example of CFF arrangement is shown in Figure C.4.

Figure C.4. Cross Flow Filter Element

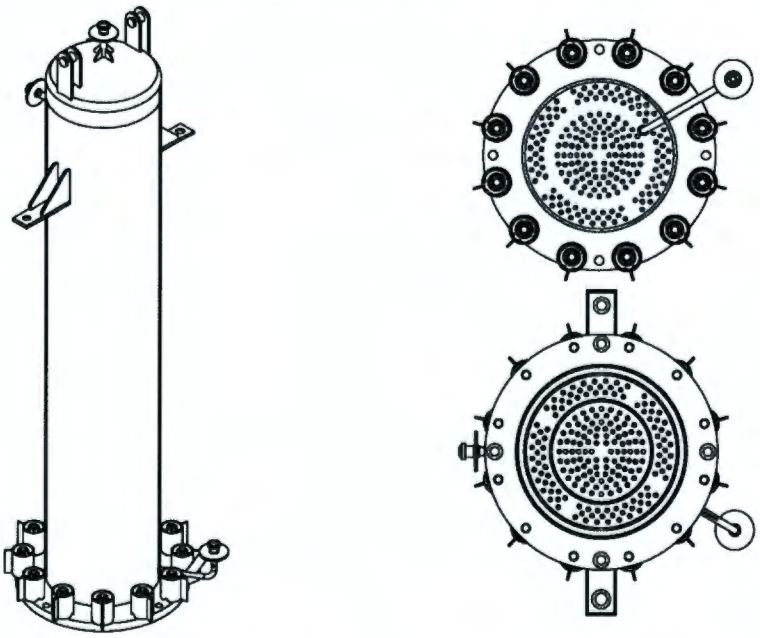

SIMPLIFIED CARTRIDGE ASSEMBLY **SECTION VIEWS**

Figure C.5. Filter Feed Tank Layout

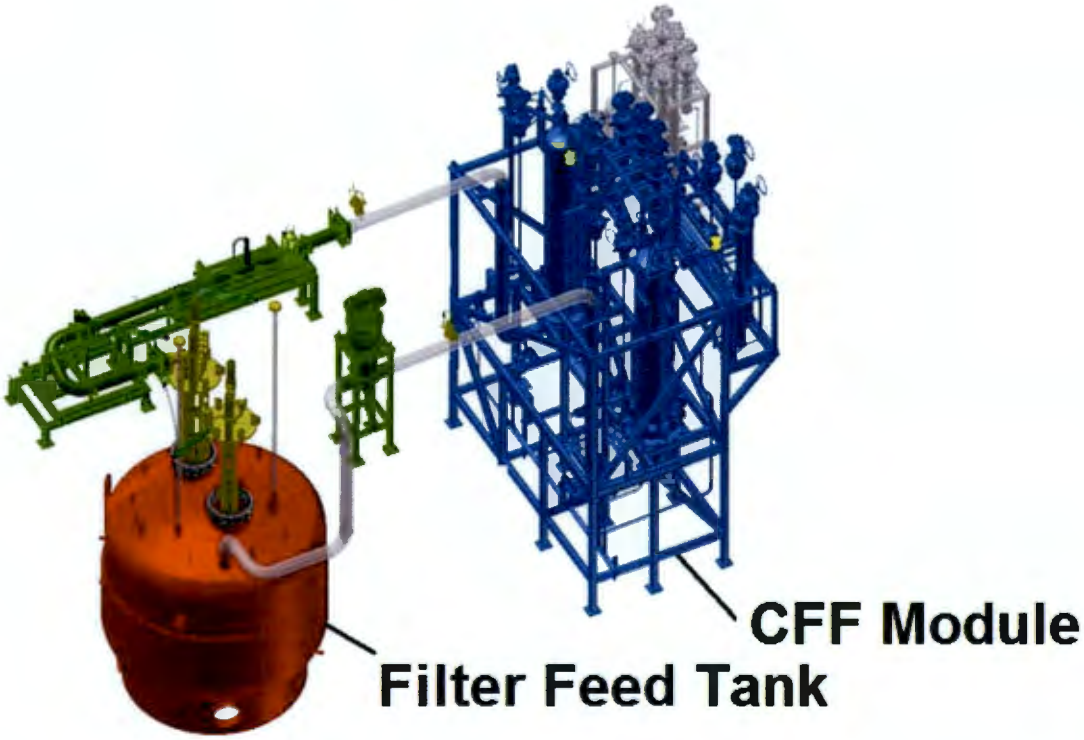

C.1.4 Ion Exchange and Resin Regeneration

The purpose of the ion exchange (IX) columns are to remove ^{137}Cs from filtered waste using elutable sRF resin housed within two fixed position columns. From the CFF, the filtrate flows into two IX columns (lead and lag) in series. The filtrate feeds into the top of the IX columns and exits the bottom of the columns, which is known as down-flow. The lead column is identical in size to the lag column and the system has been designed to provide sufficient flow of treated LAW to produce 30 MT/day of LAW glass at a 20 wt. percent sodium.

The two IX columns have a bed diameter of approximately 3.6 feet (1.1 meter), a bed length of 4.2 feet (1.3 meter); and a volume of 308 gallons (1,166 liters) for a total of 41.2 cubic feet (1.2 cubic meters). The columns have a straight side length of 7 feet (2.1 meters) and a volume of 588 gallons (2,226 liters). The total column height accounts for the resin expansion, the liquid distributor/collector, and allowance for head/tail space.

Each IX column includes a vent as a safety feature designed to mitigate potential build-up of hydrogen during a prolonged loss of flow.

The IX lead and lag columns are located in a common vault. Instrumentation, valves, and removable pipe section associated with the IX columns are located in two IX valve pits, a services valve pit and an IX monitoring pit, which are physically separate from the IX columns. Regular maintenance activities for instrument transmitters, valve motors, and positioners can be conducted above the IX vaults without have to lifting the cover shield blocks from the vaults.

C.1.4.1 Ion Exchange Elution and Regeneration Process

The simplified process cycle for use of sRF elutable resin for the removal of Cs includes loading, elution, rinse, regeneration, and waste re-introduction. Each bed of sRF will be repeatedly loaded with Cs and then eluted until spent. The sRF resin is received in hydrogen form meaning that the IX sites are loaded with hydrogen. Prior to use, the resin is converted to sodium form, meaning that the hydrogen is removed, and replaced with sodium ions. The resin is converted to sodium form by exposing the resin to a NaOH solution. During processing, sodium ions on the IX resin are released to the waste stream and cesium ions are adsorbed in the same location vacated by the sodium ion. Conversion of the resin from hydrogen to sodium form causes the resin beads to swell. During the elution process, waste is displaced from the bed, followed by a water rinse, followed by a dilute acid solution rinse. The acid solution causes the sodium and cesium to be released from the IX resin and be replaced by hydrogen. During processing, the resin is in sodium form and during elution the resin is converted to hydrogen form. Conversion of the resin from sodium to hydrogen form causes the media to shrink. The regeneration process converts the resin from the eluted hydrogen form, back to the sodium form for further processing by passing a NaOH solution through the resin bed in up-flow. Because the resin swells during the final step of regeneration, the last step is performed in up-flow versus the normal down-flow. Additionally the resin bed is relatively short and squat (1:2 height to diameter ratio) to help ensure that the beads have adequate space to expand.

After approximately 20 to 30-load/regenerate cycles, the resin has reached its life expectancy; it is first eluted of Cs and then sluiced from the column into a HIC located in the Spent Resin Handling Area. The final elution cycle prior to resin removal includes use of a greater volume of dilute acid to ensure that as much of the cesium has been removed from the resin as is practical. The final elution prior to the disposal of the sRF resin is performed one column at a time, lag to lead.

The elution process utilizes both sodium hydroxide as well as nitric acid. Currently the two concentrations of sodium hydroxide include 0.1 M and 1.0 M NaOH.

All elution and regeneration streams are directed to the cesium product tank for storage. Tank contents are neutralized; as necessary, and if required, sampled in accordance with DST waste acceptance criteria prior to returning to the 241-AP Tank Farm.

C.1.4.2 IX Eluate Neutralization and Return to DST System

As previously described, the IX eluate is stored in the cesium product tank. In addition, fluids generated from the elution and regeneration steps (displacement, pre-elution rinse, elution, post-elution rinse, and regeneration) are stored in the cesium product tank. This combination of acidic and basic solutions result in the cesium product tank having an inventory that may be incompatible with DST System waste acceptance criteria for pH. As such, the cesium product tank is designed for the addition of adjustment chemicals from the Reagent System. In addition, the process allows for the addition of $NaNO_2$ as a corrosion inhibitor, as required by DST system waste acceptance criteria.

The cesium product tank is also used to hold liquids resulting from off-normal events and infrequent process operations. This could include overflow and leaks from the other process tanks, accumulated liquids from the various vault sumps, cleaning solutions, dewatering fluids, and off-specification solutions.

In the event of a leak from the Cesium Product tank, emergency response actions would be initiated and would include a process shutdown. Refer to Addendum J, Contingency Plan, for additional detail on response actions.

C.1.5 Resin Replacement and Disposition

Once the resin is degraded to the point that the cesium-loading period becomes too short for effective waste processing, the resin in both IX columns is replaced (approximately 2 to 3 times a year). The removal process is described as part of the IX discussion provided in Section C.1.4. The IX columns are eluted (to displace cesium prior to resin replacement). This step is more aggressive than a normal elution cycle to minimize the amount of residual cesium present on the resin. Once eluted, the resin is sluiced out of the IX column with water to a HIC located in the Spent Resin Handling Area.

The cask Upper Impact Limiter and Primary lid bolts are removed manually and the items moved to the designated lay down area using a bridge crane. The HIC lid is then removed using the pneumatic lid tool and positioned at the designated HIC lid storage position. The HIC fill head is lifted with the monorail from its designated storage location and engaged with the HIC. Service line connections are made using flexible hoses and quick disconnects to the Hose Station.

The transfer process begins via remote control from the control console within the adjacent control room. The control console is located at a viewing window for IX resin removal and dewatering process observation. The 308-gallon (1,166-liter) IX resin bed is transferred from the lead IX column through the waste control valve and fill head assembly into the HIC. During resin transfer, the pump skid returns the sluiced water from the HIC to the Cs product tank. Once the predetermined set point is reached in the HIC, the level detection system closes the inlet on the waste control valve to prevent overfilling the HIC. The pump skid continues to bulk dewater reducing the liquid volume such that the Lag IX column spent resin can also be loaded into the HIC. On completion of bulk water removal, a secondary spent IX resin-dewatering process is implemented to remove up to > 99 percent of free liquids. The verification tank is located in the spent resin handling area and measures the quantity of free liquids pumped from the HIC after dewatering has been completed to achieve shipping requirements and the disposal site Waste Acceptance Criteria. A plan view of the Resin Handling Area is provided in Figure C.6.

Figure C.6. Spent Resin Handling Area Layout

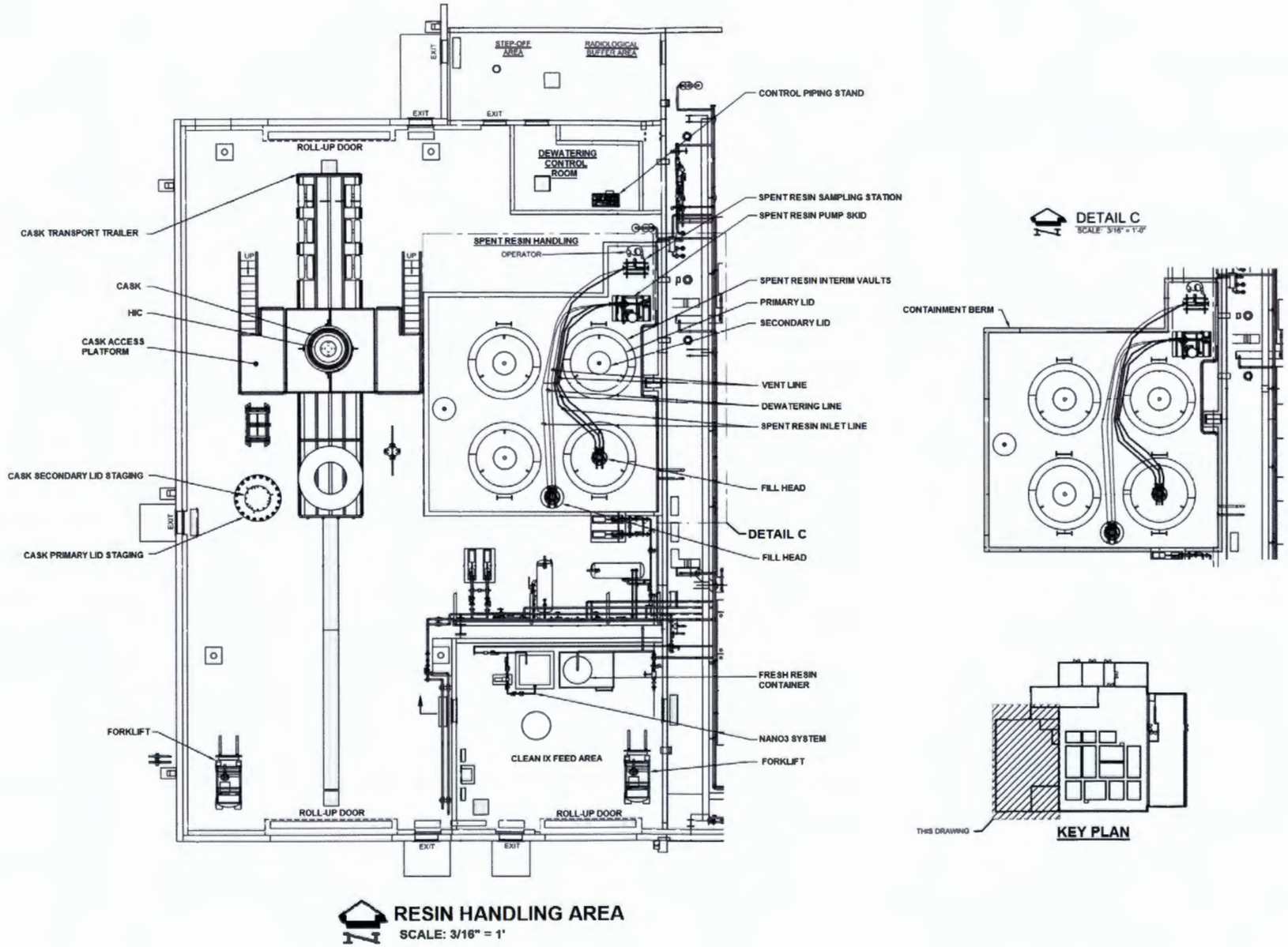

C.1.6 Resin Management and De-watering Equipment

The resin removal and dewatering equipment is located in the Spent Resin Handling Bay. This area includes a HIC fill head, pneumatic lid tool, pump skid, verification tank, and waste control valve. The purpose of the handling equipment is to remove water from a HIC during an IX resin change out reducing the waste transported and to meet disposal site criteria for free liquids.

The fill head is used for handling sluiced resin and dewatering the HIC. The fill head uses flexible hose connections to a hose station that links hard pipe connections to the dewatering pump and the LAWPS facility piping. The pneumatic lid tool is a specially designed, lifting device that enables personnel to remotely remove and install the HIC lid. An air-powered rotary motor drives four mechanical blocks that engage with the four recessed pockets of the HIC lid to screw the lid on or off. A system of clamps, limit switches, solenoid valves, and video cameras are used to align, unscrew, and reinstall the lid with the HIC. The Closed Circuit TV (CCTV) system will be primarily used for verification that the indication marks on the HIC body and lid meet to complete the lid closure process before the cask lid is reinstalled. CCTV is also used to perform tank system inspections (reference Addendum I, Inspection Plan, for additional information).

Figure C.7 shows a transport cask and trailer located at the folding platform.

Figure C.7. HIC Cask and Trailer

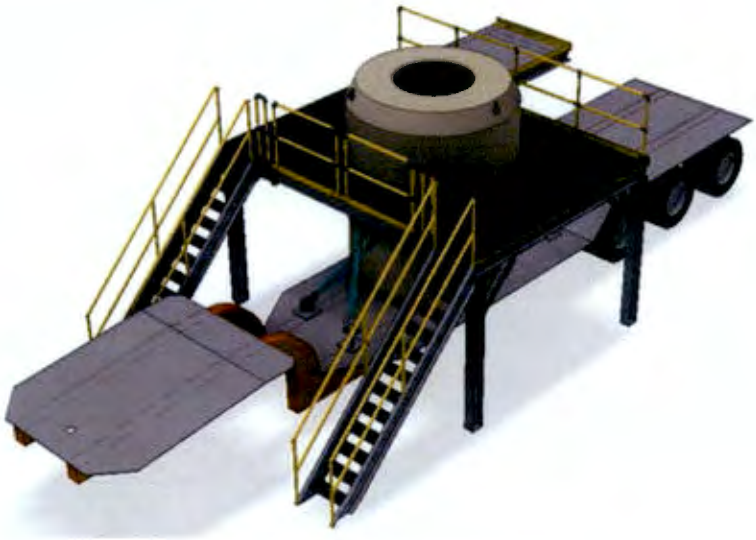

Upon spent resin removal completion, fresh resin is added to the columns. Fresh resin addition is a clean (i.e., uncontaminated) process undertaken in the Clean Feed/IX Media Area. Two vendor supplied containers (totes) of fresh resin are provided for feeding resin to each column. The containers are placed on the platform using a fork-truck and the resin is added to column using gravity with some water.

C.1.7 Cesium Product Tank Returns

Secondary liquid effluent waste streams generated by the LAWPS facility are transferred back to the DST System in a dedicated, encased (pipe-in-pipe) transfer line. The secondary waste streams are stored in the cesium product tank at the LAWPS facility and could consist of liquids from a number of different sources, including:

- Eluted IX Column Waste (concentrated Cs Stream)
- Dewatering liquid from the resin handing facility
- Liquids from the various vault sumps and pump and valve pits
- Off-specification Lag Storage Tank waste

- Overflow liquids from other LAWPS tanks
- pH adjustment and corrosion protection solutions.

Transfers back to the 241-AP Tank Farm are controlled, in part, through interlocks between LAWPS and the Tank Farm control system. In addition to procedural transfer authorizations, the process includes control system interlocks (AP Tank Farm ready to receive, LAWPS facility ready to transfer, permissive acceptance, cesium product tank level interlock, AP Tank Farm shutdown signal, and process interlocks).

C.1.8 Water and Chemical Additions

Reagent tanks and associated pumps are located in a 39 x 45-feet (12 x 14-meter) containment area outside of the main process building (refer to Figure C.1). The main chemical reagent equipment include the tanks and equipment required to support process operation.

The water and chemical systems are monitored and controlled by the misroute prevention system (MPS) to address misroute hazards.

C.1.9 Treated LAW Storage and Transfer

After exiting the lag IX column, the treated LAW flows to the TWDT. The TWDT serves to allow approximately 100 minutes of holdup allowing ^{137}Ba-m to decay in order to accurately measure residual cesium.

The treated waste generated from the IX columns is slowly passed through the TWDT (reference Figure C.8). This tank provides a defined holdup for the waste based on the flow rate and volume. The TWDT provides a retention volume for the waste to allow the ^{137}Ba-m daughter to decay to stable ^{137}Ba, which allows the detection of residual ^{137}Cs by three gamma detectors (using 2 out of 3 voting logic). An increase in the gamma radiation levels indicates that higher levels of ^{137}Cs are present in the treated waste stream. This is an indicator of potential breakthrough or an off-normal event. In such an instance, the treated waste stream can either be rerouted to the FFT for retreatment or can be directed to the cesium product tank for transfer back to AP Tank Farm. From the TWDT, treated LAW is directed to the three lag storage tanks.

Treated LAW transfer is monitored and controlled by a basic process control system to prevent the transfer of high cesium waste to lag storage tanks. This system includes the following controls:

- Three gamma monitors located downstream of the TWDT tank that record radiation levels in the waste subsequent to the holdup in the TWDT. These monitors direct the control system to automatically divert the treated waste stream to the FFT for retreatment or cesium product tank when the monitors detect off-specification waste in route to the LAW lag storage tanks. The use of three sensors and 2 out of 3 voting logic provides the required reliability for this detection function.

- Double isolation valves isolate the lag storage tanks from the treated waste stream when it contains high concentrations of cesium. Another valve is used to re-direct the waste stream to the cesium product tank based on the gamma monitors' output and control logic. In the event of a power outage, the fail-safe positions for these valves is to isolate the LAW lag storage tanks and open the pathway to the cesium product tank.

Figure C.8. Treated Waste Delay Tank

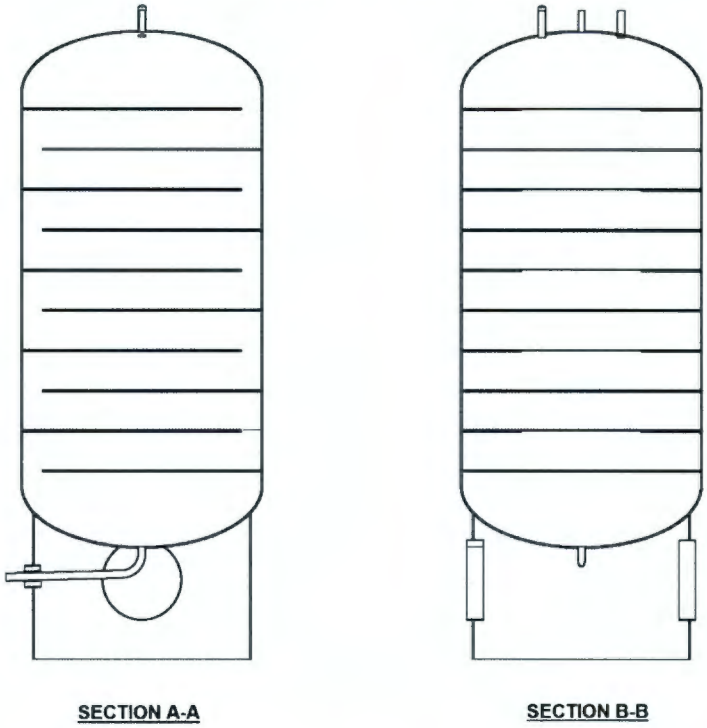

Treated Waste Delay Tank
General Configuration

C.1.9.1 Lag Storage Tanks

From the TWDT, treated waste determined to be within specified gamma levels is directed to one of three lag storage tanks. At any given time, each of the three storage tanks can be in one of the following states:

- Filling with treated waste
- Isolated and sampled and awaiting analytical results
- Approved for transfer to WTP LAW.

Once transfer approval is received, the waste in the lag storage tank is transferred in batches to the WTP LAW processing facility for vitrification. Treated waste that fails analytical analysis as out-of-specification (off-spec) material is transferred back to the 241-AP Tank Farm valve pit via the cesium product tank or can be rerouted back to the FFT for re-processing.

The design of the lag storage tanks includes the ability to decontaminate/flush each tank and to flush the transfer line with water. Flushing of the transfer lines will be performed as necessary. Operating parameters related to each lag storage tank is listed follows:

- Although instantaneous production rates may differ, treated LAW is processed through vitrification at the WTP LAW facility at the same annual average rate that it is produced in the LAWPS facility
- Treated LAW batch volume of 9,110 gallons (34,485 liters) and a batch frequency of one batch every 16 hours. These figures are approximate and will vary.

Each lag storage tank contains one installed pump to facilitate LAW transfers, but provisions exist to install a second pump. Each tank also contains an agitator that keeps the treated LAW mixed and reduces heel formation on the tank bottom.

C.1.10 Process Building and Vault/Process Vessel Ventilation Systems

The LAWPS facility ventilation includes two systems; the Building and Vault Ventilation System (BVV) and the Process Vessel Ventilation System (PVV). One system provides HVAC to the process building and vaults, while the second system provides ventilation for the process vessel head spaces. A portion of the PVV system is safety significant and is considered the Standby Tank Exhaust System (STES).

The primary function of the LAWPS HVAC system for the process building and vaults is to maintain a negative differential pressure for the facility relative to atmospheric pressure, maintain the internal temperature within the design requirements, and prevent the release of potential radiological contamination to the environment. The process building includes; the truck access airlock, the storage area for IX media (resin), the spent resin handling room and the main area over the process vaults (excluding the LAW lag storage tanks vault). The process vaults are below grade spaces containing the tank systems and associated piping as well as the various pits for pumps, valves, and ancillary piping.

The PVV STES portion of the system provides headspace ventilation for tanks with a flammable gas (hydrogen) generation potential. These tanks are the Lag Storage Tanks (LAG-TK-01, LAG-TK-302, LAG-TK-303), Cesium Product Tank (ECS-TK-200), and Filter Feed Tank (CFF-TK-100). A connection is also provided for intermittent venting of the spent resin handling fill head.

C.1.11 DST to LAWPS Transfer Piping

Three waste transfer lines routed to/from the AP Tank Farm support LAWPS process operations. Waste is transferred from the 241-AP Tank Farm to the LAWPS facility while return waste is transferred back to 241-AP Tank Farm through two lines via the LAWPS return pumps. The transfer line routes include pipe-in-pipe construction for secondary containment and leak detection. Pipelines are bermed and/or buried to meet shielding requirements and to provide protection from the environment. Where practical, pipelines will be run alongside existing waste transfer piping to conserve space on site. These lines are provided with anchors and necessary changes in pipe run direction to provide for pipe thermal expansion. Lines include necessary flush and drain connections. In general, pipelines are sloped from AP Tank Farm to LAWPS and from LAWPS to WTP to provide positive drainage to collection points. Drainage also supports leak detection at low-points in the transfer piping in accordance with WAC 173-303-640(4).

C.1.12 LAWPS to WTP Transfer Piping

The treated LAW transfer line exits the LAWPS facility to the South and follows a path to the East then Northeast to the WTP alternate interface point (Refer to Figure C.9 for transfer piping configuration between DST, LAWPS and WTP). The low point of this new line will coincide with the WTP Effluent Management Facility (EMF) that contains a drain tank. The drain tank has the ability to be valved out during waste transfers and configured to allow flush water, as needed, to drain to this low point subsequent to each transfer.

Transfers of waste from any one of the lag storage tanks is initiated by a series of sequential steps. This requires the lag storage tanks to be sampled, analyzed and approved for transfer to WTP LAW prior to a transfer. Each transfer requires the following steps:

- Notify/request approval from WTP LAW for transfer
- Approval from WTP LAW for transfer, and the projected transfer volume
- Control signal from WTP LAW of readiness to receive the transfer of pre-treated LAW waste
- Valve position line up and permissive interlocks verified, transfer initiated

Once the approved transfers are completed, a volume of flush water can be introduced into the line if necessary, and the transfer to WTP is stopped.

The LAWPS design includes flushing capability from the lag storage transfer pumps to the WTP EMF low-point drain. WTP will be equipped to detect the transfer line flush water density such that minimal flush water will be allowed into the LAW Vitrification facility and the majority of the flush water drains to the EMF drain tank. Waste transfers can also be automatically stopped in the event that:

- Lag storage level indicator drops to minimum level,
- WTP LAW transmits a termination or "permission lost" signal,
- Control system detects a leak in the transfer line or in the valve vault, or
- Control system activates a transfer interlock (equipment or process related).

For the purposes of this permit application, the EMF to DST return transfer line is included to allow for design and installation. Relevant drawings are included in the design media tables included later in this section. Prior to commissioning and startup, operational responsibility for the EMF to DST return line will be transferred to WTP via a future permit modification request and subsequent modifications to both the LAWPS and WTP permits to reflect the change in operational responsibility.

Figure C.9. Transfer Piping Interface Points

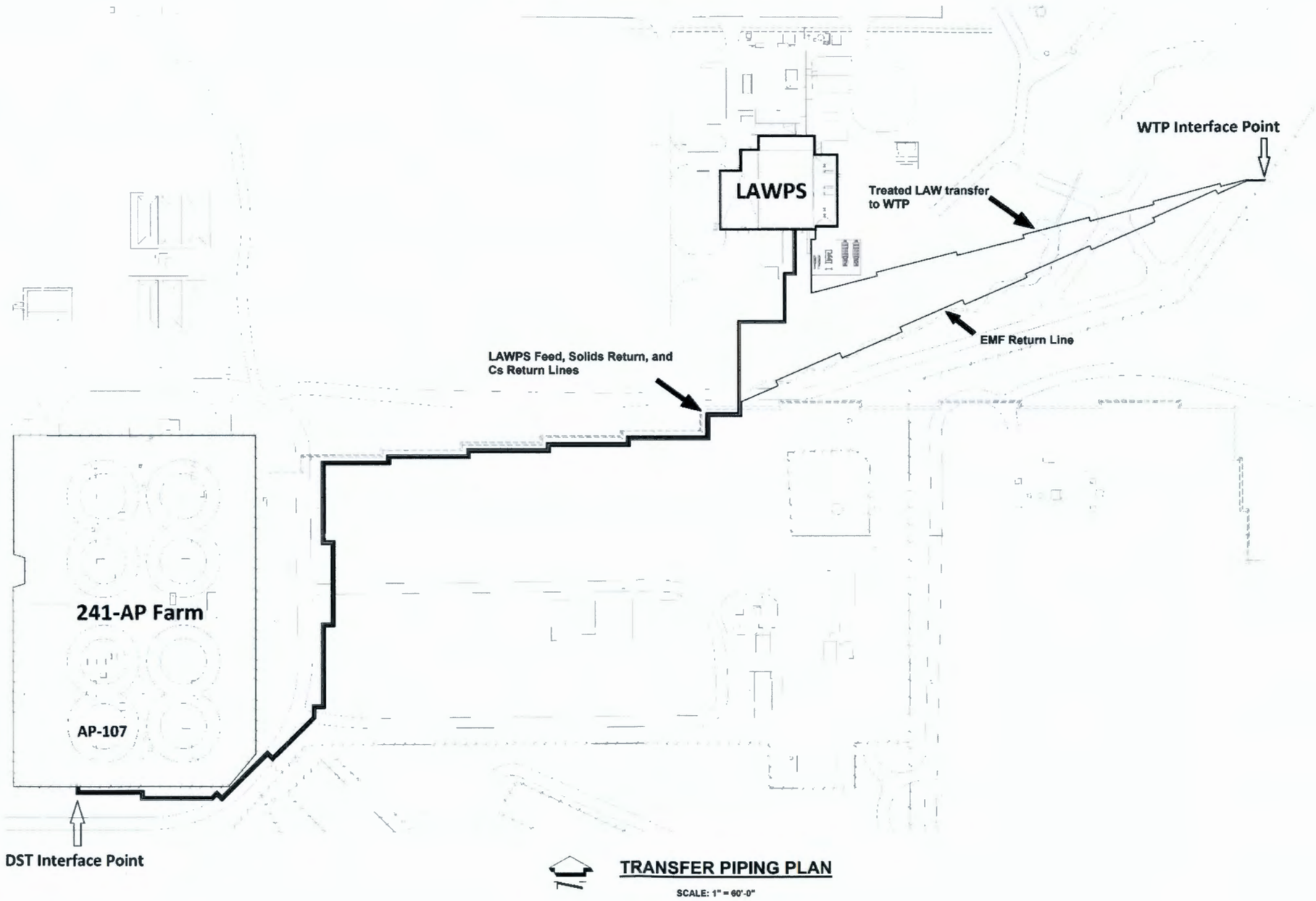

C.1.13 Enclosure and Vault Layout

The LAWPS facility is located approximately 800 feet (244 meters) east and 400 feet (122 meters) north of the existing fenced area of the 241-AP Tank Farm (refer to Figure C.9).

The LAWPS facility consists of a below-grade reinforced concrete structure with two major vault areas, the lag storage vault area and the process vault area. Constructed above the process vault area is the main Process Building (weather enclosure) that also houses a lay down area and truck bay. Contiguous to this building are the Spent Resin Handling Area, Clean Feed/IX Media Area, and personnel entry and exit, fire and utility rooms. A separate enclosure exists over the Lag Storage Tank vault.

C.1.14 Lag Storage Tanks Vault

The Lag Storage Tank Vault nominal dimensions are 112 x 42 x 48-feet (34 x 13 x 15-meter) deep to the bottom of the base mat slab with the top slab at grade. The Lag Storage Tank Vault is a single cell that houses the three Lag Storage Tanks. A ten-foot high weir wall between each Lag Storage Tank creates a retention area around each tank with volume capable of containing 100 percent of a single tank's capacity. The Lag Storage Tank Vault has a stainless steel liner to the height of the weir walls serving as secondary containment (refer to Section C.3.3 for additional secondary containment information). The shielded deck that houses the two transfer pumps and agitators for each Lag Storage Tank is enclosed within a building that allows direct personnel access for pump and agitator maintenance or removal. Adjacent to the Lag Storage tank vault at grade is a gravel surfaced area for crane set up to perform maintenance operations on Lag Storage Tank equipment.

C.1.15 Process Vaults

The Process Vault area is approximately 68 to 76 feet (21 to 23 meters). The vaults are below grade concrete structures with depth of embedment varying from 23 to 48 feet (7 to 15 meters) to the bottom of the base mat slab. Constructed above the Process Vault is the main Process Building (weather enclosure) that also houses a staging, maintenance, and lay down area with a truck bay. The Process Vaults are divided into numerous smaller vaults or pits with separate tank vaults, pump pits, and valve pits segregated from adjacent equipment by structural, shielding walls. A general arrangement layout for the LAWPS process areas and vault system is shown in Figure C.10.

The FFT, IX Columns, Cs Product Tank, and the TWDT are all located in their own subdivided vaults with segregated pump pits located above each tank as described below. The roof of the tank vaults separating the tank vault from the pump pit consists of concrete with access hatches. General concept illustrations showing typical vault/pit design features are shown in Figures C.11 and C.13. These features allow installation of tanks after completion of primary concrete structure construction, allows unimpeded access during construction and installation of equipment and commodities in the tank vaults, and improves access during decommissioning and eventual equipment removal. Each tank vault is provided with stainless steel secondary containment cladding that is sloped to a collection sump. The process tanks are designed for the life of the facility and are piped with welded connections to reduce the number of mechanical connections.

All pump pits and valve pits have steel shield covers and include penetrations for instrumentation, electrical lines, pneumatic lines, pipelines, sampling, and inspection ports so that the majority of maintainable components are located above the shielding covers. This approach allows direct hands on maintenance for instrumentation, transmitters, monitors, and valve actuators.

Equipment located in the radiation zone below the shield covers that require periodic maintenance such as pumps and instrument detector heads are connected using jumpers and connectors to facilitate removal. Access to this equipment is performed semi-remotely after removal of the shield covers.

The pump/valve pit covers and tank vault roof plates include seals to provide containment for any contamination present under the cover as shown in Figure C.12. These seals are located between the steel cover or concrete plates and the supporting concrete building structure.

Figure C.10. LAWPS Process Area Layout

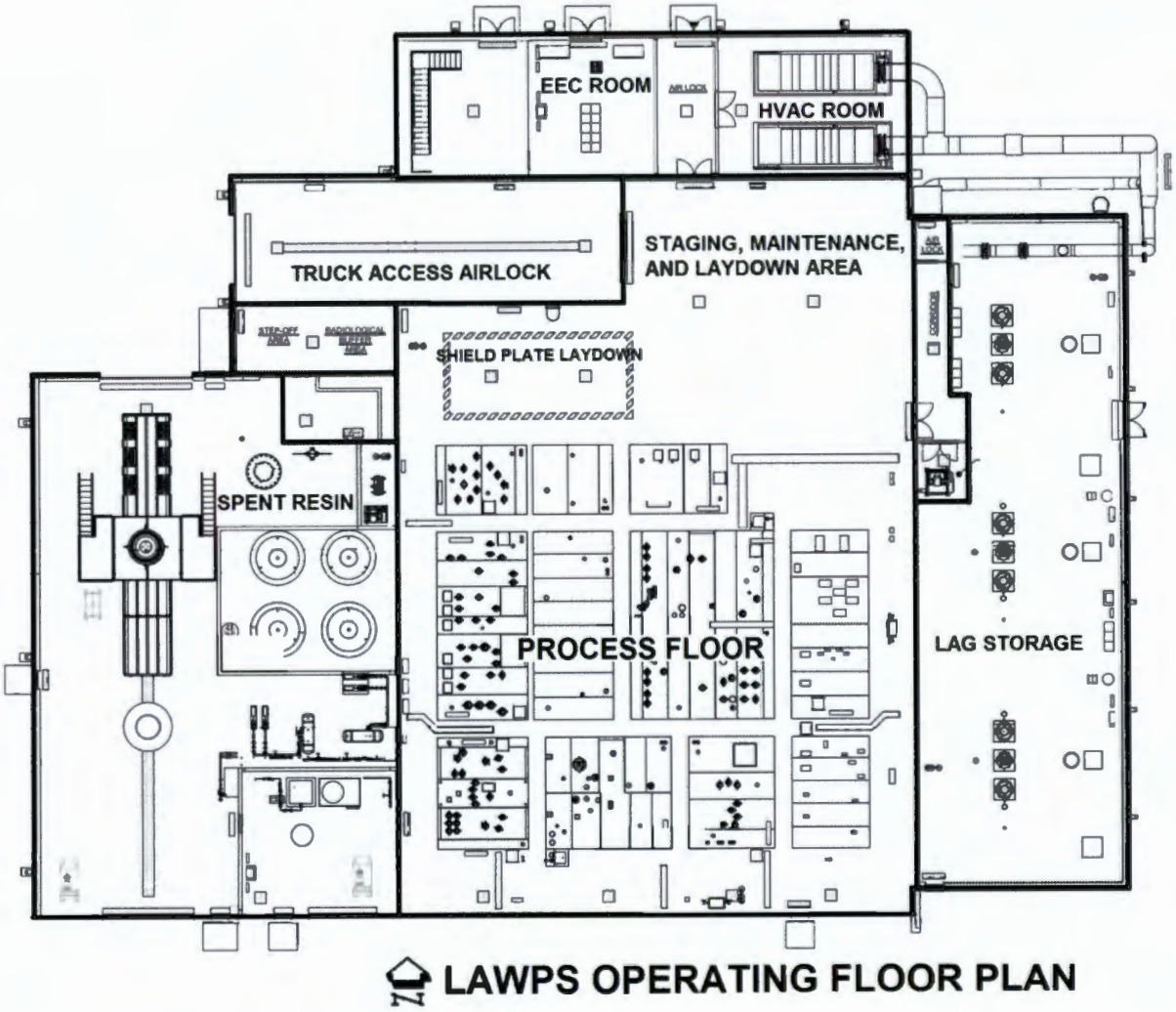

Figure C.11. Typical LAWPS Vault and Valve Pit Design Features

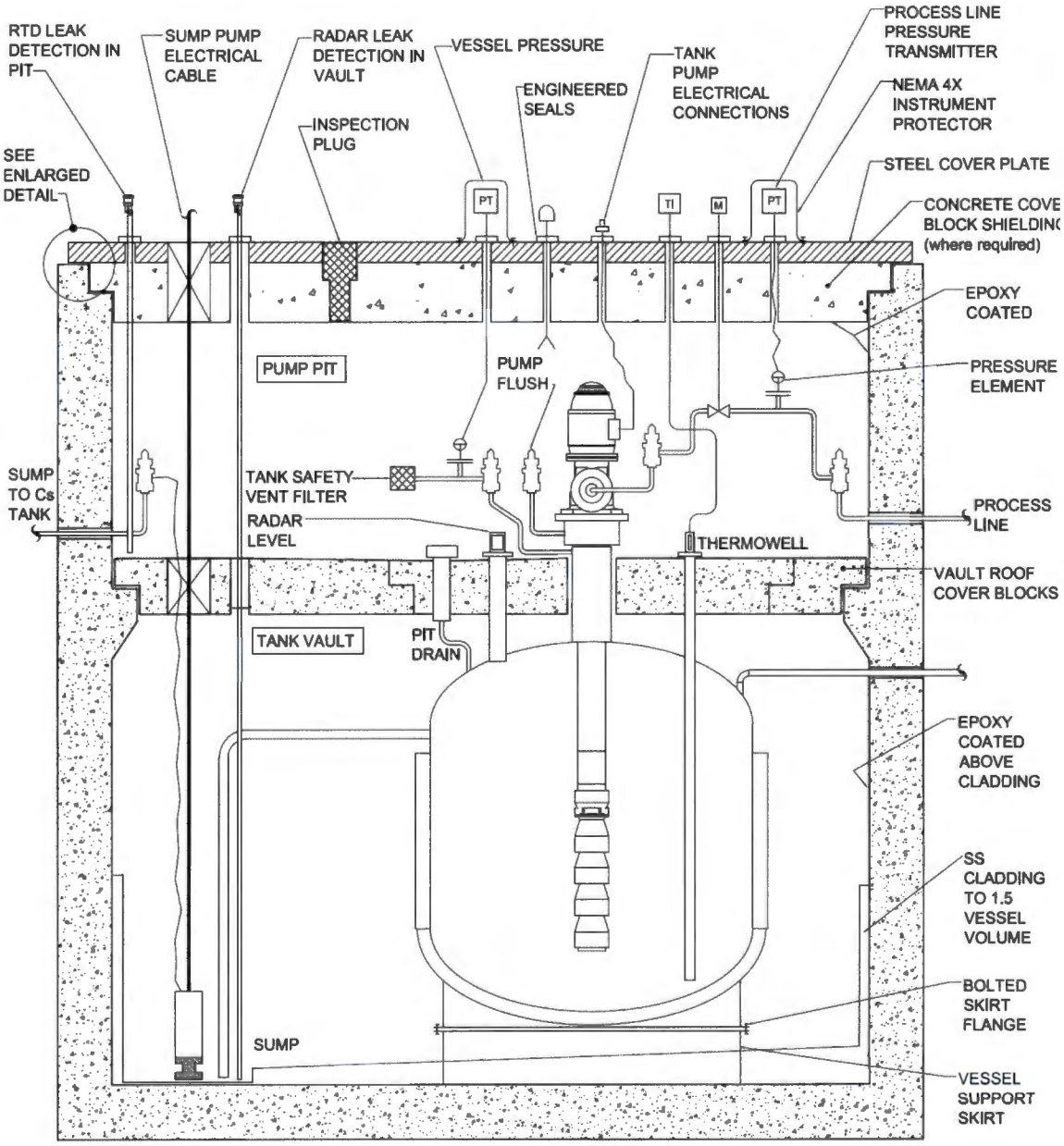

Figure C.12. Example LAWPS Pit Cover Plate Seal

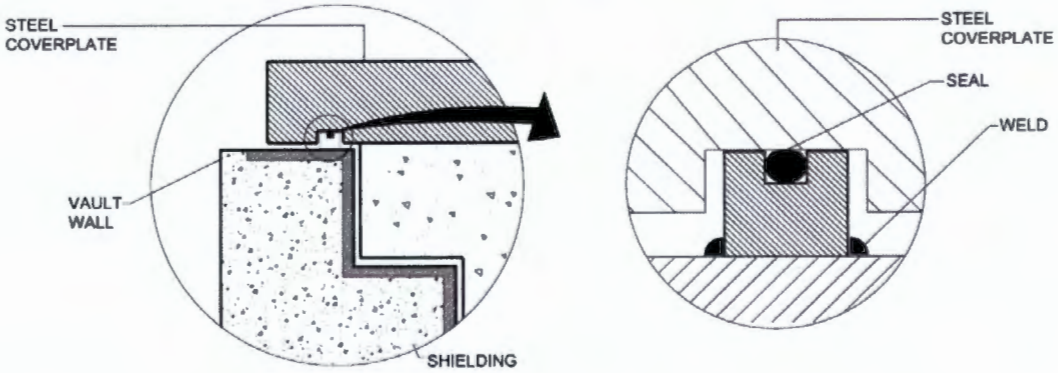

Figure C.13. Typical LAWPS Valve Pit Design Features

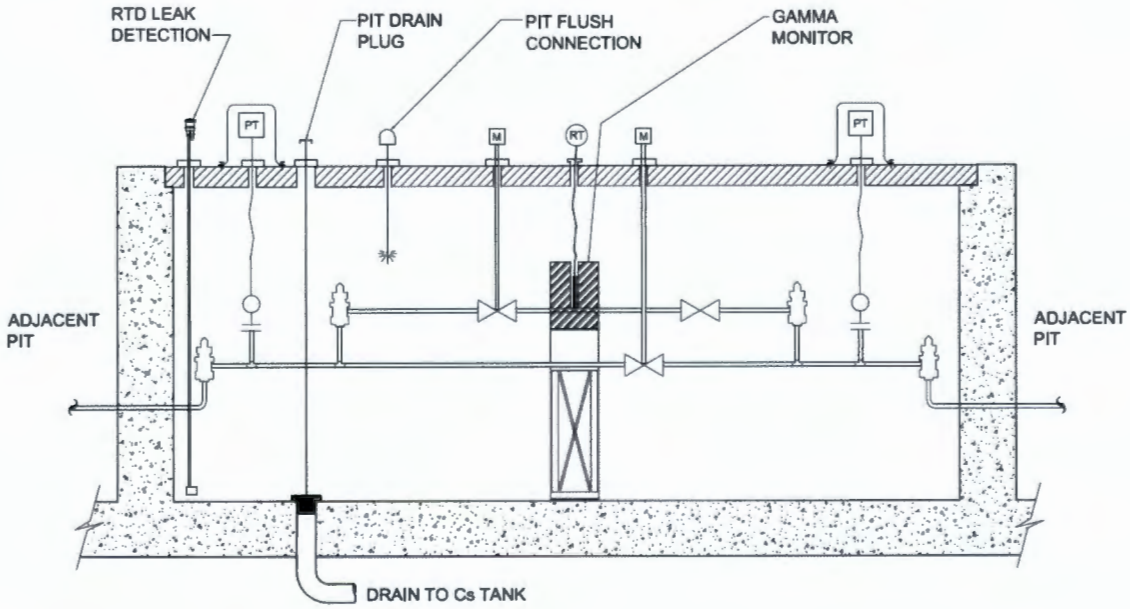

C.1.16 Process Building

The process vaults are covered by a steel framed, metal-sided building. This enclosure provides weather protection and ventilation as well as personnel access control for the area over the primary process vaults. The general layout inside the process building is shown in Figure C.10.

The main process building covers the primary process vaults but not the lag storage tank vaults, which are housed below-grade on the east side of the process building. The lag storage area is enclosed within a separate building. The main process building also houses a lay down area with a truck bay adjacent to the vault areas. Contiguous to the main process area on the east side are the Spent Resin Handling Area and the Clean Feed/IX Media area. On the north side are the personnel entry and exit facilities and a fire/utility room.

The main process building includes a 30-ton bridge crane that runs the full north-south length of the building over the vault area, the lay down area, and the truck bay in the lay down area. The crane spans the full length of the primary process vaults and is a class D (Heavy Service) crane per Crane Manufacturers Association of America (CMAA) 70, designed, built, and tested under an NQA-1 quality

assurance program. The crane as well as the supporting building structure are seismically designed in accordance with Section 4150 of ASME NOG-1, *Standard Rules for Construction of Overhead and Gantry Cranes*.

C.1.17 Utilities and Balance of Plant

A raw water line is routed from connection points at the northeast side of 241-AP Tank Farm and north of the LAWPS site. A potable water line is routed from a connection point that is north of the LAWPS facility. The LAWPS site is accessed by a road connection linking the road in the northeast side of 241-AP Tank Farm. General support facilities include a reagent tank area, ventilation skids and exhaust stacks, personnel change facility, chiller, Electrical Equipment Center (EEC), and compressors pads.

C.1.17.1 Process Monitoring and Control

The monitoring and control system (MCS) is provided for process monitoring, modulating control, and process interlocks, and sequencing. The LAWPS controls design is consistent with the Tank Farms Strategic Plan TFC-PLN-118, *Strategic Plan for Hanford Waste Feed Delivery and Treatment Process Control System,* and its requirement to utilize standard process monitoring and control hardware, software, and support services. Process controllers, input/output (I/O), and a secondary operator interface will be located within the EEC. LAWPS controls are integrated into the Tank Farm Local Area Network (TFLAN), and the primary operator interface is located at the Central Control Room. A high level of automation is utilized to minimize direct operator interaction with LAWPS process operations. Besides reducing dose to operators, automation provides benefits including higher reliability, less down time, lower lifecycle costs, and tighter and more responsive control of the process.

C.1.17.2 Safety Instrumented System

An independent Safety Instrumented System (SIS) is provided for the LAWPS to implement Safety Instrumented Functions (SIFs) that have been identified. The SIS has a functional nuclear safety classification of Safety Significant and is independent from the process controls. The SIS is housed in a dedicated, safety significant classification enclosure located outside and to the North of the EEC.

C.1.18 Instrumentation and Control

The SIS logic solver, I/O, and field devices necessary to carry out a safety function, including sensors and final elements, comply with ANSI/ISA 84.00.01-2004 (ISA 84, *Functional Safety: Safety Instrumented Systems for the Process Industry Sector*), as implemented by WRPS management plan TFC-PLN-138, *ANSI/ISA 84.00.01-2004 Part 1 Plan Implementation*. This plan has been applied to the design, installation, testing, operation, modification, and decommissioning of the SIS. The SIS hardware, software, and communications protocol utilize preferred equipment chosen for implementation of ISA 84 safety systems at the site.

C.1.19 Fire Suppression and Fire Alarm

Automatic sprinkler systems in accordance with NFPA 13, *Standard for the Installation of Sprinkler Systems,* are provided in the main process building, personnel change facility, truck access airlock, reagent tank area, Spent Resin Handling area, and Clean Feed/IX Media Area. A firewater loop ties in to the 12-inch (30.5 centimeter) raw water line that runs north of the LAWPS facility. The loop is approximately 1,000 feet (305 meters) with three new fire hydrants to provide manual fire suppression support for the LAWPS. This firewater loop also provides the water supply for the water sprinkler and deluge systems.

The LAWPS is equipped with an automatic fire detection system for all areas with automatic sprinkler or deluge systems. Fire alarm initiation or activation of a suppression system results in a radio-transmitted alarm to the Hanford Fire Department.

C.2 Containers

LAWPS includes two container dangerous waste management units used for secondary solid mixed waste generated from process operations. The first is located in the Staging, Maintenance, and Laydown Area within the main process building. Container storage in this area will consist of packaged mixed waste debris generated from maintenance activities. Examples of waste debris include long-length pumps, eductors, and smaller items such as valves, jumpers, and other miscellaneous maintenance waste.

The second container dangerous waste management unit is located in the Spent Resin Handling Area. Container storage in this area will consist of packaged spent resin generated from the recharge of the IX columns. In addition, treatment will be conducted on containers holding spent resin and is limited to the dewatering of the resin to facilitate transportation.

Other secondary solid waste that results from the balance of process operations is considered newly generated waste that requires packaging for shipment and disposal. This secondary waste may be stored in the Staging Maintenance and Laydown or Spent Resin Handling areas if suitable, or will be managed in accordance with the applicable sections WAC 173-303-200, accumulation standards and WAC 173-303-630, use and management of containers. Waste stream types may include, but are not limited to the following examples:

- Personal protective equipment/step-off pad waste
- Decontamination materials.
- Spill cleanup materials.

In addition, satellite accumulation areas may be used as necessary for routinely generated dangerous waste in accordance with WAC 173-303-200(2).

C.3 Tank Systems

This section provides specific information on the LAWPS tank system and associated process units and includes discussion on the types of waste to be managed in the tanks, tank design information, integrity assessments, and additional information on the LAWPS tanks that treat and store mixed waste. The LAWPS dangerous waste tanks are discussed in Sections C.1 through C.1.9 and the locations of the tanks and process units are presented in Figure C.14. The total estimated volume of each tank (reflective of total physical dimensions, including headspace) is shown in Table C.1

Figure C.14. LAWPS Process Tanks Layout

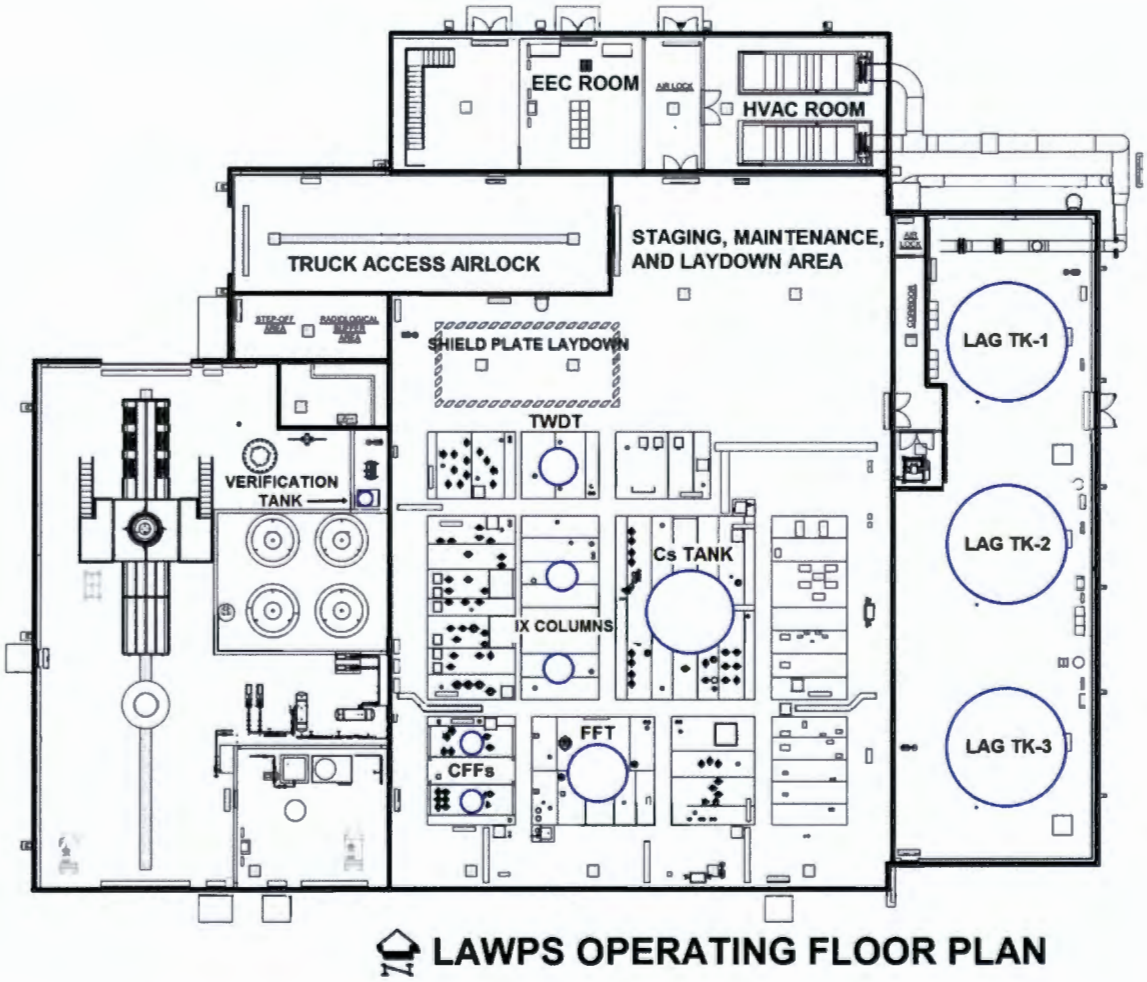

Table C.1. Total Tank Size (including headspace, as applicable)

Tank Name	Number	Gallon	Liter
Filter Feed Tank	CFF-TK-100	6,100	23,058
Cs Product Tank	ECS-TK-200	35,000	132,300
Treated Waste Delay Tank	IX-TK-300	2,490	9,412
Lag Storage Tank 1	LAG-TK-301	124,000	468,720
Lag Storage Tank 2	LAG-TK-302	124,000	468,720
Lag Storage Tank 3	LAG-TK-303	124,000	468,720
Verification Tank	RH-TK-402	20	76

C.3.1 Design Requirements

The following sections provide an overview of the design specifications for the tanks within the LAWPS. A separate discussion on the design of the other process units also is provided. In accordance with the new tank system requirements of WAC 173-303-640(3), the following tank components and specifications were assessed:

- Dimensions, capacities, wall thicknesses, and pipe connections
- Materials of construction and linings and compatibility of materials with the waste being processed
- Materials of construction of foundations and structural supports
- Review of design codes and standards used in construction
- Review of structural design calculations, including seismic design basis
- Waste characteristics and the effects of waste on corrosion

A design assessment to established compliance with WAC 173-303-640(3) is being performed and will submitted following certification by an Independent Qualified Registered Professional Engineer.

The specifications and requirements for the preparation, design, and construction of the tank systems at the LAWPS are documented in the RPP-SPEC-56967, *Project T5L01 Low Activity Waste Pretreatment System Specification* (as amended).

All of the dangerous waste storage and treatment tanks in the LAWPS are constructed of stainless steel. According to the design basis, it was determined stainless steel provides adequate corrosion protection for these tanks. Table C.2 summarizes additional design details for the LAWPS tanks.

Table C.2. LAWPS Tank System Information

Description	Vessel Material	Maximum Volume[1]	Working Volume	Structural Support	Liner Seams	Vessel Connections
Filter Feed Tank	304 SS	4790 gallons (18,106 liters)	3715 gallons (14,043 liters)	SS skirt bolted to concrete	welded	welded and flanged
Treated Waste Delay Tank	304 SS	2,490-gallon (9,412-liter)	2,490-gallon (9,412-liter)	SS skirt bolted to concrete	welded	welded and flanged
Cesium Product Tank	304 SS	28,000 gallons (105,840 liters)	25,000 gallons (94,500 liters)	SS skirt bolted to concrete	welded	welded and flanged
Lag Storage Tanks (3)	304 SS	99,000 gallons (374,220 liter)	89,000 gallons (336,420 liters)	SS skirt bolted to concrete	welded	welded and flanged
Verification Tank	304 SS	20 gallons (76 liters)	20 gallons (76 liters)	SS skid bolted to concrete	coated	welded and flanged

[1] Maximum volume is the tank volume to the level of the overflow control point.

Notes:

- Specific tank dimensions (height, diameter) and shell thickness will be determined as part of final design prepared to meet the provided performance specifications. Tank sizing and working volumes defined to support process throughput demands.
- Secondary containment for all tanks will include a stainless steel liner, except for the verification tank, which will have an epoxy-coated containment berm.
- All tank headspaces are exhausted (either directly or indirectly) to the process vessel ventilation (PVV) system.
- Treated Waste Delay Tank is pressurized and full at all times in operation, so there is no difference between total tank size, the maximum volume or the working volume. Similarly, the verification tank is only used during final stages of dewatering and design does not differentiate between those values.

C.3.1.1 Codes and Standards for Tank System Construction

Specific standards for the manufacture of tanks and process systems installed in the LAWPS are briefly discussed in the following sections. In addition to these codes and industrial standards, a seismic analysis for each tank and process system is required [WAC 173-303-806(4)(a)(xi)]. The seismic analysis was

performed in accordance with DOE Order 420.1C, *Facility Safety* and American Society of Civil Engineers/Structural Engineering Institute, 43-05, *Seismic Design Criteria for Structures, Systems, and Components in Nuclear Facilities* (ASCE/SEI 43-05).

The tanks are maintained at or near atmospheric pressure with the codes and standards applicable to the design, construction, and testing of the tanks and ancillary piping systems as established in Table C.3.

Table C.3. Codes and Standards for Tanks and Ancillary Systems

Code/Standard	Title
ASME – B31.1 (2014)	Power Piping
ASME – B31.3 (2012)	Process Piping
ASME – Boiler and Pressure Vessel Code (2013)	Rules for Construction of Pressure Vessels
ASME – NQA-1A-2009	Quality Assurance Requirements for Nuclear Facility Applications
AWS – D1.1/D1.1M (2010)	Structural Welding Code – Steel
AWS – D1.6/D1.6M (2007)	Structural Welding Code – Stainless Steel
API 620 (2013), Addendum 1, (2014)	Design and Construction of Large Welded Low Pressure Storage Tanks

The application of these standards to the construction of LAWPS tanks and independent verification of completed systems ensures that the tank and tank supports have sufficient structural strength and that seams and connections are adequate to ensure tank integrity. In addition, each tank will meet strict quality assurance requirements. Any tank constructed offsite will be tested for integrity and leak tightness before shipment to the Hanford Facility. Following installation, the systems will be inspected for damage to ensure against leakage and to verify proper operation. If a tank was damaged during shipment or installation, leak tightness testing will be repeated onsite.

C.3.1.2 LAWPS Tank Design Information

All of the LAWPS tanks are to be located in below-grade shielded vaults equipped with stainless steel liners and leak detection. The vault structures and stainless steel liners serve as secondary containment for the tank systems.

Filter Feed Tank and Ancillary Equipment. The FFT is a stainless steel tank. Ancillary equipment for this tank includes all associated inlet and outlet piping, valves, pumps, and secondary containment system, including leak detection.

Cesium Product Tank and Ancillary Equipment. The Cs product tank is a stainless steel tank designed to receive and accumulate secondary waste streams from the IX elution, off specification waste, decontamination rinses, and liquids from valve pits and vault sumps. Ancillary equipment for this tank includes all associated inlet and outlet piping, valves, pumps, and secondary containment system, including leak detection.

Treated Waste Delay Tank and Ancillary Equipment. The TWDT is a stainless steel tank designed for hold-up to allow for ^{137}Ba decay before verifying gamma radiation levels prior to transfer to the lag storage tanks. Ancillary equipment for this tank includes all associated inlet and outlet piping, valves, pumps, and secondary containment system, including leak detection.

Lag Storage Tanks and Ancillary Equipment. The three lag storage tanks are constructed of stainless steel. Treated waste is held in the lag storage tanks for verification sampling and feed to the WTP LAW upon verification of acceptance. Ancillary equipment for each tank is identical and includes all associated inlet and outlet piping, valves, pumps, and secondary containment system, including leak detection.

Verification Tank and Ancillary Equipment. The Verification Tank is constructed of stainless steel and is used in the final spent resin dewatering process. Ancillary equipment for this tank includes all associated inlet and outlet piping, valves, pumps, and secondary containment system, including leak detection.

C.3.1.3 Design Information for LAWPS Process Units

The LAWPS process units will be constructed to meet a series of design standards, as discussed in the following sections. Table C.3 above presents the applicable design standards and codes, and Table C.4 and C.5 provide additional information on key ancillary equipment and materials of construction associated with the LAWPS process units. All piping systems are designed to withstand the effects of internal pressure, weight, thermal expansion and contraction, and any pulsating flow. The design of these units will be evaluated in a LAWPS engineering design assessment certified by an Independent Qualified Registered Professional Engineer (IQRPE). Follow-on integrity assessments, including frequency, will be established following completion of the design assessment.

Table C.4. Ancillary Equipment and Material Data

System	Ancillary Equipment	Number	Material
Filter Feed Tank	Transfer pump (to CFFs)	CFF-TX-100	316 SS
	Return pump (to DST)		304 SS
Treated Waste Delay Tank	Gamma monitoring	IX-TK-300	304 SS
Cesium Product Tank	Return pump (to DST)	ECS-TK-200	304 SS
Lag Storage Tank 1	WTP LAW feed pump (1 each)	LAG-TK-301	316 SS
Lag Storage Tank 2	WTP LAW feed pump (1 each)	LAG-TK-302	316 SS
Lag Storage Tank 3	WTP LAW feed pump (1 each)	LAG-TK-303	316 SS
CFF 1	Filter Assembly	CFF-F-100	304 SS
CFF 2	Filter Assembly	CFF-F-101	304 SS
IX Column 1	Column	IX-IXC-200	304 SS
IX Column 1	Column	IX-IXC-201	304 SS
Verification Tank	Dewatering Pump	RH-TK-402	304 SS

C.3.1.4 Integrity Assessments

The initial design assessment for LAWPS will attest to the adequacy of design and integrity of the tanks and ancillary equipment to ensure that the tanks and ancillary equipment will not collapse, rupture, or fail over the intended life considering intended uses. Specifically, the assessment will document the following considerations:

- Standards used during design and construction of the facility
- Characteristics of the waste in each tank
- Adequacy of the materials of construction to provide corrosion protection from the solution in each tank

The results of the assessment will demonstrate that the tanks and ancillary equipment have sufficient structural integrity and are acceptable for storing and treating dangerous and/or mixed waste. The assessment will also state that the tanks and building were designed and constructed to withstand a design-basis earthquake. An IQRPE will certify the tank system assessment.

Consistent with the recommendations of the initial design assessment, a corrosion inspection program, if necessary, will be developed and will include periodic follow-on integrity assessments. The frequency of follow-on integrity assessments will be determined by the initial assessment and include considerations for age of the tank system, materials of construction, characteristics of the waste, operating experience, and recommendations of the initial design assessment. It is common for each of these tank types to be assessed on a frequency adequate to determine if corrosion or other indications of deterioration is occurring.

C.3.2 Additional Requirements for New Tanks

Procedures for proper installation of tanks, tank supports, piping, concrete, etc., are included in construction specifications. During and following installation, an independent qualified installation inspector or an independent, qualified, registered professional engineer will inspect the tanks and secondary containment in accordance with WAC 173-303-640(3)(c). Deficiencies identified are to be documented and a determination will be made as to repair/rework or use-as-is. All deficiencies requiring corrective action will be repaired to the satisfaction of the engineer. The tanks and ancillary equipment will be leak tested as part of acceptance of the system from the construction contractor. Information on the inspections and leak tests are to be included in the construction/installation certification.

C.3.3 Secondary Containment and Leak Detection

This section describes the design and operation of secondary containment and leak detection systems at the LAWPS.

C.3.3.1 Secondary Containment Requirements for All Tank Systems

The basis for sizing the secondary containment system liners in LAWPS are documented in calculation 31269-15-CALC-0001, *Vault and Pit Secondary Containment Volume and Liner Height* (latest revision). All systems are designed to national codes and standards. Constructing the LAWPS per these specifications ensures that foundations are capable of supporting tank and secondary containment systems and that uneven settling and failures from pressure gradients should not occur.

C.3.3.1.1 Common Elements

The following text describes elements of secondary containment that are common to all LAWPS tank systems. Details on the secondary containment for specific tanks, including leak detection systems and liquids removal, are provided in the following sections.

Foundation and Construction. For the dangerous waste storage and treatment tank systems within the LAWPS, secondary containment is provided for all vaults and pump/valve pits. All vaults will be provided secondary containment by a stainless steel lined concrete floor and walls to a height equal to the volume of the largest tank within its boundary. Valve and pump pits may be lined with a chemical resistant epoxy coating. Stainless steel liner and epoxy heights along the vault and pit walls vary with the dimensions of the vaults and valve/pump pits, and the required containment volume.

The transfer piping that carries aqueous waste into, and out of, the LAWPS is pipe-within-a-pipe construction, and is buried approximately 3.9 feet (1.2 meters) below ground surface. The balance of tank system piping either is located within either stainless steel lined vaults or epoxy lined valve/pump pits.

There are seven discrete secondary containment systems associated with the following tanks and ancillary equipment that treat or store dangerous waste:

- Filter feed tank
- Cross flow filters
- IX columns
- Cs product tank
- Lag storage tanks
- Verification tank

- Valve and pump pits
- Liquid collection sump pits
- LAWPS feed, return, and treated LAW transfer piping.

All of the secondary containment systems (excluding LAWPS feed, return, and treated LAW transfer piping) are designed with reinforcing steel and base and wall thickness to minimize failure caused by pressure gradients, physical contact with the waste, and climatic conditions. Established principles and techniques for structural analysis, soil mechanics, and concrete and structural steel design were used in the design calculations for the foundations and structures. In each of the analyses, the major design criteria are established from the documents listed in Table C.5.

Table C.5. Codes and Standards for Structural Systems

Document	Title
DOE Order 420.1C	Facility Safety
SDC-4.1	Standard Architectural-Civil Design Criteria, Design Loads for Facilities (DOE-RL 1988)
IBC (2012)	International Building Code
ISA-84.00.01 (2004)	Functional Safety: Safety Instrumented Systems for the Process Industry Sector
ACI 301 (2010)	Standard Specification for Structural Concrete
ACI 318 (2014)	Building Code Requirements for Structural Concrete.
ACI 349 (2013)	Code Requirements for Nuclear Safety-Related Concrete Structures and Commentary.

Containment Materials. Vault and pit floors consists of cast-in-place concrete slabs. All slab joints and floor and wall joints in areas that serve as secondary containment will have water stops, or equivalent, installed.

All concrete floor surfaces in the secondary containment systems for vaults are lined with stainless steel. Stainless steel liner heights along containment walls vary with the dimensions of the vaults and the required containment volumes. The stainless steel liners protect the concrete from contact with any chemical materials that might be harmful to concrete and prevents the concrete from being in contact with waste material. Table C.2 summarizes where stainless steel liners are specified for use as secondary containment in LAWPS. The stainless steel liners are considered integral to the secondary containment system for the tanks and ancillary equipment.

All concrete floor surfaces in the secondary containment systems for pump and valve pits may be lined with epoxy. The epoxy lining height varies with the dimensions of the pits and the required containment volumes. The epoxy coatings protect the concrete from contact with any chemical materials that might be harmful to concrete and prevents the concrete from being in contact with waste material. Table C.6 summarizes the location where epoxy liners are expected to be used. Types of epoxy coatings specified for use on the concrete surfaces in the LAWPS are under development.

Table C.6. Locations with Secondary Containment Coatings

Cross Flow Filter (CFF) Pump Pit
Cross Flow Filter Valve Pit
IX Lead Column Valve Pit
IX Lag Column Valve Pit
IX Columns Monitoring Pit
Treated Waste Delay Tank (TWDT) Valve Pit
Treated Waste Delay Tank (TWDT) Monitoring Pit
Cesium Product Tank Pump Pit
Cesium Product Tank Valve Pit
Lag Storage Maintenance Area Piping Containment
Staging, Maintenance and Laydown Area
Spent Resin Handling – General Area
Spent Resin Handling – HIC and Verification Tank Containment

NOTE: Specific coating materials selected will be established in Specification 13-2-016, *Field Applied Special Protective Coatings for Concrete Surfaces.*

There are a numerous inspection ports into the below-grade vault and valve/pump pits in process areas. Shield cover plates over vaults and valve/pump pits include a gasket seal to prevent any spilled or leaked material from reaching the environment from these access points.

Containment Capacity and Maintenance. Each of the containment areas are designed to contain 100 percent of the volume of the largest tank in each respective location in accordance with 173-303-640(4)(e)(ii)(A). LAWPS has no outside dangerous waste storage or treatment tanks that require consideration of the additional volume from a 25-year, 24-hour storm event.

C.3.3.2 Specific Containment Systems

The following discussion presents a description of the individual containment systems associated with specific tank systems.

Filter Feed Tank Secondary Containment. The FFT secondary containment is provided by a stainless steel lined vault with walls and a floor constructed of reinforced concrete. The FFT vault is sloped to drain liquids to a collection sump. The volume of the secondary containment is at least 6,100 gallons (23,091 liters), which is capable of containing the 100 percent of the FFT maximum design capacity. Leaks are detected by a sump leak detector that alarms in the Central Control Room. Leak detection is supported by an annual visual inspection of the FFT liner system via camera introduced into the vault as discussed in Addendum I, Inspection Plan. Alarms are monitored continuously in the Central Control Room during process operations, and at least daily when no process operations are occurring.

The floor of the secondary containment slopes to a sump in the corner of the containment area. An educator or a sump pump is used to transfer accumulated liquids in the secondary containment to the Cs product tank.

Cross Flow Filtration. Secondary containment is provided for both CFFs by a stainless steel lined vault with walls and a floor constructed of reinforced concrete. The FFT vault is sloped to drain liquids to a collection sump. Any liquids leaked to the secondary containment can be removed from the vault or drained to the Cs product tank in the event of a system upset. Leaks are detected by a leak detector that alarms in the Central Control Room. Leak detection is supported by an annual visual inspection of the CFF liner system via a camera introduced into the vault as discussed in Addendum I, Inspection Plan.

Alarms are monitored continuously in the Central Control Room during process operations; and at least daily when no process operations are occurring.

The floor of the secondary containment slopes to a sump in the corner of the containment area. An educator or a sump pump is used to transfer accumulated liquids in the secondary containment to the Cs product tank. Leak detection is supported by remote visual inspection as discussed in Addendum I, Inspection Plan.

Ion Exchange Columns. Secondary containment is provided for both the lead and lag IX columns by a stainless steel lined vault with walls and a floor constructed of reinforced concrete. The IX vault is sloped to drain liquids to a collection sump. Any liquids leaked to the secondary containment can be removed from the vault or drained to the Cs product tank in the event of a system upset. Leaks are detected by a leak detector that alarms in the Central Control Room. Leak detection is supported by an annual visual inspection via a camera introduced into the vault as discussed in Addendum I, Inspection Plan. Alarms are monitored continuously in the Central Control Room during process operations; and at least daily when no process operations are occurring.

The floor of the secondary containment slopes to a sump in the corner of the containment area. An educator or a sump pump is used to transfer accumulated liquids in the secondary containment to the Cs product tank. Leak detection is supported by remote visual inspection as discussed in Addendum I, Inspection Plan.

Treated Waste Delay Tank

Secondary containment is provided for the TWDT by a stainless steel lined vault with walls and a floor constructed of reinforced concrete. The TWDT vault is sloped to drain liquids to a collection sump. The volume of the secondary containment is at least 2,490 gallons (9,412 liters), which is capable of containing 100 percent of the TWDT maximum design capacity. Any liquids leaked to the secondary containment can be removed from the vault or drained to the Cs product tank in the event of a system upset. Leaks are detected by a leak detector that alarms in the Central Control Room. Leak detection is supported by an annual visual inspection via a camera introduced into the vault as discussed in Addendum I, Inspection Plan. Alarms are monitored continuously in the Central Control Room during process operations; and at least daily when no process operations are occurring.

The floor of the secondary containment slopes to a sump in the corner of the containment area. An educator or a sump pump is used to transfer accumulated liquids in the secondary containment to the Cs product tank. Leak detection is supported by remote visual inspection as discussed in Addendum I, Inspection Plan.

Cesium Product Tank. Secondary containment is provided for the Cs product tank by a stainless steel lined vault with walls and a floor constructed of reinforced concrete. The Cs vault is sloped to drain liquids to a collection sump. The volume of the secondary containment is at least 35,000 gallons (132,489 liters), which is capable of containing 100 percent of the Cs product tank maximum design capacity. Any leaked materials to the secondary containment can be pumped from the vault or back into the Cs product tank in the event of a system upset. Leaks are detected by a leak detector that alarms in the Central Control Room. Leak detection is supported by an annual visual inspection via camera introduced into the vault as discussed in Addendum I, Inspection Plan. Alarms are monitored continuously in the Central Control Room during process operations; and at least daily when no process operations are occurring.

The floor of the secondary containment slopes to a sump in the corner of the containment area. An educator or a sump pump is used to transfer accumulated liquids in the secondary containment back to the Cs product tank or the DST System. Leak detection is supported by remote visual inspection as discussed in Addendum I, Inspection Plan.

Lag Storage Tanks

Secondary containment is provided for all three-lag storage tanks by a stainless steel lined vault with walls and a floor constructed of reinforced concrete. The lag storage vault is sloped to drain solution to a collection sump. All three tanks are collocated within a single vault, but two containment curbs separate the three tanks. The curbs allow for the isolation of any single tank leak should that be necessary. The volume of the secondary containment is at least 124,000 gallons (469,391 liters), which is capable of containing 100 percent of each tank's maximum design capacity. Any liquids leaked to the secondary containment can be removed from the vault or drained to the Cs product tank in the event of a system upset. Leaks are detected by a leak detector that alarms in the Central Control Room. Leak detection is supported by an annual visual inspection via a camera introduced into the vault as discussed in Addendum I, Inspection Plan. Alarms are monitored continuously in the Central Control Room during process operations; and at least daily when no process operations are occurring.

The floor of the secondary containment slopes to a sump in the corner of the containment area. An educator or a sump pump is used to transfer accumulated liquids in the secondary containment to the Cs product tank. Leak detection is supported by remote visual inspection as discussed in Addendum I, Inspection Plan.

Verification Tank. Secondary containment is provided for the verification tank by an epoxy lined containment curbing and a floor constructed of reinforced concrete. The containment is sloped to drain solution to a collection sump. The volume of the secondary containment is capable of containing at least 100 percent of the verification tank maximum design capacity. Any leaked materials to the secondary containment can be pumped or drained to the Cs product tank in the event of a system upset. Leaks are detected by a leak detector that alarms in the Central Control Room. Leak detection is supported by a daily visual inspection as discussed in Addendum I, Inspection Plan. Alarms are monitored continuously in the Central Control Room during process operations; and at least daily when no process operations are occurring.

C.3.3.3 Additional Requirements for Specific Types of Systems

This section addresses additional requirements in WAC 173-303-640 for secondary containment for ancillary equipment and piping associated with the tank systems. The secondary containment provided for the tanks and process systems also serves as secondary containment for the ancillary equipment associated with these systems.

C.3.3.3.1 Valve and Pump Pits

Secondary containment is provided for all valve, and pump pits containing ancillary piping and equipment by epoxy lined pit walls and floors constructed of reinforced concrete. The pits are sloped to drain liquids to a collection sump that can also serve to drain to lower elevation containment areas with removal of a drain plug. Therefore, each pit can either be pumped out or drained to lower level secondary containment for subsequent pump-out. Leaks are detected by a leak detector that alarms in the Central Control Room. Leak detection is supported by an annual visual inspection via a camera introduced into the pit as discussed in Addendum I, Inspection Plan. Alarms are monitored continuously in the Central Control Room during process operations; and at least daily when no process operations are occurring. The valve and pump pits include the following:

CFF pump pit, CFF valve pit, IX lead valve pit, IX lag valve pit, TWDT valve pit, Cs tank pump pit, Cs tank valve pit, IX monitoring pit, and TWDT monitoring pit.

Liquid Collection Sumps. In addition to the ability to drain each valve and pump pit, the lower elevation tank vaults can be drained to two low-points designed to collect waste from any process source. Each sump includes leak detection and an eductor for removing liquids. In the event of a significant accumulation of liquids, a pump would be installed for removal. Sources of contained liquids could include the following:

- Tank overflows
- Tanks and container rinse water
- Resin dewatering solutions
- Plant wash solutions
- Piping and valve leaks
- Sampler system drains.

C.3.3.4 Inlet and Outlet Waste Transfer Piping

All transfer lines will have secondary containment achieved through a pipe-within-pipe arrangement. These lines are as follows:

- Transfer feed line to LAWPS from DST Tank 241-AP-107 consists of a 2-inch inner line within a 4-inch outer encasement pipe
- LAWPS to DST solids return line consists of a 2-inch inner line within a 4-inch outer encasement pipe
- LAWPS to DST cesium return line consists of a 3-inch inner line within a 6-inch outer encasement pipe
- LAWPS to WTP treated LAW transfer line consists of a 3-inch inner line within a 6-inch outer encasement pipe.
- WTP-EMF to DST return line consists of a 3-inch inner line within a 6-inch outer encasement pipe. Note: This line is included in this permit application for design and construction only. Operational responsibility will be transferred to WTP via a future permit modification that will place this line within the WTP operating unit group.

All inner transfer lines are stainless steel with the outer encasement pipe being carbon steel and each line is sloped from DST to LAWPS and from LAWPS to WTP. All lines are equipped with leak detection at each end.

Leak detection equipment can continuously 'inspect' the pipelines during aqueous waste transfers. The alarms on the leak detection system are monitored in the Central Control Room and monitored continuously during waste transfers between DST to LAWPS, LAWPS to DST, and LAWPS to WTP LAW and at least daily when no transfers are occurring. A low-volume air purge of the annulus may be used to prevent condensation buildup and minimize false alarms by the leak detection system.

C.3.4 Tank Management Practices

Tank management practices addressing rupture, leakage, and corrosion prevention are discussed as follows.

Because LAWPS treats DST System aqueous supernatant with a low solids content, this feed waste stream can be managed such that erosion and corrosion is not a significant concern. Additionally, the materials of construction used in the tanks systems make it unlikely that an aqueous waste would corrode a tank.

Should a leak in the tank system be discovered, the leak is immediately stopped by isolating the leaking component. Following isolation, the requirements of WAC 173-303-640(7), incorporated by reference, are followed. These requirements include repair or closure of the tank/tank system component, and certification of any major repairs.

External corrosion protection (i.e., cathodic protection) is not required for the LAWPS tanks system as they are contained within stainless steel lined concrete vaults and are not in contact with soil or water. External corrosion protection is provided for the buried transfer lines through insulation and protective coatings.

C.3.4.1 Overfilling Prevention

Operating features and administrative controls used at the LAWPS to prevent overfilling a tank are discussed in the following paragraphs. The LAWPS process is controlled by the Monitoring and Control System (MCS). The MCS monitors liquid levels in the LAWPS tanks and is equipped with alarms that annunciate on high-liquid level to notify operators that actions must be taken to prevent overfilling of any given tank. As an additional measure to prevent a release, tanks are equipped with overflow lines that route liquids to the Cs product tank or the FFT/CFF and Cs sump pits.

The following section discusses feed systems, safety cutoff devices, bypass systems, and pressure controls for tanks and process systems.

Tanks. All tanks are equipped with liquid level sensors that give a reading of the tank liquid volume. All of the tanks are equipped further with liquid level alarms that are actuated if the liquid volume is near the tank overflow capacity.

The operating mode for Lag Storage Tanks (i.e., receiving, holding, or discharging), can be designated through the MCS, with modes switching automatically. When the high-level set point on the receiving tank is reached, flow to the tank can be stopped. In the case with lag storage tanks, once one is awaiting verification sampling, treated LAW is routed to another tank, which becomes the receiver. The full tank is switched into verification mode. The third tank is reserved for discharge mode.

Cross Flow Filtration. Both CFFs are contained within leak-tight steel casings. The differential pressure across the filters is monitored with a high differential pressure resulting in filter cleaning with chemical reagents or pulses of treated LAW that force waste back through the filter, or change out.

Ion Exchange. The two IX columns are in operation in a lead and lag configuration. When the capacity of the resin in the columns are met or exceeded, as detected by an increase in gamma radiation, the elution process is initiated to regenerate the exchange resin.

C.3.5 Labels or Signs

Each tank or process unit in the LAWPS are identified by an attached nameplate. Included on the nameplate are the equipment number and the equipment title. Those tanks that store or treat dangerous waste at the LAWPS are identified with a label, which reads *PROCESS WASTE*. Additionally, these tanks bear a legend that identifies the waste in a manner, which adequately warns employees, emergency personnel, and the public of the major risk(s) associated with the waste being stored or treated in the tank system(s). Because all LAWPS process tanks are located in below-grade shielded vaults, caution plates are placed on or near each access point (e.g., vault and pit cover blocks) to the tanks.

Caution plates are used to show possible hazards and warn that precautions are necessary. Caution signs have a yellow background and black panel with yellow letters and bear the word *CAUTION*. Danger signs show immediate danger and signify that special precautions are necessary. These signs are red, black, and white and bear the word *DANGER*.

Access to the facility is posted with black and white signs bearing the words *DANGER – UNAUTHORIZED PERSONNEL KEEP OUT*. Signs are posted at each entrance gate to the facility. Tank ancillary piping and container storage areas are also labeled to alert personnel which pipes and containers in the process area contain dangerous and/or mixed waste. Refer to Addendum E, Security Requirements, for additional information on signs and postings.

C.3.6 Management of Ignitable or Reactive Wastes in Tanks Systems

The LAWPS treats aqueous waste that does not meet the definition of a combustible or flammable liquid given in National Fire Protection Association code number 30, Flammable and Combustible Liquids Code (NFPA-30). The buffer zone requirements in NFPA-30, which require tanks containing combustible or flammable solutions be a safe distance from each other and from public way, are not

applicable. In addition, the aqueous waste is not reactive as demonstrated by LAWPS acceptance criteria in accordance with Addendum B, Waste Analysis Plan.

C.3.7 Management of Incompatible Wastes in Tanks Systems

The LAWPS treats dilute solutions of aqueous waste that is mixed prior to receipt that pose no compatibility issues. LAWPS is equipped with several systems that can adjust the pH of the waste for treatment activities. Nitric acid and sodium hydroxide are added to the process through the MCS for pH adjustment to ensure there will be no large pH fluctuations and adverse reactions in the tank systems. Sodium nitrite can be added to meet corrosion control requirements for returns to the DST System. pH controls are also necessary in order to achieve WTP LAW acceptance criteria or DST acceptance criteria for return effluent.

C.4 Organic Air Emissions Control

This section addresses the applicability to LAWPS of organic air emission standards per 40 CFR 264, Subpart AA (WAC 173-303-690) and Subpart BB (WAC 173-303-691). The requirements of WAC 173-303-690 (Subpart AA) are not applicable because LAWPS does not perform distillation, fractionation, thin-film evaporation, and air or steam stripping operations [WAC 173-303-690(1)(b)]. The requirements of WAC 173-303-691 (Subpart BB) are not applicable because aqueous waste with 10 percent or greater organic concentration is not accepted for treatment at LAWPS, as noted in Addendum B, Waste Analysis Plan [WAC 173-303-691(1)(b)].

C.4.1 Applicability of Subpart CC Standards

The air emission standards of WAC 173-303-692 (40 CFR 264, Subpart CC) apply to tank, surface impoundment, and container storage units that manage wastes with average volatile organic concentrations equal to or exceeding 500 parts per million (0.05%) by weight, based on the hazardous waste composition at the point of origination. However, waste management units that are used solely for management of mixed waste are exempt [WAC 173-303-692(1)(b)(vi)]. Since only mixed waste is managed at the LAWPS, these requirements are not applicable to LAWPS operations. In addition, tank waste is not defined as extremely hazardous waste.

C.5 Engineering Design Media

Tabular listings and copies of PE-stamped LAWPS design drawings, calculations and other documentation reflecting the initial design submitted with this application package are provided in Appendix 2.

ADDENDUM E
SECURITY REQUIREMENTS

This page intentionally left blank.

ADDENDUM E
SECURITY REQUIREMENTS

CONTENTS

E. HANFORD SITE SECURITY E.1
E.1 Signs E.1
E.2 24-Hour Surveillance System E.1
E.3 Artificial or Natural Barriers E.1
E.3.1 Yakima, Wye, and Rattlesnake Barricades E.1
E.3.2 Perimeter and Area Fences E.1
E.3.3 Columbia River E.2
E.4 Hanford Facility Security E.2
E.4.1 Unit Specific Security E.3
E.5 Security E.3

This page intentionally left blank

E. HANFORD SITE SECURITY

Security measures are used to control access to the active portions of the Hanford Facility, as defined by Washington Administrative Code (WAC) 173-303-040, in accordance with Hanford Facility Permit Condition II.L. The Hanford Facility is a controlled access area. The signs, 24-hour surveillance system, and barriers are used to provide security and control access to the Hanford Facility. Active portions of the Hanford Facility are located within, or near, the 200 Area Central Plateau, and the 300 and 400 areas (refer to Hanford Facility topographic map). These areas are subject to 24-hour surveillance, including video monitoring and security patrols. The security measures listed below prevent the unknowing entry, and minimize the possibility for the unauthorized entry, of persons or livestock onto active portions of the Hanford Facility (WAC 173-303-310).

- Signs
- 24-Hour Surveillance System
- Artificial or Natural Barriers
- Hanford Facility Security
- Unit Group Security

E.1 Signs

Signs prevent the unknowing entry, and minimize the possibility for the unauthorized entry, onto active portions of the Hanford Facility (WAC 173-303-310(2)(a)). Signs posted around the perimeter of the facility bear the legend, "No Trespassing. By order of the Department of Energy". The "No Trespassing" signage is also posted around the 200, 300 and 400 areas. These signs are posted every 500 feet (152 meters). Warning signs posted for operating unit groups bear the legend, "Danger-Unauthorized Personnel Keep Out," or an equivalent legend, written in English, and are legible from a distance of at least 25 feet (7.6 meters). Such warning signs are posted at entrance points to the active portions of operating unit groups. Large warning signs along the Columbia River shoreline near the 100 Area surplus reactors are written in English and Spanish.

E.2 24-Hour Surveillance System

24-hour surveillance is conducted at the Hanford Facility level, and monitors and controls entry onto the Hanford Facility. This system is comprised of video surveillance equipment and security patrols. The 24-hour surveillance system also provides protection of government property, classified information, and special nuclear materials.

E.3 Artificial or Natural Barriers

Authorized access to active portions of the Hanford Facility is controlled through gates or other entrances at all times, as described in the Hanford Facility Permit Attachment 3, Security, which includes access prevention from the Columbia River. Additional means to control access (e.g., fences, locked gates, buildings with locked doors) to active portions are discussed in unit group addenda.

E.3.1 Yakima, Wye, and Rattlesnake Barricades

Vehicular access to roads leading to the active portions of the Hanford Facility located in the 200 Areas is controlled through entrance points at the Yakima, Wye, and Rattlesnake Barricades, which are posted with warning signs. These barricades are controlled on a continuous or as needed basis by Hanford Patrol. When these barricades are not manned the gates are secured to prevent access.

E.3.2 Perimeter and Area Fences

The Hanford Facility perimeter fence is installed that extends approximately 32 miles from the northwest corner of the Hanford Facility, where the facility meets with the Columbia River at the Vernita Bridge, to the southeast corner of the facility near Stevens Road. The perimeter fence is constructed of steel fence posts strung with barbwire. This fence provides a barrier to vehicle access on the west and south portion

of the Hanford Facility. All other unimproved vehicle access roads along the facility boundary are controlled by locked vehicle access gates combined with the Hanford Facility perimeter fence.

In addition to the perimeter fence, area fences located inside the boundary of the Hanford Facility are installed around the 200 East, 200 West, 300, and 400 areas.

The 200 East and 200 West areas are each surrounded by an area fence. Many of the active portions of the Hanford Facility are located within the 200 area fences. The area fences are a minimum six feet high chain link fencing that may be topped with barbed wire in certain places. Access through the 200 area fences is provided only at a limited number of entrances.

In the 300 area, a perimeter fence surrounds the majority of the area with limited entrance points. Most of the fence is six feet high chain link fencing, with the exception of the north east corner where a portion of the chain link fencing has been removed and replaced with metal posts with a single wire strand. In the 400 area, a perimeter fence surrounds the entire area with secured entrance points. This fence is six feet high chain link fencing with triple strand barb wire on top.

E.3.3 Columbia River

The facility is bordered by the Columbia River, a prominent surface water feature that covers approximately 44 miles (71 kilometers) of the facility boundary from the northwest corner to the southeast corner of the facility. Unknowing entry to the Hanford Facility from the Columbia River is prevented through the posting of numerous "No Trespassing" signs along the river shoreline, and the large warning signs along the shoreline near the 100 Area surplus reactors.

E.4 Hanford Facility Security

The Hanford Patrol maintains a continuous presence of security personnel. Hanford Patrol is comprised of highly trained security personnel that are present at the facility 24 hours a day, 7 days a week, including holidays. Hanford Patrol monitors access to, and exit from the Hanford Facility and provide security measures throughout the Hanford Facility.

The Benton County Sheriff Office (BCSO) provides law enforcement for the Hanford Facility, including enforcement of traffic laws and automobile accident investigations. Activities of the BCSO include periodic overflights of Hanford by BCSO aircraft, Columbia River patrol by watercraft, K9 units for narcotics detection operations, and warrant service. The detective and deputies of the BCSO also investigate property crimes involving theft of government and personal property on the Hanford Facility.

All personnel accessing locations on the Hanford Facility must possess and display a United States Department of Energy approved security badge indicating the appropriate access authorization. All personnel entering or exiting the Hanford Facility are subject to random security badge inspections by Hanford Patrol to validate access authorization. All vehicles and hand-carried items entering or exiting the Hanford Facility are subject to random inspections and searches by Hanford Patrol to preclude the unauthorized introduction of prohibited/controlled articles, or the unauthorized removal of government or contractor assets.

Employees at the Hanford Facility are trained and have the responsibility to assist in maintaining access control on the facility. In general, this includes, restricting access to authorized personnel only (e.g., challenging personnel without a security badge and making sure entrances are secured after entry and exit). Employees receive annual training on individual requirements to maintain security on the Hanford Facility as part of the general facility training required by Hanford Facility Permit Condition II.C.

E.4.1 Unit Specific Security

The LAWPS is operated to minimize exposure of the general public and operating personnel to dangerous waste associated with active portions of the facility. Active portions of the facility include the tank treatment and storage systems located within underground vaults and pump pits (to include ancillary equipment) and the spent resin load-out and maintenance area within the above ground portion of the main processing building. The balance of facility structures and equipment are considered inactive in accordance with WAC 173-303-040. Only those individuals with training qualifications in accordance with Addendum G are allowed unescorted access into active areas.

E.5 Security

The LAWPS is located within the 200 Area of the Hanford Facility and access is controlled by a physical barrier. The physical barrier consists of a chain link fence with four secured gates that surround the facility. Signs stating *Danger-Unauthorized Personnel Keep Out*, legible at 25 feet or more, are posted at each of four gates; two entering from the north and two entering from the west. In addition, a sign is posted on the south and east fence lines satisfying the requirement to be visible from any angle of approach and at the entrances to each active portion of the facility, which complies with WAC 173-303-310(2)(a) and WAC 173-303-310(2)(c). Warning sign locations are as follows:

- Gates 1 through 4 – 1 sign each
- South fence line – 1 sign
- East fence line – 1 sign

These features, both the secured physical barrier and warning signs, serve to prevent unauthorized and unknowing entry into dangerous waste management units in accordance with the requirements of WAC 173-303-310(1). Vehicle gates and all entrances to active areas remain secured during process operations. In the event of an unauthorized or unknowing entry, facility operations will be notified.

Because LAWPS employs use of a unit specific physical barrier, a 24-hour surveillance system is not required as consistent with WAC 173-303-310(2). Hanford Patrol provides 24-hour surveillance on a site wide basis in accordance with Hanford Facility Permit Attachment 3.

This page intentionally left blank.

ADDENDUM F
PREPAREDNESS AND PREVENTION

This page intentionally left blank.

ADDENDUM F
PREPAREDNESS AND PREVENTION

CONTENTS

F. PREPAREDNESS AND PREVENTION F.1

F.1 Preparedness and Prevention Requirements F.1
F.1.1 Equipment Requirements F.1
F.1.2 Aisle Space Requirement F.2

F.2 Preventive Procedures, Structures, and Equipment F.2
F.2.1 Unloading Operations, Spill Prevention, and Control F.2
F.2.2 Run-on F.2
F.2.3 Water Supplies F.2
F.2.4 Equipment and Power Failure F.2
F.2.5 Personnel Exposure F.3

F.3 Prevention of Reaction of Ignitable, Reactive, and Incompatible Waste F.3

This page intentionally left blank.

F. PREPAREDNESS AND PREVENTION

F.1 Preparedness and Prevention Requirements

The following sections document the preparedness and prevention measures taken at LAWPS.

F.1.1 Equipment Requirements

The following sections describe the internal and external communications systems and the emergency equipment required that could be activated by the LAWPS Building Emergency Director (BED) or other LAWPS personnel as necessary. Personnel have immediate access communications systems and emergency equipment during waste processing operations.

F.1.1.1 Internal Communications

Internal communication systems are used to provide immediate emergency instruction to personnel in the LAWPS. Communication systems include both personal equipment, such as two-way radios and cell phones, and facility alarms.

When operators are present at the LAWPS, the operators carry two-way radios to maintain contact with personnel. The operators at LAWPS are informed of emergencies (e.g., building and/or area evacuations, take-cover events, high airborne contamination, fire, and/or explosion), and are provided with emergency instructions by mobile two-way radios and telephones.

LAWPS alarms provide immediate notice of emergency conditions to facility personnel and include those for fire, leak detection, and process abnormal conditions (e.g. tank overfill or automatic shutdown). Fire alarms are located throughout occupied portions of the facility and alarms associated with process operations annunciate in the central control room. Certain alarm activation results in notification to the Building Emergency Director. Additional detail regarding emergency response can be found in Addendum J, Contingency Plan.

F.1.1.2 External Communications

The LAWPS and its operators are equipped with devices for summoning emergency assistance from the Hanford Fire Department, the Hazardous Materials Response Team, and/or Hanford patrol, as necessary. External communication to summon emergency assistance is made by a normal telephone system or mobile two-way radios. The LAWPS uses fire alarm pull boxes and telephones (fixed or mobile) for external communication and are located at numerous locations throughout the LAWPS.

F.1.1.3 Emergency Equipment

The LAWPS relies primarily on the Hanford Fire Department to respond to fires and other emergencies as described in Hanford Facility Permit Attachment 4, *Hanford Emergency Management Plan*, (DOE/RL-94-02). The Hanford Fire Department provides all the necessary equipment and personnel to respond to emergencies. All LAWPS operators are familiar with the LAWPS contingency plan (Addendum J) and are trained in the use of emergency LAWPS systems, response to fires, and use of communications equipment.

Portable fire extinguishers, fire control equipment, spill control equipment, and decontamination equipment are available at locations identified in the LAWPS contingency plan (Addendum J). Addendum J provides additional detail on specific emergency equipment types and capabilities.

The LAWPS has fire extinguishers, automatic fire suppression systems, fire alarm pull boxes, and a sprinkler system. The type of dangerous waste managed in LAWPS does not require use of specialized extinguishing equipment.

Hazardous material protective gear and special work procedure clothing for the LAWPS personnel are kept in the change room. Safety showers are located in convenient locations throughout LAWPS, and emergency eyewashes are available for use. Water for these devices is supplied from the sanitary water system.

F.1.1.4 Water for Fire Control

A water main is not provided to the LAWPS. The Hanford Fire Department is equipped with fire engines for control of fires requiring high water volume and pressure. Connections from the raw water system supply fire hydrants and the wet pipe sprinkler system. In the event that water pressure is lost, the Hanford Fire Department is equipped with fire engines to provide needed water.

F.1.2 Aisle Space Requirement

The operation of the LAWPS does involve container accumulation and storage subject aisle spacing requirements of WAC 173-303-630(5)(c). Nevertheless, the LAWPS is easily accessible to emergency response personnel and vehicles [WAC 173-303-340(3)]. LAWPS is bordered by two roads; WTP Loop Road, and 4th Street Extension. This allows access by emergency responders through four separate gates.

Equipment spacing at LAWPS is sufficient to allow the movement of personnel and fire protection equipment in and around occupied portions of the facility. The facility general arrangement and layout also meets the requirements of the National Fire Protection Association for the protection of personnel and the environment.

F.2 Preventive Procedures, Structures, and Equipment

The following sections describe preventive procedures, structures, and equipment.

F.2.1 Unloading Operations, Spill Prevention, and Control

Underground pipelines that transfer aqueous waste to and from the LAWPS are encased in a secondary pipe. If a leak is detected in a pipeline, flow in the pipeline will be stopped and the cause of the leak investigated and remediated. A more complete discussion of secondary containment is found in Addendum C.

The LAWPS tank systems are monitored continuously during tank-filling and processing operations and filling and/or processing is stopped immediately if leaks occur.

Care is taken to ensure that even minor leaks are cleaned up immediately and disposed of in accordance with approved management procedures. Any spill that is determined to be a dangerous waste will be managed according to the requirements of WAC 173-303.

F.2.2 Run-on

As a tank storage and treatment system designed with secondary containment and leak detection systems [WAC 173-303-640(4)(e)(ii)], the LAWPS is designed and operated to prevent run-on on infiltration of precipitation into the secondary containment system.

F.2.3 Water Supplies

The LAWPS uses operating practices, structures, and equipment to prevent the contamination of natural water supplies (i.e., groundwater and surface water). The LAWPS is monitored continuously during liquid waste transfers and at least daily at other times to detect abnormal conditions (e.g., leaks), and inspected according to Addendum I, Inspection Plan, to detect equipment and structural deteriorations that could allow possible water supply contamination. Addendum J, Contingency Plan, provides information on procedures that are implemented if a release is detected at the LAWPS.

There are no drinking water wells near the LAWPS. Therefore, a release would not immediately contaminate drinking water supplies.

F.2.4 Equipment and Power Failure

The storage function of the LAWPS is not affected by loss of power and a temporary loss of power would not pose a threat to the environment. Loss of electrical power would not cause the storage of the waste to be jeopardized.

The LAWPS does have a standby power source provided by two diesel generators to power the STES. Power to selected lighting, computers, and process controls is configured with an uninterruptible power supply. During partial loss of normal power, the effected pumps and subsystems will be shut down. Complete loss of power to the LAWPS shuts down the entire LAWPS except for the instruments in the control room connected to the uninterruptible power supply and STES powered by the backup emergency diesel generators.

When power at the LAWPS is lost, the valves assume a fail-safe position to allow the process to remain in a safe shutdown mode until restoration of power. This action allows the operators to investigate and confirm that there are no safety issues because the LAWPS is shut down.

A combination of reliability, redundancy, maintenance, and repair features are used in the LAWPS equipment and systems to minimize random failure of equipment. For crucial systems such as ventilation filters, redundant trains are provided to mitigate equipment and system failure. Spare parts are maintained for essential production and safety equipment.

F.2.5 Personnel Exposure

At the LAWPS, operating practices, structures, and equipment are used to prevent undue exposure of personnel to dangerous and/or mixed waste. All operations are conducted so that exposure to dangerous and/or mixed waste and hazardous materials are maintained As-Low-As-Reasonably-Achievable, which are supported by largely automated and remotely operated systems.

Protective clothing and equipment are prescribed for personnel handling chemicals or dangerous waste. Before the start of any operation that could expose personnel to the risk of injury or illness, a review of the operation is performed to ensure that the nature of hazards that might be encountered is considered and appropriate protective gear is selected. Personnel are instructed to wear personal protective equipment in accordance with training, posting, and work instructions.

Whenever possible, exposures to hazards are controlled by accepted engineering and/or administrative controls. Protective gear is used where effective engineering or administrative controls are not feasible.

F.3 Prevention of Reaction of Ignitable, Reactive, and Incompatible Waste

LAWPS does not accept or manage ignitable, reactive, or incompatible waste. Therefore, the requirements of WAC 173-303-806(4)(c)(x), WAC 173-303-640(9) and (10), and WAC 173-303-395(1) do not apply.

This page intentionally left blank.

ADDENDUM G
PERSONNEL TRAINING

This page intentionally left blank.

ADDENDUM G
PERSONNEL TRAINING

CONTENTS

G. PERSONNEL TRAINING G.1

G.1 Description of Training Plan G.1

TABLES

Table G.1. LAWPS Training Matrix G.2

This page intentionally left blank.

G. PERSONNEL TRAINING

Specific requirements for the Hanford Facility Personnel Training program are described in Hanford Facility Permit Attachment 5. The Permittees will comply with the training matrix below which provides training requirements for Hanford Facility personnel associated with the Low-Activity Waste Pre-Treatment System (LAWPS). The LAWPS training program and training plan have not been developed at this time and this addendum will require a revision and update when documentation has been developed and is available. At that time, a copy of the LAWPS Dangerous Waste Training Plan will be placed in the Hanford Facility Operating Record, LAWPS unit-specific portion, and will be updated as unit-specific conditions change. Training received by LAWPS personnel will be commensurate with the duties they perform. Individuals are not required to receive training for work/duties they do not perform.

Waste management duties include those specified in Attachment 5 of the Hanford Facility Resource Conservation and Recovery Act Permit as well as those contained in WAC 173-303-330(1)(d). Training elements of WAC 173-303-330(1)(d) applicable to the LAWPS operations include the following:

- Procedures for using, inspecting, and replacing emergency and monitoring equipment
- Key parameters for automatic waste feed cut-off systems
- Communications or alarm systems
- Response to fires or explosions
- Shutdown of operations.

G.1 Description of Training Plan

In accordance with Hanford Facility Permit Condition II.C.3, the unit-specific portion of the Hanford Facility Dangerous Waste permit application must contain a description of the training plan. Training plan documentation is maintained outside of the Hanford Facility Dangerous Waste Part B permit application and the Permit.

Therefore, changes made to the training plan documentation are not subject to the Permit modification process. However, the training plan documentation is prepared to comply with WAC 173-303-330(2).

Documentation prepared to meet the training plan requirement consists of hard copy and/or electronic media as provided by Hanford Facility Permit Condition II.C.1. The training plan documentation consists of one or more documents and/or a training database with all the components identified in the core document.

A description of how training plan documentation meets the three items in WAC 173-303-330(2) is as follows:

1. -330(2)(a): "The job title, job description, and name of the employee filling each job. The job description must include requisite skills, education, other qualifications, and duties for each position."

   Description: The specific Hanford Facility personnel job title/position is correlated to the waste management duties. Waste management duties relating to WAC 173-303 are correlated to training courses to ensure training is properly assigned.

   A listing of Hanford Facility personnel who carry out job duties relating to TSD unit waste management operations at the LAWPS are maintained. Individuals who are not performing duties of the Dangerous Waste Worker Category identified in Table G.1 due to reassignment, medical restriction, or other limiting factors do not require current training for that category. These individuals must complete the required training for the Dangerous Waste Worker Category prior to resuming duties associated with that category.

Information on requisite skills, education, and other qualifications for job titles/positions are addressed by providing a reference where this information is maintained (e.g., human resources). Specific information concerning job title, requisite skills, education, and other qualifications for personnel can be provided upon request.

2. -330(2)(b): "A written description of the type and amount of both introductory and continuing training required for each position."

   Description: In addition to the outline provided in Hanford Facility Attachment 5, Section 5.1, training courses developed to comply with the introductory and continuing training programs are identified and described in the training plan documentation. The type and amount of training is specified in the training plan documentation as shown in Table G.1.

3. -330(2)(c): "Records documenting that personnel have received and completed the training required by this section. The Department may require, on a case-by-case basis, that training records include employee initials or signature to verify that training was received."

   Description: Training records are maintained consistent with Hanford Facility Permit Attachment 5, Section 5.3. Training received by facility personnel will be commensurate with the duties they perform. Individuals are not required to receive training for work/duties they do not perform.

Table G.1. LAWPS Training Matrix

	Training Category				
Attachment 5 Training Category	**General Hanford Facility Training**	**Contingency Plan Training**	**Emergency Coordinator Training**	**Operations Training**	
Operating Unit 1: LAWPS	**Orientation Program**	**Emergency Hazards Check List**	**Building Emergency Training**	**General Waste Management**	**Tank System Management**
Dangerous Waste Worker Categories					
Waste Worker	X	X	X	X	X
Waste Worker Supervisor/ Manager	X	X	X	X	
Advanced Waste Worker	X	X	X	X	
Building Emergency Director	X	X	X		

ADDENDUM H
CLOSURE PLAN

This page intentionally left blank.

ADDENDUM H
CLOSURE PLAN

CONTENTS

H. CLOSURE PLAN H.1
H.1 Closure Plan H.2
H.2 Dangerous Waste Management Units H.2
H.3 Closure Performance Standard H.2
H.3.1 Closure Standards for Metal Surfaces, Tanks, Concrete, and Container Storage Areas H.2
H.3.2 Closure Standards for Piping and Ancillary Equipment H.3
H.3.3 Closure Standards for Underlying Soils H.3
H.4 Closure Activities H.4
H.4.1 General Closure Activities H.4
H.4.2 Constituents of Concern for Closure for the Low-Activity Waste Pre-Treatment System H.5
H.4.3 Removing Dangerous Waste H.5
H.5 Maximum Waste Inventory H.7
H.6 Closure of Tanks H.7
H.7 Schedule for Closure H.7

This page intentionally left blank.

H. CLOSURE PLAN

The LAWPS will provide treatment and storage of DST tank waste that will be transferred to the WTP LAW facility. The LAWPS facility will employ a cross-flow filtration (CFF) system to separate the solids from the liquid phase and an ion exchange (IX) system to remove soluble radioactive cesium (Cs) from the filtered liquid. In addition, the facility will have tanks, associated tank systems, transfer lines, and treatment capacity to remove Cs. Once Cs has been removed, the resulting liquid waste stream will be stored in lag tanks located within the LAWPS Facility. At the lag storage tanks, the waste is sampled to confirm it is suitable feed prior to being transferred to the WTP LAW Facility for vitrification. Waste will be transferred via in-ground, double-walled, waste transfer lines from the 241-AP Tank Farm. Both the solids removed by the CFF system and the Cs removed by the IX system are accumulated for transfer back to the DST system. Tank storage and treatment systems will be constructed below grade. Other support facilities and operations will be located above ground. An estimated 19,550 tons of waste feed will be processed by the LAWPS Facility annually. The total combined tank storage capacity at any given time is a nominal 415,610 gallons. In addition, the LAWPS Staging, Maintenance, and Laydown Area and Spent Resin Handling Area will store secondary solid waste in containers for an estimated 55,280 pounds of mixed waste debris and spent resin annually. Refer to Addendum A, Part A for additional details.

Tanks subject to closure performance standards include:

- Filter Feed Tank
- Treated Waste Delay Tank
- Cesium Product Tank
- Lag Storage Tank 1
- Lag Storage Tank 2
- Lag Storage Tank 3
- Verification Tank.

Primary process and ancillary equipment subject to closure performance standards include:

- Cross Flow Filters (2)
- Ion Exchange Columns (2)
- Ancillary pumps and valves
- Tank vault and valve/pump pits (to include secondary containment liners)
- All interconnecting and ancillary dangerous waste process piping
- Spent resin handling area
- Staging, maintenance, and laydown area.

Container storage areas subject to closure performance standards include:

- Staging, Maintenance, and Laydown Area
- Spent Resin Handling Area (includes container treatment).

Refer to Permit Addendum C, Process Information, for additional details regarding LAWPS tank storage and treatment systems and container storage and treatment areas.

Activities necessary to achieve clean closure will include a combination of physical removal of tanks and equipment (as necessary), and decontamination of secondary containment and concrete structure surfaces. An exact determination regarding the application of removal and/or decontamination activities can only be determined following completion of facility operations. A complete facility characterization at time of closure and knowledge of past operations is necessary to determine whether upset conditions resulted in a spread or release of dangerous waste constituents (to include underlying soils) or whether process operations were modified and resulted in a reconfiguration of system components and means of operation.

This Addendum H, Closure Plan will be revised as necessary at time of closure in accordance with WAC 173-303-830. The following addendum sections describe the planned activities and performance standards for closing LAWPS dangerous waste management units.

H.1 Closure Plan

The Permittees must close dangerous waste management units in the operating unit group 1 that are subject to closure, in accordance with this Addendum H, Closure Plan. The LAWPS will be closed by removal or decontamination with respect to dangerous waste contamination that resulted from operation. To facilitate closure of LAWPS, the LAWPS is comprised of three dangerous waste management units (DWMUs). Closure of LAWPS will begin after the operational life in support of the Direct Feed Low Activity Waste program is completed. If at the time of closure it is determined that closure by removal or decontamination (i.e., clean closure) pursuant to WAC 173-303-640(8)(a) is not possible, the Permittees will prepare a post closure plan and submit a permit modification to establish Addendum K, Post Closure.

Uncontaminated and/or clean closed structures may be left for future use or disassembled, dismantled, and removed for disposal. This determination will be made by the U.S. Department of Energy, Office of River Protection. Uncontaminated equipment and structures could include aqueous makeup, nonradiological HVAC, piping, steam condensate and cooling water piping, and the control room and office areas.

Closure requires decontamination or removal and disposal of all dangerous waste, waste residues, contaminated equipment, soil, or other material established in accordance with the removal or decontamination closure performance standards of WAC 173-303-610(2). Because of the radiological nature of LAWPS operations, it is anticipated the significant majority of waste generated during closure will be mixed waste that is treated, stored, and disposed of on the Hanford Site. This plan and any necessary future closure plan revisions will provide for compliance with these performance standards.

H.2 Dangerous Waste Management Units

The LAWPS consists of three dangerous waste management units; the integrated tank treatment and storage system, the staging, maintenance and laydown container storage area, and the spent resin handling container storage and treatment area. Refer to Addendum A, Part A, for figures depicting the three dangerous waste management units and additional detail regarding their process design capacities and estimated annual quantity of waste.

This plan addresses closure of all three dangerous waste management units. Following closure, there will be no other portion of the LAWPS managing mixed waste.

H.3 Closure Performance Standard

Closure by removal or decontamination, as provided for in this plan based on the requirements of WAC 173-303-610(2), will be protective of human health and the environment by removing or reducing chemical contamination at LAWPS to levels that are below concern with respect to human health and the environment. Closure standards will apply to all three LAWPS DWMUs.

This plan proposes to leave clean structures and equipment in place after closure for potential use in future Hanford operations. This need will be evaluated at the time of closure.

H.3.1 Closure Standards for Metal Surfaces, Tanks, Concrete, and Container Storage Areas

This closure plan proposes use of a 'clean debris surface' (defined in the following paragraph) or physical removal as the clean closure performance standard for the metal surfaces (including secondary containment liners), tanks, and concrete that will remain after closure. This approach is consistent with Ecology guidance (Publication #94-111, Ecology 2005) for achievement of clean closure. Additionally,

adherence to this guidance ensures that all residues have been removed as required by WAC 173-303-640 for closure of the LAWPS tank systems.

A visual inspection will be performed on all surfaces, to include internal components of tanks, in order to determine if a "clean debris surface" exists or if decontamination is necessary to achieve this standard.

Should decontamination be required, standard techniques will be employed to decontaminate surfaces. Techniques can include, but are not limited to; water flush/rinse, chemical flush/rinse, and mechanical removal. Common mechanical means of decontamination include, but are not limited to; brushing, wiping, scraping, grinding, and blasting. The type and configuration of the surface will influence the decontamination method used.

The clean debris surface standard is verified visually. *A clean debris surface means the surface, when viewed without magnification, shall be free of all visible contaminated soil and hazardous waste except residual staining from soil and waste consisting of light shadows, slight streaks, or minor discolorations and soil and waste in cracks, crevices, and pits may be present provided that such staining and waste and soil in cracks, crevices, and pits shall be limited to no more than 5% of each square inch of surface area* (40 CFR 268.45).

When a physical extraction method is used on concrete, the performance standard is based on removal of the contaminated layer of debris. The physical extraction performance standard for concrete is removal of 0.6 centimeter of the surface layer and treatment to a clean debris surface. Inspections to verify achievement of a clean debris surface will be performed and documented.

Physical removal will consist of disjoining and hoisting tanks, ancillary equipment, piping and other facility components from their location within process areas. Removed debris will be characterized and packaged for transport, treatment, storage, and/or disposal in accordance with WAC 173-303. Following debris removal, underlying surfaces (e.g., secondary containment or concrete) will be inspected as discussed immediately above to determine whether additional decontamination or removal is required. This process may be repeated until clean closure performance standards are met.

H.3.2 Closure Standards for Piping and Ancillary Equipment

The internal and external piping of LAWPS that has contacted dangerous waste will be flushed and drained as part of closure. External piping includes the waste feed line to LAWPS, waste return lines back to the DST system, and the treated waste transfer to WTP LAW. When practical, ancillary equipment, which has contacted dangerous waste will also be flushed and drained. For piping and ancillary equipment where the contaminated surfaces can be inspected, an inspection will be performed to see if the surfaces meets the clean debris surface standard in 40 CFR 268.45, incorporated by reference by WAC 173-303-140, and can be declared non-dangerous in accordance with WAC 173-303-071(3)(qq). If it is not possible to inspect the contaminated surfaces or meet the clean debris surface performance standard, the particular piping or ancillary equipment of concern will be removed, designated, and disposed of accordingly.

Dangerous and/or mixed-waste materials generated during closure activities will be managed in accordance with WAC 173-303-610(5). Removal of any dangerous wastes or dangerous constituents during partial or final closure will be handled in accordance with applicable requirements of WAC 173-303-610(5).

H.3.3 Closure Standards for Underlying Soils

Clean closure of soil under the LAWPS will be accomplished by demonstrating that the lined floors and vaults kept contaminants from reaching the soil. Lined floors and vaults provided secondary containment for all tanks and process piping except that entering the facility from the DST System or those leaving the facility either back to the DST System or as feed to WTP LAW. Unless inspections identify potential through-thickness cracks indicating containment failure and a subsequent potential for soil contamination from TSD unit operations, the soil will be considered clean closed. However, if inspections identify such

cracks and there have been documented spills in the vicinity, potential soil contamination will be investigated. Soils will be sampled and analyzed for constituents of concern according to the sampling and analysis plan. The sampling and analysis plan will be prepared following the completion of a data quality objectives process in accordance with EPA/600/R-96/055 (QA/G-4), *Data Quality Objectives Process*, as amended. The data quality objectives process will be initiated prior to closure on a schedule to ensure timely closure of LAWPS. The sampling and analysis plan will be submitted to Ecology as part of a permit modification request meeting the requirements of WAC 173-303-830. The sampling and analysis plan will be prepared consistent with EPA/240/B-01/003 (EPA/QA R-5), *EPA Requirements for Quality Assurance Project Plans*, as amended. Because information supporting development of a sampling and analysis plan is unavailable at this time, the closure plan will have to be updated to address any dangerous waste contamination that may have escaped secondary containment and were released to underlying soils.

If the soil analytical results determine that the constituents of concern are at or below the levels in WAC 173-303-610(2)(b)(i), or background levels in the Hanford soil if background is greater, the soil will be considered clean closed. If the constituents of concern exceed background levels, the soil will be closed per the standards of WAC 173-303-610(2)(b).

H.4 Closure Activities

The LAWPS is designed for a 40-year active life with anticipated duration of operations being within that timeframe. At the time of closure, the closure plan will be modified as necessary to reflect current regulation or informational revisions in accordance with WAC 173-303-610(3)(b). If it is determined that clean closure is not possible, the closure plan will be modified to address required post closure activities.

H.4.1 General Closure Activities

The approach to closing LAWPS DWMUs is to process aqueous waste through the system to the maximum extent practical prior to shut down. Any remaining waste residues, which cannot be run through LAWPS as the dangerous waste management units are being closed, will be managed in accordance with WAC 173-303. Following shutdown, the facility DWMUs will be characterized to determine the nature and extent of residual dangerous waste contamination. Characterization will include a combination of visual inspection, radiological surveys, and sampling as necessary. Characterization results will guide specific closure activities.

Decontamination may involve rerouting temporary installation of piping to allow the isolation of tanks and ancillary equipment for draining, flushing, decontamination, and closure. Rerouted and temporary piping will be closed in the same manner as process piping. All structures and equipment will be decontaminated to the closure standards in Section H.3 or disposed. Piping associated with LAWPS closure is intended to be decontaminated, drained, and inspected. Piping that meets the closure standard in Section H.3.2. will be left in place. Piping that does not meet the closure standard, or cannot be inspected, will be removed and disposed of accordingly. Contamination, if present, will be managed in compliance with regulatory requirements. In addition, all containerized dangerous waste will be removed from the facility and disposed of as well.

Equipment or materials used in performing closure activities will be decontaminated or disposed at a permitted facility. Controls will be implemented during closure activities that prevent the release or spread of dangerous waste constituents in accordance with WAC 173-303-610(a)(vi). Controls will address the potential for run-on or runoff from the dangerous waste management units undergoing closure. Dangerous waste will be packaged in containers and accumulated in accordance with all applicable provisions of WAC 173-303. Any necessary treatment will be performed on or off-site as necessary to satisfy disposal criteria. Groundwater monitoring and leachate collection are not anticipated to be necessary as it is intended to clean close the LAWPS.

H.4.2 Constituents of Concern for Closure for the Low-Activity Waste Pre-Treatment System

Using the list of dangerous waste numbers in the Addendum A, Part A Form, process knowledge and the risk to human health and the environment, the constituents of concern for closure will be determined through the data quality objective process and addressed as part of the Closure Performance Standards.

Arsenic and beryllium will be excluded because they are present in Hanford soils and may therefore give a false positive sample result.

H.4.3 Removing Dangerous Waste

All of the aqueous waste inventory at the LAWPS will be processed to the maximum extent possible before closure. Any residue remaining in piping or equipment will be removed by flushing and/or decontamination. For residues remaining in piping and equipment where it is not possible or practical to decontaminate, those facility components will be removed, treated if necessary, and disposed of. All containerized waste will be dispositioned in accordance with WAC 173-303.

This section discusses the activities necessary to implement a clean closure strategy for the LAWPS.

H.4.3.1 Tanks

The following general steps will be performed to close each LAWPS tank and ancillary equipment:

- Wastewater and chemical additions to the tank will be isolated or rerouted to a downstream tank.
- Piping and ancillary equipment associated with the tank will be flushed with water and drained to the tank being closed, to another tank, or to containers.
- Wastewater will be removed from the tank and transferred to another tank. Additional pumps and piping may be installed to empty the tank as low as possible.
- All remaining residue at the bottom of the tank will be removed and transferred to another tank or containers. Rinsing may be performed to facilitate removal of residue.
- An initial visual inspection of the tank's interior and exterior surfaces will be performed to determine the type of flushing that will allow the tank to be clean closed, or whether the tank cannot be clean closed.
- The tank's surfaces, piping and ancillary equipment will be cleaned by chemical or physical extraction techniques described in 40 CFR 268.45. Flush solution will be transferred to another tank or containers. All flush solution at the bottom of the tank will be removed before visual inspection.
- The tank, piping, and ancillary equipment will be inspected visually for compliance with the performance standard in Sections H.3.1 and H.3.2.

After rinsing, the tanks will be inspected visually for compliance with the performance standard. Visual inspection might be made remotely using a camera or other device that allows verification of meeting the performance standard. If any areas are found not meeting the clean debris surface performance standard, these areas will be decontaminated in-place, or the contaminated portions will be removed, designated, and disposed accordingly. Per 40 CFR 268.45, Table 1 incorporated by reference at WAC 173-303-140, only removal of contaminants from the surface layer is necessary for metal surfaces.

The outside of the tanks also will be inspected for compliance to the performance standard. Any areas found not to meet this performance standard will be decontaminated in-place, or the contaminated portions will be removed, designated, and disposed accordingly. Before using decontamination solutions on the outside of the tanks, the liner will be inspected for cracks or other openings that could provide a pathway to the underlying concrete and/or soil. This inspection will be performed as described in Section H.3.3 in conjunction with mapping of potential through-thickness cracks. Any such cracks will

be mapped. The cracks will be sealed before beginning treatment or other engineered containment devices (e.g., portable catch basins, liners) will be used to collect and contain solutions.

Decontamination residues will be collected, designated, and managed as appropriate. If it is not possible to meet the clean closure performance standard, contaminated portions of the tanks could be removed, designated, and disposed of accordingly. The inspections for a clean debris surface will be documented on an inspection record.

H.4.3.2 Internal and External Piping and Ancillary Equipment

The internal piping and ancillary equipment for LAWPS, which have contacted dangerous waste will be flushed and drained as part of closure. Any treatment media, such as filters and ion exchange resins will be removed from the ancillary equipment, and disposed of accordingly. Where the contaminated surfaces can be inspected, an inspection will be performed to see if the piping and ancillary equipment meet the clean debris surface standard in 40 CFR 268.45 and can be declared non-dangerous. If it is not possible to meet the clean debris surface standard or the piping or ancillary equipment cannot be inspected, those portions of the piping and ancillary equipment will be removed, designated, and disposed of accordingly.

External piping (waste feed, return, and transfer lines) associated with LAWPS consist of below grade and above grade piping. Below grade, piping will be dispositioned at closure consistent with the practices for below grade piping in the 200 Areas at the time of closure consistent with surrounding operable unit decisions. Above grade piping will be dispositioned consistent with the provisions for internal piping.

Rinsate from the LAWPS piping will be processed through and on-site TSD unit or an offsite TSD facility. Dangerous and/or mixed-waste solutions and materials generated during closure activities, which cannot be treated will be managed in accordance with WAC 173-303-610(5).

H.4.3.3 Concrete

Closure of concrete at LAWPS will be performed in conjunction with the associated tanks, piping, ancillary equipment, and container storage areas closure. Based on design of the secondary containment liners over the concrete, unless the liner shows signs of failure, the concrete is presumed to be considered clean closed. If there is a suspected failure of the liner, the concrete will be inspected visually and surveyed before any decontamination is considered. The purpose of the inspection will be twofold: to identify and map any cracks in the concrete that might have allowed contaminants a pathway to the soil below (Section H.3.3.), and to identify areas that potentially are contaminated with dangerous waste or dangerous waste residues. The inspection standard will be a clean debris surface as defined in Section H.3.1. The inspection of the concrete for a clean debris surface will be documented on an inspection record. Those areas already meeting the standard can be clean closed as is.

Those potentially contaminated areas will undergo decontamination to meet the clean closure standard of a clean debris surface. The concrete will be washed down; the rinsate collected, designated, and disposed of accordingly. The concrete will be reinspected for a clean debris surface. Concrete surfaces indicated by visual examination, as still being potentially contaminated will have the surface layer removed to a depth of 0.6 centimeter by scabbing or other approved methods. Even if potential through-thickness cracks had been found during the inspection, concrete decontamination (scabbing) will not employ liquid solutions that could enter cracks. In addition, scabbing residues will be vacuumed away from cracks as residues are generated.

Achievement of a clean debris surface will be documented on an inspection record. Decontamination residues will be collected, designated, and managed as appropriate.

H.4.3.4 Structures

If contaminated with either dangerous or mixed waste constituents, the LAWPS structures will be decontaminated and/or disassembled, if necessary, packaged, and disposed of in accordance with existing land disposal restrictions (WAC 173-303-140).

Closure steps could include the following activities.

- Containerize (as necessary and practicable) and remove any remaining waste.
- Review operating records for spillage incidents and visually inspect storage area surfaces for evidence of contamination or for cracks that could harbor contamination or allow the escape of decontamination solutions. Inspect storage area surfaces for visible evidence of contamination (e.g., discoloration, material degradation, wetness, and odor). If contamination is evident, the affected area(s) will be decontaminated.
- Decontaminate LAWPS walls and floors to minimize the potential for loose contamination and facilitate any required surveys and/or chemical field screening. The structures could be cleaned by water rinse or high-pressure, low-volume steam cleaning coupled with a detergent wash. After decontamination, the walls and floors will be compared to closure performance standards.
- Collect rinsate and manage as dangerous waste for appropriate disposal.
- Secure (lock) personnel entries into building and post doors with appropriate warning signs.

H.4.3.5 Underlying Soils

Clean closure of soil adjacent to and under LAWPS will be accomplished by demonstrating that the lined concrete floor kept contaminants from reaching the soil. Unless inspections identify potential through-thickness cracks indicating containment failure and a subsequent potential for soil contamination from TSD unit operations, the soil will be considered clean closed. However, if inspections identify such cracks and there have been documented spills in the vicinity, potential soil contamination will be investigated.

Where it is possible visually to inspect directly beneath the tanks, a visual inspection will be performed. Where it is not possible visually to inspect beneath the tanks, an evaluation of the tanks integrity and associated secondary containment liners will be made. The condition of the tanks and containment liners will be evaluated to determine if there was any potential for leakage. If no cracks, severe corrosion, or evidence of leaks is observed in either the tanks or containment liners, it will be reasoned that mixed or dangerous waste solutions could not have been released to the soil directly below the DWMU.

External piping (transfer lines) between the Double Shell Tank System and LAWPS are double lined with a leak detection system. If records indicate that no leaks from the primary piping occurred, the soil will be considered clean with respect to RCRA closure.

H.5 Maximum Waste Inventory

The maximum waste inventory for LAWPS is identified in Section H above and Addendum A, Part A.

H.6 Closure of Tanks

Clean closure of LAWPS will consist of the removal and disposal of all dangerous waste and the decontamination and/or removal and disposal of equipment which does not meet the performance standards in Section H.3. The LAWPS was designed to achieve clean closure. This design facilitates closure by allowing complete removal of equipment, if in the event performance standards are not met.

H.7 Schedule for Closure

The actual year of closure will depend on the time required for current waste to be processed and what role the LAWPS will play in processing additional waste generated during future activities in the 200 Areas. Other factors affecting the year of closure include changes in operational requirements, lifetime extension upgrades, and unforeseen factors. When a definite closure date is established, notification of closure will be provided in accordance with Hanford Facility Permit Condition II.J.1.

The activities required to complete closure are planned to be accomplished within 180 days of receiving the final volume of dangerous waste in accordance with WAC 173-303-610(4)(b). Should a modified

schedule be necessary, a revised schedule will be proposed through the permit modification procedure in accordance with WAC 173-303-610(4)(b).

Following completion of closure for each dangerous waste management unit and final facility closure, Certification of Closure will be submitted in accordance with the provisions contained in WAC 173-303-610(6).

ADDENDUM I
INSPECTION PLAN

This page intentionally left blank.

ADDENDUM I
INSPECTION PLAN

CONTENTS

I. INSPECTION REQUIREMENTS I.1

I.1 Inspection Plan I.1
I.1.1 General Inspection Requirements I.1
I.1.2 Specific Process Inspection Requirements I.2
I.1.3 Storage of Ignitable or Reactive Wastes I.3

TABLES

Table I.1. Inspection Schedule for the LAWPS I.4
Table I.2. Inspection Plan for Instrumentation Monitoring I.5

This page intentionally left blank.

I. INSPECTION REQUIREMENTS

I.1 Inspection Plan

This addendum describes the requirements and schedule for inspections of Low-Activity Waste Pre-Treatment System (LAWPS) systems and components. Inspections are conducted to prevent malfunctions and deterioration, operator errors, and discharges that may cause or lead to the release of dangerous waste could pose a threat to human health and the environment. Abnormal conditions identified by an inspection are corrected on a schedule that prevents hazards to workers, the public, and the environment.

I.1.1 General Inspection Requirements

The content and frequency of inspections are described in this section. Inspection records are retained in the Hanford Facility Operating Record, LAWPS file, or other approved locations, in accordance with Hanford Facility Permit Condition II.I.1.

In certain areas of the LAWPS, inspections are performed remotely to maintain radiological exposures As-Low-As-Reasonably-Achievable (ALARA). Monitoring instruments are connected to audible alarms and visual indicators track alarm status. The monitoring system provides trending of selected monitoring data, graphics, and equipment summary displays.

A preventive maintenance recall system is employed to direct preventive maintenance activities at the LAWPS. Equipment requiring maintenance is checked as indicated by the maintenance history and the manufacturer's recommendations. The preventive maintenance of certain equipment will not be possible when the LAWPS is conducting process operations. Therefore, the preventive maintenance could be performed slightly earlier or later than planned to minimize impacts to operations. Necessary deviations from performing preventative maintenance associated with critical process operations will be documented in the Hanford Facility Operating Record, LAWPS files, in accordance with Hanford Facility Permit Condition II.I.1. Deviations could include performing repairs as a result of findings during a previous inspection, which is also documented in the Hanford Facility Operating Record, LAWPS files.

Process control instrumentation at LAWPS is calibrated in accordance with manufacturer's instructions or recommendations, or per engineering judgment and experience. A preventative maintenance program to ensure accuracy and reliability is used to ensure proper process functions. Process control instrumentation is calibrated on a schedule established by the preceding criteria. An instrument calibration and recall system is employed to manage calibrations.

I.1.1.1 Types of Problems

Key components of the LAWPS inspection program include the following areas in accordance with WAC 173-303-320(2)(b):

- Safety, and communications equipment
- Condition of tanks and ancillary piping
- Condition of the process control equipment
- Condition of emergency equipment
- Condition of secondary containment
- Presence of security features and required labeling

Table I.1 and Table I.2 provide a description of LAWPS systems and items that are inspected.

I.1.1.2 Frequency of Inspections

The frequency of inspections is based on specific regulatory requirements, the rate of possible deterioration of equipment and the probability of a threat to human health or the environment.

The LAWPS is inspected as shown in Table I.1 and Table I.2, which includes frequencies.

I.1.2 Specific Process Inspection Requirements

The following sections describe the specific process inspections performed at LAWPS for the tank systems and container storage areas. A description of the tank systems, ancillary equipment, and secondary containment at the LAWPS is provided in Addendum C. Inspections and frequencies are established in Table I.1 and Table I.2. This section includes a brief discussion of the inspections.

I.1.2.1 Overfill Protection

All tanks that have the possibility of being overfilled include level instrumentation that alarms before the tanks reach overflow (high tank level alarms annunciate in the control room, allowing operating personnel to take immediate action to stop the vessels from overfilling). High tank level instrumentation can be tested electrically by manual activation through the control room. These alarms are monitored continuously in the control room during waste transfers and processing. If an alarm is activated, further investigation is performed to determine whether the alarm is false, or whether a condition exists requiring shutdown. Waste transfers could occur independent of waste processing. Overfill controls are inspected daily.

I.1.2.2 Visual Inspections

Visual inspections of tanks, ancillary equipment, and secondary containments are performed to check for leaks, signs of corrosion or damage, and malfunctioning equipment. Weekly visual inspections of the two container storage areas are performed to ensure container management requirements contained in WAC 173-303-630 are being complied with.

Due to ALARA considerations and inaccessibility of the process tanks located in below-grade vaults, daily inspections required by WAC 173-303-630 are performed by a daily inspection of leak detection monitoring data. Visual inspection performed remotely via cameras installed in high dose rate areas, which include below-grade tank vaults and valve and pump pits, are performed on all tanks and ancillary equipment at least annually. These inspections will be scheduled to occur during planned maintenance activities, when possible. Prior to first receipt of waste, a detailed inspection plan will be developed and placed into the LAWPS Operating Record.

Because physical interferences prevent remote viewing of 100% of all vault and pump pit areas by either physical or remote viewing, leak detection is used to augment inspections of those areas. Any indications of leaks, signs of corrosion, damage, or malfunctioning equipment will be investigated to determine the appropriate corrective action. Any necessary corrective actions will be documented in the Hanford Facility Operating Record, LAWPS files, in accordance with Hanford Facility Permit Condition II.I.1.

I.1.2.3 Secondary Containment Leak Detectors

The secondary containment systems have sloped floors that drain liquids to sumps equipped with leak detector probes that alarm in the control room. These alarms are monitored continuously in the control room during LAWPS processing operations and at least daily at other times when no waste is being process or transferred. If an alarm is activated, further investigation is performed to determine whether the alarm is false, or whether a leak or a release is occurring and from what source the leak or release is originating. Leak detection probes can tested electrically by manual activation through the control room.

Waste feed and return lines (from DST to LAWPS and back to DST) and waste transfer lines (to WTP LAW interface point valve box) are of a pipe-in-pipe configuration and sloped to allow for any leaked liquids to be identified by leak detection probes located at low points within the interstitial space.

I.1.2.4 Integrity Assessments

A tank integrity assessment program, including schedule, will be established and included as part of the detailed inspection plan, which will be developed and placed into the LAWPS Operating Record prior to first receipt of waste.

I.1.2.5 Low-Activity Waste Pre-Treatment System Piping

During inspections at the LAWPS, piping is inspected visually for signs of leakage and for general structural integrity. During the visual inspection, particular attention is paid to valves and fittings for signs of cracking, deformation, and leakage. Any necessary corrective actions will be documented in the Hanford Facility Operating Record, LAWPS files, in accordance with Hanford Facility Permit Condition II.I.1.

I.1.2.6 Safety and Security Systems

The Hanford Fire Department (HFD) performs quarterly inspections of the fire suppression and notification systems (i.e., sprinkler systems and fire alarm pull boxes). These inspections include flow tests and alarm system activation to ensure proper function. HFD also performs an annual inspection of all systems that includes smoke detectors, heat detectors, and fire extinguishers.

Operations staff perform documented inspections of safety and security systems and equipment that include emergency eyewash/shower units, fire extinguishers, spill cleanup supplies, ventilation systems, fencing/gates, and warning signs. Any necessary corrective actions will be documented in the Hanford Facility Operating Record, LAWPS files, in accordance with Hanford Facility Permit Condition II.I.1.Inspection Log. Note: Life safety equipment such as first aid kits and defibrillators are not associated with dangerous waste emergency response and are not subject to inspections specified in this addendum.

Observations made and deficiencies noted during an inspection are recorded on inspection log sheets (also called turnover sheets). When completed, the log sheet includes the inspector's printed name, signature, date, and time; the log sheet is submitted for review and approval by LAWPS management or their designee, as required by operating procedures. Once approved, the inspection log sheet is retained in the Hanford Facility Operating Record, LAWPS files for 5 years, in accordance with Hanford Facility Permit Condition II.I.1. The inspection records are used to help determine any necessary corrective actions. Problems identified during the inspections are prioritized and addressed in accordance with a schedule to mitigate health risks to workers, maintain integrity of the waste management units, and prevent hazards to public health and the environment.

If while performing an inspection, a leak or spill is discovered, facility operations responds per the emergency response procedures in Addendum J and action is taken to stop the leak and determine the cause. In accordance with WAC 173-303-640(7)(b)(i) the waste is removed from the secondary containment within 24 hours, or in a timely manner as it possible to prevent harm to human health and the environment.

Inspection records associated with fire systems and equipment are maintained by HFD

I.1.3 Storage of Ignitable or Reactive Wastes

The LAWPS does not store or treat ignitable or reactive waste, therefore the requirements of WAC 173-303-395(1)(d) are not applicable.

Table I.1. Inspection Schedule for the LAWPS

Item	Inspection	Frequency
LAWPS Tank Systems		
Filter Feed Tank	Inspect tank and ancillary equipment for leaks and deterioration.	Daily†
Treated Waste Delay Tank	Inspect tank and ancillary equipment for leaks and deterioration.	Daily†
Cesium Product Tank	Inspect tank and ancillary equipment for leaks and deterioration.	Daily†
Lag Storage Tank 1	Inspect tank and ancillary equipment for leaks and deterioration.	Daily†
Lag Storage Tank 2	Inspect tank and ancillary equipment for leaks and deterioration.	Daily†
Lag Storage Tank 3	Inspect tank and ancillary equipment for leaks and deterioration.	Daily†
Verification Tank	Inspect tank and ancillary equipment for leaks and deterioration.	Daily, when in use.
LAWPS Container Storage Areas		
Staging, Maintenance, and Laydown Area	Inspect containers for signs of deterioration, leaks, aisle spacing, labeling, closed and secured.	Weekly
Spent Resin Handling Area	Inspect containers for signs of deterioration, leaks, aisle spacing, labeling, closed and secured.	Weekly
Safety and Security Systems		
Eye wash stations	Check status; check for adequate pressure	Monthly
Safety showers	Check status; check for adequate pressure	Monthly
Spill Response	Check status; adequate supplies in good condition	Monthly
Security	Check status of fence, gates, and warning signs	Monthly
Emergency Systems		
Tank Overfill Control	Check status; check for functionality.	Monthly and Annually
Fire extinguishers	Check for adequate charge.	Monthly and Annually
Emergency lighting	Test operability.	Monthly
Fire suppression system	Test operability.	Monthly and Annually
Processing Areas		
Uninterruptible Power Supply	Check output voltage and visually inspect battery pack for corrosion and leakage. Check indicator lights for fault conditions.	Annually
Cross Flow Filtration	Inspect secondary containment system for signs of deterioration.	Annually
Ion Exchange	Inspect secondary containment system for signs of deterioration.	Annually
Pump and Valve Pits	Inspect secondary containment system for signs of deterioration.	Annually
Resin Load-out Station	Inspect secondary containment system for signs of deterioration.	Annually

† The "daily" frequency will be met by a daily review of leak detection monitoring data.

1

Table I.2. Inspection Plan for Instrumentation Monitoring

Item	Inspection	Frequency*
LAWPS Tank Systems		
Leak detector	Monitor for leakage from the Filter Feed Tank, Treated Waste Delay Tank, Cesium Product Tank, and Lag Storage Tanks 1, 2, & 3.	Continuously
Leak detector	Monitor for leakage in the IX vault.	Continuously
Level alarm	Monitor for overfill from the Filter Feed Tank, Treated Waste Delay Tank, Cesium Product Tank, and Lag Storage Tanks 1, 2, & 3.	Continuously
Leak detector	Verification tank (spent resin handling area).	Continuously**
Leak detector	Waste feed lines from DST system to the Filter Feed Tank and from the Filter Feed Tank back to the DST system.	Continuously**
Leak detector	Waste return line from the CS Product Tank back to the DST system.	Continuously**
Leak detector	Waste feed line from LAWPS to WTP LAW interface point (valve box).	Continuously**
Leak detector	All process pump and valve pits.	Continuously

* Frequency of "continuously" applies during LAWPS processing operations. Data from alarms, leak detectors, and level transmitters is monitored in the control room at least daily at other times when no waste is being process or transferred, even though many of these instruments record continuously. Emergency communications equipment and warning systems (e.g. fire alarms, take cover alarms, and evacuation alarms) are included in Addendum J, Contingency Plan. These alarms are monitored continuously and the response to these alarms do not rely on personnel being present in the control room.

** In the event of a malfunction of one of the electronic leak detectors, use of compensatory measure will be implemented such as monitoring of tank level indicators.

Note: an alternate means of monitoring may be used during periods of control system outage.

2
3
4

This page intentionally left blank.

ADDENDUM J
CONTINGENCY PLAN

This page intentionally left blank.

ADDENDUM J
CONTINGENCY PLAN

CONTENTS

J. CONTINGENCY PLAN J.1
J.1 Building Evacuation Routing J.2
J.2 Building Emergency Director J.2
J.3 Implementation of the Plan J.3
J.3.1 Protective Actions Responses J.4
J.3.2 Response to Facility Operations Emergencies J.4
J.3.3 Prevention of Recurrence or Spread of Fires, Explosions, or Releases J.6
J.3.4 Incident Recovery and Restart of Operations J.6
J.3.5 Incompatible Waste J.7
J.3.6 Post Emergency Equipment Maintenance and Decontamination J.7
J.4 Emergency Equipment J.7
J.4.1 Incident Command Post J.8
J.5 Required Reports J.8
J.6 Plan Location and Amendments J.9
J.7 Facility/Building Emergency Response Organization J.9

TABLES

Table J.1. Hanford Facility Documents Containing Contingency Plan Requirements of WAC 173-303-350(3) J.1
Table J.2. Fixed Emergency Equipment J.7
Table J.3. Portable Emergency Equipment J.8
Table J.4. Communications Equipment/Warning Systems J.8
Table J.5. Spill Control and Containment Supplies J.8

This page intentionally left blank.

J. CONTINGENCY PLAN

The requirements for a contingency plan at Low Activity Waste Pretreatment System (LAWPS) are satisfied in the following documents: portions of Hanford Facility Permit (Permit) Attachment 4, *Hanford Emergency Management Plan* (DOE/RL-94-02), the LAWPS Building Emergency Plan, and this Addendum.

The unit specific building emergency plan also serves to satisfy a broad range of other requirements [e.g., Occupational Safety and Health Administration standards (29 CFR 1910), *Toxic Substance Control Act of 1976* (40 CFR 761) and U.S. Department of Energy Orders]. Therefore, revisions made to portions of the unit specific building emergency plan that are not governed by the requirements of WAC 173-303 will not be considered as a modification subject to WAC 173-303-830 or Hanford Facility Permit Condition I.C.3.

Table J.1 identifies the sections of the unit specific building emergency plan written to meet WAC 173-303-350(3) contingency plan requirements. In addition, Section 12.0 of the unit specific building emergency plan is written to meet WAC 173-303 requirements identifying where copies of Hanford Facility Permit Attachment 4, *Hanford Emergency Management Plan* (DOE/RL-94-02) and the building emergency plan are located and maintained on the Hanford Facility. Therefore, revisions to Addendum J, Table J.1 require a modification subject to WAC 173-303-830 and/or Hanford Facility Permit Condition I.C.3.

A Building Emergency Plan will be provided prior to receipt of waste to demonstrate compliance with WAC 173-303-340, Preparedness and Prevention; WAC 173-303-350, Contingency Plan and Emergency Procedures; and WAC 173-303-360, Emergencies.

Table J.1. Hanford Facility Documents Containing Contingency Plan Requirements of WAC 173-303-350(3)

Requirement	Permit Attachment 4, *Hanford Emergency Management Plan* (DOE/RL-94-02)	Building Emergency Plan[1]	Part III, OU-1, LAWPS, Addendum J
-350(3)(a) – A description of the actions, which facility personnel must take to comply with this section and WAC 173-303-360.	X[2] Section 1.3.4	X[2]	X[2] Sections J.3.1, J.3.2, through J.3.2.5, and J.3.3[3] Sections J.3, J.3.4, J.3.5, J.3.6, and J.5
-350(3)(b) – A description of the actions which shall be taken in the event that a dangerous waste shipment, which is damaged or otherwise presents a hazard to the public health and the environment, arrives at the facility, and is not acceptable to the owner or operator, but cannot be transported pursuant to the requirements of WAC 173-303-370(5), Manifest system, reasons for not accepting dangerous waste shipments.	X[2,4] Section 1.3.4		
-350(3)(c) – A description of the arrangements agreed to by local police departments, fire departments, hospitals, contractors, and state and local emergency response teams to coordinate emergency services as required in WAC 173-303-340(4).	X Sections 3.2.3, 3.3.1, 3.3.2, 3.4, 3.4.1.1, 3.4.1.2, 3.4.1.3, 3.7, and Table 3-1		

Table J.1. Hanford Facility Documents Containing Contingency Plan Requirements of WAC 173-303-350(3)

Requirement	Permit Attachment 4, *Hanford Emergency Management Plan* (DOE/RL-94-02)	Building Emergency Plan[1]	Part III, OU-1, LAWPS, Addendum J
-350(3)(d) – A current list of names, addresses, and phone numbers (office and home) of all persons qualified to act as the emergency coordinator required under WAC 173-303-360(1). Where more than one person is listed, one must be named as primary emergency coordinator, and others must be listed in the order in which they will assume responsibility as alternates. For new facilities only, this list may be provided to the department at the time of facility certification (as required by WAC 173-303-810(14)(a)(I)), rather than as part of the permit application.		X[5]	X[5] Sections J.2 and J.7
-350(3)(e) – A list of all emergency equipment at the facility (such as fire extinguishing systems, spill control equipment, communications and alarm systems, and decontamination equipment), where this equipment is required. This list must be kept up to date. In addition, the plan must include the location and a physical description of each item on the list, and a brief outline of its capabilities.		X	X Section J.4
-350(3)(f) – An evacuation plan for facility personnel where there is a possibility that evacuation could be necessary. This plan must describe the signal(s) to be used to begin evacuation, evacuation routes, and alternate evacuation routes.	X[6] Figure 7-3 and Table 5-1	X[7]	X[7] Section J.1

An "X" indicates requirement applies.

[1] Portions of Hanford Facility Permit Attachment 4, *Hanford Emergency Management Plan* (DOE/RL-94-02) not enforceable through Appendix A of that document are not made enforceable by reference in the building emergency plan.

[2] Hanford Facility Permit Attachment 4, *Hanford Emergency Management Plan* (DOE/RL-94-02) contains descriptions of actions relating to the Hanford Site Emergency Preparedness System. No additional description of actions are required if at the site level. If other credible scenarios exist or if emergency procedures at the unit are different, the description of actions contained in the building emergency plan will be used during an event by a building emergency director.

[3] Sections J.1, J.2 through J.2.5, and J.3 of the building emergency plan are those sections subject to the Class 2 "Changes in emergency procedures (i.e., spill or release response procedures)" described in WAC 173-303-830, Appendix I, Section B.6.a.

[4] This requirement only applies to TSD units, which receive shipment of dangerous or mixed waste defined as off-site shipments in accordance with WAC 173-303.

[5] Emergency Coordinator names and home telephone numbers are maintained separate from any contingency plan document, on file in accordance with Hanford Facility Permit Condition II.A.4 and are updated, at a minimum, monthly.

[6] The Hanford Facility (site wide) signals are provided in this document. No unit/building signal information is required unless unique devices are used at the unit/building.

[7] An evacuation route for the TSD unit must be provided. Evacuation routes for occupied buildings surrounding the TSD unit are provided through information boards posted within buildings.

J.1 Building Evacuation Routing

A Building Emergency Plan will be provided prior to receipt of waste and will include identification of the primary and secondary staging areas and a general layout of the LAWPS. Alternate evacuation routes will be used on a case-by-case basis based on meteorological conditions at the time of the event.

J.2 Building Emergency Director

Emergency response will be directed by the Building Emergency Director (BED) until the Incident Commander (IC) arrives. The Incident Command System and staff with supporting on-call personnel fulfill the responsibilities of the Emergency Coordinator as discussed in WAC 173-303-360.

During events, personnel perform response duties under the direction of the BED. The Incident Command Post (ICP) is managed by the senior Hanford Fire Department official, unless the event is determined to be a security event, in which case the Hanford Fire Department and Hanford Patrol will operate under a unified command system with Hanford Patrol making all decisions pertaining to security. These individuals are designated as the IC and as such, have the authority to request and obtain resources necessary for protecting people and the environment. The BED becomes a member of the ICP and functions under the direction of the IC. In this role, the BED continues to manage and direct LAWPS operations.

A listing of BEDs by title, work location, and work telephone numbers is contained in Section J.7 Facility/Building Emergency Response Organization (ERO). The BED is available through an "on-call" list 24 hours a day. Names and home telephone numbers of the BEDs are available from the Patrol Operations Center (POC) in accordance with Hanford Facility Permit Condition II.A.4.

J.3 Implementation of the Plan

In accordance with WAC 173-303-360(2)(b) the BED ensures that trained personnel identify the character, source, amount, and areal extent of a release, fire, or explosion to the extent possible. Identification of waste can be made by activities that can include, but are not limited to, visual inspection of involved containers, sampling activities in the field, reference to inventory records, or by consulting with facility personnel. Sampling will be accomplished by qualified personnel and analyzed appropriately. These activities will be performed as soon as practical and shall include all available information.

The BED shall use the following guidelines to determine if an event has met the requirements of WAC 173-303-360(2)(d):

1. The event involved an unplanned spill, release, fire, or explosion,

AND

2.a The unplanned spill or release involved a dangerous waste, or the material involved became a dangerous waste as a result of the event (e.g., product that is not recoverable.), or

2.b The unplanned fire or explosion occurred at the LAWPS or transportation activity subject to RCRA contingency planning requirements,

AND

3. Time urgent response from an emergency services organization was required to mitigate the event or a threat to human health or the environment exists.

As soon as possible, after stabilizing event conditions, the BED shall determine, in consultation with the site contractor environmental single point-of-contact (POC), if notification to the Washington State Department of Ecology (Ecology) is needed to meet WAC 173-303-360(2)(d) reporting requirements. If all of the conditions under 1, 2, and 3 are met, notifications are to be made to Ecology. Additional information is found in Hanford Facility Permit Attachment 4, *Hanford Emergency Management Plan*, (DOE/RL-94-02), Section 4.2.

If review of all available information does not yield a definitive assessment of the danger posed by the incident, a worst-case condition will be presumed and appropriate protective actions and notifications will be initiated. The BED is responsible for initiating any protective actions based on their best judgment of the incident.

The BED must assess each incident to determine the response necessary to protect the personnel, facility, and the environment. If assistance from Hanford Patrol, Hanford Fire Department, or ambulance units is required, the Hanford Emergency Response Number (911 from site office phones/373-0911 from cellular phones) must be used to contact the POC and request the desired assistance.

J.3.1 Protective Actions Responses

Protective action responses are discussed in the following sections. The steps identified in the following description of actions do not have to be performed in sequence because of the unanticipated nature of incident events.

J.3.1.1 Evacuation

The objective of a facility evacuation order is to limit personnel exposure to hazardous materials or dangerous/mixed waste by increasing the distance between personnel and the hazard. The scope of the evacuation includes evacuation of the facility because of an event at the facility as well as evacuation of the facility in response to a site evacuation order. Evacuation will be directed by the BED when conditions warrant and will apply to all personnel not actively involved in the event response or emergency plan related activities.

The BED will initiate the evacuation by directing an announcement be made to evacuate along with the evacuation location over a public address system, facility radios, and, as conditions warrant, by activating the 200 Area site evacuation alarms by calling the POC using 911 from site office phones/373-0911 from cellular phones. Personnel proceed to a predetermined staging area, or other safe upwind location, as determined by the BED. The BED will determine the operating configuration of the facility and identify any additional protective actions to limit personnel exposure to the hazard.

Emergency organization personnel or assigned operations personnel will conduct a sweep of occupied buildings to ensure that all non-essential personnel and visitors have evacuated. For an immediate evacuation, accountability will be performed at the staging area. The BED will assign personnel as accountability aides and staging managers with the responsibility to ensure that evacuation actions are taken at all occupied buildings at the LAWPS. All implementing actions executed by the aides/managers are directed by the emergency response procedures. When evacuation actions are complete, the aides/managers will provide a status report to the BED. The BED will provide status to the IC.

J.3.1.2 Take Cover

The objective of the take cover order is to limit personnel exposure to hazardous materials, or dangerous/mixed waste when evacuation is inappropriate or not practical. Evacuation might not be practical or appropriate because of extreme weather conditions or the material release might limit the ability to evacuate safely personnel.

The BED will initiate the take cover by directing an announcement be made over the public address system, facility radios, and, as conditions warrant, by activating the 200 Area site take cover alarms by calling the POC using 911 from site office phones/373-0911 from cellular phones). Actions to complete a facility take-cover will be directed by the emergency response procedure. Protective actions associated with operations include configuring, or shutting down, ventilation systems serving occupied portions of the facility. Determination of additional take cover response is based on plant operating configuration, weather conditions, amount and duration of release, and other conditions, as applicable to the event and associated hazard. The BED will assign personnel as accountability aides with responsibility to ensure that take-cover actions are taken at all occupied buildings at the LAWPS. All implementing actions executed by the aides/managers are directed by the emergency response procedure. When take cover actions are complete, the aides/manager will provide the BED with a status report.

J.3.2 Response to Facility Operations Emergencies

Depending on the severity of the following events, the BED reviews the site wide procedures and LAWPS emergency response procedure(s) and, as required, categorizes and/or classifies the event. If necessary, the BED initiates area protective actions and Hanford Site ERO activation. The steps identified in the following description of actions do not have to be performed in sequence because of the unanticipated nature of incident events.

J.3.2.1 Loss of Utilities

An evaluation of each event is required to determine the impacts due to loss of utility services. When a BED determines a loss of utility impact, actions are taken to ensure dangerous and/or mixed waste is being properly managed, to the extent possible given event circumstances. As necessary, the BED will stop operations as appropriate and take appropriate actions until the utility is restored.

J.3.2.2 Major Process Disruption/Loss of Plant Control

A hazards assessment will confirm that design features prevent this occurrence from posing significant risk to human health or the environment.

J.3.2.3 Pressure Release

A hazards assessment will confirm that design features prevent a pressure release from posing a significant risk to human health or the environment. Hazardous material release and dangerous/mixed waste releases are addressed in Section J.3.2.5.

J.3.2.4 Fire and/or Explosion

The individual discovering a fire will activate the fire alarm (pull box); call 911 from site office phones/373-0911 from cellular phones or verifies that the Hanford Emergency Response Number has been called. Automatic initiation of a fire alarm (through the smoke detectors, sprinkler systems, or pull boxes) is also possible.

- Unless otherwise instructed, personnel shall evacuate the area/building by the nearest safe exit and proceed to the designated staging area for accountability.
- On activation of the fire alarm, ONLY if time permits, personnel should shut down equipment, and secure waste. The alarm automatically signals the Hanford Fire Department.
- The BED proceeds directly to the ICP, obtains all necessary information pertaining to the incident, and sends a representative to meet Hanford Fire Department.
- The BED provides a formal turnover to the IC when the IC arrives at the ICP.
- The BED informs the Hanford Site ERO as to the extent of the emergency (including estimates of dangerous waste and mixed waste quantities released to the environment).
- If operations are stopped in response to the fire, the BED ensures that systems are monitored for leaks, pressure buildup, gas generation, and ruptures.
- Hanford Fire Department firefighters extinguish the fire as necessary.

NOTE: Following a fire and/or explosion, WAC 173-303-640(7) will be addressed for the LAWPS regarding fitness for use.

J.3.2.5 Hazardous Material, Dangerous and/or Mixed Waste Spill

Spills can result from many sources including process leaks, equipment malfunction, container spills or leaks, damaged packages or shipments, or personnel error. Spills of mixed waste are complicated by the need to deal with the additional hazards posed by the presence of Atomic Energy Act radioactive materials. Spill controls include secondary containment systems, dedicated spill control sumps, remote gauges, and level indicators. Contractor procedures provide alarm response and maintenance requirements for leak detection equipment, surveillance of possible leak locations, and response actions for detected spills.

In the event of a spill:

- The discoverer notifies BED and initiates SWIM response:

  Stops work
  Warns others in the vicinity
  Isolates the area

Minimizes the exposure to the hazards

- If Operations are stopped, the BED ensures that the plant is put in a safe shutdown configuration.
- The BED determines if emergency conditions exist requiring response from the Hanford Fire Department based on classification of the spill and injured personnel, and evaluates need to perform additional protective actions.
- If the Hanford Fire Department resources are not needed, the spill is mitigated with resources identified in Section J.4 of this plan and proper notifications are made.
- If the Hanford Fire Department resources are needed, the BED calls 911 from site office phones/373-0911 from cellular phones.
- The BED sends a representative to meet the Hanford Fire Department.
- The BED provides a formal turnover to the IC when the IC arrives at the ICP.
- The BED informs the Hanford Site ERO as to the extent of the emergency (including estimates of dangerous waste and mixed waste quantities released to the environment).
- If operations are stopped in response to the spill, the BED ensures that systems are monitored for leaks, pressure buildup, gas generation, and ruptures.
- Hanford Fire Department stabilizes the spill.

NOTE: For response to leaks or spills and disposition of leaking or unfit-for-use tank systems, refer to WAC 173-303-640(7).

J.3.2.5.1 Damaged, or Unacceptable Shipments

The LAWPS does not receive dangerous or mixed waste shipments that require manifesting.

J.3.3 Prevention of Recurrence or Spread of Fires, Explosions, or Releases

The BED, as part of the Incident Command System, takes the steps necessary to ensure that a secondary release, fire, or explosion does not occur. The BED will take measures, where applicable, to stop processes and operations, collect and contain released waste, and remove or isolate containers. The BED also monitors for leaks, pressure buildups, gas generation, or ruptures in valves, pipes, or other equipment, whenever this is appropriate.

J.3.4 Incident Recovery and Restart of Operations

An incident recovery plan is developed when necessary in accordance with Hanford Facility Permit Attachment 4, *Hanford Emergency Management Plan*, (DOE/RL-94-02), Section 9.2. The incident recovery plan is needed following an event where further risk could be introduced to personnel, the facility, or the environment through recovery action and/or to maximize the preservation of evidence.

If the incident recovery plan was implemented according to Section J.3 of this plan, Ecology is notified before operations can resume. The Hanford Facility Permit Attachment 4, *Hanford Emergency Management Plan*, (DOE/RL-94-02), Section 5.1 discusses different reports to outside agencies. This notification is in addition to those required reports and includes the following statements:

- There are no incompatibility issues with the waste and released materials from the incident.
- All the equipment has been cleaned (if necessary), determined to be fit for its intended use, and placed back into service.

The notification required by WAC 173-303-360(2)(j) and WAC 173-303-640(7)(d)(i) may be made via telephone conference. Additional information that Ecology requests regarding these restart conditions will be included in the required 15-day report identified in Section J.5 of this plan.

For emergencies not involving activation of the Hanford Emergency Operations Center (EOC), the BED ensures that conditions are restored to normal before operations are resumed. If the Hanford Site ERO was activated and the emergency phase is complete, a special recovery organization could be appointed at

the discretion of the U.S. Department of Energy, Richland Operations Office (RL) to restore conditions to normal. This process is detailed in RL and contractor emergency procedures. The makeup of this organization depends on the extent of the damage and the effects. The onsite recovery organization will be appointed by the appropriate contractor's management.

J.3.5 Incompatible Waste

After an event, the BED or the onsite recovery organization ensures that no waste that might be incompatible with the released material is treated, stored, and/or disposed of until cleanup is completed. Cleanup actions are taken by LAWPS personnel or other assigned personnel. Hanford Facility Permit Attachment 4, *Hanford Emergency Management Plan*, (DOE/RL-94-02), Section 9.2.3, describes actions to be taken.

Waste from cleanup activities is designated and managed as newly generated waste. A field check for compatibility before storage is performed as necessary. Incompatible wastes are not placed in the same container. Containers of waste are placed in storage areas appropriate for their compatibility class.

If incompatibility of wastes was a factor in the incident, the BED or the onsite recovery organization ensures that the cause is corrected. However, incompatible waste is not anticipated to ever be managed at LAWPS.

J.3.6 Post Emergency Equipment Maintenance and Decontamination

All equipment used during an incident is decontaminated (if practicable) or disposed of as spill cleanup debris. Decontaminated equipment is checked for proper operation before storage for subsequent use. Consumable and disposed materials are restocked. Fire extinguishers are replaced as necessary.

The BED ensures that all equipment is cleaned and fit for its intended use, or replaced before operations are resumed. Depleted stocks of neutralizing and absorbing materials are replenished.

J.4 Emergency Equipment

Emergency resources and equipment for the LAWPS are presented in the following tables.

Table J.2. Fixed Emergency Equipment

Type	Location	Capability
Safety shower/ eye wash stations	Reagent storage area main process building; maintenance and laydown area, and reagent addition skid area. Spent resin handling area. Fresh resin handling area.	Assist in flushing chemicals/ materials from the body and/ or eyes and face of personnel.
Sprinkler system	Throughout the main process building, spent resin handling area, fresh resin handling area.	Assist in the control of a fire. Maintained dry to prevent accidental damage to equipment.
Fire alarm pull boxes	Throughout the facility.	Activate the local fire alarm and notifies the HFD.
Emergency lights	Throughout occupied areas of the facility, including the main process building, spent resin handling area, fresh resin handling area.	1-hour temporary lighting.

Table J.3. Portable Emergency Equipment

Type	Location	Capability
Fire extinguisher ABC type	Throughout the facility.	Fire suppression for Class A, B, and C fires
Fire extinguisher BC type	Throughout the facility.	Fire suppression for Class B and C fires

Table J.4. Communications Equipment/Warning Systems

Type	Location	Capability
Fire alarms	Annunciators located within occupied portions of LAWPS and one fixed external location.	Audible throughout LAWPS.
Take cover/evacuation	Annunciators located within occupied portions of LAWPS and one fixed external location.	Audible throughout LAWPS.
Public address system	Annunciators located within occupied portions of LAWPS and one fixed external location.	Audible throughout LAWPS
Portable radios	Operations and maintenance personnel	Communication between work teams and the control room.
Telephone	LAWPS Change trailer.	Internal and external communications. Allows notification of outside resources (POC, HFD, Hanford Patrol, etc.

Note: Sitewide communications and warning systems are identified in Hanford Facility Permit Attachment 4, *Hanford Emergency Management Plan*, (DOE/RL-94-02), Table 5.1.

Table J.5. Spill Control and Containment Supplies

Spill Kits And Spill Control Equipment		
Type	**Location**	**Capability**
Spill response supplies	Reagent storage area, fresh resin handling area, and spent resin handling area.	Support containment and cleanup of hazardous material spills
Spill response cabinet	Maintenance and laydown area.	Support equipment for spill response

J.4.1 Incident Command Post

If the ICP is activated, the BED will notify appropriate personnel of its location by either the public address system, radios, or telephones. Emergency resource materials are stored at that location or can be brought to an alternative location. The IC could activate the Hanford Fire Department Mobile Command Unit if necessary.

J.5 Required Reports

Post incident, written reports are required for certain incidents on the Hanford Site. The reports are described in Hanford Facility Permit Attachment 4, *Hanford Emergency Management Plan*, (DOE/RL-94-02), Section 5.1.

Facility management must note in the Treatment, Storage, and Disposal Unit operating record, the time, date and details of any incident that requires implementation of the contingency plan (refer to Section J.3). Within fifteen (15) days after the incident, a written report must be submitted to Ecology. The report must include the elements specified in WAC 173-303-360(2)(k) and WAC 173-303-640(7)(d)(ii).

J.6 Plan Location and Amendments

Copies of this plan are maintained at the Central Shift Office, located in 200 East Area. This plan will be periodically reviewed and immediately amended as necessary, in accordance with Hanford Facility Permit Attachment 4, *Hanford Emergency Management Plan*, (DOE/RL-94-02), Section 14.3.1.1.

J.7 Facility/Building Emergency Response Organization

LAWPS Building Emergency Directors		
Title	**Work Location**	**Work Phone**
Primary/Alternate	Central Shift Manager	200 Areas, Central Shift Office 373-2689

Names and home telephone numbers of the BEDs are available from the POC (373-3800) in accordance with Hanford Facility Permit Condition II.A.4.

This page intentionally left blank.

APPENDIX 2 – VOLUME 1

DESIGN MEDIA

TABLE 1 – LAWPS SPECIFICATIONS, DESIGN CALCULATIONS, AND REPORTS

RECEIVED
JUL 13 2017
EDMC

APPENDIX 2 – DESIGN MEDIA

Table A.1 LAWPS Specifications, Design Calculations, and Reports

Number	Title
13-2-009	Furnishing, Detailing, Fabrication, Delivery and Installation of Stainless Steel Liner Plates
15-2-001	Cross-Flow Filter System Procurement Specification
15-2-003	Ion Exchange Column Specification
15-2-005	In-Tank Transfer Pumps Specification
15-2-020	LAWPS Tank Agitator Specification
15-2-022	Specialty Valve and Instrument Procurement Specification
15-2-026	ASME Process Vessel Specification
16-2-001	Piping Materials Specification
16-2-002	Piping Valves Specification
16-2-003	Shop and Module Piping Fabrication and Installation
16-2-004	Field Fabrication and Installation of Piping
16-2-005	Pipe Welding
16-2-009	Piping Protective Coatings
17-2-001	Common Motor Requirements for Process & Non-Process Equipment
17-2-005	Uninterruptable Power Supply Systems
19-2-003	Control Valve Specification
19-2-008-1	Non-Safety Rated Instruments Specification
19-2-008-2	Safety Rated Instruments Specification
19-2-017	Leak Detection Instruments Specification
19-2-018	Facility Inspection CCTV System Specification
31269-16-CALC-0401	Calculation for Piping Wall Thickness for Non-Safety Significant Pipe Material Classes
31269-16-CALC-0402	Calculation for Piping Wall Thickness for Safety Significant Pipe Material Classes
31269-21-RPT-0001	Material of Construction Evaluation

SPECIFICATION

13-2-009

ENGINEERING SPECIFICATION FOR FURNISHING, DETAILING, FABRICATION, DELIVERY AND INSTALLATION OF STAINLESS STEEL LINER PLATES

AECOM ATKINS AREVA

LOW ACTIVITY WASTE PRETREATMENT SYSTEM

Project No. 31269 (T5L01)

Document No. 13-2-009

CSI Section 05 55 01

Safety Related ☐ Non-Safety Related ☒

ENGINEERING SPECIFICATION FOR FURNISHING, DETAILING, FABRICATION, DELIVERY AND INSTALLATION OF STAINLESS STEEL LINER PLATES

DUANE EDWARD CASTANEDA
STATE OF WASHINGTON
52436
STRUCTURAL ENGINEER
PROFESSIONAL ENGINEER

5-17-2017

Prepared for

Washington River Protection Solutions, LLC

FOR PERMITTING
DC 5-17-2017

Revision: 0 Status: Final

AECOM ATKINS AREVA

Project Number: 31269 (T5L01)
Doc. No.: 13-2-009
Date: May 17, 2017
Revision: 0

REVISION PAGE

Project Name:	LAWPS	Discipline:	Structural
Client:	Washington River Protection Solutions	Project Number:	31269 (T5L01)
		Latest Revision:	0

REVISION SIGNATURES

James F. Klett (Digitally signed by James F. Klett; DN: cn=James F. Klett, o=AECOM, ou=MS, email=james.klett@aecom.com, c=US; Date: 2017.05.17 14:29:07 -04'00')		Floyd J Vissat (Digitally signed by Floyd J Vissat; Date: 2017.05.17 13:37:40 -06'00')	
Prepared by	Date	Approved by (SDE/Lead)	Date
Daud Sheikh (Digitally signed by Daud Sheikh; DN: cn=Daud Sheikh, o=MS, ou=AECOM, email=daud.sheikh@aecom.com, c=US; Date: 2017.05.17 14:40:44 -04'00')		Paul Bell (Digitally signed by Paul Bell; Date: 2017.05.17 14:42:32 -06'00')	
Checked by	Date	Approved by (QA)	Date
N/A		Daniel Priebe (Digitally signed by Daniel Priebe; Date: 2017.05.17 15:17:10 -06'00')	
Verified by (if required)	Date	Approved by (PEM)	Date

Status	Rev. No.	Date	Prepared By	Pages	Description of Changes
Final	0	May 17, 2017	James Klett	All	Approved for Bids

Safety Related: Yes ☐ No ☒	**Quality Level:** Full QA ☐ Enhanced QA ☐ Commercial QA ☒

TABLE OF CONTENTS

1.0 PART 1 - GENERAL 1
1.1 Section Scope 1
1.2 Related CSI Sections 2
1.3 Codes and Standards 2
1.4 System Description 3
1.5 Submittals 4
1.6 Delivery, Storage and Handling 7
1.7 Quality Assurance 8
1.8 Site Conditions 9
2.0 PART 2 - PRODUCTS 11
2.1 Manufacturers (Not Used) 11
2.2 Materials 11
2.3 Equipment (Not Used) 12
2.4 Components (Not Used) 12
2.5 Fabrication 12
2.6 Shop Quality Control 15
3.0 PART 3 - EXECUTION 17
3.1 Preparation 17
3.2 Erection, Installation, Application 18
3.3 Field Quality Control 19
3.4 Adjusting and Cleaning (Not Used) 20
3.5 Demonstration 20
3.6 Protection 21
4.0 LIST OF APPENDICES 22
4.1 APPENDIX A – SKEWED T-WELD DETAILS

LIST OF TERMS

Abbreviations and Acronyms

The abbreviations listed below when used in this Specification shall have the following meanings:

Term	Definition
AISC	American Institute of Steel Construction
ANSI	American National Standards Institute
ASME	American Society of Mechanical Engineers
ASNT	American Society for Nondestructive Testing
ASTM	ASTM International
AWS	American Welding Society
CMTR	Certified Mill Test Reports
CQA	Commercial Quality Assurance
CSI	Construction Specifications Institute
CWI	Certified Weld Inspector
EQA	Enhanced Quality Assurance
FQA	Full Quality Assurance
LAWPS	Low Activity Waste Pretreatment System
NDE	Nondestructive Examination
PQR	Procedure Qualification Records
PT	Penetrant Test
RFI	Request for Information
SCWI	Senior Certified Weld Inspector
VT	Visual Test
WPS	Weld Procedure Specification
WTP	Waste Treatment Project

Units

Symbol	Definition
°F	Degrees Fahrenheit
IN	Inch
FT	Feet
PPM	Parts Per Million

Definitions

BUYER – The Company for whom the VENDOR is performing work or services.

CERTIFIED WELD INSPECTOR (CWI) - Personnel certified in accordance with AWS QC-1 as either a Certified Welding Inspector or Senior Certified Welding Inspector. Personnel certified in accordance in the Visual Method with ASNT SNT-TC-1A as a Level II or III are also qualified to visually examine welds.

COMMERCIAL QUALITY ASSURANCE (CQA) - Level of controls for those items, services, or processes where, based on an evaluation of risk or nuclear safety, no additional quality controls beyond the Manufacturer's published or stated attributes of the item, service, or process is required.

DESIGN CHANGE – Within the context of this specification, a DESIGN CHANGE is technically equivalent to a SUBSTITUTION (see SUBSTITUTION). However, the term DESIGN CHANGE may be used to refer to more significant changes to the design compared to a simple substitution.

DEVIATION – Any departure from the requirements contained in the purchase order and specification which VENDOR proposes to incorporate if approved by BUYER.

ENHANCED QUALITY ASSURANCE (EQA) - Level of controls for those items, services, or processes where, based on an evaluation of risk or nuclear safety, additional controls beyond the provider's published or stated attributes of the item, service, or process are needed to verify critical attributes.

FULL QUALITY ASSURANCE (FQA) - Level of controls applied for items services, or processes that are commensurate with the controls invoked under ASME NQA-1 or other appropriate national consensus standard.

GRILLAGE – Framing embedded in the concrete surface of floors and walls providing a fixture for the attachment of liner panels

HANDLING - The movement or transportation of items following receipt from offsite/ project locations. This includes movement within storage areas and movement/transportation from receipt or storage areas to field locations. Handling requirements include the need for special handling tools and equipment, restrictions on material composition of surfaces in contact with the item, protection against damage or deterioration, which could occur during movement and placement, protection against physical damage due to excessive shock or vibration, and protection against entry of dirt, water, or other contaminants.

HOLD POINT – A mandatory inspection activity beyond which work shall not proceed until (1) the inspection is performed by an independent inspector and/or BUYER and acceptance is authenticated, or (2) a written release is authorized by the organization who established the hold point.

MANUFACTURER – The party responsible for making the product.

MORE CONSERVATIVE – "More conservative" shall be interpreted as "more protective of the health, safety and well-being of Site workers and facilities, the public, and environment, as applicable."

NONCONFORMANCE – a deficiency in characteristic, documentation, or procedure that renders the quality of an item or activity unacceptable or indeterminate.

PROCUREMENT QUALITY CLAUSES (QA Clauses) - Procurement quality clauses are to be used for the acquisition of items and services. The clauses establish contractual obligations for quality program systems, identification, traceability, documents submittals, testing, reporting, qualification, special process controls, inspections, etc.

PRODUCT DATA – Printed information including, but not limited to, catalog cuts, color charts, illustrations, diagrams, templates, performance curves, brochures, and other forms of Product literature.

QUALITY ASSURANCE RECORDS – Quality assurance plans, procedures, and records, including completed documents that furnish evidence of the quality of an item or activities affecting quality.

SHALL / MUST – Denotes project requirements, compliance is required

SHIPPING – The movement of items from an off-site/project location (vendor, warehouse, etc.) to an on-site/project location, or movement from an onsite/ project location to an off-site/project location. Shipping requirements include packaging and securing of items to protect against damage or deterioration which could occur during movement and transportation, protection against physical damage due to excessive shock or vibration, protection against entry of dirt, water, or other contaminants, and protection against other environmental conditions such as temperature or humidity.

SHOULD – Denotes recommendation or expectation, compliance is expected.

SPECIFICATION – Refers to any design, fabrication or supply specification.

STORAGE – Holding of items in areas that address: the probable maximum period to be held, the inherent physical limitations of the item itself, and required protection from potential hazards such as fire, corrosion, chemical attack and environmental conditions. Storage also includes the requirements for maintaining the integrity and operability of items through routine maintenance, cleaning, or other means of preservation.

SUBSTITUTION – Any change or deviation from issued approved drawings, designs, methods, or contract terms and conditions. Changes in products, materials, equipment, methods of construction, and test criteria required by the Contract Documents proposed by the VENDOR after award of the Contract are considered to be requests for substitution.

VENDOR – The Company responsible for the supply of equipment or services.

WITNESS POINT – An inspection activity beyond which work shall not proceed until an inspector and/or BUYER is notified and (1) the inspection is performed and released, or (2) the inspection is deferred and can be completed at a later time, or (3) a written waiver is issued by the organization who established the witness point.

1.0 PART 1 - GENERAL

1.1 Section Scope

1.1.1 Project Description and Location

This Specification establishes the technical requirements for detailing, furnishing, fabrication, inspection, testing, delivery, storage and installation of stainless steel liner plate and grillage as specified herein and as identified on the BUYER documents for the Low Activity Waste Pretreatment Project (LAWPS) located in the 200 East Area of the Hanford Site in Washington State.

Material to be installed and erected by the VENDOR includes all liner plate, liner plate assemblies, specified grillage, plinths and associated items required to allow for a complete liner plate installation as defined in this Specification and identified on the BUYER documents.

1.1.2 Equipment, Material, and Services Required

The specific Work addressed by this Specification includes but is not limited to furnishing labor, material, equipment, tools, and supervision for the performance of all operations and incidentals necessary for the production and installation of stainless steel liner plate and grillage as described in this Specification. The Work includes but is not limited to the following:

1.1.2.1 Detailing, furnishing, fabrication, inspection, preparation for shipment, and delivery of stainless steel liner plate and carbon steel grillage.

1.1.2.2 Complete shop detail drawings with Bills of Material.

1.1.2.3 Complete erection drawings with all field welds and requirements for nondestructive field examinations indicated as applicable.

1.1.2.4 Furnishing welding materials, perform welding, and inspections and examinations of welds.

1.1.2.5 Sampling, corrosion evaluation of materials and testing of welds and materials, including documentation, as specified.

1.1.2.6 Unloading, sorting, and field storage of all delivered materials.

1.1.2.7 Installation and erection of delivered materials.

1.1.3 Conflicts

The BUYER shall be advised immediately in writing of any conflicts as soon as they are identified. No substitutes or deviations to this specification will be allowed without written acceptance from BUYER.

1.2 Related CSI Sections

01 25 00	Substitutions and Design Changes
01 33 00	Submittals
01 40 00	Quality Assurance
01 60 00	Labeling
01 66 00	Delivery Storage and Handling
03 11 00	Concrete Work

1.3 Codes and Standards

1.3.1 Work shall be performed in accordance with the referenced codes, standards, and documents for this specification.

1.3.2 The following codes and standards, of the exact issue shown, form part of the BUYER basis of design to the extent specified in the applicable sections of this document. In the event of a conflict between documents referenced herein and the requirements of this specification, the requirements of this specification shall take precedence only when this specification's requirements are more stringent or conservative. If a code or standard not listed below is to be applied to the scope (see Section 1.1), apply the latest code or standard as of April 16, 2015.

1.3.3 American Institute of Steel Construction (AISC)

Comply with the following standard, except as modified herein.

- Manual of Steel Construction – 14th Edition, including AISC 360, Specification for Structural Steel Buildings, 2010

1.3.4 American National Standards Institute (ANSI)

Comply with the following standard, except as modified herein.

- ANSI Z49.1-12, *Safety in Welding, Cutting and Allied Processes*

1.3.5 American Society of Mechanical Engineers (ASME)

Comply with the following standards except as modified herein.

- ASME B&PV Code, Section V, 2013 - *Nondestructive Examination*
- ASME B31.3-12, Process Piping, American Society of Mechanical Engineers

1.3.6 American Society for Nondestructive Testing (ASNT)

Comply with the following standard, except as modified herein.

- ASNT SNT-TC-IA, *Recommended Practice for Personal Qualification and Certification in Nondestructive Testing 2011*

1.3.7 ASTM International (ASTM)

Comply with the following standards, except as modified herein;

- ASTM A 36-14, Standard Specification for Structural Steel
- ASTM A 240-15, *Heat-Resisting Chromium and Chromium-Nickel Stainless Steel Plates, Sheet and Strip for Fusion-Welded Pressure Vessels*
- ASTM A 262-15, *Detecting* Susceptibility to Intergranular Attack in Stainless Steels
- ASTM A 276-15, *Stainless and Heat-Resisting Steel Bars and Shapes*
- ASTM A 307-14, *Standard Specification for Carbon Steel Bolts and Studs, 60,000 psi*
- ASTM A 480-14, *Flat-Rolled Stainless and Heat-Resisting Steel Plate, Sheet, and Strip*
- ASTM A 563-15, *Standard Specification for Carbon and Alloy Steel Nuts*
- ASTM F 436-11, *Standard Specification for Hardened Steel Washers*

1.3.8 American Welding Society (AWS)

Comply with the following standards, except as modified herein;

- AWS A2.4-12, *Standard Symbols for Welding, Brazing, and Nondestructive Examination*
- AWS A3.0-10, *Standard Welding Terms and Definitions Including Terms for Adhesive Bonding, Brazing, Soldering, Thermal Cutting, and Thermal Spraying*
- AWS A5.4-12, *Corrosion-Resisting Chromium and Chromium-Nickel Steel Covered Welding Electrodes*
- AWS A5.9-12, *Corrosion Resisting Chromium and Chromium-Nickel Steel Bare and Composite Metal Cored, Standard Arc Welding Electrodes and Welding Rods*
- AWS D1.1-10, *Structural Steel Welding Code Steel*
- AWS D1.6-07, *Structural Steel Welding Code-Stainless Steel*
- AWS QC1-07, *Standard for AWS Certification of Welding Inspectors*

1.3.9 Washington Administrative Code (WAC)

Comply with the following standards, except as modified herein;

- WAC 173-303-640, *Tank Systems*

1.4 System Description

The liner addressed by this Specification supports the removal of spilled waste from the secondary containment system of LAWPS within twenty-four hours, but does not provide a safety function for containment of waste. As such, this is a Commercial Quality Assurance (CQA) system.

This Specification provides for the fabrication, delivery and erection of these liners and the associated supporting grillage placed on the walls and floors of the LAWPS pits and vaults.

1.5 Submittals

Submittals that are listed within this section shall be prepared and processed in accordance with requirements of CSI Section 01 33 00 "Submittals" and shall include all of the required Quality Assurance documentation in accordance with CSI Section 01 40 00 "Quality Assurance" of this specification.

1.5.1 Quality Assurance submittals (Complete list in Section 1.7 Quality Assurance)

1.5.1.1 Calibration Certificates and calibration records for all instruments used/furnished by the VENDOR in accordance with QA Clause B12.

1.5.1.2 Quality Assurance Program for Nonconformance Documentation and Reporting in accordance with QA Clause B22.

1.5.1.3 Certified Weld Inspector (CWI) in accordance with QA Clause B25.

1.5.1.4 Welding Procedures and Qualifications in accordance with QA Clause B28

1.5.1.5 Liquid Penetrant Material Certification in accordance with QA Clause B46.

1.5.1.6 Procurement of Potentially Suspect or Counterfeit Items in accordance with QA Clause B76.

1.5.1.7 Certificate of Conformance on all applicable items in accordance with QA Clause B79.

1.5.2 Technical Submittals include:

1.5.2.1 List of Fabrication Codes and Standards including Revision and/or Issue Date.

1.5.2.2 Vendor Technical Proposal Package, as identified in CSI Section 01 33 00.

A. Project Schedule

B. Drawing List

C. Quality Assurance Program Manual

D. Fabrication/Testing and Inspection Plan (Traveler) in accordance with QA Clause B13.

1.5.2.3 Request for Information (RFI), shall be submitted on BUYER supplied form A-6003-417.

1.5.2.4 Nonconformance Reports/Deficiency Reports shall be approved in accordance with QA Clause B22.

1.5.2.5 Preliminary Design Review Package. BUYER acceptance required.

1.5.2.6 Final Design Review Package. BUYER acceptance required prior to release for shipment.

1.5.2.7 Final Lifetime Records.

1.5.3 Drawings

1.5.3.1 The VENDOR shall submit shop drawings to the BUYER in accordance with the submittal schedule for acceptance.

1.5.3.2 Shop drawings for fabrication of liner plate and grillage shall be prepared in accordance with the AISC Manual of Steel Construction and the requirements of this Specification.

1.5.3.3 Erection drawings shall include as a minimum erection plans indicating the locations, quantities, profiles, piece marks of the assemblies, connection requirements to embeds, and a bill of materials. The erection drawings shall include the unit weight and total weight of each item (i.e. liner plate plus the total weight of material) identified on each drawing.

1.5.4 Certification of Materials

1.5.4.1 Obtain and submit Certified Mill Test Reports (CMTR's), in accordance with QA Clause B49, for all materials furnished except for bolts, bolt nuts and washers as described in Section 2.2.2.2, 2.2.2.3, and 2.2.2.4. CMTR's are required to be traceable to the individual piece marks reference in Section 2.6.5.

1.5.4.2 All material shipments shall be accompanied to the site with the appropriate CMTR certification.

1.5.5 Welding Certifications and Procedures

1.5.5.1 Weld Procedure Specifications and Weld Procedure Qualification Records will be provided for all welds that are performed on process containment components, in accordance with QA Clause B28.

1.5.5.2 Welder Qualification Records will be provided for personnel that perform project work, in accordance with QA Clause B28.

1.5.5.3 Certified Welding Inspector (CWI) Qualifications Records will be provided for personnel that perform project work, in accordance with QA Clause B25.

1.5.5.4 Nondestructive Examination (NDE) Procedures (PT Penetrant Test, VT Visual Test, and Vacuum Box) will be provided, in accordance with QA Clause B31.

1.5.5.5 NDE Personnel Qualification Records will be provided for personnel that perform project work, in accordance with QA Clause B31.

1.5.5.6 Material Control Procedures shall be provided to ensure prevention of component material contamination

1.5.6 Preliminary Design Submittals

Preliminary Design Package shall be submitted for BUYER review.

Submittals to be included in the Preliminary Design Package shall include:

1.5.6.1 Shop drawings.

Shop drawings shall identify liner piecemarks, including their location and connection details.

The purpose of submitting a preliminary design review package is for the BUYER to review and validate the design content and maturity (i.e., verify the design is progressing down the correct path).

1.5.6.2 Delivery, Storage and Handling Plan

The VENDOR shall submit to the BUYER for acceptance a Delivery, Storage and Handling Plan, identifying the VENDOR procedures to be used to meet the requirements of Section 1.6, in accordance with QA Clause B85.

1.5.7 Final Design Submittals

Final design package shall be submitted for BUYER final review and acceptance.

Submittals included in the final design Package shall include

1.5.7.1 Closeout calibration certifications in accordance with QA Clause B12.

1.5.7.2 As Built Diagrams

1.5.7.3 Nonconformance Reports in accordance with QA Clause B22.

1.5.7.4 Certified Material Test Reports (CMTRs) in accordance with QA Clause B49.

1.5.7.5 Weld Documentation

A. Weld maps.

B. Weld Inspection Reports: All welds that are performed on process containment components shall be 100% visual examination per ASME B31.3.

C. Weld History Reports: All welds that are performed on process containment components shall have weld history maintained and logged.

D. Nondestructive Inspection Reports in accordance with QA Clause B31.

E. Liquid Penetrant Material Certification in accordance with QA Clause B46.

1.5.8 Refer to related CSI Section 01 25 00 "Substitutions and Design Changes" for detailed substitution and design change requirements and Request for Information (RFI) forms/guidelines.

1.6 Delivery, Storage and Handling

1.6.1 Handling and Storage

Establish and maintain controls for material handling and storage during fabrication, preparation for shipment and on site storage to prevent damage, distortion, and deterioration. The VENDOR shall identify any special directions for field handling of liner panels (including rigging) for field installation.

1.6.2 Shipping Instructions

Handling, shipping, and delivery shall be in a manner that will protect the finish of the stainless steel, prevent the retention of rain water, and protect the materials from prolonged exposure to mud, dirt and road salt, corrosive vapors, halides, and sulfurs.

1.6.3 Material Damage

For any material improperly detailed, mismarked, incorrectly fabricated, or damaged in shipment, handling or storage shall be replaced or repaired at the expense of the VENDOR.

1.6.4 Refer to related CSI Section 01 66 00 "Delivery Storage and Handling" for delivery storage and handling related requirements and submittals.

1.7 Quality Assurance

The VENDOR Quality Assurance Program shall be submitted to the BUYER for acceptance.

1.7.1 Applicable QA Clauses are summarized in the table below. The full QA Clause definition and associated requirements are located in CSI Section 01 40 00 "Quality Assurance"

Table 1.7-1 Procurement Quality Clause

VENDOR FABRICATION
B12 Use of Calibrated Equipment
B13 Fabrication/Inspection/Test Plan
B19 First Article Inspection-Source
B22 Nonconformance Documentation and Reporting
B25 Certified Weld Inspector (CWI)
B28 Welding Procedures and Qualifications
B31 Nondestructive Examination Process
MATERIAL IDENTIFICATION
B33 Identification of Items with Product Data Sheet
B37 Identification and Traceability of Items
TESTING AND TEST DATA
B46 Liquid Penetrant Material Certification
B49 Certified Material Test Report
B52 Inspection and Test Report
INSPECTION AND ACCEPTANCE CRITERIA
B70 VENDOR Furnished Items
B76 Procurement of Potentially Suspect or Counterfeit Items
B79 Certificate of Conformance
MATERIAL HANDLING
B85 Packaging/Shipping Procedures
B88 Direct Drop Shipment

1.7.2 Hold Points

1.7.2.1 The following verification points required by this section shall be in accordance with CSI Section 01 40 00, "Quality Assurance" verified by the BUYER, as applicable.

At a minimum, the following witness and hold points shall apply:

Table 1.7-2 Hold Point Verification

Verification Point Description	Type of Verification
Prior to Initial Production Welding (First Weld*)	**W**
Prior to Testing	**H**
Prior to Inspections	**H**
Prior to Acceptance Testing	**NA**
Prior to Shipping	**H**

*First Weld Strike for Each Weld Procedure (H) Hold, (W) Witness

1.7.2.2 The VENDOR shall provide required notifications of verification points in accordance with CSI Section 01 40 00, "Quality Assurance" as applicable, and shall not proceed past required hold points without written authorization from the BUYER QA representative.

1.8 Site Conditions

1.8.1 City, State, Country

Hanford Site, Richland, Washington, United States

1.8.2 Access - Roads, Highways, Transportation

The LAWPS will interface with existing roadways.

1.8.3 Site - Size, Legal Description, Orientation, Plans

1.8.3.1 The site is located in the 200 East Area of the Hanford Site near Richland, Washington. This site may be accessed by WTP Loop Road from the north or by 4th Street from the south.

1.8.3.2 The LAWPS facility contains all new structures.

1.8.4 Climate

1.8.4.1 Refer to related CSI Section 01 66 00 "Delivery Storage and Handling" for storage condition.

1.8.4.2 The liners will be installed in shielded and ventilated concrete vaults and are not subject to outdoor environmental conditions during operation. During delivery, all equipment may be exposed to the outdoor conditions specified below.

Indoor Vault Conditions:
Temperature range: Normal: 68°F to 100°F
Faulted: 12°F to 125°F
Relative humidity: 0 to 100%.

Delivery/Outdoor Environmental Conditions provided for information:
Temperature range: -25°F to 115°F (direct sunlight)
Relative humidity: 0 to 100%.

2.0 PART 2 - PRODUCTS

2.1 Manufacturers (Not Used)

2.2 Materials

2.2.1 Stainless Steel Liner Plate

2.2.1.1 All stainless steel plates, sheets and strips, shall conform to ASTM A 240 type 304L, hot rolled. Liner plate finish shall be No. 2B finish, cold-rolled, bright finish, per ASTM A 480. Tolerances of stainless steel plates, sheets, and strips shall conform to ASTM A 480.

2.2.1.2 Stainless steel bars shall conform to ASTM A 276 type 304L; hot-finished, Condition A.

2.2.1.3 Stainless steel welding rods and bare electrodes shall conform to AWS A5.9 ER308L or ER308LSi for welding type 304L stainless steel and to ER309L or ER309LSi for welding type304L stainless steel to carbon steel.

2.2.1.4 Stainless steel covered welding electrodes shall conform to AWS A5.4, E308L for welding type 304L stainless steel and to E309L for welding type 304L stainless steel to carbon steel.

2.2.2 Carbon Steel Grillage

2.2.2.1 All embedded carbon steel plates and shapes shall conform to ASTM A 36.

2.2.2.2 Bolts shall conform to ASTM A 307, Grade A.

2.2.2.3 Bolts nuts shall conform to ASTM A 563, Grade A, hex.

2.2.2.4 Washers shall conform to ASTM F 436.

2.2.2.5 Studs shall conform to BUYERS design documents.

2.3 Equipment (Not Used)

2.4 Components (Not Used)

2.5 Fabrication

2.5.1 General

2.5.1.1 Welding symbols shall be in accordance with AWS A2.4.

2.5.1.2 Definitions of welding processes, methods, techniques, and applications shall be in accordance with AWS A3.0.

2.5.1.3 All welding of stainless steel shall be performed in accordance with AWS D1.6 and this specification except that in the event of conflict, the VENDOR shall contact the BUYER for resolution.

2.5.1.4 All welding of carbon steel studs shall be in accordance with AWS D1.1 Section 7.

2.5.1.5 VENDOR shall ensure that safety measures for the protection of welders and operators involved in welding and cutting shall be in accordance with the practices specified in the ANSI Z49.1, plus all local, state, federal, and other governing regulations.

2.5.1.6 All edges shall be machine cut, sheared, or ground. Sharp or rough corners and edges shall be ground off, rounded, or chamfered smooth and shall be free of fins, tears, cracks, and other defects which would adversely affect the quality or strength of a weld or safety of individuals handling the material.

2.5.1.7 All liner plate shall be fabricated in a manner to prevent wrinkles, ripples, or sharp discontinuities.

2.5.1.8 Assemblies that are to be field assembled and installed where accuracy of dimensions, alignment, or clearance is critical (as defined by the BUYER documents) shall be preassembled in the shop and checked for compliance with the drawings. Errors or discrepancies shall be corrected before the assembly is shipped to the jobsite.

2.5.1.9 Unless otherwise shown, cold formed corners of liner plate shall have a minimum radius of four (4) times the plate thickness for inside bend radius. VENDOR may submit alternate detail to BUYER for review/acceptance.

2.5.1.10 All welds on the back side of liner plate shall be flat or flush. No reinforcement or weld cap will be allowed.

2.5.1.11 The VENDOR shall be responsible for field measuring and verifying all concrete walls and floors in areas identified to have stainless steel liner plate installed. Locations of all embed, sumps, equipment bases, etc. shall be

referenced on the VENDOR's shop drawings. Field dimensions shall be coordinated with the shop drawings prior to liner plate fabrication.

2.5.1.12 BUYER reserves the right to remove test specimens from any portion of the work to verify the quality of the welding. The VENDOR, at his expense, shall repair or replace any base metal or filler metal found to be defective.

2.5.1.13 The measured leg (w) of a skewed-T joint weld is defined as the perpendicular distance from the surface of the joint to the opposite toe. See Appendix A. This Section reflects the Project Civil, Structural & Architectural approaches to sizing the welds and how they are shown on the BUYER documents.

2.5.2 Liner Plate Welding

2.5.2.1 Welding shall conform to the VENDOR's written procedure, the BUYER documents, and as specified below.

2.5.2.2 Plates jointed by butt welding shall be matched All seam welds shall be full penetration butt welds, except where shown otherwise. Fillet and plug welds where shown shall blend smoothly with the base material and be of uniform size. Plug welds shall be "filled-out" with weld metal to eliminate puddling or pooling. Seal welds between liner material and embedded steel items shall be provided with steel backing to assure a leaktight seam prior to inspection in accordance with section 3.3.3.

2.5.2.3 accurately and retained in position during welding operations. Misalignment in a flat plane across complete joints shall not exceed 1/16 of an inch on walls, and flush on pooling surface in accordance with the limitations of Sections 2.5.2.4 and 2.5.2.5 of this Specification.

2.5.2.4 Welding shall be sufficiently smooth and free of slag, cracks, pinholes, lack of penetration, and completely fused to the adjacent weld beads and base material to facilitate the proper application of the subsequent weld layers. In addition, the cover pass shall be free from coarse ripples, irregular surfaces, deep ridges, or valleys between beads. The acceptance criteria for visual acceptance shall meet the requirements of AWS D1.6, Section 6.28, *Statically Loaded,* except that no pinholes or lack of penetration/fusion will be acceptable. Welds shall be ground flush in pooling areas (i.e. floor areas). Grinding of welds on walls and ceilings will not be required unless the weld cap exceeds 1/8 of an inch in height above the nearby welded surfaces. All finish on grinding shall match the 2B material finish unpolished.

2.5.2.5 Surface defects, such as these caused by removal of temporary attachments, arc strikes, mechanical damage, etc., shall be ground to remove the defects. Grinding shall not reduce the weld or base metal by more than 1/32 of an inch of the specified thickness or 10% of the specified thickness, whichever is less. All surface imperfections or arc strikes which the removal of will reduce the specified plate thickness to less than that stated above, shall be repaired by welding. Specified thickness is defined as that thickness stated on the BUYER

documents. All weld repairs and areas where temporary welds have been made shall be suitably ground, and tested, in accordance with Section 3.3.3 of this Specification. Repaired areas finish shall match the 2B material finish unpolished.

2.5.2.6 All field welds to embed plates will require backing plates.

2.5.2.7 Temporary attachments shall be removed flush with the base metal without encroaching on the required minimum base metal thickness. Where a surface has been restored by welding, all areas from which attachments have been removed shall be examined in accordance with Section 3.3.3 of this Specification.

2.6 Shop Quality Control

2.6.1 Personnel Qualification

2.6.1.1 Welder Qualification

All welding shall be performed by welders qualified in accordance with the requirements of this Specification, the applicable code, and the VENDOR's written welding procedure. The BUYER shall be allowed to review, when requested, performance qualification records for individual welders for conformance to Specification requirements.

2.6.1.2 Weld Inspector Qualification

All visual examinations shall be performed by personnel certified in accordance with ASNT Recommended Practice SNT-TC-1A, Level I, II, or III or certified in accordance with AWS QC1 as either a Certified Welding Inspector (CWI) or a Senior Certified Welding Inspector (SCWI). All other nondestructive examinations shall be performed by personnel certified in accordance with ASNT Recommended Practice SNT-TC-1A, Level II or III. VENDOR NDE procedures shall be submitted to the BUYER for review and permission to proceed.

VENDOR NDE certifications shall be submitted to the BUYER, in which case examination shall not proceed until authorized by the BUYER.

All NDE procedures, including visual, shall meet the requirements of Section 3.3.3. Use of NDE procedures meeting the requirements of ASME Section V are acceptable provided prior BUYER acceptance is obtained. In addition, all other records pertaining to inspection shall be available to the BUYER.

2.6.2 Inspection

2.6.2.1 The VENDOR shall visually inspect all completed welds. Defective welds shall be repaired in accordance with AWS D1.6, Paragraph 5.12 for Stainless Steel and AWS D1.1 Section 7 for studs, using BUYER accepted procedures. The repaired welds shall be 100 percent reexamined using the same method that disclosed the original defect(s).

2.6.3 Cleaning and Protection

2.6.3.1 Surfaces shall be cleaned and free of all mill scale, grease, dirt, sand, chloride contamination and other foreign materials, and protected for shipment and erection. Care shall be taken to prevent iron contamination of stainless steel surfaces. All compounds that may come in contact with stainless steel material shall be free of lead, bismuth, zinc, mercury, antimony, cadmium, and tin. The inorganic halogen content shall be less than 200 ppm; total halogen and sulfur content shall not individually exceed 1 percent by weight.

2.6.3.2 All weld spatter, mill scale, grease, dirt, tape marks and other foreign matters shall be removed from any surface.

2.6.3.3 Stainless steel surfaces shall receive no paint other than piece marks.

2.6.3.4 Any paper or plastic sheet applied during fabrication to the surfaces of stainless steel sheets to protect surfaces from abrasion during handling shall be removed in accordance with the VENDOR's written instructions. Liner plate shall be suitably protected by a method approved by the BUYER.

2.6.3.5 Final cleaning prior to acceptance of the Work shall include a rinse with water or solvents to remove any carbon/iron contamination in accordance with the VENDOR's written instructions.

2.6.4 Testing

2.6.4.1 Corrosion and Bend Test Evaluation of Stainless Steel

The stainless steel material covered in this Specification is intended for service in nitric acid and shall be corrosion evaluated in accordance with ASTM A 262, Section 1.1.4, *Practice E*.

Bend test shall be performed and examined as described in ASTM A 480, Section 17.3. The bend test shall withstand cold bending without cracking on the outside of the bent portion.

2.6.4.2 The Corrosion and Bend Test Reports shall be included with the CMTR's.

2.6.5 Identification

All shop fabricated pieces shall have identifying piece marks, and these piece marks shall be clearly located on the erection drawings furnished by the VENDOR. Piece marks shall be made with approved material (See CSI Section 01 60 00 of this Specification) placed on the exposed side of the liner plate after installation.

3.0 PART 3 - EXECUTION

3.1 Preparation

3.1.1 Grillage Placement

3.1.1.1 All grillage installed prior to placing of concrete shall be fastened in place by the VENDOR to prevent displacement during concrete placing operations. All required welding of the grillage shall be in accordance with AWS D1.1. All grillage items shall be accurately positioned in accordance with BUYER design documents, securely fastened in place, and accepted by the BUYER.

3.1.2 Concrete Placement

3.1.2.1 The BUYER will require a minimum of seven days to place concrete in accordance with CSI Section 03 11 00 after acceptance of the grillage installed by the VENDOR. The BUYER will place concrete to the required slopes using the grillage as screed lines, and upon completion will turn the area over to the VENDOR to complete installation of the liner plate after cleaning exposed embeds free of all grout, cement coating, or other foreign material.

3.1.2.2 Where the existing concrete floor finish surfaces exceeds 3/16 of an inch (plus or minus in a 4'-0" length) of the established surface alignment shown, the concrete surface will be chipped, ground or reworked by the BUYER to provide a smooth plane surface. Walls and overhead surfaces shall meet the following finish requirements prior to placement of liners:

- No sharp fins/edges are permitted
- No abrupt changes greater than ¼ inch are permitted where forms butt or join
- Gradual changes such as bows, bulges and waves are permitted

In no case shall stainless steel be welded to embedded metal where a high-low gap of more than 1/16 of an inch exists between the stainless steel and the embed. The liner plate weld joint shall bear a minimum of 1/2 inch on the embed.

3.1.2.3 The VENDOR shall ensure that any exposed embeds to be welded to stainless steel are cleaned free of all grout, cement coating (i.e. red oxide or inorganic zinc) or other foreign material, and shall be maintained in this condition during welding of the material.

3.2 Erection, Installation, Application

3.2.1 Erection

3.2.1.1 A joint inspection shall be performed by the VENDOR and the BUYER for acceptance of the liner plate embeds and concrete profile prior to start of liner plate installation. Grillage may be reworked and welded, as required, to ensure acceptable fit-up of the liner plates.

3.2.1.2 Minor misfits, which can be remedied by a moderate amount of reaming, slight cutting, and chipping may be corrected by the VENDOR when, as determined by the BUYER, such operations will not be detrimental to the strength or appearance of the structure. All shop errors shall be documented and the method of correction shall be performed in compliance with the applicable Codes, this specification, and approved VENDOR Procedural requirements.

3.2.1.3 The VENDOR may weld temporary attachments to liner plate sections as required for erection. Carbon steel attachments, if used, shall be welded using type 309L or 309LSi weld filler metal. Attachments shall be welded using qualified welders.

3.2.1.4 All temporary bracing and attachments shall conform to AISC Manual of Steel Construction.

3.2.1.5 All temporary bracing and attachments shall be removed from the exposed side of the liner plate after erection or after placement of concrete as approved by the BUYER. Any finish that was affected by the temporary bracing and attachments shall match the 2B material finish unpolished subject to acceptance by the BUYER.

3.2.1.6 The VENDOR's erection procedure shall address:

- Chemical requirements of all non-permanent materials used in contact with the stainless steel to assure contamination of the liner will not occur.
- Means and methods of handling.

- Traceability of consumables, including welding rods.

- Installation sequencing
- Interim Inspections
- Final Inspection

3.2.1.7 Thermal straightening may be used on stainless steel provided the VENDOR submits a procedure for acceptance that shall include at least the following:

- There shall be no flame impingement on the stainless steel.
- Maximum temperature of the stainless steel shall not exceed 400 °F.

- The stainless steel temperature shall be monitored with contact pyrometers, and indicating crayons shall be used for continuous monitoring of the affected area to ensure that no area exceeds 400 °F.
- A maximum deformation for thermal straightening shall be specified.

3.2.1.8 The VENDOR shall maintain weld maps providing traceability to each weld, welder, and welding procedure.

3.3 Field Quality Control

3.3.1 Personnel Qualification

Welder qualification (AWS DI.6 Annex "M" Form) and CWI qualification records shall be made available to the BUYER upon request. All welders and welding operators shall be qualified per AWS D1.6 Section 4 Part B and AWS D1.1 Section 7, and shall have certificates on file. The BUYER reserves the right to require the testing or retesting of welders for qualification in accordance with the AWS D1.6 code, Section 6.4. All cost and material required for the qualification of welders shall be at the VENDOR's expense.

3.3.2 Test and Inspection Records

A complete record of all examinations, repairs, and reexaminations shall be maintained by the VENDOR and shall be made available to the BUYER as Work is completed. These records shall be submitted to the BUYER at the conclusion of the Work.

3.3.3 Examinations

3.3.3.1 Welds

3.3.3.1.1 Extent of Testing

a) Visual Inspection

All welds shall be visually Inspected by the VENDOR in accordance with AWS D1.6 Section 6.28.1 *Statically Loaded.*

b) Vacuum Box Technique Inspection

All accessible welds shall be tested using the vacuum box technique.

c) Liquid Penetrant Examination

Ten percent (10 %) of all welds tested by vacuum box technique will be tested by liquid penetrant examination. The locations will be determined in the field by the BUYER's inspector.

Those welds inaccessible to testing by vacuum box technique will be tested by liquid penetrant examination.

Those welds tested by liquid penetrant examination due to inaccessibility for vacuum box inspection shall not to be included in this 10% inspection set.

3.3.3.1.2 Bubble Testing- Vacuum Box Technique

Bubble Testing- Vacuum Box Technique shall be performed by the VENDOR to the extent specified in Section 3.3.3.1.1 in accordance with the VENDOR's written

procedure, ASME B&PV Code, Section V, Article 10, Appendix (Bubble Test-Vacuum Box Technique); and the following sections.

Personnel performing bubble testing-vacuum box technique shall be certified in accordance with SNT-TC-1A and their qualification and certification records shall be made available and retained by the VENDOR until completion of all Work.

- Acceptance Standard

  The presence of continuous bubble growth on the weld seam is unacceptable.

3.3.3.1.3 Liquid Penetrant Examination

Unless specified otherwise on the BUYER documents, examinations shall be performed by the VENDOR in accordance with the VENDOR's written procedure and the following subparagraphs.

a) Liquid penetrant examination shall be by the solvent removable method.

b) Personnel performing liquid penetrant examinations shall be qualified in accordance with SNT-TC-1A. The qualification test records shall be made available to the BUYER for review and shall be retained by the VENDOR until shipment of all items.

3.3.3.2 Surface Profile

The VENDOR shall maintain a record of inspection of walls and floor profiles and the repairs made

3.4 Adjusting and Cleaning (Not Used).

3.5 Demonstration

3.5.1 Acceptance Standard

The acceptance criteria shall be in accordance with AWS D1.6, paragraph 6.7.6 as applicable. In the event of failure an area equivalent in size to the initial test area shall be tested.

3.5.1.1 Visual Acceptance

Visual acceptance of welds shall meet the requirements of AWS D1.6, Section 6.28.1, *Statically Loaded,* except that no pinholes or lack of penetration/fusion will be acceptable.

3.5.2 Defective Work Repair

In case of repair of defective work, the repaired area and a minimum of two (2) inches each side along the weld length thereof shall be reexamined. Re-examination will only be performed in accordance with the method that identified the defect.

3.6 Protection

The VENDOR shall establish and maintain controls for material handling and storage during fabrication, preparation for shipment and on-site storage to prevent damage, distortion, and deterioration.

3.6.1.1 Storage

All material shall be stockpiled in a manner to prevent damage to the finish and form and to avoid contamination

3.6.1.2 Handling

Particular care shall be taken in handling and installing liners to avoid scratching of surfaces to be exposed and damage to edges.

4.0 LIST OF APPENDICES

4.1 **APPENDIX A – SKEWED T-WELD DETAILS 23**

4.1 APPENDIX A - SKEWED T-WELD DETAILS

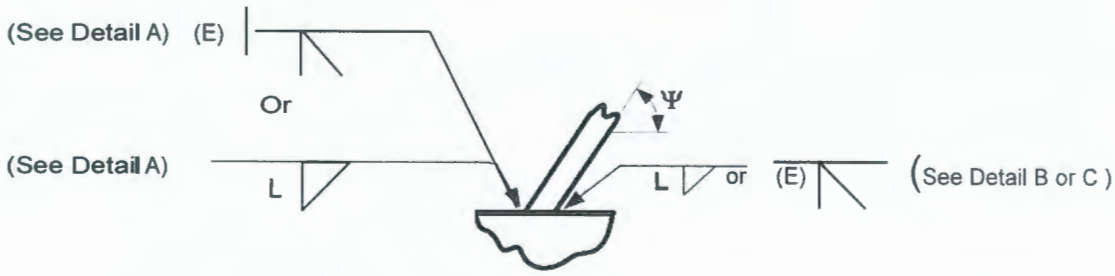

Drawing Callout

L =Leg (size) of fillet weld on skewed T-joint. For a skewed joint, see Annex II of AWS D1.6 to determine inspection dimension "w" shown in Details A and B.

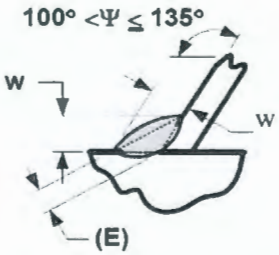

Detail A

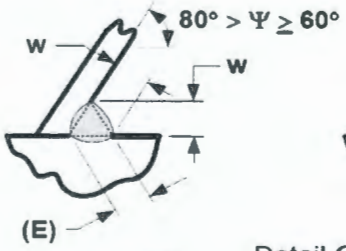

Detail B

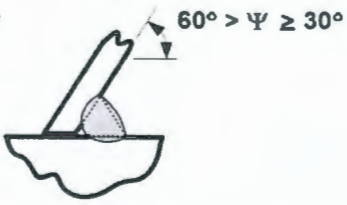

Detail C
(Not Prequalified)

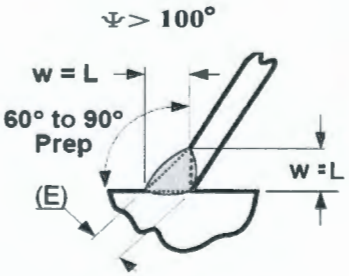

Detail A (Alternate)

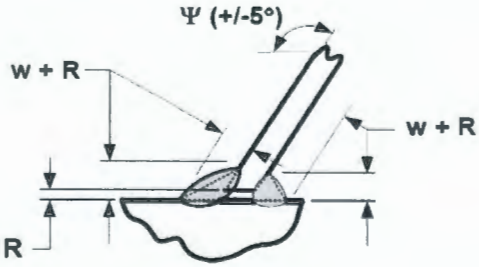

Fit-Up Tolerances

For R < 1/16, weld size w is acceptable.
For 1/16 ≤ R ≤ 3/16, weld size must be w + R

Detail A (Alternate) may be used instead of Detail A if the skewed member is prepped as shown and the same size weld is made. The amount of machining or grinding, etc. should not be more than that required to achieve the required weld size (w).

w = Measured leg of skewed T-joint fillet weld (inspection dimension) per AWS D1.6.

(E) = Effective Throat R =Root Gap

Skewed-T Weld Details

SPECIFICATION

15-2-001

CROSS FLOW FILTER SYSTEM PROCUREMENT SPECIFICATION

AECOM ATKINS AREVA

LOW ACTIVITY WASTE PRETREATMENT SYSTEM

Project No. 31269 (T5L01)

Document No. 15-2-001

Safety Related ☒ Non-Safety Related ☐

CROSS FLOW FILTER SYSTEM PROCUREMENT SPECIFICATION

BRIAN DENNIS SEVERSON
STATE OF WASHINGTON
53874
REGISTERED
PROFESSIONAL ENGINEER

5/16/17
FOR PERMITTING
BDS 5/16/17

Prepared for
Washington River Protection Solutions, LLC

Revision: 1 Status: Final

REVISION PAGE

Project Name:	LAWPS	Discipline:	Mechanical
Client:	Washington River Protection Solutions	Project Number:	31269 (T5L01)
		Latest Revision:	1

Revision Signatures

B. Severson Brian Severson Digitally signed by Brian Severson Date: 2017.05.16 06:16:18 -07'00'		D. Skeath David Skeath Date: 2017.05.16 06:23:16 -07'00'	
Prepared by L Ulbricht Larry Ulbricht Digitally signed by Larry Ulbricht Date: 2017.05.16 06:32:26 -07'00'	Date	Approved by (SDE/Lead) P. Bell Paul Bell Digitally signed by Paul Bell Date: 2017.05.16 08:51:00 -06'00'	Date
Checked by S. Lin SiYuan Lin 2017-05-16 11:14:48	Date	Approved by (QA) For DP D Priebe Michael Schultze Digitally signed by Michael Schultze Date: 2017.05.16 09:38:18 -06'00'	Date
Verified by (if required)	Date	Approved by (PEM)	Date

Status	Rev. No.	Date	Prepared By	Pages	Description of Changes
Final	0	9/16/16	R.S. Christensen	154	Approved for Bid
Final	1	5/16/2017	B.D. Severson	149	Approved for Award Revised in entirety; Remove design, fabrication and procurement of specialty valves from specification.

Safety Related	Quality Level
Yes ☒ No ☐	Full QA ☒ Enhanced QA ☐ Commercial QA ☐

Table of Contents

1 SCOPE 1
2 APPLICABLE DOCUMENTS 3
2.1 Government Documents 4
2.2 Non-Government Documents 4
2.3 Other Documents 8
3 REQUIREMENTS 8
3.1 Cross Flow Filter System Functional Requirements 8
3.2 Cross Flow Filter Functional Requirements 8
3.3 Cross Flow Filter Technical Requirements 9
3.4 Item Definition 21
3.4.1 Interface Definition 23
3.5 Characteristics 24
3.5.1 Safety Characteristics 24
3.5.2 Functional Characteristics 24
3.5.3 Cross Flow Filter System Physical Characteristics 27
3.5.4 Reliability 33
3.5.5 Availability 33
3.5.6 Inspectability 33
3.5.7 Maintainability 33
3.5.8 Environment 34
3.5.9 Transportation and Storage 34
3.6 Design and Construction 35
3.6.1 Parts/Materials/Processes 35
3.6.2 Radiation 37
3.6.3 Cleanness and Foreign Material Exclusion 37
3.6.4 Corrosion of Parts 37
3.6.5 Protective Coatings 38
3.6.6 Interchangeability 38
3.6.7 Identification and Marking 38
3.6.8 Nameplate 42
3.6.9 Human Factors Engineering 43
3.6.10 Document Submittals 43
3.6.11 Personnel and Training 47
3.6.12 In-Tank Transfer Pump Design and Fabrication 47
3.6.13 ASME Process Vessels Fabrication (CFF,FFT, and Backpulse Tank) 70
3.6.14 Valves 84
3.6.15 Structural Steel 85
3.6.16 Piping 86
3.6.17 Piping Materials 91
3.6.18 Pipe Welding 93
3.6.19 Jumper Fabrication 110
3.6.20 I&C Requirements 110
3.6.21 Electrical Requirements for Mechanical Equipment 111
3.6.22 NPH Requirements 113
4 QUALITY ASSURANCE 121
4.1 General 121
4.2 QA Submittals 122

4.3 Quality Assurance Requirements 123
4.3.1 VENDOR Design 123
4.3.2 Electrical Equipment Requirements 124
4.3.3 Inspection and Testing 124
4.3.4 Receipt Inspection 124
4.3.5 Noncompliances and Nonconformance 125
4.3.6 VENDOR Procurement of FQA items/Materials 126
4.3.7 Suspect/Counterfeit Parts 126
4.3.8 Measuring and Test Equipment 126
4.4 Acceptance Criteria 127
4.5 Verification 128
4.6 Inspections and Tests 128
4.6.1 Factory Acceptance Test Plan/Test Procedures 128
4.6.2 Factory Acceptance Test Report 129
4.6.3 Functional Test Plan/Test Procedures 129
4.6.4 Functional Test Report 129
5 PREPARATION FOR DELIVERY 130
5.1 General 130
5.2 Preservation and Packaging 130
5.3 Packing 131
5.4 Marking 132
5.5 Handling 132
5.5.1 Lift and Rigging Plan 132
5.5.2 Lifting Attachments and Equipment Design 133
5.5.3 Lift Point Marking 134
5.5.4 Critical Welds 134
5.5.5 Special Lifting Devices 134
5.5.6 Below-the-Hook Device Markings 134
5.6 Shipping 135
5.6.1 Transport and Tie-Down Instructions 135
5.6.2 Unpacking and Assembly Drawing 135
5.6.3 Offloading 135
6 Notes 135
Appendix A – Piping Pre-Pressure Test Checklist 136
Appendix B – Status of Instruments During Pressure Test 137
Appendix C – Piping Pressure Test Checklist 138

List of Figures

Figure 1-1: Equipment Supplied 3
Figure 3-1: Cross Flow Filter Module 11
Figure 3-2: Jumpers and Interface Connections 12
Figure 3-3: Equipment Identification 13
Figure 3-4: CFF Filter Module Filter Skid Assembly 14
Figure 3-5: CFF Filter Valve Skid Assembly 15
Figure 3-6: Heat Exchanger CFF-EXH-104 Assembly 16
Figure 3-7: Cross Flow Filter Assembly 17
Figure 3-8: CFF Cartridge Assembly 18
Figure 3-9: CFF Cartridge Mounting Plate O-Rings 18
Figure 3-10: CFF Cartridge to Base O-Ring Seal 19
Figure 3-11: CFF Cartridge Drainage 19
Figure 3-12: CFF Cartridge to Filter Base Connection 20
Figure 3-13: CFF Cartridge Filter Head Flow 20
Figure 3-14: NF Label Coding 39
Figure 3-15: NH Label Coding 40
Figure 3-16: NL Label Coding 41
Figure 3-17 Acceptable Nozzle Connections 72
Figure 3-18: Unacceptable Nozzle Connections 72
Figure 3-19: Integral Nozzle Reinforcement Methods (For FQA & EQA Fabrication) 73
Figure 3-20: Deleted 85
Figure 3-21: Pipe Specification 93
Figure 3-22: 90 Degree Branch Connection Legend and Chart 93

List of Tables

Table 3-1 Tanks and Vessels 25
Table 3-2 Deleted 25
Table 3-3 Process Pumps 26
Table 3-4 Pressurized Process Piping and Instruments 27
Table 3-5 Physical Characteristics 29
Table 3-6 Radionuclide Inventory for Nominal Feed to Cross-Flow Filters 31
Table 3-7 Chemical Inventory for Nominal Feed to Cross-Flow Filters 32
Table 3-8 Pump Fabrication Traveler Hold Points 70
Table 3-9 Vessel Fabrication Traveler Hold Points 80
Table 3-10 Deleted 85
Table 3-11 Piping Hold Points 101
Table 3-12 LAWPS Free Field (Ground Surface Level) Response Spectra 118
Table 4-1 Procurment Quality Clauses 122

LIST OF TERMS

Abbreviations and Acronyms

ACI	American Concrete Institute
AFC	Approved for Construction
AISC	American Institute of Steel Construction
ANSI	American National Standards Institute
API	American Petroleum Institute
APP	Approval Required prior to work
ASCE	American Society of Civil Engineers
ASME	American Society of Mechanical Engineers
ASNT	American Society for Nondestructive Testing
ASTM	American Society for Testing and Materials
AWS	American Welding Society
BBE	Bevel Both Ends
BE	Bevel End
BHP	Brake Horse Power
BPVC	Boiler and Pressure Vessel Code
BQR	BUYER's Quality Representative
BTH	Below The Hook
BTR	BUYER's Technical Representative
CCTV	Closed Circuit Television
CFF	Cross Flow Filter
CGI	Commercial Grade Item
CMTR	Certified Materials Test Report
C of C	Certificate of Conformance
CQA	Commercial Quality Assurance
CWEng	Certified Welding Engineer
CWI	Certified Welding Inspector
DC	Direct Current
DCN	Design Change Notice
DOE	Department of Energy
DOT	Department of Transportation
DPD	Design Proposal Drawing
DST	Double Shell Tank
EXCH	Heat Exchanger
EXH	Exhaust

EIN	Equipment Identification Number
EPDM	Ethylene Propylene Diene Monomer (M-Class)
EQA	Enhanced Quality Assurance
ESL	Evaluated Suppliers List
FAT	Factory Acceptance Test
FCAW	Flux Core Arc Welding
FE	Flow Element
FFT	Filter Feed Tank
FIT	Flow Indicating Transmitter
FM	Factory Mutual
FQA	Full Quality Assurance
FV	Flow Valve
FW	Field Weld
GMAW	Gas Metal Arc Welding
GTAW	Gas Tungsten Arc Welding
HOA	Hands Off Auto
HVAC	Heating, Ventilating, and Air Conditioning
I&C	Instrumentation and Controls
IBC	International Building Code
ID	Inside Diameter, or Identification
IEC	International Electrotechnical Commission
IEEE	Institute of Electrical and Electronics Engineers
INF	Information only
IQRPE	Independent Qualified Registered Professional Engineer
ISA	International Society of Automation
ISRS	In-Structure Response Spectra
IX	Ion Exchange
LAWPS	Low Activity Waste Pretreatment System
LIT	Level Indicating Transmitter
LS	Limit State
MAWP	Maximum Allowable Working Pressure
MDMT	Minimum Design Metal Temperature
MDS	Mechanical Data Sheet
MSR	Master Submittal Register
MT	Magnetic Particle Inspection
M&TE	Measuring and Test Equipment
NBIC	National Board Inspection Code

NCR	Nonconformance Report
NDE	Nondestructive Examination
NDT	Nondestructive Testing
NEC	National Electric Code
NEMA	National Electric Manufacturer's Association
NFPA	National Fire Protection Association
NIST	National Institute of Standards and Technology
NPH	Natural Phenomena Hazard
NPS	Nominal Pipe Size
NPSH	Net Positive Suction Head
NPSHA	Net Positive Suction Head Available
NPSHR	Net Positive Suction Head Required
NQA	Nuclear Quality Assurance
NRTL	Nationally Recognized Testing Laboratory
OD	Outside Diameter
OR	Operability and Reliability
OSHA	Occupational Safety and Health Administration
PFI	Pipe Fabrication Institute
PIT	Pressure Indicating Transmitter
PMI	Positive Material Identification
PO	Purchase Order
PPM	Parts per Million
PQR	Procedure Qualification Records
PSSH	Packaging, Storage, Shipping, and Handling Plan
PSV	Pressure Safety Valve
PT	Penetrant Testing
PWHT	Post Weld Heat Treatment
P&ID	Piping and Instrumentation Diagram
QA	Quality Assurance
QAP	Quality Assurance Program
RC	Risk Category
RCSC	Research Council on Structural Connections
REC	Record only
RFFE	Raised Face End Flange
RFI	Request for Information
RPM	Revolutions per Minute

RRS	Required Response Spectrum
RT	Radiographic Testing
RTD	Resistance Temperature Detectors
SAW	Submerged Arc Welding
SCI	Suspect Counterfeit Items
SDC	Seismic Design Category
SIF	Safety Instrumented Functions
SIL	Safety Integrity Level
SMAW	Shielded Metal Arc Welding
SN	Supernatant
SOW	Statement of Work
SRSS	Square Root of the Sum of the Squares
SSC	Structures, Systems, and Components
TCP	Transmission Control Protocol
TE	Temperature Element
TMP	Transmembrane Pressure
TOC	Total Organic Carbon
TRS	Test Response Spectrum
UHMWPE	Ultra High Molecular Weight Polyethylene
UL	Underwriters Laboratories
USA	United States of America
UT	Ultrasonic Testing
UV	Ultraviolet
VDC	Volts Direct Current
VFD	Variable Frequency Drive
VLR	Remote Manual Valve
WAC	Washington Administrative Code
WPQ	Welder Performance Qualification
WPS	Welding Procedure Specification
WQTR	Welder Qualification Test Records
WRC	Welding Research Council
WRPS	Washington River Protection Solutions
XV	On/Off Valve

Units

U.S. customary and SI units

Definitions

BUYER – The company for whom the VENDOR is performing work or services.

COMMERCIAL QUALITY ASSURANCE (CQA) - Level of controls for those items, services, or processes where, based on an evaluation of risk or nuclear safety, no additional quality controls beyond the provider's published or stated attributes of the item, service, or process is required.

CRITICAL DIMENSION – Important dimensions or tolerances that, once verified, will provide reasonable assurance that the component will perform its intended safety function.

DESIGN CHANGE – Within the context of this specification, a DESIGN CHANGE is technically equivalent to a SUBSTITUTION (see SUBSTITUTION). However, the term DESIGN CHANGE may be used to refer to more significant changes to the design compared to a simple substitution.

DEVIATION – any departure from the requirements contained in the purchase order and specification which VENDOR proposes to incorporate if approved by BUYER.

ENHANCED QUALITY ASSURANCE (EQA) - Level of controls for those items, services, or processes where, based on an evaluation of risk or nuclear safety, additional controls beyond the provider's published or stated attributes of the item, service, or process are needed to verify critical attributes.

FULL QUALITY ASSURANCE (FQA) - Level of controls applied for items services, or processes that are commensurate with the controls invoked under American Society of Mechanical Engineers (ASME) Nuclear Quality Assurance (NQA)-1 or other appropriate national consensus standard.

HANDLING - The movement or transportation of items following receipt from offsite/ project locations. This includes movement within storage areas and movement/transportation from receipt or storage areas to field locations. Handling requirements include the need for special handling tools and equipment, restrictions on material composition of surfaces in contact with the item, protection against damage or deterioration, which could occur during movement and placement, protection against physical damage due to excessive shock or vibration, and protection against entry of dirt, water, or other contaminants.

HOLD POINT – A mandatory inspection activity beyond which work shall not proceed until (1) the inspection is performed by an independent inspector and/or BUYER and acceptance is authenticated, or (2) a written release is authorized by the organization who established the hold point.

MORE CONSERVATIVE – "More conservative" shall be interpreted as "more protective of the health, safety and well-being of Site workers and facilities, the public, and environment, as applicable."

NONCONFORMANCE – a deficiency in component characteristic, as defined in BUYER approved drawings and documents.

PROCUREMENT QUALITY CLAUSES (QA CLAUSES) – Procurement quality clauses are to be used for the acquisition of items and services. The clauses establish contractual obligations for quality program systems, identification, traceability, document submittals, testing, reporting, qualification, special process controls, inspection, etc.

PRODUCT DATA – Printed information including, but not limited to, catalog cuts, color charts, illustrations, diagrams, templates, performance curves, brochures, and other forms of Product literature.

QUALITY ASSURANCE RECORDS – Quality assurance plans, procedures, and records, including completed documents that furnish evidence of the quality of an item or activities affecting quality.

RATED LOAD – The maximum load that can be lifted by the device.

SHALL / MUST – Denotes project requirements, compliance is required

SHIPPING – The movement of items from an off-site/project location (VENDOR, warehouse, etc.) to an on-site/project location, or movement from an onsite/ project location to an off-site/project location. Shipping requirements include packaging and securing of items to protect against damage or deterioration which could occur during movement and transportation, protection against physical damage due to excessive shock or vibration, protection against entry of dirt, water, or other contaminants, and protection against other environmental conditions such as temperature or humidity.

SHOULD – Denotes recommendation or expectation, compliance is expected.

SPECIFICATION – Refers to any design, fabrication or supply specification.

STORAGE – Holding of items in areas that address: the probable maximum period to be held, the inherent physical limitations of the item itself, and required protection from potential hazards such as fire, corrosion, chemical attack and environmental conditions. Storage also includes the requirements for maintaining the integrity and operability of items through routine maintenance, cleaning, or other means of preservation.

SUBSTITUTION – Any change or deviation from issued approved drawings, designs, methods, or contract terms and conditions. Changes in products, materials, equipment, methods of construction, and test criteria required by the Contract Documents proposed by the VENDOR after award of the Contract are considered to be requests for substitution.

VENDOR – The Company responsible for the supply of equipment or services.

WETTED – Within the context of this specification, "wetted" shall refer to any parts or surfaces designed to come in contact with waste process fluid (in liquid or vapor form) during normal operations.

WITNESS POINT – An inspection activity beyond which work shall not proceed until an inspector and/or BUYER is notified and (1) the inspection is performed and released, or (2) the inspection is deferred and can be completed at a later time, or (3) a written waiver is issued by the organization who established the witness point.

1 SCOPE

This specification applies to the Cross Flow Filtration System main process equipment required for the Low Activity Waste Pretreatment System (LAWPS) project. This specification provides requirements for the design, fabrication, examination, testing, packaging, lifting, and shipping as identified in the following sections and associated data sheets and drawings.

The process equipment supply includes the following items with associated instruments:

A. The Filter Feed Tank (FFT) – Shown in Red in Figure 1-1: Equipment Supplied.
   - Design and Fabrication in accordance with Design Proposal Drawings (DPDs), data sheets and this Specification (Section 3.6.13)

B. The Double Shell Tank (DST) Return Pump and the Filter Feed Pump – Shown in yellow in Figure 1-1: Equipment Supplied.
   - Design and Fabrication in accordance with DPDs, data sheets and this Specification (Section 3.6.12).
   - Lifting Devices for Pump Assemblies

C. Jumper Assemblies- Shown in Green in Figure 1-1: Equipment Supplied and also part of Cross Flow Filter (CFF) Module as shown in Figure 3-2: Jumpers and Interface Connections.
   - Design and Fabrication in accordance with DPDs, data sheets and this Specification (Section 3.6.19).
   - Equipment internal to the Jumper assembly such as pipe, supports, and instruments shall be in accordance with this specification.

D. The Cross Flow Filtration Module – Shown in blue on Figure 1-1: Equipment Supplied.
   Technical requirement for these items shall be identified in this specification and noted data sheets and DPDs. Figure 3-1 through Figure 3-13 provide overviews of associated equipment that are part of the CFF module.
   - Cross Flow Filter Skid
   - Valve Skid
   - Pipe-in-Pipe Heat Exchanger Assembly
   - Associated Piping
   - Associated Structural Supports
   - Associated Lifting Devices and Tools

E. Individual components not part of skid design or modules but included as part of the specification are listed below and shown in Figure 1-1: Equipment Supplied.
   - CFF-LIT-108A
   - CFF-LIT-108B
   - CFF-TE-113 – Included for information only

F. Individual components that will be provided to the VENDOR by the BUYER for installation into the Cross Flow Filtration Module.
   - 202LP-CFA-CFF-PIT-129 Hold – Backpulse system

• 202LP-CFA-UT-VLR-128	
• 202LP-CFA-CFF-VLR-129	
• 202LP-CFA-CFF-XV-139	
• 202LP-CFA-CFF-XV-140	
• 202LP-CFA-CFF-XV-141	Hold – Backpulse system
• 202LP-CFA-CFF-XV-142	Hold – Backpulse system
• 202LP-CFA-CFF-XV-145	Hold – Backpulse system
• 202LP-CFA-CFF-XV-150	Hold – Backpulse system
• 202LP-CFA-CFF-XV-151	Hold – Backpulse system
• 202LP-CFA-CFF-XV-166	
• 202LP-CFA-CFF-XV-167	Hold – Backpulse system
• 202LP-CFA-CFF-XV-169	
• 202LP-CFA-CFF-XV-174	Hold – Backpulse system
• 202LP-CFA-CFF-XV-180	
• 202LP-CFA-CFF-XV-181	
• 202LP-CFA-CFF-XV-182	
• 202LP-FFA-CFF-PV-101	
• 202LP-CFA-CFF-FV-136	
• 202LP-CFA-CFF-FV-183	

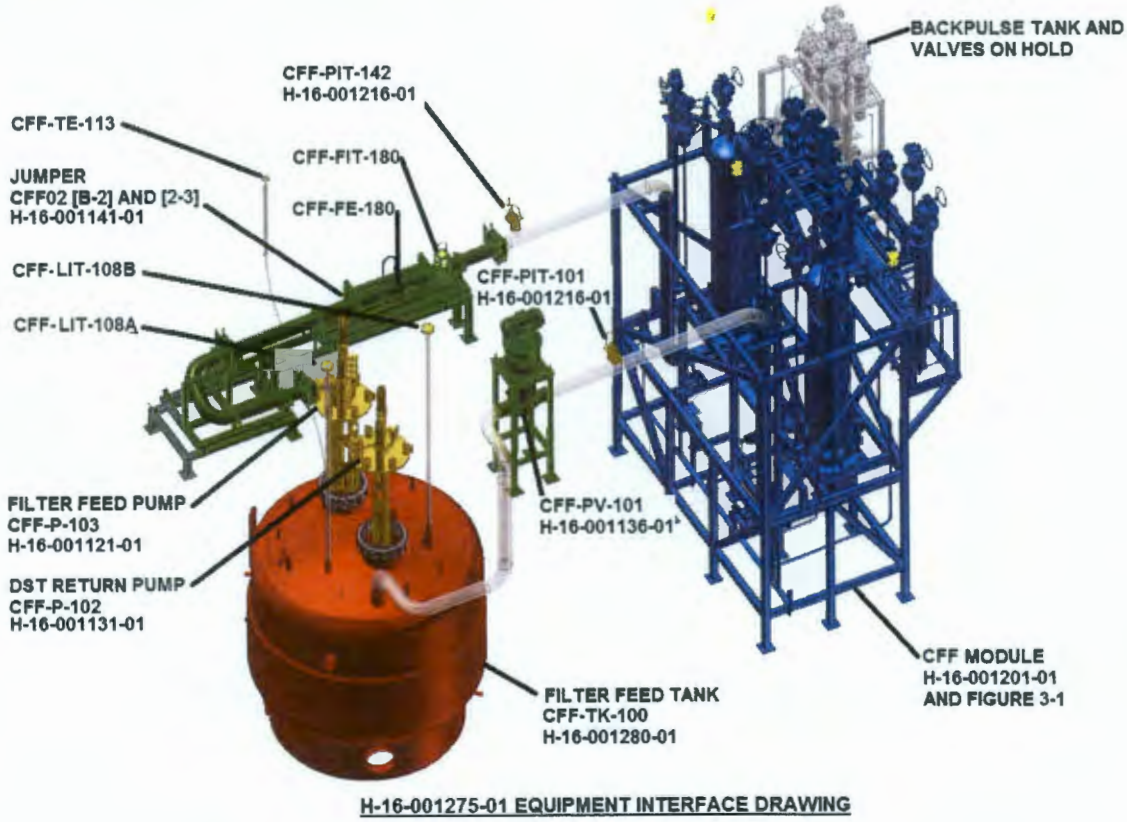

Figure 1-1: Equipment Supplied

NOTE: Figures 1-1 is for general information and may not be completely reflective of the current design concept. All detailed design activities shall be based on the latest released interface drawings, DPDs and datasheets.

The scope of the services identified in this specification encompasses Safety Significant (Full Quality and Enhanced Quality Assurance) items. The Quality Level of each item is determined by the Datasheets and the DPDs.

The BUYER shall be advised immediately in writing of any conflicts as soon as they are identified. No substitutes or deviations to this specification will be allowed without written approval from BUYER.

2 APPLICABLE DOCUMENTS

Work shall be performed in accordance with the referenced codes, standards, and documents for this specification. The following codes and standards, of the exact issue shown, form part of the BUYER basis of design to the extent specified in the applicable sections of this document. In the event of a conflict between documents referenced herein and the requirements of this specification, the requirements of this specification shall take precedence only when this specification's requirements are more stringent or conservative.

If a code or standard not listed below is to be applied to the scope (see Section 1.0), apply the latest code or standard as of April 16, 2015.

2.1 Government Documents

DOE O 414.1D, 2011	Quality Assurance
DOE-RL-92-36, Release 80, 2016	Hanford Site Hoisting and Rigging Manual
WAC 173-303-810	General Permit Conditions
WAC 173-303-640	Tank Systems

2.2 Non-Government Documents

AISC 348, 2009	Specification for Structural Joints Using High-Strength Bolt
AISC 360, 2010	Specification for Structural Steel Buildings
AISC N690, 2012	Specification for Safety-Related Steel Structures for Nuclear Facilities
ANSI/ANS 2.26, 2004	Categorization of Nuclear Facility Structures, Systems, and Components for Seismic Design
ANSI/HI 11.6, 2012	Rotodynamic Submersible Pumps: for Hydraulic Performance, Hydrostatic Pressure, Mechanical and Electrical Acceptance Tests
ANSI/HI 14.6, 2011	Rotodynamic Pumps for Hydraulic Performance Acceptance Tests
API 578, 2010	Material Verification Program for New and Existing Alloy Piping Systems, Second Edition
API 598, 2009	Valve Inspection and Testing
API 610, 2011	Centrifugal Pumps for Petroleum, Petrochemical and Natural Gas Industries
API 685, 2011	Sealless Centrifugal Pumps for Petroleum, Petrochemical and Gas Industry Process Services
ASCE 4-98, 2000	Seismic Analysis of Safety-Related Nuclear Structures
ASCE 7-10, 2010	Minimum Design Loads for Buildings and other Structures (3RD printing)
ASCE 43-05, 2005	Seismic Design Criteria for Structures, Systems, and Components in Nuclear Facilities
ASME A13.1, 2007	Scheme for Identification of Piping systems
ASME BPVC- Section II, 2013	Materials, Parts A through D

ASME BPVC- Section V, 2013	Nondestructive Examination
ASME BPVC-VIII, 2013 Edition	Rules for Construction of Pressure Vessels, Division 1 or 2
ASME BPVC Section IX, 2013 Edition	Welding, Brazing, and Fusing Qualifications
ASME BTH-1, 2014	Design of Below-the-Hook Lifting Devices
ASME B1.20.1, 2013	Pipe Threads, General Purpose (Inch)
ASME B16.5, 2013	Pipe Flanges and Flanged Fittings
ASME B16.9, 2012	Factory – Made Wrought Buttwelding Fittings
ASME B16.25, 2012	Buttwelding Ends
ASME B16.34, 2013	Valves-Flanged, Threaded and Welding End
ASME B18.2.1, 2012	Square, Hex, Heavy Hex, and Askew Head Bolts and Hex, Heavy Hex, Hex Flange, Lobed Head, and Lag Screws (Inch Series)
ASME B18.2.2, 2010	Nuts for General Applications: Machine Screw Nuts, Hex, Square, Hex Flange, and Coupling Nuts (Inch Series)
ASME B30.20, 2013	Below-the-Hook Lifting Devices
ASME B31.3, 2012	Process Piping
ASME B36.19M, 2004	Stainless Steel Pipe
ASME B46.1, 2009	Surface Texture (Surface Roughness, Waviness, and Lay)
ASME NQA-1, 2008 and 2009A	Quality Assurance Program Requirements for Nuclear Facility Applications
ASME QME-1, 2012	Qualification of Active Mechanical Equipment Used in Nuclear Facilities
ASNT SNT-TC-1A, 2011	Recommended Practice for Personnel Qualification and Certification in Nondestructive Testing
ASTM A182/A182M, 2014	Standard Specification for Forged or Rolled Alloy and Stainless Steel Pipe Flanges, Forged Fittings, and Valves and Parts for High-Temperature Service
ASTM A193/A193M, 2014	Standard Specification for Alloy-Steel and Stainless Steel Bolting for High Temperature or High Pressure Service and Other Special Purpose Applications
ASTM A194/A194M, 2014	Standard Specification for Carbon and Alloy Steel Nuts for Bolts for High Pressure or High Temperature Service, or Both

ASTM A240/A240M, 2015	Standard Specification for Chromium and Chromium-Nickel Stainless Steel Plate, Sheet, and Strip for Pressure Vessels and for General Applications
ASTM A262, 2015	Standard Practices for Detecting Susceptibility to Intergranular Attack in Austenitic Stainless Steels
ASTM A276, 2015	Standard Specification for Stainless Steel Bars and Shapes
ASTM A312/A312M, 2015	Standard Specification for Seamless, Welded, and Heavily Cold Worked Austenitic Stainless Steel Pipes
ASTM A370, 2014	Standard Test Methods and Definitions for Mechanical Testing of Steel Products
ASTM A380, 2013	Standard Practice for Cleaning, Descaling, and Passivation of Stainless Steel Parts, Equipment, and Systems
ASTM A403, 2014	Standard Specification for Wrought Austenitic Stainless Steel Pipe Fittings
ASTM A480, 2014	Standard Specification for General Requirements for Flat-Rolled Stainless and Heat- Resisting Steel Plate, Sheet, and Strip
ASTM A554, 2015	Standard Specification for Welded Stainless Steel Mechanical Tubing
ASTM A733, 2013	Standard Specification for Welded and Seamless Carbon Steel and Austenitic Stainless Steel Pipe Nipples
ASTM D4329, 2013	Standard Practice for Fluorescent Ultraviolet (UV) Lamp Apparatus Exposure of Plastics
ASTM E128, 1999	Standard Test Method for Maximum Pore Diameter and Permeability of Rigid Porous Filters for Laboratory Use
ASTM F436, 2011	Standard Specification for Hardened Steel Washers
AWS A2.4, 2012	Standard Symbols for Welding, Brazing, and Nondestructive Examination
AWS A4.2, 2006	Standard Procedures for Calibrating Magnetic Instruments to Measure the Delta Ferrite Content of Austenitic and Duplex Ferritic-Austenitic Stainless Steel Weld Metal

AWS A5.32, 2011	Welding Consumables – Gases and Gas Mixtures For Fusion Welding and Allied Processes
AWS D1.6/D1.6M, 2007	Structural Welding Code – Stainless Steel
AWS D14.1, 2005	Specification for Welding of Industrial and Mill Cranes and Other Material Handling Equipment
BNL-52361, 1993	Seismic Design and Evaluation Guidelines for the Department of Energy High-Level Waste Storage Tanks and Appurtenances
IBC, 2012	International Building Code
ICC-ES AC 156, 2010	Acceptance Criteria for Seismic Certification by Shake-Table Testing of Nonstructural Components
IEC 61508, 2010	Functional Safety of Electrical/Electronic/Programmable Electronic Safety-related Systems
IEEE 344, 2013	IEEE Standard for Seismic Qualification of Equipment for Nuclear Power Generating Stations
MSS SP-25, 2013	Standard Marking System for Valves, Fittings, Flanges, and Unions
MSS SP-55, 2011	Quality Standard for Steel Castings for Valve, Fittings, Flanges, and Unions
MSS SP-58, 2009	Pipe Hangers and Supports – Materials, Design, Manufacture, Selection, Application, and Installation
MSS SP-97, 2012	Integrally Reinforced Forged Branch Outlet Fittings – Socket Welding, Threaded, and Buttwelding Ends
NBBI NB-23, 2015	National Board Inspection Code
NEMA ICS 6, 1993	Enclosures
NEMA MG-1, 2014	Motors and Generators
NFPA 70, 2014	National Electric Code
PFI ES-3, 2009	Fabricating Tolerances
PFI ES-24, 2013	Pipe Bending Methods, Tolerances, Process and Material Requirements
TR-017218-R1, 1999	Guideline for Sampling in the Commercial-Grade Item Acceptance Process
WRC 297, 1984	Local Stresses in Spherical & Cylindrical Shells due to External Loadings on Nozzles

WRC 537, 2010	Precision Equations and Enhanced Diagrams for Local Stresses in Spherical & Cylindrical Shells due to External Loadings for Implementation

2.3 Other Documents

• TFC-BSM-IRM_DC-C-07, Rev A-5	VENDOR Processes
• TFC-ENG-STD-22, Rev F, 2014	Piping, Jumpers, and Valves
• TFC-ESHQ-Q_C-C-03, Rev C-13	Suspect/Counterfeit Items (SCI)
• RPP-14541, Rev 7	Jumper Fabrication and Testing Specification for Tank Farms
• Form A-6002-544	Critical characteristics for CGI
• Form A-6003-417	Requests for Information (RFI)
• Form A-6005-315	Transmittal Letter

3 REQUIREMENTS

3.1 Cross Flow Filter System Functional Requirements

The cross flow filter system performs the following functions:

A. Receive waste into the Filter Feed Tank from the double shell tanks.
B. Returns waste to the double shell tanks via the DST Return Pump.
C. Send waste through the Cross Flow Filters via the Filter Feed Pump.
D. Control temperature in Filter Feed Tank via a cooling jacket.
E. Control temperature of Filtered Waste (permeate) via the Permeate Heat Exchanger.
F. Send Filtered Waste (permeate) to the Ion Exchange (IX) System.
G. Provide instrument and valves as required to control the previous processes.

Functional testing of the filter feed system shall be in accordance with Section 4.6.3.

3.2 Cross Flow Filter Functional Requirements

The equipment shall meet the following functional requirements:

A. The operating functions of the CFF are: separate solids, filter chemical cleaning, and back pulsing.

B. The filter system shall be capable of filtering nuclear process fluid with the requirements provided in Table 3-5 Physical Characteristics and in accordance with the data sheet

C. The filter assembly shall be designed as a remotely removable cartridge assembly as shown in Figure 3-8: CFF Cartridge Assembly.

D. Any special equipment or tools necessary to operate or maintain the CFF Cartridge Assembly (including a Below the Hook lifting device for the filter cartridge) shall be included. Instructions and diagrams shall be included describing the operation of the equipment or tool.

E. The filter cartridge will include a special flange detail to allow remote placement of the filter element cartridge, see Figure 3-9: CFF Cartridge Mounting Plate O-Rings and Figure 3-10: CFF Cartridge to Base O-Ring Seal.

F. The cartridge main seal shall be remotely testable to confirm flange sealing.

G. Each CFF assembly shall permit the permeate to drain readily from the area outside the tubes (shell side). Pockets or voids that could retain the process fluid shall be minimized. A siphon drain as shown on Figure 3-11: CFF Cartridge Drainage is acceptable.

H. The metal powder used to manufacture the porous tubes shall be new. Material shall be 316L stainless steel. All porous tubes shall have an average pore size of 0.1 micron (nominal) determined via bubble point testing per ASTM E 128, Standard Test Method for Maximum Pore Diameter and Permeability of Rigid Porous Filters for Laboratory Use. Scaled integrated testing shall confirm final filter size and configuration.

3.3 Cross Flow Filter Technical Requirements

The technical requirements for the Cross Flow Filtration main process equipment shall be noted as follows:

A. The CFF design shall include the following items in accordance with BUYER's DPDs, See Figure 3-1: Cross Flow Filter Module, Figure 3-2: Jumpers and Interface Connections, and Figure 3-3: Equipment Identification:
   - Two CFFs with interconnecting piping and services
   - Valve Skid with interconnecting piping and services
   - Heat Exchanger Skid with interconnection piping and services
   - Pipe routing and interface points for piping connections
   - Module framework with interface locations and methods for mounting

B. The filter elements shall be supported inside the filter cartridge. Each support plate shall provide support for all elements at end support locations. Support plates shall be located over solid tube sections, not porous. Holes through the support plates carrying the elements shall be chamfered and de-burred.

C. The primary boundary and internals shall be designed for a minimum operating life of 40 years based on normal expected chemical conditions, wear and tear, with no planned routine maintenance during that period.

D. The CFFs will be operated by the BUYER in a radioactive vault. At the end of life the filter cartridge will be remotely disconnected from the loop, removed from the

vault, and handled remotely to disposal packaging utilizing an overhead crane with Closed Circuit Television (CCTV) camera assist.

E. Each CFF assembly housing shall be designed, fabricated and tested as specified in Section 3.6.13; ASME Process Vessels Fabrication (CFF,FFT, and Backpulse Tank).

F. The filter tube to shell seals shall be pressure tested to confirm seal integrity. VENDOR shall supply new seals if any dismantling is necessary during testing or shipping.

G. The integrity of the filter tubes to shell welds shall be pressure tested by pressure testing the shell side of the tube bundle.

H. All powders used in the sintering process of tube fabrication shall be documented by lot for their chemical composition with powder fraction certified.

I. Tubes shall be tested for strength at the rate of 1% per batch sintered. VENDOR to submit test data.

J.All tubes shall be bubble point tested per ASTM E128.

K. VENDOR shall perform the following filter tube inspections

- Visually Inspect 100% of tube external surface for defects.
- Visually Inspect 100% of tubes internal surface for defects using a borescope with closed circuit camera.
- Element Production Welding
- Element Bubble point Testing
- Inspect all welds inside the filter elements including the porous to solid connector welds using a borescope with closed circuit camera.
- Tensile test 1% of porous welds to destruction and record data.
- Tube welds that are rejected shall have the entire tube discarded and replace with a new tube.
- The welds between the tube elements and the cartridge base plate and upper plate shall be liquid penetrant tested at final assembly
- VENDOR to submit the procedure for liquid filtration in the filter media, in stainless steel and provide results from bubble point test data.

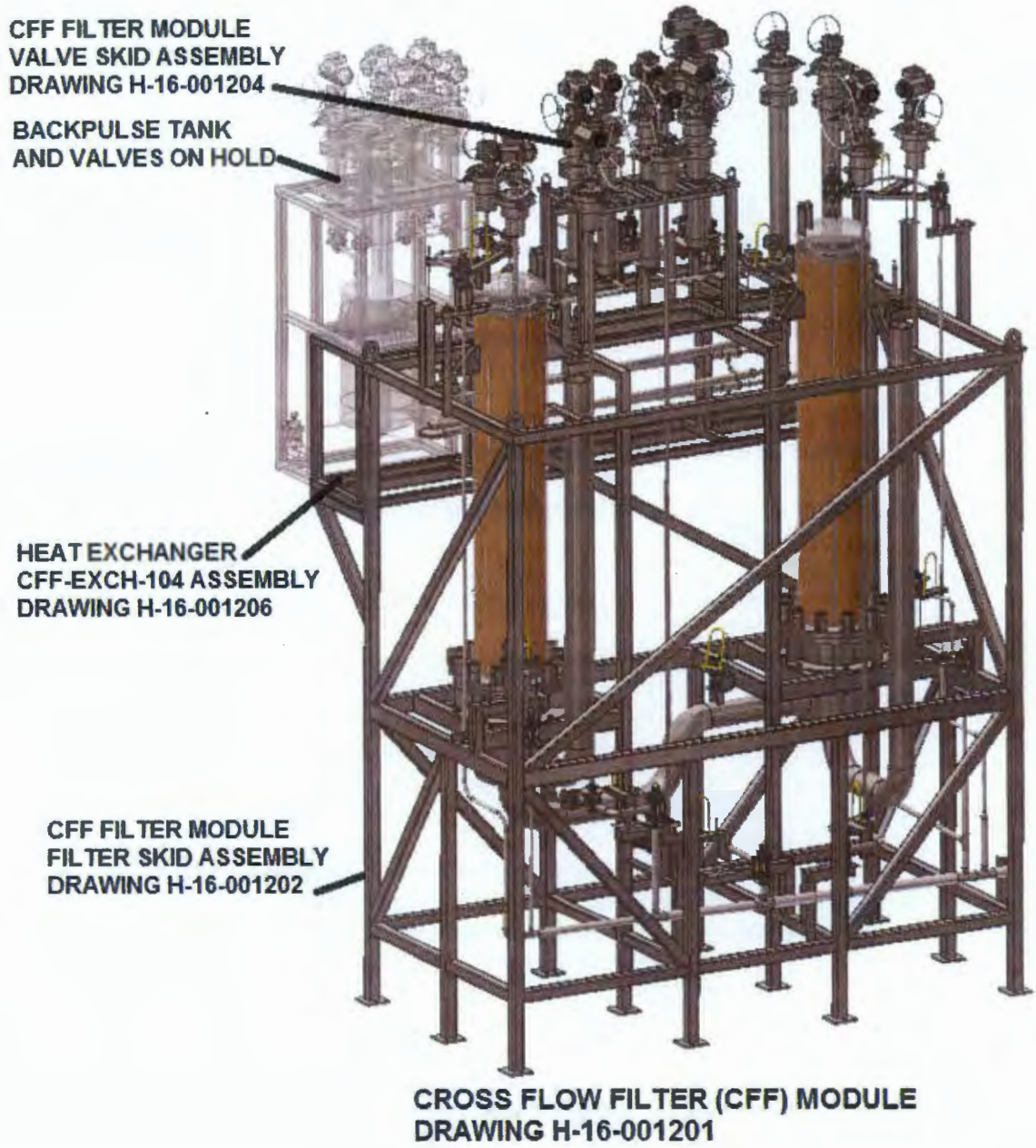

Figure 3-1: Cross Flow Filter Module

NOTE: Figures 3-1 through 3-13 are for general information and may not be reflective of the current design concept. All detailed design activities shall be based on the latest released DPDs and datasheets.

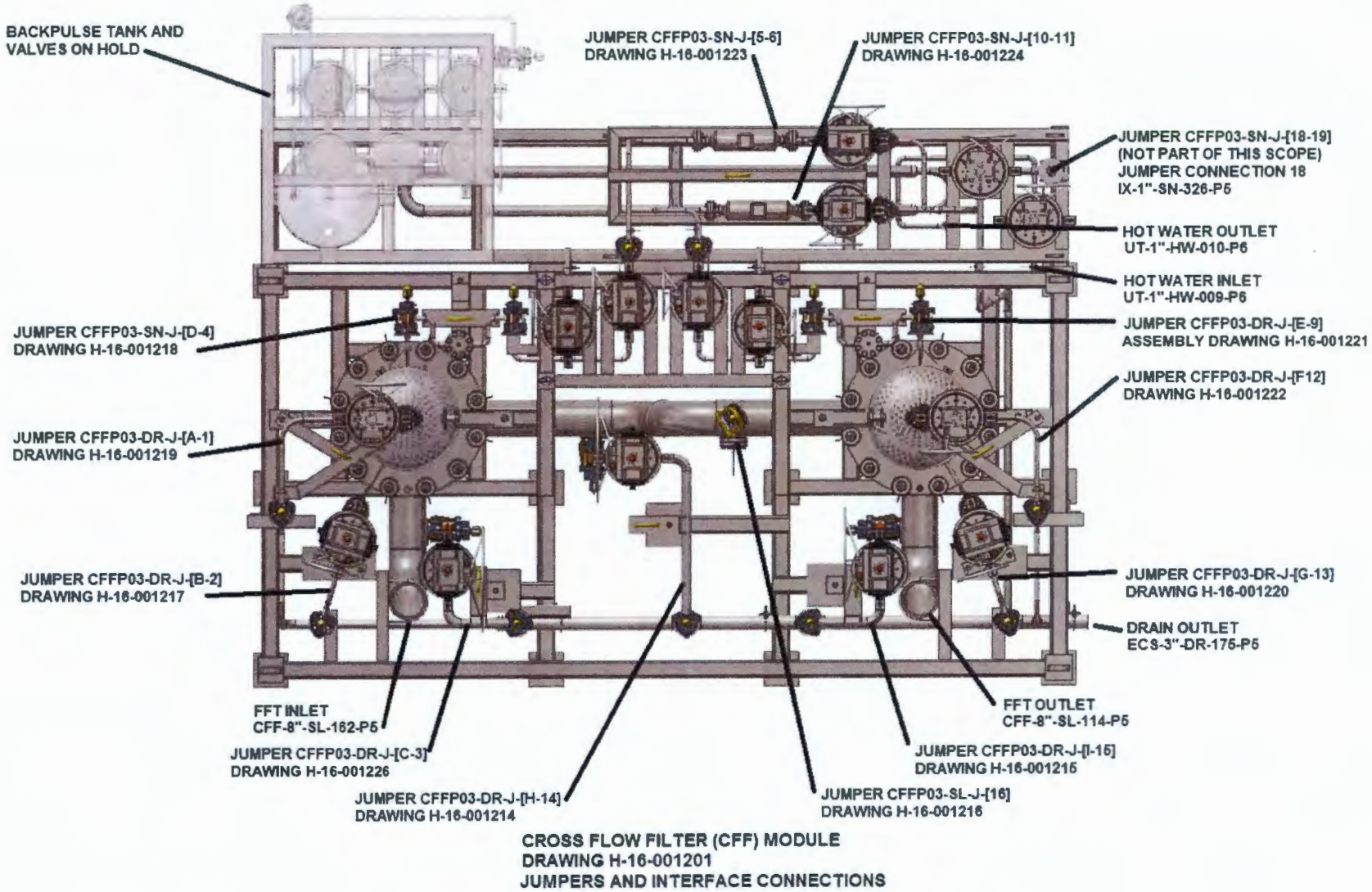

Figure 3-2: Jumpers and Interface Connections

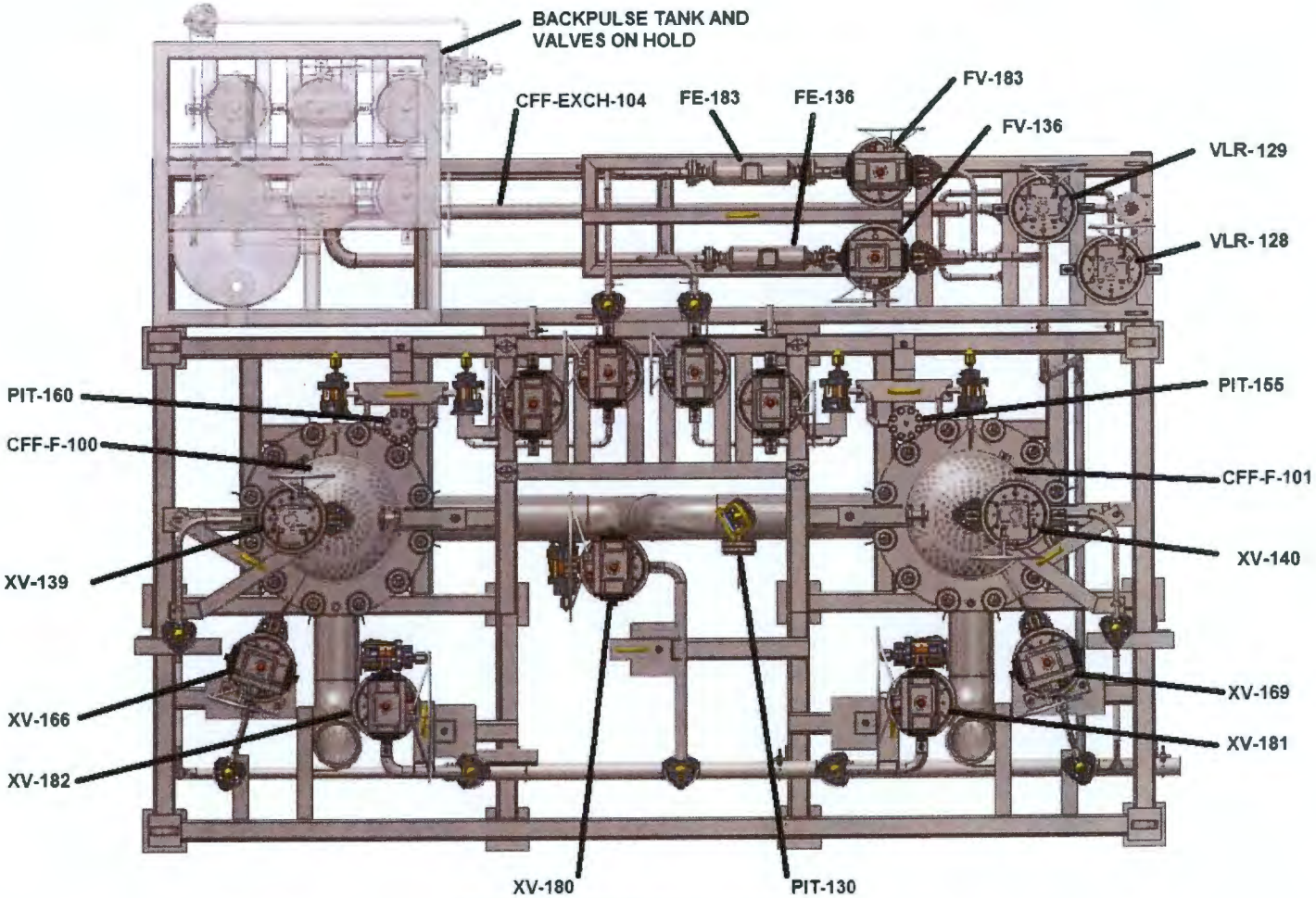

CROSS FLOW FILTER (CFF) MODULE
DRAWING H-16-001201
EQUIPMENT IDENTIFICATION NUMBERS
PREFIX ALL NUMBERS WITH "202LP-CFA-CFF"

Figure 3-3: Equipment Identification

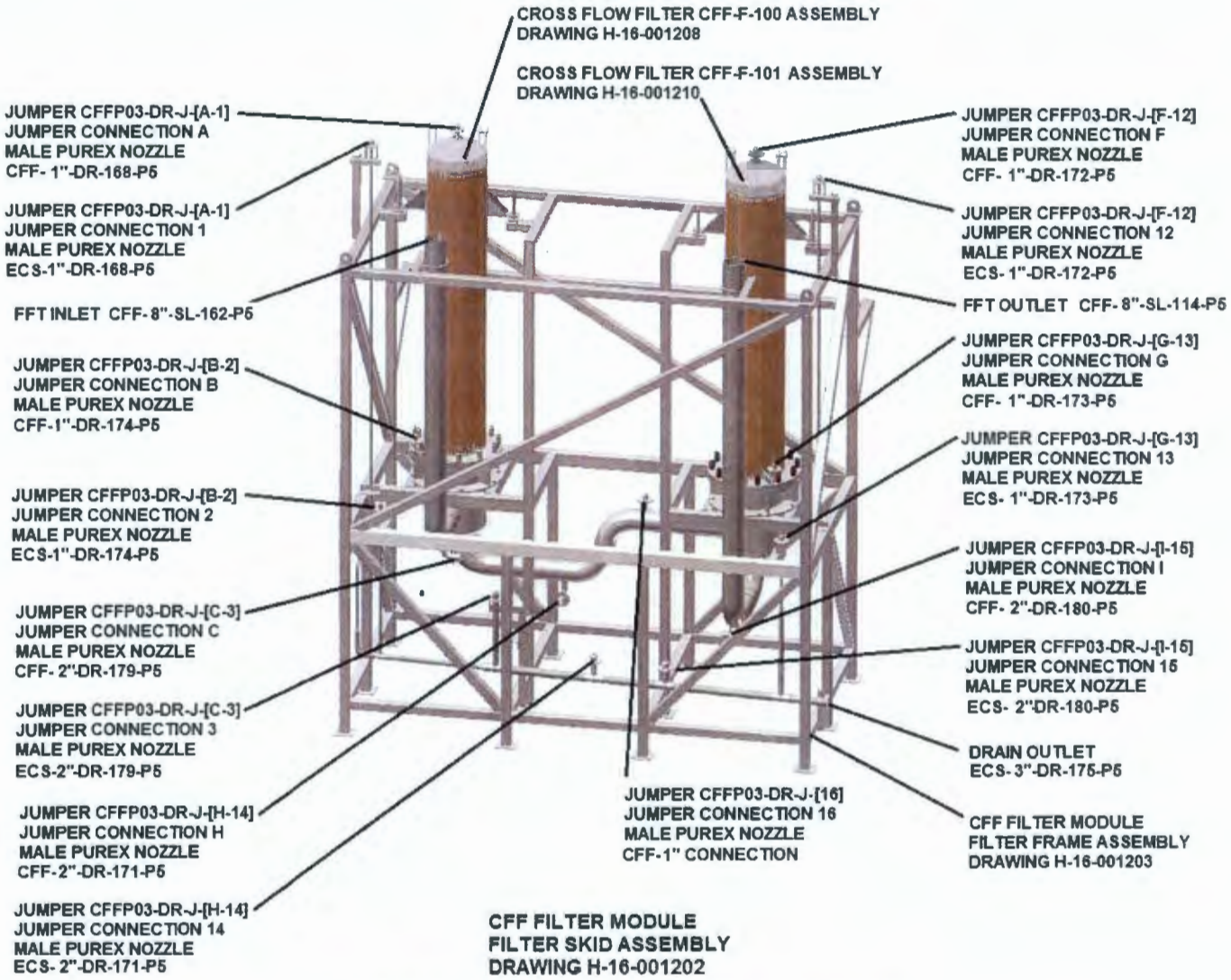

Figure 3-4: CFF Filter Module Filter Skid Assembly

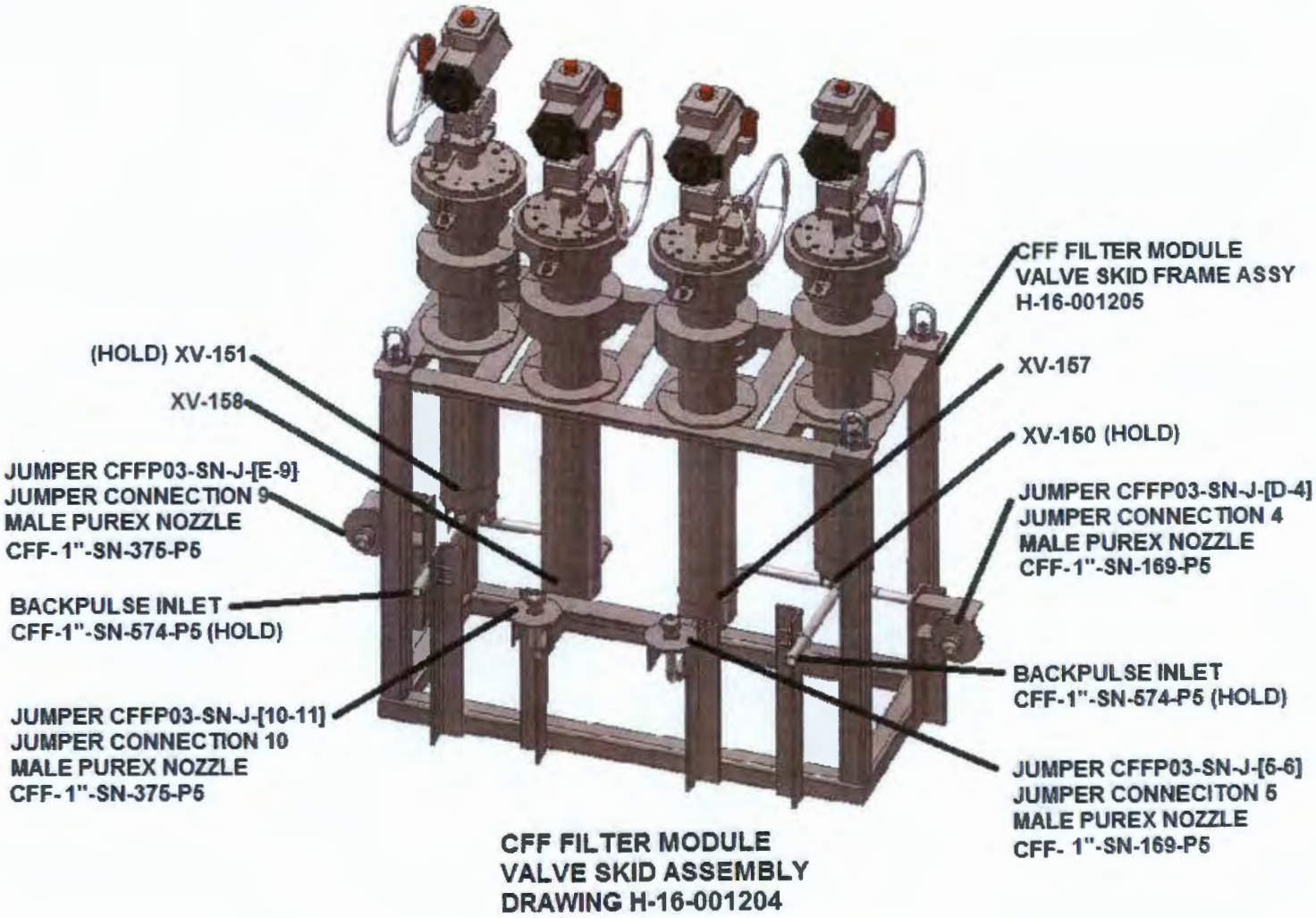

Figure 3-5: CFF Filter Valve Skid Assembly

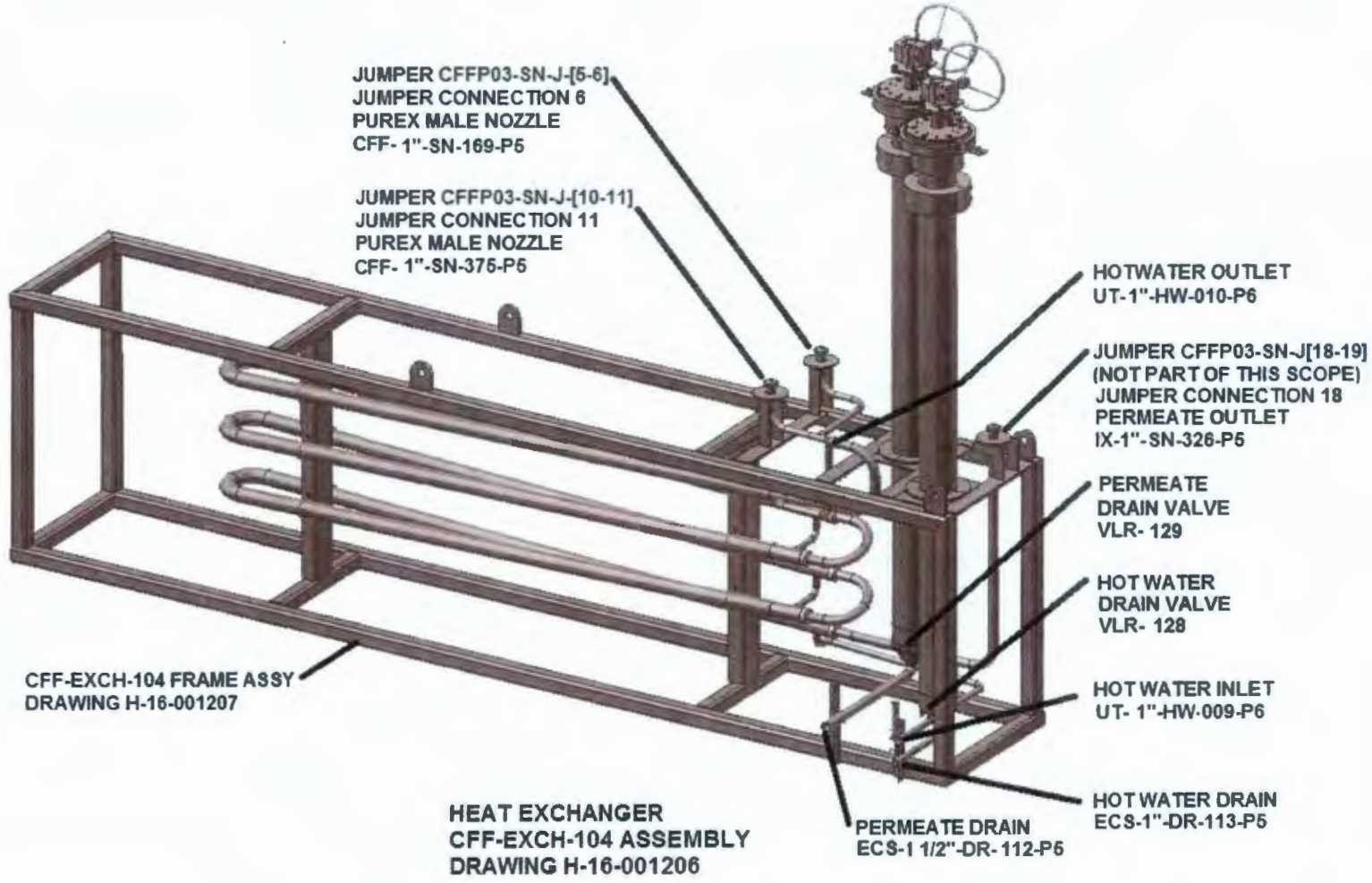

Figure 3-6: Heat Exchanger CFF-EXH-104 Assembly

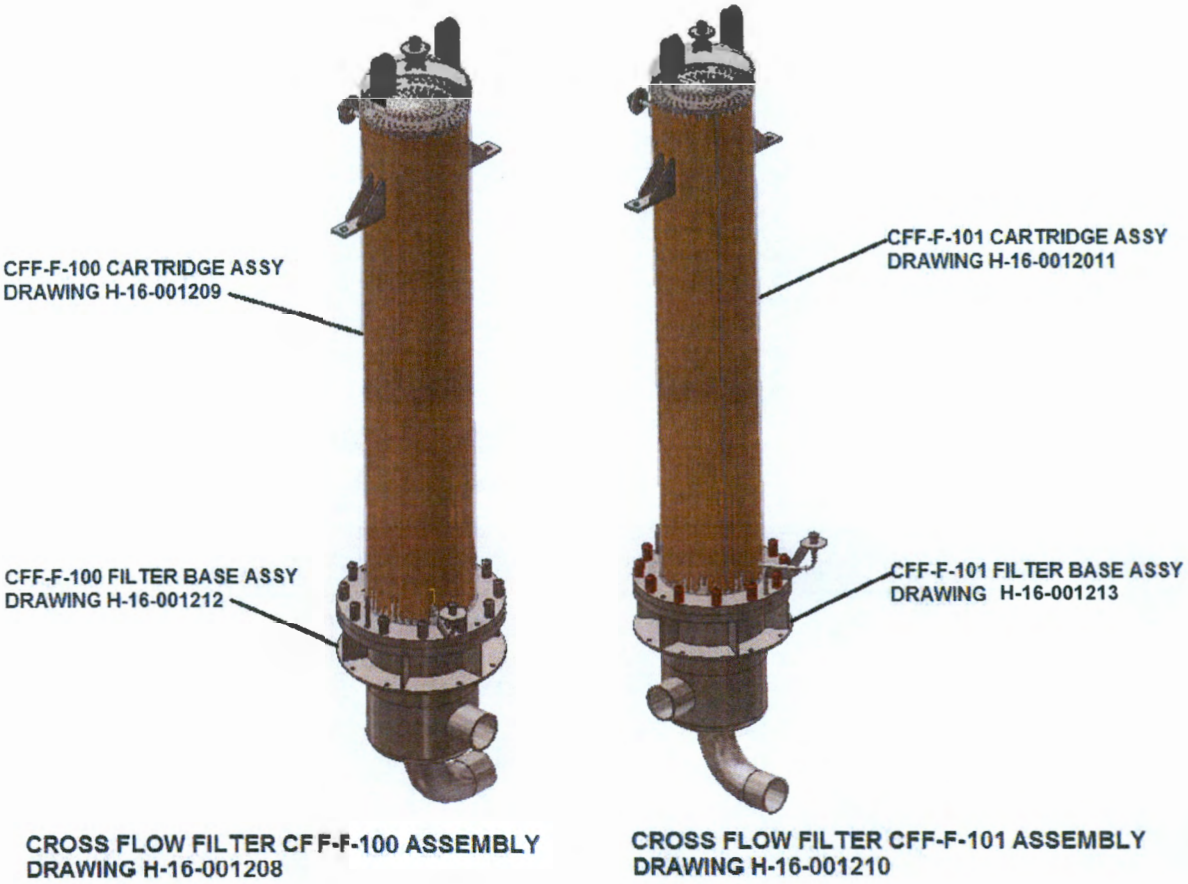

Figure 3-7: Cross Flow Filter Assembly

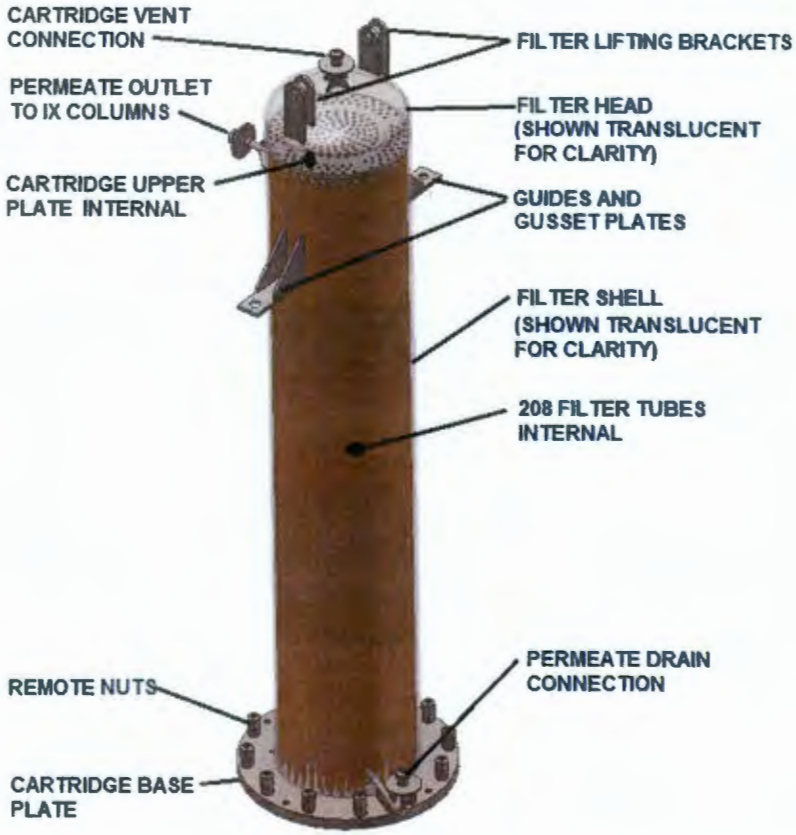

Figure 3-8: CFF Cartridge Assembly

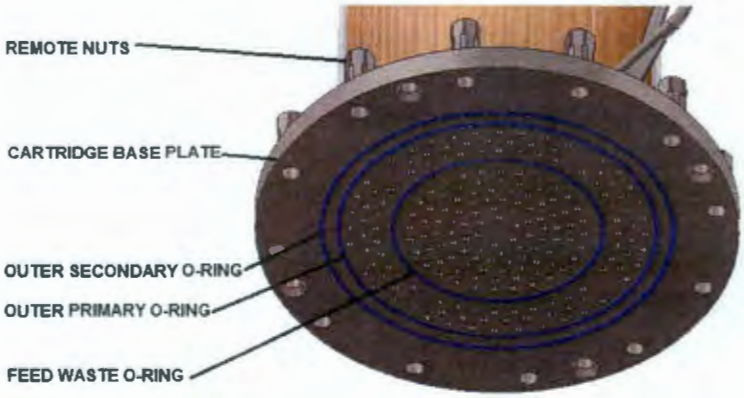

Figure 3-9: CFF Cartridge Mounting Plate O-Rings

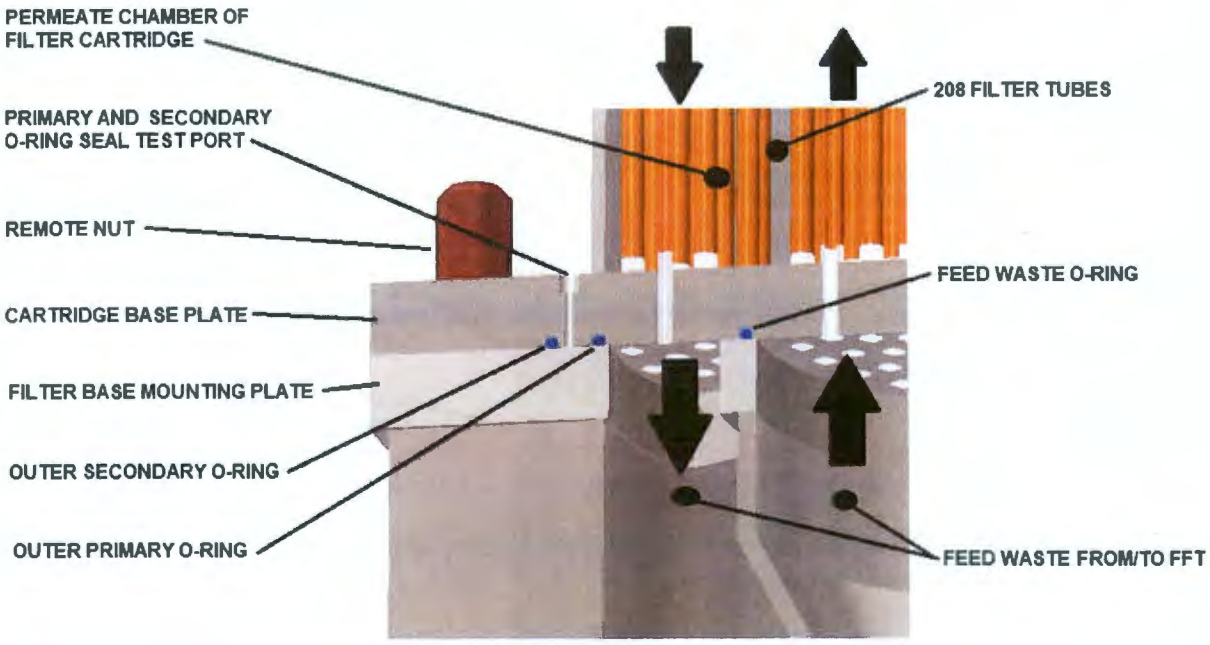

Figure 3-10: CFF Cartridge to Base O-Ring Seal

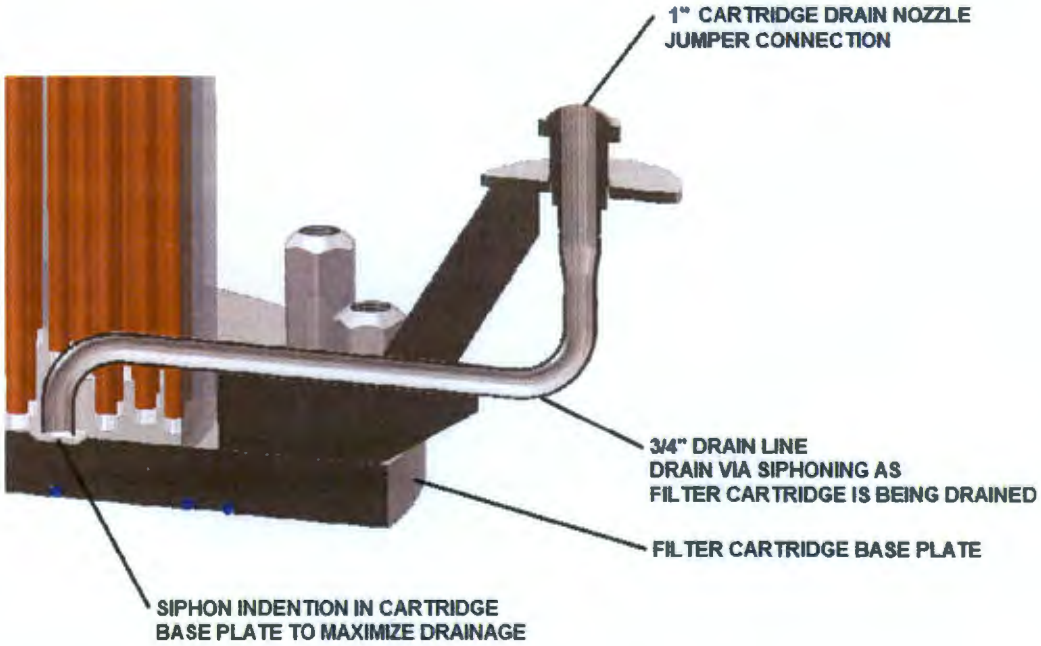

Figure 3-11: CFF Cartridge Drainage

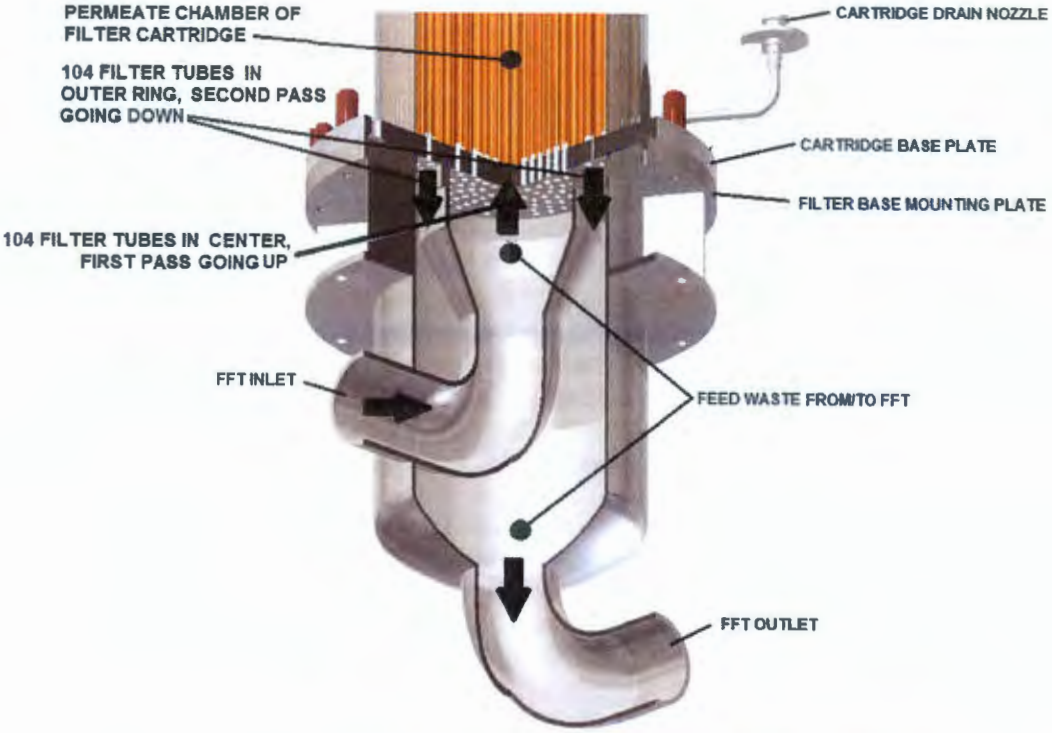

Figure 3-12: CFF Cartridge to Filter Base Connection

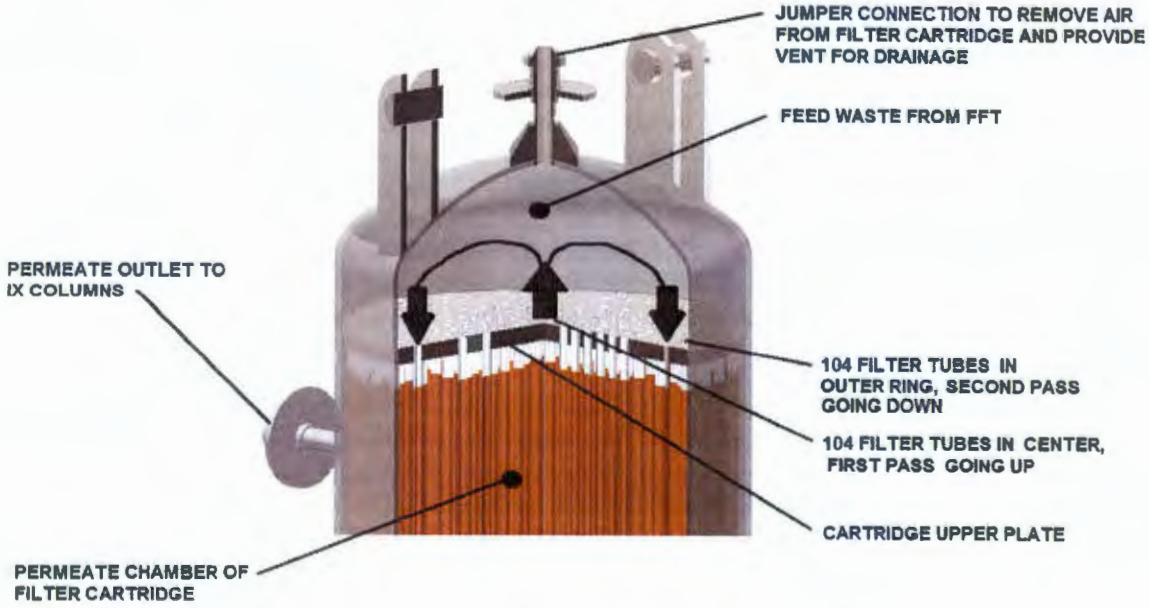

Figure 3-13: CFF Cartridge Filter Head Flow

3.4 Item Definition

The following is a list of all drawings and data sheets associated with this specification:

INTERFACE DRAWINGS AND DATA SHEETS:

H-16-001275 Sh 1	LAWPS CFF and FFT Pit/Vault LLP Equipment Interface
H-16-001275 Sh 2	LAWPS CFF and FFT Pit/Vault LLP Equipment Interface
H-16-001275 Sh 3	LAWPS CFF and FFT Pit/Vault LLP Equipment Interface
H-16-001275 Sh 4	LAWPS CFF and FFT Pit/Vault LLP Equipment Interface
H-16-001900 Sh 1	Remote Valve Sleeved Assembly DPD - (BUYER supplied)
H-16-001900 Sh 2	Remote Valve Sleeved Assembly DPD - (BUYER supplied)
H-16-001901 Sh 1	Remote Valve Shaft Assembly DPD - (BUYER supplied)
H-16-001902 Sh 1	202LP-CFA-CFF-PV-101 Valve DPD - (BUYER supplied)
H-16-001903 Sh 1	Remote PIT Sleeved Assembly - (BUYER supplied)

202LP-CFA-CFF-PIT-129	TK 101 Pressure - (BUYER supplied)
202LP-CFA-UT-VLR-128	CFF Hot Water Valve - (BUYER supplied)
202LP-CFA-CFF-VLR-129	CFF Permeate Valve - (BUYER supplied)
202LP-CFA-CFF-XV-139	CFF Vent Valve - (BUYER supplied)
202LP-CFA-CFF-XV-140	CFF Drain Valve - (BUYER supplied)
202LP-CFA-CFF-XV-141	TK 101 Plant Air Supply Valve - (BUYER supplied)
202LP-CFA-CFF-XV-142	TK 101 Plant Air Supply Valve - (BUYER supplied)
202LP-CFA-CFF-XV-145	TK 101 Plant Air Bypass Valve - (BUYER supplied)
202LP-CFA-CFF-XV-150	CFF-100 Back Pulse Valve - (BUYER supplied)
202LP-CFA-CFF-XV-151	CFF-101 Back Pulse Valve - (BUYER supplied)
202LP-CFA-CFF-XV-166	CFF-100 Permeate Drain Valve - (BUYER supplied)
202LP-CFA-CFF-XV-167	TK 101 Exhausts to Cs TK Valve - (BUYER supplied)
202LP-CFA-CFF-XV-169	CFF-101 Permeate Drain Valve - (BUYER supplied)
202LP-CFA-CFF-XV-174	TK 101 Exhaust to HVAC System Valve - (BUYER supplied)
202LP-CFA-CFF-XV-180	CFF-100 Feed Drain Valve - (BUYER supplied)
202LP-CFA-CFF-XV-181	CFF-101 Feed Drain Valve - (BUYER supplied)
202LP-CFA-CFF-XV-182	FFT to CFF Line Drain Valve - (BUYER supplied)
202LP-FFA-CFF-PV-101	CFF Return to FFT Pressure Control - (BUYER supplied)
202LP-CFA-CFF-FV-136	CFF 101 Permeate to IXC 200 Flow - (BUYER supplied)
202LP-CFA-CFF-FV-183	CFF 100 Permeate to IXC 200 Flow - (BUYER supplied)

CFF MODULE DRAWINGS:

H-16-001201 Sh 1	LAWPS CFF Filter Module CFF-P-03 Assembly DPD
H-16-001201 Sh 2	LAWPS CFF Filter Module CFF-P-03 Assembly DPD
H-16-001202 Sh 1	LAWPS CFF Filter Module CFF-P-03 Filter Skid Assembly DPD
H-16-001202 Sh 2	LAWPS CFF Filter Module CFF-P-03 Filter Skid Assembly DPD
H-16-001202 Sh 3	LAWPS CFF Filter Module CFF-P-03 Filter Skid Assembly DPD
H-16-001203 Sh 1	LAWPS CFF Filter Module CFF-P-03 Filter Frame Assembly DPD
H-16-001203 Sh 2	LAWPS CFF Filter Module CFF-P-03 Filter Frame Assembly DPD
H-16-001203 Sh 3	LAWPS CFF Filter Module CFF-P-03 Filter Frame Assembly DPD
H-16-001204 Sh 1	LAWPS CFF Filter Module CFF-P-03 Valve Skid Assembly DPD
H-16-001205 Sh 1	LAWPS CFF Filter Module CFF-P-03 Valve Skid Frame Assy DPD
H-16-001206 Sh 1	LAWPS CFF Filter Module CFF-P-03 CFF-EXH-104 Assembly DPD

H-16-001206 Sh 2	LAWPS CFF Filter Module CFF-P-03 CFF-EXH-104 Assembly DPD
H-16-001206 Sh 3	LAWPS CFF Filter Module CFF-P-03 CFF-EXH-104 Assembly DPD
H-16-001207 Sh 1	LAWPS CFF Filter Module CFF-P-03 CFF-EXH-104 Frame Assy DPD
H-16-001208 Sh 1	LAWPS CFF Filter Module CFF-P-03 CFF-F-100 Assembly DPD
H-16-001209 Sh 1	LAWPS CFF Filter Module CFF-P-03 CFF-F-100 Cartridge Assy DPD
H-16-001210 Sh 1	LAWPS CFF Filter Module CFF-P-03 CFF-F-101 Assembly DPD
H-16-001211 Sh 1	LAWPS CFF Filter Module CFF-P-03 CFF-F-101 Cartridge Assy DPD
H-16-001211 Sh 2	LAWPS CFF Filter Module CFF-P-03 CFF-F-101 Cartridge Assy DPD
H-16-001211 Sh 3	LAWPS CFF Filter Module CFF-P-03 CFF-F-101 Cartridge Assy DPD
H-16-001212 Sh 1	LAWPS CFF Filter Module CFF-P-03 CFF-F-100 Filter Base DPD
H-16-001212 Sh 2	LAWPS CFF Filter Module CFF-P-03 CFF-F-100 Filter Base DPD
H-16-001213 Sh 1	LAWPS CFF Filter Module CFF-P-03 CFF-F-101 Filter Base DPD
H-16-001213 Sh 2	LAWPS CFF Filter Module CFF-P-03 CFF-F-101 Filter Base DPD
H-16-001924 Sh 1	LAWPS Remote Nut Sleeve Assembly
H-16-001924 Sh 2	LAWPS Remote Nut Sleeve Assembly
H-16-001925 Sh 1	LAWPS Jumper Nozzle Connection 2" PUREX Kickoff Assembly
H-16-001926 Sh 1	LAWPS Jumper Nozzle Connection 1" PUREX Kickoff Assembly
H-16-001928 Sh 1	LAWPS Jumper Lifting Bail Assembly

JUMPER DRAWINGS:

H-16-001141 Sh 1	LAWPS FFT Pump Pit CFF-P-02 Jumper [B-2] to [2-3] Assy DPD
H-16-001142 Sh 1	LAWPS FFT Pump Pit CFF-P-02 Jumper CFFP02-SL-J-[2-3] DPD
H-16-001143 Sh 1	LAWPS FFT Pump Pit CFF-P-02 Jumper CFFP02-SL-J-[B-2] DPD
H-16-001144 Sh 1	LAWPS Jumper [B-2] to [2-3] Frame Assembly DPD
H-16-001214 Sh 1	LAWPS CFF Module CFF-P-03 Jumper CFFP03-DR-J-[H-14] Assy
H-16-001215 Sh 1	LAWPS CFF Module CFF-P-03 Jumper CFFP03-DR-J-[I-15] Assy
H-16-001216 Sh 1	LAWPS CFF Module CFF-P-03 PIT Instrument Jumper Assy
H-16-001217 Sh 1	LAWPS CFF Module CFF-P-03 Jumper CFFP03-DR-J-[B-2] Assy
H-16-001218 Sh 1	LAWPS CFF Module CFF-P-03 Jumper CFFP03-SN-J-[D-4] Assy
H-16-001219 Sh 1	LAWPS CFF Module CFF-P-03 Jumper CFFP03-DR-J-[A-1] Assy
H-16-001220 Sh 1	LAWPS CFF Module CFF-P-03 Jumper CFFP03-DR-J-[G-13] Assy
H-16-001221 Sh 1	LAWPS CFF Module CFF-P-03 Jumper CFFP03-SN-J-[E-9] Assy
H-16-001222 Sh 1	LAWPS CFF Module CFF-P-03 Jumper CFFP03-DR-J-[F-12] Assy
H-16-001223 Sh 1	LAWPS CFF Module CFF-P-03 Jumper CFFP03-SN-J-[5-6] Assy
H-16-001224 Sh 1	LAWPS CFF Module CFF-P-03 Jumper CFFP03-SN-J-[10-11] Assy
H-16-001225 Sh 1	LAWPS CFF Module CFF-P-03 Jumper CFFP03-SN-J-[5-6,10-11] Assy
H-16-001226 Sh 1	LAWPS CFF Module CFF-P-03 Jumper CFFP03-DR-J-[C-3] Assy
H-16-001227 Sh 1	LAWPS CFF0P3-SN-J-[18-19] Jumper Assembly DPD

FILTER FEED TANK DRAWINGS:

H-16-001280 Sh 1	LAWPS Filter Tank Vault CFF-V-01 Tank CFF-TK-100 DPD
H-16-001280 Sh 2	LAWPS Filter Tank Vault CFF-V-01 Tank CFF-TK-100 DPD
H-16-001280 Sh 3	LAWPS Filter Tank Vault CFF-V-01 Tank CFF-TK-100 DPD
H-16-001280 Sh 4	LAWPS Filter Tank Vault CFF-V-01 Tank CFF-TK-100 DPD
H-16-001280 Sh 5	LAWPS Filter Tank Vault CFF-V-01 Tank CFF-TK-100 DPD
H-16-001280 Sh 6	LAWPS Filter Tank Vault CFF-V-01 Tank CFF-TK-100 DPD
H-16-001920 Sh 1	LAWPS Tank Thermowell Typical Detail

FILTER FEED DRAWINGS:

H-16-001121 Sh 1	LAWPS Filter Feed Pump CFF-P-103 Assembly DPD
H-16-001131 Sh 1	LAWPS DST Return Pump CFF-P-102 Assembly DPD
H-16-001136 Sh 1	LAWPS 202LP-CFA-CFF-PV-101 Support Assembly DPD
H-16-001137 Sh 1	LAWPS 202LP-CFA-CFF-PV-101 Frame Assembly DPD
H-16-001902 Sh 1	LAWPS 202LP-CFA-CFF-PV-101 Valve DPD
H-16-001908 Sh 1	LAWPS FIT/PIT Instrument Support Assy

CFF MODULE DATA SHEETS:

202LP-CFA-CFF-EXCH-104	Permeate Heat Exchanger
202LP-CFA-CFF-F-100/101	CFF Cross Flow Filters CFF-F-100/101

CFF JUMPER DATA SHEETS:

202LP-CFA-CFF-FE-136	CFF 101 Permeate to IXC 200 Flow
202LP-CFA-CFF-FE-183	CFF 100 Permeate to IXC 200 Flow
202LP-CFA-CFF-PIT-130	CFF-F-100 Feed Outlet Pressure
202LP-CFA-CFF-PIT-155	CFF 101 Permeate Pressure
202LP-CFA-CFF-PIT-160	CFF 100 Permeate Pressure

FILTER FEED TANK DATA SHEET

202LP-FFA-CFF-TK-100	Filter Feed Tank CFF-TK-100

FILTER FEED DATA SHEET

202LP-FFA-CFF-P-102	DST Return Pump, CFF-P-102
202LP-FFA-CFF-P-103	Filter Feed Pump, CFF-P-103
202LP-FFA-CFF-FE-180	FFT Supply to CFF Flow
202LP-FFA-CFF-FIT-180	FFT Supply to CFF Flow
202LP-FFA-CFF-LIT-108A	FFT Level
202LP-FFA-CFF-LIT-108B	FFT Level
202LP-FFA-CFF-TE-113	FFT Temperature (For Information Only)
202LP-FFA-CFF-TE-088	FFT Temperature (For Information Only)

BACK PULSE SYSTEM DATA SHEET

202LP-CFA-CFF-TK-101	CFF TK-101 Backpulse Tank - HOLD

MASTER SUBMITTAL REGISTER

15-2-001-MSR	MSR for the Cross Flow Filter System

3.4.1 Interface Definition

P&ID H-16-000022 identifies process interfaces within the facility for the FFT and Pumps.

P&ID H-16-000023 identifies process interfaces within the facility for the Cross Flow Filter.

Physical interfaces are as identified in DPD drawings. See H-16-001275 sheet 1 for specific interface details.

VENDOR shall design equipment to interface with BUYER's remote impact wrench.

Facility utility/service supplies are as follows:

- Treated Water

    - 15.4 gpm
- Service air, (Plant Air and Backpulse):
    - Service Air operating pressure range: 110 to 120 psig
    - Maximum Operating temperature: 135 degF
- Instrument Air (Valve Actuation and Instruments)::
    - Nominal unregulated Instrument air operating pressure range: 110 to 120 psig.
    - Upset unregulated insrumennt air operating range: 80-150 psig
    - Maximum Operating temperature: 135 degF
    - Instrument Air Dewpoint: -40 degF
- Remote nut interface details provided on drawing H-16-0001924.

3.5 Characteristics

3.5.1 Safety Characteristics

The functional requirements performance criteria and design bases are defined on associated data sheets and DPDs identified in Section 3.4.

3.5.1.1 The safety designations and design requirements shown in the following tables have been flowed down from BUYER safety documentation and are separated into equipment type and component level for safety performance criteria, The quality designations are also defined on the associated BUYER supplied equipment DPDs:

- Table 3-1 Tanks and Vessels
- Table 3-2 Deleted
- Table 3-3 Process Pumps
- Table 3-4 Pressurized Process Piping

3.5.2 Functional Characteristics

For process conditions, refer to the mechanical systems data sheets. (The VENDOR shall provide those parameters on the data sheet that originate with the component design.)

For the CFF skid design configuration, refer to the design proposal drawings supplied with this specification. Dimensional tolerances and physical interfaces are defined in the BUYER supplied DPDs.

Table 3-1 Tanks and Vessels

Item	Function	Safety	Quality	Seismic Design Category (SDC)	Limit State	Design Code	Basis
FFT	Atmospheric Tank	Non-Safety	EQA	SDC-2	C	ASME BPVC Section VIII	Fab to EQA requirements; Item is not Replaceable
CFF	Pressure Vessel	Safety	FQA	SDC-3	D	ASME BPVC Section VIII Code Stamp	Safety function: prevent fine spray release; Lower Head of Filter is not Replaceable
Backpulse Tank	Pressure Vessel	Safety	FQA	SDC-3	D	ASME BPVC Section VIII Code Stamp	Safety function: prevent fine spray release; Item is not Replaceable

Table 3-2 Deleted

Table 3-3 Quality Level Summary for Process Pumps

Pump Components	Quality Level	Basis	Design Code or Special Quality Level Based Requirements	NPH / Limit State
• Any primary containment pressure retaining transfer pump components including the pump column, seal materials, and pump discharge piping	FQA	RPP-RPT-58553, Fine Spray Leak	• ASME B31.3 including hydrostatic testing per paragraph 345 • CMTRs • PMI for all piping pressure-containing alloy components • Critical dimension identification and inspection • 100% radiography of circumferential butt welds	SDC-3 / Limit State D / SIL Rating Not Applicable
• Any structural components (incl. fasteners) supporting any FQA components	FQA	RPP-RPT-58553, Fine Spray Leak	• CMTRs • Critical dimension identification and inspection • 100% radiography of butt welds	SDC-3 / Limit State C / SIL Rating Not Applicable
• Motor • Impeller • Shaft • Bearings • Any structural components (incl. fasteners) supporting any EQA components if not already identified as FQA	EQA	Mission critical based on OR model analysis	• Design Code ASME B31.3 • Hydrostatic testing per ASME B31.3, ANSI/HI 11.6, or ANSI/HI 14.6 • CMTRs • Performance Tests • Motor Megger Test • Motor Overheating Test • 96-hr run-in witnessed testing • 100% radiograph NDE for wetted pressure retaining components	SDC-2 / Limit State C / SIL Rating Not Applicable
All other components of the In-Tank Transfer Pumps not identified as FQA or EQA above including • Lifting bail assembly • Vibration sensor(s) • Inlet screen	CQA	Not FQA or EQA	• Design Code ASME B31.3 • CoCs • Load tests for lifting bail assembly	SDC-1 / Limit State A / SIL Rating Not Applicable

Table 3-4 Pressurized Process Piping and Instruments

Pressurized Process Piping	Quality Level	Basis	Design Code or Special Quality Level Based Requirements	NPH / Limit State
• Primary containment piping • Primary Confinement Components of Instruments Identified as FQA on Datasheets	FQA	RPP-RPT-58553, Fine Spray Leak	• ASME B31.3 including hydrostatic testing per paragraph 345 • Pipe Wall thickness verification per Section 3.6.18.4.11 • Gasket and seal (including O-rings) material verification per Section 3.6.18.4.11 • CMTRs • PMI for all piping pressure-containing alloy components • Jumper Critical dimension identification and inspection • 100% radiograph NDE of piping welds • Instrument Calibration Certification	SDC-3 / Limit State D
• Any structural components (incl. fasteners) supporting any FQA components	FQA	RPP-RPT-58553, Fine Spray Leak	• CMTRs • Jumper Critical dimension identification and inspection	SDC-3 / Limit State C
All other components associated with instruments not identified as FQA	CQA	Not FQA or EQA	• CoCs	SDC-1 / Limit State A / SIL Rating Not Applicable

3.5.3 Cross Flow Filter System Physical Characteristics

A. The FFT contains two submersible pumps. One circulates the feed through the CFF filtration loop (CFF-P-103), while the second (CFF-P-102) returns waste with concentrated solids back to the Tank Farm.

B. There are two CFFs in series. (CFF-F-100, CFF-F-101).

C. Space for a backpulse system is maintained in the design, however this capability may be removed after testing. All aspects of the backpulse system are currently on HOLD.

D. The FFT includes a cooling jacket and loop that continually removes heat from the FFT during pumping operations. This is due to a significant amount of heat from the submersed pump and some influence of high flow rates in the CFF loop

E. The fluid velocity will be kept high through the CFFs to minimize the solid buildup on the filter walls. The axial velocity range inside the filter tubes will be maintained between 14.7 ft/s and 15 ft/s.

F. This LAWPS design will include the capability to chemically clean the CFF units. The CFF can be cleaned either directly by adding reagents to the feed inlet on each of the CFFs or by using eluate from the IX columns and back flowing through the CFFs.

G. The CFF will undergo a chemical cleaning operation to restore filter flux rates to "clean filter" conditions as required. The normal system operating temperature for filter cleaning is 68 to 113 °F.

The CFFs (CFF-F-100 and CFF-F-101) can be cleaned by the use of reagents and eluate from the IX System to displace solids accumulating on the CFFs. Capability to use other reagents for CFF cleaning, such as .5M oxalic acid, is provided. There are two chemical cleaning methods for the CFFs.

1. The first method is to batch process via the FFT, where the CFF flow control valves are closed and the FFT is emptied of waste; then 1M NaOH is added to the tank and recirculated through the filters for a set period. The 1M NaOH is emptied from the tank to the Cs Product Tank, and is followed by a treated process water flush to limit acid/base reactions and consumption of HNO3 and then drained to the Cs Product Tank. The FFT is filled with 0.45M HNO3 and recirculates through the filters for a set period and then discharges to the Cs Product Tank. A final solution of 1M NaOH is added to the FFT to neutralize the remaining HNO3 in the FFT loop and return the pH to about 12 prior to receiving waste and processing.
2. In the second method, the waste is flushed from the CFFs to the Cesium Product Tank, then 0.1M NaOH backflows from the IX System to the shell side of the CFFs, passes through to the tube side and then drains to the Cs Product Tank. Using a similar route as above, treated process water flush follows to limit acid/base reactions and consumption of HNO3 and then is drained to the Cs Product Tank. Eluate or .45M HN03 then backflows from the IX System to the CFFs for cleaning once the majority of the Cs is eluted directly to the Cs Product Tank. A final rinse with 1M NaOH is added to neutralize any remaining acid and return the pH to about 12 prior to receiving waste and processing, and then is drained to the Cs Product Tank.

H. Space is reserved for a backpulse system but it may not be implemented based on testing. If it is implemented, during both separation of solids and filter cleaning operations, back pulsing of filters (one at a time) will be utilized to remove filter cake (solids). During back pulsing the shell side pressure will be nominally 40 psid over the tube pressure, and will not exceed 70 psdi over the tube inlet pressure. The normal system operating temperature for back pulsing is 68 to 113 °F.

I. The transmembrane pressure (TMP) for the CFF is:

- Maximum Design: 100 psid TMP
- Nominal Operating: 7.5-50 psid TMP

J. The tube design for the CFF shall incorporate Mott Corporation sintered tube with a 0.5 inch inside diameter and 10' tube length. The porous tube dimensions shall be approximately 0.625 inch outside diameter. Support of tubes is critical for process and transportation. VENDOR to determine support spacing and location and provide BUYER location as part of design package. Supports must provide for drainage of filter cartridge and designed to account for seismic and transport loads on the filter tubes.

K. Process fluid physical characteristics are provided in Table 3-5 Physical Characteristics and chemical characteristics are provided in Table 3-7 Chemical Inventory for Nominal Feed to Cross-Flow filters.

Table 3-5 Physical Characteristics

Parameter	Unit	Nominal Value	Range
Density	g/ml	1.28	1.0 – 1.35
Viscosity	Centipoise (cP)	6	1 – 15
Temperature	°C	25	20 - 45
Solids Concentration	wt%	0.8	0 – 3.3*
Solids Particle Size	µm	7.5	0.01-210
Surface Tension	dynes/cm	80	70-100

*10wt% maximum in abnormal conditions

L. Expected tank nozzle loads shall be provided by BUYER via Datasheets for the CFF Tank. For the CFF filters and filter module the VENDOR shall determine and submit nozzle loading and interfacing piping loads to the BUYER. See H-16-001275 sheet 1 for interface pipe routing and pipe anchor types and locations.

M. Porous tubes comprising a filter element shall be nominally the same length. Fabrication of porous tubes from multiple shorter segments shall not be permitted. During manufacturing, the handling of finished porous tubes, filter elements in progress, and finished filter elements shall be minimized.

N. Nonporous solid metal end connectors shall be welded to the ends of each element. End connectors shall have the same inside diameter as the tubes, and shall be of the same grade material. The length of each end connector shall be as specified on DPD drawings.

O. Each CFF tube bundle shall be composed of a removable filter cartridge assembly consisting of filter elements that are assembled together with support plates, and inserted into a shell. The complete filter cartridge assembly shall be removable from the filter assembly as shown in Figure 3-8: CFF Cartridge Assembly. The tube to shell joint shall be provided with a sealing system to avoid bypass of solids to the shell side of the filter. The seals shall be captured on the cartridge base plate. All filter materials shall be compatible with the radioactive process stream provided

in Table 3-6 Radionuclide Inventory for Nominal Feed to Cross-Flow Filters and Table 3-7 chemical Inventory for Nominal Feed to Cross-Flow Filters.

P. Metal O-Ring seals are preferred over elastomeric seals. To minimize pressure losses and reduce fluid turbulence, the filter element inlets and outlets shall be chamfered and rounded between tube inside diameter (ID) and outside diameter (OD) and shall transition smoothly from the tube baseplate and upper plate to the bore downstream of the completed weld. A test port shall be provided between the primary and secondary O-rings as shown in Figure 3-10: CFF Cartridge to Base O-Ring Seal.

Q. The metal powder used to manufacture the porous tubes shall be all new. Material shall be 316L stainless steel. All porous tubes shall have an average pore size of 0.1 micron (nominal) determined via bubble point testing per ASTM E 128, Standard Test Method for Maximum Pore Diameter and Permeability of Rigid Porous Filters for Laboratory Use.

R. The VENDOR shall provide information, all data, and methods utilized to determine nominal pore size rating.

S. Tolerances for the porous tube outside diameter, inside diameter, concentricity (or wall thickness), overall length and straightness shall be included in the submitted design documents.

T. The VENDOR shall retain product fabrication files for maintainable pieces of equipment to ensure repeatability of fabrication for spares and future replacements. Product fabrication files shall be included in the final data package.

U. To avoid filter element damage, the CFF bundle assemblies shall be designed to minimize filter element-to-support plate movement or element-to-element contact during shipment, handling, or back pulsing.

Table 3-6 Radionuclide Inventory for Nominal Feed to Cross-Flow Filters

Component	Liquid Phase	Solid Phase	Component	Liquid Phase	Solid Phase
	Ci/liter	Ci/liter		Ci/liter	Ci/liter
106-Ru	1.32E-11	8.69E-14	236-U	1.97E-10	2.07E-11
113m-Cd	8.23E-06	2.15E-08	237-Np	8.71E-08	1.52E-11
125-Sb	9.21E-07	4.79E-09	238-Pu	1.04E-07	8.51E-08
126-Sn	1.07E-06	2.19E-09	238-U	4.06E-09	4.07E-10
129-I	1.43E-07	4.35E-14	239-Pu	1.17E-06	1.17E-06
134-Cs	1.68E-07	2.93E-11	240-Pu	2.66E-07	2.78E-07
137-Cs	2.57E-01	2.60E-04	241-Am	1.68E-06	3.03E-09
137m-Ba	2.44E-01	2.47E-04	241-Pu	1.51E-06	1.56E-06
14-C	2.27E-06	6.15E-09	242-Cm	6.24E-10	3.01E-09
151-Sm	3.12E-03	4.31E-04	242-Pu	3.10E-10	2.33E-11
152-Eu	3.20E-07	7.94E-08	243-Am	5.49E-10	1.45E-12
154-Eu	4.54E-06	5.28E-07	243-Cm	1.60E-08	2.54E-10
155-Eu	1.21E-06	2.87E-07	244-Cm	2.88E-07	4.71E-09
226-Ra	5.56E-11	8.19E-14	3-H	2.71E-06	1.26E-08
227-Ac	8.77E-09	1.59E-10	59-Ni	7.98E-08	5.76E-08
228-Ra	6.52E-09	2.13E-10	60-Co	4.32E-07	6.53E-08
229-Th	7.60E-10	9.23E-11	63-Ni	6.49E-06	4.68E-06
231-Pa	7.65E-09	2.71E-10	79-Se	6.58E-07	1.20E-09
232-Th	1.12E-09	1.22E-10	90-Sr	3.89E-04	8.48E-04
232-U	5.19E-10	4.97E-11	90-Y	3.89E-04	8.48E-04
233-U	7.81E-09	7.48E-10	93-Zr	1.21E-05	1.41E-06
234-U	4.69E-09	4.73E-10	93m-Nb	6.29E-06	1.37E-06
235-U	1.89E-10	1.91E-11	99-Tc	1.64E-04	2.09E-07

Table 3-7 Chemical Inventory for Nominal Feed to Cross-Flow Filters

Component	Liquid Phase, gmole/liter	Solid Phase, gmole/liter	Component	Liquid Phase, gmole/liter	Solid Phase, gmole/liter
Ag+	5.20E-06	7.56E-08	Nd+3	1.57E-05	9.73E-07
Al(OH)4-	1.66E-01	0.00E+00	NH3	1.34E-02	0.00E+00
Al+3	0.00E+00	2.20E-06	NH4+	1.29E-04	0.00E+00
As+5	1.81E-04	6.40E-07	Ni+2	3.51E-05	2.62E-05
B+3	1.39E-03	1.89E-05	NO2-	1.02E+00	1.83E-03
Ba+2	2.64E-08	2.20E-07	NO3-	1.78E+00	2.79E-03
Be+2	7.09E-05	1.13E-06	O(BOUND)	1.11E-04	2.23E-05
Bi+3	1.00E-04	1.16E-05	OH(BOUND)	2.71E-03	1.63E-04
C2O4-2	1.27E-02	1.12E-03	OH-	1.41E+00	0.00E+00
Ca+2	1.91E-05	5.47E-05	Pb+2	7.26E-04	9.25E-06
Cd+2	2.00E-05	1.02E-06	Pd+2	4.52E-05	9.25E-08
Ce+3	9.05E-05	2.10E-06	PO4-3	4.32E-02	5.35E-06
Cl-	9.46E-02	1.41E-04	Pr+3	9.29E-05	6.93E-07
CN-	1.76E-05	1.29E-08	Rb+	1.38E-06	7.25E-10
Co+3	5.20E-05	1.70E-06	Rh+3	1.52E-04	4.74E-06
CO3-2	5.23E-01	4.54E-07	Ru+3	4.05E-05	1.86E-07
CrO4-2	8.01E-03	0.00E+00	Sb+5	8.21E-05	2.07E-07
CrOOH	1.73E-04	4.70E-07	Se+6	1.96E-04	5.87E-07
Cs+	1.04E-04	0.00E+00	Si+4	8.02E-03	1.16E-06
Cu+2	1.62E-05	6.37E-12	SO4-2	6.61E-02	5.55E-05
F-	6.51E-02	5.82E-05	Sr+2	6.69E-07	4.10E-07
Fe+3	5.23E-04	4.66E-04	Ta+5	1.84E-10	2.70E-06
H+	5.12E-02	0.00E+00	Te+6	2.78E-05	2.44E-06
H2O	4.74E+01	5.09E-05	Th+4	4.39E-05	8.87E-11
Hg+2	3.14E-05	1.43E-07	Ti+4	4.40E-05	1.02E-06
K+	1.22E-01	3.60E-04	Tl+3	1.60E-04	4.78E-06
La+3	8.07E-06	8.52E-07	TOC	1.77E-01	9.45E-04
Li+	3.97E-04	2.92E-06	V+5	1.88E-08	9.62E-07
Mg+2	7.45E-04	2.02E-05	W+6	3.91E-05	4.40E-09
Mn+4	2.80E-05	3.28E-06	Y+3	1.42E-06	6.09E-08
Mo+6	1.86E-04	4.78E-07	Zn+2	9.99E-05	6.03E-07
Na+	5.61E+00	2.43E-03	Zr+4	1.98E-05	1.94E-07

3.5.4 Reliability

A. To support the facility 40-year performance lifetime, selection of system components should be based, in part, on component reliability in order to minimize the frequency of component replacements.

3.5.5 Availability

The BUYER has an overall system availability target of 70% for the LAWPS facility. To meet this target a number of items have been specifically applied to this specification. These items include fabrication quality controls, high specification replaceable equipment items such as pumps, valves, instruments and operational filter cleaning sequence times. The VENDOR should be aware that any operational sequences for filter back-flush and chemical filter cleaning processes have a direct impact on the filter availability to be online. The BUYER Operability and Reliability (OR) model currently has the CFF system available 91% of the time. The VENDOR shall review the sequence times provided below and advise acceptability to the overall operating sequences in contract Request for Informations (RFIs) and the Factory Acceptance Test Report.

- CFF Cleaning process including time to bring CFF back online allows for 24-36 hours every 660 hours (assumes this is 3.3% of the time the CFF is unavailable due to cleaning).
- Backpulse is assumed to occur while filter is online – no interruption of service.
- CFF is assumed to be down for approximately 5% of time due to random equipment failures and replacements.

3.5.6 Inspectability

Provision for periodic equipment inspection will be provided by the BUYER. Inspection ports are provided on the FFT to cover this requirement.

3.5.7 Maintainability

The Cross Flow Filter Skid maintainability characteristics include, but are not limited to, the following:

A. Maintenance and Repair Cycles.

Cross Flow Filter Skid is designed for a 40 year life. Repair by direct replacement is limited to the following:

- Remote valve: seats and plug
- Cross Flow Filter Cartridge
  - Remote bolting connections for Filter Cartridge Removal
  - O-Rings on Filter Cartridges
  - Nuts are Replaceable (Studs must have a 40 year life)
- Jumper connections for piping and instruments

B. Spare Parts

VENDOR shall provide recommended spare parts list including supply schedule for a 40 year facility design life.

C. Service and Access

The Cross Flow Filter Skid shall be designed for remote service. Design features shall provide capability for complete filter cartridge removal and replacement when fully drained. Any special tools that are required shall be supplied by the VENDOR.

3.5.8 Environment

The equipment is located in shielded and ventilated concrete vaults and not subject to outdoor environmental conditions during operations. The skids are not subject to outdoor environmental conditions other than for delivery and temporary storage (assume outdoor storage up to 1 year). Site storage conditions should be noted as they may exceed normal operating conditions.

Normal Vault/Pit Conditions:
Temperature range: 72°F to 108°F
Relative humidity: 0 to 100%.

Faulted Vault/Pit Conditions:

Temperature range: 34°F to 111°F
Relative humidity: 0 to 100%.

Delivery/Outdoor environmental conditions are provided for information:
Temperature range: -25°F to 115°F (direct sunlight)
Relative humidity: 0 to 100%.

NOTE: Faulted HVAC conditions are the equilibrium temperature range that will occur in the event of a prolonged HVAC outage. While the CFF system will not operate during a prolonged HVAC outage, it shall be designed to withstand any additional thermally induced loads.

3.5.9 Transportation and Storage

A. All components, unless specified otherwise in this section or related sections, shall be compatible with being transported by public roadway to contract specified destination. Items shall either be self-supporting or provided with packing and dunnage so as to ensure their stability and protection from damage.
B. Equipment shall be packaged, supported, and secured to the transport vehicle in a manner so it can withstand a 0.8g (forward) hard-braking stop, and rearward or lateral acceleration of 0.5g, as well as, shock and vibration loads associated with transportation. Calculations that demonstrate compliance with these requirements shall be included in the Packaging, Storage, Shipping, and Handling Plan (PSSH) described in Section 5.1. Note that this is the minimum requirement; if a supplier has more stringent requirements, the supplier's requirements shall be applied. Where equipment is braced internally, it shall be clearly marked to identify removal after installation.
C. Each unit shall be completely drained of all liquid prior to shipment. VENDOR shall be responsible for all equipment damage which occurs as a result of improper drainage and storage. Resilient seated valves shall be shipped in the open position.
D. Filter skid shall be completely weather protected for shipment.

3.6 Design and Construction

The CFF Skid shall be designed and constructed per the requirements of this specification, associated drawings and data sheets.

3.6.1 Parts/Materials/Processes

CFF skids, including structural steel attachments and module framework shall be fabricated from 300 series stainless steel (grade as specified on data sheets and DPDs). Certified Material Test Reports (CMTR) are required for all materials used for pressure boundary, supports, weld filler material, welded attachments and fasteners.. Other materials shall be supplied with a Certificate of Conformance (C of C).

The selection of parts, materials and processes used in producing the item shall follow the VENDOR's normal practices in meeting the requirements of the scope of work.

Additional material specification shall be as noted in specific equipment sections:

1. Deleted
2. Section 3.6.13 ASME Process Vessels Fabrication (CFF and FFT)
3. Deleted
4. Section 3.6.15 Structural Steel
5. Section 3.6.16 Piping
6. Section 3.6.17 Piping Materials
7. Section 3.6.18 Pipe Welding
8. Section 3.6.19 Jumper Fabrication
9. Section 3.6.20 I&C Requirements
10. Section 3.6.21 Electrical Requirements for Mechanical Equipment

3.6.1.1 Materials shall be as specified on the Mechanical Data Sheets (MDSs) or DPDs.

3.6.1.2 Material standard editions dated within the previous 10 years from the date of Subcontract award are permissible as long as VENDOR verifies that physical and chemical properties of material meet the requirements of the cited standard editions.

3.6.1.3 Material substitutions shall not be made without BUYER approval. Unless otherwise stated by the VENDOR in the substitution-related RFI, a substitution request constitutes a representation that the VENDOR:

A. Has investigated the proposed product or material and determined that it meets or exceeds the form, fit, function, and quality level of the specified product; and

B. Will provide the same warranty for the substitution as for the specified product.

3.6.1.4 Attachment point of spiders, braces, or other temporary attachments shall match the material of the item it is in contact with or attaching to.

3.6.1.5 Austenitic stainless steel (P-No. 8) welding materials for pressure boundary and load bearing welds shall contain a minimum delta ferrite content of five percent. The maximum ferrite content shall not exceed 12 % for post weld heat treatment (PWHT) applications. Compliance with the minimum and maximum ferrite requirements may be based upon the certified chemical analysis and the WRC Delta Ferrite Diagram or a ferrite gage complying with American Welding Society (AWS) A4.2. Alternatively, for Shielded Metal Arc Welding

(SMAW) electrodes and solid wire filler metal manufactured in the United States of America (USA), a CMTR may be used to confirm acceptability of the ferrite requirements.

3.6.1.6 Austenitic stainless steel material in contact with process liquids shall exhibit no chromium carbides or detrimental intermetallic phases as demonstrated by testing and accepting a minimum of one specimen per heat treatment lot in accordance with ASTM A262, Practice A.

3.6.1.7 Certified Material Test Reports are required for all filler materials. Certified Material Test Reports for gas shielded consumables shall reflect that testing was done with the same gas (gas mixture) as used in production.

3.6.1.8 The storage, baking and drying of all welding consumables (i.e., covered electrodes, flux cored electrodes and fluxes) shall be as recommended by the manufacturer. Segregation of carbon steel, low alloys, and alloy consumables is required during storage, baking, holding, handling (including portable ovens), and in the fabrication area. Shielding and purging gases shall be welding grade, having a dew point of less than or equal to (-) 40°F.

3.6.1.9 Contact materials shall be controlled and documented in accordance with VENDOR's inspection and test plan as approved by BUYER.

3.6.1.10 Contact materials including marking materials, temperature indicating crayons, adhesive backed and pressure sensitive tape, and barrier and wrap materials may be used only under the following limits:

A. The total halogen content shall not exceed 200 parts per million (PPM).

B. The total sulfur content shall not exceed 400 PPM.

C. No intentionally added low melting point metals such as lead, zinc, copper, tin, antimony and mercury.

D. Anti-spatter compounds shall not contain chlorine, fluorine, sulfur, mercury or other low melting point metals.

E. Materials and residue shall be completely removed when no longer required.

F. Cleaning materials may be non-halogenated solvents or potable water containing no more than 50 PPM chloride.

G. Marking materials and liquid penetrant materials used on austenitic stainless steels and nickel base alloys shall not cause corrosive or other harmful effects. A certification in accordance with quality clause B46 for penetrant materials shall be submitted for BUYER approval prior to fabrication.

3.6.1.11 Surfaces

A. Surfaces exposed to the waste fluid shall be free of pits, scratches, gouges, and sharp weld ripples that could entrap solids. Based on the location and quantity, scratches or gouges greater than 0.020 in. deep shall be repaired by one of the following.

1. Mechanically repair to the adjacent surface contour to eliminate areas that could potentially hold and/or trap contamination.
2. Weld repair (if required) using an appropriately qualified procedure and welder, and mechanically finish to the adjacent contour. Associated non-

destructive examination shall be in accordance with either the base material specification or the applicable welding code.

B. Exposed surface finishes of piping, plate, or bar that are exposed to the tank waste shall not exceed 32μ in. (Ra) in accordance with ASME B46.1.

C. Castings:
   1. The external surface shall not exceed 125 μ in. (Ra) in accordance with ASME B46.1
   2. Castings shall be free of cracks, tears, or other linear defects.
   3. Any discontinuity exceeding .06" deep after surface finishing shall be excavated and repaired by welding.
   4. Any discontinuity exceeding 1/16" size, but not exceeding .06" deep after surface finishing shall be blended smooth into existing contour at no steeper than 1in 3 slope.
   5. Randomly dispersed discontinuities of 1/64" or less shall be considered non-relevant and shall not be considered in the overall count. Areas deemed "spongy" are not acceptable and shall be removed by blending (to a depth not exceeding .05") or repaired by welding.
   6. Relevant discontinuities shall be randomly dispersed with a minimum spacing of 1/4". However, these discontinuities may be removed via blending if the depth does not exceed .05".
   7. As-cast surfaces in limited access regions of the hydraulic casing shall be removed, but are not subject to these requirements.

D. Conditions not addressed by these criteria shall be documented with proposed disposition on a Nonconformance Report (NCR) and submitted to the BUYER for approval prior to any rework or repair.

3.6.2 Radiation

A. Electromagnetic: N/A

B. Nuclear: Components, including elastomeric seals, must withstand 10^8 rads per year.

3.6.3 Cleanness and Foreign Material Exclusion

3.6.3.1 Prior to packaging an item, debris/contamination shall be removed using VENDOR's documented and approved standard procedure, unless specified otherwise. All items shall meet the ASME NQA-1 2008/2009A cleanness classification of Class B Cleanness. The surface shall appear clean and free of organic films and contaminates, when examined in accordance with ASTM A 380, and show no deleterious contamination when subjected to a wipe test of ASTM A 380. Wipe tests shall be made prior to the application of any preservative film (if required to maintain Class B level during storage period, prior to installation).

3.6.3.2 Deleted

3.6.3.3 All equipment openings shall be capped, plugged or sealed in accordance with ASME NQA-1-2008/2009A to prevent entry of foreign material and humidity and protected against corrosion and physical damage.

3.6.4 Corrosion of Parts

Items subject to deleterious corrosion shall be protected in accordance with ASME NQA-1-2008/2009A (e.g., using either contact-preservatives, inert gas blankets, or vapor-proof barriers with desiccants to absorb any moisture inside the container). The VENDOR shall submit for BUYER approval a description of the preservation methodology specific to each package level type.

3.6.5 Protective Coatings

Stainless steel materials are not to be painted unless noted otherwise on drawings.

3.6.6 Interchangeability

The CFF filter cartridge shall be interchangeable.

3.6.7 Identification and Marking

3.6.7.1 The following components shall be labeled:

A. Piping

B. Deleted

C. Major equipment (e.g., pumps, and motors)

D. Instruments

E. Vessels/Tanks

F. Any named safety structures, systems, and components (SSC) item or operator control.

3.6.7.2 Deleted

3.6.7.3 Equipment Identification Numbers, or EINs, and the associated Equipment Descriptions are provided in the design documentation.

3.6.7.4 Deleted

3.6.7.5 If BUYER design documentation does not contain the necessary EINs, the VENDOR shall request the missing EINs through the RFI process.

3.6.7.6 Valve Identification: Valves shall be supplied by the BUYER with the required identification attached to the valves and accessories. VENDOR shall take care to ensure the Valve tags and labeling remain legible and attached to the valves.

3.6.7.6.1 Deleted

3.6.7.6.2 Deleted

3.6.7.7 Label Materials

A. All labels not located in process pits shall use a Metalphoto® (anodized photosensitized aluminum) base. (Reference www.mpofcinci.com).

B. Metalphoto labels shall use a black background (foreground color will be bare aluminum).

C. All labels located in process pits shall be laser-engraved stainless steel

D. Stainless steel labels shall use black text on a stainless steel (plain/natural) background.

E. Labels shall be 15 ga thickness.

F. All materials contacting austenitic stainless steel and nickel alloy surfaces shall not be compounded from, or treated with chemical compounds containing elements in such quantities that harmful concentrations are leachable, or that they could be released by breakdown under expected environmental conditions and could contribute to intergranular cracking or stress corrosion cracking, such as those containing fluorides, chlorides, sulfur, lead, zinc, copper, and mercury.

G. Weathering: The label shall remain readable after 7,000 hours of exposure in a weathering deck in accordance with ASTM D4329 using Ultraviolet A 340 lamps.

3.6.7.8 Labeling Requirements

A. The required labels are as shown in Figures 3-14 through 3-16. Application of labels that are inconsistent with this standard, unless addressed by approved deviations, are prohibited.
B. Font - USE ALL CAPITAL SIMPLE BLOCK TYPE FONT. All labels in a given area shall be of the same font.
C. Spacing between words shall be at least one full character width.
D. Spacing between lines on the label shall typically be at least one times the character height of the line being printed.
E. Power and multi-conductor control cables shall have cable numbers marked at the origination and termination and at junction points in between. (i.e. pull boxes and manholes).
F. Cables shall be identified in accordance with the cable schedule. Internal jumper shall be identified with the wire number of the associated external cable.
G. The alphanumeric conductor identifications used shall be the wire numbers shown on the wiring diagrams. Wire numbers shall also be marked on terminal block identification strips in black indelible ink.
H. Permanently label conduits and cable tray with numbers shown on the drawings, at both ends. For 10 foot maximum length, place on label at the center.

Figure 3-14: NF Label Coding

DESIGN ID: NF	LABEL SIZE CODE: B2	WIDTH: 4.00"	BORDER: 0.250"	HEIGHT: 2.50"

LINE	BAR CODE REF DEN	MAX CHAR	ROW HGT	JUST C/L/R	START SIDE TOP	FONT
1		23	0.26	C	2.00 0.40	R-HEL-BOLD
2		32	0.17	C	2.00 0.75	R-HEL-BOLD
3		32	0.17	C	2.00 0.95	R-HEL-BOLD
4		29	0.17	C	2.00 1.35	R-HEL-BOLD
5		18	0.13	R	-0.05 1.67	R-HEL-BOLD
6	6 7.1	9	0.16	C	2.00 2.30	R-HEL-BOLD
7		9	0.25	C	2.10 2.15	R-HEL-BOLD

It is designed for use in harsh environments. The large size is suitable for major components such as tanks, vessels, ventilation skids, breakers, pumps, and motors.

Figure 3-15: NH Label Coding

DESIGN ID: NH	LABEL SIZE CODE: C0	WIDTH: 3.00"	BORDER: 0.188"	HEIGHT: 1.50"

LINE	BAR CODE REF DEN	MAX CHAR	ROW HGT	JUST C/L/R	START SIDE TOP	FONT
1		23	0.19	C	1.50 0.36	R-HEL-BOLD
2		32	0.13	C	1.50 0.60	R-HEL-BOLD
3		32	0.13	C	1.50 0.73	R-HEL-BOLD
4		29	0.13	C	1.50 0.99	R-HEL-BOLD
5		18	0.10	R	-0.20 1.16	R-HEL-BOLD
6		9	0.11	C	1.50 1.49	R-HEL-BOLD
7	6 7.1	9	0.15	C	1.60 1.39	R-HEL-BOLD

It is designed for use in harsh environments. This is the primary label for use in the tank farms. This label should be specified in all cases except for individual control panel instruments and controls, hand switches, etc., or where size prohibits.

Figure 3-16: NL Label Coding

202LP-VTP-V-461

LO SIDE ISOLATION VALVE

NL S027519WT

DESIGN ID: NL	LABEL SIZE CODE: CA	WIDTH: 2.00"	BORDER: 0.125"	HEIGHT: 1.00"

LINE	BAR CODE REF	DEN	MAX CHAR	ROW HGT	JUST C/L/R	START SIDE	TOP	FONT
1			23	0.13	C	1.00	0.20	R-HEL-BOLD
2			25	0.10	C	1.00	0.40	R-HEL-BOLD
3			25	0.10	C	1.00	0.50	R-HEL-BOLD
4			09	0.10	C	1.00	0.83	R-HEL-BOLD
5	4	7.1	09	0.10	C	1.10	0.73	R-HEL-BOLD

3.6.7.9 Label Information

Equipment labels shall contain:

A. Equipment Identification Numbers or EIN (provided by BUYER)

B. Equipment Description (provided by BUYER)

C. Bar Code (provided by BUYER)

D. Fed From [insert power supply breaker information] (if applicable)

E. Additional labelling requirements for Electrical Equipment and Motor Control Centers

3.6.7.10 Electrical Equipment

A. The Following Specific Label Information Is Required By Code: Rated Voltage, Number Of Phases, Supply Power Source, Type (Normal, Standby, Or Emergency), And Location.

B. Control Threshold Switches Are Labeled For Their Function.

C. Switches Are Labeled With Position (On-Off, Hand-Off-Auto, Etc.) Indication And Direction Of Operation, As Necessary.

3.6.7.11 Attaching Labels

A. Labels may be attached to the equipment using permanent stainless steel fasteners, or hung in a permanent fixed location with stainless steel aircraft cable,

as best suited to the application. Stainless cable shall be 0.063 inches in diameter in a 7 x 7 strand matrix and fastened with stainless steel wire crimps.

B. All pressure boundary material with labels attached using stainless steel fasteners shall have sufficient wall thickness or reinforcement to address stress concentration and reduced wall due to the fastener holes.

3.6.7.12 Label Placement

A. Labels shall be placed as follows:
- To be readily visible and readable
- Horizontal (except hanging labels)
- To eliminate identity confusion
- So they will not be easily damaged or cause hazard to the operator
- To avoid obscuring indications or interfering with equipment operation.

B. Labels are placed on flat surfaces to the extent possible:
- On pipes, place the label along the horizontal run vs. around the pipe
- Horizontal (except hanging labels)
- On motors, tanks, and other curved surfaces, locate the flattest portion

C. Large equipment (generators, vessels, etc.) shall be labeled in multiple locations.

D. Deleted.

E. Deleted.

F. Wire shall not be used to hang tags inside electrical equipment.

3.6.8 Nameplate

Applicable to CFF-TK-100, CFF-EXCH-104, CFF-F-100, and CFF-F-101 only. On CFF filter the nameplate shall be located on the filter cartridge assembly and on the filter base assembly.

Provide a nameplate per ASME BPVC Section VIII. Nameplate should include, as a minimum, the following:

- Equipment Identification Number
- Manufacturer's name
- Year built
- MAWP (Maximum Allowable Working Pressure)
- MDMT (Minimum Design Metal Temperature)
- Material of construction
- Weight of the vessel and internals
- U stamp (as applicable)

The nameplate shall be installed in the location and manner identified on the DPD. Additional manufacture's nameplate, if any, shall be installed in the like manner and adjacent to the ASME BPVC Section VIII nameplate. The nameplate shall be constructed of 300 series stainless steel and compatible with the vessel material.

3.6.9 Human Factors Engineering

The CFF skid is located in a concrete pit and operated using remote valves. Human factors are not applicable to the CFF skid. The valve actuators are located above the pit which allows access to the actuators for maintenance.

3.6.10 Document Submittals

3.6.10.1 General

This section provides the general procedures and requirements for preparing and processing engineering, design, fabrication, testing, and other submittals. Specific pump submittals requirements shall be as defined in Section 3.6.12.2.

3.6.10.1.1 Refer to TFC-BSM-IRM_DC-C-07 for BUYER submittal process.

3.6.10.1.2 For each formal submittal (regardless document type), VENDOR shall complete transmittal letter A-6005-315, provided by BUYER.

3.6.10.1.3 The VENDOR shall track and record delivery and review status of submittals by maintaining a submittals list and retaining copies of Submittal Forms and letters of transmittal itemizing delivered items and reports during course of work. Retain until construction completion. Notes or markings added by hand shall be legible, utilizing permanent non-smearing marking media, such as ink or felt tip markers, in a contrasting color. An alternate means of recording delivery may be used with BUYER approval.

3.6.10.1.4 Requests for Information (RFI) shall be submitted on form A-6003-417 (provided by BUYER).

3.6.10.2 Submittal Type

3.6.10.2.1 The MSR provides a roadmap to the specific sections that contain submittals by reference in the "Applicable Section Submittal Reference" column.

3.6.10.2.2 The MSR lists the document/record, the type (Approval or Acceptance), the number of copies (paper and/or electronic), and the date required (this may be either actual date or a calculated date such as 10 days before fabrication).

3.6.10.2.3 Required submittals generally fall into one of two categories:

A. Approval Required prior to work (APP)
B. Approval Not Required, for information/Record only (INF/REC)

3.6.10.3 Submittals for Approval

3.6.10.3.1 VENDOR shall submit preliminary 60% and final equipment design review packages. The packages shall include but not be limited to:

A. Preliminary Calculations for the FFT Vessel and CFF skid structural supports. Calculations shall be complete enough to confirm general sizing and operating parameters of vessels, and filters to ensure that there will be no unforeseen issues moving forward into final design.
B. Preliminary Drawings for the FFT Vessel and the CFF skid. These drawings need to provide enough detail to show a conceptual layout, interface dimensions, and pneumatic schematics.
C. Preliminary Datasheets that include VENDOR information and design and operating parameters. Information shall include but is not limited to: instrumentation, enclosures and accessories.

3.6.10.3.2 BUYER's review of VENDOR's drawings, or release of the equipment for shipment by BUYER's representative, shall in no way relieve VENDOR of the responsibility for complying with all the requirements of this specification and the purchase order.

3.6.10.3.3 For each major piece of equipment included in the contract (i.e., Vessels, Pumps, and Filters), the order shall include timely delivery of the following documents as defined in box 17 on the MSR by the particular document.

A. Overall fabrication work plan.
B. Quality assurance program for design and fabrication.
C. Design software verification and validation report.
D. List of fabrication codes and standards.
E. Non-destructive examination procedures.
F. Calculations justifying the proposed vessel design. Calculations shall include, but not be limited to:

1. Code calculations. Design calculations shall include relevant ASME BPVC Section VIII, Division 1 formulas and source paragraphs, values used in the formulas, the calculated results and comparison with acceptable values. Where calculations are based on other than the ASME BPVC Section VIII, Division 1 formulas, the source of the formulas shall be referenced. Where computer program software is used for calculations, each calculation shall include a brief program description of the software shall be given, including the name and version of the program software. If the program software is not commercially available to industry, VENDOR shall maintain and provide, upon request, program software documentation.
2. Seismic calculations including base horizontal seismic force and moment inclusive of fluid induced impulsive and convective forces, and loads for anchorage and anchor bolt design
3. Vessel operational stresses limited to less than 50 percent of the material yield stress.

4. Support calculations including empty weight, operating weight and location of center of gravity.
5. Calculations associated with lifting and tailing lugs.
6. Nozzle load analysis for local and gross effect, per WRC 297 and WRC 537.
7. Design of attachments; internal, external, lifting, and hold downs
8. Thermal and discontinuity stresses as applicable
9. Fatigue analysis as applicable for vessels in fatigue services
10. ASME B31.3 design calculations shall be performed by the VENDOR for items such as piping stress analysis, branch reinforcement and unlisted components.

G. Design details of each welded joint uniquely identifying the parts joined by the weld. In some cases the use of AWS welding symbols, properly annotated, and applied to the fabrication drawings will suffice for this requirement.

H. A weld map identifying each weld joint by weld number (as applicable).

I. Welding procedure specifications (WPS), and Procedure Qualification Records (PQR) covering each weld.

J. Welder, visual inspector, and NDE personnel qualification records (including eye tests for inspectors).

K. Liquid penetrant material certifications.

L. A dimensional drawing for the pressure vessel, indicating all dimensions necessary for support, lift and shipping of the completed vessel. Tolerance held for such dimensions shall be noted, either on the specific dimension or in general notes. Dimensions locating centers of gravity which are generated by calculation shall be so noted on the drawing, and the calculations shall be submitted with the drawings.

M. Detail drawings shall give a complete dimensional and material definition of every part designed and fabricated. Parts available commercially with standard dimensions (i.e. – standard forgings, flanges, etc.) shall be identified by manufacturer and part number.

N. All submittals and records pertaining to the nondestructive examination (NDE), base materials, filler materials, fabrication, and inspection shall be traceable to the area and part inspected and be accessible for BUYER's examination.

O. VENDOR shall provide certified copies of the test reports including ASME BPVC Section VIII, Division 1, U-1 data reports as specified in the purchase order.

P. VENDOR shall provide a Fabrication Inspection and Test Plan which shall include the shop traveler summaries. Where applicable, the fabrication/heat treating sequence and methodology shall be addressed.

Q. VENDOR shall provide a compliance matrix.

R. Coating Procedures, including Painting, mixing, and surface preparation procedures compliance matrix.

3.6.10.3.4 VENDOR shall submit the following plans for BUYER's approval:

A. Assembly plan

B. Factory acceptance test plan, test procedures and test reports

C. Lifting and rigging plan.

D. Cleaning plan.

E. Packaging and shipping plan.

F. Functional test plan, test procedures and test reports

3.6.10.3.5 VENDOR shall prepare a final data package for each piece of equipment. Final Data package submittal items shown on the MSR shall be submitted and approved by the BUYER prior to release for shipment. This package shall include as applicable Filter Feed Tank, CFF module, and Jumper Assemblies:

A. Fabricators Certificate of Conformance.

B. Signature Verification sheet.

C. Receiving Inspection Reports.

D. VENDOR's Certificate of Conformance per B79.

E. Certified Material Test Reports (CMTR) (including chemical and physical properties test results, and heat treat condition and corrosion test results as defined in the applicable MDSs or DPDs) per B49.

F. Fabrication Travelers per B13.

G. Weld Inspection Reports.

H. Weld Maps (as applicable).

I. Weld History Reports.

J. Nondestructive Examination Reports.

K. Nondestructive Testing Material Certification Reports per B46.

L. Calibration Certificates/Reports per B12 or B61 as applicable.

M. Dimension Verification Reports (including critical dimensions).

N. Fastener Tightening Reports.

O. Factory Acceptance and Pressure Test Reports per B52.

P. Flushing Records: records verifying acceptable completion of flushing.

Q. Lift Test Records with weight certifications

R. Final Inspection Report

S. Miscellaneous Inspection Reports.

T. Non Conformance Reports (closed).

U. ASME BPVC Section VIII Code data report (if applicable).

V. Manufacture's/VENDOR's data (i.e., data sheets, material cut sheets, operation & maintenance manuals, etc.) in accordance with quality clause B33.

W. Request for Information (pertinent to the fabricated assembly).

X. Approved Design Changes - Design Change Notices (DCN's).

Y. Calculations of As-Built condition.

Z. Detailed As-Built Drawings.

AA. Deleted.

BB. Detailed recommended spare parts list for startup and operations in accordance with quality clause B82.

CC. Electrical inspection and testing reports, records verifying electrical insulation, continuity and grounding tests.

DD. Qualification data including seismic qualification for safety-related equipment

EE. Manufacturer's data and seismic qualification documents for electrical cabinets and enclosures.

FF. Vendor data sheets and color charts

GG. Installer's certificate or training documentation (for decontaminable coatings, where required in contract documents)

3.6.11 Personnel and Training

Personnel shall be trained in accordance with the approved Quality Assurance Plan (QAP).

3.6.12 In-Tank Transfer Pump Design and Fabrication

3.6.12.1 Pump General

This Specification provides requirements for the design, fabrication, examination, testing, packaging, shipping and lifting of Low Activity Waste Pretreatment System (LAWPS) in-tank process transfer pumps and mounting assemblies. Each in-tank transfer pump will be installed onto a riser at the top of the appropriate tank and will have a vertical pump column that reaches down near the bottom of the tank.

3.6.12.1.1 VENDOR shall provide submersible in-tank transfer pump assemblies as specified throughout this document; the following summary of major equipment applies to each transfer pump required:

A. Process transfer pumps (quantity 2, tag numbers (EINs) listed below)
   1. 202LP-FFA-CFF-P-102
   2. 202LP-FFA-CFF-P-103

B. Electric drive motor
   1. 202LP-FFA-CFF-PM-102
   2. 202LP-FFA-CFF-PM-103

C. Pump column

D. Pump mounting hardware including but not limited to pump mounting flange(s), pump mounting flange gasket(s), and lifting bails, and any associated mounting fasteners.

E. Process pipe interfacing connections including PUREX connector nozzles (PUREX connector nozzles shall be provided by BUYER as identified on DPDs)

F. Power and control cabling (internal) to flange/base plate mounted junction boxes. The power junction box shall be a separate junction box from the instrumentation junction box.

G. Instrumentation

H. Any special tools and/or equipment required for shipping, handling, and installation

I. Variable frequency drive (VFD) system

J. Pump Lifting Fixture for use with a 30 ton crane hook

K. Pump transport container

L. Pump Tailing frame assembly for lifting pump from horizontal to vertical using a single point lift

3.6.12.1.2 Work by Others

A. Design and delivery of interconnecting power, control, and instrumentation cabling beyond the transfer pump junction boxes

B. Transfer pump support structure other than the pump base plate

C. Onsite installation, operation, and on-site services

D. BUYER will provide Design Proposal Drawings (DPDs) defining pump configuration and mounting details for each pump assembly. The DPDs will include the following:
   1. Design features
   2. Critical dimensions (e.g., tank riser diameter, height from top of riser to bottom of tank, etc.)
   3. Important interface characteristics (e.g., riser attachment details, water/power/control/instrumentation connection details, etc.)
   4. Remote nut design that will interface with the remote impact wrench.

E. BUYER will provide pump data sheets which will include:

1. Number of pumps required
2. Required flowrate
3. Discharge head requirements
4. Horsepower requirements (nameplate and brake horsepower) (VENDOR to Verify)
5. Required duty cycles
6. Net positive suction head (NPSH) limitations. (VENDOR to Verify)
7. Fluid characteristics (e.g., density, viscosity, % solids, etc.)
8. Maximum allowable working pressure
9. Other information (see data sheet for details)

Refer to BUYER-provided pump data sheets. However, the VENDOR is responsible for completing the BUYER-provided pump data sheets with missing information.

3.6.12.1.3 Critical Dimensions

This section describes critical dimensions that apply to the pump assemblies. Fabrication drawings shall clearly identify all critical dimensions in a manner that sets them apart from all other dimensions (e.g. marking these dimensions as "critical dimension" or adding a note to this effect). Critical dimensions are as follows.

A. Dimensions and tolerances associated with process fluid route above the tank riser interface including:
   1. Piping and process fluid route geometry, including wall thickness, above the tank riser interface (including the pump mounting flange
B. Dimensions and tolerances associated with wetted part (see Definitions) interfaces including:
   1. Discharge piping connection geometry
   2. Pump mounting flange geometry
C. All critical dimensions shall be individually verified and properly documented on dimensional inspection reports.

3.6.12.2 Pump Submittals

3.6.12.2.1 Preliminary Design Data (i.e., VENDOR proposal package)

A. Catalog or descriptive data
B. Preliminary pump curve
C. Preliminary outline drawing
D. Preliminary cross section drawing with Bill of Material
E. Motor data information (cut sheet and catalog/descriptive information)

F. Handling instructions for lifting from horizontal to vertical position using mounting plate lifting lugs

G. List of Codes and Standards

3.6.12.2.2 60% Design Review Package

The VENDOR shall prepare a 60% Design Review Package that documents the DST Return Pump and Filter Feed Pump design, calculations, material selection, and performance. The 60% Design Review Package shall address, at a minimum, the topics defined below. Comments received by the VENDOR shall be dispositioned to the satisfaction of the BUYER.

The following information shall be included in, but is not limited to, the 60% Design Review Package:

A. General VENDOR information, specifications, and Bill of Materials.

B. Drawings

The following drawings and details shall be included as part of the 60% Design Review Package.

1. Assembly drawings showing overall dimensional interfaces, major components, wetted part geometry, pump assembly weight, and pump assembly center of gravity
2. Bills of Material or parts list
3. Electrical power, control, and instrumentation interface drawings and wiring diagrams, general arrangement drawings and wire termination documentation.
4. Instrumentation and power terminal box location drawings
5. Interface connection types, sizes, and locations
6. Electrical drawings covering general arrangements, wiring cable routes, wire termination, circuit schedule

C. Calculations

The VENDOR shall include calculations as part of the 60% Design Review Package. The calculations shall contain sufficient information to support the design and to verify requirements of this Specification are met. Calculations shall conform to VENDOR's NQA-1 qualified program. The following (as a minimum) shall be addressed:

1. Pump sizing calculations justifying pump selection.
2. Net Positive Suction Head Required ($NPSH_R$), horsepower, head, and pump efficiency versus capacity.
3. Performance curves shall be plotted for operating speeds at 100 rpm increments or less.
4. Performance corrections for viscosity and specific gravity.

5. Pump critical speed.
6. Individual assembly and total assembly weights.
7. Bearing selection analysis based on radial and axial thrust loads.
8. Lifting attachment design including associated lifting and rigging equipment for lifting the Transfer Pump from both the horizontal and vertical positions.
9. Maximum pump run time when deadheaded.

D. Data sheets

VENDOR shall fill in, correct, and complete BUYER provided pump data sheets with vendor information as appropriate. BUYER provided pump data sheet format includes motor data.

E. Qualification data including seismic qualification for safety-related equipment

3.6.12.2.3 Final Design Review Package

The VENDOR shall prepare a Final Design Review Package(s) that documents the transfer pump design, calculations, material selection, performance, and adequacy of the various loadings incurred during operation, handling, and delivery. The Final Design Review Package shall address, at a minimum, the topics defined below. Comments received by the VENDOR shall be dispositioned to the satisfaction of the BUYER.

The following information shall be included in, but is not limited to, the Final Design Review Package:

A. Updated general VENDOR information, specifications, and Bill of Materials
B. Life expectancy analysis including consideration of radiation and abrasive slurry applications and identification on which components are life-limiting.

   1. Mean Time Between Failure (MTBF) analysis
   2. Analysis of radiation tolerance of non-metallic parts and resistance to degradation based on the waste forms physical, chemical, and rheological characteristics
   3. Vibration intensity chart that estimates vibration levels charted over time
   4. Recommended a maximum vibration intensity at which time the BUYER should consider pump replacement

C. Nonmetallic component manufacturer's data of radiation resistance.
D. Projected motor data, speed/current curves, torque/speed curves, power factor/power output curves, torque/current curve, and current/output power and input power/output power curves.
E. Catalog/descriptive data on instruments and components, including programmable logic controllers (PLC), and field devices.
F. VENDOR shall provide a list of instrumentation and recommended set points as appropriate, e.g., motor/pump vibration high and high-high alarm points.
G. Drawings.
H. Calculations.

I Manufacturers data including seismic qualification documentation.

3.6.12.2.4 Final Data Package

Following completion of fabrication, assembly, and testing, the final data package shall include:

A. Signature Verification sheet

B. Completed testing documentation with completed sign-off sheets including but not limited to:

   1. Factory Acceptance Test Reports
   2. Lift Test Records with weight certifications
   3. Certificates of Calibration for VENDOR owned instruments and measurement equipment used during testing.

C. Metal component chemical and mechanical test reports including but not limited to:

   1. Certified Material Test Reports
   2. Positive Material Identification documentation

D. Certificates of Conformance

   1. Nonmetal component Certificates of Conformance
   2. VENDOR's Certificate of Conformance

E. Inspection/examination reports including but not limited to:

   1. Receiving Inspection Reports
   2. Weld Inspection Reports
   3. Nondestructive Inspection Reports
   4. Dimension Verification Reports with critical dimensions verified
   5. Fastener Tightening Reports
   6. Impeller balancing data
   7. Electrical product testing, if required
   8. Harmonic distortion level report, if relevant
   9. Final Inspection Report
   10. Non Conformance Reports (closed)
   11. Commercial Grade Item (CGI) Reports, for Safety (FQA) items, the VENDOR shall meet the requirements of the BUYER's CGD plan
   12. Megger and continuity test reports

F. Updated VENDOR data including but not limited to:

   1. As-built drawings with critical dimensions identified

2. Updated calculations
3. Updated performance curves and associated data based on test results

G. Fabrication Documentation

1. Liquid Penetrant Material Certification
2. Fabrication Travelers

H. Requests for Information (pertinent to the fabricated assembly)

I. Approved Design Changes - Design Change Notices (DCNs)

J. Installation, start-up, operation, maintenance, removal, and disassembly instructions: The VENDOR shall provide Operation and Maintenance Manual(s) for record documentation that shall also include step-by-step installation, start-up, operation, maintenance, removal, and disassembly instructions. The manual(s) shall contain, as a minimum:

1. Installation instructions for installing the pump onto the appropriate LAWPS tank riser
2. First-time start-up instructions
3. Removal instructions for removing the pump from the appropriate LAWPS tank riser
4. Full shop assembly/disassembly instructions with illustrations down to the individual component level (assembly/disassembly activities may be required at any time after delivery to the BUYER at the BUYER's discretion or during removal and decontamination procedures)
5. Operation instructions
6. Preventative maintenance requirements for operation and storage: Preventative maintenance instructions shall include provisions for two types of long-term storage:
   a. In a "dry" uninstalled horizontal position
   b. Installed in a tank riser typically with the pump submersed in tank waste
7. If these items are not included elsewhere in the Final Design Review Package, the Operation and Maintenance Manual(s) shall include, or provide as a separate volume, the following items:
   a. Instrumentation instructions
   b. Alarm set points
   c. Allowable operating regions
   d. Updated pump data sheets (including motor data)
   e. Component manufacturer data sheets or cut sheets
   f. Component manufacturer operation & maintenance manuals

g. Component manufacturer specifications

h. Component manufacturer drawings/diagrams

i. Calibration charts

j. Motor nameplate data

k. Connection diagrams

3.6.12.2.5 All Final Data Package submittals must be submitted and approved by Buyer prior to shipment of equipment.

3.6.12.2.6 Calculations

The VENDOR shall include calculations as part of the Final Design Review Package. The calculations shall contain sufficient information to support the design and to verify requirements of this Specification are met. Calculations shall conform to VENDOR's approved QA program The following (as a minimum) shall be addressed:

A. Pump sizing calculations justifying pump selection
B. Net Positive Suction Head Required (NPSHR), horsepower, head, and pump efficiency versus capacity.
C. Performance curves shall be plotted for operating speeds at 100 rpm increments or less.
D. Performance corrections for viscosity and specific gravity.
E. Pump critical speed.
F. Minimum fluid level above pump inlet at startup.
G. Minimum fluid level at pump shutoff.
H. Individual assembly and total assembly weights.
I. Bearing selection analysis based on radial and axial thrust loads
J. Lifting attachment design including associated lifting and rigging equipment for lifting the Transfer Pump from both the horizontal and vertical positions .
K. Thermal stresses.
L. Seismic response of Transfer Pump assembly.
M. Bearing selection analysis based on radial and axial thrust loads.
N. The VENDOR shall provide calculations identifying the loads indicated below that will or could be applied to the BUYER's support structures due to static, seismic, and dynamic operating forces. Seismic design in accordance with Section 3.6.22 NPH Requirements.

	Normal	**MAX**
Vertical force at transfer pump base plate (kips)	TBD by VENDOR	TBD by VENDOR
Horizontal force at transfer pump base plate (kips)	TBD by VENDOR	TBD by VENDOR
Moment at transfer pump base plate (ft.-kips)	TBD by VENDOR	TBD by VENDOR

O. Data sheets: VENDOR shall fill in, correct, and complete BUYER provided pump data sheets with vendor information as appropriate. BUYER provided pump data sheet format includes motor data.

3.6.12.2.7 Drawings

The following drawings shall be included as part of the Final Design Review Package. Drawings shall be as-built and incorporated into the Final Design Package.

A. All assembly and detailed fabrication drawings showing all interfaces, all components, pump assembly weight, and pump assembly center of gravity.
B. Bills of Material or parts list.
C. Electrical power, control, and instrumentation interface drawings and wiring diagrams.
D. Extension spool drawing (as applicable).
E. Special tooling drawings.
F. Lifting beam drawings.
G. Tailing frame drawings.
H. Instrumentation and power terminal box location drawings
I. Interface connection types, sizes, and locations.
J. Other information (see data sheet for details).

3.6.12.3 Pump Manufacturers

Subcontracting to other manufacturers is to be in accordance with contract documents. The preferred manufacturer for sealless canned submersible pumps is:

Curtiss-Wright EMD
1000 Wright Way
Cheswick, PA 15024
(724) 275-5000

Contact
Eric Conaway
(724) 275-5606
EConaway@curtisswright.com

3.6.12.4 Pump Materials

3.6.12.4.1 Unless otherwise specified, all materials and all material components and parts, associated with manufactured equipment, including items permanently installed into systems, subsystems, and/or assemblies, shall be new and unused.

3.6.12.4.2 Deleted

3.6.12.4.3 Materials of construction shall be selected to withstand the transfer pump's mission and installed environment. Motor insulation materials shall be selected for use in high radiation environments.

3.6.12.4.4 Aluminum, brass, bronze, and copper base materials, if used, shall not come into contact with the waste fluid.

3.6.12.4.5 Unless specified elsewhere in this specification, pump material required for any components that come into contact with process fluid (i.e., wetted parts) is stainless steel or other BUYER-approved material. Grade 316/316L is preferred.

3.6.12.4.6 Although non-metallic materials should be avoided altogether to extend the life expectancy of the pump assembly, if other non-metallic materials are required where the material will come into contact with process fluid, non-metallic materials may be allowed with BUYER approval. Chemical and physical properties of elastomers shall be suitable for the chemical and radiation environment in which they are used.

3.6.12.4.7 Dissimilar grades of stainless shall be used for any applications where steel will be in contact and slide together. For example, a Nitronic 60 bolt would work with a base metal of 304.

3.6.12.4.8 The Transfer Pump flange and mounting assembly shall be stainless steel. The flange gasket shall be a Linebacker™ flange gasket with an EPDM Seal mounted and retained to bottom of pump flange.

3.6.12.4.9 Material used for wetted parts (i.e. parts designed to come in contact with process fluid during normal operations), rotating members (e.g., motor, impeller, and impeller shaft), bearings, and any components that provide a structural support function for those components (including motor body, fasteners and all weld filler materials) shall conform to ASTM or ASME. Such materials (excluding the copper rotor bars and connection rings) shall be provided with Certified Material Test Reports (CMTRs).

3.6.12.4.10 Positive Material Identification (PMI) will be required for all alloy material wetted parts above tank riser interface and any components that provide a structural support function for those components (incl. fasteners and all weld filler materials). PMI will be performed as close to the actual final installation as practical to assure the correct alloy materials are installed where intended.

3.6.12.4.11 For all other materials not specified a Certificate of Compliance (C of C) shall be provided.

3.6.12.4.12 Vendor shall submit safety data sheets for elastomers, surface coatings, and lubricants for any and all such materials being provided.

3.6.12.4.13 Radiation shield material if defined on DPDs shall be 300 series stainless steel.

3.6.12.4.14 All piping shall be seamless.

3.6.12.4.15 Use of hard surface overlay products shall be reviewed with the BUYER to ensure compatibility with the tank waste. Specifically, any product that uses a cobalt binder shall be avoided.

3.6.12.4.16 All elastomers and thermoplastics used shall be approved by the BUYER. Chemical and physical properties of the elastomers shall be suitable for the chemical and radiation environment in which they are used and meet the design life. A VENDOR's C of C is required for the nonmetallic components. Datasheets identify preferred elastomeric materials.

3.6.12.4.17 All materials (including adhesives) contacting austenitic stainless steel and nickel alloy surfaces shall not be compounded from, or treated with chemical compounds containing elements in such quantities that harmful concentrations are leachable, or that they could be released by breakdown under expected environmental conditions and could contribute to intergranular cracking or stress corrosion cracking, such as those containing fluorides, chlorides, sulfur, lead, zinc, copper, and mercury.

3.6.12.4.18 Any compounds, liquids, or markers that come into contact with stainless steel surfaces shall not contain more than 200 ppm of halides or 50 ppm of chlorides.

3.6.12.4.19 VENDOR shall implement controls to ensure that there are no cross contamination effects from other metals to stainless steel, by ensuring separate storage areas and separating fabrication equipment. Controls shall be in place to ensure tools that could leave residual carbon steel deposits on the stainless steel are not used (such as, use of carbon steel wire brushes on stainless steel).

3.6.12.5 Pump Components

3.6.12.5.1 General

A. VENDOR will provide design, fabrication, lifting and examination of transfer pump base plate in accordance with interface details described in BUYER provided DPDs.
B. The transfer pump shall have provisions for crane insertion into tank risers using only one crane.
C. Special Tools: If special handling/lifting devices or tools are needed for assembly or installation/start-up of equipment, those devices shall be identified as special equipment and shall be supplied with the pump assembly including instructions for use.
D. All piping shall be designed and fabricated in accordance with ASME B31.3.

3.6.12.5.2 Pump Design

A. Transfer pump design shall be vertical bottom-suction submersible seal-less centrifugal pump capable of continuous or intermittent operation as defined on the pump data sheets.

B. The transfer pump assembly and its interfaces are shown on DPDs.

C. The depth of submergence required for pump startup and operation shall be defined on data sheets as measured from the bottom of the pump suction screen.

D. The design of the Transfer Pump shall meet the intent of API 610 or 685 as applicable to the design, or proven alternative design, except as modified and supplemented by this Specification.

E. Deleted

F. Transfer Pump design shall be configured to minimize maintenance required during operation or extended lay-up periods. All required maintenance shall be designed to be performed remotely (e.g. control signal based maintenance such as motor bumping and flushing). Transfer pumps shall be designed to require no routine "hands-on" maintenance requiring access to the pump.

G. Deleted.

H. Impeller

1. The use of semi-open impellers is considered self-draining.
2. The impeller clearance shall be pre-set and shall not require adjustment after final assembly.
3. The pump shall tolerate reverse rotation encountered during drain back and flushing or shall be provided with an anti-reverse rotation device.
4. The impeller shall be keyed, pinned, or splined to the pump shaft to prevent inadvertent loosening in the event of reverse rotation and to prevent axial movement in either direction.
5. The impeller shall be dynamically balanced in accordance with API 610.

I. Casing: The pump/motor casing, including all associated piping, shall be self-draining.

J. Pump Bearings: Submersible pump bearings shall be tank process liquid lubricated, hydrodynamic bearings. Process lubricated bearings shall be abrasion-resistant. Bearing selection and spacing shall be the responsibility of the VENDOR. Motor cooling and bearing lubrication liquid shall be discharged from the pump below the normal liquid level without causing an aerosol spray in the tank vapor space. Bearings shall be designed to tolerated dry startup.

K. The pump design shall not require external lubrication sources.

L. Risk of damage: The pump shall be designed to avoid motor or pump damage; requirements to mitigate such damage or any other pump failure risks, such as minimum operating speed and minimum tank liquid level

required shall be defined by the VENDOR. The motor shall be designed so that the operating speed does not create vibration resonance for the tank connections.

M. Pump Suction

1. The suction shall have an intake strainer with restrictive openings that will prevent entry of objects that could damage or plug any of the Transfer Pump internal direct-fluid passages.
2. Perforations shall be included on the bottom as well as the sides of the screen.
3. The screen hole pattern shall maximize open surface area to the extent practical.
4. The pump shall be capable of passing any solid materials that can enter the pump intake via the screen.

N. Water Flush Features

1. The pump shall be capable of being internally flushed through the discharge (i.e., backflushed) without causing damage to the pump.
2. Consideration shall be given to the minimization of crud traps.
3. VENDOR shall notify the BUYER of any special flushing requirements. Flushing strategies must reach all parts of the pumping system that contain waste.
4. Flushing shall be conducted with inhibited water that meets 3.6.12.4.17 and 3.6.12.4.18.
5. The minimum and maximum operating temperatures of the flush solutions are 60°F and 120°F, respectively. Higher flushing temperatures may be allowed with BUYER approval but shall not exceed a maximum temperature of 170 °F. Flushing will be prescribed every time the pump will be down for an extended period (greater than two hours) and upon pump failure.

O. Motor and Pump Vibration: The Transfer Pump assembly shall be monitored for vibration to monitor the condition of the pump for replacement planning purposes. VENDOR shall identify vibration levels that exceed design limitations and may cause damage to VENDOR or BUYER equipment. Two vibration transmitters, one for the X-axis and one for the Y-axis (the Z-axis being vertical), shall be located on the pump mounting flange. Instrumentation shall, for each channel, provide an analog current signal (4 to 20 mA) proportional to average peak vibration, and operate from 24 V DC loop power. The VENDOR shall provide the signal leads to a VENDOR-provided terminal box. Display instrumentation shall be provided by BUYER. A temporarily mounted unit shall be provided by the VENDOR to measure vibration during Transfer Pump testing. Power and instrument shall be contained within separate junction boxes.

P. Surface Decontamination Requirements: Transfer Pump components exposed to the waste tank fluid shall be designed to eliminate the collection or entrapment of fluid or sludge. All cavities shall be self-draining. Blind holes shall be plugged or machined through for drainage.

3.6.12.6 Pump Interface Definition

3.6.12.6.1 See H-16-001275 for specific interface requirements between pump assembly and CFF vessel.

3.6.12.6.2 The Transfer Pump will be installed vertically into a new radioactive waste storage tank. The Transfer Pump will be lifted and rotated from the horizontal orientation to the vertical for installation and the reverse process for removal. The largest tanks are special ASME section VIII vessels with special pump risers ending in a shielded pump pit for mounting the pump.

3.6.12.6.3 Transfer Pump components below the base plate must fit through the support structure and tank riser which will be a 24" Standard Schedule pipe.

3.6.12.6.4 During Transfer Pump removal, the Transfer Pump assembly will be lifted into a maintenance bag assembly that will allow the Transfer Pump to be sealed inside the bag. The maintenance bag assembly will be provided by the BUYER for onsite use only. Transfer Pump components above the pump flange shall be as defined on the data sheets and DPDs. Transfer Pump components that could interface with the bag shall have no sharp edges that present a potential to penetrate the bag.

3.6.12.6.5 Maximum Transfer Pump assembled and installed "wet" weight (i.e., the load placed on the tank riser) of the Transfer Pump assembly shall not exceed 10,000 lb without BUYER approval.

3.6.12.7 Pump Process

3.6.12.7.1 NPSH

Operation of the Transfer Pump will require that it is capable of performing at a wide range of tank levels and waste temperatures, and thus a wide range of Net Positive Suction Head Available (NPSHA). The pump design shall minimize NPSHR and submergence requirements. The performance requirements are defined in the pump data sheets and on the DPDs. It is recognized that it will be necessary to reduce the Transfer Pump speed as the tank level approaches the minimum.

3.6.12.7.2 Operating Speed

The Transfer Pump shall be capable of operating at a range of 30% to 100% of rated speed. Speeds unsuitable for continuous operation shall be identified.

3.6.12.7.3 Corrosion and Erosion

Allowances for corrosion and erosion shall be provided for pump components in contact with the process fluid. Refer to Table 3-5 and Table 3-7 for process fluid characteristics.

3.6.12.7.4 Maximum unrelieved discharge pressure of the pump should not exceed the design pressure of the pump assembly; pressure boundary components.

3.6.12.7.5 Radiation

Pumps shall be designed to endure radiation from nuclear waste. In addition to the design life requirements in Section 3.6.12.8.1, the lifetime integrated dose (i.e., 40 years of worst case exposure) that shall be used for design of all pump components within the scope of supply shall be $1x10^8$ rad.

3.6.12.7.6 Structural

A. Seismic Analysis
   1. The Transfer Pump assembly shall be designed to meet the seismic requirements as identified in Section 3.5.1.
   2. It is not a design requirement for the Transfer Pump to be operational following a seismic event; however, it is a design requirement for the Transfer Pump assembly to be removable from the waste tank following a seismic event.

B. Load Combinations
   1. The Transfer Pump and piping assembly shall be designed to withstand the summation of the thermal expansion loads, seismic loads, and seismic sloshing loads per ASCE 04 for SDC-3 components and ASCE 07 for SDC-1/SDC-2 components. Refer to Table 3-3.

C. Lifting Loads
   1. The transfer pump shall be designed to allow for the lifting requirements identified in Section 5.5.2.

3.6.12.7.7 Electrical

A. Electrical design shall be in accordance with the NFPA 70, National Electrical Code.
B. The Transfer Pump shall be controlled by VENDOR supplied VFD systems. (see Section 3.6.12.7.9)
C. All electrical equipment shall be listed, or labeled, by a NRTL such as Underwriters Laboratories (UL) Equipment. Equipment without a listing mark by a NRTL is not approved for use in the design, unless a NRTL category for that type of equipment does not exist. If a category for that equipment does not exist, the equipment may be approved for use only if accepted by the BUYER's Authority Having Jurisdiction.
D. VENDOR shall supply two NEMA 4 enclosure located above the pump flange, one for power and the other for instruments. The BUYER's cables shall enter through the top of these enclosures. The power distribution and instrumentation terminal blocks inside of the enclosures are the BUYER's interface point. The power terminal blocks shall accommodate parallel (250 kcmil to 500 kcmil) cables. The enclosure shall not interfere with handling of the Transfer Pump during installation and removal.

3.6.12.7.8 Motor Design

A. The motor shall be designed and rated for inverter duty and meet the applicable requirements of NEMA MG 1, Part 31.
B. Submersible pump motors shall be tank process fluid product cooled and lubricated.

C. The submersible pump electric motor shall be an induction type motor and shall not include sparking contacts.
D. Miscellaneous motor requirements:
   1. Horsepower: Responsibility of the VENDOR
   2. Motor revolutions per minute (RPM): Responsibility of the VENDOR
   3. Voltage: 460V, 3-phase (60 hertz)
   4. Insulation: Min Class F – Class H or N preferred
   5. Winding insulation voltage: 1600 V peak minimum
   6. Windings - inverter rated for variable frequency drive application
   7. Service Factor: 1.15
   8. Bearings: Product-lubricated
   9. Duty Cycle: Continuous
   10. Shaft grounding: AEGIS® SGR Split Rings
E. Motor Winding Temperature: The Transfer Pump motor windings shall be monitored for temperature during testing at the VENDOR's facility. VENDOR shall supply the Transfer Pump drive motor with internal, 3-wire, 100 ohm platinum resistance temperature detectors, or iron/Constantine ANSI type "J" thermocouples, for the purpose of obtaining the maximum winding insulation surface temperature during Transfer Pump testing.
F. Motor horsepower shall be non-overloading when operating at any point on the pump curve given the worst case fluid parameters identified in BUYER-provided data sheets.
G. Motor overheating protection for sealless canned submersible pumps: If at any time the motor surface temperature (i.e., the temperature of components in contact with process fluid) rises to 170 degrees F or more, the motor shall be designed to automatically shut-off to prevent overheating

3.6.12.7.9 Variable Frequency Drive

A. Provide a clean power 18 pulse enclosed drive.
   1. Lockable NEMA 4 Enclosure with standard finish
   2. Horsepower rating as required for the pump
   3. 460V, 3 phase, 60Hz
   4. Local HOA and start/stop switches
   5. Modbus™TCP communication
   6. Include an internal circuit breaker
B. The VFD shall be utilized during the factory acceptance testing of the new transfer pumps.
C. Provide a VFD with a Safe Torque-Off option and is SIL 2 Certified to IEC 61508
D. The VFD shall be certified by an Accredited 3rd Party with failure rates per IEC 61508.
E. The preferred product is Allen-Bradley PowerFlex 750 Series.

3.6.12.8 Functional Requirements

3.6.12.8.1 DESIGN LIFE: Transfer pumps shall be designed to last a minimum of 10 operating years and 10,000 hours continuously operating after exposure to

nuclear waste process fluid and the environment operating conditions described by this specification. This is based primarily on environment operating conditions impacting material selection for the pump bearings and seals.

3.6.12.8.2 The minimum depth of submergence required for pump startup and operation shall be 11 inches or less without introduction of flush water or back flushing prior to startup. Minimum depth of submergence required for pump startup and operation shall be defined on VENDOR data sheets as measured from the bottom of the pump suction screen.

3.6.12.8.3 There may be extended periods when the installed pumps will not be operated throughout the Transfer Pump's life. The VENDOR shall indicate the duration and frequency of recommended pump "bumping," flushing, and/or other recommended remotely operated maintenance during these idle periods to ensure that the pump is operational for as long as reasonably possible. The duration and frequency of maintenance activities shall be documented in the Final Design Review Package and the Operation and Maintenance manual(s).

3.6.12.8.4 Transfer Pump design shall be configured to minimize maintenance required during operation or extended lay-up periods. All required maintenance shall be designed to be performed remotely (e.g., control signal based maintenance such as motor bumping and flushing). Transfer pumps shall be designed to require no routine "hands-on" maintenance requiring access to the pump.

NOTE: The LAWPS facility design life is 40 years. Due to the particularly difficult tasks for which the transfer pumps are responsible and the past service life statistics for Hanford vertical transfer pumps, it is considered unrealistic to expect (and unreasonable to require) the pumps to last the 40-year facility design life. However, a 40-year design life is desired and a 40-year service life should be possible so any design features that promote a longer design life are desired

3.6.12.8.5 Self-draining: Pump design in general shall be self-draining into the tank (without damage to the pump) and shall eliminate hold up (i.e. fluid retention) of tank waste and wash solutions. Submersible motors shall be designed to prevent the ingress of waste into areas of the pump/motor that are not capable of being drained or flushed. Waste shall not be capable of reaching the motor windings.

3.6.12.8.6 Deleted

3.6.12.9 Pump Fabrication

3.6.12.9.1 The edges of metal components shall be rounded so that no sharp edges or burrs are present except where sharp edges are appropriate for pump internal design (e.g., impeller) purposes; should this exception be exercised, sharp edges shall be identified on VENDOR provided drawings.

3.6.12.9.2 The waste transfer system (piping, valves, instruments, etc.) shall be welded construction in accordance with Section 3.6.18.

3.6.12.9.3 Piping connections shall be butt-welded.

3.6.12.9.4 Welding of structural components shall be performed in accordance with AWS D1.1 or D1.6 as applicable

3.6.12.9.5 For all wetted (see Definitions) pressure retaining components: Welds shall be full penetration. Fillet welds may be used in lieu of full penetration welds with BUYER approval using an RFI.

3.6.12.10 Pump Inspections and Tests

3.6.12.10.1 Fabrication Examination

A. Visual examination of pressure piping components (i.e., sparge and flush piping), along with attachments thereto, shall be performed in accordance with Section 3.6.18.
B. All welding and associated examination shall be performed in accordance with API 685.
C. Unless otherwise specified, radiography is the preferred method of NDE and shall be specified where possible. Where it is considered impractical to perform radiographic examination due to joint configuration, VENDOR may propose UT examination for BUYER approval using the RFI process.
D. For all wetted pressure retaining components and any structural components that support wetted pressure retaining components (including the pump column assembly): Welds shall be 100% visually inspected and 100% examined by the radiography or ultrasonic (with BUYER approval) methods in accordance with API 685. If fillet welds are approved by the buyer, the liquid penetrant method may be used to examine fillet welds.
E. Surface finish visual inspection shall be performed to document compliance.
F. Nondestructive test/examinations, including visual examinations and Dimensional Verification Reports with critical dimensions verified, shall be recorded and included with the Final Data Package.

3.6.12.10.2 The VFD shall be factory tested in accordance with the latest version of UL and NEMA standards. Include test reports with the pump acceptance tests. The VFD VENDOR shall provide and document on a test report a burn in for all sub-assemblies. A final burn in with a motor load shall be performed and documented on a test report during pump testing.

3.6.12.10.3 Tank Pump-Out Test

With the fully assembled transfer pump operating at its rated performance point, the water in the test pit shall be continuously lowered until the transfer pump breaks suction. The water temperature, test pit liquid level, and the

elevation above the bottom of the pump where loss of suction occurs shall be recorded.

ACCEPTANCE CRITERIA: Pump shall be proven capable of meeting the rated pump-out height specified by VENDOR. Rated pump-out height is subject to review and approval by BUYER.

3.6.12.10.4 Pump Minimum Submergence Startup Test

With the fully assembled transfer pump intake located at the rated minimum submergence depth, the pump shall be started to verify that the pump will startup and meet the performance requirements identified on BUYER-provided pump data sheets.

ACCEPTANCE CRITERIA: Pump shall startup and operate at or below the rated minimum submergence depth, without damage, and continue to operate for a period of at least 1 minute without any disruption to pump discharge flow.

3.6.12.10.5 Motor Overheating Protection Test

Motors shall be designed to automatically shut off prior to overheating. The temperature of the motor shall be brought to the designated overheating temperature to confirm that the pump will automatically shut off.

ACCEPTANCE CRITERIA: Pump must shut off at or below the designated overheating temperature. For sealless canned submersible pumps, this temperature is 170 degrees F.

3.6.12.10.6 Pump Motor Megger Test

A pump motor megger test shall be conducted in accordance with ANSI/IEEE Standard 43, IEEE Recommended Practice For Testing Insulation Resistance Of Rotating Machinery and Section 3.6.21.3.4 C. The megger test shall be conducted between each phase and the ground at 500 V direct current. Continuity between the phases shall be recorded. All megger and continuity test results shall be documented and submitted for approval.

ACCEPTANCE CRITERIA: Acceptable values are greater than or equal to the values stated in IEEE Standard 43.

3.6.12.10.7 Pump Cleaning

The cleaning section of the Packaging, Storage, Shipping, and Handling (PSSH) shall include, at a minimum, the following:

A. After Non-Destructive Examination (NDE) is complete and before connecting system into existing systems, clean internal surfaces mechanically or by water flushing.

B. Furnish equipment required to perform flushing and testing.

C. Mechanical Cleaning: Remove loose dirt, scale, and debris by brushing, wiping, water jetting, or other mechanical method approved by the BUYER until there is no visible dirt, scale, or debris.

D. Water flushing:

1. Flush piping with water for 2 minutes minimum, and until effluent is clean and contains no visible particulate matter. Flushing pressure shall not exceed maximum operating pressure specified in applicable pipe design codes. Flushing water supply shall have sufficient capacity to produce a flow velocity of 4 to 6 ft/s in largest pipe size, with pipe full.
2. Remove all water and temporarily cover the nozzles with plastic chloride free caps or temporary flanges.
3. Any water flushing by VENDOR during fabrication or testing shall be conducted with inhibited water.

E. Provide documented evidence that flushing or mechanical cleaning has been accomplished as specified in this section.

3.6.12.10.8 Factory Acceptance Testing

A. Factory Acceptance Test Procedures
1. Factory Acceptance Test (FAT) procedures describing the method, setup, and layout identifying pressure boundaries and any test equipment (including instrumentation and measurement tools) required for the tests specified herein shall be prepared by the VENDOR and submitted to the BUYER. The BUYER reserves the right to witness testing.
2. The VENDOR shall notify the BUYER at least 10 working days in advance of testing. The tests shall be performed using the VFD(s) and motors that are to be furnished with the pump assembly.
3. Calibrated measurement and test equipment (M&TE) shall be used. VENDOR shall submit M&TE procedures with the FAT procedures. Calibration records shall be made available upon request of the BUYER.
4. The results of testing shall be documented either in individual reports or as a single report organized by test type. Final factory acceptance test reports shall be provided for approval and included as a part of the Final Data Package.

B. Hydrostatic Testing
1. All waste process pressure retaining components shall be pressure tested to ensure leak tightness in accordance with ASME B31.3, paragraph 345. If hydrostatically tested, the test pressure shall be at least 1.5 times the specified design pressure. If pneumatically tested, the test pressure shall be 110% of the specified design pressure.
2. ACCEPTANCE CRITERIA: There shall be no visible leakage throughout any pressure tests.

C. Hydraulic Performance Testing

1. Performance testing as described in this section shall be performed twice: one test set before the run-in test and one test set after the run-in test. All data, calculations, and records required in this section shall be provided for both test sets. The intention of the second test set is to prove that the pump run-in has not degraded the performance of the pump and help validate the quality and reliability of the pump.
   ACCEPTANCE CRITERIA: Acceptance criteria used for both test sets (before and after run-in test) shall be Acceptance Grade 1B per ANSI/HI 11.6 Table 11.6.5.4 and ANSI/HI 14.6 Table 14.6.3.4.
2. Each pump shall be tested for hydraulic performance in accordance with ANSI/HI 11.6 Section 11.6.5 for submersible (i.e. close-coupled) pumps and ANSI/HI 14.6 Appendix E for vertical turbine pumps.
3. The performance test shall obtain sufficient data, including rated performance point and run-out, to plot a full performance curve at the rated speed. The following shall be recorded and/or calculated during or after the test:
   a. Flow rate
   b. Total head
   c. NPSHR
   d. Brake horsepower (bhp)
   e. Electrical power input
   f. Pump efficiency
   g. Actual speed (rpm)
   h. Motor amperage and voltage (one each phase)
   i. Pump vibration
   j. Impeller type and size
   k. Number of stages
   l. Impeller setting (if applicable)
   m. Submergence depth at the beginning and end of each test (NOTE: This depth should be held constant during each test)
   n. Vibration data throughout all performance testing
4. The pump shall be tested over a range of operating speeds in 10% increments, from the minimum allowable speed to 100% of pump rated speed. However, no less than 8 speed increments shall be tested.
5. Pump motor assemblies controlled by a variable frequency drive shall be tested to identify speeds suitable for continuous operation (critical speeds) of the assembly up to a minimum of 110% of the rated speed of the pump.
6. After completion of testing and sufficient data has been collected, the Seller shall prepare a certified correct pump curve reflecting pump performance at the discharge nozzle with water. Information shall include:
   a. Impeller type and size
   b. Number of stages
   c. Head vs flow
   d. bhp @ maximum specific gravity

e. Pump efficiency
f. NPSHR
g. High- and low-end allowable operating regions
h. Any limitations of operation

7. Performance curves shall be plotted for operating speeds at 100 rpm increments or less.
8. A detailed drawing of the test set-up shall be included with the test documentation identifying pipe length, fitting location and size, instrument location, elevations, test tank dimensions, liquid level, and pump position.

D. Lift Tests

1. Deleted

2. Vertical Orientation Lift Test: The VENDOR shall demonstrate lifting the transfer pump from horizontal to vertical orientation using only one crane. The VENDOR shall prove vertical orientation of the Transfer Pump via direct measurement made to the outside of the assembly when held vertically by a single crane. The complete transfer pump assembly shall hang true vertical end to end. During the lift test, the deflection of the pump shall be monitored to evaluate if pump damage occurs, or is likely to occur, when lifted in accordance with the VENDOR's lift procedure. The VENDOR shall document the test results. Counterweights, if required to achieve vertical straightness, may be used with BUYER approval. Submit the design and extent of counterweights, if required.

   ACCEPTANCE CRITERIA: Test must be completed without damage to any transfer pump components within the scope of supply. The complete transfer pump assembly shall be proven to hang true vertical end to end when measured at the suction inlet.

3. Insertion Lift Test: The VENDOR shall demonstrate the transfer pump assembly can be remotely inserted using a single crane into a tank riser and completely onto the riser flange without interference with the riser inside diameter and without any hands-on guidance at the tank riser (due to radiation exposure concerns at the tank riser). The mock-up of the tank riser shall consist of a 10 foot long section of 24 inch standard schedule pipe using any stainless steel.

   ACCEPTANCE CRITERIA: Test must be completed without damage to any transfer pump components within the scope of supply.

4. Removal Lift and Laydown Test: After completion of the Insertion Lift Test described above, the VENDOR shall demonstrate the transfer pump assembly can be removed from a tank riser, rotated to the horizontal position, and placed in the pump transport

container using only one crane. Any plastic wrap may be used to simulate the containment bag.

ACCEPTANCE CRITERIA: Test must be completed without damage to any transfer pump components within the scope of supply.

E. In Tank Pump motor Inspection and testing

Complete the manufacture's standard tests to ensure a high quality machine suitable for the intended application.

1. Motors shall be given routine tests per NEMA MG-1. VENDOR shall forward certified copies of these tests to the BUYER. As a minimum, these test shall include:
   - Determination of locked-rotor current
   - Measurement of no-load running current
   - Measurement of winding resistance
   - High-potential test
   - Motor rotation
2. Motor/vibration measured on any NEMA size motor shall stay within the limits outlined in NEMA MG-1

F. Run-In Test

1. Transfer pumps shall be subjected to run-in tests of at least 96 hours continuous duration at the VENDOR's facility prior to shipment to the BUYER distributed as follows:
   a. Run-in Test #1: 24 hours continuous duration at maximum pump capacity
   b. Run-in Test #2: 24 hours continuous duration at minimum pump capacity
   c. Run-in Test #3: 48 hours continuous duration at nominal pump capacity
2. Installation of the pump to the test setup must be witnessed by the Buyer to confirm that no undocumented steps, outside or standard installation procedure, are necessary.
3. The start and end of each run-in test period must be witnessed by the Buyer.
4. The entire run-in test shall be recorded on video. The video shall include some form of visual indication that the pump is operating (e.g. show fluid discharge, pump control monitors shown in the foreground, etc.).
5. Vibration data shall be recorded throughout all run-in testing.
6. ACCEPTANCE CRITERIA: Pump shall continue to operate without failure or hands-on maintenance of any kind continuously for each run-in test period. In the event of an error, fault, or interruption of some kind, the error must be corrected and the full run-in test period must be restarted from the beginning.

G. Hold Points

Table 3-8 Pump Fabrication Traveler Hold Points provides the minimum hold points to be incorporated into the fabrication traveler.

Table 3-8 Pump Fabrication Traveler Hold Points

Prior to start of fabrication	Hold
Prior to the first production weld for each weld procedure	Hold
Prior to NDE Inspection	Witness
Prior to Hydrostatic/Leak Test	Witness
Prior to Hydraulic Test	Witness
Prior to Pump installation in Test Setup	Witness
Prior to Pump Sealing System Leak Check	Witness
Prior to Tank Pump-Out Test	Witness
Prior to Pump Minimum Submergence Startup Test	Witness
Prior to Motor Overheating Protection Test	Witness
Prior to Pump Motor Megger Test	Witness
Prior to Lift Tests	Witness
Prior to Run-in Test	Witness
Prior to Final Inspection	Hold
Prior to Shipping	Hold

3.6.13 ASME Process Vessels Fabrication (CFF,FFT, and Backpulse Tank)

3.6.13.1 Vessel General

3.6.13.1.1 VENDOR shall substantiate any proposed changes to the MDSs, DPDs, specifications, and purchase order, and obtain approval from BUYER.

3.6.13.1.2 Unless otherwise specified, all vessels shall be designed and fabricated in accordance with ASME Section VIII, Division 1, requirements of this specification, the MDSs, DPDs, and the referenced drawings provided in the Contract.

3.6.13.1.3 Where defined on the MDSs or DPDs, pressure vessels shall be U stamped and registered in accordance with the National Board Inspection Code (NBIC) (NBBI NB23). VENDOR shall provide U-1 Form as a deliverable.

3.6.13.1.4 VENDOR shall consider design details, dimensions and material thickness shown on DPDs and MDSs as reference information. VENDOR shall provide design and specify applicable materials, dimensions, and thicknesses as required to meet code requirements.

3.6.13.1.5 If the MDSs or DPDs contain an equipment cyclic data, VENDOR shall provide a fatigue evaluation in accordance with ASME Section VIII Division 1 UG-22.

3.6.13.1.6 Unless indicated otherwise on the MDSs or DPDs, VENDOR shall design the vessels to support process liquid filled to the top of the overflow. If no overflow is identified the vessel shall be assumed completely full. VENDOR shall utilize the process liquid density as stated on the MDSs or DPDs.

3.6.13.1.7 VENDOR is to confirm that the vessel internal piping and supports account for the loads imposed by the agitation of the process fluid. The design shall

consider the loads with respect to excessive vibration which may cause premature failure of the vessel pressure boundary or internal supports.

3.6.13.1.8 VENDOR shall provide vessel supports as illustrated on the DPDs. For lug supported vessels, locally increasing the thickness of the shell or head with an insert plate may be required to comply with loading.

3.6.13.1.9 All welding shall be continuous. Stitch welding is prohibited.

3.6.13.1.10 Where practical, internal structural component welds shall be full penetration. All fillet welded attachments are subject to approval by BUYER thru the submittal of design and fabrication drawings.

3.6.13.1.11 All internal and external supports, support rings, pads, and structural brackets attached to the vessel shall be seal welded all around to prevent corrosion between the vessel and attachments. When seal welding all around is not practical, provision for drainage shall be made: e.g., a gap in the low- point weld and the proposed design submitted to BUYER for approval. These welds shall be included in the weld map.

3.6.13.1.12 Pulled bends shall be specified in preference to using piping fittings; piping bends shall have a minimum bend radius of five times the piping diameter unless specified otherwise.Where 5D pipe bends are not practical, VENDOR may submit for approval, use of 3D bends or long-radius pipe fittings

3.6.13.1.13 Vessel plate materials to have a 2B surface finish per ASTM A480.

3.6.13.2 Vessel Nozzles and Manways

3.6.13.2.1 At a minimum, nozzle wall thickness shall be per ASME Section VIII, Division 1, unless a greater thickness is specified on the DPDs. VENDOR shall understand that minimum nozzle thicknesses indicated on the DPDs may not support the nozzle loading requirements specified on the MDSs or DPDs and shall increase nozzle wall thickness or provide recommended design changes to meet the nozzle loading specified on the MDSs or DPDs.

3.6.13.2.2 Nozzles, manways and their reinforcements located on the head shall be located fully within the crown region of the head unless noted otherwise on the DPDs. Figures Figure 3-17 Acceptable Nozzle Connections and Figure 3-18: Unacceptable Nozzle Connections illustrate acceptable and unacceptable configurations and welding for pressure vessel shells and heads.

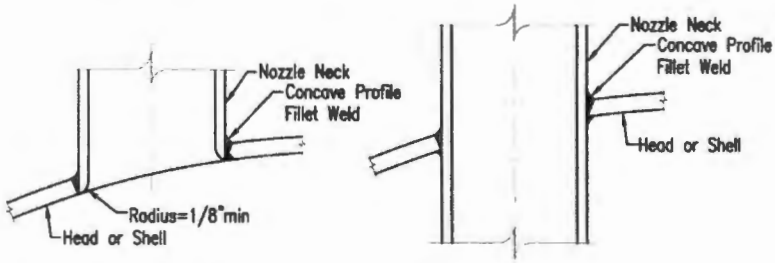

Set-In Nozzle with Full Penetration Weld for Fatigue Service

Through Nozzle for Fatigue Service

Figure 3-17 Acceptable Nozzle Connections

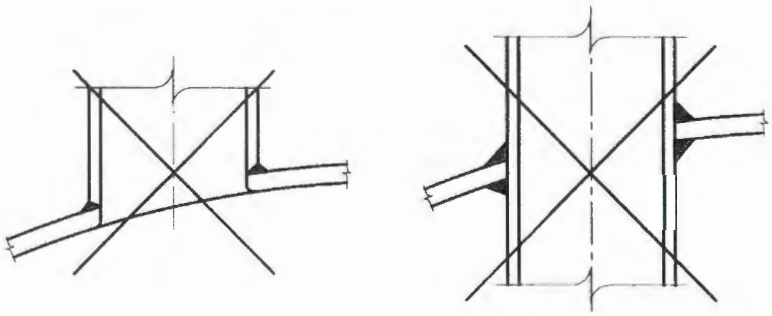

Set-on Nozzle with Full Penetration Weld

Through Nozzle with Double Fillet Weld

Figure 3-18: Unacceptable Nozzle Connections

3.6.13.2.3 All nozzles shall be set-in type or through type with full penetration welds as shown in Figure 3-17 Acceptable Nozzle Connections. All nozzles that are flush with the inside surface of the vessel shall be rounded to 1/8 inch minimum radius as shown.

3.6.13.2.4 Nozzles for pressure relief devices, vents, and drainage shall be flush with the inside surface of the vessel. Nozzles with internal projection in primary containment shall have an additional fillet weld between the internal projection and the inside surface of the shell or head.

3.6.13.2.5 Flange bolt holes shall straddle natural vessel centerlines unless otherwise specified.

3.6.13.2.6 The minimum nozzle design loads by nozzle size, for operating loads, weight, seismic and thermal expansion cases are as specified in the MDSs or DPDs. Loads act at the juncture of the nozzle and shell.

3.6.13.2.7 Equipment nozzle loads, where applicable, will be provided by BUYER after award. Primary nozzle load combinations to be considered in the design shall be:

- Weight + Seismic + Operating Pressure + Operating Loads

Secondary nozzle load combinations to be considered in the design shall be:

- Primary Loads + Thermal

3.6.13.2.8 Unless otherwise identified, the design loads specified in the MDSs or DPDs represent the minimum loads to be used for nozzle design.

3.6.13.2.9 VENDOR shall design nozzles according to the methods of WRC 297 & WRC-537, or BUYER approved analysis as requested in an RFI.

3.6.13.2.10 The nozzle loads specified in the MDSs or DPDs are for the piping connected to the external nozzle. If a nozzle is loaded internally to the vessel, whether due to operating loads or seismically induced fluid loads, design the nozzle for the sum of the internal and external loads.

3.6.13.2.11 If the wall thickness of the nozzle neck is greater than that of the connecting piping, the requirements of ASME Section VIII, Division 1, Figure UW 13.4 shall be satisfied.

3.6.13.3 Vessel Nozzle Reinforcement

3.6.13.3.1 All nozzle reinforcement shall be integral, as shown in Figure 3-19 regardless of Quality Level.

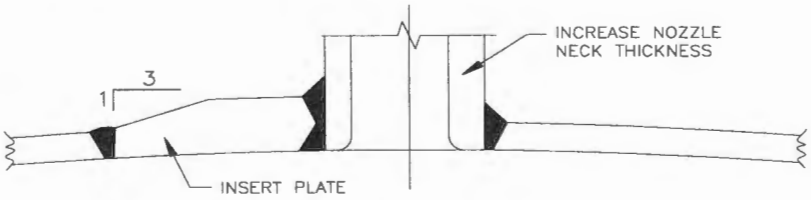

Figure 3-19: Integral Nozzle Reinforcement Methods (For FQA & EQA Fabrication)

3.6.13.4 Vessel Internal Components

3.6.13.4.1 Design of support members for vessel internals shall be the responsibility of VENDOR. Internal supports shall use welded connections exclusively; no bolted connections.

3.6.13.4.2 VENDOR shall submit a preliminary layout for review prior to detail design for internal equipment and piping, including proposed support methods.

3.6.13.4.3 Design of internal components such as wash rings, sparge nozzles, stilling wells, thermowells, etc. shall consider agitation loads on vessels with mixing systems. The design of internal supports shall also consider stresses caused by differential thermal expansion, seismic loads, and horizontal transportation of the vessel. The nozzles and internals shall be analyzed for effectiveness of design. The MDSs or DPDs will define agitation requirements.

3.6.13.4.4 VENDOR shall design support members to avoid the column of space directly below the manway or inspection nozzle, instrumentation nozzles and equipment nozzles. The support design shall also provide adequate clearance from operating equipment such as agitators and pumps.

3.6.13.4.5 VENDOR to determine if internal surface of the head or shell subjected to direct impingement of process fluid requires a wear plate or other means of protection. If used, wear plates shall be of a material compatible with the shell or head.

3.6.13.4.6 VENDOR shall apply corrosion/erosion allowance to both internal and external surfaces of internal components and piping as defined on the MDSs or DPDs.

3.6.13.5 Vessel External Components

3.6.13.5.1 Lifting and tailing lugs shall be provided and installed by VENDOR unless noted otherwise on DPDs.

3.6.13.5.2 Deleted

3.6.13.5.3 VENDOR is responsible for determining the necessity of stiffening rings per ASME Section VIII. Div.1, Part UG-29. The material shall match the material of the shell and attachment welds shall be continuous on both sides of the ring.

3.6.13.5.4 The materials welded to the shell shall match the material of the shell.

3.6.13.6 Vessel Seismic Design

3.6.13.6.1 The seismic design loads and acceptance criteria for the vessels, anchorage, and internal supports shall be correlated to the requirements in Section 3.6.22, as applicable to each component. Safety Designations are defined on the MDSs or DPDs.

3.6.13.6.2 The seismic design shall include impulsive and convective fluid induced loads using an appropriate method such as that provided in ASCE 4-98.

3.6.13.6.3 Vessel nozzles shall be designed for the seismic loads specified in the MDSs or DPDs in accordance with the vessel classification.

3.6.13.7 Vessel Fabrication

3.6.13.7.1 General

A. VENDOR shall, if necessary, provide temporary stiffening and jigging to prevent shell distortion during fabrication, welding processes, heat treatment, hydrostatic testing, and shipping. Temporary stiffening and jigging not required for shipping shall be removed before shipping. For stiffening and jigging that is welded in place, remove by grinding and perform NDE in accordance with fabrication NDE requirements.

B. Fabrication tolerances shall be in accordance with ASME Section VIII, Division 1, the Vessel DPDs, BUYER vessel standard details and any other applicable drawing defined in the contract documents.

C. The sequence of fabrication shall be planned to permit maximum access to the internal surfaces to enable examination of all welds.

D. Plates and pipes shall be cut to size and shape by machining, grinding, shearing, plasma, laser, or water jet cutting. Plates, 3/8 inch thick and above, cut by shearing, shall either be liquid penetrant tested on the sheared edge or have 3/8 inch allowance left on the edges which shall be removed by machining or grinding. All thickness of plate or pipe cut by air plasma cutting shall have the edges dressed to a smooth, bright finish.

Material cut by the inert gas shielded plasma, laser or water jet process will not require further dressing other than de-burring. All lubricants, burrs, and debris shall be removed after cutting.

E. All stamps used for identification reference markings shall be of the low stress type. Stampings shall not be located near discontinuities.

F. If a butt welded seam is required between materials of different thickness, the thicker material shall be machined or ground on the side away from the process liquid. Machining shall ensure a smooth finished profile with no sharp corners and shall be in accordance with ASME Section VIII, Division 1.

G. When rolling any austenitic stainless plate, care shall be taken to prevent carbon pickup or contamination of rolled material. The work area shall be free of carbon steel grindings and general cleanliness shall be maintained to preclude carbon contamination.

H. Only stainless steel brushes, clean iron-free sand, ceramic or stainless steel grit shall be used for cleaning stainless steel or nonferrous alloy surfaces. Cleaning tools or materials shall not have been previously used on carbon steel.

I. Pipe bending methods, tolerances, processes, and material requirements shall comply with Pipe Fabrication Institute (PFI) Standard ES-24 and require BUYER's approval. These requirements shall apply equally to tube bending processes. The pipe shall not be terminated or butt welded within the bend; a straight length of 6 inches is recommended.

J. All temporary attachments shall be removed prior to shop hydrostatic test unless specifically approved by BUYER.

K. Impact testing shall be performed on base metal and weld joints in accordance with ASME Section VIII as applicable.

3.6.13.7.2 Layout Requirements

A. Plate size shall be chosen to minimize welding. For horizontal vessels, the longitudinal seams in cylindrical shells and conical heads shall be located above the specified normal operating level, where practical. Longitudinal seams shall be completed before welding any adjoining circumferential seam.

B. The longitudinal seams of adjacent shell courses shall be staggered by a minimum length (measured from the toe of the welds) of 5 times the plate thickness, or 4 inches whichever is greater. Where it is considered impractical to meet this requirement, VENDOR shall submit a proposed layout to BUYER for approval.

C. Special attention must be paid to large diameter formed heads, where two or more plates are butt welded prior to forming. Butt welds shall be located such that the weld in the knuckle region is minimized. VENDOR shall submit complete weldment details of large diameter formed heads to BUYER for approval.

D. Plate layouts shall be arranged so that longitudinal and circumferential weld seams clear all nozzles, manways, and their limits of reinforcement. Additionally there must be a clearance of at least eight times the shell plate thickness between the toes of the affected welds. Any exception to this requirement will require BUYER's approval.

E. Structural attachment welds such as internal support rings or clips, external stiffening rings, insulation support rings, and ladder, platform or pipe support clips shall clear weld seams by a minimum of 2 inches. If overlap of pad type structural attachments and weld seams is unavoidable, the portion of the seam to be covered shall be ground flush and examined by radiography before the attachment is welded. The seam shall be radiographed per ASME Section VIII, Division 1, Part UW-51 for a minimum distance of 2 inches beyond the edge of the overlapping attachment. Radiographic examination of longitudinal weld seams is not required when single plate edge type attachments such as tray support rings, stiffening rings, insulation support rings, ladder, platform, or pipe support clips cross such weld seams.

3.6.13.7.3 Nozzles and Manways

A. For forged nozzles connecting to pipe of lesser wall thickness, VENDOR shall prepare the nozzles per ASME Section VIII, Division 1 Figure UW-13.4.

B. For shell openings specified with a welded cover (i.e. – manways or inspection nozzles), the cover shall be tack welded to the manway neck, prepared for field welding to the manway neck and sealed to prevent dirt and water from entering the vessel using adhesive tape which meets the requirements of Section 3.6.1, Parts/Materials/Processes. The cover shall be marked with the plant item number of the vessel.

C. Nozzles to be butt welded in the field shall be suitably extended and capped for hydrostatic testing. After testing, the caps shall be removed and the nozzle shall be prepared for field welding. The finished length shall be as stated on the DPDs.

3.6.13.7.4 Welding Requirements

A. All welds, including those for non-pressure parts and attachments, including temporary attachments, welded to pressure boundary components, shall be made by welders, welding operators, and welding procedures qualified under the provisions of ASME Boiler and Pressure Vessel (BPVC) Code, Section IX. The responsibility for welding to be used in ASME Code construction rests with VENDOR.

B. VENDOR's responsibility includes the following documents which shall be available for use by the welders/welding operators and for reference by BUYER:

1. Selecting and preparing the Welding Procedure Specification(s) (WPS) suitable to the need.

2. Preparing and providing a PQR documenting proof of the weld ability of the variables described in the WPS.
3. Preparing and providing a Welder Performance Qualification (WPQ) documenting proof of the welder's ability to deposit sound weld metal within the range of WPS parameters being used.
4. Welder Qualification Continuity log.

C. All weld joints for pressure retaining applications shall have a minimum of two passes.

D. Where joints are welded from both sides, the first pass shall be backchipped, ground or arc-gouged to sound metal before welding the second side. This requirement shall be stated on the WPS.

E. Peening shall not be used. The use of pneumatic tools for slag removal is not considered peening.

F. Each layer shall be completed prior to starting the next layer (no block welding).

G. Vertical welding shall be vertical up unless approved otherwise by BUYER for each specific application.

H. For clad (or weld overlaid) plate, the following limitations apply:

1. The cladding shall be stripped back a minimum of 1/4 inch from the edge of base material bevels by machining or grinding, not by flame or arc gouging. The removal shall not reduce the base material thickness below the design thickness. The method of verifying complete removal from this area shall be submitted for review.
2. Overlay weld metal shall not be used for joining base metals to each other. Local repair cavities in overlay deposits that penetrate into the base material more than 10 percent of its thickness or 3/16 inch, whichever is less, shall have the base material re-welded with welding materials having properties consistent with the base material before completing the overlay repair.
3. Deleted.

I. All attachments such as lugs, brackets, nozzles, pads and reinforcements around openings and other members (when permitted) shall follow the contour and shape of the surface to which they will be attached. The gap at all exposed edges to be welded shall not exceed the greater of 1/16 inch or one-twentieth of the thickness of the attachment at the point of attachment.

J. Joints shall be assembled and retained in position for welding. The use of manipulators or other devices to permit welding in the flat position should be employed where practical.

K. Temporary welds including tack welds shall be made by qualified welders using qualified weld procedures.

L. All low alloy, stainless steel alloy and nickel alloy welds shall be back purged with Argon. The purge shall be maintained until three layers or

3/16 inch of deposit has been welded. Purging applies to vessel shell and all piping butt welds, fillet welds and temporary attachments. Sufficiency of purge shall be verified by measuring Oxygen concentration prior to welding.

M. Misalignment (high-low) in butt joints shall conform to the applicable ASME Code requirements. Bridging is prohibited.

N. When welds are overlaid, each layer and the adjacent metal shall be cleaned to remove all surface discoloration prior to deposition of the next bead. The final weld surface may have intermittent, iridescent straw-colored oxides. This requirement also applies to the addition of Stellite alloy to the Vessel interior. Stellite overlays if required will be defined on the DPDs. Overlay and cladding procedures are to be approved per ASME PVBC part UCL.

3.6.13.7.5 Welding Process Limitations

A. Root Pass of Single Side Butt Welds Without Backing (Open Butt). Only the following welding processes may be used and are subject to the limitations listed.
   1. Shielded Metal Arc Welding (SMAW)
      a. Deleted
      b. Impact test temperature not less than -20°F (as applicable)
   2. Gas Tungsten Arc Welding (GTAW)
      a. Back purge three layers minimum for 2-1/4 Cr -1 Mo alloys and higher
      b. Gas Tungsten Arc root passes for 2-1/4 Cr-1 Mo alloys and higher
   3. Gas Metal Arc Welding (GMAW)
      a. Only pulsed spray or spray transfer may be used
      b. GMAW short arc is prohibited

B. All Welding Except Root Passes for Open Butt. Only the following welding processes may be used and are subject to the limitations listed.
   1. Shielded Metal Arc Welding (SMAW)
      a. Filler metal number F1 are not permissible for pressure retaining welds.
      b. Deleted
      c. Filler metal numbers F4 is permitted for all welds.
   2. Gas Tungsten Arc Welding
      a. Addition of filler metal is required (dry washing is prohibited)
   3. Gas Metal Arc Welding
      a. GMAW-P — Pulsed axial spray transfer — No Limitations.
      b. Continuous spray transfer — No Limitations.
      c. For nominal pipe sizes (NPS) less than 6 inch, wherever possible all shop welding shall be rotated.
   4. Flux Cored Arc Welding (FCAW)
      a. Arc shielding gas is required for pressure retaining welds.
      b. Self-shielding FCAW consumables are prohibited.
   5. Submerged Arc Welding (SAW)
      a. Neutral flux (no active or alloy constituents) is required.
      b. Run on/run off tabs shall be used where possible.

c. Unfuzed used fluxes shall not be reused.

3.6.13.7.6 Preheat and Interpass Temperatures

A. Preheat temperature shall be in accordance with the applicable Codes except that Code recommended minimum preheat temperatures shall be mandatory. Preheat requirements shall apply to all welding, including tack welding and welding of temporary attachments. Preheat requirements also apply to all thermal gouging and cutting operations. Preheat shall be maintained a minimum of 3 inches on either side of the joint.

B. For welds requiring preheating, the weld joint shall be completed with no intermediate cooling. Cooling under an insulating blanket is permitted provided that at least 30 percent of the joint depth has been filled and that applicable documents do not specify more stringent requirements.

C. The interpass temperature for austenitic stainless steels and nickel base alloys shall not exceed 350°F, or lower if as defined by welding rod manufacturer, except that for the hard facing of low carbon austenitic stainless steels, the interpass temperature shall not exceed 800°F.

D. Preheat shall be determined by temperature indicating crayons, contact pyrometers or other equally suitable means. Temperature indicating crayons used on austenitic stainless steels and nickel base alloys shall not cause corrosive or other harmful effects. It is VENDOR's responsibility to determine suitable brands that may be used. This information shall be made available to BUYER's representative if requested.

E. If oxy-fuel torches are used for preheating, the torch tip shall be appropriate for the work (i.e., a "rosebud," not a cutting or welding tip).

3.6.13.7.7 Post Weld Heat Treatment (PWHT)

A. Direct impingement by furnace burner flames is not permitted.

B. Only resistance, induction, furnace, or quartz lamp heating methods are permitted. Exothermic heat treatment shall require prior written authorization by BUYER.

C. When local PWHT is performed, all attachment areas, including areas from which attachments have been removed, shall be included.

3.6.13.8 Vessel Shop Quality Control

3.6.13.8.1 General Requirements

A. Each layer of welding shall be smooth and free of slag inclusions, porosity, excessive undercut, cracks and lack of fusion prior to beginning the next layer. In addition, the final weld layer shall be free of coarse ripples, non-uniform bead patterns, high crown, and deep ridges to permit the performance of any required inspection. All arc strikes, starts, and stops shall be confined to the welding groove or shall be removed by grinding. Welds containing cracks shall be locally repaired.

B. Temporary attachments shall be removed and areas finished smooth with the vessel shell. NDE, in addition to visual examination, shall be performed to ensure no cracks have been generated.

C. The test for maximum hardness of the deposited weld metal, if required, shall be made after any required heat treatment. If the weld fails to meet the acceptance criteria and either of two subsequent adjacent tests exceeds the specified hardness, the weld shall either be replaced or reheat treated and retested. The hardness requirement applies to the weld metal exposed to the process fluid. When not accessible, the opposite side shall be tested. Hardness readings shall be taken with a portable tester in accordance with ASTM A370.

D. Each weld shall be stamped with the welder's unique symbol or number identification using low stress stamps. Any alternative method of marking shall be submitted for BUYER approval.

3.6.13.8.2 Hold Points

A. VENDOR shall provide required notifications of verification points and shall not proceed past required hold points without written authorization from BUYER QA Representative. Table 3-9 Vessel Fabrication Traveler Hold Points lists the minimum hold points to be incorporated into the fabrication traveler.

Table 3-9 Vessel Fabrication Traveler Hold Points

Prior to the first production weld for each weld procedure	Hold
Prior to NDE Inspection	Witness
Prior to Hydrostatic/Leak Test	Witness
Prior to Load Test	Witness
Prior to Final Inspection	Hold
Prior to Shipping	Hold

3.6.13.8.3 Shop Inspection General

A. The shell and head sections which are subjected to concentrated or large loads through welded attachments (such as lifting and tailing lugs) shall be ultrasonically examined over 100% of the area prior to welding, in accordance with the following:

1. For connections or attachments directly welded to the shell or head, the area tested shall extend 3 inches beyond the extremity of the proposed weldment
2. For connections or attachments welded via a reinforcement or doubler plate, the shell area tested shall extend 5 inches beyond each side of the perimeter of the proposed fillet weld attaching the reinforcing or doubler plate to the shell or head

B. All full penetration welds attaching internal or external structural components to the heads or shell shall be ultrasonically tested. If fillet

welds are permitted by BUYER, they may be dye-penetrant tested with approval from BUYER.

C. All full penetration welds forming part of the jacket shall be ultrasonically tested. Records of the NDE and other tests shall be submitted to BUYER.

D. All welds joining the nozzle neck to the shell or heads, that are not radiographed or ultrasonically tested shall be liquid penetrant tested.

3.6.13.8.4 Shop Inspection for FQA and EQA Quality Level Vessels

A. In addition to the general inspection requirements, FQA and EQA vessels shall be inspected as specified in this section.

B. Radiography is the preferred method of Nondestructive Examination (NDE) and shall be specified where possible. Where it is considered impractical to perform radiographic examination due to joint configuration, VENDOR may propose ultrasonic examinations for buyer approval.

C. The following welds shall be subject to NDE as specified:

1. All welds forming part of the primary containment, including weldments joining nozzles to the vessel shell or head shall be 100% inspected using radiography.
2. Where a main seam butt weld is located such that only part of its length lies within the Primary Containment, the complete length of that particular seam shall be inspected.
3. For multi-chambered vessels, where an adjacent chamber is categorized other than FQA or EQA, all interconnecting butt welds which provide Primary Containment between the two chambers shall be inspected to FQA and EQA requirements.
4. For vessels fitted with a shell-type jacket, all Primary Containment welds in the main shell enclosed by the jacket shall be inspected and found satisfactory prior to fitting the jacket and associated rings.

D. All butt welds in internal piping shall be 100% volumetrically inspected.

E. Where components attach to any part of the vessel by full or partial penetration tee weld (including a corner weld), the parent plate in the vicinity of the weld shall be ultrasonically tested prior to welding, to ensure that no defects are present that could result in laminar type tearing during welding.

F. The following component welds shall be ultrasonically examined:

1. Supports for vessel internals
2. Vessel supports where a small local area of the vessel takes the support load (Ultrasonic Inspection is not required for skirt or ring supported vessels).

3.6.13.8.5 Non-Destructive Examinations

A. Radiography, ultrasonic testing, and liquid penetrant examination, where specified or required, shall be performed in accordance with ASME Section VIII, Division 1 and ASME Section V. NDE procedures shall be submitted to BUYER for review and approval prior to fabrication.

B. All mandatory nondestructive examination (visual, surface flaw and volumetric) of vessel shall be carried out after the completion of fabrication, including any heat treatment.

C. Visual weld inspections shall be performed by certified weld inspectors.

D. Ultrasonic testing, where specified by BUYER or proposed by VENDOR, shall be in accordance with Appendix 12 of ASME Section VIII, Division 1.

E. Radiographic acceptance criteria shall be in accordance with ASME Section VIII, Division 1, Paragraph UW-51 where full radiography is required or UW-52 where spot radiography is required.

3.6.13.8.6 Hardness Testing For Austenitic Stainless Steel

A. Hardness testing is required when austenitic stainless steel plate is cold formed to make sections such as angles and channels. This requirement is not applicable to the cold forming of dished heads, which is covered by the relevant section of ASME Section VIII, Division 1.

B. Hardness testing is required when austenitic stainless steel pipe is cold formed for bends with a centerline radius less than three times the nominal pipe diameter.

C. Any cold forming process, which may significantly increase hardness, shall be in accordance with an approved procedure, which contains hardness testing. The procedure shall be submitted for BUYER's approval.

D. Hardness testing shall be performed on areas subject to the greatest deformation after cold working or any rework or rectification; the maximum permitted hardness shall not exceed that allowed by the applicable material standard and grade.

E. If the maximum permitted hardness is exceeded, VENDOR shall perform PWHT per Section 3.6.13.7.7, Post Weld Heat Treatment (PWHT).

3.6.13.8.7 Vessel Acceptance Testing

A. Leak Tests

1. If gas or pneumatic leak testing is specified in the MDSs, DPDs, or in the purchase order, VENDOR shall conduct the tests in accordance with ASME BPVC Section V, Article 10.

2. Reinforcing pad attachment welds and accessible surfaces of inside nozzle to vessel wall welds shall be tested for leaks with 15 PSIG dry air or nitrogen and bubble forming solution.

3. The leak test shall be performed prior to the final hydrostatic test.

B. Hydrostatic Test

1. The hydrostatic test shall be performed after any specified leak tests.
2. The vessel hydrostatic test shall be performed in accordance with ASME BPVC, Section VIII, Division 1, Part UG-99 as specified on the MDSs or DPDs.
3. Deleted
4. All welds shall be sufficiently cleaned and free of scale or paint prior to hydrostatic testing.
5. Testing of vessels or components made of austenitic stainless steel materials shall be conducted with potable water containing no more than 50 PPM chloride.
6. Deleted
7. The final hydrostatic test pressure shall be held for a minimum of one hour.
8. Test water shall not be in contact with austenitic stainless steel for more than 72 hours, unless treated with a BUYER approved biocide.
9. After completion of the hydrostatic test, the vessel and internal piping shall be drained, dried, cleaned thoroughly inside and outside to remove grease, loose scale, rust, and dirt and closed as quickly as practicable.

C. Deleted

D. Obstruction Inspection

1. VENDOR shall ensure and document that all internals, internal piping, and jacketing are free from obstructions.
2. If visual inspection cannot confirm lack of obstructions, a flow test shall be performed on internal piping and jackets as specified on the MDSs or DPDs.

E. Final inspection

1. Final inspection is a required hold point, and BUYER shall have 10 days notice.
2. Final inspection of the completed vessel shall be the sole responsibility of VENDOR.
3. The finished dimensions and cleanliness of the vessels shall be inspected to confirm compliance with the relevant drawings and specifications after completion of all tests.
4. All inspection documentation should be complete with all inspection signatures and assembled as defined in Section 3.6.10.

5. Overall visual inspection shall be performed to confirm vulnerable equipment items to include but not limited to small bore piping, and seals, etc. are free from damage.
6. Inspection shall be performed to confirm equipment and nozzle orientations are correct.
7. Inspection shall be performed to confirm that all structural and equipment bolt tightening has been completed to manufacturer requirements.
8. Inspection shall be performed to confirm that surface finish matches design documents.
9. Inspection shall be performed to confirm labeling includes the correct item identification and marking in compliance with Section 3.6.7, Identification and Marking.
10. VENDOR shall prepare a final inspection report for each contract item, which documents the results of the final inspection.

3.6.13.8.8 Source Quality Control

A. Orders for pressure vessels shall be subject to random fabrication-site inspections by BUYER or his designee.

B. All records pertaining to base materials, filler materials, fabrication, and inspection including welder's qualification record shall be accessible for BUYER's examination

C. VENDOR shall make a complete set of BUYER approved drawings and other documents available to BUYER's representative at the time the quality surveillance activities are being conducted.

D. BUYER's review of VENDOR's drawings, or release of the vessel for shipment by BUYER's representative shall in no way relieve the VENDOR of the responsibility for complying with all the requirements of this specification and purchase order.

3.6.14 Valves

3.6.14.1 All valves shall be supplied by the BUYER.

Vendor is responsible for any disassembly and reassembly activities required to support installation of supplied valves into the CFF Module and system testing.

3.6.14.2 Valve System Description

The specialty valves described in this document are for pressure containment, isolation, modulation, and diversion of radioactive fluids and process services. All the subject valves in this specification are tapered plug valves with self-contained removable inner cartridge/modules.

- Supplied valves will have Butt-weld ends beveled in accordance with the applicable Figure No. 2a or 3a of ASME B16.25 and will be bored to match the pipe schedule specified on the data sheet.

- Supplied valves are designed with extended shafts and sleeves to allow for remote operation and maintenance. Critical interface dimensions for the valves are on the applicable DPDs.
- Sleeved valves are provided with a split support collar that interfaces with the VENDOR supplied structural frame work.

3.6.14.3 Valve Mechanical Loading

The VENDOR shall design the sleeved valve split support collar interfacing structural steel and welds to be adequate to accommodate the loadings which would produce a stress less than the ASME B31.3 Code allowable stress for the process pipe which is connected to the valve (at rated pressure and temperature). Lugs/brackets for anchoring shall be designed to meet the seismic qualifications as required by the method(s) defined in Section 3.6.22, as applicable.

3.6.14.4

3.6.14.5 Deleted

3.6.14.6 Deleted

Figure 3-20: Deleted

3.6.14.7 Deleted

3.6.14.8 Deleted

Table 3-10 Deleted

3.6.15 Structural Steel

3.6.15.1 Structural Materials

Except for vessels, stainless steel furnished as bulk material or delivered as fabricated assemblies shall be as follows unless otherwise noted on the design drawings:

3.6.15.1.1 Shapes and Bars: Conform to ASTM A276, Type 304L or 316L.

3.6.15.1.2 Plates: Conform to ASTM A240, Type 304L or 316L.

3.6.15.1.3 Pipe: Conform to ASTM A312, Grade TP 304L or 316L.

3.6.15.1.4 Tubing: Conform to ASTM A554, Grade MT-304L, Tensile strength 70 ksi min, Yield strength 25 ksi min.

3.6.15.1.5 Bolts: Conform to ASTM A193, Grades B8 or B8M, Class 1

3.6.15.1.6 Remote Studs: ASTM A276 Nitronic 60 (located per DPD drawings)

3.6.15.1.7 Nuts: Conform to ASTM A194, Grade 8 or 8M, heavy hex.

3.6.15.1.8 Washers: Cut from plate Conforming A 240, type 304 or 304L, or machined from bar stock that meets ASTM A193, B8 or B8M, Class 1. Dimensions in accordance with ASTM F436.

3.6.15.1.9 Welding Filler Metal: Conform to AWS D1.6

3.6.15.2 Shop Fabrication for Structural Steel

3.6.15.2.1 Structural steel elements shall be designed and fabricated in accordance with the requirements of AISC 360 and N690. Piping supports shall be designed in accordance with ASME B31.3.

3.6.15.2.2 Substitute sections or modification of design details shall be permissible only with the BUYER's written approval prior to fabrication.

3.6.15.2.3 Welding shall be performed in accordance with AWS D1.6.

3.6.15.2.4 Inspection and examination of welds shall be in accordance with AWS D1.6.

3.6.15.2.5 Welding Filler Material shall meet the quality standards of and be supplied in accordance with AWS D1.6 and the following additional requirements:

A. Control shall be established and implemented, with objective evidence through supplier's records, to ensure that only correct and accepted items and materials are used. Consumed filler material lot or heat numbers shall be documented on one or more of the following record: drawings, weld map, shop travelers, inspection reports, etc.

B. The VENDOR shall submit an inspection plan covering the inspections to be performed on weld filler metal for BUYER's review. VENDOR shall submit their Material Control Procedure for controlling, issuance, handling, storage, and traceability for welding metals.

3.6.15.3 Bolts

3.6.15.3.1 A minimum of two bolts in each joint shall be used for permanent installation.

3.6.15.3.2 Washers shall be used for all bolts. Beveled washers shall be used for flange attachments to S-shapes and channels. Plate washers shall be provided per AISC 348 'Specification for Structural Joints Using High-Strength Bolts' by Research Council on Structural Connection, RCSC.

3.6.15.3.3 All bolts required for erection shall be in clearly marked containers and included with the first shipment of fabricated steel for each unit or structure unless alternate shipping methods are authorized, in writing by the BUYER. Common bolt assemblies shall not be in the same container as high strength bolt assemblies.

3.6.15.3.4 Quantities of both common and high strength bolts, including nuts and washers, shall include 5 percent extra per size and length, to cover requirements for fit-up erection.

3.6.15.3.5 All bolting materials shall be certified (CMTRs for safety designated equipment and Certificate of Compliance C of C for other equipment), unless noted otherwise.

3.6.16 Piping

3.6.16.1 Section Scope

A. Piping shall be designed, fabricated, tested, and inspected, to requirements of ASME B31.3 for Normal Fluid Service. Additional inspection and examination requirements are given in Section 3.6.18.3.

B. VENDOR shall provide ASME B31.3 calculations including stress analysis calculations to verify design stresses in the piping due to internal pressure and longitudinal stress resulting from sustained, thermal, and occasional (i.e. seismic) loads do not exceed the maximum allowable stress defined in ASME B31.3

C. VENDOR to provide any reinforcement calculations and non-listed material evaluations as required by ASME B31.3.

D. Unless otherwise specified process piping shall be designed for a design pressure of >= 400 psig and a design temperature of >= 170 degrees F.

E. The Heat Exchanger shall be designed, fabricated, tested, examined, and inspected to the requirements of this section. Design pressure and NPH criteria shall be in accordance with the applicable datasheet.

F. The BUYER shall be advised immediately in an RFI of any conflicts as soon as they are identified.

G. No material substitutions or deviations shall be made to this specification without written approval from the BUYER. All substitutions and deviations shall be submitted to the BUYER for resolution via the RFI process. If differences exist between the drawings, the specifications, or the referenced codes and standards, the BUYER shall be contacted to resolve the conflict. The BUYER's final resolution shall govern.

H. The VENDOR shall not prepare pipe spool or fabrication drawings until drawings designated "APPROVED FOR CONSTRUCTION" (AFC) are received.

I. The VENDOR is not authorized to begin fabrication until the VENDOR's drawings are reviewed and approved by the BUYER.

J. The VENDOR's drawings will be reviewed as requested by the BUYER. The BUYER's review will not relieve the VENDOR of the responsibility for either the accuracy of the VENDOR's drawings or compliance with this specification and the referenced drawings.

3.6.16.2 The scope of the VENDOR's work for shop fabrication includes the following:

A. Fabricating and testing all piping in accordance with the requirements of this specification. See pressure testing related checklists in Appendices A through C.
B. Furnish all labor, supervision, tools, equipment and consumable materials required to perform all work specified herein.
C. Procuring, handling, protecting and maintaining records or accounting of all materials required to complete the fabrication of pipe.
D. Preparing spool drawings.
E. Fabrication of pipe spools including installation of all connections shown on the drawings such as for fittings, flanges (including orifice flanges), branch connections/reinforcements, weld-in type thermowells, nuts for supporting insulation on vertical piping, all welded pipe supports and any other structural attachments shown on the engineering drawings.

F. Performing all nondestructive examinations (NDE) for welds and bends as required by this specification.
G. Providing cleaning and identification of piping.
H. Providing welded attachments required for the pipe supports shown on the drawings.
I. Providing weld end prep of all piping.
J. Applying protective coatings to surfaces after fabrication, as required by this specification. This shall include flanges.
K. Providing and installing temporary protective covers.
L. Providing packaging, crating, loading and shipping of fabricated spools and components.

3.6.16.3 The scope of the VENDOR's work for module fabrication includes the following:

A. Complying with the scope of the VENDOR's work for shop fabrication specified above.
B. Installation of all valves, instrumentation, pipe supports, hangers, specialty items and connections shown on the drawings such as relief valve nozzles, vents and drains and all other piping associated with the module fabrication.
C. The assembly and erection of pipe in modules and connecting pipe to module equipment.
D. Insulating and heat tracing of piping (if required by piping drawings).
E. Performing Positive Material Identification (PMI) and pressure testing in accordance to ASME B31.3 and this specification.

3.6.16.4 Piping Submittals

3.6.16.4.1 VENDOR shall provide shop spool drawings that, as a minimum, show the following:

A. Location of all field welds identified as "FW" (Field Weld).
B. Location and identification number of all shop welds, including weld symbols in accordance with American Welding Society (AWS) A2.4.
C. Line Number and Shop Weld Number. Shop welds examined by NDE shall be added to the drawing after completion of NDE.
D. Piece numbers, line numbers and flow direction arrows as identified on piping drawings.
E. Weld end preparation details.
F. Heat and lot number or some type of approved code number that provides traceability for materials requiring Certified Material Test Reports (CMTRs).
G. Location of hanger lug attachments, etc.
H. Bill of Materials.
I. Pipe spool dimensions, assembly weight and pressure testing pressure.
J. Applicable Code and Preheat and Post Weld Heat Treatment procedures.
K. Reference notes, specifications and drawings.
L. Spool drawing example.
M. Welding Procedure Specifications.

3.6.16.4.2 VENDOR shall provide the following procedures, plans and records:

A. Inspection and test plan (including traveler summaries), pressure test procedure, and test instrument and measuring tool calibration plan.
B. Shop assembly plan.
C. Complete Welding Procedure Specifications (WPS) shall be submitted with applicable Procedure Qualification Records (PQR) prior to start of any welding, bonding, brazing, and heat fusion process as well as welders continuity records. Procedures shall be qualified in accordance with ASME B31.3, Para. 328.2 and ASME Boiler & Pressure Vessel Code (BPVC) Section IX. Welding shall not proceed until procedures have been reviewed, approved and released for fabrication.
   1. The welding procedures shall follow the format of and include all the information required by Form QW-482 of Section IX of the BPVC.
   2. Preheat and Post Weld Heat Treatment (PWHT) procedures, which includes PWHT thermocouple placement.
   3. Weld repair procedures and procedures for issuance and storage of welding filler material to the BUYER for approval.
D. Purge dam control procedure which shall include the prohibition of dissolvable purge dam material for pneumatically flushed piping systems and shall include methods to assure removal of all purge dams.
E. Bending procedure which includes forming temperatures, procedures for heat treatment after bending and inspection procedures.
F. Material control procedures.
G. NDE procedures including:
   1. PMI procedures to cover safety, techniques used, equipment to be used, equipment calibration, Test Personnel Qualifications, testing methodology, acceptance criteria and the documentation requirements, and how the process will be managed.
   2. Minimum wall thickness measurement procedures for bulk pipe and butt weld fittings. Submittal shall include VENDOR's inspection and sampling plan.

3.6.16.4.3 VENDOR shall submit copies of the following reports:

A. Weld maps to include all pertinent information to the weld, including welded joint location, identification of associated WPS and description/sketch of joint. Weld repairs complete with location and evaluations and evidence of re-examination acceptance after repair.
B. An outline of welding procedures, heat treatment and nondestructive examination (NDE) shall be included for each pipe material class.
C. Nondestructive inspection reports and evaluations of radiographic film, liquid penetrant, magnetic particle examinations, ultrasonic examinations, visual examinations and any other examinations performed by the VENDOR. Radiographic evaluations shall show date, line number, weld identification number, developed (exposed) radiographic film originals and other pertinent information (i.e., image quality indicators, penetrameters, etc.) for each weld radiographed.
D. PMI reports and documentation per section of this document.
E. Wall thickness measurement reports containing each heat/lot along with sample results per the Shop Quality Control section of this document.

F. VENDOR shall provide the following certifications and qualifications:
   1. NDE personnel certifications/qualifications (NDE and testing personnel requiring certification include those involved in visual, radiographic, ultrasonic, magnetic particle and dye penetrant examination).
   2. Liquid penetrant material certifications.
   3. Complete ASME Personnel qualification or certification records:
   4. Welder Qualifications
   5. Hydrostatic/Pneumatic/PMI Test Personnel Qualifications.

3.6.16.4.4 VENDOR shall submit copies of the following certificates/reports:

A. Calibration certificates/reports.
B. Pressure test reports for all module installed piping systems. Shop fabricated piping spools that will be installed in the field will be pressure tested after installation. The forms used to report the results of pressure tests for all piping systems shall be subject to the BUYER's approval and shall contain at least the following information:
   1. Complete description of system (boundary limits, line number, size, length, number of valves and flanged joints).
   2. Record of cleaning.
   3. Complete description of test (test pressure required, test pressure, test medium including ppm halogen content test analysis, calibration date of pressure gage, temperature of test medium, ambient temperature, hold time, VENDOR's name, signature of responsible individual, and date of test).
   4. Record of joint repairs (including date, extent of repairs, and responsible individual).
   5. Signature, date and title of BUYER's representative witnessing the operation. Each critical operation (e.g., pretest inspection, pressure testing, and posttest inspection) shall be witnessed.
C. Flushing records.
D. Cleaning and coating records:
   1. Date and name of VENDOR and responsible individual.
   2. Inspection or examination records.
   3. Cleaning methods.
   4. Certification of visual examination for surface preparation, surface profile, materials.
   5. Humidity data, temperature data and coating total Dry Film Thickness data of coating.
   6. A ppm halogen content test analysis.
E. Records of PWHT for welds, including temperature charts identifying each piece number and line number, set point temperature and holding time, a description of the equipment used, and calibration dates of thermocouples and the recorder.
F. Annual Vision Test Records (visual acuity) for Jaeger, Snellen, etc. tests.
G. Pipe Bending report for each shop bend.
H. Verification of gasket and seal (including O-rings) functionality reports.
I. Commercial Grade Item (CGI) Reports.
J. Dimension Verification Reports (including Critical Dimensions).

3.6.16.5 VENDOR shall submit technical data sheets for all piping components and shall submit technical data sheets and Safety Data Sheets for elastomers, surface coatings and lubricants for any and all such materials being provided.

3.6.16.6 VENDOR shall submit spool and installation drawings.

3.6.17 Piping Materials

A. CMTRs and CoCs are required for all piping component material.
   1. All pipe and piping components (i.e., fittings, flanges, bolts, gaskets, etc.) shall be furnished new and in accordance with this specification.
   2. All flange facings shall be 100% visually examined. Flange facings shall meet ASME B16.5 Paragraph 6.5.6.
   3. End connections shall be furnished in accordance with the following:
      a. Pipe threads shall be taper threads in accordance with ASME B1.20.1.
      b. Butt-weld ends in accordance to ASME B16.25. Flame cut weld bevels are not allowed.
   4. Each piping system shall be identified in accordance with ASME A13.1.
   5. All pipe and piping components shall be marked in accordance with the specification (i.e., ASTM, ASME, etc.) referenced for manufacture. Flanges, fittings and unions shall be marked in accordance with MSS SP-25 if no marking is specified.

B. Piping materials shall be in accordance with Figure 3-21: Pipe Specification unless otherwise noted.

CORROSION ALLOWANCE	0.063in	DESIGN CODE	ASME B31.3
EXAMINATION	Per ASME B31.3	MATERIAL	316 316L Dual Marked
RATING CLASS	CL300, ASME B16.5	STRESS RELIEF	Not Req'd
TEMPERATURE LIMIT	-20F to 170F		

PRESSURE - TEMPERATURE RATINGS

Temp F	-20	100	170
Temp C	-29	38	77

psig	400	400	400
kPag	2760	2760	2760

ITEM	Notes	Rev	NPS1 / NPS2	Sch / Rat	Commodity Code	Opt	Description
PIPE			1/2" - 12"	S-40S	PPSAB0S2NB00	1	Pipe, smls, SS, A312 TP316/316L, B36.19M, BE,.
PIPE	43		8" - 8"	S-80S	PPSAB0S2NB00	10080	Pipe, smls, SS, A312 TP316/316L, B36.19M, BE,.
NIP			1/2" - 3"	S-40S	PNNIPBA3S2N0	1	Nipple, pipe, smls, SS, A312 TP316/316L, A733/B36.19M, 3" long, BBE,
NIP			1/2" - 3"	S-40S	PNNIPBA6S2N0	738	Nipple, pipe, smls, SS, A312 TP316/316L, A733/B36.19M, 6" long, BBE,
CAPBV			1/2" - 12"		PWCAPAAS3N00	1	Cap, B16.9, BE, A403 WP316/316L-S,
CAPBV	43		8" - 8"		PWCAPAAS3N00	10073	Cap, B16.9, BE, A403 WP316/316L-S,
E45LR			1/2" - 12"		PWE4LAAS3N00	1	45 LR elbow, B16.9, BE, A403 WP316/316L-S,
E45LR	43		8" - 8"		PWE4LAAS3N00	10073	45 LR elbow, B16.9, BE, A403 WP316/316L-S,
E90LR			1/2" - 12"		PWE9LAAS3N00	1	90 LR elbow, B16.9, BE, A403 WP316/316L-S,
E90LR	43		8" - 8"		PWE9LAAS3N00	10073	90 LR elbow, B16.9, BE, A403 WP316/316L-S,
E90SR			1" - 12"		PWE9SAAS3N00	1	90 SR elbow, B16.9, BE, A403 WP316/316L-S,
TEE			1/2" - 12"		PWTEEAAS3N00	1	Tee, B16.9, BE, A403 WP316/316L-S,
TEE	43		8" - 8"		PWTEEAAS3N00	10073	Tee, B16.9, BE, A403 WP316/316L-S,
REDC			3/4" - 12" 1/2" - 10"		PWRECA1S3N00	1	Conc red, B16.9, BE x BE, A403 WP316/316L-S,
REDC	43		8" - 8" 4" - 6"		PWRECA1S3N00	10073	Conc red, B16.9, BE x BE, A403 WP316/316L-S,
REDE			3/4" - 12" 1/2" - 10"		PWREEA1S3N00	1	Ecc red, B16.9, BE x BE, A403 WP316/316L-S,
REDE	43		8" - 8" 4" - 6"		PWREEA1S3N00	10080	Ecc red, B16.9, BE x BE, A403 WP316/316L-S,
TRB			3/4" - 12" 1/2" - 10"		PWTRBA1S3N00	1	Tee red, B16.9, BE x BE, A403 WP316/316L-S,
TRB	43		8" - 8" 4" - 6"		PWTRBA1S3N00	10073	Tee red, B16.9, BE x BE, A403 WP316/316L-S,
FWN	12		1/2" - 12"	CL 300	PFWNAABS2N00	1	Flg, WN, A182 F316/316L, B16.5, CL 300, RFFE,
FWN	12, 43		8" - 8"	CL 300	PFWNAABS2N00	10073	Flg, WN, A182 F316/316L, B16.5, CL 300, RFFE,
LOL			3" - 12" 1/2" - 6"		PWLOLKWS2NDC	1	Latrolet, Mfg. Std., BE x BE, A182 F316/316L, In acc. w/project design code
LOL	43		8" - 8" 1-1/2" - 4"		PWLOLKWS2NDC	10073	Latrolet, Mfg. Std., BE x BE, A182 F316/316L, In acc. w/project design code
WOL			3" - 12" 1/2" - 6"		PWWOLKWS2N00	1	Weldolet, MSS-SP-97, BE x BE, A182 F316/316L,
WOL	43		8" - 8" 1/2" - 3"		PWWOLKWS2N00	10073	Weldolet, MSS-SP-97, BE x BE, A182 F316/316L,
GASINS			1/2" - 12"	CL 300	PGFKAA0ENBID	1	Gasket, insul kit, RFFE, 316SS retainer w/ EPDM seal, B16.5,, CL 300, two SS washers for each bolt, without insulation sleeve or washers, 300F max temp, GPT Linebacker
BLTG			1/2" - 12"		PTS2101B8T00	1	Stud bolt w/2 nuts, A193 Gr. B8M CL2 w/ A194 Gr. 8MA nuts, B18.2.1/B18.2.2.

SPECIFICATION NOTES:

12 Flanges per this pipe class shall be used in lines allowing for hands-on maintenance only and limited to locations identified on piping drawings.

43 Schedule 80S pipe fittings to be used as required for the CFF solids recirculation loop.

Pipe schedules shown are minimum only. Heavier schedules may be used when specified on design documents.

Figure 3-21: Pipe Specification

BRANCH	12	10	8	6	4	3	2	1.5	1	.75	.5
12	TEE										
10	TRB	TEE									
8	TRB	TRB	TEE								
6	WOL	TRB	TRB	TEE							
4	WOL	WOL	TRB	TRB	TEE						
3	WOL	WOL	WOL	TRB	TRB	TEE					
2	WOL	WOL	WOL	WOL	WOL	TRB	TEE				
1.5	WOL	WOL	WOL	WOL	WOL	WOL	TRB	TEE			
1	WOL	WOL	WOL	WOL	WOL	WOL	TRB	TRB	TEE		
.75	WOL	WOL	WOL	WOL	WOL	WOL	TRB	TRB	TRB	TEE	
.5	WOL	WOL	WOL	WOL	WOL	WOL	TRB	TRB	TRB	TRB	TEE

HEADER

TEE	Tee
TRB	Tee red
WOL	Weldolet

Figure 3-22: 90 Degree Branch Connection Legend and Chart

3.6.18 Pipe Welding

3.6.18.1 Piping General

This Specification section covers the minimum requirements for the welding, heat treatment, weld examination and inspection, testing, and repair of circumferential welds and branch connections in both the shop and field fabrication of piping. This specification shall be used in conjunction with ASME B31.3 and other Codes and Standards referenced within.

3.6.18.2 Piping Weld Materials

3.6.18.2.1 Filler metals shall meet the requirements of ASME BPVC Section II Part C. After opening of hermetically sealed containers, filler metals and fluxes shall be handled, stored and monitored in accordance with the manufacturer's recommendations. All filler metals shall be submitted with Certified Material Test Reports (CMTRs) and shall be submitted for approval.

3.6.18.2.2 Filler metals shall be shown on the Welding Procedure Specification (WPS) and Procedure Qualification Records (PQR) by AWS or ASME classification except that submerged arc wire and flux combinations shall be shown on the WPS by AWS or ASME classification and manufacturer's designation.

3.6.18.2.3 The use of internal purge dams such as inflatable balloons or water-soluble paper shall be used where required. All water-soluble paper purge dams shall be approved prior to use.

3.6.18.3 Piping Shop Quality Control

3.6.18.3.1 All welding under this specification shall be placed on hold until the Welding Procedure Specifications (WPS), Procedure Qualification Records (PQRs) and Welder Qualification Test Records (WQTRs) have been approved by the BUYER's engineer.

3.6.18.3.2 The VENDOR shall be responsible for qualifying the welding procedures. All welders and welding procedures shall be kept current for the duration of the project. The VENDOR shall maintain a list of all welders (including their qualifications) used on this project. Records of continuity as described in ASME Boiler and Pressure Vessel Code (BPVC) Section IX, QW-322 shall be submitted and subject to BUYER approval.

3.6.18.3.3 All welders shall be qualified in accordance with the requirements of ASME B31.3, Para. 328.2. Welders performing successful procedure qualification tests are considered qualified to that procedure.

3.6.18.3.4 Weld symbols shall be displayed on assembly and shop drawings in accordance with AWS A2.4. Each qualified welder shall be assigned a unique and unduplicated identifying symbol or number. Each identifying mark shall be employed exclusively by an individual welder. In the event a welder is terminated or leaves before completion of the project, his identifying mark shall be retired and shall not be reassigned to another welder.

3.6.18.3.5 All welds shall be examined in accordance with the requirements of ASME B31.3 Chapter VI. The extent of examination shall as follows:

1. 100% visual examination per ASME B31.3, Para. 341.4.1(A) and 344.2 of materials, components, fabrication, joint assembly, and of alignment and supports during or after erection.

2. 100% volumetric examination [radiographic test (RT) or ultrasonic test (UT)] of welds shall be performed in accordance with ASME B31.3 where possible (i.e., in-process examination shall not be specified) for all piping systems. In those cases where volumetric examination is not possible (e.g., orientation of the weld), the subject welds shall have documented in-process examination in accordance with ASME B31.3, paragraph 344.7 with liquid penetrant or magnetic particle examination specified for the root pass (see paragraph 344.7.1(e)) and shall be identified as such on the fabrication drawings. Fabrication drawings shall be approved by the BUYER prior to fabrication. The determination of whether a volumetric inspection is possible shall be made by an AWS Certified Welding Engineer (CWEng), a ASNT SNT-TC-1A Level III (RT and UT) Nondestructive Examination (NDE) examiner, or a ASNT SNT-TC-1A Level II (RT and UT) NDE examiner and shall be approved by BUYER on a weld-for-weld basis. BUYER's approval shall be obtained on the fabrication work control document. Individual items described in paragraph 344.7.1 shall be documented (e.g., checklist format) for each in-process examination. The in-process examinations shall not be used to meet the required representation of the welder's or the welding operator's work unless necessary to meet the required representation of work.

3. Radiographic examination shall be per ASME B31.3, Para. 341 through 344 for circumferential butt and miter welds and of branch connections similar to those shown in ASME B31.3, Figure 328.5.4(E). The method of ultrasonic examination shall be in accordance with ASME BPVC, Section V, Article 4.

4. The liquid penetrant method or magnetic particle method shall be applied to 100% of all fillets and attachment welds. Liquid penetrant examination shall be per ASME B31.3, Para. 344.4. Magnetic particle examination shall be per ASME B31.3, Para. 344.3.

3.6.18.3.6 Acceptance criteria shall be in accordance with ASME B31.3, Para. 341.3.2. Acceptance criteria stated elsewhere in applicable reference specifications shall be followed.

3.6.18.3.7 All welds as a minimum require a visual examination. Visual examination is governed by ASME B31.3, and all NDE personnel utilized shall be certified in accordance with ASNT SNT-TC-1A to Level II or an AWS Certified Welding Inspector (CWI).

3.6.18.3.8 The VENDOR shall be responsible for providing Records of Annual Vision Tests required by ASME BPVC, Section V, Article 9, T-923 for all ASME B31.3 examination personnel.

3.6.18.3.9 Records for NDE personnel shall be available for review or inspection upon request of the BUYER.

3.6.18.3.10 The VENDOR shall submit and maintain weld maps for each weld.

3.6.18.3.11 Segregation of carbon steel and stainless steel shall be maintained throughout the welding and fabrication process.

3.6.18.3.12 Nonconforming material shall be physically segregated from acceptable items when possible and shall be in strict accordance to the Quality Assurance section of this specification.

3.6.18.4 Piping Erection, Installation & Application

3.6.18.4.1 General Welding Requirements

A. Deleted
B. Pads and other welded attachments shall be welded to the piping before heat treatment. Carbon steel attachments welded to stainless steel pipe are not allowed for FQA/EQA piping systems.
C. Butt weld ends shall be prepared in accordance with ASME B16.25.
D. Backing rings shall not be used and consumable inserts shall not be used without prior written approval of the BUYER. BUYER's approval shall be obtained on the fabrication work control document.
E. Each qualified welder shall identify each of their welds with their assigned, unique and unduplicated identifying symbol or number adjacent to the weld joint. Steel stamping is not allowed; use Vibro Tool or BUYER approved substitute. For stainless steel and nonferrous alloys, marking materials shall contain less than 50 ppm chlorides and shall not contain any harmful metal or metal salts such as zinc, lead, or copper. Markings shall not be water soluble.

F. Peening of weld deposits and/or base materials is not permitted.
G. Tack welds shall be consumed in the weld, or removed prior to welding.

3.6.18.4.2 Welding Processes

A. Welding of piping materials for fabrication or installation shall be per ASME B31.3.
B. The Gas Tungsten Arc Welding (GTAW) process shall be used to weld at least the root and hot pass on process piping and process pressure retaining components that are welded from one side.
C. All GTAW welds must be made with the addition of filler metal.
D. The Gas Metal Arc Welding (GMAW), Flux Core Arc Welding (FCAW), Shielded Metal Arc Welding (SMAW), or Submerged Arc Welding (SAW) processes can be used for welding on process piping and process pressure retaining components subject to proper qualification as allowed by the WPS.
E. The short-circuit GMAW transfer process shall not be utilized on any material.
F. The application of heat to correct weld distortion and dimensional deviations is prohibited without BUYER approval using an NCR for a repair condition.

3.6.18.4.3 Purge Procedure

A. The shielding and backing gas composition and flow rates shall be as specified in the WPS. Moisture control shall be by specification of shielding gas classification per AWS A5.32.
B. The installation and removal of inflatable balloons shall be tracked on weld maps to ensure their removal.
C. Sufficiency of purge shall be verified by measuring Oxygen concentration prior to welding.

3.6.18.4.4 Preheat and Post Weld Heat Treatment

A. Preheat and Post Weld Heat Treatment (PWHT) requirements shall be addressed in detail on the WPS.
B. Electric or gas heat sources which provide a uniform application of heat over the weld area shall be used.
C. Branch connections and other attachments shall be welded to the lines before commencement of heat treatment.
D. Preheat and post weld heat treatment shall be in accordance with the requirements of ASME B31.3, Paragraphs 330 and 331. The maximum preheat and interpass temperatures for the welding of austenitic stainless steel shall not exceed 350°F (177°C).
E. Minimum preheat temperatures specified for welding shall also be utilized for tack welding, as well as welding.
F. Time-temperature cycle records for the furnace, induction, or resistance method shall be prepared and kept on file by the VENDOR. These records shall identify the piece numbers involved and show a continuous recording of the time-temperature cycle. Thermocouple placement shall be recorded.

3.6.18.4.5 Weld Repairs

A. The BUYER reserves the right to have the VENDOR cut out and test any and all welds, irrespective of defects. The VENDOR shall furnish equipment and personnel to cut out welds designated by the BUYER for testing. Entire welds shall be cut from the line by cutting the pipe 2 inches back from each side of the weld. Coupons will be cut from pipe, per Paragraph QW-462 of the ASME BPVC, Section IX, so that the weld may be tested for tensile strength, ductility and foreign inclusions.
B. The cost of replacing sound welds ordered removed by the BUYER will be borne by the BUYER. The cost of replacing or repairing defective welds including additional examinations or tests resulting from those defects shall be borne by the VENDOR.
C. Defects in welds shall be removed by flame or arc gouging, chipping, machining or grinding, but preferably by mechanical means. If removed by a thermal process, an additional 1/16 inch shall be removed by mechanical grinding. Excavated areas shall be magnetic particle tested (ferrous material) or liquid penetrant tested (non-ferrous material) to assure defect removal. Inspection reports shall be generated. Repair welds shall be made in accordance with welding procedures which have been previously approved for the original weld, unless an alternate procedure is approved by the BUYER.
D. Should laminations or split ends be discovered in the pipe, the joints containing such defects shall be cut back to a point where these defects no longer exist.
E. Examination and/or inspection of the completed weld repair shall be the same as the original weld or by a BUYER approved alternate method.
F. No more than two repairs will be permitted on any one weld.
G. Cutting out and rebeveling then rewelding is considered a weld repair.
H. No further attempts to repair shall be carried out without the written authorization of the BUYER using the NCR process.
I. Weld repairs subsequent to the first two repair attempts shall be made only after receiving written approval of VENDOR's repair procedures.
J. Arc Strikes shall be removed and the area ground to a smooth contour. After grinding the area shall be examined by liquid penetrant or magnetic particle examination(as applicable).
K. The metal wall thickness shall not be reduced less than that permitted in the applicable ASTM standard, without BUYER's approval.

3.6.18.4.6 Fabrication Tolerance and Alignment

A. Unless otherwise specified, dimensions of all shop fabricated piping shall be within the tolerances specified in Pipe Fabrication Institute (PFI) Standard ES-3 and the BUYER's Drawings.

B. All piping shall be plumb and square. Unless otherwise specified, the internal misalignment of ends to be joined shall not exceed the lesser of 1/16 inch or as permitted by the WPS. Where misalignment exceeds the permitted misalignment, the end of the thicker pipe shall be bored in accordance with Paragraph 328.4.3 of ASME B31.3.

C. Templates, pantographs, or other suitable methods shall be used in laying out stub-ons, laterals, and other irregular details to ensure accurate cutting and proper fit-up. Caution shall be used in fitting up pipe and components for tack welding, to ensure a proper gap for full-penetration welds.

D. Unless otherwise specified, bolt holes of fixed flanges shall be oriented as follows:

1. Vertical flange faces: A pair of bolt holes shall straddle the vertical centerline.
2. Horizontal flange faces: A pair of bolt holes shall straddle the plant north/south centerline.
3. Sloping flange faces: A pair of bolt holes shall straddle the plane defined by the centerline of the pipe and a vertical line.

E. Deleted

3.6.18.4.7 Orifice Flange Assemblies

The internal surface of welds between the orifice flanges and the connecting pipe shall be ground smooth.

3.6.18.4.8 Branch Connections and Miscellaneous Attachments

A. All connections for branches, vents, drains and instruments are specified in each pipe material class.
B. The VENDOR shall install thermowells per detail drawings in each applicable pipe material class.
C. Reinforcing pads and saddles, when used, shall be provided with tapped vent holes that are suitable for pneumatic testing.
D. Reinforcement pads and saddles specified in the pipe material classes or shown on the drawings shall be fabricated to meet the requirements of ASME B31.3.
E. Miscellaneous attachments for hangers, supports or guides shall be of material similar to the pipe and be suitable for the operating temperature.

3.6.18.4.9 Pipe Bending and Forming

A. Pipe bending and forming shall conform to the requirements of PFI ES-24 and ASME B31.3.
B. Bends identified on the drawings shall be formed with the radii specified.
C. Piping bends are preferred over the use of elbows where practical to reduce the number of weld joints.
D. The VENDOR shall submit a procedure to the BUYER approval, for verifying the post bending wall thickness in the extrados of the bend meets the minimum wall thickness per ASME B31.3. Wall thickness verification can be performed by qualification of the bending process or measurement of the wall thickness post bending.
E. All shop bends shall be placed on hold and a bending procedure be submitted and approved by the BUYER prior to commencement of fabrication. VENDOR shall submit a bending procedure which includes

forming temperatures, procedures for heat treatment after bending and inspection procedures.

F. Tolerances for dimensions of pipe bends shall be in accordance with PFI ES-24.

G. All bends shall be induction bent per Paragraph 332 of ASME B31.3. Where induction bends are not practical cold bends shall be utilized per Paragraph 332 and 304.2.1 of ASME B31.3. No alternates or substitutions will be allowed without prior written approval of the BUYER via the fabrication work control document. Use methods and equipment that produce bends free of wrinkles, bulges or kinks.

H. Refer to the Piping Shop Quality Control section of this specification for examination requirements.

3.6.18.4.10 Heat Treatment

A. All spools and fabricated modules shall be checked for dimensions and alignment after heat treatment and a gage check shall be made on the threads of couplings, threadolets, and nipples in the spools. Pipe shall also be checked for straightness. Deviation from a straight line shall not exceed 0.2 percent of the length. Piping shall be replaced if threads are out of tolerance or pipe is not straight.

B. After all hot bending, welding, grinding and heat-treating operations have been completed the threads shall be "chased" with the appropriate size pipe tap to remove scale and weld spatter, and to ensure full engagement of threads and a tight joint.

3.6.18.4.11 Quality Control

A. Wall thickness measurement procedures and reports shall be provided for piping identified as FQA and EQA. Wall thickness measurements apply to pipe bends, piping, bulk piping, butt-weld flanges and butt-weld fittings.

B. Wall thickness measurement samples shall be completed for each heat/lot used for spool fabrication and as a minimum shall meet the "Normal Sampling Plan" per Report TR-017218-R1 Table 2-1. A sampled item is considered defective if the measured wall thickness does not meet the established acceptance criteria. The lot acceptance basis is as follows:
   1. The lot shall be accepted if the sample metal wall thickness is within the permitted thickness tolerances in the applicable ASTM standard.
   2. For ASME B16.9 tees the lot shall be accepted if:
      a. The sample metal wall thickness is a minimum of 1.00 times the nominal thickness specified in ASME B36.10M or B36.19M for straight pipe of the specified schedule.
      b. The Tee side wall and crotch wall thickness is a minimum of 1.15 times the nominal thickness specified in ASME B36.10M or B36.19M for straight pipe of the specified schedule.
   3. The lot shall be rejected (considered nonconforming) if the sample has one or more metal wall thicknesses not within the permitted thickness tolerances in the applicable ASTM standard.

C. Nonconforming lots shall require metal wall thickness measurements of each component in the lot with the established acceptance criteria above applied.

D. Wall thickness reports are to be submitted for the required components for each heat/lot used for spool fabrication. The report shall contain each heat/lot along with sample results. In addition, the applicable bulk pipe and butt-weld fitting wall thickness report is to be linked to every pipe and fitting on each extended spool sheet or referenced on each extended spool sheet where that heat/lot of pipe or butt-weld fittings has been used. The term "butt-weld fitting" includes elbows, tees, reducers, caps, laterals, crosses, butt-weld reinforced fittings and swages; however, it excludes socket weld nipples, fittings and flanges. Additionally, the side wall and crotch thickness of ASME B16.9 tees shall be included in the submitted reports.

E. Reports are to be submitted for verification of gasket and seal (including O-rings) functionality according to the following acceptance criteria:
   1. Part description shall be confirmed per the call out of the applicable pipe material class.
   2. Material composition per the applicable pipe material class shall be established via chemical analysis. Where the analysis can only be established by destructive testing, a randomly selected set may be used from the same heat/lot.
   3. Durometer hardness shall be +/- 5 of the specified value on the Shore A scale. For gaskets whose cross section is too small to perform a Shore A test, an alternative test shall be recommended and conducted by the VENDOR. Where the durometer can only be established by destructive testing, a randomly selected set may be used from the same heat/lot.
   4. Surfaces shall be free from protruding foreign material and be free of surface defects as determined by visual examination.
   5. Dimensional tolerances shall be compliant as specified in manufacturer's data and as identified by the specified dimensional standard.

F. The VENDOR shall be responsible for ensuring that all requirements set forth in this specification have been satisfied.

G. Nonconforming material shall be physically segregated from acceptable items when possible and shall be in strict accordance to the Quality Assurance section of this document.

H. Nameplates shall be fully visible when the equipment is in an operating condition.

3.6.18.4.12 Hold Points

A. The following verification points are required by this section, at a minimum, the following witness and hold points shall apply:

Table 3-11 Piping Hold Points

Verification Point Description	Type of Verification
Prior to Fabrication	Hold
Prior to Initial Production Welding (First Weld*)	Hold
Prior to Shop Bends	Hold
Prior to Testing	Witness
Prior to Valve Restoration	Witness
Prior to Inspections	Witness
Prior to Acceptance Testing	Hold
Prior to Shipping	Hold

*First weld strike for each weld process

B. The VENDOR shall provide required notifications of verification points and shall not proceed past required hold points without written authorization from the BUYER QA representative.
C. The BUYER's inspector shall be notified in advance of shipment. The shipment shall be placed on hold until BUYER's inspector:
   1. Performs a walk-down to verify that the work is in accordance with the Piping and Instrumentation Diagrams (P&IDs), drawings and this specification.
   2. Verifies marking and identification is in accordance with marking and identification requirements.
   3. Visually examines items that are accessible without disassembly for general workmanship, cleanliness and quality.
   4. Verifies PMI and documentation is in accordance with this specification.
   5. Verifies packaging and shipping preparation to ensure compliance to this specification.
   6. Verifies that each component of the packing list is included in the shipment.

3.6.18.4.13 Pre-installation Inspection

A. Each pipe spool, valve, threaded opening and gasket surface shall be closely inspected for damage and internal cleanliness immediately prior to installation of piping.

3.6.18.4.14 General

All piping, including tubing, shall be installed in accordance with the following requirements:

A. All piping shall be installed in accordance with the requirements of both ASME B31.3 and this specification.

B. All piping shall be installed in a neat, rectangular form. Special attention shall be given to securing a neat appearance. All piping shall generally be installed perpendicular or parallel to the major equipment, building structure, and floor levels.

C. Valves used for control shall be installed in such a manner that they can be operated from the main operating floors, platforms or remotely.

3.6.18.4.15 Pipe runs which require drainage shall be installed so that they pitch toward the point of drainage. Lines shall have a minimum sloped at 1/40 unless otherwise directed by the P&IDs and DPDs.

3.6.18.4.16 Thermal Expansion

A. All piping shall be installed as dimensioned on the design documents so that excessive or destructive expansion forces will not exist either in the cold condition or under conditions of maximum temperature.

B. Expansion joints and supports requiring regular inspection and maintenance (e.g. spring cans) are prohibited in module piping systems requiring remote access.

3.6.18.4.17 Cutting and Drilling Structures

A. Drilling, cutting, and patching of structures required for proper installation of piping or bolts shall be performed only when shown on the drawings or only with permission of the BUYER.

B. Penetrations through concrete shall be provided with sleeves and packing as specified per structural design documents.

3.6.18.4.18 Equipment and Jumper Connections

A. When attaching piping to equipment and removable jumper connections, special care shall be taken that excessive stresses are not transmitted to, and imposed upon, such connections.

B. The BUYER's Inspector shall be allowed to witness the installation of all such connections. At the BUYER's discretion, the BUYER may disallow any connection that may cause excessive loading. Piping connections to jumpers shall provide for repeatable successful fit-up demonstrations (i.e. jumpers are remotely installed and removed). See Section 3.6.19 for jumper requirements.

C. Heating to accommodate minor fit-up problems is not allowed.

3.6.18.4.19 Piping Tolerances

A. Refer to the Fabrication Tolerance and Alignment section of this specification for tolerance requirements.

B. No cold springing, unless specified on drawings, will be allowed for piping fit up. Improperly fitted piping shall be removed and replaced as directed by the BUYER at the VENDOR's expense.

3.6.18.4.20 Flange Joints

A. Gaskets and flange faces shall be protected from damage until installation is complete.
B. When temporary makeup at flanged joints is required in systems using special (e.g., GPT Linebacker®, spiral wound, etc.) gaskets, the joints may be made up with less expensive sheet gaskets and the special gaskets saved for the final installation.
C. Special care shall be taken during the installation of the GPT Linebacker® gaskets so that the gasket is not rendered ineffective by misalignment and/or overstressing.
D. Protective grease, paint, and other foreign material shall be cleaned from flange gasket faces prior to positioning the pipe spool for bolt up. Re-facing or repair of damaged flange facing shall not be permitted.
E. Bolt threads shall be coated with a Teflon lubricant. Flanges shall be made up by tightening diametrically opposite bolts in succession to load the gasket evenly or as directed by the manufacturer.
F. When a flanged joint has been made up and subsequently loosened, a new gasket shall be installed prior to retightening the joint.

3.6.18.4.21 Torque Requirements

A. Bolt tension/Torque requirements for flange connections shall be in accordance with the gasket manufacturer's recommended torque requirements necessary to seat the gasket without overstressing the bolts.
B. Calibrate torque wrenches daily with a wrench calibrator.
C. Hydraulic Tensioners shall be used on flanges that make up fabricated module piping identified as FQA/EQA. Care shall be taken to seat the gasket without overstressing the bolts or over compressing the gasket.

3.6.18.4.22 Valves

A. All valves shall be installed in strict accordance with the manufacturer's recommendations.
B. The resilient seats or sleeve of valves are very susceptible to damage from heat during welding. The manufacturer's recommendations shall be followed when installing such valves in order to prevent seat or sleeve damage.

3.6.18.4.23 Pipe Supports

A. Support components in contact with the pipe shall be of a material similar to the pipe and suitable for the operating temperature of the pipe.
B. Other hangers/supports shall be the type and model numbers called out on the piping isometric drawing (if provided) and meet additional requirements and installation details stated on the standard support details.
C. For lines where there is no isometric drawing or the isometric drawing does not call out a support type the supports shall be Anvil International or equivalent and meet the general requirements set forth in the standard support details in MSS SP-58.
D. The application and spacing of pipe hangers and supports shall be in accordance with the applicable ASME B31.3 and MSS SP 58 when this information is not shown on the drawings.

E. Welding of pipe supports to structural steel framing shall be performed according to structural specifications, and the quality of welding shall be at least equivalent to that provided by the applicable AWS Welding Code. All welds shall run parallel to the axis of the beam span and all welding shall be staggered with cooling allowed between subsequent deposits.
F. All hangers shall be fabricated and installed in accordance with MSS SP 58.
G. Supports which are located on AFC drawings shall not be relocated or reoriented without the BUYER's approval.
H. All weldments of supports to piping shall be made prior to PWHT.
I. Hangers shall be readjusted during start up as required by the BUYER.

3.6.18.4.24 PMI

A. This section prescribes the requirements for PMI for pressure-containing components to:
   1. Verify that the nominal composition of alloy components are of acceptable chemical composition independent of any certificate and marking that may exist.
   2. Assure that correct alloy materials are used at the places where intended.
B. General
   1. PMI shall be performed as close to the actual final installation as practical and prior to module shipment to ensure installation of the proper materials.
   2. Components shall not be disassembled, and welds shall not be excavated to perform PMI. PMI may not be possible at final installation due to the lack of accessibility of components or welds requiring PMI. Inaccessible items requiring PMI shall be tested at the appropriate time during the fabrication or assembly process.
C. Extent of PMI
   1. The extent of PMI examination shall be applied to all alloy pressure-containing components that make up fabricated module piping identified as FQA/EQA. All pressure-containing parts shall be 100% verified, with the exception of bolting. PMI examination of bolting samples shall be completed for each heat/lot used for spool fabrication and shall meet the "Normal Sampling Plan" per Report TR-017218-R1 Table 2-1.
   2. PMI requirements for shop fabricated spools that are shipped to the field will occur in the field.
   3. This shall consist of a minimum of one test point for each pressure piping component of module piping. This includes each:
      a. Plate, pipe length, pipe fitting (elbows, olets, tees, reducers, etc.), flange, blind, special component, pipe nipple, solid metal gasket, bolting, etc.
      b. Pressure containing weld. Welds exceeding 48" in length shall include one additional test point for every 48" weld length.
D. PMI Test Methods
   1. PMI, where required, shall be performed by one of the following methods:

a. Portable X-Ray Fluorescence spectrometers with direct reading of alloy grade or percentage of each element present
b. Optical Emission Spectrometry

2. Testing of any material grades not suitable for testing by the above methods shall be tested as agreed upon by the BUYER.
3. Other methods such as chemical spot testing, thermoelectric, mechanical methods etc. are not acceptable.

E. PMI Procedures
1. The VENDOR performing PMI shall submit a PMI testing procedure for approval by the BUYER. This specification shall be met as a minimum.
2. The VENDOR performing the PMI testing shall comply with the manufacturer's recommendations when calibrating and/or verifying the test equipment performance. Calibration shall occur daily at the start of work if possible.
3. The BUYER's Inspector shall be allowed to witness any or all PMI testing.

F. Personnel and Qualifications
1. Personnel performing PMI testing shall be certified in the operation of the equipment and the test method used by completing a training course approved by the manufacturer of the PMI test equipment. Personnel qualifications shall include certification and be submitted for review and approval by the BUYER.
2. Personnel using PMI equipment shall calibrate and maintain equipment in accordance with the manufacturer's specification.

G. Acceptance Criteria
1. All materials shall meet the chemical composition percentages specified in the relevant ASME II or ASTM material specifications as defined by the drawings. Alternatively, a match against the relevant reference spectra stored in the instrument, i.e. 316 stainless steel or 16Cr – 12Ni – 2Mo, is acceptable. The testing results shall fall within the chemical range while allowing for the accuracy of the machine.
2. If testing leads to the potential rejection of a component then the component shall be rejected and replaced or analyzed with a more accurate method for acceptance.
3. Component replacements shall undergo PMI and conform to the acceptance requirements.
4. The BUYER shall be notified of all rejected items and the reason for rejection.
5. If a component is rejected, all items within the lot should be considered suspect. A more extensive inspection shall be performed on the lot.
6. All rejected material, items and welds shall be marked and segregated.
7. CMTRs or CoCs should not be considered a substitute to PMI testing.

H. Materials Identification
1. Alloy materials are to be identified by their alloy designation (i.e. ASTM description) or nominal composition.
2. PMI test locations shall be marked, preferably with low-stress stamp or semi-permanent paint applied to each item. The marker shall not

contain additives such as aluminum, chlorides, sulfur, lead or zinc which may be detrimental to the material.

I. Documentation

1. VENDOR name (fabricator)
2. Specific job reference (PO#)
3. PMI procedure(s) and revision used
4. Testing date and location
5. Testing personnel and company performing the tests
6. Test equipment identification number or serial number
7. Date of calibration of the alloy analyzer
8. Recorded results of the tests for each item
9. Material specification and grade
10. Traceability (heat number and welding joint number)
11. Number of items examined
12. Documentation as described in API 578 Section 7.5.f and g.
13. Signature and date of the VENDOR's representative assuring compliance to the requirements of this specification
14. Signature and date by the BUYER's inspector verifying the review and acceptance of results

3.6.18.4.25 Pressure Testing

A. General

1. All piping shall be pressure tested in accordance with the requirements of the ASME B31.3 Code and this specification. All tests shall be documented by the VENDOR (refer to Appendix C).
2. VENDOR shall repair or replace any piping assembly that does not perform satisfactorily during BUYER's hydrostatic or pneumatic pressure tests as a result of defective workmanship by the VENDOR, or as a result of faulty materials supplied by the VENDOR.
3. A seat closure test shall be performed on all valves that have been welded in place. Testing is to be performed after all welding activities are complete. Seat closure tests shall be in accordance with ASME B16.34 for test pressure (gas not less than 80 psi) and test time utilizing the test methods in API 598. This shall be verified by hold point or source verification.

B. Pretest Inspection

1. All lines shall be thoroughly flushed prior to pressure testing, and prior to any automated valves being installed or pressure tested to prevent/minimize weld slag or other foreign material from damaging the valve trim. Other in-line instruments should also be removed or valved off prior to flushing.
2. The VENDOR shall place the system on hold and notify the BUYER in advance of when a piping system is ready for a pretest inspection.
3. The pretest inspection shall verify that all components in a piping system conform to the appropriate pipe material specification (e.g., material, wall thickness, valve numbers, valve ratings, flange ratings, etc.) and the latest revision of the appropriate P&IDs, and is ready for pressurization.

4. The BUYER's Inspector will inspect each piping system using a copy of Appendix A and subsequently notify the VENDOR of any problems that need to be corrected prior to pressure testing.
5. All joints shall be inspected by the BUYER's Inspector to ensure they have been assembled in accordance with the applicable Code and this specification. All joints shall be left uninsulated until testing has been completed if insulation is required.
6. All supports, shoes, guides and anchors shall be inspected by the BUYER's Inspector for proper type, installation and location. Spring supports shall also be inspected for correct cold setting, with the hot and cold settings permanently marked, and for freedom of spring movement. All springs shall be blocked in the cold location for pressure testing.
7. Pressure vessels, heat exchangers, prefabricated skid mounted process units, pumps, compressors and the miscellaneous items listed on Appendix B shall be isolated from piping systems that will be pressure tested unless approved for testing within the system by the BUYER. All control valves shall be installed and included in the pressure test with valves in the open position.
8. If a block valve is used for isolating test sections, the differential pressure across the valve seat shall not exceed the rated seat pressure.
9. All plugs and caps shall be inspected by the BUYER's Inspector to ensure that they comply with the appropriate pipe material specification.

C. Testing

1. Pressure testing personnel shall be qualified in accordance with the Piping Shop Quality Control section of this document.
2. The BUYER supplied piping Line List specifies which piping systems are to be pressure tested, the test pressure, and the test media. All pressure testing shall be done hydrostatically unless otherwise specified.
3. All shop tests shall be documented with a test report.
4. An initial service leak test is not permitted.
5. Vent and drain piping which is downstream of the last block valve and open to the atmosphere does not require pressure testing.
6. If there are in-line items (valves, sensors, relief valves, etc.) that are not designed for the test pressure replace items with a spool and test the whole pipeline. Decision shall be approved by the BUYER in the fabrication/test work control document prior to testing.
7. The quality of a test fluid shall not be detrimental to the equipment or the pipe system materials. Approval by the BUYER in the fabrication/test work control document shall be obtained before using any test fluid.
8. Water for testing equipment and piping containing austenitic stainless steel materials shall contain less than 50-ppm chloride ion.
9. Pneumatic testing shall be done with compressed air or nitrogen when pneumatic testing is approved by the BUYER. Unless otherwise approved by the BUYER in the fabrication/test work control document, pneumatic testing shall not be performed when any of the following conditions exist:

a. When the temperature of the piping system is less than 21°C (70°F).
b. The test pressure exceeds 110 psig.
c. The product of pressure (psig) times volume (cubic feet) exceeds 50,000.

10. Pressure gages and recorders shall be calibrated before tests. Pressure gages shall have a dial scale 4 ½" diameter, a range such that the test pressure is within 40% to 80% of the full scale and be calibrated within 2% at the full scale reading.
11. Unless otherwise approved by the BUYER in the fabrication/test work control document, pressure testing shall not be performed when the temperature of test fluid is less than 4°C (40°F).
12. Filter elements and strainers that may have been installed shall be removed from the system prior to pressure testing.
13. Equipment appurtenances such as level bridles, etc., shall be tested separately when the equipment is excluded from pressure testing.
14. The VENDOR shall verify that the status of all pressure relieving devices is as specified per Appendix B, and that all components included in the test can withstand the test pressure.
15. Each pipe system shall be observed to ensure that all supports, including spring supports, are not overloaded due to weight of the test medium. All spring supports shall have factory-installed travel stops installed during pressure testing.
16. If insulation is required, the VENDOR shall immediately remove or dry out any insulation that becomes wet during pressure testing. Reinstallation of previously wet insulation is subject to BUYER approval in the fabrication/test work control document.
17. Piping that is free of leakage for the duration of the specified tests shall be accepted.
18. Test diagrams or isometric drawings shall identify the test parameters. The drawing shall show actual configuration of piping, valves, etc. of the test.

D. Pressure Testing of Fully Welded Systems (Applicable for module piping only)

1. Where there's an inability to isolate a fully welded system for leak testing, temporary flanges may be welded and blind flanges installed or temporary weld caps may be welded to isolate the system. The system shall be hydrostatically tested. Upon successful testing in accordance with ASME B31.3, Para. 345, the temporary flanges or caps shall be cut off, and the ends shall be prepared, welded and piping system installed in accordance to this specification.
2. Other methods (e.g. test plugs or joints) to isolate the system are allowed, but the selected method shall fulfill all requirements of ASME B31.3 and be the most economical without damaging the pipe.

3.6.18.4.26 The final closure welds connecting piping systems or equipment which has been successfully tested shall be in-process examined per ASME B31.3, Para. 345.2.3(c) applying the visual examination method per ASME BPVC Section V. For "Safety Significant" closure welds, the root pass shall be PT

examined in addition to the in-process examination. Records of individual examinations are required. The weld shall pass with 100% radiographic examination in accordance with ASME B31.3, Para. 344.5 or 100% ultrasonic examination in accordance with ASME B31.3, Para. 344.6.

3.6.18.4.27 Repair of Leaks and Defects (Applicable for module piping only)

A. The VENDOR shall be responsible for repairing all leaks and the additional examination or tests required as a result of those leaks. Leaks shall be repaired as directed by the BUYER.
B. Defective joints shall be either removed or reworked as required by the BUYER.
C. Reworks shall be made in accordance with procedures approved by the BUYER.
D. Examination and/or inspection of a completed joint rework shall be as required for the original joint or by a BUYER approved alternate method which will ensure equal or greater soundness.

3.6.18.4.28 Restoration (Applicable for module piping only)

A. After successful completion of pressure testing, all lines shall be flushed and completely drained.
B. Oil, gas, air and chemical piping which has been either flushed or hydrostatically tested shall be thoroughly purged with air or nitrogen and dried to the satisfaction of the BUYER.
C. All valves that were closed during pressure testing shall be opened to ensure proper drainage of the bonnet cavity. All valves shall be partially opened and closed during the flushing operation to flush foreign material out of the system.
D. Care shall be exercised in draining vessels and piping so as not to create a vacuum. All vents within a system shall be opened prior to draining. After piping systems and vessels are completely drained, all vents and drains, and all other internals which were opened prior to testing shall be closed.
E. All temporary blanks and blinds shall be removed, and all valves, orifice plates, expansion joints, instrumentation and short pieces of piping which have been removed shall be reinstalled with proper gaskets in place.
F. The VENDOR shall restore, if required, all valves after successful pressure testing. Restoration of valves shall include the removal of any jacks; reinstallation of flappers, balls, plugs, pistons and sleeves, etc..., and the replacing of bonnet gaskets on valves that were disassembled. Restoration of valves shall be a BUYER witness point. The BUYER will sign the tag that was previously placed on the valve and indicate that valve is ready for operation.
G. After lines have been drained, temporary piping supports shall be removed. All restraining parts that were supplied with hangers and expansion joints for their protection when carrying the test loads shall be removed upon completion of the system test.

H. Flanged joints at which test blinds have been removed shall not be tested. Special length bolting and temporary gaskets shall be removed and replaced with line class bolts and gaskets.
I. Each system shall be connected to equipment where applicable and be ready for inspection. The terminal points of piping systems which are left for future connections shall be sealed with blinds or plugs.

3.6.18.4.29 Post Test Inspection (Applicable for module piping only)

A. The VENDOR shall place the system on hold and notify the BUYER in advance of when a piping system is ready for post test inspection.
B. The BUYER will inspect each piping system using Appendix C and subsequently notify the VENDOR of any problems that need to be corrected prior to operation.
C. The post test inspection shall verify that a piping system has been flushed, dried, restored, and connected to the satisfaction of the BUYER, and is ready for operation.
D. Pressure relief valves, spring hangers and expansion joints shall be inspected by the BUYER's Inspector to see that all shipping spacers and shipping ties have been applied.
E. Each valve and actuator assembly shall be cycled from full open to full closed and back to full open for verification of limit and torque switch function and setting, and the ability of the actuator to open and close the valve after the seat leakage test has been performed. Cycling of valve shall be done at maximum shut off delta P and design temperature. Valve travel stop settings shall be verified. BUYER shall witness test.

3.6.19 Jumper Fabrication

Jumpers shall be fabricated and tested in accordance with TFC-ENG-STD-22 Piping, Jumpers, and Valves and RPP-14541 Jumper Fabrication and Testing Specification for Tank Farms. For configuration of jumpers see DPDs.

Jumper Design requirements are:

A. Maximum 400 psig with a maximum temperature of 170 °F.

B. Non-metallic components including gaskets and seals shall be constructed of ultra-high molecular weight polyethylene (UHMWPE).

C. Associated PUREX nozzles both the connectors and the male connectors shall be provided by the BUYER. Pressure retaining components will be 316/316L stainless steel.

D. Consideration shall be given by the VENDOR to fabrication temperatures when taking critical dimensions for interfacing with connection points.

E. Any special equipment or tools necessary to operate or maintain the jumpers shall be included with the jumper procurement. Instructions and diagrams shall be included describing how to use the special equipment.

3.6.20 I&C Requirements

A. Valves shall be supplied by the BUYER with all actuators and accessories. VENDOR is responsible for verifying that valves received include all items and accessories listed on the applicable valve datasheet.

B. Deleted

C. Deleted

D. Deleted

E. Deleted

F. Deleted

G. Deleted

H. Deleted

I. Deleted

J. Deleted

K. Deleted

3.6.20.1 Deleted

L. Quantity, location and design of vessel thermowells will be specified on the applicable DPD and drawing 16-H-001920 sh 1.

M. The VENDOR should take all precautions to keep any fabrication debris from entering the thermowell. Final inspection shall include boroscope inspection of the thermowell to confirm cleanliness of the thermowell.

N. Deleted

3.6.20.2 Temperature elements are not within the scope of VENDOR and are to be furnished and installed by BUYER.

3.6.21 Electrical Requirements for Mechanical Equipment

3.6.21.1 Electrical General

A. VENDOR to design, furnish and ship equipment and materials in accordance with the requirements of this specification. VENDOR shall submit one copy of electrical drawings and documents required for the electrical installation in the mechanical package for review and approval prior to release of the unit for fabrication.
B. All electrical equipment shall be listed or labled as recognized by OSHA as a National Recognized Testing Lab (NRTL). See AVS quality clause B65.
C. Electrical equipment for which there is no listing category must be evaluated or tested using a method submitted to and approved by the BUYER prior to delivery of the equipment. A Field Evaluation performed by an NRTL prior to delivery is the preferred method for BUYER approval.
D. Drawings required will be as specified in the mechanical requisition but in general shall include, electrical schematics, junction boxes and equipment locations, wiring and connection diagrams, and cable routing, etc.
E. The BUYER will install and terminate all power, control and instrumentation cables connected between BUYER's remote equipment and the VENDOR provided

interface control, instrumentation and power junction boxes. BUYER will terminate all power cables for 460V motors directly from the motor controller to the motor junction box.

3.6.21.2 Grounding and Bonding

A. Skid-mounted packaged systems shall include threaded stud connectors at each end of the skid, diagonally opposite each other, sized appropriately to accept and connect No. 2/0 AWG stranded copper ground taps.

3.6.21.3 Electrical Shop Quality Control

3.6.21.3.1 Electrical equipment installed shall be in accordance with the following:

A. VENDOR shall furnish and prewire all components necessary for the complete and proper operation of the packaged equipment.
B. Motor starters and contactors shall not be furnished for mechanical equipment packages unless specifically requested in the mechanical package.

3.6.21.3.2 All devices requiring external connections shall be routed to terminals in junction boxes or control panels. Separate terminal boxes shall be provided for:

A. AC control circuits.
B. DC Analog, RTDs, digital signals or measurement circuits may occupy the same Instrument Terminal Box, but shall be terminated on separate terminal blocks. Shields shall be wired to separate terminal points.

3.6.21.3.3 460-Volt power and 208/120 Volt power circuits shall be wired to separate terminal boxes.

3.6.21.3.4 Testing and Inspection

A. VENDOR shall provide Factory Acceptance Tests that shall include, but not be limited to, complete functional test of all electrical components to insure that the packaged mechanical equipment performs its intended function.
B. VENDOR shall perform continuity test on all electrical circuits to verify all devices are installed and connected in accordance with drawings and/or specifications.
C. Meggering: Prior to terminating, test all power and control cable or wire 25 ft. or more in length for insulation resistance with megger (500 VDC megger for 300 volt insulation, 1000 VDC megger for 600 volt insulation). Any wire with less than 50 megaohms to ground or other conductors shall be replaced before proceeding with the terminating.
D. Tests shall be performed with calibrated instruments traceable to NIST or other nationally recognized standards.
E. VENDOR shall supply documented evidence of testing.

F. Refer to the procurement document or related mechanical equipment specification for additional requirements.

3.6.22 NPH Requirements

All components of the CFF system shall be in accordance with the NPH requirements given in this section, and the applicable seismic design criteria and limit states given in Table 3-1, Table 3-3, and Table 3-4 and the applicable datasheets.

3.6.22.1 Temperature

The design of SSC in particular systems, shall include the effects of stresses and movements resulting from variations in temperature. Whether located indoor or outside, SSC design shall consider the effects on the required Limit State of change in temperature from the maximum seasonal temperature change (-18°F to +115°F).

3.6.22.2 Seismic Requirements for SDC-1 and SDC-2

A. For SDC-1 and SDC-2 seismic demand is determined in accordance with ASCE 7, Chapter 13. The horizontal input is the ASCE 7 seismic force F_P, where horizontal S_{DS} = 0.588g, S_{D1} = 0.192g. For SDC-1 and SDC-2, the vertical seismic input is S_{DS} = 0.346g, S_{D1} = 0.098g.

B. The SSC equivalent Risk Category (RC) and Importance (I) factors for the required SDC and Limit State are as shown in the table below:

SDC	Limit State			
	A	B	C	D
1	ASCE/SEI 7-10 Risk Category II I = 1.0 $R_a = R^{(1)}$	ASCE/SEI 7-10 Risk Category II I = 1.0 $R_a = R/1.25$	ASCE/SEI 7-10 Risk Category II I = 1.0 $R_a = R/1.5$	ASCE/SEI 7-10 Risk Category II I = 1.0 $R_a \geq 1.0$
2	N/A	ASCE/SEI 7-10 Risk Category IV I = 1.5 $R_a = R$	ASCE/SEI 7-10 Risk Category IV I = 1.5 $R_a = R/1.2$ $R_a \geq 1.2$	ASCE/SEI 7-10 Risk Category IV I = 1.5 $R_a \geq 1.0$

[1]Note: R = Response Modification Coefficient given in ASCE/SEI 7-10, R_a = Actual (reduced) Response Modification Coefficient to be used in the design substituting R values given in ASCE/SEI 7-10 to account for the difference between the limit states achieved by ASCE/SEI 7-10 and the LS A, B, C, and D, as defined in ANSI/ANS-2.26-2004 and ASCE/SEI 43-05. ASCE/SEI 43-05, in Table C1-1, recognizes that Seismic Use Group (SG) I, SG II, and SG III of ASCE/SEI 7-02 (i.e., Risk Categories II, III, and IV, respectively, in ASCE/SEI 7-10) are equivalent to SDC-1 LS-A; SDC-1 LS-B; and SDC-2, LS-B, respectively. Also, it recognizes that SG III of ASCE/SEI 7-02 (i.e., Risk Category IV in ASCE 7-2010) is equivalent to SDC-1 LS-C. Thus, the ratio between LS A and B and between B and C are approximately 1.25 and 1.2, respectively. The R_a values given above are based on these ratios.

C. Damping for seismic qualification shall be as specified in ASCE 7.

D. Loads resulting from seismic events shall be considered to act concurrently with normal operating loads (dead and occasional loads, pressure, thermal, etc.) and shall be combined by absolute sum.

E. The exceptions of ASCE 7, Section 13.1.4 apply to mechanical and electrical SSC where all of the following criteria are met:
   1. Failure has no adverse interaction on safety SSC.
   2. Flexible connections are provided between the equipment and associated duct work, piping and conduit.
   3. SSC
      - weighs 20 lbs or less, or
      - weighs 400 lbs or less if center of mass is no more than 4 ft above floor level, or
      - is a distributed systems weighing 5 lb/ft or less

3.6.22.2.1 Methods of Qualification

For passive equipment, qualification of SSC for SDC-1 or SDC-2 events is most effectively accomplished by the static equivalent analysis method specified below. However, qualification may be by any (or a combination) of the three methods delineated below.

A. Analysis

Analysis in accordance with ASME QME-1, IEEE 344 or the code applicable to system or component is allowed for any SSC. Any of the following methods are acceptable for quantifying seismic response:

- Equivalent static method
- Response spectrum method
- Time history
- Complex frequency response method

B. Testing

Testing in accordance with IEEE 344, ASME QME-1 or ICC-ES AC156 may be used.

C. Experience Data/Similarity

Equipment may be qualified by similarity to previously qualified equipment. Qualification by similarity must address:

1. Materials, arrangement/configuration and dynamic similarity of the components.
2. Seismic input of previously qualified equipment must envelope the seismic design requirements of new components.

3.6.22.2.2 Acceptance Criteria

A. Structural integrity of SSC that is demonstrated by analysis shall be in accordance with ASCE 7 and IBC:

1. For all equipment and components, piping and supports, HVAC and supports, and raceway systems, the criteria of AISC 360 may be used.
2. Alternatively, the code applicable to the specific SSC, i.e., B31.3 for piping, may be used.

B. Deleted

3.6.22.3 Seismic Requirements for SDC-3

The SDC-3 seismic input shall consist of in-structure response spectra (ISRS) for the structures at the elevations at which the SSC are mounted. Damping for seismic qualification shall be as specified in ASCE 43, Table 3-2.

Loads resulting from seismic events shall be considered to act concurrently with normal operating loads (dead and occasional loads, pressure, thermal, etc.) and shall be combined by absolute sum.

3.6.22.3.1 Methods of Qualification

The seismic qualification of SSC for SDC-3 shall be by one (or a combination) of three methods as delineated below.

A. Analysis

Analysis in accordance with ASME QME-1, IEEE 344 or the code applicable to system or component is the preferred method for passive mechanical equipment and distribution systems, and for electrical distribution systems. Preliminary quantitative analysis performed in accordance with the applicable code shall demonstrate that the Demand to Capacity ratio of any component does not exceed 0.9. Any of the following methods are acceptable for quantifying seismic response:

1. Equivalent static method
2. Response spectrum method
3. Time history
4. Complex frequency response method

B. Testing

Testing in accordance with IEEE 344, ASME QME-1 or ICC-ES AC156 is the preferred method for qualification of active mechanical and electrical equipment, and instruments and controls. The seismic input for qualification by testing, the Required Response Spectrum (RRS), shall exceed the applicable ISRS by a factor of 1.4:

RRS > 1.4 x ISRS

C. Experience Data/Similarity

Equipment may be qualified by similarity to previously qualified equipment. Qualification by similarity must address:

1. Materials, arrangement/configuration and dynamic similarity of the components
2. Seismic input of previously qualified equipment must envelope ISRS of new components

3.6.22.3.2 Acceptance Criteria for Limit States

A. ASCE 43 Section C8.0 and Table C8.1 provide guidance for acceptable codes and standards for qualification by analysis for all types of SSC for SDC-3 seismic loads.
B. Alternatively the following guidance may be followed.

1. Limit State A - For all equipment and components, piping and HVAC supports, and raceway systems, the requirements of ASCE 43 will be imposed.
2. Limit States B, C and D – The following alternative criteria may be used instead of those codes recommended in ASCE 43 Table C8.1:
   a. Piping and valves (excluding non-manual operators) – B31.3
   b. Pressure Vessels – All vessels may be in accordance with ASME BPVC, Section VIII, Div. 2.
   c. Tanks – The governing code for tanks referenced in ASCE 43 may be supplemented by BNL-52361. For the seismic analysis of tanks, the recommendation of ASCE 4 shall be followed.

3.6.22.3.3 Other Requirements

Seismic qualification of SSC must address the end-of-life condition. The SSC qualified life considerations depend on the qualification method. For example:

A. Testing – Determine the need for evironmental qualification for effects such as degradation of non-metallic materials in high temperature or radiation environments.
B. Analysis – Deduct corrosion allowance when calculating stresses. Address degradation mechanisms beyond general wall thinning such as cracking and fatigue
C. Jumper nozzle deflections to be limited to a maximum deflection of +/- 1/16".

3.6.22.3.4 In-Structure Response Spectra

A. Final Response Spectra for the vaults/pits is being developed and will be provided to VENDOR when available. Preliminary data is provided in Table 3-12 Preliminary Response Spectra for design development.

B. The VENDOR shall provide reaction forces and moments for all equipment support locations for dead, operational, thermal, and seismic loads. The VENDOR shall also supply forces, moments, displacements and rotations for all pipe interfaces for sustained, operational, thermal and seismic load conditions.

Table 3-12 LAWPS Free Field (Ground Surface Level) Response Spectra

Frequency	Spectral Acceleration (g)		Frequency	Spectral Acceleration (g)		Frequency	Spectral Acceleration (g)	
	Horizontal	Vertical		Horizontal	Vertical			
100	0.293	0.2135	5.882	0.7838	0.468	1.111	0.2954	0.1528
58.824	0.2937	0.214	5.75	0.7941	0.468	1.053	0.2769	0.1427
50	0.294	0.2142	5.556	0.7941	0.468	1	0.2603	0.1336
40	0.2943	0.242	5.263	0.7941	0.468	0.909	0.2351	0.1235
33.333	0.2967	0.2692	5	0.7941	0.4593	0.833	0.2141	0.1149
30.303	0.3129	0.285	4.545	0.7941	0.4436	0.769	0.1965	0.1075
25	0.348	0.3193	4.167	0.7941	0.4297	0.714	0.1815	0.1011
23.81	0.3576	0.3288	4	0.7941	0.4233	0.667	0.1686	0.0955
22.727	0.367	0.338	3.846	0.7941	0.4173	0.625	0.1573	0.0906
21.739	0.3761	0.347	3.571	0.7594	0.4061	0.588	0.1474	0.0861
20.833	0.3852	0.356	3.333	0.7294	0.396	0.556	0.1387	0.0822
20	0.3937	0.3644	3.125	0.7011	0.3804	0.526	0.1309	0.0786
18.182	0.4143	0.3849	2.941	0.6756	0.3664	0.5	0.1239	0.0753
16.667	0.4342	0.4048	2.778	0.6524	0.3536	0.455	0.1088	0.0676
15.385	0.4533	0.4239	2.632	0.631	0.3419	0.417	0.0967	0.0613
14.286	0.4727	0.4433	2.5	0.6115	0.3311	0.385	0.0867	0.056
13.333	0.4916	0.468	2.381	0.5935	0.3212	0.357	0.0784	0.0515
12.5	0.5085	0.468	2.273	0.5768	0.3121	0.333	0.0714	0.0476
11.765	0.5265	0.468	2.174	0.5613	0.3036	0.313	0.0654	0.0443
11.111	0.5441	0.468	2.083	0.5469	0.2957	0.294	0.0603	0.0414
10.526	0.5612	0.468	2	0.5334	0.2882	0.278	0.0557	0.0387
10	0.578	0.468	1.818	0.497	0.2667	0.263	0.0518	0.0365
9.091	0.6105	0.468	1.667	0.4644	0.2476	0.25	0.0483	0.0344
8.333	0.6418	0.468	1.538	0.4363	0.2312	0.238	0.0452	0.0326
7.692	0.6719	0.468	1.429	0.3993	0.2105	0.227	0.0424	0.0309
7.143	0.7011	0.468	1.333	0.3676	0.1928	0.217	0.04	0.0295
6.667	0.7294	0.468	1.25	0.3402	0.1775	0.208	0.0377	0.028
6.25	0.757	0.468	1.176	0.3163	0.1643	0.2	0.0357	0.0268
6	0.7749	0.468						

3.6.22.3.5 Requirements for Qualification Methods

1. Methods

A. Dynamic Analysis

The dynamic analysis shall be accomplished using the response spectrum, frequency domain or time-history approach. Time-history analysis shall be performed using either the direct integration method or the modal superposition method.

B. Equivalent Static Analysis

Equivalent static analysis method may be used in lieu of a dynamic analysis if the system or component can be realistically represented by a simple model. A static analysis shall be performed by applying equivalent static forces at the mass locations in two principal horizontal directions and the vertical direction. The equivalent static force at a mass location shall be computed as the product of the mass and the seismic acceleration value applicable to that mass location. The seismic acceleration values shall be as follows:

Single Mode Dominant Response: When the mass associated with a mode exceeds 75% of the total mass, the response is considered as a single mode dominant response. In this case, the acceleration value corresponding to the dominant mode frequency from the applicable in-structure response spectrum shall be used, provided the value of the dominant mode frequency is equal to or greater than the value of the frequency corresponding to the peak acceleration. In case the value of the dominant mode frequency is less than the value of the frequency corresponding to the peak acceleration, the peak value of the in-structure response spectrum acceleration shall be used.

Multiple Mode Dominant Response: 1.5 times the peak acceleration value of the applicable in-structure response spectrum shall be used.

Total Seismic Response: The total seismic response shall be computed by combining the co-directional responses from the two horizontal and the vertical analyses by either the SRSS method, or the Component Factor Method (1/0.4/0.4).

C. Seismic Qualification of Equipment by Testing

Testing procedures presented in IEEE Standard 344 shall be followed. The actual mounting of the equipment shall either be simulated or duplicated. All normal loads acting on the equipment shall be simulated. The seismic load shall be defined by the Required Response Spectrum (RRS) obtained by enveloping and smoothing (filling in valleys) the in-structure spectra computed at the supports of the equipment by linear elastic analyses, and multiplied by a factor of 1.4. The Test Response Spectrum (TRS) of the shake table shall envelop the RRS.

Recommended Frequencies: The fundamental frequencies of equipment and components shall preferably be less than one-half or more than twice the dominant frequencies of the support structure.

2. Modeling

A. Equipment

Unless a more complex model, e.g., a finite element model, is required, the equipment shall be represented by a lumped-mass system consisting of discrete masses connected by weightless springs. The criteria used to lump masses shall be as follows:

The number of masses shall be chosen so that all significant modes are included. The modes are considered as significant if the corresponding natural frequencies are less than 33 Hz and the stresses calculated from these modes are greater than 10% of the total stresses obtained from lower modes. This approach is acceptable provided at least 90% of the loading/inertia shall be contained in the modes used. Alternately, the number of degrees of freedom is taken more than twice the number of modes with frequencies less than 33 Hz. Missing mass shall be accounted for in developing the design forces and moments.

Mass shall also be lumped at the following points:

- Where a significant concentrated weight is located (e.g., the motor in the analysis of pump motor stand, the impeller in the analysis of pump shaft, etc.).
- Where there is a significant change in either the geometry or stiffness

B. Piping

The piping system shall be modeled as an assemblage of pipe elements supported by hangers, guides, anchors, and struts. Pipe and fluid masses may be lumped at the nodes and connected by weightless elastic beam elements, which reflect the physical properties of the corresponding piping segment. The node points shall be selected to coincide with the locations of large masses, such as valves, pumps and motors, and with locations of significant geometry change. All pipe-mounted equipment, such as valves, pumps and motors, shall be modeled with lumped masses connected by elastic beam elements, which reflect the physical properties of the pipe-mounted equipment. The torsional and bending effects of valve operators and other pipe-mounted equipment with offset centers of gravity with respect to the piping centerline shall be included in the model. On straight runs, mass points shall be located at spacing no greater than the span which would have a fundamental frequency equal to 33Hz, when calculated as a simply supported beam with uniformly distributed mass.
Anchors at equipment such as tanks, pumps and heat exchangers shall be modeled with calculated stiffness properties. Only the mass effects of in-line equipment with a fundamental frequency of 33 Hz or greater shall be included in the piping system

model. Otherwise, a simplified model of the in-line equipment shall be included in the piping system model.

C. Multiple Supported Systems and Components

The inertial response shall be calculated using an upper bound envelope of individual response spectra for the support locations. The relative seismic support displacement, i.e., seismic anchor motion, shall be computed. The response from the relative seismic support displacement analysis shall be combined with the response from the inertial loads by the SRSS method. In lieu of the response spectrum approach, time histories of the support motions may be used.

4 QUALITY ASSURANCE

All specific requirements of ASME NQA-1 Part I and Part II that apply to this procurement shall be identified in the VENDOR's QAP.

4.1 General

4.1.1 This section delineates the quality assurance (QA) requirements and processes that will be utilized to execute this contract. Additional QA requirements may be delineated in the design documents and other contractual documents. For a listing of applicable quality clauses see Table 4-1 Procurement Quality Clauses.

4.1.2 The VENDOR agrees to incorporate the appropriate QA requirements of this section and those requirements specified elsewhere in the contract into their subcontracts and purchase orders for all lower-tier VENDORs and suppliers utilized in the performance of this contract, as the QA requirements apply for the services or items being provided. The VENDOR shall communicate these QA requirements to their personnel, suppliers, and lower-tier VENDORs so that items and work activities provide for safe and reliable construction.

4.1.3 The VENDOR shall provide access to its facility, documents and records, applicable to the performance of this contract for BUYER's review and assessment. The VENDOR shall flow down this "right of access" requirement to its sub-tier VENDORs and suppliers. The VENDOR shall coordinate the review or assessment of sub-tier VENDORs' and suppliers' facilities, documents and records with the BUYER.

4.1.4 The VENDOR is required to have and use a quality assurance program that is consistent with the requirements of ASME NQA-1 in accordance with quality clause B04, Quality Assurance Requirements for Nuclear Facility Applications, including applicable addenda requirements that are identified in the statement of work (SOW) for this contract. The VENDOR's QA program will be reviewed, evaluated, and approved for BUYER through an onsite audit and has been added to their Evaluated Supplier List (ESL) prior to award of the contract.

4.1.5 The BUYER will co-ordinate with the VENDOR to conduct scheduled and periodic oversight of activities or products associated with this scope of work.

4.1.6 For pressure vessel, the VENDOR shall maintain a ASME BPVC Division 1 certified program in accordance with quality clause B07.

4.1.7 Nonconformance documentation and reporting shall be in accordance with quality clause B22.

4.1.8 Personnel performing weld inspections shall be certified in accordance with quality clause B25.

4.1.9 Nondestructive weld examination personnel shall be qualified in accordance with quality clause B31.

4.1.10 All required instruments and equipment shall be provided with a Certificate of Calibration in accordance with quality clause B61.

4.1.11 Inspections and test reports shall be in accordance with quality clause B52.

Table 4-1 Procurement Quality Clauses

PREAWARD AND SUPPLIER FABRICATION	
B01	Quality Assurance Program Submittal and Pre-award Survey
B04	Supplier Quality Program Evaluation
B07	Certified Quality Program
B12	Supplier Use of Calibrated Equipment
B13	Fabrication/Inspection/Test Plan
B14	Supplier Use of Software Controlled Instruments and Equipment Containing Embedded Software (Firmware)
B15	Supplier Use of Commercial off the Shelf Software
B18	Supplier Use of Spreadsheet Calculations Using Commercial off the Shelf Software
B22	Nonconformance Documentation and Reporting
B25	Certified Weld Inspector (CWI)
B28	Welding Procedures and Qualifications
B31	Nondestructive Examination Process
MATERIAL IDENTIFICATION	
B33	Identification of Items with Product Data Sheet
B37	Identification and Traceability of Items
TESTING AND TEST DATA	
B46	Liquid Penetrant Material Certification
B49	Certified Material Test Report
B52	Inspection and Test Report
B58	Calibration Report
B61	Certification of Calibration
B65	Nationally Recognized Testing Laboratory (NRTL) Listed or Labeled
INSPECTION AND ACCEPTANCE CRITERIA	
B76	Procurement of Potentially Suspect or Counterfeit Items
B82	Recommended Spare Parts Listing

Note: Full text of each quality clause is provided in contract documents.

4.2 QA Submittals

4.2.1 VENDOR shall submit a Quality Assurance Program (QAP) in accordance with quality causes B01 and B04. [Approval Required]

4.2.2 VENDOR shall submit changes to the VENDOR QAP. [Approval Required]

4.2.3 VENDOR shall submit to the BUYER, VENDOR-generated nonconformance reports, having proposed dispositions of "REPAIR", or "USE-AS-IS". NCRs having REPAIR or USE-AS-IS proposed dispositions shall not have the proposed disposition implemented until the BUYER has agreed in writing with the VENDOR's proposed disposition. [Approval Required]

4.2.4 VENDOR shall submit to the BUYER, VENDOR-generated nonconformance reports upon completion and closure of the approved disposition implementation. [Approval is NOT REQUIRED for "REJECT" or "REWORK" dispositions. Approval is REQUIRED for "REPAIR" or "USE-AS-IS" dispositions.]

4.2.5 VENDOR shall submit Fabrication Work Control Documents prior to starting fabrication work. [Approval Required]

4.2.6 VENDOR shall submit completed Fabrication Work Control Documents as soon as the work and documentation are complete. [Approval Required]

4.3 Quality Assurance Requirements

4.3.1 VENDOR Design

Design calculations shall be provided to the BUYER for review incorporating preliminary in-structure response and subsequently for final approval having incorporated the final LAWPS Site-specific in-structure response approval prior to initiating the final design. Engineering calculations and analysis shall be fully checked by a qualified individual other than the originator, and shall be signed and dated as checked. All final submittals of calculations shall be bound and shall include the title and purpose of the calculation, a table of contents or index, complete list of references, design basis and complete list of assumptions (if any), methodology, and sufficient information to allow independent verification of the calculation. VENDOR shall follow quality clauses B15 and B18 as applicable.

The VENDOR shall implement and maintain a quality assurance program in accordance with applicable requirements of NQA-1 for control of software used for calculation or analysis where the results are not checked by alternate methods (including as applicable for Safety Software Part II Subparts 2.7 and 2.14, and DOE O 414.1D Attachment 1.

4.3.1.1 The VENDOR shall identify the software and version used or applied with each document, calculation, and/or analysis which shall be traceable to a documented verification and validation.

4.3.1.2 Verification and Validation of software used for safety significant calculations shall be documented covering the range of the results and shall be conducted in accordance with the applicable QA program. A copy of the verification and validation package shall be provided for each software used to prepare safety significant calculations.

4.3.1.3 The BUYER shall define the quality assurance (QA practices) methodology applied during activities utilizing software. The VENDOR shall identify what industry standard or commercial practice methodology is followed for the design, development, testing, and change control of their software.

4.3.1.4 The VENDOR shall describe the process for reporting and documenting software problems/errors, evaluating impacts of problems on measurements and uses, and determining the appropriate corrective action(s).

4.3.1.5 When subcontracting any portion of this specified work, the VENDOR is required to invoke the applicable quality assurance program requirements on their supplier(s) and evaluate and qualify suppliers in accordance with these QA requirements. The BUYER reserves the right to verify the quality of work at the VENDOR's facility, including any supplier facilities.

4.3.1.6 All revisions to submitted calculations, as a result of comments by the BUYER or design changes by any sub suppliers, however minor, shall be resubmitted.

4.3.2 Electrical Equipment Requirements

Electrical equipment must be listed or labeled by a Nationally Recognized Testing Laboratory (NRTL) listed by Occupational Safety and Health Administration (OSHA); or equipment without a listing mark or label by a nationally recognized testing laboratory can only be approved for use if accepted by a BUYER designated NEC inspector. All proposed unlisted electrical equipment shall be submitted to the BUYER on an RFI for approval.

4.3.3 Inspection and Testing

4.3.3.1 Inspections and testing including the documentation required by the contract shall be performed by qualified VENDOR Quality Control personnel or third party, who is independent of the work being performed. Quality Control personnel or third party shall be trained and qualified in accordance with the VENDOR's or third party approved QAP.

4.3.3.2 The VENDOR shall develop and submit work control documents (e.g., fabrication, inspection, and test plans) for items to be fabricated by the VENDOR or their lower–tier supplier in accordance with quality clause B13. The work control document shall delineate details for performing the fabrication including inspections and testing required by the contract. The BUYER will identify BUYER's required inspection points, include third party inspections, during review of the work control documents.

4.3.3.3 The VENDOR shall submit completed fabrication work control documents to BUYER for approval. The VENDOR shall perform a final acceptance review to verify that all steps have been completed and that required documentation (e.g., weld records, installation inspection reports, material inspection reports, pressure test reports, coating inspection reports, continuity resistance test, megger tests, etc.) has been included. Final acceptance shall be signified by signature and date on the work control document.

4.3.3.4 When BUYER's verification points are identified in the contract documents or the work control document, the VENDOR shall provide at least 2 working days advance notice. Verification points associated with testing activities shall require a 10 working day advance notice unless otherwise specified.

NOTE: A BUYER's "hold" point may be waived by correspondence (e.g., e-mail) from the BUYER, which will be included with the work control document.

4.3.4 Receipt Inspection

4.3.4.1 VENDOR's procured permanent plant items shall be receipt-inspected by the VENDOR in accordance with their inspection plan prior to delivery to the work site. Items may be receipt-inspected at the site shops but prior to delivery at the installation area.

NOTE: Special receipt inspection requirements apply to VENDOR-procured items that are designated by the BUYER as FQA/EQA. See Section 4.4, Acceptance Criteria, of this section for details.

4.3.4.2 When VENDOR fabricates BUYER permanent plant items, the Fabrication Work Control Document shall identify the final inspection(s) necessary for the BUYER to accept the fabrication. The BUYER's inspection personnel shall perform final inspection(s). The BUYER's inspection personnel shall indicate final acceptance of the fabricated item on behalf of the BUYER. Normally, application of an acceptance tag will indicate acceptance and authorize the VENDOR to install the fabricated item.

4.3.4.3 When BUYER permanent plant items are provided, the VENDOR shall inspect and document all furnished items prior to accepting custodial responsibility. Discrepancies identified during inspection shall be immediately brought to the BUYER's attention. The inspection shall include as applicable:

- Labels, tagging and/or general identification of items.
- Quantity of items received.
- Any visible damage to packaging (e.g., water marks, oil stains, crushed container, etc.).
- Any visible damage to items (e.g., corrosion, scaling, cracks, broken pieces, obstruction or damage to rotating equipment, etc).
- Condition of visible coatings and/or paint.
- Protective covers and seals installed.
- Cleanliness of items.
- Verification of dimensional characteristics

4.3.5 Noncompliances and Nonconformance

4.3.5.1 The VENDOR shall assure that services and processes that do not meet the requirements of the contract are identified, mitigated or controlled, and corrected. Noncompliances that have significant cost, schedule, quality, safety, health or environmental implications shall be investigated to determine the extent of the noncompliance and its causes.

4.3.5.2 The VENDOR shall verify that actions taken to correct noncompliances are complete and adequate to prevent recurrence. The relevant responses, actions required, verifications, and other documentation shall be transmitted to BUYER upon closure.

4.3.5.3 The VENDOR shall either correct nonconforming items immediately, or control them to prevent inadvertent use, installation, or testing.

4.3.5.4 The VENDOR shall control nonconforming items by segregating affected items in a clearly identified and designated hold area, marking or tagging the items to indicate they are nonconforming, or instituting other measures approved by BUYER.

4.3.5.5 The VENDOR shall notify BUYER whenever nonconforming items cannot be restored to their original, specified condition (i.e., nonconformance dispositioned "REPAIR" or "USE-AS-IS").

4.3.5.6 In selected cases, nonconforming items may be conditionally released for work or installation provided the nonconforming condition is not affected and the corrective action can still be performed. The BUYER shall be notified of such cases to authorize a conditional release. Otherwise, nonconforming items shall not be released until corrective actions have been completed and verified.

4.3.6 VENDOR Procurement of FQA items/Materials

4.3.6.1 Items designated by the BUYER as FQA shall be procured by the VENDOR when contractually indicated to do so in the Statement of Work.

4.3.6.2 When FQA items or materials are available from an evaluated supplier on BUYER's Evaluated Supplier List (ESL), the procurement must be conducted strictly in the following manner.

A. The FQA item or material must be available from a supplier listed on the BUYER's ESL.

B. The FQA items or materials must be within the scope of provision of the ESL supplier, as indicated on the ESL (e.g., pipe is provided by pipe suppliers, not by structural steel suppliers).

4.3.6.3 When the FQA item or material is not available from a supplier on the BUYER's ESL, the FQA item or material must undergo a commercial grade item dedication. The provisions of ASME NQA-1 for Commercial Grade Items (CGI) shall apply to the VENDOR. The VENDOR shall be responsible for dedicating FQA items or materials under their own QA program.

To facilitate the procurement of items or materials that are intended to be dedicated, the VENDOR must submit their proposed procurement document to the BUYER for approval in accordance with Section 4.1.4 before ordering, in accordance with the following.

A. Critical characteristics for the item or material shall be formally identified on a BUYER-provided form (A-6002-544). A CGI dedication plan shall be prepared by the VENDOR and approved by the BUYER prior to VENDOR ordering items or material to be dedicated.

B. The VENDOR submits for BUYER approval a proposed procurement document specifying the FQA item or material, the intended supplier, the Quality Assurance requirements, the BUYER's safety classification, the procurement quality clauses to be invoked, and acceptance criteria at receipt.

4.3.7 Suspect/Counterfeit Parts

Items furnished for this subcontract shall not include Suspect/Counterfeit Items (SCI) in accordance with quality clause B76.

4.3.8 Measuring and Test Equipment

4.3.8.1 Measuring and Test Equipment (M&TE) shall be properly calibrated, maintained, and controlled in accordance with quality clauses B12, B14, and B61.

4.3.8.2 Perform calibration at specified intervals based on the type of equipment, required accuracy, frequency of use, stability characteristics, and other conditions affecting performance. Calibration shall have accuracy traceable to national standards (where they

exist), and calibration standards shall have the accuracy to ensure that the M&TE will have the required tolerances. Maintain records and mark equipment to show calibration status.

4.3.8.3 When M&TE is found to be out of calibration, the VENDOR shall have a method to identify its use since the last calibration and methods to re-verify acceptability of items previously tested.

4.4 Acceptance Criteria

A. All design, fabrication, and testing shall meet or exceed the acceptance criteria contained in this Specification and referenced codes and standards. Deviations from acceptance criteria shall be reported and resolved as described below.

B. The identification and definition of quality levels for LAWPS design & fabrication is provided on the DPDs, and equipment data sheets and defined below:

1. **Full Quality Assurance (FQA):** Level of controls applied for items services, or processes that are commensurate with the controls invoked under ASME NQA-1 or other appropriate national consensus standard.
2. **Enhanced Quality Assurance (EQA):** Levels of controls for those items, services, or processes where, based on an evaluation of risk or nuclear safety, additional controls beyond the providers published or stated attributes of the item, service, or process are needed to verify critical attributes.
3. **Commercial Quality Assurance (CQA):** Level of controls for those items, services, or processes where, based on an evaluation of risk or nuclear safety, no additional quality controls beyond the providers published or stated attributes of the item, service, or process is required.

C. Methods used to accept an item or service shall be a Certificate of Conformance, source inspection, receipt inspection, Factory Acceptance Test (FAT), or post installation test on site, or a combination of these methods.

Certificate of Conformance:

1. The certificate shall identify the purchased material or equipment, such as by purchase order number.
2. The certificate shall identify the specific procurement requirements met by the purchased material or equipment, such as codes, standards, and other specifications. The procurement requirements identified shall include any approved changes, waivers, or deviations applicable to the subject material or equipment.
3. The certificate shall identify any procurement requirements that have not been met, together with an explanation and the means for resolving the nonconformance.
4. The certificate shall be signed or otherwise authenticated by a person who is responsible for the quality assurance function and whose function and position are described in the VENDOR's Quality Assurance Program.
5. The certification system, including the procedures to be followed in filling out a certificate and the administrative procedures for review and approval of the certificates, shall be described in the VENDOR's Quality Assurance Program.
6. Means shall be provided to verify the validity of the VENDOR's certificates and the effectiveness of the certification system.
7. Verification of VENDOR's certificates and certification system shall be conducted at intervals commensurate with VENDOR's past quality performance.

8. In certain procurement actions that do not involve source verification, an item or service may be accepted from a VENDOR based on a receiving inspection and a VENDOR's Certificate of Conformance stating that the specified requirements have been met and any specific supplemental documentation, such as material certificates or reports of tests performed, may be required by procurement documents. Acceptance by this method is satisfactory when the item or service is of simple design and involves standard materials, processes, and tests.

4.5 Verification

A. Design verification shall be performed to ensure the design adequately meets design criteria, the design is technically adequate, and the design meets applicable requirements for quality, safety, and performance. The VENDOR shall have responsibility for the performance and documentation of all design verifications associated with this specification.

   1. The equipment design shall be verified in accordance with the VENDOR's NQA-1 compliant design verification procedures. The BUYER will review and approve the VENDOR's design in the submittal review process.

   2. VENDORs developed multiple-use and single use spreadsheets shall be developed and verified in compliance with VENDORs NQA-1 compliant calculation verification procedures.

B. Provisions for involvement by an Independent Qualified Registered Professional Engineer (IQRPE) with the VENDORS's work to ensure appropriate certifications are available to support the environmental permitting process. WAC 173-303-640 (3)(a) states that, "Owners or operators of new tank systems or components must obtain a written assessment reviewed and certified by an IQRPE in accordance with WAC 173-303-810 (13)(a) attesting that the system has sufficient structural integrity and is acceptable for the storing and treating of dangerous waste". (Refer to complete WAC citation for all required elements of this certification). The IQRPE will need to review the completed design in order to prepare a written assessment. In addition, WAC 173-303-640(3)(c) states that, "The owner or operator of a new tank system must ensure that proper handling procedures are adhered to in order to prevent damage to the system during installation". Some inspections by an IQRPE may be required during the fabrication and assembly stage to identify potential defects "prior to covering or enclosing a new tank system." The IQRPE services are covered under an existing contract with the BUYER. The VENDOR will be required to accommodate the IQRPE to review the completed design, review fabrication planning documents to identify any IQRPE hold or witness points, and during execution of the required inspections.

4.6 Inspections and Tests

4.6.1 Factory Acceptance Test Plan/Test Procedures

VENDOR shall prepare a Factory Acceptance Test Plan/Test Procedures for each main equipment item: Filter Feed Tank, Filter Feed Pump, DST Return Pump, CFF Skid and Jumper assemblies including, but not limited to requirements from the following sections:

1. Section 3.6.12.10 Pump Inspection and Tests
2. Section 3.6.13.8.7 Vessel Acceptance and Testing
3. Deleted
4. Section 3.6.18.4.25 Pressure Testing
5. Section 3.6.19 Jumper Fabrication
6. Section 3.6.21.3.4 Testing and Inspection

4.6.2 Factory Acceptance Test Report

VENDOR shall prepare a Factory Acceptance Test Report with the results of the Factory Acceptance Tests per the Factory Acceptance Test Plan.

4.6.3 Functional Test Plan/Test Procedures

VENDOR shall prepare a Functional Test Plan/Test Procedure to cover operability and performance tests using clean chloride free water for system operation to confirm, but not limited to the following items listed below. All functional testing activities shall be performed at the VENDORS' facility.

A. Filter Skid
   1. Confirm filter flux rates of at least 4 to 20 gpm can be achieved through the filters by adjusting the pressure control valve PV101, and Flow control valves FV 183 & FV 136, with a filter transmembrane pressure between 7 and 100 psi. and using an individual filter tube flow rate at 14.7 ft/s
   2. Demonstrate back pulse cycle pressures do not exceed 70 psi over the tube inlet pressure while back pulsing with filter online.
   3. Confirm all jumper connections, including instrument jumpers, can be remotely disconnected and reattached.
   4. Confirm each CFF can be remotely disconnected and reattached and pressure tested using the seal test port to confirm no leakage at the flange seal. Record time period for each removal and replacement step.
   5. Provide a full pressure test of the complete skid assembly with all jumpers connected, process valves in open position, drain valves in closed position and open pipe ends capped.
B. FFT Tank and Pumps
   1. Confirm both the FFT Pumps can be remotely disconnected and reattached to the tank riser including removal and replacement of the pump jumpers. Record time period to complete each removal and replacement step
   2. Confirm removal and replacement of the 8 inch flow instrument
   3. Confirm no leakage of the 8 inch jumper connections after replacement
C. Valves
   1. Confirm all valves open and close over their full range without binding
   2. For all automated valves record open and close times
   3. Confirm position indicators Visual and Instrument show correct valve position

4.6.4 Functional Test Report

VENDOR shall prepare a Functional Test Report with the results of the Functional Test per the Functional Test Plan.

5 PREPARATION FOR DELIVERY

5.1 General

VENDOR shall receive, clean, package, store, preserve, handle, and ship Structures, Systems and Components to protect against physical damage, or any effect that would affect quality or cause deterioration at all times while items are located on the VENDOR's premises in accordance with ASME NQA-1-2008/2009A, Quality Assurance Requirements for Nuclear Facility Applications, Part II, Subpart 2.2. All components shall be classified as Level B Items. VENDOR shall submit a Packaging, Storage, Shipping, and Handling (PSSH). The PSSH plan shall include all plans, procedures, and drawings that address how items will be packaged, stored, shipped, and handled in accordance with the requirements described throughout this specification with the exception of topics covered by the Lift and Rigging Plan described in Section 5.5.

5.2 Preservation and Packaging

Methods of cleaning and preservation shall meet the requirements specified in ASME NQA-1 2008/2009A Part II subpart 2.1. Cleaning - Flush filter interior and associated piping and valves with water for 2 minutes minimum, and until effluent is clean and contains no visible particulate matter. Flushing pressure shall not exceed maximum operating pressure of the component. Flushing water supply shall have sufficient capacity to produce a flow velocity of 4 to 6 ft/s in largest pipe size, with pipe full.

Each piece of equipment shall be completely drained of all liquid prior to shipment. VENDOR shall be responsible for all damage which occurs as a result of improper drainage.

All actuators and extension spindles are to be removed from valve prior to shipment and boxed separately.

Instruments and valves located on jumpers shall also be disassembled for shipping. The valve body, internals, cover and cover bolting, assembly are to be shipped completely constructed and assembled. The actuators are to be shipped boxed separately but in the same consignment as the valve assemblies. Packaging shall prevent excessive transportation loads from damaging the packaged equipment.

Pump Assembly shall be shipped as a complete assembly and shipped separately.

Filter cartridges shall be shipped as a integral part of the CFF module.

Contact With Different Metals - Any item containing or comprised of austenitic stainless steel or nickel based alloys shall be stored, handled, and constructed in a manner that prevents direct contact with materials such as carbon steel, lead, zinc, copper, mercury, halogenated material, low melting elements, and any chloride containing material.

5.3 Packing

Exterior package type shall provide the level of protection required based on the storage and environmental limits. Containers, crates and skids shall be used as the methodology for packaging.

A. All flanged openings, which are not provided with a permanent flange cover, shall be protected by a polyethylene blind flange and a full faced rubber gasket with a minimum thickness of 1/8 inch.
B. The pump shall be covered in a heat shrink style wrap and braced for vibration. Heads shall be packaged similarly.
C. All pipe stubs shall be covered with a yellow chloride free plastic pipe cap.
D. For internal parts, permanent supports are preferred to avoid damage during shipment. If temporary internal bracing is required it shall be painted red and a temporary label, located near the nameplate, shall state that the skid contains temporary bracing that must be removed.
E. Where temporary bracing is welded in place, remove by grinding and perform NDE in accordance with fabrication NDE requirements.
F. Small parts that are to be shipped loose shall be bagged or boxed and marked with the purchase order number of the equipment.
G. For stainless fabrication items used for sealing, packaging, and tagging shall meet the chloride content limitations as defined by BUYER.
H. Prior to packaging, items must be cleaned per cleaning procedures outlined in the PSSH.
I. The transfer pump assembly including but not limited to the pump, pump column, motor, and mounting assembly shall be packaged and shipped completely assembled
J. Pump Transport Container
   1. A single re-useable pump transport container shall be provided by the VENDOR for each pump assembly.
   2. The pump transport container shall enable the pump, with containment bag in place, to be remotely placed in the pump transport container using only one crane.
   3. If necessary, any part of the pump transport container may be bolted to concrete when used during laydown at the VENDOR's discretion (this option will be available at the LAWPS site in the designated staging area). However, if this option is needed, the VENDOR shall clearly identify this need on VENDOR supplied drawings as an equipment interface point with the BUYER's facility.
   4. The pump transport container shall be free of sharp edges or corners that are capable of cutting the pump containment bag.
   5. The pump transport container shall enable the pump to be placed in the container without the need to raise the pump more than 2 feet above the ground (e.g. this could be accomplished if the end of the container is removable).
   6. The pump transport container shall include a pump laydown device or feature (that is either separate or integrated with the container) to enable the pump to be safely rotated from vertical to horizontal, using only one crane by remote control, without damage to the pump during demonstration. For example, the pump transport container could have a pivoting device (or a feature to pivot the pump upon) that is integrated with the pump transport container.

7. The pump transport container shall meet all the requirements of packaging, storage, shipping, and handling specifications.

5.4 Marking

A. Package marking shall follow the requirements of NQA-1-2008/2009A Part II subpart 2.2 and at a minimum shall appear on two sides of a container, preferably on one side and one end. Package markings shall be applied with waterproof ink or paint in characters that are legible.
B. When information relative to handling and special instructions is required, such information shall be preceded by the word CAUTION in letters that are at least 1/2 in. (12.7 mm), as permitted by package size. Alternatively if tags or labels are used, they shall be affixed to the container using a waterproof adhesive, tacks where practical, or a corrosion-resistant wire.
C. Clearly mark partial deliveries of component parts of equipment to identify equipment and contents to permit easy accumulation of parts and to facilitate assembly.
D. Prior to shipment, all packages shall be clearly and suitably tagged to identify, at a minimum:

1. BUYER's name with destination address
2. VENDOR's name with return address
3. Package numbers showing the Purchase Order (PO) Number followed by the package number and the total number of packages
4. Package contents description
5. Weight of package
6. Center of gravity
7. Parts list (for each package)
8. Handling instructions (e.g., Fragile, Center of Gravity, Keep Dry, This Side Up, Sling Here, Do Not Freeze) and stacking limitations, as appropriate
9. Special instructions (Desiccant Inside, Special Inspection, Storage, Unpacking Restrictions, etc.) as appropriate
10. Marking of items not within a container, such as pipe, tanks, and heat exchangers, shall exhibit the above specified information in a location that is in plain unobstructed view. Marking may be applied directly to bare metal surfaces, provided it has been established that the marking material is not deleterious to the item.
11. If any hazardous chemicals are included with shipments, the transport vehicle shall display the relevant Department of Transportation labels/placards.

5.5 Handling

5.5.1 Lift and Rigging Plan

VENDOR shall provide a Lift and Rigging Plan to cover the lifting and handling instructions for each lifted item (entire package as well as individual items that are uncrated). The plan shall describe the lift points, special lifting devices and/or hardware needs, and lift

diagrams. Lift diagrams shall be dimensioned drawings for each equipment/assembly indicating all dimensions and tools necessary for support, lift and shipment of the lifted item. Tolerances for such dimensions shall be noted, either on the specific dimension or in general notes. Dimensions locating centers of gravity shall be generated by VENDOR calculation and shall be noted on the drawing, and the calculations shall be submitted with the drawings demonstrating that the requirements of this section have been satisfied. These drawings shall be provided with the PSSH plan described in Section 5.1.

5.5.2 Lifting Attachments and Equipment Design

The lifting attachment(s) on the equipment (lifting eyes, lugs, ears, etc.) and the lifted item shall be designed in accordance with the following procedure except ASME BTH-1 should be used to verify lifting lugs hole diameter compared to the shackle pin diameter (the D to d ratio). The design shall consider equipment orientation, i.e., horizontal to vertical.

A. Estimated Weight of item: Determine the dead weight of each item by calculation, or from indicated weight from a calibrated load measuring device reading (if available). For reference, describe how the weight information was obtained.

B. Weight Contingency Factor: Increase the estimated weight by a reasonable contingency factor to account for the uncertainty of differences between actual field conditions and the reference drawings. The recommended increases are: a) 15% or more as necessary, for vessels, pumps, and other items with voids that may contain liquid, b) 5% for items that are solid or for which void fill is already accounted for in the estimated weight.

C. Dynamic Lifting Force: Increase the resultant weight from Step 2 by 25% to account for dynamic loads from crane operations.

D. Design Weight: The weight to be used in the structural analysis is the weight from Step 2 (including contingency factor) multiplied by the 1.25 factor from Step 3. In most cases, the design weight is the estimated weight times (1.05) times (1.25).

E. Material Properties: Use appropriate technical references, and provide reference to sources in calculations.

F. Evaluation of Stresses: Use the appropriate requirements to calculate stresses using the Design Weight. Current editions of Codes or other referenced documents should be used for the evaluation. Computer software may be used (provide as a minimum the program name, version/revision; include printout of input/output data; provide output traceability to the computer program and the input). The calculations should include the following items as a minimum:

1. Use Design Weight from Step D above.
2. Deleted
3. Use 45 degree minimum sling angle from horizontal for items with more than one pick point. An angle greater may be specified in the design and shown on the drawings to reduce the lateral load component. List the minimum sling length required to maintain the specified sling angle.
4. For multiple pick points: use 2 lift points if there are 2 total, use 3 lift points if there are 3 total, and use 3 lift points if there are 4 total to determine the force per pick point. Divide the Design Weight (from Step D above) by the number of pick points, at 45° or the specified angle, allowed for analysis. Note: This is applicable only if the weight is evenly distributed throughout the multiple pick points.

Determine adequacy of lifting points (vertical, horizontal and resultant loads, as appropriate).

5. Determine adequacy of welds.

G. Design Ratio: Determine the design ratios for the resultant stresses in each component. The design ratio is the allowable stress per AISC 360 divided by the calculated stress (Step F).

H. When a minimum design ratio is less than 1, either a more detailed analysis is required; the lifting point must be modified, repaired, or replaced; or the method of lifting changed. The revised detailed analysis or the analysis for the new lifting point (replacement or repaired) shall be included in the package.

I. Maximum Allowable Rated Capacity: Determine the Maximum Allowable Rated Capacity by multiplying the Design Weight (Step D) by the minimum design ratio obtained in Step F.

J. Recommended Not-To-Exceed Lifting Pull: Provide a Recommended Not-To-Exceed Lifting Pull (for each lifting point and for the entire item). This is a safety limit, and is not based on the capacity of either the item or the lifting points. The Recommended Not-To-Exceed Lifting Pull is normally 1.25 times the Estimated Weight (Step A).

Notes:

1. The Recommended Not-To-Exceed Lifting Pull may be as high as, but should never exceed the Maximum Allowable Rated Capacity as determined and by Step I.
2. The Recommended Not-To-Exceed Lifting Pull may be as low as the resulted weight from Step B.
3. The Recommended Not-To-Exceed Lifting Pull is primarily for items that may be stuck in place and therefore is not required for installing new items or for items that are not expected to be stuck.

5.5.3 Lift Point Marking

Lift points for packages and individual components shall be clearly identified.

5.5.4 Critical Welds

A. All critical welds shall be identified in the VENDOR's design media.

B. For the purpose of this requirement, critical welds are defined as those welds whose failure could result in loss of load or loss of load control.

C. All critical welds on lifting devices shall be full-penetration welds, if possible.

D. Critical welds shall be verified by Non-Destructive Examination.

5.5.5 Special Lifting Devices

Any special handling devices needed for assembly or installation shall be identified and supplied with the equipment. VENDOR provided structural and mechanical lifting devices shall meet the requirements of DOE/RL-92-36. All lifting devices shall be rated for outdoor service as defined in Section 3.5.8 Environment.

5.5.6 Below-the-Hook Device Markings

BTH lifting devices shall be provided with markings in accordance with ASME B30.20 and tags in accordance with DOE-RL-92-36. In addition to the requirements of ASME B30.20 and DOE-RL-92-36, the marking shall include Hanford drawing number (if applicable), special lifting instructions, and clearly indicate lifting attachments. The marking shall be in the form of a name tag, name plate, or other permanent marker.

5.6 Shipping

All equipment shall be shipped in accordance with the applicable DOT standards and Section 3.5.9 and in an orientation ready for lifting. Additional handling of the equipment to orientate it for lifting is not acceptable.

5.6.1 Transport and Tie-Down Instructions

VENDOR shall provide instructions and diagrams for securing all shipping packages. Transportation tie-down points shall be identified on the equipment. Lift points shall not be used for tie-downs. Calculations will be required for the design of all transport tie-down attachment points.

5.6.2 Unpacking and Assembly Drawing

VENDOR shall provide a dimensioned drawing that includes receiving instructions, unpacking instructions, and on-site assembly instructions and directions for removal of temporary supports and clamping devices (if equipment is shipped in a disassembled state). These drawings shall be provided with the PSSH plan described in Section 5.1.

5.6.3 Offloading

Offloading at BUYER designated delivery site will be performed by the BUYER or a BUYER-designated representative.

6 NOTES

APPENDIX A – PIPING PRE-PRESSURE TEST CHECKLIST

INSPECTION DATE _____

INSPECTED BY _____

PLANT _____ VENDOR _____

SYSTEM/LINE NO. _____ DWG REF. _____

		BUYER				VENDOR		
		(Initials)		Date		(Initials)		Date
1.	All material/equipment (valve numbers, nipple schedules, flange ratings, etc.) complies with specifications and Piping and Instrumentation Diagrams							
2.	All threaded connections, flange bolting, gaskets, and socket welds correctly installed							
3.	All PWHT completed and acceptable							
4.	All NDE (hardness, MT, PT, RT, UT) acceptable							
5.	Instrumentation protected/secure							
6.	Rotating equipment internals protected/secure							
7.	Expansion joints, relief valves, orifice plates, meters, control valves, filter elements, internal refractories, and other special items protected/ secured							
8.	Vents installed at system high points.							
9.	Gages calibrated and installed.							
10.	Status of check valve internals has been tagged							
11.	Blinds correctly installed.							
12.	Temporary plugs and caps have been replaced							
13.	Low point drains are installed as needed.							
14.	All welded attachments have been installed and accepted							
15.	Instrument status in compliance with Appendix B							

REMARKS

_____

_____

_____

APPENDIX B – STATUS OF INSTRUMENTS DURING PRESSURE TEST

	Block & Vent	Remove	Blind Off	Include in Test	Refer to Notes
Analyzers		X			
Control Valves				X	
Flame Arrestors		X			2
Flow Indicating Switches-Bellows Types		X			
Flow Instruments-D/P Cell & Bellows Type	X				
Flow Instruments-Rotameters		X			2
Flow Meters-Positive Displacement Type			X		2
Flow Meters-Turbine Type		X			2
Flow Switches-Vane Type		X			
Gage Glasses	X				
Level Instruments-Displacer Type		X			
Level Instrument-D/P Cell & Bellows Type	X				
Level Switches-Float Type		X			
Orifice Plates		X			4
Pressure Gages	X				
Pressure Instruments-All Types	X				
Pressure Regulators		X			
Pressure Switches	X				
PSV's		X			2
PSV's-3/4" and 1" Screwed		X			2
Rupture Discs		X			
Steam Traps		X			2
Thermowells				X	

NOTES:

1. All instruments shall be protected from damage due to freezing. In preparation for cold weather and during cold weather all instruments must be drained and process lead lines blown out with air or nitrogen.
2. Fabricate and install temporary spool if necessary for test.
3. Caution - do not overpressure instrument. Check with Instrument Engineer for maximum test pressure allowed by manufacturer.
4. Install after pressure testing and line flushing.

APPENDIX C – PIPING PRESSURE TEST CHECKLIST

INSPECTION DATE _____

INSPECTED BY _____

PLANT _____ VENDOR _____

SYSTEM/LINE NO. _____ DWG REF. _____

TEST MEDIUM (INCLUDING PPM CHLORIDE) _____

TEST PRESSURE, PSIG. TEST TEMP, °F _____

TEST GAGE_____ TEST GAGE PRESSURE, PSIG_____

CALIBRATION DUE DATE _____ AMB TEMP / TIME OF DAY / TEST DURATION _____

		BUYER		VENDOR	
		(Initials)	Date	(Initials)	Date
1.	Pressure Test Complete and acceptable				
2.	Test boundary sketch with ID of any joints not tested attached.				
3.	If partial tests were made, define:				
	a. _____				
	b. _____				
	c. _____				
	d. _____				
4.	System ready for post-test check.				
	a. Test blinds removed.				
	b. Final line flush complete.				
	c. Vents properly plugged.				
	d. Drains properly valved and plugged.				
	e. Instruments properly installed.				
	f. Expansion joints, relief valves, control valves, in-line meters, filter elements orifice plates, in-line strainers, and other special items properly installed.				
	g. Rotating equipment properly in-line.				
	h. Temporary supports removed.				

REMARKS

_____

_____

SPECIFICATION

15-2-003

ION EXCHANGE COLUMN SPECIFICATION

AECOM ATKINS AREVA

LOW ACTIVITY WASTE PRETREATMENT SYSTEM

Project No. 31269 (T5L01)

Document No. 15-2-003

Safety Related ☒ Non-Safety Related ☐

ION EXCHANGE COLUMN SPECIFICATION

Prepared for
Washington River Protection Solutions, LLC

Revision: 1 Status: Final

LARRY E. ULBRICHT
STATE OF WASHINGTON
27921
REGISTERED
PROFESSIONAL ENGINEER

5/16/17

FOR PERMITTING
LEU 5/16/17

REVISION PAGE

Project Name:	LAWPS		Discipline: Mechanical
Client:	Washington River Protection Solutions		Project Number: 31269 (T5L01)
			Latest Revision: 1

Revision Signatures

Kevin Minton Digitally signed by Kevin Minton Date: 2017.05.15 14:26:00 -07'00'		David Skeath Date: 2017.05.15 14:28:03 -07'00'	
Prepared by Larry Ulbricht Digitally signed by Larry Ulbricht Date: 2017.05.16 09:36:34 -07'00'	Date	Approved by (SDE/Lead) Paul Bell Digitally signed by Paul Bell Date: 2017.05.16 15:12:31 -06'00'	Date
Checked by SiYuan Lin 2017-05-15 18:40:36	Date	Approved by (QA) For DP Michael Schultze Digitally signed by Michael Schultze Date: 2017.05.16 17:30:08 -06'00'	Date
Verified by (if required)	Date	Approved by (PEM)	Date

Status	Rev. No.	Date	Prepared By	Pages	Description of Changes
Final	0	9/16/16	K. Minton	59	Approved for Bid
Final	1	5/16/17	K. Minton	62	Approved for Award

Safety Related Yes ☒ No ☐	Quality Level Full QA ☒ Enhanced QA ☐ Commercial QA ☐

Table of Contents

1.0 SCOPE 1
2.0 APPLICABLE DOCUMENTS 1
2.1 Government Documents 1
2.2 Non-Government Documents 2
2.3 Other Documents 4
3.0 REQUIREMENTS 4
3.1 Item Definition 5
3.1.1 Item Diagram 6
3.1.2 Interface Definition 7
3.2 Feed Stream Characteristics 8
3.2.1 Functional Characteristics 8
3.2.2 Safety Related Critical Characteristics and Performance Criteria 12
3.2.3 Physical Characteristics 12
3.2.4 Environment 12
3.3 Design and Construction 13
3.3.1 Industry and Government Standards 13
3.3.2 Radiation 13
3.3.3 Protective Coatings 13
3.3.4 Replaceability 13
3.3.5 Identification and Marking 13
3.3.6 Nameplate 13
3.3.7 Human Factors Engineering 14
3.3.8 Qualification 14
3.3.9 Document Submittals 14
3.3.10 Personnel and Training 18
3.3.11 Parts/Materials/Processes 18
3.3.12 ASME Process Vessels Fabrication 20
3.3.13 Structural Support Steel 35
3.3.14 I&C Requirements for Packaged Units 36
3.3.15 Electrical Requirements for Packaged Mechanical Equipment 36
3.3.16 Safety Natural Phenomena Hazard Performance Requirements 36
4.0 QUALITY ASSURANCE REQUIREMENTS 41
4.1 General 41
4.2 QA Submittals 43
4.3 Specific Quality Assurance Requirements 44
4.4 Acceptance Criteria 48
4.5 Inspections and Tests 49
5.0 PREPARATION FOR DELIVERY 50
5.1 General 50
5.2 Preservation and Packaging 50
5.3 Packing 51
5.4 Marking 51
5.5 Handling 52
5.5.1 Lift and Rigging Plan 52
5.5.2 Lifting Attachments and Equipment Design 52
5.5.3 Lift Point Marking 53
5.5.4 Critical Welds 53

5.5.5 Special Lifting Devices 53
5.5.6 Below-the-Hook Device Markings 53
5.6 Transportation and Storage 53
5.7 Shipping 54
5.7.1 Transport and Tie-Down Instructions 54
5.7.2 Unpacking and Assembly Drawing 54
5.7.3 Offloading 54
6.0 NOTES 54

List of Tables

Table 3-1 Physical Properties of Unfiltered Process Fluid 9
Table 3-2 Radionuclide Concentration Limits for Treated LAW to WTP Vitrification 10
Table 3-3. Pre-Ion Exchange Design Source Term (Liquid Phase). 10
Table 3-4: Summary of Average Chemical components in Waste Feed for LAWPS Before Filtration 11
Table 3-5 Fabrication Traveler Hold Points 31
Table 3-6. LAWPS SDC-3 Ground Response Spectra (5% Damped) 39
Table 4-1 Procurement Quality Clauses 43

List of Figures

Figure 3-1. IX Column. (Refer to DPDs for details.) 6
Figure 3-2 Acceptable Nozzle Connections 22
Figure 3-3 Unacceptable Nozzle Connections 22
Figure 3-4 Integral Nozzle Reinforcement Methods (For FQA & EQA Fabrication) 24

LIST OF TERMS

Abbreviations and Acronyms

AISC	American Institute of Steel Construction
APP	Approval Required, prior to work
ASCE	American Society of Civil Engineers
ASME	American Society of Mechanical Engineers
ASNT	American Society for Nondestructive Testing
ASTM	American Society for Testing and Materials
AWS	American Welding Society
BNL	Brookhaven National Laboratory
BPVC	Boiler and Pressure Vessel Code
BTH	Below the Hook
CMTR	Certified Materials Test Report
C of C	Certificate of Conformance
CGI	Commercial Grade Item
CQA	Commercial Quality Assurance
DCN	Design Change Notice
DOE	Department of Energy
DOT	Department of Transportation
DPD	Design Proposal Drawing
EQA	Enhanced Quality Assurance
ECN	Engineering Change Notice
ESL	Evaluated Suppliers List
FAT	Fabrication Acceptance Testing
FCAW	Flux Cored Arc Welding
FQA	Full Quality Assurance
GMAW	Gas Metal Arc Welding
GTAW	Gas Tungsten Arc Welding
HVAC	Heating, Ventilation, and Air Conditioning
IEEE	Institute of Electrical and Electronics Engineers
INF/REC	Approval Not Required, for information/record only
ISRS	In-Structure Response Spectra
IX	Ion Exchange

IXC	Ion Exchange Column
LAWPS	Low Activity Waste Pretreatment System
M&TE	Measuring and Test Equipment
MAWP	Maximum Allowable Working Pressure
MDMT	Minimum Design Metal Temperature
MDS	Mechanical Datasheet
MSR	Master Submittal Register
NBIC	National Board Inspection Code
NCR	Nonconformance Report
NDE	Nondestructive Examination
NPH	Natural Phenomena Hazard
NPS	Nominal Pipe Size
PFI	Pipe Fabrication Institute
PO	Purchase Order
PPM	Parts per Million
PQR	Procedure Qualification Record
PSSH	Packaging, Shipping and Handling Plan
PWHT	Post Weld Heat Treatment
QA	Quality Assurance
QAP	Quality Assurance Program
RFI	Request For Information
RRS	Required Response Spectrum
SAW	Submerged Arc Welding
SCI	Suspect/Counterfeit Items
SDC	Seismic Design Category
SMAW	Shielded Metal Arc Welding
SOW	Statement of Work
sRF	Spherical Resorcinal Formaldehyde
SRSS	Square Root Sum of Squares
SSC	Systems Structures & Components
TOC	Tank Operations Contractor
TRS	Test Response Spectrum
TRU	Transuranic

WAC	Washington Administrative Code
WPS	Welding Procedure Specification
WPQ	Welder Performance Qualification
WRC	Welding Research Council
WTP	Waste Treatment and Immobilization Plant

Units

U.S. customary units

Definitions

BUYER – The company for whom the VENDOR is performing work or services.

COMMERCIAL QUALITY ASSURANCE (CQA) - Level of controls for those items, services, or processes where, based on an evaluation of risk or nuclear safety, no additional quality controls beyond the providers published or stated attributes of the item, service, or process is required.

DESIGN CHANGE – Within the context of this specification, a DESIGN CHANGE is technically equivalent to a SUBSTITUTION (see SUBSTITUTION). However, the term DESIGN CHANGE may be used to refer to more significant changes to the design compared to a simple substitution.

DEVIATION – any departure from the requirements contained in the purchase order and specification which VENDOR proposes to incorporate if approved by BUYER.

ENHANCED QUALITY ASSURANCE (EQA) - Level of controls for those items, services, or processes where, based on an evaluation of risk or nuclear safety, additional controls beyond the provider's published or stated attributes of the item, service, or process are needed to verify critical attributes.

FULL QUALITY ASSURANCE (FQA) - Level of controls applied for items services, or processes that are commensurate with the controls invoked under ASME NQA-1 or other appropriate national consensus standard.

HANDLING - The movement or transportation of items following receipt from offsite/ project locations. This includes movement within storage areas and movement/transportation from receipt or storage areas to field locations. Handling requirements include the need for special handling tools and equipment, restrictions on material composition of surfaces in contact with the item, protection against damage or deterioration, which could occur during movement and placement, protection against physical damage due to excessive shock or vibration, and protection against entry of dirt, water, or other contaminants.

HOLD POINT – A mandatory inspection activity beyond which work shall not proceed until (1) the inspection is performed by an independent inspector and/or BUYER and acceptance is authenticated, or (2) a written release is authorized by the organization who established the hold point.

MORE CONSERVATIVE – "More conservative" shall be interpreted as "more protective of the health, safety and well-being of Site workers and facilities, the public, and environment, as applicable."

NONCONFORMANCE – a deficiency in characteristic, documentation or procedure that renders the quality of an item or activity unacceptable or indeterminate.

PROCUREMENT QUALITY CLAUSES (QA Clauses) – Procurement quality clauses are used for the acquisition of items and services. The clauses establish contractual obligations for quality program systems, identification, traceability, document submittals, testing, reporting, qualification, special process controls, inspections, etc.

PRODUCT DATA – Printed information including, but not limited to, catalog cuts, color charts, illustrations, diagrams, templates, performance curves, brochures, and other forms of Product literature.

QUALITY ASSURANCE RECORDS – Quality assurance plans, procedures, and records, including completed documents that furnish evidence of the quality of an item or activities affecting quality.

RATED LOAD – The maximum load that can be lifted by the device.

SHALL / MUST – Denotes project requirements, compliance is required

SHIPPING – The movement of items from an off-site/project location (VENDOR, warehouse, etc.) to an on-site/project location, or movement from an onsite/ project location to an off-site/project location. Shipping requirements include packaging and securing of items to protect against damage or deterioration which could occur during movement and transportation, protection against physical damage due to excessive shock or vibration, protection against entry of dirt, water, or other contaminants, and protection against other environmental conditions such as temperature or humidity.

SHOULD – Denotes recommendation or expectation, compliance is expected.

SPECIFICATION – Refers to any design, fabrication or supply specification.

STORAGE – Holding of items in areas that address: the probable maximum period to be held, the inherent physical limitations of the item itself, and required protection from potential hazards such as fire, corrosion, chemical attack and environmental conditions. Storage also includes the requirements for maintaining the integrity and operability of items through routine maintenance, cleaning, or other means of preservation.

SUBSTITUTION – Any change or deviation from issued approved drawings, designs, methods, or contract terms and conditions. Changes in products, materials, equipment, methods of construction, and test criteria required by the Contract Documents proposed by the VENDOR after award of the Contract are considered to be requests for substitution.

VENDOR – The Company responsible for the supply of equipment or services.

WITNESS POINT – An inspection activity beyond which work shall not proceed until an inspector and/or BUYER is notified and (1) the inspection is performed and released, or (2) the inspection is deferred and can be completed at a later time, or (3) a written waiver is issued by the organization who established the witness point.

1.0 SCOPE

This specification provides the requirements for the supply of two Ion Exchange Columns (IXCs) for the Low Activity Waste Pretreatment System (LAWPS) project. The scope of supply includes the design, fabrication, examination, testing, packaging, lifting, and shipping, for the IXCs as identified in this document and associated related sections, associated datasheets and drawings.

IXCs consist of ion exchange columns filled with resin to selectively remove cesium from the feed stream. The columns will be mounted on a special mounting plate to allow remote replacement of the column from the supporting steelwork. The BUYER will provide special PUREX connectors for remote pipe connections to allow for remote removal of the column and maintenance activities in the connecting pipework.

The scope of the services identified in this specification encompasses Safety Significant items within the column. Full quality assurance applies, as identified in the procurement documents accompanying this specification.

The BUYER shall be advised immediately in writing of any conflicts as soon as they are identified. No substitutes or deviations to this specification will be allowed without written approval from BUYER.

2.0 APPLICABLE DOCUMENTS

Work shall be performed in accordance with the referenced codes, standards, and documents for this specification.

The following codes and standards, of the exact issue shown, form part of the BUYER basis of design to the extent specified in the applicable sections of this document. In the event of a conflict between documents referenced herein and the requirements of this specification, the requirements of this specification shall take precedence only when this specification's requirements are more stringent or conservative. If a code or standard not listed below is to be applied to the scope (see Section 1.0), apply the latest code or standard as of April 16, 2015.

Use of materials certified to earlier American Society for Testing Materials (ASTM) revisions than the latest revision are acceptable, provided the materials have the same chemical and mechanical properties as the latest revision of the Standard. VENDOR shall provide documentation for substitutions to the BUYER for evaluation.

2.1 Government Documents

DOE/RL-92-36, Release 80 (2016)	Hanford Site Hoisting and Rigging Manual
WAC 173-303-810	General Permit Conditions
WAC 173-303-640	Tank Systems

2.2 Non-Government Documents

AISC 360, 2010	Specification for Structural Steel Buildings
AISC N690-12, 2012	Specification for Safety-Related Steel Structures for Nuclear Facilities
ASCE 4-98, 2000	Seismic Analysis of Safety-Related Nuclear Structures and Commentary
ASCE 7-10, 2010	Minimum Design Loads for Buildings and Other Structures
ASCE 43-05, 2005	Seismic Design Criteria for Structures, Systems, and Components in Nuclear Facilities
ASME B30.20, 2013	Below-the-Hook Lifting Devices
ASME B31.3, 2012	Process Piping
ASME Boiler and Pressure Vessel Code (BPVC), Section II, 2013 Edition	Materials, Parts A through D
ASME Boiler and Pressure Vessel Code (BPVC), Section V 2013 Edition	Nondestructive Examination
ASME Boiler and Pressure Vessel Code (BPVC), Section VIII, 2013 Edition	Rules for Construction of Pressure Vessels Division 1
ASME Boiler and Pressure Vessel Code (BPVC), Section VIII, 2013 Edition	Rules for Construction of Pressure Vessels Division 2, Alternate Rules
ASME Boiler and Pressure Vessel Code (BPVC), Section IX, 2013 Edition	Welding and Brazing Qualifications
ASME BTH-1, 2014	Design of Below-the-Hook Lifting Devices
ASME NQA-1, 2008 and 2009A	Quality Assurance Program Requirements for Nuclear Facility Applications
ASME QME-1, 2012	Qualification of Active Mechanical Equipment Used in Nuclear Facilities
ASNT SNT-TC-1A, 2011	Recommended Practice for Personnel Qualification and Certification in Nondestructive Testing
ASTM A193/A193M, 2014	Standard Specification for Alloy-Steel and Stainless Steel Bolting Materials for High Temperature or High Pressure Service and Other Special Purpose Applications
ASTM A194/A194M, 2014	Standard Specification for Carbon and Alloy Steel Nuts for Bolts for High Pressure or High Temperature Service, or Both

ASTM A240/A240M, 2015	Standard Specification Chromium and Chromium-Nickel Stainless Steel Plate, Sheet, and Strip for Pressure Vessels and for General Applications
ASTM A262, 2015	Standard Practices for Detecting Susceptibility to Intergranular Attack in Austenitic Stainless Steels
ASTM A276, 2015	Standard Specification for Stainless Steel Bars and Shapes
ASTM A312/A312M, 2015	Standard Specification for Seamless, Welded, and Heavily Cold Worked Austenitic Stainless Steel Pipes
ASTM A370, 2014	Standard Test Methods and Definitions for Mechanical Testing of Steel Products
ASTM A480, 2014	Standard Specification for General Requirements for Flat-Rolled Stainless and Heat- Resisting Steel Plate, Sheet, and Strip
ASTM F436, 2011	Standard Specification for Hardened Steel Washers
AWS A4.2, 2006	Standard Procedures for Calibrating Magnetic Instruments to Measure the Delta Ferrite Content of Austenitic and Duplex Ferritic-Austenitic Stainless Steel Weld Metal
AWS D1.6/D1.6M, 2007	Structural Welding Code – Stainless Steel
BNL-52361, 1993	Seismic Design and Evaluation Guidelines for the Department of Energy High-Level Waste Storage Tanks and Appurtenances
IBC, 2012	International Building Code
ICC-ES AC 156, 2010	Acceptance Criteria for Seismic Certification by Shake Table Testing of Nonstructural Components
NBBI NB 23 (NBIC), 2015	National Board Inspection Code
PFI Standard ES-24, 2013	Pipe Bending Methods, Tolerances, Process and Material Requirements
WRC-297, 1984	Local Stresses In Cylindrical Shells Due To External Loadings On Nozzles-Supplement to WRC Bulletin No. 107
WRC 537, 2010	Precision Equations and Enhanced Diagrams for local Stresses in Spherical & Cylindrical Shells due to External Loadings for Implementation of WRC Bulletin 107

2.3 Other Documents

A. TFC-BSM-IRM_DC-C-07, Rev A-5, Vendor Processes

B. TFC-ENG-STD-22, Rev F Piping, Jumpers, and Valves

C. TFC-ESHQ-Q_C-C-03, REV C-13, Control of Suspect/Counterfeit Items

D. TOC Incoming Letter of Transmittal, A-6005-315

E. Request for Information/Request for Clarification of Information (RFI), A-6003-417

F. A-6002-544, Commercial Grade Dedication Form

G. ORNL/TM-2015/47, Confined Swelling Pressure Tests for Spherical Resorcinol Formaldehyde Resin

H. RPP-14541, Rev 7, Jumper Fabrication and Testing Specification for Tank Farms

3.0 REQUIREMENTS

The technical requirements of the scope of work are covered by this specification datasheet and associated drawings:

- 202LP-IXA-IX-IXC-200, Ion Exchange Lead Column
- 202LP-IXA-IX-IXC-201, Ion Exchange Lag Column
- 202LP-IXA-IX-TE-275, IX Lead Column Temperature
- 202LP-IXA-IX-TE-219, IX Lag Column Temperature
- H-16-000025, P&ID IX Pit
- H-16-001311 Sheet 1, LAWPS IX-P-02 IX PIT Lead & Lag Column DPD
- H-16-001311 Sheet 2, LAWPS IX-P-02 IX PIT Lead & Lag Column Assembly DPD
- H-16-001312, LAWPS IX-P-02 IX PIT Lead and Lag Column DPD
- H-16-001920, LAWPS Tank Thermowell Typical Detail
- H-16-001924 Sheet 1, LAWPS Remote Nut Sleeve Assembly
- H-16-001924 Sheet 2, LAWPS Remote Nut Sleeve Assembly
- H-16-001925, LAWPS Jumper Nozzle Connection 2" PUREX Kickoff Assembly
- H-16-001926, LAWPS Jumper Nozzle Connection 1" PUREX Kickoff Assembly
- H-16-001927, LAWPS Jumper Nozzle Connection 3" PUREX Kickoff Assembly
- 15-2-003-MSR Master Submittal Register (MSR) LAWPS Ion Exchange Columns (Form A6005-317)

The equipment shall also meet the following requirements:

A. The columns shall have a minimum design pressure of 350 psig.
B. The column bed diameter shall be 42 inches.
C. The column bed height will be as necessary for 308 gallons of fresh resin in sodium form and sufficient head room for resin bed expansion during up-flow regeneration.
D. The columns shall be designed to retain a resin bead size of 335-460 micron using resin screens; screens shall be used for both upflow and downflow directions.
E. Dedicated lifting points shall be provided for the columns for remote installation. Lifting points shall allow for vertical handling operation and be designed to permit lifting the columns without distortion, damage, or misalignment to the module components or associated support system.

F. The columns shall be designed for fully remote removal and replacement from the process area. VENDOR shall provide a dedicated lifting beam for use with the IX columns. Lifting beam shall be designed to be used with a 30-ton crane hook.
G. The columns shall have a 40 year design life.
H. VENDOR shall allow corrosion and erosion allowances for the 40 year design life.
I. Refer to the DPDs and datasheets for the IX columns for additional design, safety, and performance data.
J. IX columns shall be designed, fabricated and tested in accordance with ASME Process Vessel Fabrication requirements defined in Section 3.3.12
K. Anchoring shall be designed to meet the seismic qualifications as required by the method(s) defined in Section 3.3.16 for "Safety Natural Phenomena Hazard Performance Requirements".
L. IX Columns shall be designed to limit all remote nozzle deflections with respect to the vessel to a maximum of .020 inches

3.1 Item Definition

The column includes the following features/components: (See Figure 3-1)

A. The internal design features of the columns are to be provided by the VENDOR in association with BUYER design support from full scale testing processes being undertaken by the BUYER. The final details and results of this testing will be provided during the design stage of this contract.
B. BUYER full scale testing will also confirm final column nozzle locations. These final nozzle locations are mandatory and not to be relocated without BUYER approval.
C. Ion exchange column with support plate. The support will be welded to the IX column and include lifting lugs, reinforced stiffeners and features designed to provide for remote lifting and handling.
D. Design shall include internal features to remotely fill and replace the resin within the column.
E. Special remote jumper nozzle connectors (provided by BUYER) are to be welded to the IX column nozzles by VENDOR, as defined on the DPD's to accommodate remote handling needs during maintenance and operation.
F. Remote features are defined on the drawings and include remote jumper nozzle connectors, remote lifting bails, remote bolting and positioning using location pins.

3.1.1 Item Diagram

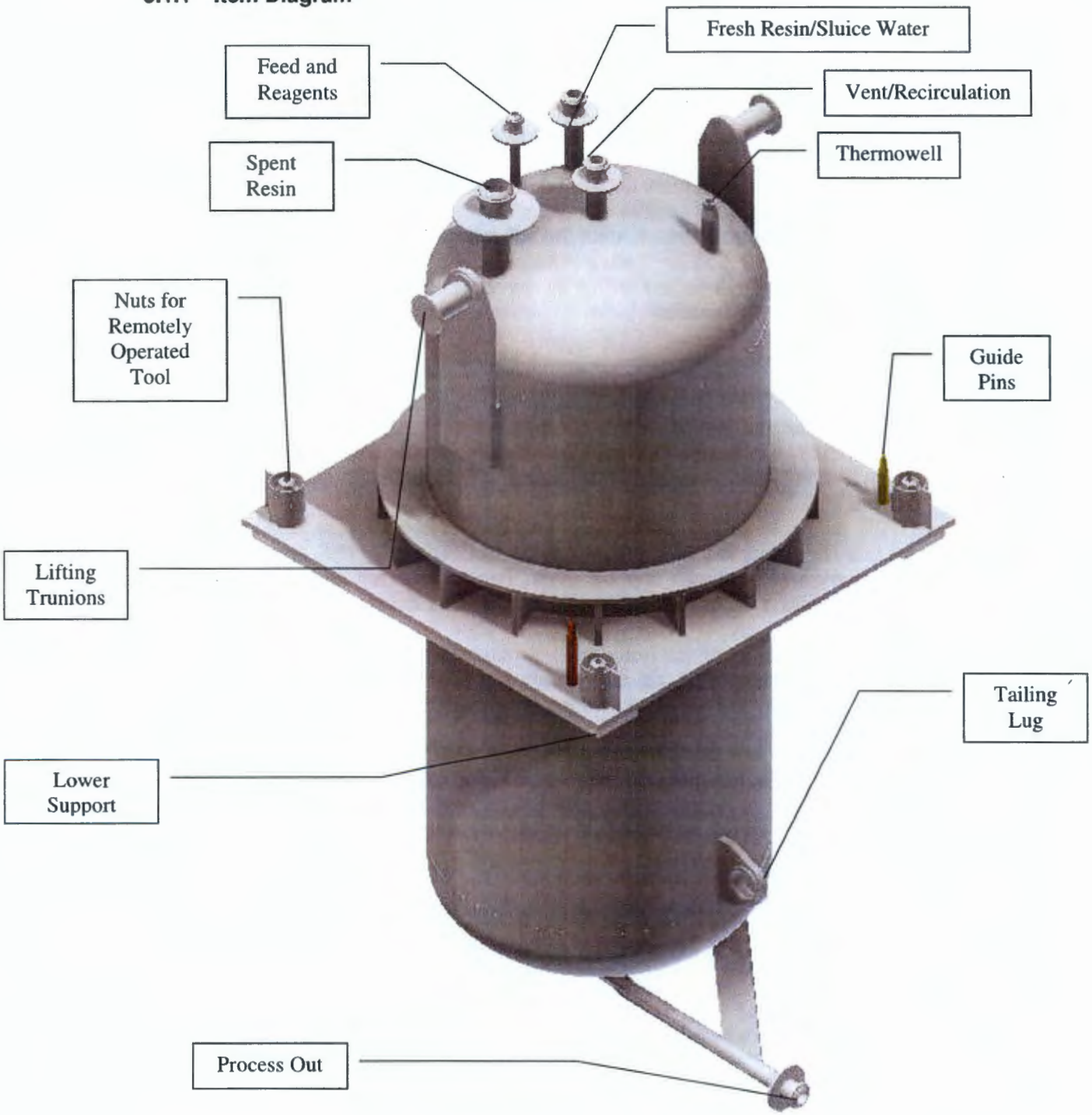

Figure 3-1. IX Column. (Refer to DPDs for details.)

3.1.2 Interface Definition

P&ID H-16-000025 identifies interfaces within the facility. Facility utility/service supplies are as follows:

Note: Temperature of water and chemicals will be the same as the feed (see Table 3-1).

- Service Water, as needed
- Chemical/Reagents, 0.1M NaOH 15.4 gpm, 0.45M HNO_3 7.2 gpm, 1M NaOH, 29.5 gpm, 90 psig
- Spheromers®[1] RF380 Resin, elutable spherical resorcinol formaldehyde (sRF) with a typical size range of 335-460 micron.

  The size and shape specification for the finished resin bead from the resin supplier is provided as follows:

  - • Mass average of particles in equivalent hydrogen-form dry diameter shall be within 10% of 380 micron.
  - • Mass percentage particles less that 330 micron in equivalent hydrogen-form dry diameter shall not exceed 2%.
  - • Mass percentage particles less than 225 micron in equivalent hydrogen-form dry diameter shall not exceed 0.5%.
  - • Mass percentage particles that are less than 60 micron in equivalent hydrogen-form dry diameter after vigorous mechanical mixing or agitation shall not exceed 0.02%.
  - • Mass percentage particles greater than 520 micron in equivalent hydrogen-form dry diameter shall not exceed 2%.
  - • Mass percentage particles greater than 600 micron in equivalent hydrogen-form dry diameter shall not exceed 0.5%.
  - • Mass percentage of non-spherical or broken RF particles (sphericity less than 0.8) greater than 330 micron in hydrogen-form (too large to pass through an equivalent screen) shall not exceed 6%.
- Filtered waste feed is provided at a flow rate of 5-14 gpm at 350 psig and has the properties defined in the following tables:
  - Table 3-1. Physical Properties of Unfiltered Process Fluid
  - Table 3-3. Pre-Ion Exchange Design Source Term (Liquid Phase)
  - Table 3-4: Summary of Average Chemical Components in Waste Feed for LAWPS. (These are the components of the pre-filtered waste stream.)
- Treated waste satisfying limits of Table 3-2 Radionuclide Concentration Limits for Treated LAW to WTP Vitrification. Table 3-2 is provided for information only.
- VENDOR shall design equipment to interface with BUYER's remote impact wrench.

[1] Spheromers® RF 380 is a registered trademark of Microbeads AS, Vestvollveien 30A, 2019 Skedsmokorset, Norway

3.2 Feed Stream Characteristics

3.2.1 Functional Characteristics

For process conditions refer to the Mechanical Systems Data Sheets. (The VENDOR shall provide those parameters on the data sheet that originate with the component design.)

Ion Exchange Columns shall consist of two independent IXCs that will operate in a lead/lag configuration. The IXCs shall be designed for use with the elutable spherical resorcinol formaldehyde (sRF) resin that will support remote operations including the sluicing of fresh resin into the columns and spent resin from the columns. The sRF resin will remove cesium137 from the solution processed by the IXC.

The IX process cycle consists of the following:

- Loading – Lead to Lag downflow, 5-14 GPM
- LAW displacement – Lead to Lag downflow at 16 GPM, using 0.1M NaOH
- Pre-elution rinse – Lead to Lag downflow at 16 GPM, using deionized water
- Elution – Lag to Lead downflow 8 GPM, using 0.45M HNO_3
- Post-elution rinse – Lag to Lead downflow at 8 GPM, deionized water
- Regeneration – Lag to Lead upflow at a velocity of 12.4 cm/min for the initial bed volume and 1.96 cm/min for the final bed volume, using 1M NaOH
- Treated Waste Backflow – Lag to Lead upflow at a velocity of 2.5 cm/min

The radial distribution of the waste shall provide for an even flow across the resin bed.

The resin bed volume will be 308 gallons in the sodium form and 240 gallons in the hydrogen form.

The VENDOR will provide the pressure drop across the column in upflow and downflow using 4 GPM to 30 GPM for downflow and 4 GPM to 30 GPM for upflow. The VENDOR will provide the minimum flow rate needed to assure even distribution.

Table 3-1 Physical Properties of Unfiltered Process Fluid

Parameter	Unit	Nominal Value	Range
Density	g/ml	1.28	1.0 – 1.35
Viscosity	Centipoise (cP)	6	1 – 15
Temperature	℃	25	20 - 45
Solids Concentration	wt%	0.8	0 – 3.3 [a]
Solids Particle Size	µm	7.5	0.01-210
Solid Particle Density	g/ml	-	≤5.68[b]
Surface Tension[g]	dynes/cm	80	70-100

a 10wt% maximum in abnormal conditions
b Upper boundary value corresponding to ZrO_2
c The surface tension values originate from PNL-10173, *Ammonia in Simulated Hanford Double-Shell Tank Wastes: Solubility and Effect on Surface Tension.*

Table 3-2 Radionuclide Concentration Limits for Treated LAW to WTP Vitrification. (For Information Only.)

Radionuclide	Radionuclide Concentration in Treated LAW to WTP Vitrification
^{137}Cs ratio	< 3.18 E-05 Ci/mol sodium
^{154}Eu concentration	< 1.8E-05 Ci/L
^{60}Co concentration	< 1.10E-06 Ci/L
^{90}Sr ratio	< 1.19E-03 Ci/mol sodium
^{99}Tc concentration	< 4.8E-04 Ci/L
^{239}Pu concentration	< 3.0E-05 Ci/L
^{233}U concentration	< 1.6E-07 Ci/L
^{235}U concentration	< 1.7E-09 Ci/L
TRU* ratio	< 1.30E-05 Ci/mol sodium
U fissile to U total	< 0.96 wt%

* Transuranic (TRU) is defined as alpha-emitting radionuclides with an atomic number greater than 92, with half-life greater than 20 years.

Table 3-3. Pre-Ion Exchange Design Source Term (Liquid Phase).

Ion Exchange Sizing Source Term		
Component	**Limit**	**Unit**
Potassium (min)	0	gmole/L
Potassium (max)	0.35	gmole/L
Cesium	1.04E-04	gmole/L
^{137}Cs	2.16E-05	gmole/L
^{137}Cs	2.57E-01	Ci/L
^{137}Cs: Total Cesium Ratio(max)[a]	0.24	
Shielding Design Source Term		
^{137}Cs	5.23E-01	Ci/L
^{137}Cs Max Loading for IX Columns	106,000	Ci

Table 3-4: Summary of Average Chemical components in Waste Feed for LAWPS Before Filtration

Component	Liquid Phase, gmole/liter	Solid Phase, gmole/liter	Component	Liquid Phase, gmole/liter	Solid Phase, gmole/liter
Ag+	5.20E-06	7.56E-08	Nd+3	1.57E-05	9.73E-07
Al(OH)4-	1.66E-01	0.00E+00	NH3	1.34E-02	0.00E+00
Al+3	0.00E+00	2.20E-06	NH4+	1.29E-04	0.00E+00
As+5	1.81E-04	6.40E-07	Ni+2	3.51E-05	2.62E-05
B+3	1.39E-03	1.89E-05	NO2-	1.02E+00	1.83E-03
Ba+2	2.64E-08	2.20E-07	NO3-	1.78E+00	2.79E-03
Be+2	7.09E-05	1.13E-06	O(BOUND)	1.11E-04	2.23E-05
Bi+3	1.00E-04	1.16E-05	OH(BOUND)	2.71E-03	1.63E-04
C2O4-2	1.27E-02	1.12E-03	OH-	1.41E+00	0.00E+00
Ca+2	1.91E-05	5.47E-05	Pb+2	7.26E-04	9.25E-06
Cd+2	2.00E-05	1.02E-06	Pd+2	4.52E-05	9.48E-08
Ce+3	9.05E-05	2.10E-06	PO4-3	4.32E-02	5.35E-06
Cl-	9.46E-02	1.41E-04	Pr+3	9.29E-05	6.93E-07
CN-	1.76E-05	1.29E-08	Rb+	1.38E-06	7.25E-10
Co+3	5.20E-05	1.70E-06	Rh+3	1.52E-04	4.74E-06
CO3-2	5.23E-01	4.54E-07	Ru+3	4.05E-05	1.86E-07
CrO4-2	8.01E-03	0.00E+00	Sb+5	8.21E-05	2.07E-07
CrOOH	1.73E-04	4.70E-07	Se+6	1.96E-04	5.87E-07
Cs+	1.04E-04	0.00E+00	Si+4	8.02E-03	1.16E-06
Cu+2	1.62E-05	6.37E-12	SO4-2	6.61E-02	5.55E-05
F-	6.51E-02	5.82E-05	Sr+2	6.69E-07	4.10E-07
Fe+3	5.23E-04	4.66E-04	Ta+5	1.84E-10	2.70E-06
H+	5.12E-02	0.00E+00	Te+6	2.78E-05	2.44E-06
H2O	4.74E+01	5.09E-05	Th+4	4.39E-05	8.87E-11
Hg+2	3.14E-05	1.43E-07	Ti+4	4.40E-05	1.02E-06
K+	1.22E-01	3.60E-04	Tl+3	1.60E-04	4.78E-06
La+3	8.07E-06	8.52E-07	TOC[b]	1.77E-01	9.45E-04
Li+	3.97E-04	2.92E-06	V+5	1.88E-08	9.62E-07
Mg+2	7.45E-04	2.02E-05	W+6	3.91E-05	4.40E-09
Mn+4	2.80E-05	3.28E-06	Y+3	1.42E-06	6.09E-08
Mo+6	1.86E-04	4.78E-07	Zn+2	9.99E-05	6.03E-07
Na+	5.61E+00	2.43E-03	Zr+4	1.98E-05	1.94E-07
Na+	5.61E+00	2.43E-03	Zn+2	9.99E-05	0.00E+00
Nd+3	1.57E-05	0.00E+00	Zr+4	0.00E+00	1.94E-07

3.2.2 Safety Related Critical Characteristics and Performance Criteria

1. Provide confinement of waste by providing a leak tight boundary between pressurized piping and equipment and the environment. This shall be covered by the following safety performance criteria:
   a. IX columns to be designed to ASME BPVC design and fabrication requirements as defined in Section 3.3.12.
   b. IX Columns to be designed for Safety Natural Phenomena Hazard Performance to SDC-3, Limit State D, NDC-3 as defined in Section 3.3.16. Particular attention shall be made to column nozzle deflections to ensure leak prevention at the remote connector during a seismic event.
   c. Inspection and testing requirements defined in Section 3.3.12.
2. Limit the accumulation of Flammable Gas in the IX Columns to an amount that if ignited would not breach the primary confinement boundary. This requirement shall be covered by the following safety performance criteria:
   a. Design the column pressure boundary to withstand pressurization as a result of a gas bubble ignition. BUYER to provide mass and type of flammable gas that will be ignited.
   b. Monitor flow through backpressure on each IXC and initiate the IX safety timer for column venting and recirculation if these parameters indicate conditions such that accumulation of flammable gas is possible. (This requirement is provided for information. BUYER has responsibility for this item).

3.2.3 Physical Characteristics

The IX Column dimensional characteristics shall be constrained by the limits defined in the associated DPD referenced in Section 3.0.

1. Service and Access

   IX column shall be designed for remote service during normal operation. Resin fill and discharge shall be designed through top pipe nozzles. Internal design features shall provide capability for complete resin removal using sluicing/flushing operations. No special tools shall be required for resin fill/replacement.

3.2.4 Environment

The IX Columns will be operated with the process conditions provided above and be installed in a shielded and ventilated concrete pit. The columns are not subject to outdoor environmental conditions other than for delivery and temporary storage (assume outdoor storage up to 1 year). Site storage conditions should be noted as they may exceed normal operating conditions.

Normal Vault/Pit Conditions:
Temperature range: 72°F to 108°F
Relative humidity: 0 to 100%.

Faulted Vault/Pit Conditions:
Temperature range: 34°F to 111°F
Relative humidity: 0 to 100%.

Delivery/Outdoor environmental conditions are provided for information:
Temperature range: -25°F to 115°F (direct sunlight)
Relative humidity: 0 to 100%.

NOTE: Faulted HVAC conditions are the equilibrium temperature range that will occur in the event of a prolonged HVAC outage. While the IX system will not operate during a prolonged HVAC outage, it shall be designed to withstand any additional thermally induced loads.

3.3 Design and Construction

The IX Column shall be designed and constructed per the requirements of this specification, associated drawings and data sheets.

3.3.1 Industry and Government Standards

The use of standard and commercial parts and processes shall follow the requirements governed by the documents listed in Section 2.0.

3.3.2 Radiation

1. Electromagnetic.

   N/A

2. Nuclear

   All components must withstand an integrated dose of 10^8 rads or greater per year.

3.3.3 Protective Coatings

3.3.3.1 Stainless steel materials are not to be painted.

3.3.4 Replaceability

3.3.4.1 The IX columns shall be replaceable. The position and orientation of nozzles and mounting features shall be controlled as identified on the DPD.

3.3.5 Identification and Marking

3.3.5.1 Each IX Column Assembly shall be identified as follows:

202LP-IXA-IX-IXC-200 IX LEAD COLUMN or

202LP-IXA-IX-IXC-201 IX LAG COLUMN

3.3.5.2 All equipment lifting points, center of gravity and the lifting weight shall be clearly marked.

3.3.6 Nameplate

3.3.6.1 Provide a nameplate per ASME Boiler and Pressure Vessel Code (BPVC), Section VIII in location shown on the DPD. Nameplate should include, as a minimum, the following:

- Equipment Identification Numbers:
  - 202LP-IXA-IX-IXC-200 for the Lead Column or
  - 202LP-IXA-IX-IXC-201 for the Lag Column
- Manufacturer's name
- Year built

- MAWP (Maximum Allowable Working Pressure)
- MDMT (Minimum Design Metal Temperature)
- Material of construction
- Weight of the vessel assembly, including internals and all permanently welded/fixed supports.

3.3.6.2 Additional manufacturer's nameplate, if any, shall be installed in like manner and adjacent to the ASME Boiler and Pressure Vessel Code (BPVC) nameplate. The nameplate shall be constructed of 300 series stainless steel compatible with the vessel shell material.

3.3.7 Human Factors Engineering

3.3.7.1 Human factors are not applicable to the column. The IX columns are located in a concrete pit and operated using remote valves. The column will be replaced remotely, if necessary, and with existing tools.

3.3.8 Qualification

3.3.8.1 Refer to Sections 4.4 through 4.5 for qualification requirements.

3.3.9 Document Submittals

3.3.9.1 General

This section provides the general procedures and requirements for preparing and processing engineering, design, fabrication, testing, and other submittals.

3.3.9.1.1 Refer to TFC-BSM-IRM_DC-C-07 for BUYER submittal process.

3.3.9.1.2 Refer to the Master Submittal Register (MSR), A-6009-317 accompanying this specification.

3.3.9.1.3 For each formal submittal (regardless document type), VENDOR shall complete transmittal letter A-6005-315, provided by BUYER.

3.3.9.1.4 The VENDOR shall track and record delivery and review status of submittals by maintaining a submittals list and retaining copies of Submittal Forms and letters of transmittal, itemizing delivered items and reports during the course of the work. Notes or markings added by hand shall be legible, utilizing permanent non-smearing marking media, such as ink or felt tip markers, in a contrasting color. An alternate means of recording delivery may be used with BUYER approval.

3.3.9.1.5 Requests for Information (RFI) shall be submitted on form A-6003-417 (provided by BUYER).

3.3.9.2 Submittal Type

3.3.9.2.1 This section only identifies the typical types of submittals required. The actual submittals are defined in the MSR.

3.3.9.2.2 The MSR provides a roadmap to the specific sections that contain submittals by reference in the "Applicable Section Submittal Reference" column.

3.3.9.2.3 The MSR lists the document/record, the type (Approval or Acceptance), the number of copies (paper and/or electronic), and the date required (this may be either actual date or a calculated date such as 10 days before fabrication).

3.3.9.2.4 Required submittals generally fall into one of two categories:

- Approval Required, prior to work (APP)
- Approval Not Required, for information/Record only (INF/REC)

3.3.9.3 Submittals for Approval

3.3.9.3.1 BUYER's review of VENDOR's drawings, or release of the items for shipment by BUYER's representative, shall in no way relieve VENDOR of the responsibility for complying with all the requirements of this specification and the purchase order.

3.3.9.3.2 For each IX Column included in the contract, the order shall include timely delivery of the following documents, as defined in box 17 on the MSR by the particular document.

A. Quality assurance program for design and fabrication.

B. Design software verification and validation report.

C. List of fabrication codes and standards.

D. Non-destructive examination procedures.

E. Calculations justifying the proposed vessel design. Calculations shall include, but not be limited to:

1. Code calculations. Design calculations shall include relevant ASME Section VIII, Division 1 formulas and source paragraphs, values used in the formulas, the calculated results and comparison with acceptable values. Where calculations are based on other than the ASME Section VIII, Division 1 formulas, the source of the formulas shall be referenced. Where computer program software is used for calculations, each calculation shall include a brief program description of the software shall be given, including the name and version of the program software. If the program software is not commercially available to industry, VENDOR shall maintain and provide, upon request, program software documentation

2. Seismic calculations including base horizontal seismic force and moment inclusive of fluid induced impulsive and convective forces, and loads for anchorage and anchor bolt design

3. Vessel loads including empty weight, operating weight and location of center of gravity

4. VENDOR shall provide primary load case and load combination reactions for design of the supporting anchorage, embedded plates, and structural steel.

5. Calculations associated with lifting and tailing lugs

6. Nozzle load analysis for local and gross effect, per WRC 297 and WRC 537.

7. Design of attachments; internal, external, lifting, and hold downs

8. Fatigue analysis as applicable for vessels in fatigue services

F. Design details of each welded joint uniquely identifying the parts joined by the weld. In some cases the use of AWS welding symbols, properly annotated, and applied to the fabrication drawings will suffice for this requirement.

G. A weld map identifying each weld joint by weld number on each column.

H. Weld procedure specifications (WPSs) and applicable procedure qualification records (PQRs) for all welds.

I. Welder and inspector qualification records.

J. Liquid penetrant material certifications.

K. A dimensional drawing for the pressure vessel, indicating all dimensions necessary for support, lift and shipping of the completed vessel. Tolerance held for such dimensions shall be noted, either on the specific dimension or in general notes. Dimensions locating centers of gravity which are generated by calculation shall be so noted on the drawing, and the calculations shall be submitted with the drawings.

L. Detail drawings shall give a complete dimensional and material definition of every part designed and fabricated specifically for the pressure vessel and internals. Parts available commercially with standard dimensions (i.e. - standard forgings, flanges, etc.) shall be identified by manufacturer and part number.

3.3.9.3.3 VENDOR shall submit the following plans for BUYER's approval:

A. Overall fabrication work plan.

B. Assembly plan

C. VENDOR shall provide a Fabrication Inspection and Test Plan which shall include the shop traveler summaries. Where applicable, the fabrication/heat treating sequence and methodology shall be addressed.

D. Functional acceptance test plan

E. Lifting and rigging plan.

F. Cleaning plan.

G. Packaging and shipping plan.

3.3.9.3.4 VENDOR shall submit a preliminary 60% equipment design review package. This package shall include:

A. Preliminary Calculations for the IX column and IX column supports.
B. Preliminary Drawings for the IX column showing internal design details, Final nozzle locations and IX column supports. These drawings need to provide enough detail to show a conceptual layout, including internals and interface dimensions.
C. Preliminary Datasheets that include vendor information and design and operating parameters.

3.3.9.3.5 VENDOR shall prepare a final data package for each IX Column assembly. Final data package submittal items shown in the MSR shall be submitted and approved by the BUYER prior to release for shipment. This package shall include:

A. Fabricators Certificate of Conformance.

B. Signature Verification sheet.

C. Receiving Inspection Reports.

D. VENDOR's Certificate of Conformance.

E. Certified Material Test Reports (CMTR) (including chemical and physical properties test results, and heat treat condition and corrosion test results as defined in the applicable Mechanical Datasheets (MDSs) or DPDs).

F. All submittals and records pertaining to the nondestructive examination (NDE), base materials, filler materials, fabrication, and inspection shall be traceable to the area and part inspected and shall be accessible for BUYER's examination.

G. VENDOR shall provide certified copies of the test reports including ASME Section VIII, Division 1, U-1 data reports as specified in the purchase order.

H. Liquid Penetrant Material Certification.

I. Fabrication Travelers.

J. Weld Inspection Reports.

K. Weld Maps.

L. Weld History Reports.

M. Nondestructive Examination Reports.

N. Nondestructive Testing Material Certification Reports.

O. Calibration Certificates/Reports.

P. Dimension Verification Reports (including critical dimensions).

Q. Fastener Tightening Reports.

R. Factory Acceptance and Pressure Test Reports.

S. Flushing Records: including a water test report to record compliance with 5.2 and records verifying acceptable completion of flushing.

T. Lift Test Records with weight certifications

U. Load test report for Below-The-Hook lifting device load tests.

V. Final Inspection Report

W. VENDOR shall provide a requirements compliance matrix demonstrating compliance with specification requirements.

X. Miscellaneous Inspection Reports.

Y. Non Conformance Reports (closed).

3.3.9.4 Product data (i.e., data sheets, material cut sheets, operation & maintenance manuals, etc.) in accordance with Quality Clause B33.

A. Test report for ASTM A262, Practice A tests.

B. Request for Information (pertinent to the fabricated assembly).

C. Approved Design Changes - Engineering Change Notices (ECN's) & Design Change Notices (DCN's).

D. Detailed As Built Drawings.

E. Calculations

F. CGI Report

3.3.10 Personnel and Training

Personnel shall be trained in accordance with their QA Program.

3.3.11 Parts/Materials/Processes

IX columns, including structural steel attachments and framework shall be fabricated from 300 series stainless steel (grade as specified on data sheets and DPDs). Certified Material Test Reports (CMTR) are required for all alloy and stainless steel materials used, including weld filler material in the fabrication of the column pressure boundary, column support and all column internals. For external non-pressure retaining or structural materials, a Certificate of Conformance (C of C) is acceptable.

The selection of parts, materials and processes used in producing the item shall follow the VENDOR's normal practices in meeting the requirements of the scope of work. Use of toxic or other restricted substances requires compliance with applicable regulations of government agencies or industry safety standards.

A. Materials shall be as specified on the Mechanical Datasheets (MDS) or DPDs.

B. Material standard editions dated within the previous 10 years from the date of Subcontract award are permissible, as long as VENDOR verifies that the physical and chemical properties of material meet the requirements of the cited standard editions.

C. Material substitutions shall not be made without BUYER approval. Unless otherwise stated by the VENDOR in the substitution-related RFI, a substitution request constitutes a representation that the VENDOR:

- Has investigated the proposed product or material and determined that it meets or exceeds the form, fit, function, and quality level of the specified product; and
- Will provide the same warranty for the substitution as for the specified product.

D. Materials shall be new and free from defects. Classification of fabrication materials shall be in accordance with ASME Section II. VENDOR shall furnish legible copies of the CMTRs from the manufacturer for materials comprising the primary containment, supports, weld filler material, and welded attachments, including temporary attachments welded to the vessel. Other materials shall be provided with certificates of conformance indicating that the material meets the requirements of ASME Section II.

3.3.11.1 Attachment point of spiders, braces, or other temporary attachments shall match the material of the vessel.

A. Austenitic stainless steel (P-No. 8) welding materials for pressure boundary and load bearing welds shall contain a minimum delta ferrite content of five percent. The maximum ferrite content shall not exceed 12 % for PWHT applications. Compliance with the minimum and maximum ferrite requirements may be based upon the certified chemical analysis and the WRC Delta Ferrite Diagram or a ferrite gage complying with AWS A4.2. Alternatively, for Shielded Metal Arc Welding (SMAW) electrodes and solid wire filler metal manufactured in the USA, a CMTR may be used to confirm acceptability of the ferrite requirements.

B. Material shall exhibit no chromium carbides or detrimental intermetallic phases as demonstrated by testing and accepting a minimum of one specimen per heat treatment lot in accordance with ASTM A262, Practice A.

C. Vessel plate materials to have a 2B surface finish per ASTM A480.

D. Plates in the descaled condition shall be free from damage, staining, or any form of contamination.

E. Welding consumables for welding P-No.1 materials with hardness limitations shall not exceed a weld deposit analysis of 1.0 percent nickel.

F. Certified Material Test Reports are required for all filler materials. Certified Material Test Reports for gas shielded consumables shall reflect that testing was done with the same gas (gas mixture) as used in production.

G. The storage, baking and drying of all welding consumables (i.e., covered electrodes, flux cored electrodes and fluxes) shall be as recommended by the manufacturer. Segregation of carbon steel, low alloys, and alloy consumables is required during storage, baking, holding, and handling (including portable ovens).

H. Shielding and purging gases shall be welding grade, having a dew point of less than or equal to (-) 40°F.

I. Contact materials shall be controlled and documented in accordance with VENDOR's inspection and test plan as approved by BUYER.

J. Contact materials including marking materials, temperature indicating crayons, adhesive backed and pressure sensitive tape, and barrier and wrap materials may be used only under the following limits:

- The total halogen content shall not exceed 200 parts per million (PPM).
- The total sulfur content shall not exceed 400 PPM.
- No intentionally added low melting point metals such as lead, zinc, copper, tin, antimony and mercury.
- Anti-spatter compounds shall not contain chlorine, fluorine, sulfur, mercury or other low melting point metals.
- Materials and residue shall be completely removed when no longer required.
- Cleaning materials may be non-halogenated solvents or potable water containing no more than 50 PPM chloride.
- Marking materials and liquid penetrant materials used on austenitic stainless steels and nickel base alloys shall not cause corrosive or other harmful effects. A

certification of content shall be furnished for each batch number of penetrant, cleaner, developer and emulsifier and shall include the test results that meet requirement of ASME Sec V Article 6 and latest mandatory addendum. CMTRs in accordance with Quality Clause B46 for penetrant materials shall be submitted for BUYER approval prior to fabrication.

3.3.12 ASME Process Vessels Fabrication

3.3.12.1 General

3.3.12.1.1 VENDOR shall substantiate any proposed changes to the MDSs, DPDs, specifications, and purchase order, and obtain approval from BUYER.

3.3.12.1.2 Unless otherwise specified, all vessels shall be designed and fabricated in accordance with ASME Section VIII, Division 1 or Division 2, requirements of this specification, the MDSs, DPDs, and the referenced drawings provided in the Contract.

3.3.12.1.3 Where defined on the MDSs or DPDs, pressure vessels shall be U stamped and registered in accordance with the National Board Inspection Code (NBIC) (NBBI NB23). VENDOR shall provide U-1 Form as a deliverable.

3.3.12.1.4 VENDOR shall consider design details, dimensions and material thickness shown on DPDs and MDSs as reference information. VENDOR shall provide design and specify applicable materials, dimensions, and thicknesses as required to meet code requirements.

3.3.12.1.5 If the MDSs or DPDs contain equipment cyclic data, VENDOR shall provide fatigue analysis.

3.3.12.1.6 The IX column are completely full. VENDOR shall utilize the process liquid density as stated on the MDSs or DPDs.

3.3.12.1.7 VENDOR shall provide vessel supports as illustrated on the DPDs. For the IX columns, locally increasing the thickness of the shell or head with an insert plate may be required to comply with loading.

3.3.12.1.8 Where practical, internal structural component welds shall be full penetration. Fillet welded attachments are subject to approval by BUYER.

3.3.12.1.9 All internal and external supports, support rings, pads, and structural brackets attached to the vessel shall be seal welded all around to prevent corrosion between the vessel and attachments. When seal welding all around is not practical, provision for drainage shall be made: e.g., a gap in the low- point weld and the proposed design submitted to the BUYER for approval. These welds shall be included in the weld map.

3.3.12.1.10 Pulled bends shall be specified in preference to using piping fittings; piping bends shall have a minimum bend radius of five times the piping diameter, unless specified otherwise. Where 5D pipe bends are not practical, VENDOR may submit for approval, use of 3D bends or long-radius pipe fittings.

3.3.12.2 Nozzles and Manways

3.3.12.2.1 At a minimum, nozzle wall thickness shall be per ASME Section VIII, Division 1, unless a greater thickness is specified on the DPDs. VENDOR

shall understand that minimum nozzle thicknesses indicated on the DPDs may not support the nozzle loading requirements specified on the MDSs or DPDs. VENDOR shall increase nozzle wall thickness or provide recommended design changes to meet the nozzle loading specified on the MDS or DPDs.

3.3.12.2.2 Nozzles and their reinforcements located on the head shall be located fully within the crown region of the head unless noted otherwise on the DPDs.

3.3.12.2.3 Figure 3-2 and Figure 3-3 illustrate acceptable and unacceptable nozzle configurations and welding for pressure vessel shells and heads.

3.3.12.2.4 All nozzles shall be set-in type or through type with full penetration welds as shown in Figure 3-2. All nozzles that are flush with the inside surface of the vessel shall be rounded to 1/8 inch minimum radius as shown in Figure 3-2.

3.3.12.2.5 Nozzles for pressure relief devices, vents, and drainage shall be flush with the inside surface of the vessel. Nozzles with internal projection in primary containment shall have an additional fillet weld between the internal projection and the inside surface of the shell or head.

3.3.12.2.6 Flange bolt holes shall straddle natural vessel centerlines unless otherwise specified.

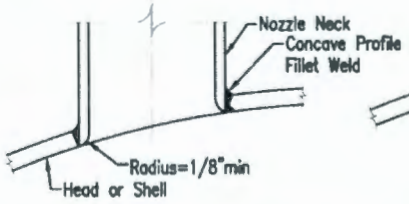

Set-In Nozzle with Full Penetration Weld for Fatigue Service

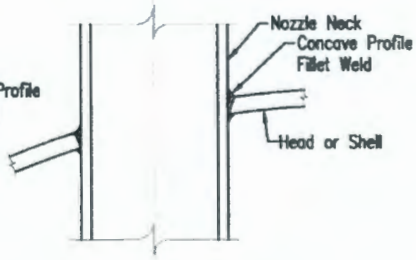

Through Nozzle for Fatigue Service

Figure 3-2 Acceptable Nozzle Connections

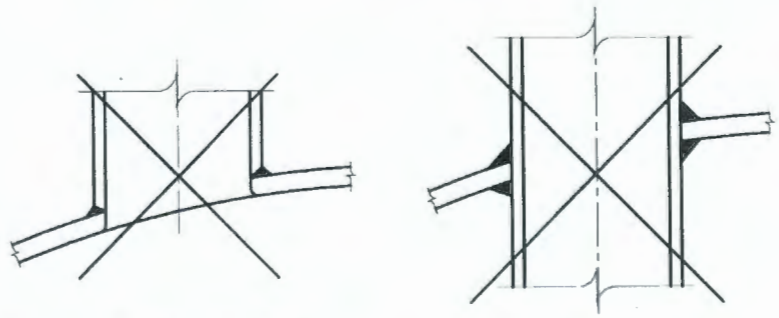

Figure 3-3 Unacceptable Nozzle Connections

3.3.12.2.7 The minimum nozzle design loads by nozzle size, for operating loads, weight, seismic and thermal expansion cases are as specified in the MDSs or DPDs. Loads act at the juncture of the nozzle and shell.

3.3.12.2.8 Equipment nozzle loads, where applicable, will be provided by BUYER after award. Primary nozzle load combinations to be considered in the design shall be:

Weight + Seismic + Operating Pressure + Operating Loads

Secondary nozzle load combinations to be considered in the design shall be:

Primary Loads + Thermal

3.3.12.2.9 Unless otherwise identified, the design loads specified in the MDSs or DPDs represent the minimum loads to be used for nozzle design.

3.3.12.2.10 VENDOR shall design nozzles according to the methods of WRC 297 & WRC-537, or BUYER approved analysis as applicable.

3.3.12.2.11 The nozzle loads specified in the MDSs or DPDs are for the piping connected to the external nozzle. If a nozzle is loaded internally to the vessel, whether due to operating loads or seismically induced fluid loads, design the nozzle for the sum of the internal and external loads.

3.3.12.2.12 If the wall thickness of the nozzle neck is greater than that of the connecting piping, the requirements of ASME Section VIII, Division 1, Figure UW 13.4 shall be satisfied.

3.3.12.3 Nozzle Reinforcement

3.3.12.3.1 For the IX column, all nozzle reinforcement shall be integral, as shown in Figure 3-4 regardless of Quality Level.

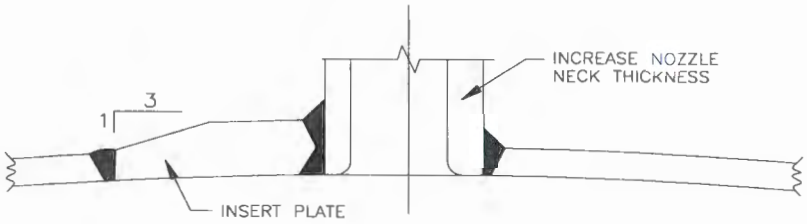
INCREASE NOZZLE
NECK THICKNESS
3
1
INSERT PLATE

Figure 3-4 Integral Nozzle Reinforcement Methods (For FQA & EQA Fabrication)

3.3.12.4 Internal Components

3.3.12.4.1 Design of support members for vessel internals shall be the responsibility of VENDOR. Internal supports shall use welded connections exclusively; no bolted connections.

3.3.12.4.2 VENDOR shall submit a preliminary layout for review prior to detail design for internal equipment and piping, including proposed support methods.

3.3.12.4.3 The design of internal supports shall consider stresses caused by differential thermal expansion, the shrink and swell of the resin, seismic loads and horizontal transportation of the vessel. The nozzles and internals shall be analyzed for effectiveness of design. Refer to ORNL/TM-2015/47, Confined Swelling Pressure Tests for Spherical Resorcinol Formaldehyde Resin.

3.3.12.4.4 VENDOR shall design support members to avoid the column of space directly below the inspection nozzle, instrumentation nozzles and equipment nozzles.

3.3.12.4.5 If indicated on DPDs, the internal surface of the head or shell subjected to direct impingement of process fluid shall be protected by a wear plate. See the MDSs or DPDs for the wear plate material.

3.3.12.4.6 VENDOR shall apply corrosion/erosion allowance to both internal and external surfaces of internal components and piping as defined on the MDSs or DPDs.

3.3.12.5 External Components

3.3.12.5.1 Lifting and tailing lugs shall be provided and installed by VENDOR.

3.3.12.5.2 Lifting attachments and below-the-hook lifting devices shall be provided in accordance with requirements in Section 5.5.

3.3.12.5.3 VENDOR is responsible for determining the necessity of stiffening rings per ASME Section VIII. Div.1, Part UG-29. The material shall match the material of the shell and attachment welds shall be continuous on both sides of the ring.

3.3.12.5.4 The materials welded to the shell shall match the material of the shell.

3.3.12.6 Seismic Design

3.3.12.6.1 The seismic design loads and acceptance criteria for the vessels, anchorage, and internal supports shall be correlated to the requirements in 3.3.16, Safety Natural Phenomena Hazard Performance Requirements.

3.3.12.6.2 The maximum deflection with respect to the support steel of any nozzle on the column shall not exceed 0.0625 inches. VENDOR is to coordinate structural support steel with BUYER support steel design.

3.3.12.6.3 The seismic design shall include impulsive and convective fluid induced loads per ASCE 4-98.

3.3.12.6.4 Vessel nozzles shall be designed for the seismic loads specified in the MDSs or DPDs in accordance with the vessel classification.

3.3.12.7 Fabrication

3.3.12.7.1 General

A. VENDOR shall, if necessary, provide temporary stiffening and jigging to prevent shell distortion during fabrication, welding processes, heat treatment, hydrostatic testing, and shipping. Temporary stiffening and jigging not required for shipping shall be removed before shipping. For stiffening and jigging that is welded in place, remove by grinding and perform NDE in accordance with fabrication NDE requirements.

B. Fabrication tolerances shall be in accordance with ASME Section VIII, Division 1, the Vessel DPDs, BUYER vessel standard details and any other applicable drawing defined in the contract documents.

C. The sequence of fabrication shall be planned to permit maximum access to the internal surfaces to enable examination of all welds.

D. Plates and pipes shall be cut to size and shape by machining, grinding, shearing, plasma, laser, or water jet cutting. Plates, 3/8 inch thick and above, cut by shearing, shall either be liquid penetrant tested on the sheared edge or have 3/8 inch allowance left on the edges which shall be removed by machining or grinding. All thickness of plate or pipe cut by air plasma cutting shall have the edges dressed to a smooth, bright finish. Material cut by the inert gas shielded plasma, laser or water jet process will not require further dressing other than de-burring. All lubricants, burrs, and debris shall be removed after cutting.

E. All stamps used for identification reference markings shall be of the low stress type. Stampings shall not be located near discontinuities.

F. If a butt welded seam is required between materials of different thickness, the thicker material shall normally be machined or ground on the side away from the process liquid. Machining shall ensure a smooth finished profile with no sharp corners and shall be in accordance with ASME Section VIII, Division 1.

G. When rolling any austenitic stainless plate, care shall be taken to prevent carbon pickup or contamination of rolled material. The work area shall be free of carbon steel grindings and general cleanliness shall be maintained to preclude carbon contamination.

H. Only stainless steel brushes, clean iron-free sand, ceramic or stainless steel grit shall be used for cleaning stainless steel or nonferrous alloy surfaces. Cleaning tools or materials shall not have been previously used on carbon steel.

I. Pipe bending methods, tolerances, processes, and material requirements shall comply with Pipe Fabrication Institute (PFI) Standard ES-24 and require BUYER's approval. These requirements shall apply equally to tube bending processes. The pipe shall not be terminated or butt welded within the bend; a straight length of 6 inches is recommended.

J. All temporary attachments shall be removed prior to shop hydrostatic test unless specifically approved by BUYER.

3.3.12.7.2 Layout Requirements

A. Plate size shall be chosen to minimize welding.

B. The longitudinal seams of adjacent shell courses shall be staggered by a minimum length (measured from the toe of the welds) of 5 times the plate thickness, or 4 inches whichever is greater. Where it is considered impractical to meet this requirement, VENDOR shall submit a proposed layout to BUYER for approval.

C. Plate layouts shall be arranged so that longitudinal and circumferential weld seams clear all nozzles and their limits of reinforcement. Additionally there must be a clearance of at least eight times the shell plate thickness between the toes of the affected welds. Any exception to this requirement will require BUYER's approval.

D. Structural attachment welds such as internal support rings or clips, external stiffening rings, insulation support rings, and ladder, platform or pipe support clips shall clear weld seams by a minimum of 2 inches. If overlap of pad type structural attachments and weld seams is unavoidable, the portion of the seam to be covered shall be ground flush and examined by radiography before the attachment is welded. The seam shall be radiographed per ASME Section VIII, Division 1, Part UW-51 for a minimum distance of 2 inches beyond the edge of the overlapping attachment. Radiographic examination of longitudinal weld seams is not required when single plate edge type attachments such as tray support rings, stiffening rings, insulation support rings, ladder, platform, or pipe support clips cross such weld seams.

3.3.12.7.3 Nozzles

A. For forged nozzles connecting to pipe of lesser wall thickness, VENDOR shall prepare the nozzles per ASME Section VIII, Division 1 Figure UW-13.4.

B. For shell openings specified with a welded cover (i.e. inspection nozzles), the cover shall be tack welded to the nozzle neck, prepared for field welding to the nozzle neck and sealed to prevent dirt and water from entering the vessel using adhesive tape. The cover shall be marked with the plant item number of the vessel.

C. Nozzles to be butt welded in the field shall be suitably extended and capped for hydrostatic testing. After testing, the caps shall be removed and the nozzle shall be prepared for field welding. The finished length shall be as stated on the DPDs.

3.3.12.7.4 Welding Requirements

A. All welds, including those for non-pressure parts and attachments, including temporary attachments, welded to pressure boundary components, shall be made by welders, welding operators, and welding procedures qualified under the provisions of ASME Boiler and Pressure Vessel (B&PV) Code, Section IX. The responsibility for welding to be used in ASME Code construction rests with VENDOR.

B. VENDOR's responsibility includes the following documents which shall be available for use by the welders/welding operators and for reference by BUYER:

- Selecting and preparing the Welding Procedure Specification(s) (WPS) suitable to the need.

- Preparing and providing a Procedure Qualification Record (PQR) documenting proof of the weldability of the variables described in the WPS.
- Preparing and providing a Welder Performance Qualification (WPQ) documenting proof of the welder's ability to deposit sound weld metal within the range of WPS parameters being used.
- Welder Qualification Continuity log.

C. All weld joints for pressure retaining applications shall have a minimum of two passes.

D. Where joints are welded from both sides, the first pass shall be backchipped, ground or arc-gouged to sound metal before welding the second side. This requirement shall be stated on the WPS.

E. Peening shall not be used. The use of pneumatic tools for slag removal is not considered peening.

F. Each layer shall be completed prior to starting the next layer (no block welding).

G. Vertical welding shall be vertical up unless approved otherwise by BUYER for each specific application.

H. For clad (or weld overlaid) plate, the following limitations apply:

- The cladding shall be stripped back a minimum of 1/4 inch from the edge of base material bevels by machining or grinding, not by flame or arc gouging. The removal shall not reduce the base material thickness below the design thickness. The method of verifying complete removal from this area shall be submitted for review.
- Overlay weld metal shall not be used for joining base metals to each other. Local repair cavities in overlay deposits that penetrate into the base material more than 10 percent of its thickness or 3/16 inch, whichever is less, shall have the base material re-welded with welding materials having properties consistent with the base material before completing the overlay repair.
- The ferrite content of deposited austenitic stainless steel weld metal may be determined using a gage (e.g. – ferrite scope) calibrated in accordance with AWS A4.2.

I. All attachments such as lugs, brackets, nozzles, pads and reinforcements around openings and other members (when permitted) shall follow the contour and shape of the surface to which they will be attached. The gap at all exposed edges to be welded shall not exceed the greater of 1/16 inch or one-twentieth of the thickness of the attachment at the point of attachment.

J. Joints shall be assembled and retained in position for welding. The use of manipulators or other devices to permit welding in the flat position should be employed where practical.

K. Temporary welds including tack welds shall be made by qualified welders using qualified weld procedures.

L. All low alloy, stainless steel alloy and nickel alloy welds shall be back purged with Argon. The purge shall be maintained until three layers or 3/16 inch of deposit has been welded. Purging applies to vessel shell and all piping butt welds, fillet welds and temporary attachments.

M. Misalignment (high-low) in butt joints shall conform to the applicable ASME Code requirements. Block welding and bridging is prohibited.

N. When welds are overlaid, each layer and the adjacent metal shall be cleaned to remove all surface discoloration prior to deposition of the next bead. The final weld surface may have intermittent, iridescent straw-colored oxides. This requirement also applies to the addition of Stellite alloy to the Vessel interior. Stellite overlays if required will be defined on the DPDs. Overlay and cladding procedures are to be approved per ASME BPVC part UCL.

3.3.12.7.5 Welding Process Limitations

A. Root Pass of Single Side Butt Welds without Backing (Open Butt). Only the following welding processes may be used and are subject to the limitations listed.

- Shielded Metal Arc Welding (SMAW)
  - A. EXX10 or EXX11 electrodes are permissible for welding P1 and P3 steels only
  - B. Impact test temperature not less than -20°F
- Gas Tungsten Arc Welding (GTAW)
  - A. Back purge two layers minimum for 2-1/4 Cr -1 Mo alloys and higher
  - B. Gas Tungsten Arc root passes for 2-1/4 Cr-1 Mo alloys and higher
- Gas Metal Arc Welding (GMAW)
  - A. Only pulsed spray or spray transfer may be used
  - B. GMAW short arc is prohibited

B. All Welding Except Root Passes for Open Butt. Only the following welding processes may be used and are subject to the limitations listed.

- Shielded Metal Arc Welding (SMAW)
  - A. Filler metal numbers F1 and F2 are not permissible for pressure retaining welds.
  - B. Filler metal number F3 is only permitted on P1 metals with 0.30% maximum carbon or 70 KSI maximum specified ultimate tensile strength; not permitted when base material requires impact testing below -20°F
  - C. Filler metal numbers F4 is permitted for all others.
- Gas Tungsten Arc Welding
  - A. Addition of filler metal is required (dry washing is prohibited)
- Gas Metal Arc Welding

A. GMAW-P — Pulsed axial spray transfer — No Limitations.

B. Continuous spray transfer — No Limitations.

C. For nominal pipe sizes (NPS) less than 6 inch, wherever possible all shop welding shall be rotated.

- Flux Cored Arc Welding (FCAW)

  A. Arc shielding gas is required for pressure retaining welds.

  B. Self-shielding FCAW consumables are prohibited.

- Submerged Arc Welding (SAW)

  A. Neutral flux (no active or alloy constituents) is required.

  B. Run on/run off tabs shall be used where possible.

  C. Unfuzed used fluxes shall not be reused.

3.3.12.7.6 Preheat and Interpass Temperatures

A. Preheat temperature shall be in accordance with the applicable Codes except that Code recommended minimum preheat temperatures shall be mandatory. Preheat requirements shall apply to all welding, including tack welding and welding of temporary attachments. Preheat requirements also apply to all thermal gouging and cutting operations except for P-1 steels. Preheat shall be maintained a minimum of 3 inches on either side of the joint.

B. For welds requiring preheating, the weld joint shall be completed with no intermediate cooling. Cooling under an insulating blanket is permitted provided that at least 30 percent of the joint depth has been filled and that applicable documents do not specify more stringent requirements.

C. The interpass temperature for austenitic stainless steels and nickel base alloys shall not exceed 350°F, or lower if as defined by welding rod manufacturer, except that for the hard facing of low carbon austenitic stainless steels, the interpass temperature shall not exceed 800°F.

D. Preheat shall be determined by temperature indicating crayons, contact pyrometers or other equally suitable means. Temperature indicating crayons used on austenitic stainless steels and nickel base alloys shall not cause corrosive or other harmful effects. It is VENDOR's responsibility to determine suitable brands that may be used. This information shall be made available to BUYER's representative if requested.

E. If oxy-fuel torches are used for preheating, the torch tip shall be appropriate for the work (i.e., a "rosebud," not a cutting or welding tip).

3.3.12.7.7 Post Weld Heat Treatment

A. Direct impingement by furnace burner flames is not permitted.

B. Only resistance, induction, furnace, or quartz lamp heating methods are permitted. Exothermic heat treatment shall require prior written authorization by BUYER.

C. When local PWHT is performed, all attachment areas, including areas from which attachments have been removed, shall be included.

3.3.12.8 Shop Quality Control

3.3.12.8.1 General Requirements

A. Each layer of welding shall be smooth and free of slag inclusions, porosity, excessive undercut, cracks and lack of fusion prior to beginning the next layer. In addition, the final weld layer shall be free of coarse ripples, non-uniform bead patterns, high crown, and deep ridges to permit the performance of any required inspection. All arc strikes, starts, and stops shall be confined to the welding groove or shall be removed by grinding. Welds containing cracks shall be locally repaired.

B. Temporary attachments shall be removed and areas finished smooth with the vessel shell. NDE, in addition to visual examination, shall be performed to ensure no cracks have been generated.

C. The test for maximum hardness of the deposited weld metal, if required, shall be made after any required heat treatment. If the weld fails to meet the acceptance criteria and either of two subsequent adjacent tests exceeds the specified hardness, the weld shall either be replaced or reheat treated and retested. The hardness requirement applies to the weld metal exposed to the process fluid. When not accessible, the opposite side shall be tested. Hardness readings shall be taken with a portable tester in accordance with ASTM A370.

D. Each weld shall be stamped with the welder's unique symbol or number identification using low stress stamps. Any alternative method of marking shall be submitted for BUYER approval.

E. Material control procedures. All submittals and records pertaining to the NDE, base materials, filler materials, fabrication, and inspection shall be traceable by heat number to the area and part inspected and be accessible for BUYER's examination. Material control shall include performance of positive material identification (PMI). The welded joints and components shall undergo PMI testing. The VENDOR shall perform PMI examination of the finished weld on the one point of each joint inside and outside for all weld joints. When access is not possible to the inside weld and/or weld size is small, examination of the outside of a weld only shall be acceptable. PMI shall be performed for the following low alloy / stainless steel / high allow materials:

- Low alloy steel containing more than 1 Cr – 0.5Mo and/or 3.5 Ni
- Type 316/316L stainless steel
- Type 321/347 stainless steel
- 11-13% Cr (Type 410/410S/40S)

3.3.12.8.2 Hold Points

A. VENDOR shall provide required notifications of verification points and shall not proceed past required hold points without written authorization from BUYER QA Representative.

B. Table 3-5 Fabrication Traveler Hold Points lists the minimum hold points to be incorporated into the fabrication traveler.

Table 3-5 Fabrication Traveler Hold Points

Prior to the first production weld for each weld procedure	Hold
Prior to NDE Inspection	Witness
Prior to Hydrostatic/Leak Test	Witness
Prior to Load Test	Witness
Prior to Final Inspection	Hold
Prior to Shipping	Hold

3.3.12.8.3 Shop Inspection General

A. The shell and head sections which are subjected to concentrated or large loads through welded attachments (such as lifting and tailing lugs or agitator mountings) shall be ultrasonically examined over 100% of the area prior to welding, in accordance with the following:

- For connections or attachments directly welded to the shell or head, the area tested shall extend 3 inches beyond the extremity of the proposed weldment
- For connections or attachments welded via a reinforcement or doubler plate, the shell area tested shall extend 5 inches beyond each side of the perimeter of the proposed fillet weld attaching the reinforcing or doubler plate to the shell or head

B. All full penetration welds attaching internal or external structural components to the heads or shell shall be ultrasonically tested. If fillet welds are permitted by BUYER they may be dye-penetrant tested with approval from BUYER.

C. Records of the NDE and other tests shall be submitted to BUYER as defined in Section 3.3.9, Document Submittals.

D. All welds joining the nozzle neck to the shell or heads, that are not radiographed or ultrasonically tested shall be liquid penetrant tested.

3.3.12.8.4 Shop Inspection for FQA and EQA Quality Level Vessels

A. In addition to the general inspection requirements, FQA and EQA vessels shall be inspected as specified in this section.

B. Radiography is the preferred method of NDE and shall be specified where possible. Where it is considered impractical to perform radiographic examination due to joint configuration, VENDOR may propose ultrasonic examinations for BUYERS considerations.

C. The following welds shall be subject to NDE as specified:

i. All welds forming part of the primary containment, including weldments joining nozzles to the vessel shell or head shall be 100% inspected using radiography.

ii. Where a main seam butt weld is located such that only part of its length lies within the Primary Containment, the complete length of that particular seam shall be inspected.

D. All butt welds in internal piping shall be 100% volumetrically inspected.

E. Where components attach to any part of the vessel by full or partial penetration tee weld (including a corner weld), the parent plate in the vicinity of the weld shall be ultrasonically tested prior to welding, to ensure that no defects are present that could result in laminar type tearing during welding.

F. The following component welds shall be ultrasonically examined:

- Supports for vessel internals
- Vessel supports where a small local area of the vessel takes the support load (Ultrasonic Inspection is not required for skirt or ring supported vessels).

3.3.12.8.5 Non-Destructive Examinations

A. Radiography, ultrasonic testing, and liquid penetrant examination, where specified or required, shall be performed in accordance with ASME Section VIII, Division 1 and ASME Section V. NDE procedures shall be submitted to BUYER for review and approval prior to fabrication.

B. All mandatory nondestructive examination (visual, surface flaw and radiography) of vessel shall be carried out after the completion of fabrication, including any heat treatment.

C. Visual weld inspections shall be performed by certified weld inspectors.

D. Ultrasonic testing, where specified by BUYER or proposed by VENDOR, shall be in accordance with Appendix 12 of ASME Section VIII, Division 1.

E. Radiographic acceptance criteria shall be in accordance with ASME Section VIII, Division 1, Paragraph UW-51 where full radiography is required or UW-52 where spot radiography is required.

3.3.12.8.6 Hardness Testing For Austenitic Stainless Steel

A. Hardness testing is required when austenitic stainless steel plate is cold formed to make sections such as angles and channels. This requirement is not applicable to the cold forming of dished heads, which is covered by the relevant section of ASME Section VIII, Division 1.

B. Hardness testing is required when austenitic stainless steel pipe is cold formed for bends with a centerline radius less than three times the nominal pipe diameter.

C. Any cold forming process, which may significantly increase hardness, shall be in accordance with an approved procedure, which contains hardness testing. The procedure shall be submitted for BUYER's approval.

D. Hardness testing shall be performed on areas subject to the greatest deformation after cold working or any rework or rectification; the maximum permitted hardness shall not exceed that allowed by the applicable material standard and grade.

E. If the maximum permitted hardness is exceeded, VENDOR shall perform heat treatment per Section 3.3.12.7.7, Post Weld Heat Treatment

3.3.12.8.7 Acceptance Testing

A. Leak Tests

- If gas or pneumatic leak testing is selected, VENDOR shall conduct the tests in accordance with ASME B&PVC Section V, Article 10.
- Reinforcing pad attachment welds and accessible surfaces of inside nozzle to vessel wall welds shall be tested for leaks with 15 PSIG dry air or nitrogen and bubble forming solution.
- The leak test shall be performed prior to the final hydrostatic test.

B. Hydrostatic Test

- The hydrostatic test shall be performed after any specified leak tests.
- The vessel hydrostatic test shall be performed in accordance with ASME B&PVC, Section VIII, Division 1, Part UG-99 as specified on the MDSs or DPDs.
- The vessel hydrostatic test shall be performed prior to application of any specified coatings or painting.
- All welds shall be sufficiently cleaned and free of scale or paint prior to hydrostatic testing.
- Testing of vessels or components made of austenitic stainless steel materials shall be conducted with potable water containing no more than 50 PPM chloride.
- For vessels, before application of the test pressure, the test water and the vessel material shall be allowed to equalize to approximately the same temperature. The temperature of the pressure resisting components during the pressure test, regardless of test media, shall be at least 30 °F warmer than the minimum design metal temperature to be stamped on the nameplate, but need not exceed 120 °F.
- The final hydrostatic test pressure shall be held for a minimum of one hour.
- Test water shall not be in contact with austenitic stainless steel for more than 72 hours, unless treated with a BUYER approved biocide.
- After completion of the hydrostatic test, the vessel and internal piping shall be drained, dried, cleaned thoroughly inside and outside to remove grease, loose scale, rust, and dirt and closed as quickly as practicable.

C. Obstruction Inspection

- VENDOR shall ensure and document that all internals, internal piping, and jacketing are free from obstructions.

- If visual inspection cannot confirm lack of obstructions, a flow test shall be performed on internal piping and jackets as specified on the MDSs or DPDs.

D. Final inspection

- Final inspection of the completed vessel shall be the sole responsibility of VENDOR.
- The finished dimensions and cleanliness of the vessels shall be inspected to confirm compliance with the relevant drawings and specifications after completion of all tests.
- All inspection documentation should be complete with all inspection signatures and assembled as defined in Section 3.3.9, Document Submittals.
- Overall visual inspection shall be performed to confirm vulnerable equipment items to include but not limited to small bore piping, and seals, etc., are free from damage.
- Inspection shall be performed to confirm equipment and nozzle orientations are correct.
- Inspection shall be performed to confirm that all structural and equipment bolt tightening has been completed to manufacturer requirements.
- Inspection shall be performed to confirm that surface finish matches design documents.
- Inspection shall be performed to confirm labeling includes the correct item identification and marking in compliance with Section 3.3.5, Identification and Marking.
- VENDOR shall prepare a final inspection report for each contract item, which documents the results of the final inspection.

3.3.12.8.8 Source Quality Control

A. Orders for pressure vessels shall be subject to random fabrication-site inspections by BUYER or his designee.

B. All records pertaining to base materials, filler materials, fabrication, and inspection including welder's qualification record shall be accessible for BUYER's examination

C. VENDOR shall make a complete set of BUYER approved drawings and other documents available to BUYER's representative at the time the quality surveillance activities are being conducted.

D. BUYER's review of VENDOR's drawings, or release of the vessel for shipment by BUYER's representative, shall in no way relieve the VENDOR of the responsibility for complying with all the requirements of this specification and the purchase order.

3.3.13 Structural Support Steel

3.3.13.1 Structural Steel Materials

3.3.13.1.1 Structural Materials (Non-pressure retaining, and not in contact with process liquid)

Stainless steel furnished as bulk material or delivered as fabricated assemblies shall be as follows unless otherwise noted on the design drawings, except for vessels:

3.3.13.1.2 Shapes and Bars: Conform to ASTM A276, Type 316/316L.

3.3.13.1.3 Plates: Conform to ASTM A240, Type 316/316L.

3.3.13.1.4 Pipe: Conform to ASTM A312, Grade TP 316/316L.

3.3.13.1.5 Bolts: Conform to ASTM A193, Grades B8 or B8M, Class 1.

3.3.13.1.6 Nuts: Conform to ASTM A194, Grade 8 or 8M, heavy hex.

3.3.13.1.7 Studs: ASTM A276 Nitronic 60 as shown on DPDs.

3.3.13.1.8 Washers: Cut from plate Conforming to ASTM A240, type 304 or 304L, or machined from bar stock that meets ASTM A193, B8 or B8M, Class 1. Dimensions in accordance with ASTM F436.

3.3.13.1.9 Welding Filler Metal: Conform to AWS D1.6

3.3.13.2 Shop Fabrication for Structural Steel

3.3.13.2.1 Structural steel elements shall be fabricated in accordance with the requirements of AISC N690.

3.3.13.2.2 Substitute sections or modification of design details shall be permissible only with the Buyer's written approval prior to fabrication.

3.3.13.2.3 Welding shall be performed in accordance with AWS D1.6.

3.3.13.2.4 Inspection and examination of welds shall be in accordance with AWS D1.6.

3.3.13.2.5 Welding Filler Material shall meet the quality standards of and be supplied in accordance with AWS D1.6 and the following additional requirements:

- Control shall be established and implemented, with objective evidence through supplier's records, to ensure that only correct and accepted items and materials are used. Consumed filler material lot or heat numbers shall be documented on one or more of the following record: drawings, weld map, shop travelers, inspection reports, etc.
- The VENDOR shall submit an inspection plan covering the inspections to be performed on weld filler metal for Buyer's review. VENDOR shall submit their Material Control Procedure for controlling, issuance, handling, storage, and traceability for welding metals.

3.3.13.3 Bolts

3.3.13.3.1 The IX Columns are supported on a seismic flange using a remote remote bolting design. Refer to the DPD's for details of the bolting materials and important alignment details.

3.3.13.3.2 All bolts required for erection shall be in clearly marked containers and included with the first shipment of fabricated steel for each unit or structure unless alternate shipping methods are authorized, in writing by the BUYER.

3.3.13.3.3 All bolting materials shall be CMTR certified.

3.3.13.3.4 Refer to Section 4.3.6, Suspect/Counterfeit Parts.

3.3.13.4 Coatings

N/A

3.3.13.5 Galvanizing

N/A

3.3.14 I&C Requirements for Packaged Units

N/A

3.3.15 Electrical Requirements for Packaged Mechanical Equipment

N/A

3.3.16 Safety Natural Phenomena Hazard Performance Requirements

3.3.16.1 Definition of Limit State and NPH Design Criteria

3.3.16.1.1 NPH Design Criteria

For safety related SSCs associated with the specification, the required NPH and respective design criteria are:

- For earthquake hazards: Seismic Design Category (SDC) SDC-3 Limit State D.

Loads resulting from NPH events shall be considered to act concurrently with normal operating loads (dead and occasional loads, pressure, thermal, etc.) and shall be combined by absolute sum.

3.3.16.1.2 Seismic Requirements

The SDC-3 seismic input shall consist of in-structure response spectra (ISRS) for the structures at the elevations at which the SSCs are mounted. The seismic input for qualification by testing, the Required Response Spectrum (RRS), shall exceed the applicable ISRS by a factor of 1.4:

$$RRS > 1.4 \times ISRS$$

Damping for seismic qualification shall be as specified in ASCE 43, Table 3-2.

3.3.16.1.3 Temperature

See Section 3.2.4.

3.3.16.1.4 Methods of Qualification

The seismic qualification of SSC shall be by one (or a combination) of three methods as delineated below. Additional requirements and guidance are provided in Section 3.3.16.5, Requirements for Qualification Methods of this specification.

Seismic is the only applicable NPH requirement.

3.3.16.1.5 Analysis

Analysis in accordance with ASME QME-1, the code applicable to the system or component is the preferred method for passive mechanical equipment and distribution systems. Any of the following methods are acceptable for quantifying seismic response:

- Equivalent static method
- Response spectrum method
- Time history
- Complex frequency response method

3.3.16.1.6 Testing

N/A

3.3.16.1.7 Experience Data/Similarity

Equipment may be qualified by similarity to previously qualified equipment. Qualification by similarity must address:

- Materials, arrangement/configuration and dynamic similarity of the components
- Seismic input of previously qualified equipment must envelope ISRS of new components

3.3.16.2 Acceptance Criteria for Limit States

ASCE 43 Section C8.0 and Table C8.1 provide guidance for acceptable codes and standards for qualification by analysis for all types of SSC for SDC-3 seismic loads. Limit state D is applicable to the IX Columns.

Alternatively the following guidance may be followed.

- The following alternative criteria may be used instead of those codes recommended in ASCE 43 Table C8.1:
  1. Piping and valves (excluding non-manual operators) – ASME B31.3.
  2. Pressure Vessels – All vessels may be in accordance with ASME B&PVC, Sec. VIII, Div. 2.

3.3.16.3 Other Requirements

A. NPH qualification of SSC must address the end-of-life condition. The SSC qualified life considerations depend on the qualification method. For example:
   - Testing – Determine the need for environmental qualification for effects such as degradation of non-metallic materials in high temperature or radiation environments.
   - Analysis – Deduct corrosion/erosion allowance when calculating stresses. Address degradation mechanisms beyond general wall thinning such as cracking and fatigue.

B. Anchorage to structural steel shall be in accordance with AISC 360, Specification for Structural Steel Buildings.

C. To avoid adverse interaction, Non-safety SSCs shall be isolated from Safety SSCs. If it is not feasible or practical to isolate them, these Non-

safety SSCs shall be analyzed according to the same criteria as applicable to the Safety SSCs (i.e., subjecting these to the same level of seismic motion) and evaluating them using acceptance criteria such that these cannot adversely interact with any Safety SSCs.

D. For Non-safety SSCs attached to Safety SSCs, the dynamic effects of the Non-safety SSCs shall be simulated in the modeling of Safety SSCs. Attached Non-safety systems such as piping or raceways, shall also be designed up to the first anchor beyond the interface in such a manner that the Non-safety SSC will not adversely impact or cause a failure of the Safety SSCs.

~~1.1.1.1 Testing – Determine the need for environmental qualification for effects such as degradation of non-metallic materials in high temperature or radiation environments.~~

~~1.1.1.1 Analysis – Deduct corrosion/erosion allowance when calculating stresses. Address degradation mechanisms beyond general wall thinning such as cracking and fatigue.~~

~~1.1.1.1 Anchorage to structural steel shall be in accordance with AISC 360, Specification for Structural Steel Buildings or Load and Resistance Factor Design (LRFD).~~

~~1.1.1.1 To avoid adverse interaction, Non-safety SSCs shall be isolated from Safety SSCs. If it is not feasible or practical to isolate them, these Non-safety SSCs shall be analyzed according to the same criteria as applicable to the Safety SSCs (i.e., subjecting these to the same level of seismic motion) and evaluating them using acceptance criteria such that these cannot adversely interact with any Safety SSCs.~~

~~1.1.1.1 For Non-safety SSCs attached to Safety SSCs, the dynamic effects of the Non-safety SSCs shall be simulated in the modeling of Safety SSCs. Attached Non-safety systems such as piping or raceways, shall also be designed up to the first anchor beyond the interface in such a manner that the Non-safety SSC will not adversely impact or cause a failure of the Safety SSCs.~~

3.3.16.4 In-Structure Response Spectra

Preliminary In-structure response spectra will be provided by the BUYER during the initial VENDOR design period for the preliminary design. Table 3-6 can be used for preliminary design in lieu of preliminary In-Structure response spectra. Subsequent LAWPS-specific in-structure response spectra will be provided to the VENDOR for design of the final submittals.

Table 3-6. LAWPS SDC-3 Ground Response Spectra (5% Damped)

FREQUENCY (Hz)	SA-HOR (g)	SV-VERT (g)	FREQUENCY (Hz)	SA-HOR (g)	SV-VERT (g)	FREQUENCY (Hz)	SA-HOR (g)	SV-VERT (g)
100	0.293	0.2135	5.263	0.7941	0.468	0.667	0.1686	0.0955
58.824	0.2937	0.214	5	0.7941	0.4593	0.625	0.1573	0.0906
50	0.294	0.2142	4.545	0.7941	0.4436	0.588	0.1474	0.0861
40	0.2943	0.242	4.167	0.7941	0.4297	0.556	0.1387	0.0822
33.333	0.2967	0.2692	4	0.7941	0.4233	0.526	0.1309	0.0786
30.303	0.3129	0.285	3.846	0.7941	0.4173	0.5	0.1239	0.0753
25	0.348	0.3193	3.571	0.7594	0.4061	0.455	0.1088	0.0676
23.81	0.3576	0.3288	3.333	0.7294	0.396	0.417	0.0967	0.0613
22.727	0.367	0.338	3.125	0.7011	0.3804	0.385	0.0867	0.056
21.739	0.3761	0.347	2.941	0.6756	0.3664	0.357	0.0784	0.0515
20.833	0.3852	0.356	2.778	0.6524	0.3536	0.333	0.0714	0.0476
20	0.3937	0.3644	2.632	0.631	0.3419	0.313	0.0654	0.0443
18.182	0.4143	0.3849	2.5	0.6115	0.3311	0.294	0.0603	0.0414
16.667	0.4342	0.4048	2.381	0.5935	0.3212	0.278	0.0557	0.0387
15.385	0.4533	0.4239	2.273	0.5768	0.3121	0.263	0.0518	0.0365
14.286	0.4727	0.4433	2.174	0.5613	0.3036	0.25	0.0483	0.0344
13.333	0.4916	0.468	2.083	0.5469	0.2957	0.238	0.0452	0.0326
12.5	0.5085	0.468	2	0.5334	0.2882	0.227	0.0424	0.0309
11.765	0.5265	0.468	1.818	0.497	0.2667	0.217	0.04	0.0295
11.111	0.5441	0.468	1.667	0.4644	0.2476	0.208	0.0377	0.028
10.526	0.5612	0.468	1.538	0.4363	0.2312	0.2	0.0357	0.0268
10	0.578	0.468	1.429	0.3993	0.2105	0.182	0.0313	0.024
9.091	0.6105	0.468	1.333	0.3676	0.1928	0.167	0.0279	0.0218
8.333	0.6418	0.468	1.25	0.3402	0.1775	0.154	0.025	0.0199
7.692	0.6719	0.468	1.176	0.3163	0.1643	0.143	0.0226	0.0183
7.143	0.7011	0.468	1.111	0.2954	0.1528	0.133	0.0206	0.017
6.667	0.7294	0.468	1.053	0.2769	0.1427	0.125	0.0188	0.0157
6.25	0.757	0.468	1	0.2603	0.1336	0.118	0.0174	0.0147
6	0.7749	0.468	0.909	0.2351	0.1235	0.111	0.0161	0.0138
5.882	0.7838	0.468	0.833	0.2141	0.1149	0.1	0.0139	0.0122
5.75	0.7941	0.468	0.769	0.1965	0.1075			
5.556	0.7941	0.468	0.714	0.1815	0.1011			

3.3.16.5 Requirements for Qualification Methods

3.3.16.5.1 Dynamic Analysis

- Methods

  The dynamic analysis shall be accomplished using the response spectrum, frequency domain or time-history approach. Time-history analysis shall be performed using either the direct integration method or the modal superposition method.

- Modeling

  Unless a more complex model, e.g., a finite element model, is required, the equipment shall be represented by a lumped-mass system consisting of discrete masses connected by weightless springs. The criteria used to lump masses shall be as follows:

The number of masses shall be chosen so that all significant modes are included. The modes are considered as significant if the corresponding natural frequencies are less than 33 Hz and the stresses calculated from these modes are greater than 10% of the total stresses obtained from lower modes. This approach is acceptable provided at least 90% of the loading/inertia shall be contained in the modes used. Alternately, the number of degrees of freedom is taken more than twice the number of modes with frequencies less than 33 Hz. Missing mass shall be accounted for in developing the design forces and moments.

Mass shall also be lumped at the following points:

- Where a significant concentrated weight is located (e.g., the motor in the analysis of pump motor stand, the impeller in the analysis of pump shaft, etc.).
- Where there is a significant change in either the geometry or stiffness

3.3.16.5.2 Equivalent Static Analysis

Equivalent static analysis method may be used in lieu of a dynamic analysis if the system or component can be realistically represented by a simple model. A static analysis shall be performed by applying equivalent static forces at the mass locations in two principal horizontal directions and the vertical direction. The equivalent static force at a mass location shall be computed as the product of the mass and the seismic acceleration value applicable to that mass location. The seismic acceleration values shall be as follows:

- Single Mode Dominant Response

  When the mass associated with a mode exceeds 75% of the total mass, the response is considered as a single mode dominant response. In this case, the acceleration value corresponding to the dominant mode frequency from the applicable in-structure response spectrum shall be used, provided the value of the dominant mode frequency is equal to or greater than the value of the frequency corresponding to the peak acceleration. In case the value of the dominant mode frequency is less than the value of the frequency corresponding to the peak acceleration, the peak value of the in-structure response spectrum acceleration shall be used.

- Multiple Mode Dominant Response

  1.5 times the peak acceleration value of the applicable in-structure response spectrum shall be used.

- Total Seismic Response

  The total seismic response shall be computed by combining the co-directional responses from the two horizontal and the vertical analyses by either the Square Root of the Sum of the Squares (SRSS) method, or the Component Factor Method (1/0.4/0.4).

3.3.16.5.3 Seismic Qualification of Equipment by Testing

Testing procedures presented in IEEE Standard 344 shall be followed. The actual mounting of the equipment shall either be simulated or duplicated. All normal loads acting on the equipment shall be simulated. The seismic load shall be defined by the Required Response Spectrum (RRS) obtained by enveloping and smoothing (filling in valleys) the in-structure spectra computed at the supports of the equipment by linear elastic analyses, and multiplied by a factor of 1.4. The Test Response Spectrum (TRS) of the shake table shall envelop the RRS.

- Recommended Frequencies

  The fundamental frequencies of equipment and components shall preferably be less than one-half or more than twice the dominant frequencies of the support structure.

3.3.16.5.4 Multiple Supported Systems and Components

The inertial response shall be calculated using an upper bound envelope of individual response spectra for the support locations. The relative seismic support displacement, i.e., seismic anchor motion, shall be computed. The response from the relative seismic support displacement analysis shall be combined with the response from the inertial loads by the SRSS method. In lieu of the response spectrum approach, time histories of the support motions may be used.

4.0 QUALITY ASSURANCE REQUIREMENTS

All specific requirements of ASME NQA-1 Part I and Part II that apply to this procurement are identified in the VENDOR's QAP.

4.1 General

4.1.1 This section delineates the quality assurance (QA) requirements and processes that will be utilized to execute this contract. Additional QA requirements may be delineated in the design documents and other contractual documents. For a listing of applicable Quality Clauses see Table 4-1 Procurement Quality Clauses.

4.1.2 The VENDOR agrees to incorporate the appropriate QA requirements of this section and those requirements specified elsewhere in the contract into their subcontracts and purchase orders for all lower-tier VENDORs and suppliers utilized in the performance of this contract, as the QA requirements apply for the services or items being provided. The VENDOR shall communicate these QA requirements to their personnel, suppliers, and lower-tier VENDORs so that items and work activities provide for safe and reliable construction.

4.1.3 The VENDOR shall provide access to its facility, documents and records, applicable to the performance of this contract for BUYER's review and assessment. The VENDOR shall flow down this "right of access" requirement to its sub-tier VENDORs and suppliers. The VENDOR shall coordinate the review or assessment of sub-tier VENDORs' and suppliers' facilities, documents and records with the BUYER.

4.1.4 The VENDOR is required to have and use a quality assurance program that is consistent with the requirements of ASME NQA-1 in accordance with Quality Clause

B04, Quality Assurance Requirements for Nuclear Facility Applications, including applicable addenda requirements that are identified in the statement of work (SOW) for this contract. The VENDOR's QA program will be reviewed, evaluated, and approved for BUYER through an onsite audit and has been added to their Evaluated Supplier List (ESL) prior to award of the contract.

4.1.5 If selected for oversight, the BUYER will co-ordinate with the VENDOR to conduct scheduled and periodic oversight of activities or products associated with this scope of work.

4.1.6 For pressure vessels, the VENDOR shall maintain a ASME BPVC Division 1 certified program in accordance with Quality Clause B07.

4.1.7 Nonconformance documentation and reporting shall be in accordance with Quality Clause B22.

4.1.8 Personnel performing weld inspections shall be certified in accordance with Quality Clause B25.

4.1.9 Nondestructive weld examination personnel shall be qualified in accordance with Quality Clause B31.

4.1.10 All required instruments and equipment shall be provided with a certificate of calibration in accordance with Quality Clauses B12 and B61.

4.1.11 Inspections and test reports shall be in accordance with Quality Clause B52.

Table 4-1 Procurement Quality Clauses

PREAWARD AND SUPPLIER FABRICATION	
B01	Quality Assurance Program Submittal and Pre-award Survey
B04	Supplier Quality Program Evaluation
B07	Certified Quality Program
B12	Supplier Use of Calibrated Equipment
B13	Fabrication/Inspection/Test Plan
B14	Supplier Use of Software Controlled Instruments and Equipment Containing Embedded Software (Firmware)
B15	Supplier Use of Commercial off the Shelf Software
B18	Supplier Use of Spreadsheet Calculations Using Commercial off the Shelf Software
B22	Nonconformance Documentation and Reporting
B25	Certified Weld Inspector (CWI)
B28	Welding Procedures and Qualifications
B31	Nondestructive Examination Process
MATERIAL IDENTIFICATION	
B33	Identification of Items with Product Datasheets
TESTING AND TEST DATA	
B46	Liquid Penetrant Material Certification
B49	Certified Material Test Report
B52	Inspection and Test Report
B58	Calibration Report
B61	Certification of Calibration
INSPECTION AND ACCEPTANCE CRITERIA	
B76	Procurement of Potentially Suspect or Counterfeit Items
B79	Certification of Conformance

4.2 QA Submittals

4.2.1 VENDOR shall submit a Quality Assurance Program (QAP) in accordance with Quality Clauses B01 and B04. *[Approval Required]*

4.2.2 VENDOR shall submit changes to the VENDOR QAP. *[Approval Required]*

4.2.3 VENDOR shall submit to the BUYER all VENDOR-generated Corrective Action Reports (CAR) and nonconformance reports, (NCRs) regardless of proposed disposition. VENDOR-generated nonconformance reports having proposed dispositions of "REWORK", "REJECT", "REPAIR", or "USE-AS-IS" shall not have the proposed disposition implemented until the BUYER has agreed in writing with the VENDOR's proposed disposition. *[Approval Required]*

4.2.4 VENDOR shall submit to the BUYER all VENDOR-generated nonconformance reports upon completion and closure of the approved disposition implementation.

4.2.5 VENDOR shall submit Fabrication Work Control Documents prior to starting fabrication work. *[Approval Required]*

4.2.6 VENDOR shall submit completed Fabrication Work Control Documents as soon as the work and documentation are complete. *[Approval Required]*

4.3 Specific Quality Assurance Requirements

4.3.1 VENDOR Design

Design calculations shall be provided to the BUYER for review incorporating preliminary in-structure response and subsequently for final approval having incorporated the final LAWPS Site-specific in-structure response approval prior to initiating the final design. Engineering calculations and analysis shall be fully checked by a qualified individual other than the originator, and shall be signed and dated as checked. All final submittals of calculations shall be bound and shall include the title and purpose of the calculation, a table of contents or index, complete list of references, design basis and complete list of assumptions (if any), methodology, and sufficient information to allow independent verification of the calculation. VENDOR shall follow Quality Clauses B15 and B18 as applicable.

The VENDOR shall implement and maintain a quality assurance program in accordance with applicable requirements of NQA-1 Part II Subpart 2.7 and 2.14 for control of software used for calculation or analysis where the results are not checked by alternate methods.

4.3.1.1 The VENDOR shall identify the software and version used or applied with each document, calculation, and/or analysis which shall be traceable to a documented verification and validation.

4.3.1.2 Verification and Validation shall be documented covering the range of the results and shall be conducted in accordance with the applicable QA program. The copy of the verification and validation package shall be provided with each calculation or analysis.

4.3.1.3 The BUYER shall define the quality assurance (QA practices) methodology applied during activities utilizing software. The VENDOR shall identify what industry standard or commercial practice methodology is followed for the design, development, testing, and change control of their software.

4.3.1.4 The VENDOR shall describe the process for reporting and documenting software problems/errors, evaluating impacts of problems on measurements and uses, and determining the appropriate corrective action(s).

4.3.1.5 When subcontracting any portion of this specified work, the VENDOR is required to invoke the applicable quality assurance program requirements on their supplier(s) and evaluate and qualify suppliers in accordance with these QA requirements. The BUYER reserves the right to verify the quality of work at the VENDOR's facility, including any supplier facilities.

4.3.1.6 All revisions to submitted calculations, as a result of comments by the BUYER or design changes by any sub suppliers, however minor, shall be resubmitted.

4.3.1.7 Design verification shall be performed to ensure the design adequately meets design criteria, the design is technically adequate, and the design meets applicable requirements for quality, safety, and performance. The

VENDOR shall have responsibility for the performance and documentation of all design verifications associated with this specification.

A. The equipment design shall be verified in accordance with the VENDOR's NQA-1 compliant design verification procedures. The BUYER will review and approve the VENDOR's design in the submittal review process.

B. VENDORs developed multiple-use and single use spreadsheets shall be developed and verified in compliance with VENDORs NQA-1 compliant calculation verification procedures.

Provisions for involvement by an Independent Qualified Registered Professional Engineer (IQRPE) with the VENDORS's work to ensure appropriate certifications are available to support the environmental permitting process. WAC 173-303-640 (3)(a) states that, "Owners or operators of new tank systems or components must obtain a written assessment reviewed and certified by an IQRPE in accordance with WAC 173-303-810 (13)(a) attesting that the...system has sufficient structural integrity and is acceptable for the storing and treating of dangerous waste". (Refer to complete WAC citation for all required elements of this certification). The IQRPE will need to review the completed design in order to prepare a written assessment. In addition, WAC 173-303-640(3)(c) states that, "The owner or operator of a new tank system must ensure that proper handling procedures are adhered to in order to prevent damage to the system during installation". Some inspections by an IQRPE may be required during the fabrication and assembly stage to identify potential defects "prior to covering or enclosing a new tank system." The IQRPE services are covered under an existing contract with the BUYER. The VENDOR will be required to accommodate the IQRPE to review the completed design, review fabrication planning documents to identify any IQRPE hold or witness points, and during execution of the required inspections.

4.3.2 Inspection and Testing

4.3.2.1 Inspections and testing including the documentation required by the contract shall be performed by qualified VENDOR Quality Control personnel or third party, who is independent of the work being performed. Quality Control personnel or third party shall be trained and qualified in accordance with the VENDOR's or third party approved QAP.

4.3.2.2 The VENDOR shall develop and submit work control documents (e.g., fabrication, inspection, and test plans) for items to be fabricated by the VENDOR or their lower–tier supplier in accordance with Quality Clause B13. The work control document shall delineate details for performing the fabrication including inspections and testing required by the contract. The BUYER will identify BUYER's required inspection points, include third party inspections, during review of the work control documents.

4.3.2.3 The VENDOR shall submit completed fabrication work control documents to BUYER for approval. The VENDOR shall perform a final acceptance review to verify that all steps have been completed and that required documentation (e.g., weld records, installation inspection reports, material inspection reports, pressure test reports, coating inspection reports, etc.)

has been included. Final acceptance shall be signified by signature and date on the work control document.

4.3.2.4 When BUYER's "hold" points are identified in the work control document, the VENDOR shall provide at least 48 hours advance notice.

NOTE: A BUYER's "hold" point may be waived by correspondence (e.g., e-mail) from the BUYER, which will be included with the work control document.

4.3.3 Receipt Inspection

4.3.3.1 VENDOR's procured permanent plant items shall be receipt-inspected by the VENDOR in accordance with their QAP prior to delivery to the work site. Items may be receipt-inspected at the site shops but prior to delivery at the installation area.

NOTE: Special receipt inspection requirements apply to VENDOR-procured items that are designated by the BUYER as Safety Significant. See Section 4.4 of this section for details.

4.3.3.2 When VENDOR fabricates BUYER permanent plant items, the Fabrication Work Control Document shall identify the final inspection(s) necessary for the BUYER to accept the fabrication. The BUYER's inspection personnel shall perform final inspection(s). The BUYER's inspection personnel shall indicate final acceptance of the fabricated item on behalf of the BUYER. Normally, application of an acceptance tag will indicate acceptance and authorize the VENDOR to install the fabricated item.

4.3.3.3 When BUYER permanent plant items are provided, the VENDOR shall inspect and document all furnished items prior to accepting custodial responsibility. Discrepancies identified during inspection shall be immediately brought to the BUYER's attention. The inspection shall include as applicable:

- Labels, tagging and/or general identification of items.
- Quantity of items received.
- Dimensional, physical, and other characteristics
- Any visible damage to packaging (e.g., water marks, oil stains, crushed container, etc.).
- Any visible damage to items (e.g., corrosion, scaling, cracks, broken pieces, obstruction or damage to rotating equipment, etc.).
- Condition of visible coatings and/or paint.
- Protective covers and seals installed.
- Cleanliness of items.

4.3.4 Noncompliances and Nonconformance

4.3.4.1 The VENDOR shall assure that services and processes that do not meet the requirements of the contract are identified, mitigated or controlled, and corrected. Noncompliances that have significant cost, schedule, quality,

safety, health or environmental implications shall be investigated to determine the extent of the noncompliance and its causes.

4.3.4.2 The VENDOR shall verify that actions taken to correct noncompliances are complete and adequate to prevent recurrence. The relevant responses, actions required, verifications, and other documentation shall be transmitted to BUYER upon closure.

4.3.4.3 The VENDOR shall either correct nonconforming items immediately, or control them to prevent inadvertent use, installation, or testing.

4.3.4.4 The VENDOR shall control nonconforming items by segregating affected items in a clearly identified and designated hold area, marking or tagging the items to indicate they are nonconforming, or instituting other measures approved by BUYER.

4.3.4.5 The VENDOR shall notify BUYER whenever nonconforming items cannot be restored to their original, specified condition (i.e., nonconformance dispositioned "REPAIR" or "USE-AS-IS").

4.3.4.6 In selected cases, nonconforming item may be conditionally released for work or installation provided the nonconforming condition is not affected and the corrective action can still be performed. The BUYER shall be notified of such cases to authorize a conditional release. Otherwise, nonconforming items shall not be released until corrective actions have been completed and verified.

4.3.5 VENDOR Procurement of FQA Safety Significant Items/Materials

4.3.5.1 Items designated by the BUYER as FQA shall be procured by the VENDOR when contractually indicated to do so in the Statement of Work.

4.3.5.2 When the FQA item or material is available from an evaluated supplier on BUYER's Evaluated Supplier List (ESL), the procurement must be conducted strictly in the following manner.

- The FQA item or material must be available from a supplier listed on the BUYER's ESL.
- The FQA item or material must be within the scope of provision of the ESL supplier, as indicated on the ESL (e.g., pipe is provided by pipe suppliers, not by structural steel suppliers).

  NOTE: the BUYER's Procurement Quality Clauses (i.e., "B" clauses) may be used as a shortcut method for delineating the VENDOR's procurement requirements to the supplier.
- The Quality Assurance requirements listed on the VENDOR's proposed procurement document must equal the Quality Assurance requirements specified for the supplier on the BUYER's ESL.

4.3.5.3 When the FQA item or material is not available from a supplier on the BUYER's ESL, the FQA item or material must undergo a commercial grade item dedication. The provisions of ASME NQA-1 for Commercial Grade Items (CGI) shall be by the VENDOR. The VENDOR shall be responsible

for dedicating Safety Significant items or materials under their own QA program.

To facilitate the procurement of items or materials that are intended to be dedicated, the VENDOR must submit their proposed procurement document to the BUYER for approval before ordering, in accordance with the following:

- Critical Characteristics for CGI (refer to section 3.2.2) shall be formally identified on a BUYER-provided form (A-6002-544). A CGI dedication plan shall be prepared by the VENDOR and approved by the BUYER prior to the VENDOR ordering items or material to be dedicated.
- The VENDOR shall only order the FQA item or material upon receipt of written authorization from the BUYER.

4.3.6 Suspect/Counterfeit Parts

Items furnished for this subcontract shall not include Suspect/Counterfeit Items (SCI) in accordance with Quality Clause B76.

4.3.7 Measuring and Test Equipment

4.3.7.1 Measuring and Test Equipment (M&TE) shall be properly calibrated, maintained, and controlled in accordance with Quality Clauses B12, B14, and B61.

4.3.7.2 Perform calibration at specified intervals based on the type of equipment, required accuracy, frequency of use, stability characteristics, and other conditions affecting performance. Calibration shall have accuracy traceable to national standards (where they exist), and calibration standards shall have the accuracy to ensure that the M&TE will have the required tolerances. Maintain records and mark equipment to show calibration status.

4.3.7.3 When M&TE is found to be out of calibration, the VENDOR shall have a method to identify its use since the last calibration and methods to re-verify acceptability of items previously tested.

4.4 Acceptance Criteria

All design, fabrication, and testing shall meet or exceed the acceptance criteria contained in this Specification and referenced codes and standards. Deviations from acceptance criteria shall be reported and resolved as described in Section 4.3.4.

Methods used to accept an item or service shall be a Certificate of Conformance, source verification, receiving inspection, Fabrication Acceptance Test (FAT), or post installation test on site, or a combination of these methods.

Certificate of Conformance:

1. The certificate shall identify the purchased material or equipment, such as by purchase order number.
2. The certificate shall identify the specific procurement requirements met by the purchased material or equipment, such as codes, standards, and other specifications. The procurement requirements identified shall include any approved changes, waivers, or deviations applicable to the subject material or equipment.

3. The certificate shall identify any procurement requirements that have not been met, together with an explanation and the means for resolving the nonconformance.
4. The certificate shall be signed or otherwise authenticated by a person who is responsible for the quality assurance function and whose function and position are described in the VENDOR's Quality Assurance Program.
5. The certification system, including the procedures to be followed in filling out a certificate and the administrative procedures for review and approval of the certificates, shall be described in the VENDOR's Quality Assurance Program.
6. Means shall be provided to verify the validity of the VENDOR's certificates and the effectiveness of the certification system.
7. Verification of VENDOR's certificates and certification system shall be conducted at intervals commensurate with VENDOR's past quality performance.
8. In certain procurement actions that do not involve source verification, an item or service may be accepted from a VENDOR based on a receiving inspection and a VENDOR's Certificate of Conformance stating that the specified requirements have been met and any specific supplemental documentation, such as material certificates or reports of tests performed, may be required by procurement documents. Acceptance by this method is satisfactory when the item or service is of simple design and involves standard materials, processes, and tests. Such items may be fabricated subject to selected qualification, sample, or batch testing to establish or maintain maximum quality.

4.5 Inspections and Tests

4.5.1 Fabrication Acceptance Test Plan

4.5.1.1 VENDOR shall prepare a Fabrication Acceptance Test Plan and submit for BUYER approval prior to undertaking any testing activities. The Fabrication Acceptance Test Plan shall include, but not be limited to the following:

- Weld examinations as defined by the requirements of Section 3.3.
- Physical measurement inspections against design documents to ensure critical dimensions are met.
- Pressure and leak testing of each completed IX column assembly as defined by the requirements of Section 3.3.12.8.

4.5.2 Fabrication Acceptance Test Report

4.5.2.1 VENDOR shall prepare a Fabrication Acceptance Test Report with the results of the Fabrication Acceptance Test per the Fabrication Acceptance Test Plan.

4.5.3 Functional Test Plan

4.5.3.1 VENDOR shall prepare a Functional Test Plan including, but not limited to the following:

- Operability and performance tests using BUYER-supplied oxidized sRF resin (mechanical resin)
- The ability to remotely fill the IX column.
- The ability to remotely remove the resin through a top nozzle. Less than 1% of total bed volume can remain after resin removal.

- IX lift tests shall be conducted using VENDOR designed lifting beam to demonstrate the ability to remotely install/remove the IX Column into/from the mounting plate. This demonstration will include remote removal of hold down bolts.
- Flow testing to verify operating parameters in the IX process cycle as defined in Section 3.2.1 using water.

4.5.4 Functional Test Report

4.5.4.1 VENDOR shall prepare a Functional Test Report with the results of the Functional Test per the Functional Test Plan.

5.0 PREPARATION FOR DELIVERY

5.1 General

VENDOR shall receive, clean, package, store, preserve, handle, and ship Structures, Systems and Components to protect against physical damage, or any effect that would affect quality or cause deterioration at all times while items are located on the VENDOR's premises in accordance with ASME NQA-1-2008 (Edition) and ASME NQA-1a-2009 (Addenda); NQA-1-2008/1a-2009, Quality Assurance Requirements for Nuclear Facility Applications, Part II, Subpart 2.2. Classification of items and packaging will follow the guidelines of ASME NQA-1. All IX Column components shall be classified as Level B Items. VENDOR shall submit a Packaging, Storage, Shipping, and Handling (PSSH) Plan. The PSSH plan shall include all plans, procedures, and drawings that address how items will be packaged, stored, shipped, and handled in accordance with the requirements described throughout this specification with the exception of topics covered by the Lift and Rigging Plan described in Section 5.5.

Items subject to deleterious corrosion shall be protected in accordance with NQA-1 (e.g. using either contact-preservatives, inert gas blankets, or vapor-proof barriers with desiccants to absorb any moisture inside the container). The VENDOR shall submit for BUYER approval a description of the preservation methodology specific to each package level type.

5.2 Preservation and Packaging

Methods of cleaning and preservation shall meet the requirements specified in ASME NQA-1-2008 (Edition) and ASME NQA-1a-2009 (Addenda); NQA-1-2008/1a-2009 Part II Subpart 2.1. Cleaning - Flush IX column interior and associated piping and valves with water for 2 minutes minimum, and until effluent is clean and contains no visible particulate matter. Flushing pressure shall not exceed maximum operating pressure of the component. Flushing water supply shall have sufficient capacity to produce a flow velocity of 4 to 6 ft/s in largest pipe size, with pipe full.

Each column shall be completely drained of all liquid prior to shipment. VENDOR shall be responsible for all damage which occurs as a result of improper drainage.

Contact With Different Metals - Any item containing or comprised of austenitic stainless steel or nickel based alloys shall be stored, handled, and constructed in a manner that prevents direct contact with materials such as carbon steel, lead, zinc, copper, mercury, halogenated material, low melting elements, and any chloride containing material.

Prior to packaging an item, vendor shall provide visual internal inspection to ensure the inside of the columns are empty, clean and dry with no remaining resin. Debris/contamination shall be removed using VENDOR's documented and approved standard procedure, unless specified otherwise. The interior surfaces of IX columns, valves and associated piping shall meet the ASME NQA-1

cleanness classification of Class B Cleanness. The surface shall appear clean and free of organic films and contaminates, when examined in accordance with ASTM A 380, and show no deleterious contamination when subjected to a wipe test of ASTM A 380. Wipe tests shall be made prior to the application of any preservative film (if required to maintain Class B level during storage period, prior to installation). Exterior surfaces of the IX column shall meet the requirements of Class C Cleanness. VENDOR shall provide cleaning records that show the item has been cleaned as appropriate prior to packaging.

All equipment openings shall be capped, plugged or sealed in accordance with NQA-1 to prevent entry of foreign material and humidity and protected against corrosion and physical damage.

5.3 Packing

Exterior package type shall provide the level of protection required based on the storage and environmental limits. Containers, crates and skids shall be used as the methodology for packaging.

5.4 Marking

Package marking shall follow the requirements of ASME NQA-1-2008 (Edition) and ASME NQA-1a-2009 (Addenda); NQA-1-2008/1a-2009 Part II Subpart 2.2 and at a minimum shall appear on two sides of a container, preferably on one side and one end. Package markings shall be applied with waterproof ink or paint in characters that are legible.

When information relative to handling and special instructions is required, such information shall be preceded by the word CAUTION in letters that are at least 1/2 in. (12.7 mm), as permitted by package size. Alternatively if tags or labels are used, they shall be affixed to the container using a waterproof adhesive, tacks where practical, or a corrosion-resistant wire.

Clearly mark partial deliveries of component parts of equipment to identify equipment and contents to permit easy accumulation of parts and to facilitate assembly.

Prior to shipment, all packages shall be clearly and suitably tagged to identify, at a minimum:

1. BUYERS name with destination address
2. VENDOR's name with return address
3. Package numbers showing the Purchase Order (PO) Number followed by the package number and the total number of packages
4. Package contents description
5. Weight of package
6. Center of gravity
7. Parts list (for each package)
8. Handling instructions (e.g., Fragile, Center of Gravity, Keep Dry, This Side Up, Sling Here, Do Not Freeze) and stacking limitations, as appropriate
9. Special instructions (Desiccant Inside, Special Inspection, Storage, Unpacking Restrictions, etc.) as appropriate
10. Marking of items not within a container, such as pipe, tanks, and heat exchangers, shall exhibit the above specified information in a location that is in plain unobstructed view. Marking may be applied directly to bare metal surfaces, provided it has been established that the marking material is not deleterious to the item.

11. If any hazardous chemicals are included with shipments, the transport vehicle shall display the relevant Department of Transportation labels/placards.

5.5 Handling

5.5.1 Lift and Rigging Plan

VENDOR shall provide a Lift and Rigging Plan to cover the lifting and handling instructions for each lifted item (entire package as well as individual items that are uncrated). The plan shall describe the lift points, special lifting devices and/or hardware needs, and lift diagrams. Lift diagrams shall be dimensioned drawings for each equipment/assembly indicating all dimensions and tools necessary for support, lift and shipment of the lifted item. Tolerances for such dimensions shall be noted, either on the specific dimension or in general notes. Dimensions locating centers of gravity shall be generated by VENDOR calculation and shall be noted on the drawing, and the calculations shall be submitted with the drawings demonstrating that the requirements of this section have been satisfied. These drawings shall be provided with the PSSH plan described in Section 5.1.

5.5.2 Lifting Attachments and Equipment Design

The lifting attachment(s) on the equipment (lifting eyes, lugs, ears, etc.) and the lifted item shall be designed in accordance with the following procedure except ASME BTH-1 should be used to verify lifting lugs hole diameter compared to the shackle pin diameter (the D to d ratio). The design shall consider equipment orientation, i.e., horizontal to vertical.

A. Estimated Weight of item: Determine the dead weight of each item by calculation, or from indicated weight from a calibrated load measuring device reading (if available). For reference, describe how the weight information was obtained.
B. Weight Contingency Factor: Increase the estimated weight by 5% for items that are solid or for which void fill is already accounted for in the estimated weight.
C. Dynamic Lifting Force: Increase the resultant weight from Step B by 25% to account for dynamic loads from crane operations.
D. Design Weight: The weight to be used in the structural analysis is the weight from Step B (including contingency factor) multiplied by the 1.25 factor from Step C. In most cases, the design weight is the estimated weight times (1.05) times (1.25).
E. Material Properties: Use appropriate technical references, and provide reference to sources in calculations.
F. Evaluation of Stresses: Use the appropriate requirements to calculate stresses using the Design Weight. Current editions of Codes or other referenced documents should be used for the evaluation. The calculations should include the following items as a minimum:
    1. Use Design Weight from Step D above.
    2. Use 45 degree minimum sling angle from horizontal for items with more than one pick point. An angle greater may be specified in the design and shown on the drawings to reduce the lateral load component. List the minimum sling length required to maintain the specified sling angle.
    3. For multiple pick points: use 2 lift points if there are 2 total, use 3 lift points if there are 3 total, and use 3 lift points if there are 4 total to determine the force per pick point. Divide the Design Weight by the number of pick points, at 45° or the specified angle, allowed for analysis. Note: This is applicable only if the weight is evenly distributed throughout the multiple pick points. Determine adequacy of lifting points (vertical, horizontal and resultant loads, as appropriate).
    4. Determine adequacy of welds.

G. Design Ratio: Determine the design ratios for the resultant stresses in each component. The design ratio is the allowable stress per AISC 360 divided by the calculated stress (Step F).
H. When a minimum design ratio is less than 1, either a more detailed analysis is required; the lifting point must be modified, repaired, or replaced; or the method of lifting changed. The revised detailed analysis or the analysis for the new lifting point (replacement or repaired) shall be included in the package.
I. Maximum Allowable Rated Capacity: Determine the Maximum Allowable Rated Capacity by multiplying the Design Weight (Step D) by the minimum design ratio obtained in Step G.

5.5.3 Lift Point Marking

Lift points for packages and individual components shall be clearly identified.

5.5.4 Critical Welds

1. All critical welds shall be identified in the VENDOR's design media.
2. For the purpose of this requirement, critical welds are defined as those welds whose failure could result in loss of load or loss of load control.
3. All critical welds on lifting devices shall be full-penetration welds, if possible.
4. Critical welds shall be verified by Non-Destructive Examination.

5.5.5 Special Lifting Devices

Any special handling devices needed for assembly or installation shall be identified and supplied with the equipment. VENDOR provided structural and mechanical lifting devices shall meet the requirements of DOE/RL-92-36. All lifting devices shall be rated for outdoor service as defined in Section 3.2.4.

5.5.6 Below-the-Hook Device Markings

BTH lifting devices shall be provided with markings in accordance with ASME B30.20 and tags in accordance with DOE/RL-92-36. In addition to the requirements of ASME B30.20 and DOE/RL-92-36, the marking shall include Hanford drawing number (if applicable), special lifting instructions, and clearly indicate lifting attachments. The marking shall be in the form of a name tag, name plate, or other permanent marker.

5.6 Transportation and Storage

All components, unless specified otherwise in this section or related sections, shall be compatible with being transported by public roadway to contract specified destination. Items shall either be self-supporting or provided with packing and dunnage so as to ensure their stability and protection from damage. Each IX column shall be weather protected for transport.

Equipment shall be packaged, supported, and secured to the transport vehicle in a manner so it can withstand a 0.8g (forward) hard-braking stop, and rearward or lateral acceleration of 0.5g, as well as, shock and vibration loads associated with transportation. Calculations that demonstrate compliance with these requirements shall be included in the Packaging, Storage, Shipping, and Handling (PSSH) Plan described in Section 5.1. Note that this is the minimum requirement; if a supplier has more stringent requirements, the supplier's requirements shall be applied. Where equipment is braced internally, it shall be marked to identify removal.

Each unit shall be completely drained of all liquid prior to shipment. VENDOR shall be responsible for all equipment damage which occurs as a result of improper drainage and storage. Metal-seated

valves shall be shipped in the closed position. Resilient seated valves shall be shipped in the open position.

5.7 Shipping

All equipment shall be shipped in accordance with the applicable DOT standards and in an orientation ready for lifting. Additional handling of the equipment to orientate it for lifting is not acceptable.

5.7.1 Transport and Tie-Down Instructions

VENDOR shall provide instructions and diagrams for securing all shipping packages. Transportation tie-down points shall be identified on the equipment. Lift points shall not be used for tie-downs. Calculations will be required for the design of all transport tie-down attachment points.

5.7.2 Unpacking and Assembly Drawing

VENDOR shall provide a dimensioned drawing that includes receiving instructions, unpacking instructions, and on-site assembly instructions (if equipment is shipped in a disassembled state). These drawings shall be provided with the PSSH plan described in Section 5.1.

5.7.3 Offloading

Offloading at BUYER designated delivery site will be performed by the BUYER or a BUYER-designated representative.

6.0 NOTES

Not Used

SPECIFICATION

15-2-005

IN-TANK TRANSFER PUMPS SPECIFICATION

AECOM ATKINS AREVA

LOW ACTIVITY WASTE PRETREATMENT SYSTEM

Project No. 31269 (T5L01)

Document No. 15-2-005

CSI Section 43 26 00

Safety Related ☒ Non-Safety Related ☐

IN-TANK TRANSFER PUMPS SPECIFICATION

Prepared for

Washington River Protection Solutions, LLC

Revision: 0 Status: Final

BRIAN DENNIS SEVERSON
STATE OF WASHINGTON
53874
REGISTERED
PROFESSIONAL ENGINEER

5/16/17

FOR PERMITTING
GDS 5/16/17

AECOM ATKINS AREVA

Project Number: 31269 (T5L01)
Doc. No.: 15-2-005
Date: May 16, 2017
Revision: 0

REVISION PAGE

Project Name:	LAWPS	**Discipline:**	Mechanical
Client:	Washington River Protection Solutions	**Project Number:**	31269 (T5L01)
		Latest Revision:	0

REVISION SIGNATURES

S. Baker Sam Baker Digitally signed by Sam Baker Date: 2017.05.16 09:29:49 -07'00'		D. Skeath David Skeath Date: 2017.05.16 09:51:07 -07'00'	
Prepared by	**Date**	**Approved by (SDE/Lead)**	**Date**
B. Severson Brian Severson Digitally signed by Brian Severson Date: 2017.05.16 09:40:14 -07'00'		P. Bell Paul Bell Digitally signed by Paul Bell Date: 2017.05.16 14:08:13 -06'00'	
Checked by	**Date**	**Approved by (QA)** For DP	**Date**
S. Lin SiYuan Lin 2017-05-16 13:45:06		D. Priebe Michael Schultze Digitally signed by Michael Schultze Date: 2017.05.16 14:10:17 -06'00'	
Verified by (if required)	**Date**	**Approved by (PEM)**	**Date**

Status	Rev. No.	Date	Prepared By	Pages	Description of Changes
Final	0	5/16/17	S. Baker	52	Approved for Bid

Safety Related	**Quality Level**
Yes ☒ No ☐	Full QA ☒ Enhanced QA ☐ Commercial QA ☐

TABLE OF CONTENTS

1.0 PART 1 - GENERAL 1
1.1 Section Scope 1
1.2 Related Sections 3
1.3 Codes and Standards 3
1.4 System Descriptions 5
1.5 Submittals 6
1.6 Delivery, Storage & Handling 12
1.7 Quality Assurance 16
1.8 Site Conditions 18

2.0 PART 2 - PRODUCTS 20
2.1 Manufacturers 20
2.2 Materials 20
2.3 Equipment 22
2.4 Components 22
2.5 Fabrication 31
2.6 Shop Quality Control 38

3.0 PART 3 - EXECUTION 40
3.1 Preparation (Not Used) 40
3.2 Erection, Installation & Application (Not Used) 40
3.3 Field Quality Control (Not Used) 40
3.4 Adjusting And Cleaning (Not Used) 40
3.5 Demonstration (Not Used) 40
3.6 Protection (Not Used) 40

4.0 LIST OF APPENDICES 41
4.1 Appendix A – Quality Level Summary Table for In-Tank Transfer Pumps 41
4.2 Appendix B – Supporting Document(s) Issued With This Specification 41
4.3 Appendix C – Hanford Tank Farm Pump Lifting Bail Design 41

LIST OF TERMS

Abbreviations and Acronyms

Term	Definition
ANSI	American National Standards Institute
API	American Petroleum Institute
ASCE	American Society of Civil Engineers
ASME	American Society of Mechanical Engineers
ASNT	American Society for Non-Destructive Testing
ASTM	American Society for Testing and Materials
AWS	American Welding Society
BHP	Brake Horsepower
BQR	BUYER Quality Representative
BTR	BUYER's Technical Representative
CAWI	Certified Associate Welding Inspectors
CFR	Code of Federal Regulations
CGD	Commercial Grade Dedication
CMTR	Certified Material Test Report
CoC	Certificate of Conformance
CSI	Construction Specifications Institute
CQA	Commercial Quality Assurance
CWI	Certified Welding Inspectors
DCN	Design Change Notice
DOE	Department of Energy
DPD	Design Proposal Drawing
EQA	Enhanced Quality Assurance
FAT	Factory Acceptance Test

Term	Definition
FQA	Full Quality Assurance
HI	Hydraulic Institute
IEEE	Institute of Electrical and Electronics Engineers
LAWPS	Low Activity Waste Pretreatment System
M&TE	Measuring and Test Equipment
MTBF	Mean Time Between Failure
NCR	Nonconformance Report
NDE	Non-Destructive Examination
NEMA	National Electrical Manufacturer's Association
NFPA	National Fire Protection Association
NPSH	Net Positive Suction Head
$NPSH_A$	Net Positive Suction Head Available
$NPSH_R$	Net Positive Suction Head Required
NRTL	Nationally Recognized Testing Laboratory
OSHA	Occupational Safety and Health Administration
PMI	Positive Material Identification
PQR	Procedure Qualification Record
PSSH	Packaging, Storage, Shipping, and Handling
QA	Quality Assurance
RFI	Request for Information
RPM	Revolutions Per Minute
SDC	Seismic Design Category
UL	Underwriters Laboratories
VFD	Variable Frequency Drive
WPS	Weld Procedure Specification

Units

cP = centipoise

in = inch

lbs = pounds

µin = micro inches (one one-millionth of an inch)

PPM = parts per million

Ra = roughness average, µin

rad = unit of absorbed radiation dose

RPM = revolutions per minute

SG = specific gravity

Definitions

BUYER – The company for whom the VENDOR is performing work or services

COMMERCIAL QUALITY ASSURANCE (CQA) – Level of controls for those items, services, or processes where, based on an evaluation of risk or nuclear safety, no additional quality controls beyond the provider's published or stated attributes of the item, service, or process is required.

DESIGN CHANGE – Within the context of this specification, a DESIGN CHANGE is technically equivalent to a SUBSTITUTION (see SUBSTITUTION). However, the term DESIGN CHANGE may be used to refer to more significant changes to the design compared to a simple substitution.

DEVIATION – Any departure from the requirements contained in the purchase order and specification which VENDOR proposes to incorporate if approved by BUYER.

ENHANCED QUALITY ASSURANCE (EQA) – Level of controls for those items, services, or processes where, based on an evaluation of risk or nuclear safety, additional controls beyond the provider's published or stated attributes of the item, service, or process are needed to verify critical attributes.

FULL QUALITY ASSURANCE (FQA) – Level of controls applied for items, services, or processes that are commensurate with the controls invoked under ASME NQA-1 or other appropriate national consensus standard.

HANDLING - The movement or transportation of items following receipt from offsite/ project locations. This includes movement within storage areas and movement/transportation from receipt or storage areas to field locations. Handling requirements include the need for special

handling tools and equipment, restrictions on material composition of surfaces in contact with the item, protection against damage or deterioration, which could occur during movement and placement, protection against physical damage due to excessive shock or vibration, and protection against entry of dirt, water, or other contaminants.

HOLD POINT – A mandatory inspection activity beyond which work shall not proceed until (1) the inspection is performed by an independent inspector and/or BUYER and acceptance is authenticated, or (2) a written release is authorized by the organization who established the hold point.

MANUFACTURER – The party responsible for making the product.

MORE CONSERVATIVE – "More conservative" shall be interpreted as "more protective of the health, safety and well-being of Site workers and facilities, the public, and environment, as applicable."

NONCONFORMANCE – A deficiency in characteristic, documentation, or procedure that renders the quality of an item or activity unacceptable or indeterminate.

PRESSURE-CONTAINING COMPONENTS – Items that form the pressure-containing envelope of the piping system.

PROCUREMENT QUALITY CLAUSES (QA CLAUSES) – Procurement quality clauses are to be used for the acquisition of items and services. The clauses establish contractual obligations for quality program systems, identification, traceability, documents submittals, testing, reporting, qualification, special process controls, inspections, etc.

PRODUCT DATA – Printed information including, but not limited to, catalog cuts, color charts, illustrations, diagrams, templates, performance curves, brochures, and other forms of Product literature.

QUALITY ASSURANCE RECORDS – Quality assurance plans, procedures, and records, including completed documents that furnish evidence of the quality of an item or activities affecting quality.

RATED LOAD – The maximum load that can be lifted by the device.

SHALL / MUST – Denotes project requirements, compliance is required.

SHIPPING – The movement of items from an off-site/project location (VENDOR, warehouse, etc.) to an on-site/project location, or movement from an on-site/project location to an off-site/project location. Shipping requirements include packaging and securing of items to protect against damage or deterioration which could occur during movement and transportation, protection against physical damage due to excessive shock or vibration, protection against entry of dirt, water, or other contaminants, and protection against other environmental conditions such as temperature or humidity.

SHOULD – Denotes recommendation or expectation, compliance is expected.

SPECIFICATION – Refers to any design, fabrication or supply specification.

STORAGE – Holding of items in areas that address: the probable maximum period to be held, the inherent physical limitations of the item itself, and required protection from potential hazards such as fire, corrosion, chemical attack and environmental conditions. Storage also includes the requirements for maintaining the integrity and operability of items through routine maintenance, cleaning, or other means of preservation.

SUBSTITUTION – Any change or deviation from issued approved drawings, designs, methods, or contract terms and conditions. Changes in products, materials, equipment, methods of construction, and test criteria required by the Contract Documents proposed by the VENDOR after award of the Contract are considered to be requests for substitution.

VENDOR – The company responsible for the supply of equipment or services.

WETTED – Within the context of this specification, "wetted" shall refer to any parts or surfaces designed to come in contact with waste process fluid or vapor during normal operations.

WITNESS POINT – An inspection activity beyond which work shall not proceed until an inspector and/or BUYER is notified and (1) the inspection is performed and released, or (2) the inspection is deferred and can be completed at a later time, or (3) a written waiver is issued by the organization who established the witness point.

1.0 PART 1 - GENERAL

1.1 Section Scope

This Specification provides requirements for the design, fabrication, examination, testing, packaging, shipping and lifting of Low Activity Waste Pretreatment System (LAWPS) in-tank process transfer pumps and mounting assemblies. Each in-tank transfer pump, also known as a "stick pump", will be installed onto a riser at the top of the appropriate tank and will have a vertical pump column that reaches down near the bottom of the tank.

1.1.1 Description of Equipment Supply

1.1.1.1 VENDOR shall provide in-tank transfer pumps as specified throughout this document.

Process transfer pump assemblies required (quantity 5 total, tag numbers listed below):

1. 202LP-CSA-ECS-P-200 (CS Tank), Quantity 1
2. 202LP-CSA-ECS-P-201 (CS Tank), Quantity 1
3. 202LP-LSA-LAG-P-301A (Lag Storage), Quantity 1
4. 202LP-LSA-LAG-P-302A (Lag Storage), Quantity 1
5. 202LP-LSA-LAG-P-303A (Lag Storage), Quantity 1

1.1.1.2 The following summary of major equipment applies to each process transfer pump assembly required:

A. Electric drive motor (tag numbers listed below)
   1. 202LP-CSA-ECS-PM-200 (CS Tank)
   2. 202LP-CSA-ECS-PM-201 (CS Tank)
   3. 202LP-LSA-LAG-PM-301A (Lag Storage)
   4. 202LP-LSA-LAG-PM-302A (Lag Storage)
   5. 202LP-LSA-LAG-PM-303A (Lag Storage)

B. Pump column
C. Pump mounting hardware including but not limited to pump mounting flange(s), pump mounting flange gasket(s), lifting bails, and any associated mounting fasteners.
D. Process pipe interfacing connections
E. Power and control cabling (internal) to flange/base plate mounted junction boxes
   NOTE: The power junction box shall be a separate junction box from the instrumentation junction box
F. Instrumentation
G. Variable Frequency Drive (VFD) system (tag numbers listed below)
   1. 202LP-CSA-ECS-VFD-200 (CS Tank)
   2. 202LP-CSA-ECS-VFD-201 (CS Tank)
   3. 202LP-LSA-LAG-VFD-301A (Lag Storage)

4. 202LP-LSA-LAG-VFD-302A (Lag Storage)
5. 202LP-LSA-LAG-VFD-303A (Lag Storage)

H. Pump lifting device(s) for use with hook on Weather Enclosure Crane per Section 1.6.2.3.J
I. Pump transport container
J. Any special tools and/or equipment required for shipping, handling, and installation
K. Spare parts/tools required for replacement of a vertical turbine pump motor in accordance with Section 2.4.4.5
NOTE: Complete spare pump assemblies including LAG-P-301B/302B/303B are not within the scope of this specification.

1.1.1.3 VENDOR shall perform the design, analysis, testing, inspection, and documentation work associated with the submittals described in Section 1.5.

1.1.2 Work By Others

1.1.2.1 Design and delivery of interconnecting power, control, and instrumentation cabling beyond the transfer pump junction boxes

1.1.2.2 Transfer pump support structure other than the pump base plate

1.1.2.3 On-site installation, operation, and on-site services

1.1.2.4 BUYER will provide Design Proposal Drawings (DPD's) defining pump configuration and mounting details for each pump assembly. The DPD's will include the following:

A. Design features (e.g., remote nut design that will interface with the remote impact wrench)
B. Important dimensions (e.g., tank riser diameter, height from top of riser to bottom of tank, etc.)
C. Important interface characteristics (e.g. riser attachment details, water, power, control, and instrumentation connection details, etc.)

Refer to BUYER-provided DPD's listed in Appendix B and included in the contract documents.

1.1.2.5 BUYER will provide pump data sheets which will include:

A. Number of pumps required
B. Required flowrate
C. Discharge head requirements
D. Horsepower requirements (nameplate and brake horsepower)
E. Required duty cycles
F. Net positive suction head (NPSH) limitations
G. Fluid characteristics (e.g., density, viscosity, % solids, etc.)
H. Maximum allowable working pressure
I. Other information (see data sheet for details)

Refer to BUYER-provided pump data sheets listed in Appendix B and included in the contract documents. However, the VENDOR is responsible for completing the BUYER-provided pump data sheets with missing information as specified in Section 1.5.4(D) and 1.5.5(L).

1.1.2.6 BUYER will provide VFD data sheets with requirements associated with each transfer pump. The data sheets are listed in Appendix B and are included in the contract documents. The VENDOR is responsible for completing BUYER provided data sheets as specified in section 1.5.4(D).

1.2 Related Sections

01 25 00	Substitutions and Design Changes
01 33 00	Submittals
01 40 00	Construction Quality Assurance Requirements
01 60 00	Labeling
01 66 00	Delivery Storage and Handling
01 81 01	General Service Natural Phenomena Hazard Performance Requirements
01 81 02	Safety Natural Phenomena Hazard Performance Requirements
01 86 23	I&C Requirements for Packaged Equipment
26 29 23	480V Variable Frequency Drives
40 05 00	Piping, Fittings and Flanges
40 05 00.11	Piping Materials Specification
40 05 05.11	Shop and Module Piping Fabrication and Installation
40 05 05.33	Pipe Welding
40 05 93	Common Motor Requirements for Process and Non-Process Equipment

NOTE: Should requirement conflicts arise between this equipment-specific specification document and the related sections listed above that apply generally to all LAWPS equipment, this specification document shall take precedence only when this specification's requirements are more stringent or conservative.

1.3 Codes and Standards

1.3.1 Work shall be performed in accordance with the referenced codes, standards, and documents for this specification.

1.3.2 The following codes and standards, of the exact issue shown, form a part of the BUYER basis of design to the extent specified in the applicable sections of this document. In the event of a conflict between documents referenced herein and the requirements of this specification, the

requirements of this specification shall take precedence only when this specification's requirements are more stringent or conservative. If a code or standard not listed below is to be applied to the scope (see Section 1.1), apply the latest code or standard as of April 16, 2015.

1.3.3 Government Documents

Code of Federal Regulations (CFR)

- 10 CFR 830, Nuclear Safety Management
- 10 CFR 830.120, Subpart A Quality Assurance Requirements
- 29 CFR 1910, Occupational Safety and Health Administration (OSHA)

U.S. Department of Energy (DOE) Procedures

- DOE Order 414.1D, Quality Assurance
- DOE/RL-92-36 Release 80, 2016, Hanford Site Hoisting and Rigging Manual

1.3.4 Non-Government Documents

American National Standards Institute/Hydraulic Institute (ANSI/HI)

- ANSI/HI 11.6, 2012, Rotodynamic Submersible Pumps for Hydraulic Performance, Hydrostatic Pressure, Mechanical, and Electrical Acceptance Tests
- ANSI/HI 14.6, 2011, Rotodynamic Pumps for Hydraulic Performance Acceptance Tests

American Petroleum Institute (API)

- API STD 610, 2011, Centrifugal Pumps for Petroleum, and Natural Gas Industry
- API STD 685, 2011, Sealless Centrifugal Pumps for Petroleum, Petrochemical and Gas Industry Process Services

American Society of Civil Engineers (ASCE)

- ASCE 04-98, Seismic Analysis of Safety-Related Nuclear Structures
- ASCE 07-10, Minimum Design Loads for Buildings and other Structures

American Society of Mechanical Engineers (ASME)

- ASME B&PV Code, 2013, Rules for Construction of Pressure Vessels (All Sections that apply including any listed below)
- ASME B&PV Code - Section IX, 2013, Welding, Brazing, and Fusing Qualifications
- ASME BTH-1, 2014, Design of Below-the-Hook Lifting Devices
- ASME B30.20, 2013, Below-the-Hook Lifting Devices
- ASME B30.26, 2010, Rigging Hardware
- ASME B31.3, 2012, Process Piping
- ASME B46.1, 2009, Surface Texture (Surface Roughness, Waviness, and Lay)
- ASME NQA-1-2008/2009A, Quality Assurance (QA) Requirements for Nuclear Facility Applications

American Society for Nondestructive Testing (ASNT)

- SNT-TC-1A, 2011, Recommended Practice for Personnel Qualification and Certification in Nondestructive Testing

American Welding Society (AWS)

- AWS D1.1/D1.1M, 2010, Structural Steel Welding Code - Steel
- AWS D1.6/D1.6M, 2007, Structural Welding Code – Stainless Steel
- AWS D14.1/D14.1M, 2005, Specification for Welding of Industrial and Mill Cranes and Other Material Handling Equipment
- AWS QC 1, 2007, Certification of Welding Inspectors Standard for AWS

Institute of Electrical and Electronics Engineers (IEEE)

- IEEE 43, 2013, Recommended Practice For Testing Insulation Resistance Of Rotating Machinery

National Electrical Manufacturers Association (NEMA)

- NEMA ICS 6, 1993 (R2001, R2006, R2011), Enclosures
- NEMA MG 1, 2014, Motors and Generators

National Fire Protection Association (NFPA)

- NFPA 70, 2014, National Electrical Code

1.3.5 Other Documents/Related Documents/Drawings

Hanford Procedures

- TFC-ENG-STD-13 (2015), Ignition Source Control Evaluation

1.4 System Descriptions

1.4.1 Refer to Section 1.1.1 for descriptions of equipment supply and references to design documentation that describes the equipment and associated systems.

1.4.2 Critical Dimensions

This section describes critical dimensions that apply to the pump assemblies. Critical dimensions are as follows.

1.4.2.1 Dimensions and tolerances associated with process fluid route above the tank riser interface including:

A. Piping and process fluid route geometry, including wall thickness, above the tank riser interface (including the pump mounting flange)

B. Discharge piping interface connection geometry
C. Any component geometry that provides a structural support function for any FQA components including mounting flange and relevant fasteners
D. For pump designs with shaft mechanical seals: The piping and process fluid route geometry associated with the line shaft sealing system including the primary sealing system, the secondary sealing system, and the primary sealing system leakage fluid route that is directed back into the tank.

1.4.2.2 All critical dimensions and tolerances shall be clearly identified as "critical dimension" on fabrication drawings (i.e. developmental and as-built drawing revisions).

1.4.2.3 All critical dimensions shall be individually verified and properly documented on dimensional inspection reports (see Section 2.5.2.1). For each critical dimension and tolerance required by drawings, the dimensional inspection reports shall individually identify the critical dimension and tolerance, record actual dimensions, and be initialed (or signed).

1.5 Submittals

1.5.1 Submittals that are listed within this section shall be prepared and processed in accordance with requirements of CSI Section 01 33 00 "Submittals" and shall include all of the required Quality Assurance documentation in accordance with CSI Section 01 40 00 "Construction Quality Assurance Requirements."

1.5.2 Refer to CSI Section 01 25 00 "Substitutions and Design Changes" for detailed substitution and design change requirements and Request for Information (RFI) forms/guidelines.

A. Any conflicts, discrepancies, or ambiguity between BUYER provided design documents shall be identified in writing by the VENDOR to the BUYER prior to work proceeding.
B. VENDOR shall inform the BUYER's Technical Representative before proceeding with any work if any information contained in the BUYER's drawings and specifications is missing, incorrect, or could adversely affect the operability or safety function of the equipment.

1.5.3 Preliminary Design Data (i.e., VENDOR technical proposal package)

A. Catalog or descriptive data
B. Preliminary pump curve
C. Preliminary outline drawing
D. Preliminary cross section drawing with Bill of Material
E. Motor data information (cut sheet and catalog/descriptive information)
F. Handling instructions for lifting from horizontal to vertical position and visa versa (vertical to horizontal position) using mounting plate lifting lugs and only one crane hook
G. List of Codes and Standards

1.5.4 Preliminary Design Package

The VENDOR shall prepare a Preliminary Design Package that documents the transfer pump design, calculations, material selection, and performance. The Preliminary Design Package shall address, at a minimum, the topics defined below. Comments received by the VENDOR shall be dispositioned to the satisfaction of the BUYER.

The following information shall be included in, but is not limited to, the Preliminary Design Package:

A. General VENDOR information, specifications, and Bill of Materials.
B. Drawings

The following drawings and details shall be included as part of the Preliminary Design Package. All drawings shall be formatted as specified in CSI Section 01 33 00 "Submittals."

1. Assembly drawings showing overall dimensional interfaces, major components, wetted part geometry, pump assembly weight, and pump assembly center of gravity
2. Bills of Material or parts list
3. Electrical power, control, and instrumentation interface drawings and wiring diagrams
4. Instrumentation and power terminal box location drawings
5. Interface connection types, sizes, and locations

C. Calculations

The VENDOR shall include calculations as part of the Preliminary Design Package. The calculations shall contain sufficient information to support the design and to verify requirements of this Specification are met. Calculations shall conform to VENDOR's NQA-1 pre-qualified QA program and calculation software shall be used in accordance with QA Clause B15 and B18. The following (as a minimum) shall be addressed:

1. Pump sizing calculations justifying pump selection.
2. Net Positive Suction Head Required ($NPSH_R$), horsepower, head, and pump efficiency versus capacity.
3. Performance curves shall be plotted for operating speeds at 100 rpm increments or less.
4. Performance corrections for viscosity and specific gravity.
5. Pump critical speed.
6. Individual assembly and total assembly weights.
7. Lifting attachment design including associated lifting and rigging equipment for lifting the Transfer Pump from both the horizontal and vertical positions.
8. Bearing selection analysis based on radial and axial thrust loads.
9. Maximum pump run time when deadheaded.

D. Data sheets

VENDOR shall fill in, correct, and complete BUYER provided pump or VFD data sheets identified in Appendix B with VENDOR information as appropriate. BUYER provided pump data sheet format includes motor data.

1.5.5 Final Design Review Package

The VENDOR shall prepare a Final Design Review Package that documents the transfer pump design, calculations, material selection, performance, and adequacy of the various loadings incurred during operation, handling, and delivery. The Final Design Review Package shall address, at a minimum, the topics defined below. Comments received by the VENDOR shall be dispositioned to the satisfaction of the BUYER.

The following information shall be included in, but is not limited to, the Final Design Review Package:

A. Updated general VENDOR information, specifications, and Bill of Materials.
B. Life expectancy analysis including

   1. Mean Time Between Failure (MTBF) analysis
   2. Analysis of radiation tolerance of non-metallic parts and resistance to degradation based on the environmental and operating conditions identified throughout this specification (see especially Sections 1.8, 2.4.7, and 2.4.7.5).
   3. Vibration intensity chart that estimates vibration levels charted over time
   4. Recommended a maximum vibration intensity at which time the BUYER should consider pump replacement

C. Nonmetallic component manufacturer's data of radiation resistance.
D. Projected motor data, speed/current curves, torque/speed curves, power factor/power output curves, torque/current curve, and current/output power and input power/output power curves.
E. Catalog/descriptive data on instruments and components in accordance with QA Clause B33.
F. VENDOR shall provide a list of instrumentation and recommended set points as appropriate, e.g., motor/pump vibration high and high-high alarm points.
G. All materials, components, and assemblies shall be identifiable and traceable in accordance with QA Clause B37.
H. Electrical components within the pump assembly shall be listed by a Nationally Recognized Testing Laboratory (NRTL) and labeled. Where a system or component is considered a custom design and is not listed by any NRTL, provide documentation of compliance with all applicable codes and standards as well as an evaluation of system safety per QA Clause B65.
I. Drawings

   The following drawings and details shall be included as part of the Final Design Review Package. All drawings shall be formatted as specified in CSI Section 01 33 00 "Submittals."

   1. All assembly and detailed shop fabrication drawings showing all interfaces, all components, pump assembly weight, and pump assembly center of gravity.
   2. Bills of Material or parts list
   3. Electrical power, control, and instrumentation interface drawings and wiring diagrams
   4. Instrumentation and power terminal box location drawings

5. Interface connection types, sizes, and locations
6. Extension spool drawing (as applicable)
7. Special tooling drawings
8. Lifting beam drawings

J. Calculations

The VENDOR shall include calculations as part of the Final Design Review Package. The calculations shall contain sufficient information to support the design and to verify requirements of this Specification are met. Calculations shall conform to VENDOR's NQA-1 pre-qualified QA program and calculation software shall be used in accordance with QA Clause B15 and B18. The following (as a minimum) shall be addressed:

1. Pump sizing calculations justifying pump selection.
2. $NPSH_R$, horsepower, head, and pump efficiency versus capacity.
3. Performance curves shall be plotted for operating speeds at 100 rpm increments or less.
4. Performance corrections for viscosity and specific gravity.
5. Pump critical speed.
6. Pump minimum depth of submergence required for pump startup and operation.
7. Individual assembly and total assembly weights.
8. Bearing selection analysis based on radial and axial thrust loads. Analysis shall include detailed L-10 bearing life calculations for motor and shaft bearings in accordance with American Bearing Manufacturer's Association standards and CSI Section 40 05 93 "Common Motor Requirements for Process and Non-Process Equipment" in sub-section 2.4.7 titled "Bearings."
9. Lifting attachment design including associated lifting and rigging equipment for lifting the Transfer Pump from both the horizontal and vertical positions.
10. ASME B31.3 calculations if required by code.
11. Thermal stresses.
12. Seismic design of Transfer Pump assembly: Structural analysis shall be in accordance with CSI Sections 01 81 01 "General Service Natural Phenomena Hazard Performance Requirements" and 01 81 02 "Safety Natural Phenomena Hazard Performance Requirements." Seismic Design Category (SDC) and limit state shall be as specified in Appendix A.
13. The VENDOR shall provide calculations identifying the maximum potential loads that may be applied to the BUYER's support structures due to static and dynamic forces generated by the VENDOR supplied equipment alone (i.e. provide worst-case scenario forces from VENDOR equipment not including outside forces such as seismic events e.g. end of service life conditions such as asymmetrical bearing wear that may cause severe off-balance pump vibration prior to failure). Identification of each applicable load case in accordance with the design code used shall be provided. Usage of Allowable Strength or Strength Design methods shall be clearly identified.
14. VENDOR shall provide maximum allowable forces and moments that may be applied to VENDOR equipment (from BUYER's interfacing equipment) at the pump discharge nozzle connection.

K. Lift and Rigging Plan in accordance with Section 1.6.2.3(I) of this specification.
L. Data sheets

VENDOR shall fill in, correct, and complete BUYER provided pump and VFD data sheets identified in Appendix B with VENDOR information as appropriate. BUYER provided pump data sheet format includes motor data.

1.5.6 Fabrication Process Review Package

The following procedures, plans and qualifications shall be approved by the BUYER prior to procedure use.

A. The VENDOR shall provide a detailed shop assembly plan, including sequence of assembly, of all major components and piping for review and approval by BUYER, in accordance with QA Clause B13.
B. Test and inspection plans/procedures including Factory Acceptance Test Procedures per requirements specified in Section 2.5.2 shall be submitted for BUYER review and approval in accordance with QA Clause B13.
C. Welding procedure schedule, specifications, procedure qualification records, and welder qualification records, including special instructions, shop travelers, etc. in accordance with QA Clause B28.
D. Weld visual inspection procedure and any NDE qualified procedures complete with HOLD points in accordance with QA Clause B31.
E. Visual/NDE certified weld inspector qualifications in accordance with QA Clause B25.
F. Repair procedure for rejected parts, base metal, and welds (Nonconformance Reports (NCRs) dispositioned as "accept" or "repair" shall be submitted prior to component final acceptance in accordance with QA Clause B22.
G. Weld rod storage and filler material control procedure.
H. Material control procedure demonstrating the process of identifying and maintaining traceability of items to meet the requirements of QA Clause B37.
I. Packaging, Storage, Shipping, and Handling (PSSH) Plan in accordance with Section 1.6.2 and QA Clause B85.
J. Painting, mixing, and surface preparation procedures in accordance with Section 2.4.6.2.

1.5.7 Final Data Package

Following completion of fabrication, assembly, and testing, the Final Design Review Package (described above in Section 1.5.5) shall be revised to include:

A. Signature Verification Sheet
B. Completed testing documentation with completed sign-off sheets including but not limited to:

    1. Factory Acceptance Test Reports (See Section 2.5.2.3) in accordance with QA Clause B52
    2. Lift Test Records with weight certifications in accordance with QA Clause B52
    3. Certificates of Calibration for VENDOR owned instruments and measurement equipment used during testing in accordance with QA Clause B12

C. Chemical and mechanical material test reports including but not limited to:

1. Certified Material Test Reports (CMTR's) in accordance with QA Clause B49
2. Positive Material Identification (PMI) documentation

D. Certificates of Conformance

1. Nonmetal component Certificates of Conformance
2. VENDOR's Certificate of Conformance in accordance with QA Clause B79

E. Inspection/examination documentation including but not limited to:

1. Receiving Inspection Reports in accordance with QA Clause B52
2. Weld Inspection Reports in accordance with QA Clause B52
3. Nondestructive Inspection Reports in accordance with QA Clause B52
4. Liquid Penetrant Material Certification in accordance with QA Clause B46
5. Dimension Verification Reports with critical dimensions verified in accordance with QA Clause B52
6. Fastener tightening records in accordance with QA Clause B52
7. Impeller balancing data in accordance with QA Clause B52
8. Electrical inspection and test reports including records verifying acceptable completion of electrical insulation tests, continuity tests, grounding tests, and product testing (if required) in accordance with QA Clause B52
9. Harmonic distortion level report, if relevant, in accordance with QA Clause B52
10. Final Inspection Report in accordance with QA Clause B52
11. Non Conformance Reports (closed)
12. Commercial Grade Dedication (CGD) Reports: For Safety (FQA) items, the VENDOR shall meet the requirements of the BUYER's CGD plan
13. Certificates of Calibration for instruments furnished with pump assemblies in accordance with QA Clause B61
14. Certification against the procurement of potentially suspect or counterfeit items (i.e., all supplied materials shall be genuine, new, and unused), in accordance with QA Clause B76.
15. Identification of age control items for nonmetallic components, in accordance with QA Clause B43.
16. Certification of the controlled use of graded fasteners in accordance with QA Clause B73.

F. Fabrication Documentation

1. Fabrication Travelers
2. Weld Maps

G. Updated VENDOR design data including but not limited to:

1. As-built drawings with critical dimensions identified
2. Updated calculations
3. Updated performance curves and associated data based on test results (See Section 2.5.2.3.3)

4. Approved Design Change Notices (DCN's)
5. Requests for Information (pertinent to the fabricated assembly)
6. Recommended spare parts/tools list in accordance with QA Clause B82

H. Installation, start-up, operation, maintenance, removal, and disassembly instructions: The VENDOR shall provide Operation and Maintenance Manual(s) for record documentation that shall also include step-by-step installation, start-up, operation, maintenance, removal, and disassembly instructions. The manual(s) shall contain, as a minimum:

1. Installation instructions for installing the pump onto the appropriate LAWPS tank riser
2. First-time start-up instructions
3. Removal instructions for removing the pump from the appropriate LAWPS tank riser
4. Full shop assembly/disassembly instructions with illustrations down to the individual component level (assembly/disassembly activities may be required at any time after delivery to the BUYER at the BUYER's discretion or during removal and decontamination procedures)
5. Operation instructions
6. Preventative maintenance requirements for operation and storage: Preventative maintenance instructions shall include provisions for two types of long-term storage:

   a. In a "dry" uninstalled horizontal position
   b. Installed in a tank riser typically with the pump submersed in tank waste

7. If these items are not included elsewhere in the Final Design Review Package, the Operation and Maintenance Manual(s) shall include, or provide as a separate volume, the following items:

   a. Instrumentation instructions
   b. Alarm set points
   c. Allowable operating regions
   d. Updated pump data sheets (including motor data)
   e. Component manufacturer data sheets or cut sheets
   f. Component manufacturer operation & maintenance manuals
   g. Component manufacturer specifications
   h. Component manufacturer drawings/diagrams
   i. Calibration charts
   j. Motor nameplate data
   k. Connection diagrams

1.5.7.1 All Final Data Package submittals must be submitted and approved by BUYER prior to shipment of equipment.

1.6 Delivery, Storage & Handling

1.6.1 Refer to CSI Section 01 66 00 "Delivery Storage and Handling" for delivery storage and handling related general requirements and submittal descriptions. Specific delivery storage and handling related requirements are described in this document.

1.6.2 Packaging, Storage, Shipping, and Handling (PSSH) Plan

VENDOR shall submit a Packaging, Storage, Shipping, and Handling (PSSH) Plan in accordance with CSI Section 01 66 00 "Delivery Storage and Handling." In addition to the general requirements identified in the aforementioned related section, special requirements for the In-Tank Transfer Pump PSSH plan are listed as follows.

1.6.2.1 Cleaning

PSSH plan shall have cleaning procedures that include the following steps at a minimum:

A. VENDOR shall meet all cleaning requirements contained in CSI Section 01 66 00 "Delivery Storage and Handling."
B. VENDOR shall meet all piping cleaning requirements contained in CSI Section 40 05 05.11 "Shop and Module Piping Fabrication and Installation."
C. After Non-Destructive Examination (NDE) is complete and before connecting system into existing systems, clean internal surfaces mechanically or by water flushing.
D. Furnish equipment required to perform flushing and testing.
E. Mechanical Cleaning: Remove loose dirt, scale, and debris by brushing, wiping, water jetting, or other mechanical method approved by the BUYER until there is no visible dirt, scale, or debris.
F. Water flushing:
    1. Flush piping with water for 2 minutes minimum, and until effluent is clean and contains no visible particulate matter. Flushing pressure shall not exceed maximum operating pressure specified in applicable pipe design codes. Flushing water supply shall have sufficient capacity to produce a flow velocity of 4 to 6 ft/s in largest pipe size, with pipe full.
    2. Remove all water and temporarily cover the nozzles with plastic chloride free caps or temporary flanges.
    3. Any water flushing by VENDOR during fabrication or testing shall be conducted with inhibited water that meets the requirements of Section 2.2.2.

G. Provide documented evidence that flushing or mechanical cleaning has been accomplished as specified in this section.

1.6.2.2 Packaging

A. VENDOR shall meet all packaging requirements contained in CSI Section 01 66 00 "Delivery Storage and Handling."
D. All flanged openings, which are not provided with a permanent flange cover, shall be protected by a polyethylene blind flange and a full faced rubber gasket with a minimum thickness of 1/8 inch.
E. The pump shall be covered in a heat shrink style wrap or plastic, supported against tearing, and braced for vibration. Heads shall be packaged similarly.
F. All pipe stubs shall be covered with a yellow chloride free plastic pipe cap.

G. For internal parts, permanent supports are preferred to avoid damage during shipment. If temporary internal bracing is required, it shall be painted red and a temporary label, located near the nameplate, shall state that the skid contains temporary bracing that must be removed.
H. Where temporary bracing is welded in place, remove by grinding and perform NDE in accordance with fabrication NDE requirements.
I. Small parts that are to be shipped loose shall be bagged or boxed and marked with the purchase order number of the equipment.
J. For stainless fabrication items used for sealing, packaging, and tagging shall meet the chloride content limitations as defined by BUYER.
K. Prior to packaging, items must be cleaned per cleaning procedures outlined in the PSSH.
L. The transfer pump assembly including but not limited to the pump, pump column, motor, and mounting assembly shall be packaged and shipped completely assembled.
M. Pump Transport Container
    1. A single re-useable pump transport container shall be provided by the VENDOR for each pump assembly.
    2. The pump transport container shall enable the pump, with containment bag in place, to be remotely placed in the pump transport container using only one crane.
    3. If necessary, any part of the pump transport container may be bolted to concrete when used during laydown at the VENDOR's discretion (this option will be available at the LAWPS site in the designated staging area). However, if this option is needed, the VENDOR shall clearly identify this need on VENDOR supplied drawings as an equipment interface point with the BUYER's facility.
    4. The pump transport container shall be free of sharp edges or corners that are capable of cutting the pump containment bag.
    5. The pump transport container shall enable the pump to be placed in the container without the need to raise the pump more than 1 foot above the ground (e.g., this could be accomplished if the end of the container is removable).
    6. The pump transport container shall include a pump laydown device or feature (that is either separate or integrated with the container) to enable the pump to be safely rotated from vertical to horizontal, using only one crane by remote control, without damage to the pump during demonstration (See Section 2.5.2.3.9.D). For example, the pump transport container could have a pivoting device (or a feature to pivot the pump upon) that is integrated with the pump transport container.
    7. The pump transport container shall meet all the requirements of packaging, storage, shipping, and handling specified throughout Section 1.6 and CSI Section 01 66 00 "Delivery Storage and Handling."

1.6.2.3 Handling

A. VENDOR shall meet all handling requirements contained in CSI Section 01 66 00 "Delivery Storage and Handling."
B. All lifting attachments shall be self-centering. When hoisted, the pump assembly shall hang vertically in the normally installed orientation.
C. The lifting points shall be designed to permit lifting the pump assembly without distortion and damage or misalignment to the components of the assembly.
D. Transfer pump shall have provisions for crane insertion into tank risers using only one crane hook.
E. Transfer Pump design shall accommodate removal of Transfer Pump from the tank after it has completed its service life.
F. Below-the-hook lifting devices: Devices such as lifting bails and beams shall be fabricated in accordance with ASME B30.20, ASME BTH-1, and AWS D14.1.
G. Lifting Bails, Eyes, and Devices: The VENDOR shall provide the necessary lifting devices to lift the Transfer Pump assembly. Transfer pumps shall have permanently installed lifting bails in accordance with Appendix C. The suspended assembly shall hang to within 2 in. of true vertical end-to-end. This capability shall be demonstrated at the VENDOR's facility. All lifting equipment supplied by the VENDOR shall meet applicable portions of the Hanford Site Hoisting and Rigging Manual, DOE-RL-92-36; refer to CSI Section 01 66 00 "Delivery Storage and Handling" for detail relating to these lifting requirements.
H. VENDOR shall perform an analysis of any lifting devices. Analysis shall confirm that the completed pump assembly can support its own weight when lifted from horizontal to vertical or when laid down from vertical to horizontal (without the use of any temporary reinforcements such as "strong backs").
I. Analysis, calculations, and a Lift and Rigging Plan (refer to CSI Section 01 66 00 "Delivery Storage and Handling" for Lift and Rigging Plan) shall be submitted for the BUYER's approval. The design of the lifting equipment shall be in accordance with ASME B30.20 and BTH-1. The minimum design factor for swivel hoist rings shall be no less than 5 based on ultimate strength, in accordance with ASME B30.26. The design weight for analysis of the lifting attachments (e.g., lifting lugs) and/or attachment points (e.g., threaded bolt holes) shall be the estimated/calculated weight times the Dynamic Load Factor of 1.25. The design load of the lifting device shall be permanently marked or stamped on the device. The design load shall be defined as the maximum load intended to be lifted by the beam, i.e., the rated load.
J. The Pump Transport Container (that contains the complete Transfer Pump assembly and lifting device or devices) shall be capable of a 2-point horizontal lift using a single crane for offloading from and loading onto a transport vehicle.[1]

---

[1] Some pump assembly lengths are so long that, when hung vertically during a single point lift, the bottom of the pump assembly cannot be raised more than one foot off the floor (which would not be high enough to load onto the bed of a transport vehicle). Therefore, a 2-point lift is used for horizontal offloading and loading from the transport vehicle and a single-point lift is used for vertical installation and removal from the appropriate installation site.

Once off-loaded from the transport vehicle, the Transfer Pump assembly and VENDOR-provided lifting device(s) shall be designed to permit lifting the Transfer Pump assembly from the horizontal to the vertical using a single-point lift and only one crane, without distortion or damage to the components of the pump assembly, pump column, or lifting devices. The center of gravity of the Transfer Pump assembly shall be identified in the analysis and on the drawings.

K. It shall be demonstrated, documented, and witnessed by BUYER Technical Representative (BTR) and/or BUYER Quality Representative (BQR) (e.g., during acceptance testing at VENDOR's facilities or a different documented event) that the transfer pump assembly can be inserted into and removed from a tank riser flange without interference with the riser. Refer to Section 2.5.2.3.9 for test details.

1.7 Quality Assurance

1.7.1 VENDOR Quality Assurance Program

A. The VENDOR shall implement and maintain an approved Quality Assurance (QA) Program and procedures in accordance with the applicable elements of NQA-1-2008/2009A.

B. Refer to CSI Section 01 40 00 "Construction Quality Assurance Requirements" for additional quality assurance related requirements. Applicable QA Clauses are summarized in the table below. The full QA Clause definition and associated requirements are located in CSI Section 01 40 00 "Construction Quality Assurance Requirements."

Table 1-1. Procurement Quality Clauses

SUPPLIER FABRICATION
B12 Supplier Use of Calibrated Equipment
B13 Fabrication/Inspection/Test Plan
B15 Supplier Use of Commercial off the Shelf Software
B18 Supplier Use of Spreadsheet Calculations Using Commercial off the Shelf Software
B22 Nonconformance Documentation and Reporting
B25 Certified Weld Inspector (CWI)
B28 Welding Procedures and Qualifications
B31 Nondestructive Examination Process
MATERIAL IDENTIFICATION
B33 Identification of Items with Catalog Cut

B37 Identification and Traceability of Items
B43 Identification of Age Control Items
TESTING AND TEST DATA
B46 Liquid Penetrant Material Certification
B49 Certified Material Test Report
B52 Inspection and Test Report
B61 Certification of Calibration
B65 Nationally Recognized Testing Laboratory (NRTL) Listed or Labeled
INSPECTION AND ACCEPTANCE CRITERIA
B73 Control of Graded Fasteners
B76 Procurement of Potentially Suspect or Counterfeit Items
B79 Certificate of Conformance
B82 Recommended Spare Parts Listing
MATERIAL HANDLING
B85 Packaging/Shipping Procedures

1.7.2 Quality Level Requirements

A. The definition of quality levels for LAWPS design and fabrication is provided below:

1. **Full Quality Assurance (FQA):** Level of controls applied for items services, or processes that are commensurate with the controls invoked under ASME NQA-1 or other appropriate national consensus standard.
2. **Enhanced Quality Assurance (EQA):** Levels of controls for those items, services, or processes where, based on an evaluation of risk or nuclear safety, additional controls beyond the providers published or stated attributes of the item, service, or process are needed to verify critical attributes.
3. **Commercial Quality Assurance (CQA):** Level of controls for those items, services, or processes where, based on an evaluation of risk or nuclear safety, no additional quality controls beyond the providers published or stated attributes of the item, service, or process is required.

B. Quality levels for individual components and assemblies are defined on BUYER provided drawings. Refer to Section 1.1.2.4 for details.

C. Quality levels, bases, and quality level based requirements are summarized in Appendix A.

1.7.3 Hold Points

A. The following verification points required by this section shall be in accordance with CSI Section 01 40 00 "Construction Quality Assurance Requirements" verified by the BUYER, as applicable. At a minimum, the following witness and hold points shall apply:

Table 1-2. Hold and Witness Point Verification.

Verification Point Description	Type of Verification
Prior to Initiating Fabrication	H
Prior to Initial Production Welding (First Weld*)	H
Prior to Inspections	H, W
Prior to Fabrication Acceptance Testing	H, W
Prior to Shipment	H
LEGEND: (H) Hold (W) Witness	

B. The VENDOR shall provide required notifications of verification points in accordance with CSI Section 01 40 00 "Construction Quality Assurance Requirements" as applicable, and shall not proceed past required hold points without written authorization from the BUYER QA representative.

1.8 Site Conditions

1.8.1 Refer to CSI Section 01 66 00 "Delivery Storage and Handling" for storage condition related requirements.

1.8.2 The pumps will be installed onto tank risers. The tank risers are located in shielded, ventilated, temperature controlled concrete vaults and are not subject to outdoor environmental conditions during operations. During delivery, all equipment may be exposed to the outdoor conditions specified below.

1.8.3 Indoor Vault Conditions (Above the tank riser interface):

Temperature range: 68°F to 120°F

Relative humidity: 0 to 100%

1.8.4 Outdoor Environmental Conditions (Hanford, Washington):

Temperature range: -25°F to 115°F (direct sunlight)[2]

[2] Source (for BUYER reference only): DBD 3.1.2

Relative humidity: 0 to 100%

1.8.5 Tank Internal Conditions (Below the tank riser interface)

Refer to the pump data sheet for tank internal environment and conditions. Refer to Section 2.4.7.5 for radiation related requirements.

1.8.6 Additional Site Conditions

Additional site conditions can be found in CSI Sections 01 81 01 "General Service Natural Phenomena Hazard Performance Requirements" and 01 81 02 "Safety Natural Phenomena Hazard Performance Requirements."

2.0 PART 2 - PRODUCTS

2.1 Manufacturers

Subcontracting to other manufacturers shall be in accordance with contract documents.

2.2 Materials

2.2.1 General Material Requirements

2.2.1.1 Unless otherwise specified, all materials and all material components and parts, associated with manufactured equipment, including items permanently installed into systems, subsystems, and/or assemblies, shall be new and unused.

2.2.1.2 Piping shall be seamless.

2.2.1.3 Use of hard surface overlay products shall be reviewed with the BUYER to ensure compatibility with the tank waste. Specifically, any product that uses a cobalt binder shall be avoided.

2.2.1.4 Certified Material Test Reports
Materials used for wetted parts (i.e., parts designed to come in contact with process fluid during normal operations), rotating members (e.g., motor, impeller, and impeller shaft), bearings, and any components that provide a structural support function for those components (including motor body, fasteners and all weld filler materials) shall conform to ASTM or ASME. Such materials (excluding the copper rotor bars and connection rings) shall be provided with CMTR's.

2.2.1.5 Positive Material Identification
PMI will be required for all alloy material wetted parts above tank riser interface and any components that provide a structural support function for those components (incl. fasteners and all weld filler materials). PMI will be performed as close to the actual final installation as practical to assure the correct alloy materials are installed where intended. Refer to CSI Section 40 05 05.11 "Shop and Module Piping Fabrication and Installation" for detailed PMI technical and documentation requirements, particularly Section 3.2.11 titled "PMI."

2.2.1.6 Certificate of Compliance
For all other materials not specified elsewhere in this specification, a Certificate of Compliance (CoC) shall be provided.

2.2.1.7 Material Safety Data Sheet
VENDOR shall submit Material Safety Data Sheets for elastomers, surface coatings, and lubricants for any and all such materials being provided.

2.2.2 Material Handling Requirements

2.2.2.1 All materials (including adhesives) contacting austenitic stainless steel and nickel alloy surfaces shall not be compounded from, or treated with chemical compounds containing elements in such quantities that harmful concentrations are leachable, or that they could be released by breakdown under expected environmental conditions and could contribute to intergranular cracking or stress corrosion cracking, such as those containing fluorides, halogens, chlorides, sulfur, lead, zinc, copper, and mercury.

2.2.2.2 Any compounds, liquids, or markers that come into contact with stainless steel surfaces shall not contain more than 200 ppm of halides or 50 ppm of chlorides.

2.2.2.3 VENDOR shall implement controls to ensure that there are no cross contamination effects from other metals to stainless steel, by ensuring separate storage areas and separating fabrication equipment. Controls shall be in place to ensure tools that could leave residual carbon steel deposits on the stainless steel are not used (such as, use of carbon steel wire brushes on stainless steel).

2.2.3 Functional Material Requirements

2.2.3.1 Dissimilar grades of stainless shall be used for any applications where stainless steel will be in contact and slide together. For example, a Nitronic 60 bolt would work with a base metal of 304.

2.2.3.2 Materials of construction shall be selected to withstand the transfer pump's mission (see Section 2.4.4.1) and installed environment (see Sections 1.8 and 2.4.7). Motor insulation materials shall be selected for use in high radiation environments in accordance with Section 2.4.7.5.

2.2.4 Specific Material Requirements

2.2.4.1 Unless specified elsewhere in this specification, material used for wetted parts (see Definitions) shall be stainless steel or other BUYER-approved material. Grade 316/316L is preferred.

2.2.4.2 For all materials that are not wetted parts, stainless steel is preferred (preferably Grade 316/316L).

2.2.4.3 The transfer pump flange and mounting assembly shall be stainless steel.

2.2.4.4 Radiation shield material if defined on DPD's shall be 300 series stainless steel.

2.2.4.5 Aluminum, brass, bronze, and copper base materials, if used, shall not come into contact with the waste fluid.

2.2.4.6 Although non-metallic materials should be avoided throughout the pump assembly design to extend the life expectancy of the pump assembly, if other non-metallic materials are required where the material will come into contact with process fluid, non-metallic materials such as elastomers and thermoplastics may be allowed with BUYER approval. Chemical and physical properties of elastomers shall be suitable

for the chemical and radiation environment in which they are used (see Sections 1.8 and 2.4.7) and meet the design life (see Section 2.4.4.1).

2.3 Equipment

NOT USED

2.4 Components

2.4.1 General Requirements

2.4.1.1 VENDOR will provide design, fabrication, lifting, and examination of transfer pump base plate in accordance with interface details described in BUYER provided DPD's included in the contract documents.

2.4.1.2 All piping shall be designed and fabricated in accordance with ASME B31.3.

2.4.1.3 Any special equipment or tools necessary to operate, install, start-up, or maintain the pumps shall be included with the procurement. Instructions and diagrams shall be included with the special equipment describing how to use it/them.

2.4.1.4 Transfer pump design shall be vertical bottom-suction submersible sealless centrifugal or vertical turbine pump capable of continuous or intermittent operation as defined on the BUYER-provided DPD's and pump data sheets included in the contract documents.

2.4.1.5 The transfer pump assembly and its interfaces are shown on BUYER provided DPD's included in the contract documents.

2.4.1.6 The design of the Transfer Pump shall be designed in accordance with API 610 (for traditional sealing centrifugal pumps including vertical turbine pump designs) or API 685 (for sealless centrifugal pumps including sealless canned motor submersible pumps designs) as applicable to the design except as modified and supplemented by this Specification.

2.4.2 Component Specific Requirements

2.4.2.1 Pump Mounting Flange Gasket
Pump shall have a Linebacker™ mounting flange gasket with an EPDM seal. Gasket shall be permanently secured to bottom of pump flange.

2.4.2.2 Line Shaft Sealing System
For pump designs with shaft mechanical seals, a line shaft sealing system shall be designed to preclude leakage into the pit. Any process leakage that passes the primary sealing system shall be directed back into the tank (i.e., leakage cannot pressurize the void space between the primary and secondary sealing systems). A secondary sealing system shall be provided to protect against external leakage in the event of primary sealing system wear or failure. A physical barrier (e.g., line shaft

slinger) shall prevent a primary seal failure from directly spraying against the secondary sealing system.

2.4.2.3 Vibration Monitors

The Transfer Pump assembly shall be monitored for vibration to monitor the condition of the pump for replacement planning purposes. VENDOR shall also identify vibration levels that exceed design limitations and may cause damage to VENDOR or BUYER equipment. Two vibration transmitters, one for the X-axis and one for the Y-axis (the Z-axis being vertical), shall be located on the pump mounting flange. Instrumentation shall, for each channel, provide an analog current signal (4 to 20 mA) proportional to average peak vibration, and operate from 24 V DC loop power. The VENDOR shall provide the signal leads to a VENDOR-provided terminal box.

2.4.2.4 Casing

The pump/motor casing, including pump column and all associated piping, shall be self-draining.

2.4.2.5 Pump Bearings

A. Submersible pump bearings shall be tank process liquid lubricated, hydrodynamic bearings.
B. Process lubricated bearings shall be abrasion-resistant. Bearing selection and spacing shall be the responsibility of the VENDOR.
C. Motor cooling and bearing lubrication liquid shall be discharged from the pump without causing an aerosol spray in the tank vapor space.
D. Process lubricated bearings shall be designed to tolerate dry start-up.
E. Bearing design shall be in accordance with CSI Section 40 05 93 "Common Motor Requirements for Process and Non-Process Equipment" in sub-section 2.4.7 titled "Bearings."

2.4.2.6 Impeller

A. The use of semi-open impellers is considered self-draining.
B. The impeller clearance shall be pre-set and shall not require adjustment after final assembly.
C. The pump shall tolerate reverse rotation encountered during drain back and flushing or shall be provided with an anti-reverse rotation device.
D. The impeller shall be keyed or splined to the pump shaft to prevent inadvertent loosening in the event of reverse rotation and to prevent axial movement in either direction.
E. The impeller shall be dynamically balanced in accordance with API 610 or API 685.

2.4.2.7 Pump Suction

A. The pump shall include a suction intake screen.

B. The dimension between the bottom of tank and bottom of the pump suction screen shall be in accordance with BUYER-provided DPD's listed in Appendix B and included in the contract documents.
C. The suction shall have an intake strainer with restrictive openings to prevent entry of objects that could damage or plug any of the Transfer Pump internal direct-fluid passages.
D. Perforations shall be included on the bottom as well as the sides of the screen.
E. The screen hole pattern shall maximize open surface area to the extent practical.
F. The pump shall be capable of passing any solid materials that can enter the pump intake via the screen.
G. The screen openings shall be sized accordingly by the VENDOR.

2.4.3 Interface Requirements

2.4.3.1 The Transfer Pump will be installed vertically into a new radioactive waste storage tank. The Transfer Pump will be lifted and rotated from the horizontal orientation to the vertical for installation and the reverse process for removal. The largest tanks are special ASME Section VIII vessels with special pump risers ending in a shielded pump pit for mounting the pump.

2.4.3.2 Transfer Pump components below the tank riser interface must fit through the tank riser.

2.4.3.3 During Transfer Pump removal, the Transfer Pump assembly will be lifted into a maintenance bag assembly that will allow the Transfer Pump to be sealed inside the bag. The maintenance bag assembly will be provided by the BUYER for on-site use only. Transfer Pump components that could interface with the bag shall have no sharp edges that present a potential to penetrate the bag.

2.4.3.4 Maximum Transfer Pump assembled and installed "wet" weight (i.e., the load placed on the tank riser) of the Transfer Pump assembly shall not exceed 10,000 lb without BUYER approval.

2.4.4 Functional Requirements

2.4.4.1 DESIGN LIFE: Transfer pumps shall be designed to last a minimum of 10 operating years[3] and 10,000 hours continuously operating after exposure to nuclear waste process fluid and the environment operating conditions described by this specification. This is based primarily on environment operating conditions impacting material selection for the pump bearings and seals.

---

[3] The LAWPS facility design life is 40 years. Due to the particularly difficult tasks for which the transfer pumps are responsible and the past service life statistics for Hanford vertical transfer pumps, it is considered unrealistic to expect (and unreasonable to require) the pumps to last the 40-year facility design life. However, a 40-year design life is desired and a 40-year service life should be possible so any design features that promote a longer design life are desired.

2.4.4.2 The minimum depth of submergence required for pump startup and operation shall be 11 inches or less without introduction of flush water or back flushing prior to startup. Minimum depth of submergence required for pump startup and operation shall be defined on VENDOR data sheets as measured from the bottom of the pump suction screen.

2.4.4.3 There may be extended periods when the installed pumps will not be operated throughout the Transfer Pump's life. The VENDOR shall indicate the duration and frequency of recommended pump "bumping," flushing, and/or other recommended remotely operated maintenance during these idle periods to ensure that the pump is operational for as long as reasonably possible. The duration and frequency of maintenance activities shall be documented in the Final Design Review Package and the Operation and Maintenance manual(s).

2.4.4.4 Transfer Pump design shall be configured to minimize maintenance required during operation or extended lay-up periods. All required maintenance shall be designed to be performed remotely (e.g., control signal based maintenance such as motor bumping and flushing). Transfer pumps shall be designed to require no routine "hands-on" maintenance requiring access to the pump.

2.4.4.5 Spare parts: Sealless canned motor submersible pumps shall not have any spare parts; upon failure, these pumps will be replaced as a single assembled module. Vertical turbine pumps shall be designed to enable replacement of the pump motor if the motor fails. VENDOR shall provide a list of all spare parts and tools needed for replacement of the vertical turbine pump motor. Vertical turbine pump motor replacement procedure shall be described in detail in the VENDOR provided operation/maintenance manual (see Section 1.5.7.H).

2.4.4.6 Self-draining: Pump design in general shall be self-draining into the tank (without damage to the pump) and shall eliminate hold up (i.e., fluid retention) of tank waste and wash solutions. Submersible motors shall be designed to prevent the ingress of waste into areas of the pump/motor that are not capable of being drained or flushed. Waste shall not be capable of reaching the motor windings.

2.4.4.7 The pump design shall not require external lubrication sources.

2.4.4.8 Vertical turbine pump designs should simplify removal and packaging of contaminated pumps, and facilitate disposal in 8 foot or smaller lengths (for standard burial boxes).

2.4.4.9 For sealless canned motor submersible pump assemblies only, the casing and structure shall be welded construction throughout where possible.

2.4.4.10 Risk of damage

2.4.4.11 The pump shall be designed to avoid motor/pump damage or damage to interface equipment such as the tank riser and associated tank. Requirements to mitigate such damage or any other pump failure risks, such as minimum operating speed and minimum tank liquid level required shall be defined by the VENDOR.

2.4.4.12 Water Flush Features

A. Consideration shall be given to the minimization of contamination traps.
B. VENDOR shall notify the BUYER of any special flushing requirements. Flushing strategies must reach all parts of the pumping system that contain waste.
C. The pump shall be capable of being internally flushed through the discharge (i.e., backflushed) without causing damage to the pump.
D. Any water flushing by VENDOR during fabrication or testing shall be conducted with inhibited water that meets the requirements of Section 2.2.2.

2.4.5 Surface Requirements

2.4.5.1 Surface Decontamination Requirements: Transfer Pump components exposed to the waste tank fluid shall be designed to eliminate the collection or entrapment of fluid or sludge. All cavities shall be self-draining. Blind holes shall be plugged or machined through for drainage. Wash-down will be accomplished during Transfer Pump removal.

2.4.5.2 Surfaces exposed to the waste fluid shall be free of pits, scratches, gouges, and sharp weld ripples that could entrap solids. Based on the location and quantity, scratches or gouges greater than 0.020 inch deep shall be repaired by one of the following.

A. Mechanically repair to the adjacent surface contour to eliminate areas that could potentially hold and/or trap contamination.
B. Weld repair (if required) using an appropriately qualified procedure and welder, and mechanically finish to the adjacent contour. Associated non-destructive examination shall be in accordance with either the base material specification or the applicable welding code.

2.4.5.3 Exposed surface finishes of any components that are exposed to the tank waste (including piping, plate, bar, welds, and any wetted components) shall not exceed 32μin (Ra) in accordance with ASME B46.1.

2.4.5.4 Castings:

A. Castings shall be free of cracks, tears, or other linear defects.
B. The external surface shall not exceed 125 μ in. (Ra) in accordance with ASME B46.1).
C. Any discontinuity exceeding 0.06 inch deep after surface finishing shall be excavated and repaired by welding.
D. Any discontinuity exceeding 1/16 inch size, but not exceeding 0.06 inch deep after surface finishing shall be blended smooth into existing contour at no steeper than 13 degrees slope.
E. Randomly dispersed discontinuities of 1/64 inch or less shall be considered non-relevant and shall not be considered in the overall count. Areas deemed "spongy" are not acceptable and shall be removed by blending (to a depth not exceeding 0.05 inch) or repaired by welding.

F. Relevant discontinuities shall be randomly dispersed with a minimum spacing of ¼ inch. However, these discontinuities may be removed via blending if the depth does not exceed 0.05 inch.
G. As-cast surfaces in limited access regions of the hydraulic casing shall be removed, but are not subject to these requirements.
H. Conditions not addressed by these criteria shall be documented with proposed disposition and submitted to the VENDOR for approval prior to any rework.

2.4.6 Protective Coatings

2.4.6.1 Stainless steel materials are not to be painted or coated in any way unless noted otherwise on drawings.

2.4.6.2 Non-stainless steel alloy components fabricated by VENDOR shall be provided with a baked or two-part epoxy coating. VENDOR shall submit painting, mixing, and surface preparation procedures.

2.4.7 Process Requirements

2.4.7.1 Pump Data sheets
BUYER will provide pump data sheets as described in Section 1.1.2.5 and listed in Appendix B. These data sheets include liquid characteristics, particle sizes, pressures, and temperatures among other process related details.

2.4.7.2 NPSH
Operation of the Transfer Pump will require that it is capable of performing at a wide range of tank levels and waste temperatures, and thus a wide range of Net Positive Suction Head Available ($NPSH_A$). The pump design shall minimize $NPSH_R$ and submergence requirements. The performance requirements are defined in the pump data sheets. It is recognized that it will be necessary to reduce the Transfer Pump speed as the tank level approaches the minimum.

2.4.7.3 Operating Speed
The Transfer Pump shall be capable of operating at a range of 30% to 100% of rated speed. Speeds unsuitable for continuous operation shall be identified.

2.4.7.4 Corrosion and Erosion
Allowances for corrosion and erosion shall be provided for pump components in contact with the process fluid. Refer to the BUYER-provided pump data sheets included in the contract documents for process fluid characteristics.

2.4.7.5 Radiation
Pumps shall be designed to endure radiation from nuclear waste. In addition to the design life requirements specified in Section 2.4.4.1, the lifetime integrated dose (i.e.,

40 years[4] of worst case exposure) that shall be used for design of all pump components within the scope of supply shall be $1x10^8$ rad.

2.4.8 Structural Requirements

2.4.8.1 Seismic Analysis

2.4.8.2 The Transfer Pump assembly shall be designed to meet the seismic requirements in CSI Sections 01 81 01 "General Service Natural Phenomena Hazard Performance Requirements" and 01 81 02 "Safety Natural Phenomena Hazard Performance Requirements."

2.4.8.3 It is not a design requirement for the Transfer Pump to be operational following a seismic event; however, it is a design requirement for the Transfer Pump assembly to be removable from the waste tank following a seismic event.

2.4.8.4 Load Combinations
The Transfer Pump and associated piping shall be designed to withstand loads due to piping thermal growth, seismic event and seismic sloshing per ASCE 04 for SDC-3 components and ASCE 07 for SDC-1/SDC-2 components (refer to Appendix A for SDC classification).

2.4.8.5 Lifting Loads
The Transfer Pump shall be designed to allow for the lifting requirements identified in Section 1.6.2.3.

2.4.9 Electrical Requirements

2.4.9.1 Refer to CSI Section 01 86 23 "I&C Requirements for Packaged Equipment" for instrumentation and controls (I&C) design requirements applicable to this equipment.

2.4.9.2 Electrical design shall be in accordance with the NFPA 70, National Electrical Code.

2.4.9.3 Electrical equipment enclosures shall meet National Electric Manufacturer's Association (NEMA) Industrial Control and Systems (NEMA ICS 6) requirements.

2.4.9.4 All electric motors associated with the vertical turbine pumps shall be labeled in accordance with NEMA MG-1 or listed by an Occupational Safety and Health Administration (OSHA) approved Nationally Recognized Testing Laboratory (NRTL).

2.4.9.5 Variable Frequency Drive (VFD) Systems: The Transfer Pump shall be controlled by VENDOR supplied VFD systems meeting the requirements listed in CSI Section 26 29 23 "480V Variable Frequency Drives" and the attached VFD data sheets listed in Appendix B.

---

[4] Contrary to Section 2.4.4.1, pumps shall be designed for 40-years of radiation to improve the odds of reaching a 40-year service life.

2.4.9.6 The VENDOR shall provide motor power and instrument terminal boxes for vertical turbine pumps in accordance with CSI Section 40 05 93 "Common Motor Requirements for Process and Non-Process Equipment."

2.4.9.7 All electrical equipment (exclusive of sealless canned submersible pump motors) shall be listed, or labeled, by a NRTL such as Underwriters Laboratories (UL) Equipment. Equipment without a listing mark by a NRTL is not approved for use in the design, unless a NRTL category for that type of equipment does not exist. If a category for that equipment does not exist, the equipment may be approved for use only if accepted by the BUYER's Authority Having Jurisdiction.

2.4.9.8 For sealless canned motor submersible pumps: VENDOR shall supply a NEMA 4X enclosure located/supported above the tank riser interface. The pump wiring and cabling shall be terminated on terminal blocks within this enclosure. The BUYER's cables shall enter through the top of this enclosure. The power distribution terminal blocks inside of the enclosure are the BUYER's interface point. The enclosure shall not interfere with handling of the Transfer Pump during installation and removal. Wires shall be clearly labeled at the motor power and instrument terminal boxes.

2.4.9.9 Transfer pump components exposed to the waste fluid shall meet the requirements of TFC-ENG-STD-13 for Ignition Source Control Set 1.

2.4.9.10 Motor Design

2.4.9.10.1 Refer to CSI Section 40 05 93 "Common Motor Requirements for Process and Non-Process Equipment" for common motor design requirements applicable to vertical turbine pumps only (i.e., does not apply to sealless submersible canned motors).

2.4.9.10.2 The motor shall be designed and rated for inverter duty and meet the applicable requirements of NEMA MG 1, Part 31.

2.4.9.10.3 Sealless canned submersible pump motors shall be tank process fluid product cooled and lubricated.

2.4.9.10.4 The sealless submersible pump canned electric motor shall be a squirrel cage induction type motor with both rotor and stator assemblies hermetically sealed in welded cans.

2.4.9.10.5 Miscellaneous motor requirements:

A. Horsepower: Responsibility of the VENDOR
B. Motor RPM: Responsibility of the VENDOR
C. Voltage: 460V, 3-phase (60 hertz)
D. Enclosure: Totally enclosed, fan-cooled
NOTE: This requirement does not apply to sealless submersible canned motors.
E. Insulation: Min Class F – Class H or N preferred
F. Winding insulation voltage: 1600 V peak minimum
G. Windings - inverter rated for variable frequency drive application
H. Service Factor: 1.15
I. Duty Cycle: Continuous

2.4.9.10.6 Motor Winding Temperature: Sealless canned transfer pump motor windings shall be monitored for temperature during testing at the VENDOR's facility. VENDOR shall supply the Transfer Pump drive motor with internal, 3-wire, 100 ohm platinum resistance temperature detectors, or iron/Constantine American National Standards Institute (ANSI) type "J" thermocouples, for the purpose of obtaining the maximum winding insulation surface temperature during Transfer Pump testing.

2.4.9.10.7 Motor overheating protection for vertical turbine pumps: If at any time the motor temperature rises to levels that are capable of causing damage to any part of the pump or interfacing components, the motor shall be designed to automatically shut-off at a VENDOR designated temperature to prevent damage to any part of the pump or interfacing components.

2.4.9.10.8 Motor overheating protection for sealless canned motor submersible pumps: If at any time the motor surface temperature (i.e., the temperature of components in contact with process fluid) rises to 170 degrees F or more, the motor shall be designed to automatically shut-off to prevent overheating.

2.4.9.10.9 Motor horsepower shall be non-overloading when operating at any point on the pump curve given the worst case fluid parameters identified in BUYER-provided data sheets included in the contract documents.

2.4.10 Labeling Requirements

2.4.10.1 In addition to the requirements of this section, labeling shall be in accordance with CSI Section 01 60 00 "Labeling."

2.4.10.2 Lifting equipment supplied by the VENDOR shall be marked with a 300 series stainless steel tag securely attached with stainless steel wire or seal welded. The following information shall be permanently marked on the tag: Manufacturer's name, rated load, beam weight (if over 100 lbs), specification number and revision, test load, and load test date (month/year).

2.4.10.3 The manufacturer's nameplate should be stamped with the following information:

A. VENDOR's size and model number
B. Pump serial number
C. Capacity
D. Pumping head
E. Speed
F. Maximum allowable working pressure
G. Temperature, basis for maximum allowable working pressure
H. Motor horsepower (i.e., nameplate horsepower)

2.5 Fabrication

2.5.1 General Fabrication Requirements

2.5.1.1 The edges of metal components shall be rounded so that no sharp edges or burrs are present except where sharp edges are appropriate for pump internal design (e.g., impeller) purposes; should this exception be exercised, sharp edges shall be identified on VENDOR provided drawings.

2.5.1.2 Unless otherwise specified elsewhere within this specification, all fabrication, welding, and installation activities for any items (including but not limited to piping) shall be controlled, performed, and documented in accordance with related sections 40 05 05.11 "Shop and Module Piping Fabrication and Installation", 40 05 00.11 "Piping Material Specification", 40 05 00 "Piping, Fittings and Flanges", and 40 05 05.33 "Pipe Welding."

2.5.1.3 The waste transfer system (piping, valves, instruments, etc.) shall be welded construction in accordance with CSI Section 40 05 05.33 "Pipe Welding."

2.5.1.4 Welding of structural components shall be performed in accordance with AWS D1.1 for carbon steel or D1.6 for stainless steel.

2.5.1.5 Welded piping connections shall be butt-welded.

2.5.1.6 For all wetted (see Definitions) pressure retaining components: Welds shall be full penetration. Fillet welds may be used in lieu of full penetration welds with BUYER approval in accordance with CSI Section 01 25 00 "Substitutions and Design Changes".

2.5.2 Inspection and Test Requirements

2.5.2.1 Inspection and Test Plan
VENDOR shall provide an Inspection and Test Plan which shall include the shop traveler summaries, dimensional inspection procedure, and dimensional/final inspection report formats. Where applicable, the fabrication/heat treating sequence and methodology shall be addressed.

2.5.2.2 Fabrication Examination

2.5.2.2.1 Weld Examination

A. All welding and associated examination shall be performed in accordance with API 610 for vertical turbine pumps and API 685 for sealless canned motor submersible pumps.
B. Unless otherwise specified elsewhere, radiography is the preferred method of NDE and shall be specified where possible. Where it is considered impractical to perform radiographic examination due to joint configuration, VENDOR may perform ultrasonic examinations with BUYER approval.
C. For all wetted (see Definitions) pressure retaining components and any structural components that support wetted pressure retaining components (including the

pump column assembly: Welds shall be visually inspected and 100% tested by radiography or ultrasonic examination in accordance with API 610 for vertical turbine pumps and API 685 for sealless canned motor submersible pumps. If fillet welds are approved by BUYER per Section 2.5.1.6, magnetic particle examination or liquid penetrant examination may be used to examine fillet welds in accordance with API 610 for vertical turbine pumps and API 685 for sealless canned motor submersible pumps.

D. Nondestructive test/examinations, including visual examinations and Dimensional Inspection Reports with critical dimensions verified, shall be recorded and included with the Final Data Report.

2.5.2.2.2 Surface finish visual inspection shall be performed to document compliance with Section 2.4.5.3.

2.5.2.2.3 Dimensional Inspection Procedure

The VENDOR shall develop, submit for BUYER review, and implement a procedure to dimensionally inspect all critical dimensions (i.e. dimensional inspections shall be within specified dimensional tolerances) as outlined on all drawings referenced in Appendix A "List of Supporting Documents." The procedure shall identify the type of measuring devices to be used and the method and frequency with which they will be calibrated. The VENDOR shall dimensionally inspect each item prior to final assembly of the components. Dimensional inspection documentation shall be included in the required document package.

2.5.2.2.4 Final Inspection Report

The VENDOR shall prepare a final inspection report for each item which documents the results of the final inspection. This inspection shall include and confirm as a minimum the following:

A. All inspection documentation is complete with all inspection signatures.
B. All critical dimensions and associated tolerances on design documents are achieved.
C. Overall visual inspection to cover any damage to vulnerable equipment items to include but not limited to instruments, electrical or instrument cable, small bore piping, and seals, etc.
D. Equipment orientation/configuration is correct.
E. Confirmation that all structural and equipment bolt tightening has been completed to the appropriate torque specifications.
F. Surface finish matches design documents.
G. Labeling to include correct item identification and marking.
H. Any specific fabrication requirements defined on data sheets or associated fabrication specifications have been accounted for in the final fabrication.
I. All VENDOR issued as-built drawing data matches the final fabrication.

2.5.2.3 Factory Acceptance Testing

2.5.2.3.1 Factory Acceptance Test Procedures

A. Factory Acceptance Test (FAT) procedures describing the method, setup, layout, pressure boundaries, test equipment, and instrumentation and measurement tools required for the tests specified herein shall be prepared by the VENDOR and submitted to the BUYER. The BUYER reserves the right to witness testing.
B. The VENDOR shall notify the BUYER in advance of any formal testing in accordance with contract documents. The tests described in the following sections shall be performed and documented by the VENDOR.
C. Calibrated measurement and test equipment (M&TE) shall be used. VENDOR shall submit M&TE procedures with the FAT procedures. Certificates of Calibration shall be maintained for M&TE. Calibration records shall be made available upon request of the BUYER. M&TE shall be calibrated in accordance with nationally recognized calibration standards traceable to the National Institute of Standards and Technology or other nationally recognized standards.
D. The results of testing shall be documented either in individual reports or as a single report organized by test type. Final FAT reports shall be provided for approval and included as a part of the Final Data Package.
E. All defects in materials, components, or workmanship detected as a result of testing shall be repaired or replaced by the VENDOR at no additional cost to BUYER.

2.5.2.3.2 Hydrostatic Testing

A. Waste process pressure retaining components above the tank riser interface including the pump mounting flange and discharge piping up to the interfacing connection shall be pressure tested to ensure leak tightness in accordance with ASME B31.3, paragraph 345. If hydrostatically tested, the test pressure shall be at least 1.5 times the specified design pressure. If pneumatically tested, the test pressure shall be 110% of the specified design pressure.

   ACCEPTANCE CRITERIA: There shall be no visible leakage at or above the pump interface with the tank riser throughout any pressure tests.

B. Waste process pressure retaining components below the tank riser interface (e.g., for vertical turbine pumps, this includes pump shaft seals) including any pump column section connections shall be hydrostatically tested for strength only in accordance with either ASME B31.3 paragraph 345, ANSI/HI 11.6 Section 11.6.6 for submersible (i.e., close-coupled) pumps, or ANSI/HI 14.6 Appendix B for vertical turbine pumps.

   ACCEPTANCE CRITERIA: This portion of testing is for strength only. Pump must not be physically damaged and shall be fully operable after all hydrostatic testing activities are complete. Any weepage from these joints (below the tank riser interface back into the source tank) is allowable. If ANSI/HI 11.6 or ANSI/HI 14.6 is used, the acceptance grade used shall be Grade 1B per ANSI/HI 11.6

Table 11.6.5.4 and ANSI/HI 14.6 Table 14.6.3.4.

2.5.2.3.3 Hydraulic Performance Testing

A. Performance testing as described in this section shall be performed twice: one test set before the run-in test (described in Section 2.5.2.3.10) and one test set after the run-in test. All data, calculations, and records required in this section shall be provided for both test sets. The intention of the second test set is to prove that the pump run-in has not degraded the performance of the pump and help validate the quality and reliability of the pump.
ACCEPTANCE CRITERIA: Acceptance criteria used for both test sets (before and after run-in test) shall be Acceptance Grade 1B per ANSI/HI 11.6 Table 11.6.5.4 and ANSI/HI 14.6 Table 14.6.3.4.

B. Each pump shall be tested for hydraulic performance in accordance with ANSI/HI 11.6 Section 11.6.5 for submersible (i.e., close-coupled) pumps and ANSI/HI 14.6 Appendix E for vertical turbine pumps.

C. The performance test shall obtain sufficient data, including rated performance point and run-out, to plot a full performance curve at the rated speed. The following shall be recorded and/or calculated during or after the test:
    1. Flow rate
    2. Total head
    3. $NPSH_R$
    4. Brake horsepower (bhp)
    5. Electrical power input
    6. Pump efficiency
    7. Actual speed (rpm)
    8. Motor amperage and voltage (one each phase)
    9. Pump vibration
    10. Impeller type and size
    11. Number of stages
    12. Impeller setting (if applicable)
    13. Submergence depth at the beginning and end of each test (NOTE: This depth should be held constant during each test)
    14. Vibration data throughout all performance testing

D. The pump shall be tested over a range of operating speeds in 10% increments, from the minimum allowable speed to 100% of pump rated speed. However, no less than 8 speed increments shall be tested.

E. Pump motor assemblies controlled by a variable frequency drive shall be tested to identify speeds suitable for continuous operation (critical speeds) of the assembly up to a minimum of 110% of the rated speed of the pump.

F. After completion of testing and sufficient data has been collected, the VENDOR shall prepare a certified correct pump curve reflecting pump performance at the discharge nozzle with water. Information shall include:
    1. Impeller type and size
    2. Number of stages

3. Head vs flow
4. bhp @ maximum specific gravity
5. Pump efficiency
6. $NPSH_R$
7. High- and low-end allowable operating regions
8. Any limitations of operation

G. Performance curves shall be plotted for operating speeds at 100 rpm increments or less.

H. A detailed drawing of the test set-up shall be included with the test documentation identifying pipe length, fitting location and size, instrument location, elevations, test tank dimensions, liquid level, and pump position.

2.5.2.3.4 Pump Sealing System Leak Check

For pumps with shaft seals only, the pump shall be operated at a low flow condition (lowest flow recommended by the VENDOR without causing damage to the pump assembly) at rated speed for a minimum of 5 minutes, or with approval by the BUYER, a duration recommended by the VENDOR. The pump sealing systems (see Section 2.4.2.2) shall be inspected for leakage above the tank riser interface during the sealing system leak check.

ACCEPTANCE CRITERIA: Leakage from the primary sealing system is acceptable only if the leakage is directed back to the tank. Leakage from the primary sealing system that does not directly return to the tank by design is unacceptable. Any leakage from the secondary sealing system is unacceptable.

2.5.2.3.5 Tank Pump-Out Test

With the fully assembled transfer pump operating at its rated performance point, the water in the test pit shall be continuously lowered until the transfer pump breaks suction. The water temperature, test pit liquid level, and the elevation above the bottom of the pump where loss of suction occurs shall be recorded.

ACCEPTANCE CRITERIA: Pump shall be proven capable of meeting the rated pump-out height specified by VENDOR. Rated pump-out height is subject to review and approval by BUYER.

2.5.2.3.6 Pump Minimum Submergence Startup Test

With the fully assembled transfer pump intake located at the rated minimum submergence depth, the pump shall be started to verify that the pump will startup and meet the performance requirements identified on BUYER-provided pump data sheets listed in Appendix B.

ACCEPTANCE CRITERIA: Pump shall startup and operate at or below the rated minimum submergence depth, without damage, and continue to operate for a period of at least 1 minute without any disruption to pump discharge flow.

2.5.2.3.7 Motor Overheating Protection Test

Motors shall be designed to automatically shut off prior to overheating in accordance with Sections 2.4.9.10.7 and 2.4.9.10.8. The temperature of the motor shall be brought to the designated overheating temperature to confirm that the pump will automatically shut off.

ACCEPTANCE CRITERIA: Pump must shut off at or below the designated overheating temperature. For sealless canned motor submersible pumps, this temperature is 170 degrees F. For vertical turbine pumps, this temperature is designated by the VENDOR.

2.5.2.3.8 Pump Motor Megger Test

A pump motor megger test shall be conducted in accordance with ANSI/IEEE Standard 43, IEEE Recommended Practice For Testing Insulation Resistance Of Rotating Machinery. The megger test shall be conducted between each phase and the ground at 500 V direct current. Continuity between the phases shall be recorded. All megger and continuity test results shall be documented and submitted for information.

ACCEPTANCE CRITERIA: Acceptable values are greater than or equal to the values stated in IEEE Standard 43.

2.5.2.3.9 Lift Tests

A. Load Test
Pump lifting points and any lifting equipment provided by the VENDOR shall be load tested by the VENDOR to 125% of the rated load. After load testing, visually examine lift equipment for deformation, cracks, or other defects. Document inspections and tests. The VENDOR shall document the load test results including test setup description, actual weight, rated load weight, and test weight.

ACCEPTANCE CRITERIA: Test must be completed without damage to any transfer pump components within the scope of supply.

B. Vertical Orientation Lift Test
The VENDOR shall demonstrate lifting the transfer pump from horizontal to vertical orientation using a crane. The VENDOR shall prove vertical orientation of the Transfer Pump via direct measurement lift of the full assembly or through a combination of shop measurements and extrapolation via measurements made to the outside of the assembly when held vertically by a crane. The complete transfer pump assembly shall hang true vertical end to end. During the lift test, the deflection of the pump shall be monitored to evaluate if pump damage occurs, or is likely to occur, when lifted in accordance with the VENDOR's lift procedure. The VENDOR shall document the test results. Counterweights, if required to achieve vertical straightness, may be used with BUYER approval. Submit the design and extent of counterweights, if required.

ACCEPTANCE CRITERIA: Test must be completed without damage to any transfer pump components within the scope of supply. The complete transfer pump assembly shall be proven to hang true vertical end to end when measured at the suction inlet.

C. Insertion Lift Test
The VENDOR shall demonstrate the transfer pump assembly can be remotely inserted using a crane into a tank riser and completely onto the riser flange without interference with the riser inside diameter and without any hands-on guidance at the tank riser (due to radiation exposure concerns at the tank riser). The mock-up of the tank riser shall consist of a 10 foot long section of 12-inch Schedule 40 pipe using any stainless steel.

ACCEPTANCE CRITERIA: Test must be completed without damage to any transfer pump components within the scope of supply.

D. Removal Lift and Laydown Test
After completion of the Insertion Lift Test described above, the VENDOR shall demonstrate the transfer pump assembly can be removed from a tank riser, rotated to the horizontal position, and placed in the pump transport container using only one crane. The pump transport container shall be demonstrated to meet the requirements specified in Section 1.6.2.2.M. Any plastic wrap may be used to simulate the containment bag.

ACCEPTANCE CRITERIA: Test must be completed without damage to any transfer pump components within the scope of supply.

2.5.2.3.10 Run-In Test

A. Transfer pumps shall be subjected to run-in tests of at least 96 hours continuous duration at the VENDOR's facility prior to shipment to the BUYER distributed as follows:
    1. Run-in Test #1: 24 hours continuous duration at maximum pump capacity
    2. Run-in Test #2: 24 hours continuous duration at minimum pump capacity
    3. Run-in Test #3: 48 hours continuous duration at nominal pump capacity

B. Installation of the pump to the test setup must be witnessed by the BTR to confirm that no undocumented steps, outside or standard installation procedure, are necessary.

C. The start and end of each run-in test period must be witnessed by BTR and/or BQR but the remainder of this time does not require direct witnessing if the entire period of time is recorded on video and the video footage is inspected and approved by the BTR and/or BQR. The video shall include some form of visual indication that the pump is operating (e.g., show fluid discharge, pump control monitors shown in the foreground, etc.).

D. Vibration data shall be recorded throughout all run-in tests.
E. ACCEPTANCE CRITERIA: Pump shall continue to operate without failure or hands-on maintenance of any kind continuously for each run-in test period. In the event of an error, fault, or interruption of some kind, the error must be corrected and the full run-in test period must be restarted from the beginning.

2.5.2.3.11 Hold Points

Refer to Section 1.7.3 for hold points.

2.6 Shop Quality Control

2.6.1 Qualification of Welding Personnel

2.6.1.1 Personnel who perform welding shall have been qualified in accordance with CSI Sections 40 05 05.11 "Shop and Module Piping Fabrication and Installation" and 40 05 05.33 "Pipe Welding."

2.6.1.2 Personnel qualified to perform welding of below-the-hook lifting devices (e.g., lifting lugs, bails, or spreader beam) shall have been qualified in accordance with AWS D14.1 prior to welding.

2.6.1.3 Personnel welding stainless steel structural-related components shall have been qualified in accordance with AWS D1.6.

2.6.1.4 Personnel welding carbon steel structural components shall have been qualified in accordance with AWS D1.1. As an alternate for AWS D1.1, AWS D14.1, and AWS D1.6 qualifications of welding personnel may be qualified in accordance with ASME B&PVC Section IX.

2.6.1.5 Welder Qualification Records: VENDOR shall maintain a copy of welder performance qualification test results, renewal of qualification documentation, and continuity logs at the jobsite.

2.6.2 Qualification/Demonstration of Welding Procedures

2.6.2.1 Welding Procedure Specifications and Procedure Qualification Records

2.6.2.2 Welding Procedure Specifications (WPS) and Procedure Qualification Records (PQR) for any welding of any items (including but not limited to piping) shall be provided in accordance with CSI Sections 40 05 05.11 "Shop and Module Piping Fabrication and Installation" and 40 05 05.33 "Pipe Welding."

2.6.2.3 Material control procedures, liquid penetrant material certifications, and supporting demonstration records, as applicable, shall be provided for all items (including but not limited to piping) in accordance with related sections 40 05 05.11 "Shop and Module Piping Fabrication and Installation", 40 05 00.11 "Piping Material Specification", and 40 05 05.33 "Pipe Welding."

2.6.3 Nondestructive Examination Process Requirements

2.6.3.1 Refer to Section 2.5.2.2 for equipment specific applicability of Nondestructive Examination (NDE).

2.6.3.2 All NDE of any items (including but not limited to piping) shall be performed and documented in accordance with related sections 40 05 05.11 "Shop and Module Piping Fabrication and Installation", 40 05 00.11 "Piping Material Specification", and 40 05 05.33 "Pipe Welding."

2.6.3.3 VENDOR shall maintain a file containing personnel certifications and NDE performance procedures as applicable at the fabrication site for BUYER's evaluation.

2.6.3.4 Examinations shall be performed, and appropriate documentation prepared by Certified Welding Inspectors (CWI) who have received certification in accordance with AWS QC-1 Certification of Welding Inspectors Standard. Certified Associate Welding Inspectors (CAWI), certified in accordance with above standard, may perform examinations when under immediate direction of CWIs. As an alternate for personnel certification for visual weld examination, certification may be in accordance with VENDOR's standard practice, provided that such practices are approved by the BUYER.

2.6.3.5 Personnel performing NDE shall be certified in accordance with VENDOR's written practice, which shall meet requirements of ASNT SNT-TC-1A. VENDOR shall use Level II or III personnel to interpret final inspection or test results.

2.6.3.6 VENDOR shall provide NDE testing material certification reports.

2.6.3.7 NDE performance procedures shall include PMI procedures in accordance with CSI Section 40 05 05.11 "Shop and Module Piping Fabrication and Installation."

3.0 PART 3 - EXECUTION

NOT USED

3.1 Preparation (Not Used)

3.2 Erection, Installation & Application (Not Used)

3.3 Field Quality Control (Not Used)

3.4 Adjusting And Cleaning (Not Used)

3.5 Demonstration (Not Used)

3.6 Protection (Not Used)

4.0 LIST OF APPENDICES

4.1 Appendix A – Quality Level Summary Table for In-Tank Transfer Pumps

4.2 Appendix B – Supporting Document(s) Issued With This Specification

4.3 Appendix C – Hanford Tank Farm Pump Lifting Bail Design

Appendix A – Quality Level Summary Table for In-Tank Transfer Pumps

(Applies to pumps 202LP-CSA-ECS-P-200/201, 202LP-LSA-LAG-P-301A/B, -302A/B, -303A/B)

Quality Level	Basis	Components	Design Code or Special Quality Level Based Minimum Requirements	NPH / Limit State / SIL Rating
FQA	RPP-RPT-58553, Fine Spray Leak (Provide confinement of waste by providing a leak tight boundary between pressurized piping and equipment and the environment)	• Any primary containment pressure retaining components above the pump mounting flange including mounting flange seal, shaft seals (if applicable), and pump discharge piping	• Design codes: ASME B31.3 / API 610 / API 685 • Hydrostatic test per ASME B31.3 as described in Section 2.5.2.3.2.A • Pump Sealing System Leak Check per Section 2.5.2.3.4 • CMTRs per Section 2.2.1.4 • PMI per Section 2.2.1.5 • Critical dimension identification and inspection per Section 1.4.2 • 100% radiograph or ultrasonic NDE for wetted pressure retaining components per Section 2.5.2.2.1	SDC-3 / Limit State D / SIL Rating Not Applicable
		• Any structural components (incl. fasteners and all weld filler materials) supporting any FQA components	• Design codes: API 610 / API 685 • CMTRs per Section 2.2.1.4 • PMI per Section 2.2.1.5 • Critical dimension identification and inspection per Section 1.4.2 • 100% radiograph or ultrasonic NDE for structural components per Section 2.5.2.2.1	SDC-3 / Limit State C / SIL Rating Not Applicable
EQA	Mission critical based on OR model analysis (31269-22-RPT-0001)	• Any primary containment pressure-retaining components below the pump mounting flange including the pump column • Motor • Impeller • Shaft • Bearings • Any structural components (incl. fasteners) supporting any EQA components if not already identified as FQA	• Design codes: ASME B31.3 / API 610 / API 685 • Hydrostatic test (for strength only) per ASME B31.3, ANSI/HI 11.6, or ANSI/HI 14.6 as described in Section 2.5.2.3.2.B • CMTR's per Section 2.2.1.4 • Run-in test per Section 2.5.2.3.10 • Performance tests per Section 2.5.2.3.3 • Motor megger test per Section 2.5.2.3.8 • Motor overheating prevention test per Section 2.5.2.3.7 • 100% radiograph or ultrasonic NDE for wetted pressure retaining components per Section 2.5.2.2.1	SDC-2 / Limit State C / SIL Rating Not Applicable

CQA	Not FQA or EQA	• All other components not identified as FQA or EQA
		  o Lifting bail assembly
		  o Vibration sensor(s)
		  o Inlet screen
			• Design codes: ASME B31.3 / API 610 / API 685
			• CoC's per Section 2.2.1.6
			• Load tests for lifting bail assembly per Section 2.5.2.3.9
				SDC-1 / Limit State A / SIL Rating Not Applicable

NOTE: This table is a summary of equipment quality level definitions and is intended to supplement the quality levels defined on BUYER provided DPD's (refer to Section 1.1.2.4).

Appendix B – Supporting Document(s) Issued With This Specification

A. BUYER PROVIDED DATA SHEETS

1. PUMP DATA SHEETS

   a. 202LP-CSA-ECS-P-200 (CS Tank Transfer Pump)
   b. 202LP-CSA-ECS-P-201 (CS Tank Transfer Pump)
   c. 202LP-LSA-LAG-P-301A/B (Lag Storage Pump)
   d. 202LP-LSA-LAG-P-302A/B (Lag Storage Pump)
   e. 202LP-LSA-LAG-P-303A/B (Lag Storage Pump)

2. VFD DATA SHEETS

   a. 202LP-CSA-ECS-VFD-200
   b. 202LP-CSA-ECS-VFD-201
   c. 202LP-LSA-LAG-VFD-301A/B
   d. 202LP-LSA-LAG-VFD-302A/B
   e. 202LP-LSA-LAG-VFD-303A/B

B. BUYER PROVIDED DESIGN PROPOSAL DRAWINGS

1. H-16-001601 LAWPS Assembly DPD Lag Storage Pump
2. H-16-001413 LAWPS Assembly DPD CS Pump Pit A/B ECS-P-200/201

C. ALL SPECIFICATIONS LISTED IN SECTION 1.2 "RELATED SECTIONS"

Appendix C – Hanford Tank Farm Pump Lifting Bail Design

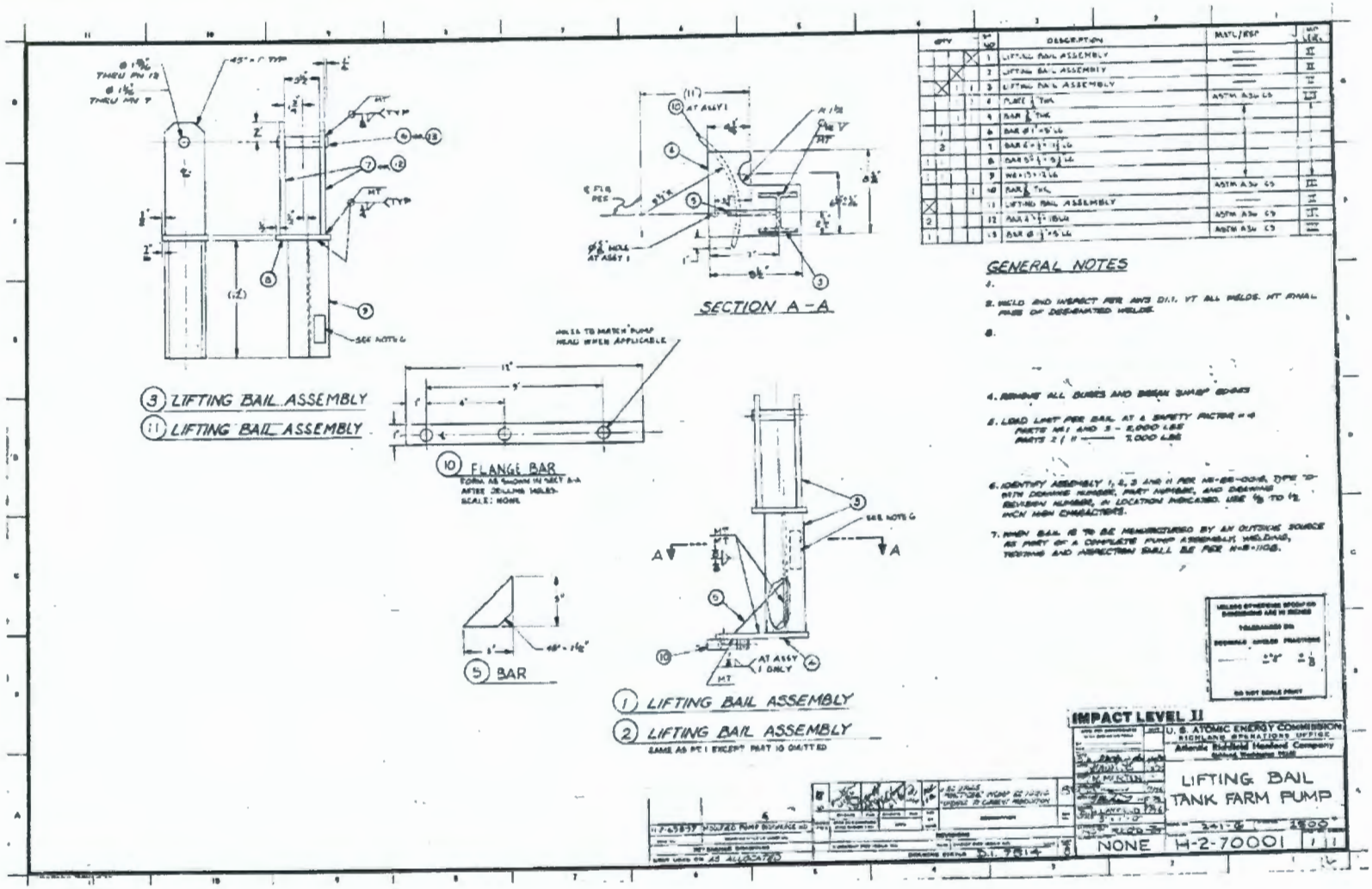

SPECIFICATION

15-2-020

LAWPS TANK AGITATOR SPECIFICATION

AECOM ATKINS AREVA

LOW ACTIVITY WASTE PRETREATMENT SYSTEM

Project No. 31269 (T5L01)

Document No. 15-2-020

CSI Section 43 22 16

Safety Related ☐ Non-Safety Related ☒

LAWPS Tank Agitator Specification
202LP-LSA-LAG-MIX-301
202LP-LSA-LAG-MIX-302
202LP-LSA-LAG-MIX-303

LARRY E. ULBRICHT
STATE OF WASHINGTON
27921
REGISTERED
PROFESSIONAL ENGINEER

5/16/17

FOR PERMITTING JEU 5/16/17

Prepared for

Washington River Protection Solutions, LLC

Revision: 0 Status: Final

AECOM ATKINS AREVA

Project Number: 31269 (T5L01)
Doc. No.: 15-2-020
Date: May 16, 2017
Revision: 0

REVISION PAGE

Project Name:	LAWPS	**Discipline:**	Mechanical
Client:	Washington River Protection Solutions	**Project Number:**	31269 (T5L01)
		Latest Revision:	0

REVISION SIGNATURES

L. Ulbricht Larry Ulbricht Digitally signed by Larry Ulbricht Date: 2017.05.15 11:52:16 -07'00'		D. Skeath David Skeath Date: 2017.05.15 12:09:34 -07'00'	
Prepared by	**Date**	**Approved by (SDE/Lead)**	**Date**
S. Baker Sam Baker	Digitally signed by Sam Baker Date: 2017.05.15 11:56:22 -07'00'	P. Bell Paul Bell	Digitally signed by Paul Bell Date: 2017.05.16 07:20:34 -06'00'
Checked by	**Date**	**Approved by (QA)** For DP	**Date**
N/A	N/A	D. Priebe Michael Schultze	Digitally signed by Michael Schultze Date: 2017.05.16 09:43:51 -06'00'
Verified by (if required)	**Date**	**Approved by (PEM)**	**Date**

Status	Rev. No.	Date	Prepared By	Pages	Description of Changes
Final	0	5-16-17	L. Ulbricht	26	Approved for Bid

Safety Related: Yes ☐ No ☒	**Quality Level:** Full QA ☐ Enhanced QA ☒ Commercial QA ☐

TABLE OF CONTENTS

1.0 PART 1 – GENERAL 1

1.3 Codes and Standards 2
1.4 System Description 3
1.5 Submittals 3
1.6 Delivery, Storage, and Handling 6
1.7 Quality Assurance 7
1.8 Site Conditions 8

2.0 PART 2 – PRODUCTS 9

2.1 Manufacturers 9
2.2 Materials 9
2.3 Equipment 10
2.4 Components 10
2.5 Fabrication 12
2.6 Shop Quality Control 13
2.7 Finishes 15
2.8 Labeling 15

3.0 Part 3 – EXECUTION – (Not Used) 16

3.1 Preparation – (Not Used) 16
3.2 Erection, Installation, and Application – (Not Used) 16
3.3 Field Quality Control – (Not Used) 16
3.4 Adjusting and Cleaning – (Not Used) 16
3.5 Demonstration – (Not Used) 16
3.6 Protection – (Not Used) 16

4.0 List of Appendices 17

4.1 Appendix A – Quality Level Summary Table for Agitators 17
4.2 Appendix B – List of Supporting Documentation to be issued with this Specification 17

LIST OF TERMS

Abbreviations and Acronyms

Term	Definition
ASME	American Society of Mechanical Engineers
AWS	American Welding Society
B&PVC	Boiler and Pressure Vessel Code
CMTR	Certified Materials Test Report
CQA	Commercial Quality Assurance
CSI	Construction Specifications Institute
CWI	Certified Welding Inspector
DCN	Design Change Notice
DPD	Design Proposal Drawing
EQA	Enhanced Quality Assurance
FAT	Factory Acceptance Test
FQA	Full Quality Assurance
IEEE	Institute of Electrical and Electronic Engineers
ISO	International Organization for Standardization
LAWPS	Low Activity Waste Pretreatment System
MDS	Mechanical Datasheet
MSDS	Material Safety Data Sheet
MTBF	Mean Time Between Failures
MTTR	Mean Time to Repair
NCR	Nonconformance Report
NDE	Nondestructive Examination
NRTL	Nationally Recognized Testing Laboratory
OSHA	Occupational Safety and Health Administration
PMI	Positive Material Identification
PQR	Procedure Qualification Record
RFI	Request for Information
WPS	Welding Procedure Specification

Units

Unit	Definition
dBa	decibels, A-weighted
PPM	Parts per Million
µin	micro-inch (one millionth of an inch)

Definitions

BUYER – The company for whom the VENDOR is performing work or services.

COMMERCIAL QUALITY ASSURANCE (CQA) – Level of controls for those items, services, or processes where, based on an evaluation of risk or nuclear safety, no additional quality controls beyond the provider's published or stated attributes of the item, service, or process is required.

DESIGN CHANGE – Within the context of this specification, a DESIGN CHANGE is technically equivalent to a SUBSTITUTION (see SUBSTITUTION). However, the term DESIGN CHANGE may be used to refer to more significant changes to the design compared to a simple substitution.

DEVIATION – Any departure from the requirements contained in the purchase order and specification which VENDOR proposes to incorporate if approved by BUYER.

ENHANCED QUALITY ASSURANCE (EQA) – Level of controls for those items, services, or processes where, based on an evaluation of risk or nuclear safety, additional controls beyond the provider's published or stated attributes of the item, service, or process are needed to verify critical attributes.

FULL QUALITY ASSURANCE (FQA) – Level of controls applied for items, services, or processes that are commensurate with the controls invoked under ASME NQA-1 or other appropriate national consensus standard.

HANDLING – The movement or transportation of items following receipt from offsite/ project locations. This includes movement within storage areas and movement/transportation from receipt or storage areas to field locations. Handling requirements include the need for special handling tools and equipment, restrictions on material composition of surfaces in contact with the item, protection against damage or deterioration, which could occur during movement and placement, protection against physical damage due to excessive shock or vibration, and protection against entry of dirt, water, or other contaminants.

HOLD POINT – A mandatory inspection activity beyond which work shall not proceed until (1) the inspection is performed by an independent inspector and/or BUYER and acceptance is authenticated, or (2) a written release is authorized by the organization who established the hold point.

MORE CONSERVATIVE – "More conservative" shall be interpreted as "more protective of the health, safety and well-being of Site workers and facilities, the public, and environment, as applicable."

NONCONFORMANCE – A deficiency in characteristic, documentation, or procedure that renders the quality of an item or activity unacceptable or indeterminate.

PROCUREMENT QUALITY CLAUSES (QA Clauses) – Procurement quality clauses are used for the acquisition of items and services. The clauses establish contractual obligations for quality program systems, identification, traceability, document submittals, testing, reporting, qualification, special process controls, inspections, etc.

PRODUCT DATA – Printed information including, but not limited to, catalog cuts, color charts, illustrations, diagrams, templates, performance curves, brochures, and other forms of Product literature.

QUALITY ASSURANCE RECORDS – Quality assurance plans, procedures, and records, including completed documents that furnish evidence of the quality of an item or activities affecting quality.

RATED LOAD – The maximum load that can be lifted by the device.

SHALL / MUST – Denotes project requirements, compliance is required.

SHIPPING – The movement of items from an off-site/project location (vendor, warehouse, etc.) to an on-site/project location, or movement from an onsite/ project location to an off-site/project location. Shipping requirements include packaging and securing of items to protect against damage or deterioration which could occur during movement and transportation, protection against physical damage due to excessive shock or vibration, protection against entry of dirt, water, or other contaminants, and protection against other environmental conditions such as temperature or humidity.

SHOULD – Denotes recommendation or expectation, compliance is expected.

SPECIFICATION – Refers to any design, fabrication or supply specification.

STORAGE – Holding of items in areas that address: the probable maximum period to be held, the inherent physical limitations of the item itself, and required protection from potential hazards such as fire, corrosion, chemical attack and environmental conditions. Storage also includes the requirements for maintaining the integrity and operability of items through routine maintenance, cleaning, or other means of preservation.

SUBSTITUTION – Any change or deviation from issued approved drawings, designs, methods, or contract terms and conditions. Changes in products, materials, equipment, methods of construction, and test criteria required by the Contract Documents proposed by the VENDOR after award of the Contract are considered to be requests for substitution.

VENDOR – The Company responsible for the supply of equipment or services.

WITNESS POINT – An inspection activity beyond which work shall not proceed until an inspector and/or BUYER is notified and (1) the inspection is performed and released, or (2) the inspection is deferred and can be completed at a later time, or (3) a written waiver is issued by the organization who established the witness point.

1.0 PART 1 – GENERAL

1.1 Section Scope

This specification applies to tank agitators installed on atmospheric tanks required for the Low Activity Waste Pretreatment System (LAWPS) project. This specification provides requirements for the design, fabrication/construction, examination, testing, packaging, lifting, and shipping of the agitator systems as identified in this specification, cited Construction Specifications Institute (CSI) Sections, and associated mechanical data sheets (MDSs) and design proposal drawings (DPDs). VENDOR shall provide all labor, materials, tooling, and services necessary to manufacture, inspect, test, package and ship the Agitator Assemblies.

1.1.1 Description of Equipment Supply

1.1.1.1 VENDOR shall provide agitator assemblies as specified throughout this document.

Agitator assemblies required (quantity 3, tag numbers listed below):

A. 202LP-LSA-LAG-MIX-301
B. 202LP-LSA-LAG-MIX-302
C. 202LP-LSA-LAG-MIX-303

1.1.1.2 The following summary of major equipment applies to each agitator assembly required:

A. Agitator Drive: Gearbox and Electric drive motor (tag numbers listed below)
   1. 202LP-LSA-LAG-MM-301
   2. 202LP-LSA-LAG-MM-302
   3. 202LP-LSA-LAG-MM-303

B. Agitator wetted components: shaft and impeller
C. Agitator mounting hardware including but not limited to agitator mounting flange with lift attachments, mounting flange gasket(s), shaft seal, and shaft retention feature.
D. Any special tools and/or equipment required for shipping, handling, and installation

1.1.2 Work by Others

1.1.2.1 Design and delivery of interconnecting power, control, and instrumentation cabling beyond the agitator assembly junction boxes

1.1.2.2 Agitator support structure to which the agitator mounting plate attaches

1.1.2.3 On-site installation, operation, and on-site services

1.1.3 VENDOR shall assume complete responsibility for the design, fabrication, inspection, testing, packaging, and shipping, including all documentation as required by BUYER and detailed in the purchase order and this specification.

1.1.4 In cases of conflicts between this specification, MDSs, DPDs, and contract documents or referenced specifications, VENDOR shall notify BUYER of the conflict via the request for information (RFI) process and request an interpretation by BUYER in accordance with CSI Section 01 25 00 "Substitutions and Design Changes."

1.2 Related CSI Sections

01 25 00	Substitutions and Design Changes
01 33 00	Submittals
01 40 00	Quality Assurance
01 60 00	Labeling
01 66 00	Delivery, Storage and Handling
01 81 01	General Services Natural Phenomena Hazard Performance Requirements
40 05 93	Common Motor Requirements for Process and Non-Process Equipment

1.3 Codes and Standards

1.3.1 Work shall be performed in accordance with the referenced codes, standards, and documents for this specification.

1.3.2 The following documents, of the exact issue shown, form a part of the BUYER basis of design to the extent specified in the applicable sections of this document. In the event of a conflict between documents referenced herein and the requirements of this specification, the requirements of this specification shall take precedence only when this specification's requirements are more stringent or conservative. If a code or standard not listed below is to be applied to the scope (see Section 1.1), apply the latest code or standard as of April 16, 2015.

1.3.3 American Society of Mechanical Engineers (ASME)

- ASME Boiler & Pressure Vessel Code (B&PVC) – Section V, 2013, *Nondestructive Examination*
- ASME B&PVC – Section IX, 2013, *Welding, Brazing, and Fusing Qualifications*

1.3.4 American Welding Society (AWS)

- AWS D1.1, 2010, *Structural Welding Code – Steel*
- AWS D1.6, 2007, *Structural Welding Code – Stainless Steel*

1.3.5 Institute of Electrical and Electronic Engineers (IEEE)

- IEEE C2, 2012, *National Electrical Safety Code*

1.3.6 International Organization for Standardization (ISO)

- ISO 1940-1, 2005, *Mechanical Vibration – Balance Quality Requirements for Rotors in a Constant (Rigid) State – Part 1: Specification and Verification of Balance Tolerances*

1.4 System Description

1.4.1 Each agitator system is a centrally located, top entry mechanical mixer mounted to and sealed to the tank nozzle interface that is supported by the facility floor above the associated tank. The agitator blends the tank contents to ensure that a representative sample can be obtained. The agitator drive (motor and gearbox), shaft seal, and shaft bearings are replaceable from the floor level within the facility; the mixer shaft and impeller are not replaceable. The agitator assembly shall include a means for retention of the shaft in its installed position during maintenance on the agitator drive, shaft seals, and shaft bearings.

1.4.2 The following are Enhanced Quality Assurance (EQA) items: impeller, shaft, riser interface plate (mounting flange), shaft retention features, mounting fasteners, and components in the load path during lifting. Additional requirements regarding material certification and material control apply to EQA items. All other items are commercial quality assurance (CQA) items.

1.5 Submittals

Submittals that are listed within this section shall be prepared and processed in accordance with the requirements of CSI Section 01 33 00 "Submittals" and shall include all of the required Quality Assurance documentation in accordance with CSI Section 01 40 00 "Quality Assurance."

1.5.1 Requests for Information (RFI) shall be submitted on form A-6003-417 (provided by BUYER).

1.5.2 VENDOR shall provide Nonconformance Reports (NCR) that specify Accept or Repair to the BUYER with proposed disposition for approval in accordance with QA Clause B22. Work related to that item shall not proceed until the NCR disposition is approved by the BUYER.

1.5.3 Preliminary Design Review Package

VENDOR shall submit a preliminary design review package including the following design documentation.

1. Preliminary calculations for the agitator. Calculations shall include, but not be limited to:

   A. Agitator sizing calculations and basis of design, including pumping rate, drive sizing, and baffle design.
   B. Seismic calculations including base horizontal seismic force and moment inclusive of fluid induced impulsive and convective forces, and loads for anchorage and anchor bolt design.
   C. Support calculations including component weights, and assembly weight and location of center of gravity.

D. Preliminary loads at agitator mounting flange.

2. Preliminary drawings of the agitator assembly, indicating overall dimensions, and dimensions associated with mounting, positioning within the vessel, and baffle details.
3. Product Data.
4. Power and control wiring diagrams.
5. Preliminary data sheets including vendor information and design and operating parameters.

1.5.4 Final Design Review Package

VENDOR shall submit a final design review package including the following design documentation.

1. Calculations justifying the proposed agitator system design. Calculations shall include, but not be limited to:

   A. Seismic calculations including base horizontal seismic force and moment inclusive of fluid induced impulsive and convective forces, and loads for anchorage and anchor bolt design.
   B. Support calculations including component weights, and assembly weight and location of center of gravity.
   C. Calculations associated with lifting and handling.
   D. Fatigue analysis.
   E. MTBF/MTTR analysis.
   F. Erosion/corrosion analysis.
   G. Loads at agitator mounting flange.

2. Dimensional drawings for the agitator assembly, indicating all dimensions necessary for mounting, lifting, and shipping of the completed assembly. Tolerance held for such dimensions shall be noted, either on the specific dimension or in general notes.
3. Drawings associated with lifting, handling, and shipping. Dimensions locating centers of gravity which are generated by calculation shall be so noted on the drawing, and the calculations shall be submitted with the drawings.
4. Detail drawings of components unique to application and installation of the agitator.
5. Product Data / catalog cut sheets, including VENDOR information and design and operating parameters in accordance with QA Clause B33.
6. Power and control wiring diagrams.
7. A factory acceptance test procedure covering all acceptance testing shall be prepared and submitted to the BUYER.
8. Packaging, Storage, Shipping, and Handling Plan including Lifting and Rigging Plan in accordance with QA Clause B85.

1.5.5 Fabrication Authorization Submittal Package

For each agitator assembly included in the contract, VENDOR shall provide timely delivery of the following documents prior to BUYER's release to purchase the materials and/or to commence fabrication of affected components.

1. Overall work plan and schedule.
2. VENDOR shall provide a Fabrication, Inspection, and Test Plan in accordance with QA Clause B13.
3. List of fabrication codes and standards.
4. The VENDOR shall submit Material Safety Data Sheet (MSDS) for all lubricants, fluids, and finishes to the BUYER for approval.
5. All submittals and records pertaining to NDE, welder qualifications, base materials, filler materials, fabrication, weld maps, positive material identification, and inspection shall be traceable to the area and part inspected and shall be accessible for BUYER's examination. VENDOR submittals shall include:

   A. Welder qualification records, procedure qualification records (PQR) and welding procedure specifications (WPS) covering each weld in accordance with QA Clause B28.
   B. Certified weld inspector (including eye tests for inspectors) and visual weld inspection procedures in accordance with QA Clause B25.
   C. Non-destructive examination procedures and personnel qualifications in accordance with QA Clause B31.
   D. Material control procedures. All submittals and records pertaining to the nondestructive examination (NDE), base materials, filler materials, fabrication, and inspection shall be traceable to the area and part inspected and be accessible for BUYER's examination.
   E. Liquid penetrant material certifications. A certification in accordance with QA Clause B46 for penetrant materials shall be submitted for BUYER approval prior to fabrication.

1.5.6 Final Data Package

For each agitator assembly included in the contract, VENDOR shall provide a final data package. Final Data Package shall be submitted and approved by the BUYER prior to release for shipment. Inspections and test reports shall be in accordance with QA Clause B52, unless otherwise noted. This package shall include:

1. Certificates of Conformance in accordance with QA Clauses B73 and B79
2. Signature Verification sheet.
3. Receiving Inspection Reports.
4. Certified Material Test Reports (CMTR) (including chemical and physical properties test results, and heat treat condition and corrosion test results as defined in the applicable MDSs or DPDs) in accordance with QA Clause B49.
5. Liquid Penetrant Material Certification in accordance with QA Clause B46.
6. Completed Fabrication Travelers.
7. Weld Inspection Reports and weld maps correlating to each welder and welder's symbol.
8. Nondestructive Examination Reports in accordance with QA Clause B31.
9. Calibration Certificates/Reports.

   A. Certificates of calibration for measuring and testing equipment used by the VENDOR during acceptance testing and inspection in accordance with QA Clause B12.
   B. Certificates of Calibration for instrumentation supplied by the VENDOR in accordance with QA Clause B61.

10. Dimensional Verification Reports (including critical dimensions).

11. Fastener Tightening Reports.
12. Factory Acceptance Test Reports.
13. Final Inspection Report.
14. Non-Conformance Reports (closed). Nonconformance documentation and reporting shall be in accordance with QA Clause B22.
15. Request for Information (pertinent to the fabricated assembly).
16. Approved Design Changes/Design Change Notices (DCN's).
17. Detailed As Built Assembly Drawings.
18. Calculations of as-built condition.
19. Weld Procedure Qualification Records, Welding Procedure Specifications in accordance with QA Clause B28.
20. Welder Qualifications in accordance with QA Clause B28.
21. Certified Weld Inspector Qualification Records in accordance with QA Clause B25.
22. Power and control wiring diagrams.
23. Electrical Inspection Reports. Certified electrical inspector qualifications shall be submitted in accordance with QA Clause B17.
24. Electrical Test Records.
25. Cleaning Records.
26. Completed Data Sheets.
27. Recommended spare parts list in accordance with QA Clause B82.
28. Certification that all supplied materials are genuine, new, and unused and are not potentially suspect or counterfeit items in accordance with QA Clause B76.
29. Product Data / catalog cut sheets in accordance with QA Clause B33.
30. Certificate of Analysis for gas purity
31. Installation, start-up, operation, maintenance, removal, and disassembly instructions: The VENDOR shall provide Operation and Maintenance Manual(s) for record documentation that shall also include step-by-step installation, start-up, operation, maintenance, removal, and disassembly instructions. The manual(s) shall contain, as a minimum:

    A. Installation instructions for installing the equipment at the destination site
    B. First-time start-up instructions
    C. Operation instructions
    D. Preventative maintenance requirements for operation and storage including maintenance, surveillance, and replacement intervals in order to maintain operability and safety function over the 40 year lifetime of the equipment
    E. Video instructions covering assembly and maintenance operations, including shaft seal and bearing replacement.

1.6 Delivery, Storage, and Handling

1.6.1 VENDOR shall submit a Packaging, Handling, Shipping, and Storage Plan in accordance with QA Clause B85 and CSI Section 01 66 00 "Delivery, Storage, and Handling."

1.6.2 The lifting and rigging plan specifying agitator lifting requirements shall be provided in accordance with CSI Section 01 66 00 "Delivery, Storage, and Handling" and shall include any special precautions related to handling the equipment furnished.

1.7 Quality Assurance

1.7.1 Refer to related CSI Section 01 40 00 "Quality Assurance" for all quality assurance related requirements. See also, Section 2.6, *Shop Quality Control.*

1.7.2 Applicable QA Clauses are summarized in Table 1.7-1. The full QA Clause definition and associated requirements are located in CSI Section 01 40 00 "Quality Assurance."

1.7.3 Quality levels, bases, and quality level based requirements are summarized in Appendix A.

Table 1.7-1 Procurement Quality Clauses

SUPPLIER FABRICATION
B12 Supplier Use of Calibrated Equipment
B13 Fabrication/Inspection/Test Plan
B17 Certified Electrical Inspector (Non-IAEI)
B22 Nonconformance Documentation and Reporting
B25 Certified Weld Inspector (CWI)
B28 Welding Procedures and Qualifications
B31 Nondestructive Examination Process
MATERIAL IDENTIFICATION
B33 Identification of Items with Catalog Cut
TESTING AND TEST DATA
B46 Liquid Penetrant Material Certification
B49 Certified Material Test Report
B52 Inspection and Test Report
B61 Certification of Calibration
B65 Nationally Recognized Testing Laboratory (NRTL) Listed or Labeled
INSPECTION AND ACCEPTANCE CRITERIA
B73 Control of Graded Fasteners
B76 Procurement of Potentially Suspect or Counterfeit Items
B79 Certificate of Conformance
B82 Recommended Spare Parts Listing
MATERIAL HANDLING
B85 Packaging/Shipping Procedures

1.8 Site Conditions

1.8.1 The agitators shall be designed for the environmental conditions specified on the MDSs or DPDs. Site storage conditions specified in CSI Section 01 66 00 "Delivery, Storage, and Handling" should be noted as they may exceed normal operating conditions.

2.0 PART 2 – PRODUCTS

2.1 Manufacturers

2.1.1 Subcontracting to other manufacturers is to be in accordance with contract and quality assurance requirements.

2.2 Materials

2.2.1 General Requirements

2.2.1.1 Materials shall be as specified on the MDSs or DPDs.

2.2.1.2 Material standard editions dated within the previous 10 years from the date of Subcontract award are permissible if VENDOR verifies that physical and chemical properties of material meet the requirements of the cited standard editions.

2.2.1.3 Material substitutions shall not be made without BUYER approval in accordance with CSI Section 01 25 00 "Substitutions and Design Changes."

2.2.1.4 Materials shall be new and free from defects. VENDOR shall furnish legible copies of the CMTRs from the manufacturer and positive material identification (PMI) reports for the impeller, shaft, riser interface plate (mounting flange), shaft retention features, and mounting fasteners. Material exposed to process fluids shall exhibit no chromium carbides or detrimental intermetallic phases as demonstrated by testing and accepting a minimum of one specimen per heat treatment lot in accordance with ASTM A262, Practice A.

2.2.1.5 Supply and use of graded fasteners shall be in accordance with QA Clause B73.

2.2.2 Welding Materials

2.2.2.1 Certified Material Test Reports are required for all filler materials. Certified Material Test Reports for gas shielded consumables shall reflect that testing was done with the same gas (gas mixture) as used in production.

2.2.2.2 The storage, baking and drying of all welding consumables (i.e., covered electrodes, flux cored electrodes and fluxes) shall be as recommended by the manufacturer. Segregation of carbon steel, low alloys, and alloy consumables is required during storage, baking, holding, and handling (including portable ovens).

2.2.2.3 Shielding and purging gases shall be welding grade, having a dew point of less than or equal to (-) 40°F. Certificates of Analysis of the gas purity shall be provided.

2.2.3 Contact Materials

2.2.3.1 Contact materials shall be controlled and documented in accordance with VENDOR's inspection and test plan as approved by BUYER.

2.2.3.2 Contact materials including marking materials, temperature indicating crayons, adhesive backed and pressure sensitive tape, and barrier and wrap materials may be used only under the following limits:

A. The total halogen content shall not exceed 200 parts per million (PPM).
B. No intentionally added low melting point metals such as lead, zinc, copper, tin, antimony and mercury.
C. Anti-spatter compounds shall not contain chlorine, fluorine, sulfur, mercury or other low melting point metals.
D. Materials and residue shall be completely removed when no longer required.
E. Cleaning materials may be non-halogenated solvents or potable water containing no more than 50 PPM chloride.
F. Marking materials and liquid penetrant materials used on austenitic stainless steels and nickel base alloys shall not cause corrosive or other harmful effects. A certification of content shall be furnished for each batch number of penetrant, cleaner, developer and emulsifier and shall include the test results that meet requirement of ASME B&PVC, Section V, Article 6 and latest mandatory addendum. CMTRs for penetrant materials shall be submitted for BUYER approval prior to fabrication.

2.3 Equipment

2.3.1 The agitators associated with this specification are defined on supporting MDS and DPDs identified in the Contract.

2.4 Components

2.4.1 General Design Requirements

2.4.1.1 The agitator assembly unit shall be designed for use in a vertical orientation, as shown on the DPD or MDS.

2.4.1.2 The agitator assembly design shall be capable of removal/installation of the motor and gearbox assembly without a breach in confinement of the vessel.

2.4.1.3 The VENDOR shall provide a Mean Time Between Failure (MTBF) and Mean Time to Repair (MTTR) analysis for operating life showing all assumptions and referenced standards. The agitator assembly design shall include bearings having an L-10 life of greater than 100,000 hours.

2.4.1.4 The VENDOR shall provide detailed assembly mechanical drawings and product data including flange design, seals, and motor/gearbox mounting details for approval by BUYER prior to fabrication of agitator.

2.4.1.5 Design life of agitator impeller, shaft, and components that provide structural support of the agitator shall be 40 years. The system shall be designed for no maintenance

for all wetted parts of the agitator throughout the 40 year design life. The design life of other agitator system components shall be a minimum of 5 years.

2.4.1.6 The VENDOR shall provide an erosion/corrosion allowance evaluation to confirm that the agitator performance will not be compromised due to erosion/corrosion during the design life of the equipment. The chemical and physical properties of the fluid are specified on the associated MDS.

2.4.1.7 The VENDOR shall recommend changes to the interfacing vessel that will improve agitation, or improve the overall design. Design recommendations shall be submitted to the BUYER for approval. Recommendations may include items such as:

2.4.1.8 Agitator installation and mounting provisions.

2.4.1.9 Vessel agitation features, including baffles and vortex breaker.

2.4.1.10 Other recommendations to improve the overall design.

2.4.2 Mechanical Design Requirements

2.4.2.1 For agitator operating conditions refer to the MDS and DPD.

2.4.2.2 The agitator shaft seal shall be maintainable/replaceable without removal of the Agitator Shaft and Impeller. VENDOR shall furnish details for maintenance of the shaft seal assembly. (See respective DPD for additional details for agitator shaft maintenance collar.)

2.4.2.3 Agitator loads: All loads imposed by the agitator at the mounting flange shall be fully evaluated and furnished to BUYER for review and analysis of the facility's interfacing mounting flange. Loads shall include as a minimum, dead loads, live loads, seismic loads, and cyclic loads. Live loads shall include the maximum stall torque and dynamic loads resulting from drawing down the tank liquid level from above to below the agitator impeller.

2.4.2.4 VENDOR shall design and supply a special mounting flange to match the mount as defined on the DPD or MDS. The preferred gasket is identified on the data sheet.

2.4.2.5 The agitator shaft seal components shall be compatible with the vessel contents and meet the vessel design pressure and temperature as defined on the respective MDS and DPD.

2.4.2.6 The mechanical equipment noise emission from the VENDOR supplied agitator systems operating at the maximum normal operating speed shall not exceed 85 dBa at a distance of 3 feet.

2.4.3 Electrical Design Requirements

2.4.3.1 The VENDOR shall identify all required electrical interfaces with the BUYER's Facility.

2.4.3.2 The agitator motor shall be provided in accordance with the requirements specified in MDS, DPDs, and CSI Section 40 05 93 "Common Motor Requirements for Process and Non-Process Equipment."

2.4.3.3 The Agitator System shall comply with IEEE C2, National Electric Safety Code.

2.4.3.4 Electrical components shall be comply with the Nationally Recognized Testing Laboratory (NRTL) listing and labelling requirements specified in QA Clause B65.

2.4.4 Seismic Design Requirements

2.4.4.1 The seismic design loads and acceptance criteria shall be correlated to the applicable seismic design category in CSI Section 01 81 01 "General Services Natural Phenomena Hazard Performance Requirements." Seismic design categories and applicable Limit States are defined on the MDSs or DPDs.

2.4.4.2 The seismic design shall include impulsive and convective fluid induced loads.

2.4.5 Lifting and Handling Requirements

2.4.5.1 VENDOR shall provide a lift and rigging plan in accordance with Section 1.6.3.

2.4.5.2 The VENDOR shall provide and identify lifting points and rigging on VENDOR supplied drawings including weight and center of gravity for the agitator assembly, subassemblies, and components. Lifting and handling operations shall cover horizontal and vertical handling, as required.

2.4.5.3 Any special equipment necessary to assemble, lift, and handle the agitators shall be in accordance with CSI Section 01 66 00 "Delivery, Storage, and Handling" and shall be included with delivery of the agitator.

2.4.6 Operating Functions

2.4.6.1 The agitator assembly shall be designed to start under full load.

2.4.6.2 Design of the agitator shall account for varying operating conditions during planned process operations as specified on the associated MDSs and DPDs.

2.5 Fabrication

2.5.1 All cracks or crevices in contact with the process fluid shall have a seal weld applied to preclude contamination traps. All welds will be ground smooth to a 125 µin (micro-inch) roughness height.

2.5.2 Welding of piping, pressure-containing components, and wetted parts (except structural items), shall be performed in accordance with ASME B&PVC, Section IX. Other welds shall be performed in accordance with AWS D1.1 or AWS D1.6, as applicable.

2.5.3 Any cold forming process, which may significantly increase hardness, shall be in accordance with an approved procedure, which contains hardness testing. The procedure shall be submitted for BUYER's approval.

2.5.4 Hardness testing shall be performed on areas subject to the greatest deformation after cold working or any rework or rectification; the maximum permitted hardness shall not exceed that allowed by the applicable material standard and grade.

2.5.5 If the maximum permitted hardness is exceeded, the VENDOR shall solution anneal in accordance with the applicable ASME specification for that material. VENDOR shall submit a written procedure for suitable heat treatment and testing for BUYER's approval.

2.5.6 Steel grindings and general cleanliness shall be maintained to preclude carbon contamination.

2.5.7 Only stainless steel brushes, clean iron-free sand, ceramic or stainless steel grit shall be used for cleaning stainless steel or nonferrous alloy surfaces. Cleaning tools or materials shall not have been previously used on carbon steel.

2.6 Shop Quality Control

2.6.1 General Requirements

2.6.1.1 Each layer of welding shall be smooth and free of slag inclusions, porosity, excessive undercut, defects and lack of fusion prior to beginning the next layer. In addition, the final weld layer shall be free of coarse ripples, non-uniform bead patterns, high crown, and deep ridges to permit the performance of any required inspection. All arc strikes, starts, and stops shall be confined to the welding groove or shall be removed by grinding. Welds containing defects shall be locally repaired.

2.6.1.2 Temporary attachments shall be removed and areas finished smooth with the parent material.

2.6.1.3 Radiography, ultrasonic testing, and dye penetrant examination, where specified or required, shall be performed in accordance with ASME B&PVC, Section V. All defects found shall be repaired and re-examined by the VENDOR. The VENDOR shall use an approved procedure for all NDE. These procedures shall be submitted to the BUYER for review and approval prior to fabrication.

2.6.1.4 All mandatory NDE (visual, surface flaw and radiography) of agitator assembly shall be carried out after the completion of fabrication, including any heat treatment. Where VENDOR carries out additional NDE prior to any heat treatment process, such examinations shall be included in the Quality Plan or Inspection Schedule.

2.6.1.5 Visual weld inspections shall be performed by certified weld inspectors in accordance with QA Clause B25.

2.6.2 Hold Points

2.6.2.1 The following verification points required by this section shall be in accordance with CSI Section 01 40 00 "Quality Assurance" verified by the BUYER, as applicable. At a minimum, the witness and hold points specified in Table 2.6-1 shall apply:

Table 2.6-1 Hold Point Verification

Verification Point Description	Type of Verification
Prior to Initial Production Welding (First Weld strike for each Weld Procedure)	Hold
Prior to Factory Acceptance Testing	Witness
Prior to Final Inspection of Completed Assembly	Hold
Prior to Shipping	Hold

2.6.2.2 The VENDOR shall provide required notifications of verification points in accordance with CSI Section 01 40 00 "Quality Assurance" as applicable, and shall not proceed past required hold points without written authorization from the BUYER QA representative.

2.6.3 Factory Acceptance Testing

2.6.3.1 The agitator assembly shall be dynamically balanced, at a minimum, to the requirements of ISO 1940-1, G6.3. The VENDOR shall make all attempts to balance the Agitator Assembly to the requirements of ISO 1940-1, G2.5.

2.6.3.2 Any assembly methods shall be demonstrated to the BUYER. These methods shall be explained in detail in the VENDOR's instruction manual and the process recorded on video for future training purposes. This shall include, at a minimum, the motor, gear reduction unit and shaft seal and bearing removal/replacement, including operational verification of shaft retention feature during disassembly, maintenance, and assembly operations.

2.6.4 Shop Inspection

2.6.4.1 The VENDOR shall prepare a detailed fabrication/inspection and test plan, including insertion of BUYER designated source inspection/witness hold and notification points. The VENDOR shall be responsible for performing and documenting compliance with all relevant specification requirements, drawings, and related standards.

2.6.4.2 The VENDOR shall develop, submit for BUYER review, and implement a procedure to dimensionally inspect all critical dimensions (i.e. dimensional inspections shall be within specified dimensional tolerances) as outlined on the DPDs. The procedure shall identify the type of measuring devices to be used. The VENDOR shall dimensionally inspect each item prior to final assembly of the components. Dimensional inspection documentation shall be included in the required document package.

2.6.5 Final Inspection

2.6.5.1 Final inspection of the completed assembly shall be the sole responsibility of VENDOR.

2.6.5.2 VENDOR shall prepare a final inspection report for each contract item, which documents the results of the final inspection.

2.6.5.3 All inspection documentation shall be complete with all inspection signatures and assembled as defined in CSI Section 01 33 00 "Submittals."

2.6.5.4 Final inspection is a required hold point and shall be performed to confirm the following:

A. Finished dimensions and cleanliness of the agitator is in compliance with the relevant drawings and specifications after completion of all tests.
B. Vulnerable equipment items (e.g., small bore piping, seals, etc.) are free from damage.
C. Equipment and interface orientations and configurations are correct.
D. Structural and equipment bolt tightening has been completed to manufacturer requirements.
E. Surface finish matches design documents.
F. Labeling includes the correct item identification and marking in compliance with CSI Section 01 60 00 "Labeling."
G. All VENDOR issued as-built drawing data matches the final fabrication.

2.6.6 Source Quality Control

2.6.6.1 All records pertaining to base materials, filler materials, fabrication, and inspection including welder's qualification record shall be accessible for BUYER's examination.

2.6.6.2 VENDOR shall make a complete set of BUYER approved drawings and other documents available to BUYER's representative at the time the quality surveillance activities are being conducted.

2.6.6.3 BUYER's review of VENDOR's drawings, or release of the equipment for shipment by BUYER's representative, shall in no way relieve VENDOR of the responsibility for complying with all the requirements of this specification and the purchase order.

2.7 Finishes

2.7.1 Stainless steels shall not be painted or otherwise coated.

2.7.2 Non-stainless steel components shall be provided with a baked or two-part epoxy coating.

2.8 Labeling

2.8.1 VENDOR shall apply labels in accordance with the requirements in CSI Section 01 60 00 "Labeling."

3.0 PART 3 – EXECUTION – (NOT USED)

3.1 Preparation – (Not Used)

3.2 Erection, Installation, and Application – (Not Used)

3.3 Field Quality Control – (Not Used)

3.4 Adjusting and Cleaning – (Not Used)

3.5 Demonstration – (Not Used)

3.6 Protection – (Not Used)

4.0 LIST OF APPENDICES

4.1 Appendix A – Quality Level Summary Table for Agitators

4.2 Appendix B – List of Supporting Documentation to be issued with this Specification

Appendix A – Quality Level Summary Table for Agitators

Components	Quality Level	Basis	Quality Level Based Minimum Requirements	NPH / Limit State
• Impeller • Shaft • Shaft seal • Shaft retention feature • Agitator mounting plate • Any structural components (incl. fasteners) supporting any EQA components	EQA	Design Life of 40 yr. & Confinement barrier between C5 and C2 zones	• CMTR's • No chromium carbides or detrimental intermetallic phases per ASTM A262, Practice A test. • PMI • Shaft retention feature performance acceptance testing	SDC-2 / Limit State C
All other components not identified EQA	CQA	Not EQA	• N/A	SDC-1 / Limit State A

NOTE: This table is a summary of equipment quality level definitions and is intended to supplement the quality levels defined on BUYER provided MDSs and DPDs

Appendix B – List of Supporting Documentation to be issued with this Specification

Data Sheets:

202LP-LSA-LAG-MIX-301	Lag Storage Mixer 301
202LP-LSA-LAG-MIX-302	Lag Storage Mixer 302
202LP-LSA-LAG-MIX-303	Lag Storage Mixer 303

Drawings:

H-16-001600, Sheet 5	LAWPS Lag Storage Maintenance Room Mechanical Layout
H-16-001620, Sheets 1&2	LAWPS Lag Storage Tank Agitator Assembly DPD
H-16-001625, Sheet 1	LAWPS Lag Storage Agitator Riser DPD
H-16-001750, Sheet 5	LAWPS Lag Storage Vault Mechanical Layout
H-16-001751, Sheets 1-3	LAWPS Lag Storage Tank LAG-TK-301 DPD
H-16-001752, Sheets 1-3	LAWPS Lag Storage Tank LAG-TK-302 DPD
H-16-001753, Sheets 1-3	LAWPS Lag Storage Tank LAG-TK-303 DPD
	Lag Storage Tank Vendor Drawings

SPECIFICATION

15-2-022

SPECIALTY VALVE AND INSTRUMENT PROCUREMENT SPECIFICATION

AECOM ATKINS AREVA

LOW ACTIVITY WASTE PRETREATMENT SYSTEM

Project No. 31269 (T5L01)

Document No. 15-2-022

Safety Related ☒ Non-Safety Related ☐

SPECIALTY VALVE AND INSTRUMENT PROCUREMENT SPECIFICATION

BRIAN DENNIS SEVERSON
STATE OF WASHINGTON
53874
REGISTERED
PROFESSIONAL ENGINEER

5/16/17

FOR PERMITTING
BDS 5/16/17

Prepared for
Washington River Protection Solutions, LLC

Revision: 1 Status: Final

REVISION PAGE

Project Name:	LAWPS		Discipline: Mechanical
Client:	Washington River Protection Solutions		Project Number: 31269 (T5L01)
			Latest Revision: 1

Revision Signatures

BD Severson Brian Severson Digitally signed by Brian Severson Date: 2017.05.15 08:15:35 -07'00'		D. Skeath David Skeath Date: 2017.05.15 09:20:14 -07'00'	
Prepared by L Ulbricht Larry Ulbricht Digitally signed by Larry Ulbricht Date: 2017.05.15 10:03:34 -07'00'	Date	Approved by (SDE/Lead) P. Bell Paul Bell Digitally signed by Paul Bell Date: 2017.05.16 08:44:47 -06'00'	Date
Checked by S. Lin SiYuan Lin 2017-05-16 11:06:32	Date	Approved by (QA) D Priebe For DP Michael Schultze Digitally signed by Michael Schultze Date: 2017.05.16 09:34:36 -06'00'	Date
Verified by (if required)	Date	Approved by (PEM)	Date

Status	Rev. No.	Date	Prepared By	Pages	Description of Changes
Final	0	2/13/17	BD Severson	77	Approved for Award
Final	1	5/16/17	BD Severson	78	Approved for Award Revised quantity of and sizes of valves in scope of supply Revised number of Pressure Instruments in scope of supply Deleted section on air accumulators Miscellaneous changes marked with revision bars in the left-hand margin

Safety Related Yes ☒ No ☐	Quality Level Full QA ☒ Enhanced QA ☐ Commercial QA ☐

Table of Contents

1 SCOPE 1
2 APPLICABLE DOCUMENTS 2
2.1 Government Documents 2
2.2 Non-Government Documents 2
2.3 Other Documents 5
3 TECHNICAL REQUIREMENTS 5
3.1 Item Definition 5
3.1.1 Interface Definition 21
3.2 Requirements 21
3.2.1 Safety Requirements 21
3.2.2 Functional Requirements 23
3.2.3 Physical Requirements 24
3.2.4 Reliability 26
3.2.5 Availability 26
3.2.6 Maintainability 26
3.2.7 Environment 27
3.3 Design and Construction 28
3.3.1 Parts/Materials/Processes 28
3.3.2 Radiation 32
3.3.3 Cleanness and Foreign Material Exclusion 32
3.3.4 Corrosion of Parts 33
3.3.5 Protective Coatings 33
3.3.6 Interchangeability 33
3.3.7 Identification and Marking 33
3.3.8 Human Factors Engineering 36
3.3.9 Document Submittals 36
3.3.10 Personnel and Training 41
3.3.11 Valve Fabrication and Testing 41
3.3.12 Non-Destructive Examination 43
3.3.13 Weld Repairs 44
3.3.14 I&C Requirements 45
3.3.15 Electrical Requirements for Mechanical Equipment 47
3.3.16 NPH Requirements 49
4 QUALITY ASSURANCE 54
4.1 General 54
4.2 QA Submittals 56
4.3 Quality Assurance Requirements 57
4.3.1 General Requirements 57
4.3.2 VENDOR Design 58
4.3.3 Electrical Equipment Requirements 58
4.3.4 Inspection and Testing 59
4.3.5 Receipt Inspection 59
4.3.6 Noncompliances and Nonconformance 60
4.3.7 VENDOR Procurement of FQA items/Materials 60
4.3.8 Suspect/Counterfeit Parts 61
4.3.9 Measuring and Test Equipment 61
4.4 Acceptance Criteria 61

4.5 Verification ... 62
4.6 Inspections and Tests ... 62
4.6.1 Factory Acceptance Test Plan and Procedures ... 62
4.6.2 Factory Acceptance Test Report ... 62
4.6.3 Functional Test Plan and Procedures ... 63
4.6.4 Functional Test Report ... 63
5 PREPARATION FOR DELIVERY ... 63
5.1 General ... 63
5.2 Preservation and Packaging ... 63
5.3 Packing ... 64
5.4 Transportation and Storage ... 64
5.5 Marking ... 65
5.6 Handling ... 65
5.6.1 Lift and Rigging Plan ... 65
5.6.2 Lifting Attachments and Equipment Design ... 66
5.6.3 Lift Point Marking ... 67
5.6.4 Critical Welds ... 67
5.6.5 Special Lifting Devices ... 67
5.6.6 Below-the-Hook Device Markings ... 67
5.7 Shipping ... 67
5.7.1 Transport and Tie-Down Instructions ... 68
5.7.2 Unpacking and Assembly Drawing ... 68
5.7.3 Offloading ... 68
6 Notes ... 68

List of Figures

Figure 3-1 Standard Cartridge Plug Valve ... 8
Figure 3-2 Remote Valve Shaft Assembly Configuration ... 9
Figure 3-3: Remote Valve Sleeved Assembly Configuration ... 10
Figure 3-4 3-Way Valve Flow Patterns ... 16
Figure 3-5 Type NH Equipment Label ... 35

List of Tables

Table 3-1: List of Valve Configurations and Safety Functions ... 11
Table 3-2 Flow Pattern and Body Type for 3-Way Valves ... 16
Table 3-3 Safety Functions of Process Valve Subassemblies/Components ... 22
Table 3-4 Valve Location by Area ... 28
Table 3-5 Type NH Label Size ... 36
Table 3-6 Valve Hold Point Verification ... 42
Table 3-7 Acceptance Criteria for Limit States ... 50
Table 3-8 Preliminary Response Spectra ... 53
Table 4-1 Procurement Quality Clauses ... 56

LIST OF TERMS

Abbreviations and Acronyms

AC	Alternating Current
AISC	American Institute of Steel Construction
ALARA	As Low As Reasonably Achievable
ANSI	American National Standards Institute
API	American Petroleum Institute
ASCE	American Society of Civil Engineers
ASME	American Society of Mechanical Engineers
ASNT	American Society for Nondestructive Testing
ASTM	American Society for Testing and Materials
AWS	American Welding Society
BTH	Below The Hook
CFA	Crossflow Filter Area
CGI	Commercial Grade Item
CMTR	Certified Materials Test Report
C of C	Certificate of Conformance
CONF_SS	Confinement Safety Significant
CP-MPS	Cesium Product Misroute Prevention System
CQA	Commercial Quality Assurance
CSA	Cesium Product Tank Area
CWI	Certified Welding Inspector
DC	Direct Current
DCN	Design Change Notice
DOE	Department of Energy
DOT	Department of Transportation
DPD	Design Proposal Drawing
DS	Data Sheet
EIN	Equipment Identification Number
EPDM	Ethylene Propylene Diene Terpolymer
EQA	Enhanced Quality Assurance
ESL	Evaluated Suppliers List
EULA	End Users Licensing Agreement
FAT	Factory Acceptance Test
FFA	Filter Feed Tank Area
FM	Factory Mutual

FMEDA	Failure Modes, Effects and Diagnostic Analysis
FQA	Full Quality Assurance
GRS	Gas Removal System
I&C	Instrumentation and Controls
IBC	International Building Code
ICEA	Insulated Cable Engineers Association
IEC	International Electrotechnical Commission
IEEE	Institute of Electrical and Electronics Engineers
ISRS	In-Structure Response Spectra
IXA	Ion Exchange Area
LAWPS	Low Activity Waste Pretreatment System
LS	Limit State
LS-MPS	Lag Storage Misroute Prevention System
LSA	Lag Storage Area
MSR	Master Submittal Register
MT	Magnetic Particle Test
MTBF	Mean Time Between Failures
M&TE	Measuring and Test Equipment
NCR	Nonconformance Report
NDE	Nondestructive Examination
NEC	National Electric Code
NEMA	National Electric Manufacturer's Association
NFPA	National Fire Protection Association
NIST	National Institute of Standards and Technology
NPH	Natural Phenomena Hazard
NPS	Nominal Pipe Size
NQA	Nuclear Quality Assurance
NRTL	Nationally Recognized Testing Laboratory
OSHA	Occupational Safety and Health Administration
P&ID	Piping and Instrumentation Diagram
PMI	Positive Material Identification
PO	Purchase Order
PPM	Parts per Million
PP-MPS	Pretreatment Process Misroute Prevention System
PQR	Procedure Qualification Record
PSSH	Packaging, Storage, Shipping, and Handling Plan
PT	Penetrant Testing

PTFE	Polytetrafuoroethylene
PVC	Polyvinyl Chloride
PWHT	Post Weld Heat Treatment
QA	Quality Assurance
QAP	Quality Assurance Program/Quality Assurance Plan
RC	Risk Category
RFI	Request for Information
RRS	Required Response Spectrum
RT	Radiographic Testing
RTD	Resistance Temperature Detector
SCI	Suspect Counterfeit Items
SDC	Seismic Design Category
SG	Seismic Use Group
SIF	Safety Instrumented Function
SIL	Safety Integrity Level
SIS	Safety Instrumented System
SMAW	Shielded Metal Arc Welding
SOW	Statement of Work
SPL	Sound Pressure Level
SRA	Spent Resin Area
SRSS	Square Root of the Sum of the Squares
SSC	Structures, Systems, and Components
STES	Standby Tank Exhaust System
TW-MPS	Treated Waste Misroute Prevention System
UHMWPE	Ultra High Molecular Weight Polyethylene
UL	Underwriters Laboratories
USA	United States of America
UV	Ultraviolet
VDC	Volts Direct Current
VT	Visual Examination
WPS	Welding Procedure Specification
WRC	Welding Research Council
WRPS	Washington River Protection Solutions
XLPE	Cross-Linked Polyethylene

Units

U.S. customary and SI units

Abbreviation	Unit	Quantity
Ci	curie	radioactivity
cP	centipoise	viscosity
dBA	decibel	sound level
ft	feet	distance
g	grams	mass
in	inches	distance
ml	milliliter	volume
mm	millimeter	distance
°F	degrees Fahrenheit	temperature
°C	degrees Celsius	temperature
PPM	parts per million	concentration
psig	pounds per square inch	pressure

Definitions

BUYER – The company for whom the VENDOR is performing work or services.

COMMERCIAL QUALITY ASSURANCE (CQA) - Level of controls for those items, services, or processes where, based on an evaluation of risk or nuclear safety, no additional quality controls beyond the provider's published or stated attributes of the item, service, or process is required.

CONTRACT DOCUMENTS - All the written documents defining the commercial and technical execution of a particular contract. The contract documents establish the agreement between the BUYER and VENDOR, defining the scope of work and all terms and conditions that apply. Contract documents include but are not limited to Statements of Work (SOW), scoping documents, design/fabrication drawings, technical specifications and equipment data sheets, Requests for Information (RFI), and Document Change Notices (DCN).

CRITICAL DIMENSION – Important dimensions or tolerances that, once verified, will provide reasonable assurance that the component will perform its intended function.

DESIGN CHANGE – Within the context of this specification, a DESIGN CHANGE is technically equivalent to a SUBSTITUTION (see SUBSTITUTION). However, the term DESIGN CHANGE may be used to refer to more significant changes to the design compared to a simple substitution.

DEVIATION – any departure from the requirements contained in the purchase order and specification which VENDOR proposes to incorporate if approved by BUYER.

ENHANCED QUALITY ASSURANCE (EQA) - Level of controls for those items, services, or processes where, based on an evaluation of risk or nuclear safety, additional controls beyond the provider's published or stated attributes of the item, service, or process are needed to verify critical attributes.

FULL QUALITY ASSURANCE (FQA) - Level of controls applied for items services, or processes that are commensurate with the controls invoked under American Society of Mechanical Engineers

(ASME) Nuclear Quality Assurance (NQA)-1 or other BUYER approved QA program as defined in the Statement of Work (SOW).

HANDLING - The movement or transportation of items following receipt from offsite/ project locations. This includes movement within storage areas and movement/transportation from receipt or storage areas to field locations. Handling requirements include the need for special handling tools and equipment, restrictions on material composition of surfaces in contact with the item, protection against damage or deterioration, which could occur during movement and placement, protection against physical damage due to excessive shock or vibration, and protection against entry of dirt, water, or other contaminants.

HOLD POINT – A mandatory inspection activity beyond which work shall not proceed until (1) the inspection is performed by an independent inspector and/or BUYER and acceptance is authenticated, or (2) a written release is authorized by the organization who established the hold point.

MORE CONSERVATIVE – "More conservative" shall be interpreted as "more protective of the health, safety and well-being of Site workers and facilities, the public, and environment, as applicable."

NONCONFORMANCE – a deficiency in characteristic, documentation or procedure that renders the quality of an item or activity unacceptable or indeterminate.

PROCUREMENT QUALITY CLAUSES (QA CLAUSES) – Procurement quality clauses are to be used for the acquisition of items and services. The clauses establish contractual obligations for quality program systems, identification, traceability, document submittals, testing, reporting, qualification, special process controls, inspection, etc.

PRODUCT DATA – Printed information including, but not limited to, catalog cuts, color charts, illustrations, diagrams, templates, performance curves, brochures, and other forms of Product literature.

QUALITY ASSURANCE RECORDS – Quality assurance plans, procedures, and records, including completed documents that furnish evidence of the quality of an item or activities affecting quality.

RATED LOAD – The maximum load that can be lifted by the device.

SHALL / MUST – Denotes project requirements, compliance is required.

SHIPPING – The movement of items from an off-site/project location (VENDOR, warehouse, etc.) to an on-site/project location, or movement from an onsite/ project location to an off-site/project location. Shipping requirements include packaging and securing of items to protect against damage or deterioration which could occur during movement and transportation, protection against physical damage due to excessive shock or vibration, protection against entry of dirt, water, or other contaminants, and protection against other environmental conditions such as temperature or humidity.

SHOULD – Denotes recommendation or expectation, compliance is expected.

SPECIFICATION – Refers to any design, fabrication or supply specification.

STORAGE – Holding of items in areas that address: the probable maximum period to be held, the inherent physical limitations of the item itself, and required protection from potential hazards such as fire, corrosion, chemical attack and environmental conditions. Storage also includes the requirements for maintaining the integrity and operability of items through routine maintenance, cleaning, or other means of preservation.

SUBSTITUTION – Any change or deviation from issued approved drawings, designs, methods, or contract terms and conditions. Changes in products, materials, equipment, methods of construction, and test criteria required by the Contract Documents proposed by the VENDOR after award of the Contract are considered to be requests for substitution.

VENDOR – The Company responsible for the supply of equipment or services.

WETTED – Within the context of this specification, "wetted" shall refer to any parts or surfaces designed to come in contact with waste process fluid (in liquid or vapor form) during normal operations.

WITNESS POINT – An inspection activity beyond which work shall not proceed until an inspector and/or BUYER is notified and (1) the inspection is performed and released, or (2) the inspection is deferred and can be completed at a later time, or (3) a written waiver is issued by the organization who established the witness point.

1 SCOPE

This specification applies to the specialty valves required for the Low Activity Waste Pretreatment System (LAWPS) project. This specification also applies to a number of pressure instruments that will use valve bodies as housings. This specification provides requirements for the design, fabrication, examination, testing, packaging, lifting, and shipping as identified in the following sections and associated data sheets and drawings.

The specialty valves and instrument bodies provide pressure containment, isolation, modulation, and diversion of radioactive fluids and process services. All the subject valves in this specification are tapered plug valves with self-contained removable inner cartridge/modules.

A number of valve bodies will be used to house pressure instruments. These valve bodies will contain a pressure transmitting cartridge in lieu of the plug valve cartridge. The valve bodies containing pressure instruments will not be capable of isolation, modulation or diversion.

The following items are included in the scope of supply for this Specification.

Scope of Supply

Refer to the Design Proposal Drawings (DPD), Data Sheets (DS) referenced in Section 3.1, Figure 3-1, Figure 3-2, and Figure 3-3 for additional details.

A. Valve body
B. Valve Cartridge
C. Pressure Transmitting Cartridges (as applicable)
D. Actuators (manual and/or automatic as applicable)
E. Shield Plugs (as applicable)
F. Shield Collars (as applicable)
G. Valve Sleeves and Seals (as applicable)
H. Valve Support Rings (as applicable)
I. Valve Actuation Shafts (as applicable)
J. Special Tools and Handling Equipment (as required)
K. Actuator Accessories. (as applicable)

The scope of the services identified in this specification encompasses Safety Significant (Full Quality Assurance), Enhanced Quality Assurance and Commercial Quality Assurance items. The Quality Level of each item is identified on the Data sheets and the DPDs.

The BUYER shall be advised immediately in writing of any conflicts between the DPDs, Data sheets, this specification, and supporting information as soon as they are identified. No material substitutions or deviations to this specification will be allowed without written approval from BUYER.

2 APPLICABLE DOCUMENTS

Work shall be performed in accordance with the referenced codes, standards, and documents for this specification.

The following codes and standards, of the exact issue shown, form part of the BUYER basis of design to the extent specified in the applicable sections of this document. In the event of a conflict between documents referenced herein and the requirements of this specification, the requirements of this specification shall take precedence only when this specification's requirements are more stringent or conservative. If a code or standard not listed below is to be applied to the scope (see Section 1.0), apply the latest code or standard as of April 16, 2015.

2.1 Government Documents

DOE-RL-92-36, Release 80, 2016	Hanford Site Hoisting and Rigging Manual
DOE Order 414.1D, 2011	Quality Assurance, and Attachment 4 Safety Software Quality Assurance Requirements for Nuclear Facilities

2.2 Non-Government Documents

ANSI/AISC N690-12, 2012	Specification for Safety-Related Steel Structures for Nuclear Facilities
ANSI/ANS 2.26, 2004	Categorization of Nuclear Facility Structures, Systems, and Components for Seismic Design
API 598, 2009	Valve Inspection and Testing
API 599, 2013	Metal Plug Valves—Flanged, Threaded and Welding Ends
ASCE 7-10, 2010	Minimum Design Loads for Buildings and other Structures (3RD printing)
ASCE 43-05, 2005	Seismic Design Criteria for Structures, Systems, and Components in Nuclear Facilities
ASME BPVC Section VIII, 2013	Rules for Construction of Pressure Vessels, Division 1
ASME BPVC Section IX, 2013	Welding, Brazing and Fusing Qualifications
ASME BTH-1, 2014	Design of Below-the-Hook Lifting Devices
ASME B16.25, 2012	Buttwelding Ends
ASME B16.34, 2013	Valves-Flanged, Threaded and Welding End
ASME B30.20, 2013	Below-the-Hook Lifting Devices

ASME B31.3, 2012	Process Piping
ASME B46.1, 2009	Surface Texture (Surface Roughness, Waviness, and Lay)
ASME NQA-1, 2008 and 2009A	Quality Assurance Program Requirements for Nuclear Facility Applications
ASME QME-1, 2012	Qualification of Active Mechanical Equipment Used in Nuclear Facilities
ASNT SNT-TC-1A, 2011	Recommended Practice for Personnel Qualification and Certification in Nondestructive Testing
ASTM A193/A193M, 2014	Standard Specification for Alloy-Steel and Stainless Steel Bolting for High Temperature or High Pressure Service and Other Special Purpose Applications
ASTM A194/A194M, 2014	Standard Specification for Carbon and Alloy Steel Nuts for Bolts for High Pressure or High Temperature Service, or Both
ASTM A240/A240M, 2015	Standard Specification for Chromium and Chromium-Nickel Stainless Steel Plate, Sheet, and Strip for Pressure Vessels and for General Applications
ASTM A262, 2015	Standard Practice for Detecting Susceptibility to Intergranular Attack in Austenitic Stainless Steels
ASTM A276, 2015	Standard Specification for Stainless Steel Bars and Shapes
ASTM A312/A312M, 2015	Standard Specification for Seamless, Welded, and Heavily Cold Worked Austenitic Stainless Steel Pipes
ASTM A380, 2013	Standard Practice for Cleaning, Descaling, and Passivation of Stainless Steel Parts, Equipment, and Systems
ASTM A554, 2015	Standard Specification for Welded Stainless Steel Mechanical Tubing
ASTM D4329, 2013	Standard Practice for Fluorescent Ultraviolet (UV) Lamp Apparatus Exposure of Plastics
ASTM F436, 2011	Standard Specification for Hardened Steel Washers
AWS A4.2, 2006	Standard Procedures for Calibrating Magnetic Instruments to Measure the Delta Ferrite Content of Austenitic and Duplex Ferritic-Austenitic Stainless Steel Weld Metal

AWS D1.6/D1.6M, 2007	Structural Welding Code – Stainless Steel
IBC, 2012	International Building Code
ICC-ES AC 156, 2010	Acceptance Criteria for Seismic Certification by Shake-Table Testing of Nonstructural Components
ICEA 5-73-532, 2014	Standard for Control, Thermocouple, Extension and Instrumentation Cable
IEC 61508, 2010	Functional Safety of Electrical/Electronic/Programmable Electronic Safety-Related Systems
IEEE 142, 2007	Recommended Practice for Grounding of Industrial and Commercial Power Systems
IEEE 344, 2013	IEEE Standard for Seismic Qualification of Equipment for Nuclear Power Generating Stations
IEEE 382, 2013	IEEE Standard for Qualification of Safety Related Actuators for Nuclear Power Generating Stations
IEEE 383, 2008	IEEE Standard for Qualifying Electric Cables and Splices for Nuclear Facilities
IEEE 384, 2008	Standard Criteria for Independence of Class 1E Equipment and Circuits
IEEE 1202, 2006 (R2012)	Flame Propagation Testing of Wire and Cable
ISA 75.01.01, 2012	Industrial-Process Control Valves – Part 2-1: Flow Capacity – Sizing Equations for Fluid Flow Under Installed Conditions
ISA 75.17, 1989	Control Valve Aerodynamic Noise Prediction
MSS SP-55, 2011	Quality Standard for Steel Castings for Valves, Flanges, Fittings, and Other Piping Components
NEMA ICS 2 2000 (R2005)	Controllers, Contractors and Overload Relays Rated 600V
NEMA WC57, 2014	Standards for Control, Thermocouple Extension, and Instrumentation Cables
NEMA WC70, 2009	Power Cables Rated 2000 Volts or Less for the Distribution of Electrical Energy
NFPA 70, 2014	National Electric Code
NFPA 70E, 2015	Electrical Safety in the Workplace
UL 6, 14th Edition	Electrical Rigid Metal Conduit - Steel

UL 44, 2014	Rubber and Insulated Wires and Cables
UL 83, 2014	Thermoplastic Insulated Wires and Cables
UL 508A, 2013	Industrial Control Panels
UL 870, 2008	Wireways, Auxiliary Gutters, and Associated Fittings
UL 1203, 2013	Explosion Proof and Dust Ignition Proof Electrical Equipment for Use in Hazardous (Classified) Locations
UL 1581, 2001	Safety Reference Standard for Electrical Wires, Cables, and Flexible Cords
UL 2062, 2006	Outline of Investigation of Enclosures for Use in Hazardous (Classified) Locations

2.3 Other Documents

• RPP-RPT-58553, Rev. 6	LAWPS Safety Control Development and Design Integration
• TFC-BSM-IRM_DC-C-07, Rev A-5	VENDOR Processes
• Form A-6002-544	Critical characteristics for CGI
• Form A-6003-417	Requests for Information (RFI)
• Form A-6005-315	Transmittal Letter
• Form A-6006-661	Washington River Protection Solutions (WRPS) Quality Assurance Requirements for Design and Fabrication

3 TECHNICAL REQUIREMENTS

3.1 Item Definition

The specialty valves and instruments will be used throughout the LAWPS facility. Valves are required to isolate and/or divert highly radioactive waste streams, acidic and caustic solutions, and treated process water. Valves and instruments are located in: a) areas where access is limited, but possible; and b) areas where radiation levels are too high to permit human-access, even after decontamination has been performed. In these cases, failed components must be removable remotely, e.g. with the use of long-reach tools. Maintenance provisions shall demonstrate ALARA (As Low As Reasonably Achievable) principles.

All valves shall be a tapered plug design with an easily removable inner module to facilitate replacement of internal components. The body shall be welded directly to the process piping. For remotely maintainable valves, the valve plug, cage and sleeve will be removable and replaceable remotely, and shall not require the need to "cut-out" the sleeve / cage, as is necessary with conventional plug valves. Valve sizes will range from NPS 1 to NPS 8. Valves may be two-way or three-way, standard port, or full port. Modulating control valve plug sizes and profiles will be sized by VENDOR for specific process and

operating conditions. Specific valve size, valve action, porting, design pressure, design temperature, and operating conditions for each valve tag number are identified on the applicable DPD and DS.

Valves will be manually operated, or remotely operated with a pneumatic actuator, either with or without a manual hand-wheel, as shown in Table 3-1 and the data provided by the BUYER. Specific configurations for each specific valve tag number are identified on the applicable DPD and DS. Valve actuator details are shown on H-16-000003.

Valves that are easily accessible will have the hand wheel and/or actuator directly coupled to the valve stem. These valves can be accessed for "hands on" maintenance and do not require provisions to operate or perform maintenance remotely. Refer to Figure 3-1.

Actuators for valves located in the limited access pits will be outside of the pit areas. The LAWPS Pits are high-radiation areas, surrounded by biological shielding on all sides, including the pit ceiling, which is also the operational floor – through which the valves are accessed for maintenance. A valve actuation shaft will extend from the actuator through the pit shielding to the valve stem. Actuation shaft lengths are defined on the applicable DPD and DS. A VENDOR supplied shield plug will interface with the facility shielding to reduce possible radiation streaming paths.

Valves located in limited access pits will be of the "remote access valve shaft assembly" configuration, or the "remote access valve sleeved assembly" configuration. Refer to Figure 3-2 and Figure 3-3 for additional details. Specific configuration requirements for each valve tag number will be defined on the applicable BUYER supplied DPD and DS.

The Remote Valve Shaft configuration includes a short tubular sleeve that extends down from the shield plug into the pit. Specific lengths of the shaft extensions are defined on the applicable DPD and DS.

The Remote Valve Sleeved configuration includes a tubular valve sleeve that extends down from the shield plug to the valve body. An additional VENDOR supplied shielding split collar attaches to the upper end of the tubular valve sleeve. There is also a VENDOR supplied support ring that is welded to the tubular valve sleeve that interfaces with facility piping/equipment structural support steel (see Figure 3-3).

Refer to Table 3-2 for 3-way port configuration and Figure 3-4 for 3-way flow patterns.

A number of valve bodies will be used to house a pressure transmitter. These will have the same valve body design, the cartridge however will contain a pressure transmitter in lieu of a valve plug.

The valve configurations depicted in Figure 3-1, Figure 3-2, and Figure 3-3 are proposed concepts only. It is up to the VENDOR to supply valves that meet the requirements of this specification, the BUYER Supplied DPDs and Data sheets.

All valves identified as being the Remote Valve Sleeved Assembly configuration shall be maintainable from the operational floor. If any valves identified as Remote Valve Sleeved Assembly cannot be maintained from the operational floor using long reach tools, the VENDOR shall propose an alternate design configuration to ensure the applicable valves are maintainable from the operational floor.

All valves identified as being the shaft configuration are installed on removable piping assemblies called jumpers and do not require being maintainable from the operational floor.

Valves identified as being of the standard configuration are in areas where hands on maintenance is possible.

Figure 3-1 Standard Cartridge Plug Valve

This configuration is used for valves located in accessible areas and does not require provisions for remote operability and maintenance.

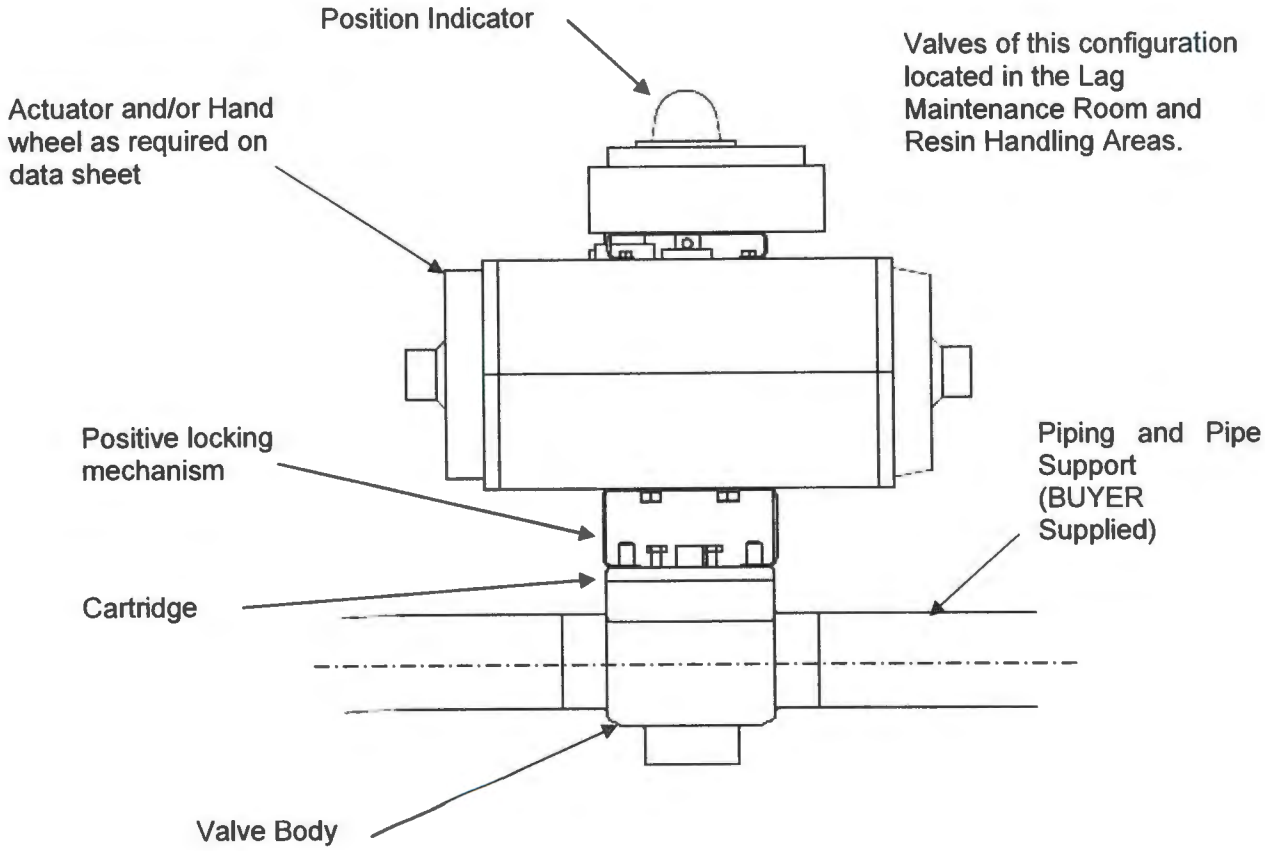

Figure 3-2 Remote Valve Shaft Assembly Configuration

This configuration is used for valves installed on jumpers located in limited access pits
(These valves are below the operational floor and require long shaft for operation)

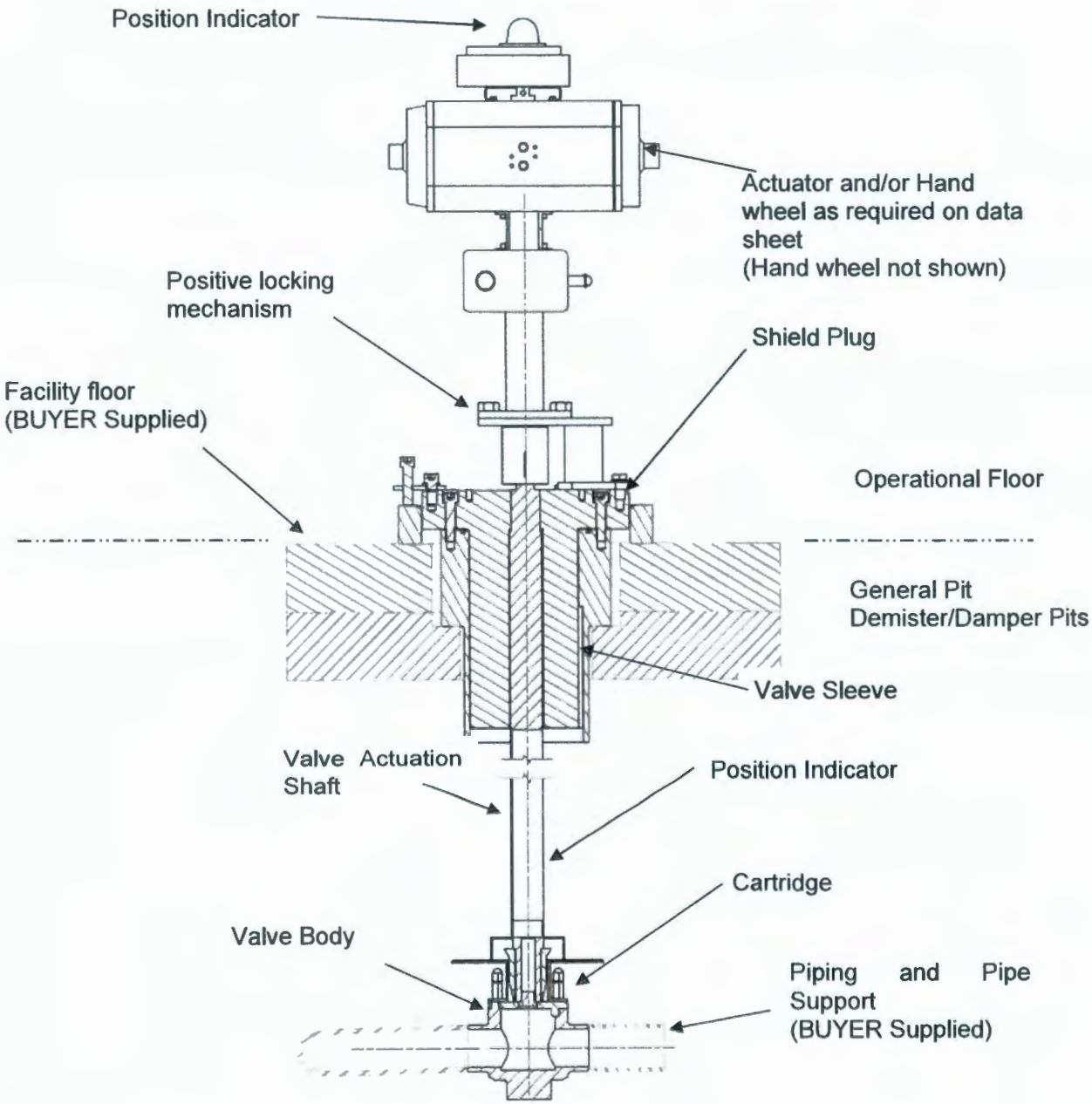

Figure 3-3: Remote Valve Sleeved Assembly Configuration

This configuration is used for valves located in limited access pits
(These valves are below the operational floor and require long reach tools for operation and maintenance)

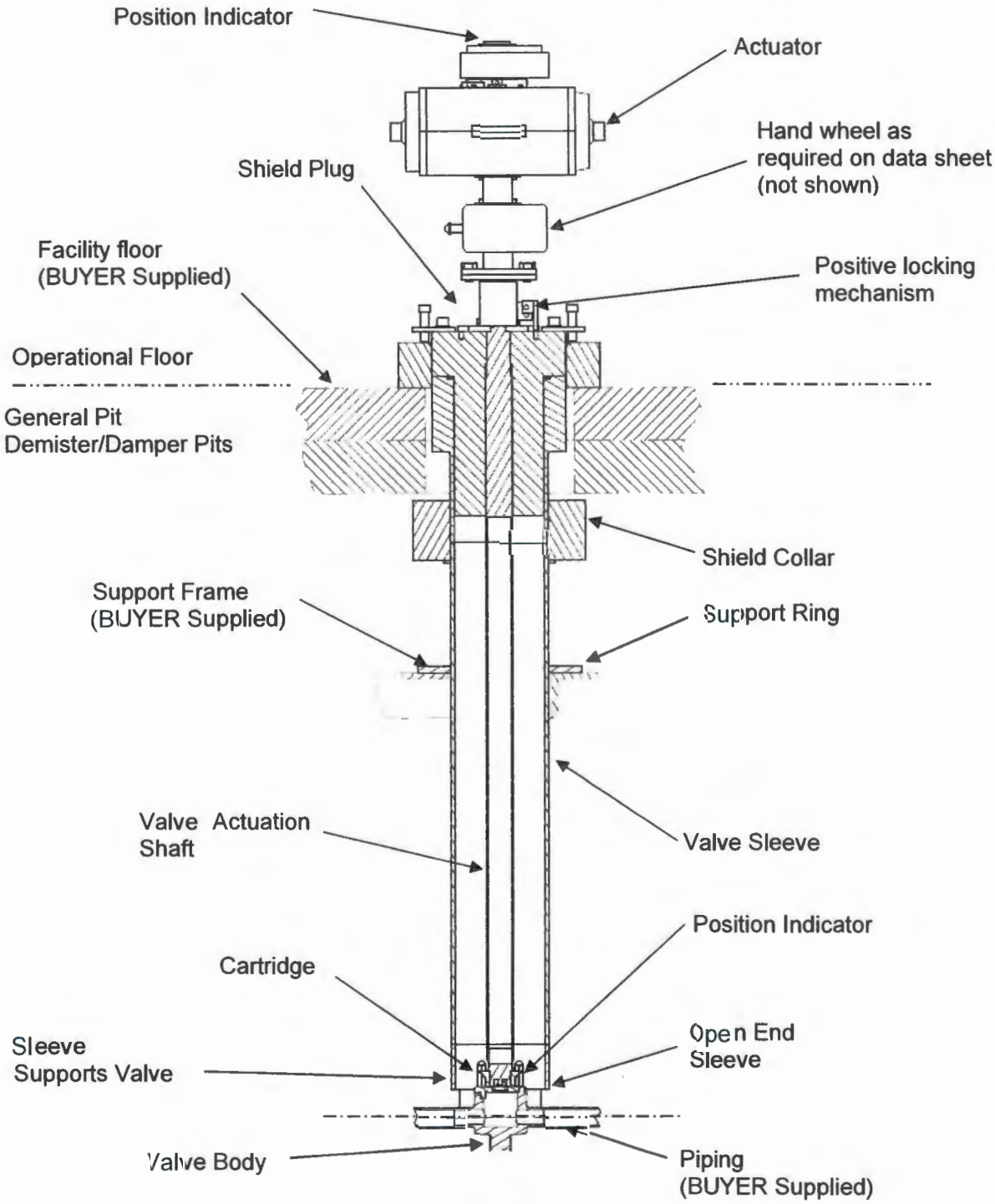

Table 3-1: List of Valve Configurations and Safety Functions

EIN (Tag Number)	Configuration	Type	Safety Function(s) (See Table 3-3)
202LP-CFA-CFF-FV-136	Shaft Assembly	Actuated Control	CONF_SS
202LP-CFA-CFF-FV-183	Shaft Assembly	Actuated Control	CONF_SS
202LP-CFA-CFF-PIT-129	Sleeved Assembly	Pressure Instrument	CONF_SS
202LP-CFA-CFF-VLR-129	Sleeved Assembly	Manual	CONF_SS
202LP-CFA-CFF-XV-139	Shaft Assembly	Actuated W/ Handwheel	CONF_SS
202LP-CFA-CFF-XV-140	Shaft Assembly	Actuated W/ Handwheel	CONF_SS
202LP-CFA-CFF-XV-141	Sleeved Assembly	Actuated	CONF_SS
202LP-CFA-CFF-XV-142	Sleeved Assembly	Actuated	CONF_SS
202LP-CFA-CFF-XV-145	Sleeved Assembly	Actuated	CONF_SS
202LP-CFA-CFF-XV-150	Sleeved Assembly	Actuated Fast Acting	CONF_SS
202LP-CFA-CFF-XV-151	Sleeved Assembly	Actuated Fast Acting	CONF_SS
202LP-CFA-CFF-XV-166	Shaft Assembly	Actuated W/ Handwheel	CONF_SS
202LP-CFA-CFF-XV-167	Sleeved Assembly	Actuated	CONF_SS
202LP-CFA-CFF-XV-169	Shaft Assembly	Actuated W/ Handwheel	CONF_SS
202LP-CFA-CFF-XV-174	Sleeved Assembly	Actuated	CONF_SS
202LP-CFA-CFF-XV-180	Shaft Assembly	Actuated W/ Handwheel	CONF_SS
202LP-CFA-CFF-XV-181	Shaft Assembly	Actuated W/ Handwheel	CONF_SS
202LP-CFA-CFF-XV-182	Shaft Assembly	Actuated W/ Handwheel	CONF_SS
202LP-CFA-UT-VLR-128	Sleeved Assembly	Manual	Non-Safety (ALARA)
202LP-CSA-ECS-PIT-660	Sleeved Assembly	Pressure Instrument	CONF_SS
202LP-CSA-ECS-VLR-467	Sleeved Assembly	Manual	CONF_SS
202LP-CSA-ECS-XV-225	Sleeved Assembly	Actuated	CONF_SS
202LP-CSA-ECS-XV-226	Sleeved Assembly	Actuated	CONF_SS
202LP-CSA-ECS-XV-251	Sleeved Assembly	Actuated	CONF_SS
202LP-CSA-ECS-XV-258	Sleeved Assembly	Actuated	CONF_SS
202LP-CSA-ECS-XV-277	Sleeved Assembly	Actuated	CONF_SS
202LP-CSA-ECS-XV-643	Sleeved Assembly	Actuated	CONF_SS
202LP-CSA-ECS-XV-645	Sleeved Assembly	Actuated	CONF_SS
202LP-CSA-IX-VLR-200	Shaft Assembly	Manual	CONF_SS
202LP-CSA-IX-VLR-201	Shaft Assembly	Manual	CONF_SS
202LP-CSA-IX-VLR-202	Shaft Assembly	Manual	CONF_SS
202LP-CSA-IX-VLR-203	Shaft Assembly	Manual	CONF_SS
202LP-CSA-IX-VLR-204	Sleeved Assembly	Manual	CONF_SS

EIN (Tag Number)	Configuration	Type	Safety Function(s) (See Table 3-3)
202LP-CSA-IX-VLR-205	Sleeved Assembly	Manual	CONF_SS
202LP-CSA-IX-XV-234	Sleeved Assembly	Actuated	CONF_SS
202LP-CSA-IX-XV-287	Sleeved Assembly	Actuated	CONF_SS
202LP-CSA-IX-XV-357	Sleeved Assembly	Actuated	GRS CONF_SS
202LP-CSA-IX-XV-358	Sleeved Assembly	Actuated	GRS CONF_SS
202LP-CSA-IX-XV-359	Sleeved Assembly	Actuated	GRS CONF_SS
202LP-CSA-IX-XV-360	Sleeved Assembly	Actuated	GRS CONF_SS
202LP-CSA-IX-XV-374	Sleeved Assembly	Actuated	GRS CONF_SS
202LP-CSA-IX-XV-375	Sleeved Assembly	Actuated	GRS CONF_SS
202LP-CSA-LAG-VLR-206	Sleeved Assembly	Manual	CONF_SS
202LP-CSA-RS-XV-297	Sleeved Assembly	Actuated	CP-MPS CONF_SS
202LP-CSA-RS-XV-298	Sleeved Assembly	Actuated	CP-MPS CONF_SS
202LP-CSA-RS-XV-299	Sleeved Assembly	Actuated	CP-MPS CONF_SS
202LP-FFA-CFF-PIT-101	Sleeved Assembly	Pressure Instrument	CONF_SS
202LP-FFA-CFF-PV-101	Sleeved Assembly	Actuated Control	CONF_SS
202LP-FFA-CFF-VLR-132	Sleeved Assembly	Manual	CONF_SS
202LP-FFA-CFF-XV-106	Sleeved Assembly	Actuated W/ Handwheel	CONF_SS
202LP-FFA-CFF-XV-109	Sleeved Assembly	Actuated	CONF_SS
202LP-FFA-CFF-XV-115	Sleeved Assembly	Actuated W/ Handwheel	CONF_SS
202LP-FFA-CFF-XV-119	Sleeved Assembly	Actuated	CONF_SS
202LP-FFA-CFF-PIT-142	Sleeved Assembly	Pressure Instrument	CONF_SS
202LP-FFA-CFF-XV-177	Sleeved Assembly	Actuated	CONF_SS
202LP-FFA-ECS-VLR-133	Sleeved Assembly	Manual	CONF_SS
202LP-FFA-RS-XV-111	Sleeved Assembly	Actuated	WF-MPS CONF_SS
202LP-FFA-RS-XV-112	Sleeved Assembly	Actuated	WF-MPS CONF_SS
202LP-FFA-RS-XV-118	Sleeved Assembly	Actuated	WF-MPS CONF_SS
202LP-IXA-IX-PIT-202	Sleeved Assembly	Pressure Instrument	CONF_SS
202LP-IXA-IX-PIT-224	Sleeved Assembly	Pressure Instrument	CONF_SS
202LP-IXA-IX-PIT-241	Sleeved Assembly	Pressure Instrument	CONF_SS

EIN (Tag Number)	Configuration	Type	Safety Function(s) (See Table 3-3)
202LP-IXA-IX-PIT-324	Sleeved Assembly	Pressure Instrument	CONF_SS
202LP-IXA-IX-PIT-325	Sleeved Assembly	Pressure Instrument	GRS CONF_SS
202LP-IXA-IX-PIT-368	Sleeved Assembly	Pressure Instrument	CONF_SS
202LP-IXA-IX-PIT-369	Sleeved Assembly	Pressure Instrument	CONF_SS
202LP-IXA-IX-PV-324	Sleeved Assembly	Actuated Control	CONF_SS
202LP-IXA-IX-PV-367	Sleeved Assembly	Actuated Control	CONF_SS
202LP-IXA-IX-VLR-230	Shaft Assembly	Manual	CONF_SS
202LP-IXA-IX-VLR-242	Shaft Assembly	Manual	CONF_SS
202LP-IXA-IX-VLR-341	Sleeved Assembly	Manual	CONF_SS
202LP-IXA-IX-VLR-347	Shaft Assembly	Manual	CONF_SS
202LP-IXA-IX-XV-086	Sleeved Assembly	Actuated	GRS CONF_SS
202LP-IXA-IX-XV-087	Sleeved Assembly	Actuated	GRS CONF_SS
202LP-IXA-IX-XV-203	Sleeved Assembly	Actuated	CONF_SS
202LP-IXA-IX-XV-204	Sleeved Assembly	Actuated	CONF_SS
202LP-IXA-IX-XV-206	Sleeved Assembly	Actuated	CONF_SS
202LP-IXA-IX-XV-209	Sleeved Assembly	Actuated	CONF_SS
202LP-IXA-IX-XV-214	Sleeved Assembly	Actuated	CONF_SS
202LP-IXA-IX-XV-235	Sleeved Assembly	Actuated	CONF_SS
202LP-IXA-IX-XV-238	Sleeved Assembly	Actuated	CONF_SS
202LP-IXA-IX-XV-240	Sleeved Assembly	Actuated	CONF_SS
202LP-IXA-IX-XV-252	Sleeved Assembly	Actuated	CONF_SS
202LP-IXA-IX-XV-262	Sleeved Assembly	Actuated	CONF_SS
202LP-IXA-IX-XV-301	Sleeved Assembly	Actuated	CONF_SS
202LP-IXA-IX-XV-307	Sleeved Assembly	Actuated	CONF_SS
202LP-IXA-IX-XV-316	Sleeved Assembly	Actuated	CONF_SS
202LP-IXA-IX-XV-330	Sleeved Assembly	Actuated	CONF_SS
202LP-IXA-RH-XV-335	Sleeved Assembly	Actuated	CONF_SS
202LP-IXA-IX-XV-337	Sleeved Assembly	Actuated	CONF_SS
202LP-IXA-IX-XV-338	Sleeved Assembly	Actuated	CONF_SS
202LP-IXA-IX-XV-361	Sleeved Assembly	Actuated	GRS CONF_SS
202LP-IXA-IX-XV-362	Sleeved Assembly	Actuated	GRS CONF_SS
202LP-IXA-IX-XV-363	Sleeved Assembly	Actuated	GRS CONF_SS

EIN (Tag Number)	Configuration	Type	Safety Function(s) (See Table 3-3)
202LP-IXA-IX-XV-364	Sleeved Assembly	Actuated	GRS CONF_SS
202LP-IXA-IX-XV-365	Sleeved Assembly	Actuated	CONF_SS
202LP-IXA-LAG-XV-310	Sleeved Assembly	Actuated	CONF_SS
202LP-IXA-LAG-XV-311	Sleeved Assembly	Actuated	CONF_SS
202LP-IXA-LAG-XV-312	Sleeved Assembly	Actuated	CONF_SS
202LP-IXA-RH-XV-212	Sleeved Assembly	Actuated	CONF_SS
202LP-IXA-RH-XV-213	Sleeved Assembly	Actuated	CONF_SS
202LP-IXA-RH-XV-237	Sleeved Assembly	Actuated	PP-MPS CONF_SS
202LP-IXA-RH-XV-245	Sleeved Assembly	Actuated	CONF_SS
202LP-IXA-RH-XV-246	Sleeved Assembly	Actuated	CONF_SS
202LP-IXA-RH-XV-247	Sleeved Assembly	Actuated	PP-MPS CONF_SS
202LP-IXA-RH-XV-341	Sleeved Assembly	Actuated	PP-MPS CONF_SS
202LP-IXA-RH-XV-342	Sleeved Assembly	Actuated	PP-MPS CONF_SS
202LP-IXA-RH-XV-343	Sleeved Assembly	Actuated	PP-MPS CONF_SS
202LP-IXA-RH-XV-376	Sleeved Assembly	Actuated	PP-MPS CONF_SS
202LP-IXA-RS-VLR-159	Sleeved Assembly	Manual	CONF_SS
202LP-IXA-RS-XV-249	Sleeved Assembly	Actuated	PP-MPS CONF_SS
202LP-IXA-RS-XV-261	Sleeved Assembly	Actuated	PP-MPS CONF_SS
202LP-IXA-RS-XV-271	Sleeved Assembly	Actuated	PP-MPS CONF_SS
202LP-LSA-ECS-XV-318	Std Cartridge Plug	Actuated	CONF_SS
202LP-LSA-ECS-XV-319	Std Cartridge Plug	Actuated	CONF_SS
202LP-LSA-ECS-XV-320	Std Cartridge Plug	Actuated	CONF_SS
202LP-LSA-ECS-XV-378	Std Cartridge Plug	Actuated	CONF_SS
202LP-LSA-ECS-XV-379	Std Cartridge Plug	Actuated	CONF_SS
202LP-LSA-ECS-XV-380	Std Cartridge Plug	Actuated	CONF_SS
202LP-LSA-LAG-FV-697	Std Cartridge Plug	Actuated Control	CONF_SS
202LP-LSA-LAG-VLV-1961	Std Cartridge Plug	Manual	CONF_SS
202LP-LSA-LAG-XV-611	Std Cartridge Plug	Actuated	CONF_SS
202LP-LSA-LAG-XV-613	Std Cartridge Plug	Actuated	CONF_SS

EIN (Tag Number)	Configuration	Type	Safety Function(s) (See Table 3-3)
202LP-LSA-LAG-XV-614	Std Cartridge Plug	Actuated	CONF_SS
202LP-LSA-LAG-XV-616	Std Cartridge Plug	Actuated	PP-MPS LS-MPS CONF_SS
202LP-LSA-LAG-XV-618	Std Cartridge Plug	Actuated	CONF_SS
202LP-LSA-LAG-XV-619	Std Cartridge Plug	Actuated	CONF_SS
202LP-LSA-LAG-XV-621	Std Cartridge Plug	Actuated	PP-MPS LS-MPS CONF_SS
202LP-LSA-LAG-XV-623	Std Cartridge Plug	Actuated	CONF_SS
202LP-LSA-LAG-XV-624	Std Cartridge Plug	Actuated	CONF_SS
202LP-LSA-LAG-XV-627	Std Cartridge Plug	Actuated	CONF_SS
202LP-LSA-LAG-XV-628	Std Cartridge Plug	Actuated	CONF_SS
202LP-LSA-LAG-XV-630	Std Cartridge Plug	Actuated	CONF_SS
202LP-LSA-LAG-XV-631	Std Cartridge Plug	Actuated	CONF_SS
202LP-LSA-LAG-XV-632	Std Cartridge Plug	Actuated	CONF_SS
202LP-LSA-LAG-XV-633	Std Cartridge Plug	Actuated	CONF_SS
202LP-LSA-LAG-XV-634	Std Cartridge Plug	Actuated	CONF_SS
202LP-LSA-LAG-XV-635	Std Cartridge Plug	Actuated	CONF_SS
202LP-LSA-LAG-XV-640	Std Cartridge Plug	Actuated	CONF_SS
202LP-LSA-LAG-XV-644	Std Cartridge Plug	Actuated	CONF_SS
202LP-LSA-LAG-XV-650	Std Cartridge Plug	Actuated	CONF_SS
202LP-LSA-LAG-XV-651	Std Cartridge Plug	Actuated	CONF_SS
202LP-LSA-LAG-XV-654	Std Cartridge Plug	Actuated	CONF_SS
202LP-LSA-LAG-XV-665	Std Cartridge Plug	Actuated	CONF_SS
202LP-LSA-LAG-XV-678	Std Cartridge Plug	Actuated	CONF_SS
202LP-LSA-LAG-XV-694	Std Cartridge Plug	Actuated	CONF_SS
202LP-LSA-LAG-XV-695	Std Cartridge Plug	Actuated	PP-MPS LS-MPS CONF_SS
202LP-LSA-LAG-XV-696	Std Cartridge Plug	Actuated	CONF_SS
202LP-LSA-RS-XV-629	Std Cartridge Plug	Actuated	TW-MPS CONF_SS
202LP-LSA-RS-XV-646	Std Cartridge Plug	Actuated	TW-MPS CONF_SS
202LP-LSA-RS-XV-649	Std Cartridge Plug	Actuated	TW-MPS CONF_SS
202LP-SRA-RH-XV-415	Std Cartridge Plug	Actuated	Non-Safety (ALARA)
202LP-VE-PVV-XV-949	Sleeved Assembly	Actuated	STES

EIN (Tag Number)	Configuration	Type	Safety Function(s) (See Table 3-3)
202LP-VE-PVV-XV-950	Sleeved Assembly	Actuated	STES

Table 3-2 Flow Pattern and Body Type for 3-Way Valves

EIN (Tag Number)	3-way body Type	Flow Pattern (Type)
202LP-CFA-CFF-VLR-129	Bottom Port	D
202LP-CFA-UT-VLR-128	Bottom Port	D
202LP-CSA-ECS-XV-225	Bottom Port	B
202LP-CSA-ECS-XV-226	Bottom Port	B

Figure 3-4 3-Way Valve Flow Patterns

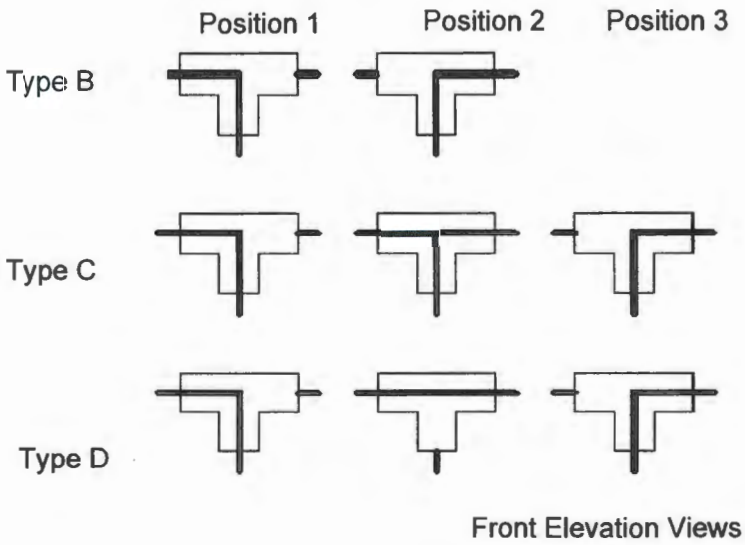

The following is a list of all drawings and data sheets associated with this specification:

PIPING AND INSTRUMENT DIAGRAMS (P&ID)

H-16-000003 Sh 2	P&ID INSTRUMENT SYMBOLS

DESIGN PROPOSAL DRAWINGS:

H-16-001900 Sh 1	LAWPS REMOTE VALVE SLEEVED ASSEMBLY DPD
H-16-001900 Sh 2	LAWPS REMOTE VALVE SLEEVED ASSEMBLY DPD
H-16-001901 Sh 1	LAWPS REMOTE VALVE SHAFT ASSEMBLY DPD
H-16-001902 Sh 1	LAWPS 202LP-CFA-CFF-PV-101 VALVE DPD
H-16-001903 Sh 1	LAWPS REMOTE PIT SLEEVED ASSEMBLY DPD

CROSS FLOW FILTER AREA SPECIALTY VALVE DATA SHEETS:

EIN (Tag Number)
202LP-CFA-CFF-FV-136
202LP-CFA-CFF-FV-183
202LP-CFA-CFF-VLR-129
202LP-CFA-CFF-XV-139
202LP-CFA-CFF-XV-140
202LP-CFA-CFF-XV-141
202LP-CFA-CFF-XV-142
202LP-CFA-CFF-XV-145
202LP-CFA-CFF-XV-150
202LP-CFA-CFF-XV-151
202LP-CFA-CFF-XV-166
202LP-CFA-CFF-XV-167
202LP-CFA-CFF-XV-169
202LP-CFA-CFF-XV-174
202LP-CFA-CFF-XV-180
202LP-CFA-CFF-XV-181
202LP-CFA-CFF-XV-182
202LP-CFA-UT-VLR-128

Cs PRODUCT TANK AREA SPECIALTY VALVE DATA SHEETS:

EIN (Tag Number)
202LP-CSA-ECS-VLR-467
202LP-CSA-ECS-XV-225
202LP-CSA-ECS-XV-226
202LP-CSA-ECS-XV-251
202LP-CSA-ECS-XV-258
202LP-CSA-ECS-XV-277
202LP-CSA-ECS-XV-643

202LP-CSA-ECS-XV-645
202LP-CSA-IX-VLR-200
202LP-CSA-IX-VLR-201
202LP-CSA-IX-VLR-202
202LP-CSA-IX-VLR-203
202LP-CSA-IX-VLR-204
202LP-CSA-IX-VLR-205
202LP-CSA-IX-XV-234
202LP-CSA-IX-XV-287
202LP-CSA-IX-XV-357
202LP-CSA-IX-XV-358
202LP-CSA-IX-XV-359
202LP-CSA-IX-XV-360
202LP-CSA-IX-XV-374
202LP-CSA-IX-XV-375
202LP-CSA-LAG-VLR-206
202LP-CSA-RS-XV-297
202LP-CSA-RS-XV-298
202LP-CSA-RS-XV-299

FILTER FEED TANK AREA SPECIALTY VALVE DATA SHEETS:

EIN (Tag Number)
202LP-FFA-CFF-PV-101
202LP-FFA-CFF-VLR-132
202LP-FFA-CFF-XV-106
202LP-FFA-CFF-XV-109
202LP-FFA-CFF-XV-115
202LP-FFA-CFF-XV-119
202LP-FFA-CFF-XV-177
202LP-FFA-ECS-VLR-133
202LP-FFA-RS-XV-111
202LP-FFA-RS-XV-112
202LP-FFA-RS-XV-118

ION EXCHANGE AREA SPECIALTY VALVE DATA SHEETS:

EIN (Tag Number)
202LP-IXA-IX-PV-324
202LP-IXA-IX-PV-367
202LP-IXA-IX-VLR-230
202LP-IXA-IX-VLR-242
202LP-IXA-IX-VLR-341
202LP-IXA-IX-VLR-347
202LP-IXA-IX-XV-086
202LP-IXA-IX-XV-087
202LP-IXA-IX-XV-203
202LP-IXA-IX-XV-204
202LP-IXA-IX-XV-206

202LP-IXA-IX-XV-209
202LP-IXA-IX-XV-214
202LP-IXA-IX-XV-235
202LP-IXA-IX-XV-238
202LP-IXA-IX-XV-240
202LP-IXA-IX-XV-252
202LP-IXA-IX-XV-262
202LP-IXA-IX-XV-301
202LP-IXA-IX-XV-307
202LP-IXA-IX-XV-316
202LP-IXA-IX-XV-330
202LP-IXA-RH-XV-335
202LP-IXA-IX-XV-337
202LP-IXA-IX-XV-338
202LP-IXA-IX-XV-361
202LP-IXA-IX-XV-362
202LP-IXA-IX-XV-363
202LP-IXA-IX-XV-364
202LP-IXA-IX-XV-365
202LP-IXA-LAG-XV-310
202LP-IXA-LAG-XV-311
202LP-IXA-LAG-XV-312
202LP-IXA-RH-XV-212
202LP-IXA-RH-XV-213
202LP-IXA-RH-XV-237
202LP-IXA-RH-XV-245
202LP-IXA-RH-XV-246
202LP-IXA-RH-XV-247
202LP-IXA-RH-XV-341
202LP-IXA-RH-XV-342
202LP-IXA-RH-XV-343
202LP-IXA-RH-XV-376
202LP-IXA-RS-VLR-159
202LP-IXA-RS-XV-249
202LP-IXA-RS-XV-261
202LP-IXA-RS-XV-271

LAG STORAGE AREA SPECIALTY VALVE DATA SHEETS:

EIN (Tag Number)
202LP-LSA-ECS-XV-318
202LP-LSA-ECS-XV-319
202LP-LSA-ECS-XV-320
202LP-LSA-ECS-XV-378
202LP-LSA-ECS-XV-379
202LP-LSA-ECS-XV-380
202LP-LSA-LAG-FV-697
202LP-LSA-LAG-VLV-1961
202LP-LSA-LAG-XV-611

202LP-LSA-LAG-XV-613
202LP-LSA-LAG-XV-614
202LP-LSA-LAG-XV-616
202LP-LSA-LAG-XV-618
202LP-LSA-LAG-XV-619
202LP-LSA-LAG-XV-621
202LP-LSA-LAG-XV-623
202LP-LSA-LAG-XV-624
202LP-LSA-LAG-XV-627
202LP-LSA-LAG-XV-628
202LP-LSA-LAG-XV-630
202LP-LSA-LAG-XV-631
202LP-LSA-LAG-XV-632
202LP-LSA-LAG-XV-633
202LP-LSA-LAG-XV-634
202LP-LSA-LAG-XV-635
202LP-LSA-LAG-XV-640
202LP-LSA-LAG-XV-644
202LP-LSA-LAG-XV-650
202LP-LSA-LAG-XV-651
202LP-LSA-LAG-XV-654
202LP-LSA-LAG-XV-665
202LP-LSA-LAG-XV-678
202LP-LSA-LAG-XV-694
202LP-LSA-LAG-XV-695
202LP-LSA-LAG-XV-696
202LP-LSA-RS-XV-629
202LP-LSA-RS-XV-646
202LP-LSA-RS-XV-649

SPENT RESIN AREA SPECIALTY VALVE DATA SHEETS:

EIN (Tag Number)
202LP-SRA-RH-XV-415

VENTILATION VALVE DATA SHEETS

EIN (Tag Number)
202LP-VE-PVV-XV-949
202LP-VE-PVV-XV-950

PRESSURE INSTRUMENTS

EIN (Tag Number)
202LP-CFA-CFF-PIT-129
202LP-CSA-ECS-PIT-660
202LP-FFA-CFF-PIT-101
202LP-FFA-CFF-PIT-142
202LP-IXA-IX-PIT-202

202LP-IXA-IX-PIT-224
202LP-IXA-IX-PIT-241
202LP-IXA-IX-PIT-324
202LP-IXA-IX-PIT-325
202LP-IXA-IX-PIT-368
202LP-IXA-IX-PIT-369

3.1.1 Interface Definition

Physical interfaces are as identified in DPD drawings and in Figures 3-1, 3-2, and 3-3.

Facility instrument air for valve actuation is as defined below:

- Nominal unregulated instrument air operating pressure range: 110 to 120 psig. Refer to data sheets for bounding instrument air pressure range including upset conditions.
- Upset unregulated instrument air operating pressure range: 80 to 150 psig.
- Maximum Operating temperature: 135 °F
- Instrument Air Dewpoint: -40 °F

3.2 Requirements

3.2.1 Safety Requirements

The functional requirements, performance criteria, and design bases are defined on associated data sheets and DPDs identified in Section 3.1. The safety designations and design requirements identified herein and, on the applicable data sheets have been flowed down from BUYER safety documentation and are separated into equipment type for safety performance criteria. The quality designations are also defined on the associated BUYER supplied DPDs:

- Table 3-1 identifies the applicable safety function for each individual valve. A particular valve may have multiple safety functions. Table 3-3 identifies the applicable quality level and seismic category for individual valve components based on the specific valve's safety function.
- Table 3-3 defines the high level safety functions for the valves. Individual components that contribute to these safety functions shall have the same quality level. The VENDOR shall assign quality levels (e.g. FQA, EQA, and or CQA) to each part of the valve and document as part of the appropriate drawing parts list. Refer to Section 3.3.9.3.3 N.

Table 3-3 Safety Functions of Process Valve Subassemblies/Components

Safety Function	Applicable Valve Components	Quality Level	NPH / Limit State
CONF_SS	• valve bodies and instrument bodies • Cover, cover fasteners • Valve seals for process fluid pressure boundary. (unless noted on data sheet)	FQA	SDC-3 / Limit State D
CONF_SS	• All structural components (incl. fasteners) supporting any FQA components	FQA	SDC-3 / Limit State C
STES	• Valve body • Cover, cover fasteners • Valve seals for process fluid pressure boundary	FQA	SDC-2 / Limit State D
GRS	• Valve plug, stem and seals • Valve Positioners, Solenoid Valves and Actuator • Remotely automated Valve Stem extensions including connection to actuator	FQA	SDC-2 / Limit State D
PP-MPS	• Valve plugs, stem and seals • Valve Positioners, Solenoid Valves and Actuator • Remotely automated Valve Stem extensions including connection to actuator	FQA	SDC-1 / Limit State C
TW-MPS	• Valve plugs, stem and seals • Valve Positioners, Solenoid Valves and Actuator • Remotely automated Valve Stem extensions including connection to actuator	FQA	SDC-1 / Limit State C
WF-MPS	• Valve plugs, stem and seals • Valve Positioners, Solenoid Valves and Actuator • Remotely automated Valve Stem extensions including connection to actuator	FQA	SDC-1 / Limit State C
CP-MPS	• Valve plugs, stem and seals • Valve Positioners, Solenoid Valves and Actuator • Remotely automated Valve Stem extensions including connection to actuator	FQA	SDC-1 / Limit State C
LS-MPS	• Valve plugs, stem and seals • Valve Positioners, Solenoid Valves and Actuator • Remotely automated Valve Stem extensions including connection to actuator	FQA	SDC-1 / Limit State C
Non-Safety (ALARA)	• Valve body • Cover, cover fasteners • Valve seals for process fluid pressure boundary	EQA	SDC-2/ Limit State D
Applicable to all safety functions unless otherwise specified by a specific assigned safety function	• Any structural components (incl. fasteners) supporting any EQA components if not already identified as FQA e.g. actuator mounting hardware	EQA	SDC-2 / Limit State C
Applicable to all safety functions unless otherwise specified by a specific assigned safety function	• All valve shield plugs • Remotely automated Valve positioner and actuator if not already identified as FQA. (for valves without designated safety requirement) • Valve wheel/handle • valve stem extensions if not identified as FQA • All other valve components not identified as FQA or EQA including manual	CQA	N/A

NOTE 1 – Safety Function basis is per RPP-RPT-58553
NOTE 2 – Refer to Table 3-1 for the applicable safety function(s) of each individual valve.

3.2.2 Functional Requirements

Functional testing of the valves shall be in accordance with Section 4.6.3.

The equipment shall meet the following functional requirements:

3.2.2.1 General Functional Requirements

The following requirements apply to all valves.

A. Plug valves shall be designed to API 599 and ASME B16.34.

B. Plug valves shall meet the requirements of ASME B31.3 for Normal Fluid Service.

C. Valve seat leakage within the limits of API 598.

D. Does not retain solids in crevices that could otherwise cause the valve to leak when closed.

E. When specified on the applicable data sheet, valve actuator components and functions shall be certified to IEC 61508.

F. When specified on the applicable data sheet, valves shall be provided with SIL Certification from a third party. Data sheets specify the required SIL level.

G. When specified on the applicable data sheet, valve functions shall be provided with Failure Mode, Effect, and Diagnostic Analysis (FMEDA) documentation.

H. Valve instrumentation shall be provided with Certification of Calibration. Calibration records shall be submitted in accordance with Quality Assurance (QA) clause B61.

I. Valve positioners, solenoids and junction boxes shall be provided to NEMA levels specified on the applicable data sheets.

J. Valves shall have visual position indicators indicating valve position.

K. Valves shall have the provision to be mechanically locked in the open and closed positions. Locking mechanism shall be on the valve actuation shaft. Locking mechanism shall be above the facility floor, see Figure 3-1, Figure 3-2 and Figure 3-3.

L. For process conditions applicable to control valves such as flow rates and operating pressures and temperatures, refer to the data sheets.

M. As applicable, valves shall be compatible with fluids having the estimated physical properties specified on the data sheets.

N. Non-maintainable parts, e.g. components that are permanently welded in position shall have a minimum operating life of 40 years based on normal expected physical and radiological conditions.

O. Valve bodies should be designed to accept an inner module that contains a pressure instrument in lieu of a valve plug. All valve bodies should be capable of accepting a valve plug inner module, or an instrumentation inner module.

P. A corrosion-erosion allowance shall be used for all pressure boundary material in contact with waste streams.
An allowance of .063in shall be used for the following valves

- 202LP-FFA-CFF-PV-101
- 202LP-FFA-CFF-XV-177
- 202LP-FFA-CFF-XV-109

All other valves shall have a corrosion-erosion allowance of .040in.

Q. Select automated valves shall be equipped with speed control for adjusting the valve closure times. Valves that require speed control are identified on the applicable BUYER supplied data sheets.

3.2.2.2 Functional Requirements Specific to Valves Installed in Pits

The following requirements apply to only valves installed in pits.

A. Valves located in limited access areas shall have shielded top entry configuration for maintenance access.

B. Valve safety instrumented positioners shall be located on the valve actuation shaft and not on the actuator. Positioners shall be located above the facility floor, see Figure 3-2 and Figure 3-3.

C. Valve assemblies shall allow for associated process piping thermal expansion. Refer to Section 3.2.7 for ambient temperatures.

3.2.3 Physical Requirements

3.2.3.1 General Physical Requirements

The following requirements apply to all valves.

A. For the specialty valve configuration, refer to the DPDs supplied with this specification. Dimensional tolerances and physical interfaces are defined in the BUYER supplied DPDs.

B. The valve body shall be of butt-weld end design in either forged or cast material. Butt-weld ends shall be beveled in accordance with the applicable Figure No. 2a or 3a of ASME B16.25 and bored to match the pipe schedule specified on the data sheet.

C. There shall be minimal internal cavities where solids or particles can accumulate.

D. Valves shall allow the free draining of piping while in the open position. There shall be no abrupt transitions that can trap liquid.

E. Valves shall be regular port design, unless otherwise specified on the valve data sheets.

F. Number of ports and configuration are specified on the valve data sheets and in Table 3-2.

G. Two-way valves shall be designed to close in the clockwise direction.

H. Valves identified on the applicable data sheet as having both an actuator and manual hand-wheel, shall be fitted for a manually operated mechanism that permits disengagement of the actuator to enable manual operation of the valve in the event of power failure. The mechanism shall be designed to operate from a

position external to the shielding, i.e. above the facility floor, see Figure 3-2 and Figure 3-3.

I. Valves shall limit the amount of valve travel with physical hard stops located on the body. Hard stop locations shall provide valve position within the over- or under-travel limits of the valve. Location of valve hard stops shall be determined by VENDOR. VENDOR shall ensure over travel will not damage the valve.

J. Valve Mechanical Loading: The VENDOR shall design the valve components including support ring-and welds (see Figure 3-3) to meet the seismic qualifications as required by the method(s) defined in Section 3.3.15.1.3, as applicable.

K. All valves will be installed with the axis of flow in the horizontal position, with the external structure oriented vertically on top of the valve centerline. Valves shall be bi-directional.

L. Rotating component supports, bearings, thrust collars, bolts, nuts, and other threaded components shall be manufactured from materials to prevent galling or binding.

M. In addition to indicators on the valve actuators, all valves shall have visual position indicators fitted directly to the valve stem (i.e., at the valve body and the spindle top).

N. Actuator position switches and indicator shall accurately indicate when the valve plug is positioned fully open and closed, accounting for the expected torsional deflection in the actuator shaft.

O. Valves shall contain features to allow field alignment with interfaces in the X, Y, and Z directions to accommodate construction tolerances.

P. The potential for over torqueing of manual valves shall be addressed. This can be through design features, or by imposing torque limits through administrative means (i.e. operations and maintenance manual)

3.2.3.2 Physical Requirements Specific to Valves Installed in Pits.

The following requirements only apply to valves installed in pits.

A. Due to the extended length and weight of the valve assembly, attachment points shall be designed into sleeved valve assemblies. The design shall include a support ring as part of the valve sleeve for supporting the valve to a structural member. This will reduce the load/stress imparted on the process piping.

B. The support ring (see Figure 3-3) design for sleeved valve assemblies shall be as identified on the DPD drawings.

C. The valve inner assembly for sleeved assemblies will consist of the valve inner module (plug, cage, sleeve, seals and cover), and valve actuation shaft to turn the plug stem, shield plug with associated fasteners and seals.

D. The valve design shall include suitable (radiological resistant) air seals between the actuation shaft and shield plug system as well as between the shield plug and facility floor, in accordance with Section 3.3.2.

E. The VENDOR shall allow for gap/tolerance for vertical movement of the shaft and provide flexibility and qualify the maximum displacements of the valve. VENDOR

shall clearly identify how axial / angular / lateral misalignments between the valve stem and the actuator can be accommodated, and the maximum allowable misalignments that can be tolerated without adversely affecting valve / actuator functionality. Refer to Section 3.2.7 for ambient temperatures.

F. Components penetrating the shielding shall be stepped or provided with shield blocks to eliminate radiation shine. Thickness of the shielding shall be no less than the thickness of the cover plates through which the valve shaft passes.

G. The valve actuation shaft shall be supplied with a tapped hole to allow an eye to be inserted to accept a remote handling/withdrawal device.

H. A removable threaded plug (or inspection port) shall be provided in the top of the shield plug of sleeved valve and shaft valve assemblies for insertion of a borescope in order to view the position indicator located directly on the valve stem. Inspection port should be able to accommodate up to an 8mm borescope. BUYER shall work with VENDOR on the size and location of the inspection port.

I. All valves located in pits shall have a secondary position indicator mounted above the shield plug that is viewable without the removal of shielding components.

J. All valves located in pits shall have provisions to inspect for stem leakage. This can be accomplished by remote inspection of the stem, or by inspecting for signs of leakage at the base of the valve sleeve.

K. The plug design for all valves of the Sleeved Configuration (see Figure 3-3) shall allow for removal of the facility shield plates (operating floor plates) without removal of the shield plug from the valve.

3.2.4 Reliability

A. To support the facility 40 year performance lifetime and to meet plant availability targets, selection of components shall be based on component reliability in order to minimize the maintenance frequency, e.g. Mean Time Between Failures (MTBF) shall be maximized.

B. Materials, parts and subcomponents shall be appropriately selected, and when required tested to ensure reliable operation during normal operating conditions and off-normal events as identified herein.

3.2.5 Availability

Valve assemblies (including actuators, accessories and subcomponents) shall have a combined failure rate of .0007 or better.

3.2.6 Maintainability

The specialty valve maintainability characteristics include, but are not limited to, the following:

A. Maintenance and Repair Cycles.

Valves are designed for a 40 year life. Repair by direct replacement is limited to all items that are not permanently attached to process piping or plant structural steel work.

B. Spare Parts

VENDOR shall provide recommended spare parts list to support a 40 year facility design life.

C. Service and Access

All valve actuators regardless of valve configuration (see Figure 3-1, Figure 3-2, and Figure 3-3) will be located above the shielding on the operational floor and are accessible for "hands on maintenance."

All valves in the Standard Cartridge Plug Valve Configuration (See Figure 3-1) will either be close coupled or located in areas where they are accessible for "hands on maintenance."

For Valves in the Remote Valve Shaft Assembly (Figure 3-2,) and Remote Valve Sleeved Assembly configuration (Figure 3-3), the following major components will be located below the shielding:

- valve body, cover and cover fasteners
- valve cartridge
- local valve position indicator
- shield collar and support ring
- valve actuation shaft

The specialty valves shall be designed for remote service. Design features shall provide capability for complete inner module removal and replacement when fully drained. Any special tools that are required shall be specified and supplied by the VENDOR.

3.2.7 Environment

The valves are located in shielded and ventilated concrete pits or weather enclosures and not subject to outdoor environmental conditions during operations. The valves are not subject to outdoor environmental conditions other than for delivery and temporary storage (assume outdoor storage up to 1 year). Site storage conditions shall be considered as they may exceed normal operating conditions.

Delivery/Outdoor environmental conditions are provided for information:

Temperature range: -25°F to 115°F (direct sunlight)
Relative humidity: 0 to 100%.

Valves located in Pits will be exposed to two air temperature ranges. The valve body and all components below the operational floor will be exposed to the general pit conditions. Actuators and all components located above the operational floor will be exposed to Operational Floor Conditions.

Refer to BUYER supplied Data Sheets, Figure 3-1, Figure 3-2, Figure 3-3 and Table 3-4.

The bounding air temperatures given below are temperatures that are expected in the event of a system HVAC outage. Valves will need to be fully functional in the event of an HVAC outage. These temperatures are provided below as ambient air design temperatures for the valves. Values given below are preliminary and need to be verified once they are finalized.

Bounding General Pit Conditions (HVAC Outage)

Air Temperature range: 34°F to 111°F
Relative humidity: 0 to 100%.

Bounding Conditions on Operational Floor Above Pits (HVAC Outage)

Air Temperature range: 28°F to 125°F
Relative humidity: 0 to 100%.

Nominal Conditions on Operational Floor Above Pits (HVAC Operational)

Air Temperature range: 68°F to 100°F
Relative humidity: 0 to 100%.

Nominal operating ambient air temperatures are provided for each valve on the BUYER supplied data sheets.

Fluid design pressures and temperatures for the valves are provided for each valve on the BUYER supplied data sheets.

Table 3-4 Valve Location by Area

Area	Area Code	Valve Location
Cross Flow Filter Area	CFA	General Pit
Cs Product Tank Area	CSA	General Pit
Filter Feed Tank Area	FFA	General Pit
Ion Exchange Area	IXA	General Pit
Lag Storage Area	LSA	Operational Floor Conditions
Spent Resin Area	SRA	Operational Floor Conditions
Ventilation	VE	General Pit

Note: The area code is a two to three letter group following the 202LP prefix of the valve EIN. e.g., 202LP-**CSA**-ECS-VLR-467

3.3 Design and Construction

The specialty valves shall be designed and constructed per the requirements of this specification, cited Codes and Standards, and associated drawings and data sheets.

3.3.1 Parts/Materials/Processes

Certified Material Test Reports (CMTR) are required for all materials used in FQA and EQA items including weld filler material, and fasteners. Certified material test reports and chemical analysis data are also required for any thermoplastic materials used in valve construction that contribute to maintaining confinement. For non-primary pressure retaining or structural materials, a Certificate of Conformance (C of C) is acceptable.

3.3.1.1 The data sheets specify the, the design pressure, design temperature, pipe schedule, end connection, and size, type of valve, and accessories for each type of valve.

3.3.1.2 Materials shall be as specified on DSs or DPDs.

3.3.1.3 Forgings are preferred over castings for the primary pressure retaining valve components such as the valve bodies. The use of castings will require BUYER approval through the RFI process.

3.3.1.4 Material standard editions dated within the previous 10 years from the date of Subcontract award are permissible with BUYER approval as long as VENDOR verifies that physical and chemical properties of material meet the requirements of the cited standard editions.

3.3.1.5 Material substitutions shall not be made without BUYER approval. Unless otherwise stated by the VENDOR in the substitution-related RFI, a substitution request constitutes a representation that the VENDOR:

A. Has investigated the proposed product or material and determined that it meets or exceeds the form, fit, function, and quality level of the specified product; and

B. Will provide the same warranty for the substitution as for the specified product, and the predicted life-span will be greater to or equal to that of the specified produced.

3.3.1.6 All materials and items used in the construction of the valves shall be identified and traceable in accordance with QA clauses B32 and B37.

3.3.1.7 Body, plug, cage, actuation shaft, valve sleeve and cover shall be fabricated from 316/316L series stainless steel.

3.3.1.8 Valve cage and seat materials shall be Ultra High Molecular Weight Polyethylene (UHMWPE). Ethylene Propylene Diene Terpolymer (EPDM) per Parker E0740-75 or equivalent with BUYER approval through the RFI process shall be used for static seals, seals in the shield plug and seals in the actuators. PTFE shall not be used.

3.3.1.9 For non-metallic components that come into contact with waste (including nitrates/nitrites), the VENDOR shall provide confirmation and/or operational data on chemical resistance. VENDOR shall provide cure date documentation for the material, and a sample from each batch, to be tested by the BUYER.

3.3.1.10 Austenitic stainless steel material in contact with process liquids shall exhibit no chromium carbides or detrimental intermetallic phases as demonstrated by testing and accepting a minimum of one specimen per heat treatment lot in accordance with ASTM A262, Practice A.

3.3.1.11 All valves shall be new and shall not contain any asbestos materials (e.g., bonnet gaskets, stem packing, etc.) or incompatible materials subject to radiation deterioration.

3.3.1.12 Shielding material and thickness (top plate and plug) will be specified on the DPDs. A standard/common shield plug design will be required for all valve sizes to interface with facility floor i.e., where the extension shaft penetrates the confinement boundary. BUYER will provide interface details and available working envelope for shield plug design

3.3.1.13 Attachment point of spiders, braces, or other temporary attachments shall match the material of the item it is in contact with or attaching to.

3.3.1.14 Austenitic stainless steel (P-No. 8) welding materials for pressure boundary and load bearing welds shall contain a minimum delta ferrite content of five percent. The maximum ferrite content shall not exceed 12 % for post weld heat treatment (PWHT) applications. Compliance with the minimum and maximum ferrite requirements may be based upon the certified chemical analysis and the Welding Research Council (WRC) Delta Ferrite Diagram or a ferrite gage complying with American Welding Society (AWS) A4.2. Alternatively, for Shielded Metal Arc Welding (SMAW) electrodes and solid wire filler metal manufactured in the United States of America (USA), a CMTR may be used to confirm acceptability of the ferrite requirements.

3.3.1.15 Certified Material Test Reports are required for all filler materials. Certified Material Test Reports for gas shielded consumables shall reflect that testing was done with the same gas (gas mixture) as used in production.

3.3.1.16 The storage, baking and drying of all welding consumables (i.e., covered electrodes, flux cored electrodes and fluxes) shall be as recommended by the MANUFACTURER. Segregation of carbon steel, low alloys, and alloy consumables is required during storage, baking, holding, handling (including portable ovens), and in the fabrication area. Shielding and purging gases shall be welding grade, having a dew point of less than or equal to (-) 40°F.

3.3.1.17 Structural material:

Non-pressuring retaining structural materials such as anchors, supports, lifting lugs, etc.; shall be in accordance with the following. (Not applicable to valve actuators.)

A. Shapes and Bars: Conform to ASTM A276, Type 304L or 316L.

B. Plates: Conform to ASTM A240, Type 304L or 316L.

C. Pipe: Conform to ASTM A312, Grade TP 304L or 316L.

D. Tubing: Conform to ASTM A554, Grade MT-304L, Tensile strength 70 ksi min, Yield strength 25 ksi min.

E. Bolts: Conform to ASTM A193, Grades B8 or B8M, Class 1 or 2.

F. Nuts: Conform to ASTM A194, Grade 8 or 8M, heavy hex.

G. Washers: Cut from plate Conforming to ASTM A240, type 304 or 304L, or machined from bar stock that meets ASTM A193, B8 or B8M, Class 1 or 2. Dimensions in accordance with ASTM F436.

H. Welding Filler Metal: Conform to AWS D1.6

3.3.1.18 Bolts

A. All bolts required for assembly shall be in clearly marked containers and included with the first shipment of fabricated steel for each unit or structure unless alternate shipping methods are authorized, in writing by the BUYER. Common bolt assemblies shall not be in the same container as high strength bolt assemblies.

B. Quantities of both common and high strength bolts, including nuts and washers, shall include 5 percent extra per size and length, to cover requirements for fit-up erection.

C. All bolting materials shall be certified (CMTRs for FQA designated equipment and Certificate of Compliance C of C for CQA equipment), unless noted otherwise.

D. VENDOR shall segregate FQA, EQA and CQA fasteners.

E. All fasteners shall be controlled in accordance with QA clause B73.

3.3.1.19 Contact materials shall be controlled and documented in accordance with VENDOR's inspection and test plan as approved by BUYER.

3.3.1.20 Contact materials including marking materials, temperature indicating crayons, adhesive backed and pressure sensitive tape, and barrier and wrap materials may be used only under the following limits:

A. The total halogen content shall not exceed 200 parts per million (PPM).

B. The total sulfur content shall not exceed 400 PPM.

C. low melting point metals such as lead, zinc, copper, tin, antimony and mercury shall not be intentionally added.

D. Anti-spatter compounds shall not contain chlorine, fluorine, sulfur, mercury or other low melting point metals.

E. Materials and residue shall be completely removed when no longer required.

F. Cleaning materials may be non-halogenated solvents or potable water containing no more than 50 PPM chloride.

G. Marking materials and liquid penetrant materials used on austenitic stainless steels and nickel base alloys shall not cause corrosive or other harmful effects. A certification in accordance with QA clause B46 for penetrant materials shall be submitted for BUYER approval prior to fabrication.

3.3.1.21 Positive material identification of wetted components shall be performed for the following low alloy / Stainless Steel / High Allow materials

1. Low alloy steel containing more than 1% Cr, 0.5% Mo and/or 3.5% Ni.
2. Type 316/316L stainless steel
3. Type 321/347 stainless steel
4. 11-14% Cr (Type 410/410S/40S)

The welded joints and components shall be tested after fabrication. PMI shall be performed post fabrication. The VENDOR shall perform PMI examination of the finish weld, when accessible, and body of the component.

3.3.1.22 Surfaces

A. Surfaces exposed to the waste fluid shall be free of pits, scratches, gouges, and sharp weld ripples that could entrap solids. Based on the location and quantity, scratches or gouges greater than 0.02 in. deep shall be repaired by one of the following.

   5. Mechanically repair to the adjacent surface contour to eliminate areas that could potentially hold and/or trap contamination.

   6. Weld repair (if required) using an appropriately qualified procedure and welder, and mechanically finish to the adjacent contour. Associated non-destructive examination shall be in accordance with either the base material specification or the applicable welding code.

B. Piping, plate, or bar surfaces exposed to waste fluid shall have a surface finish not exceeding 32 μ in. (Ra) in accordance with ASME B46.1.

C. Castings and forgings:

   1. The external surface shall not exceed 125 μ in. (Ra) in accordance with ASME B46.1

   2. Castings and forgings shall be free of cracks, tears, or other linear defects.

   3. Any discontinuity exceeding 0.06 in deep after surface finishing shall be excavated and repaired by welding.

   4. Any discontinuity exceeding 1/16 in size, but not exceeding 0.06 in. deep after surface finishing shall be blended smooth into existing contour at no steeper than 1 in 3 slope.

   5. Randomly dispersed discontinuities of 1/64 in. or less shall be considered non-relevant and shall not be considered in the overall count. Areas deemed "spongy" are not acceptable and shall be removed by blending (to a depth not exceeding 0.05 in.) or repaired by welding.

   6. Relevant discontinuities shall be randomly dispersed with a minimum spacing of ¼ in. However, these discontinuities may be removed via blending if the depth does not exceed 0.05 in.

   7. As-cast surfaces in limited access regions of the hydraulic casing shall be removed, but are not subject to these requirements.

D. Conditions not addressed by these criteria shall be documented with proposed disposition and submitted to the BUYER for approval prior to any rework.

3.3.2 Radiation

A. Electromagnetic: N/A

B. Nuclear: Components, located below shield plugs, including elastomeric seals, must withstand 10^6 rads per year.

3.3.3 Cleanness and Foreign Material Exclusion

3.3.3.1 Prior to packaging an item, debris/contamination shall be removed using VENDOR's documented and approved standard procedure, unless specified otherwise. The

surfaces of equipment, valves and associated piping shall meet the ASME NQA-1 2008/2009A cleanness classification of Class B Cleanness. The surface shall appear clean and free of organic films and contaminates, when examined in accordance with ASTM A 380, and show no deleterious contamination when subjected to a wipe test of ASTM A 380. Wipe tests shall be made prior to the application of any preservative film (if required to maintain Class B level during storage period, prior to installation).

3.3.3.2 All equipment openings shall be capped, plugged or sealed in accordance with ASME NQA-1-2008/2009A to prevent entry of foreign material and humidity and protected against corrosion and physical damage.

3.3.4 Corrosion of Parts

Items subject to deleterious corrosion shall be protected in accordance with ASME NQA-1-2008/2009A (e.g., using either contact-preservatives, inert gas blankets, or vapor-proof barriers with desiccants to absorb any moisture inside the container). The VENDOR shall submit for BUYER approval a description of the preservation methodology specific to each package level type.

3.3.5 Protective Coatings

Stainless steel materials shall not be painted or coated unless noted otherwise on drawings.

3.3.6 Interchangeability

A. The inner module shall be interchangeable with all valves of the same size and configuration and be designed to be inserted into the valve body in only one way to prevent incorrect alignment.

B. To the extent practical shield plugs will be interchangeable for each valve size and shield plug type (stepped versus non-stepped).

C. The Valve Actuation Shaft to Valve Stem connection shall be standard for each valve size such that all actuation shafts for a particular valve size will work on all valves of that size regardless of shaft length.

D. The Valve Actuation Shaft to Actuator connection shall be standard for each valve size such that all actuators for a particular valve size will interface with all valves of that size regardless of shaft length.

E. Inner modules with valve plugs and inner modules with instrumentation should be interchangeable with all valve bodies of the same size and configuration.

3.3.7 Identification and Marking

All valves shall be identified with LAWPS equipment labels in addition to any manufacturers name plate. At a minimum, labels shall be on the valve body, shield plugs, actuators and extension shafts. Specific identification requirements are provided below.

3.3.7.1 The valve body and the shield plug (as applicable) shall have a type NH label (see Figure 3-5 and Table 3-5) permanently attached. The location for the label on the shield plug is shown on the applicable DPD. For valve bodies (components below the shield plugs) of the remote shaft or remote sleeved configuration, the applicable information may be vibro etched on the valve body directly in lieu of a label. Alternatively for Sleeved Valve

Assemblies (Figure 3-3) the label may be affixed to the valve sleeve in lieu of the valve body.

The label shall contain the following:

A. Valve Equipment Identification Number (EIN) as defined on the applicable DS (listed as tag number).

B. Equipment Description (BUYER Supplied)

C. Operating Pressure

D. Pressure Rating

E. Service, as defined on the applicable DS.

F. Bar code (BUYER supplied)

3.3.7.2 The valve actuator (as applicable) shall have a type NH label (see Figure 3-5 and Table 3-5) permanently attached.

The label shall contain the following:

A. Valve Equipment Identification Number (EIN) as defined on the applicable DS (listed as tag number).

B. Equipment Description (BUYER Supplied)

C. Operating Pressure

D. Pressure Rating

E. Type (Normal, Standby, or Emergency), and Location.

F. Failed Condition (Open, Closed, Last)

G. Bar code (BUYER supplied)

3.3.7.3 All switches (as applicable) shall be labeled with position (On-Off, Hand-Off-Auto, Etc.) indication and direction of operation, as necessary. Labels shall comply with section 3.3.7.5 but do not need to be a type NH label.

3.3.7.4 The valve extension shaft (as applicable) shall be labeled on both ends using low stress stamps, vibro-etching or equivalent. Lettering shall be a minimum of 1/8" high.

The following information shall be included:

A. Valve Equipment Identification Number (EIN) as defined on the applicable DS.

B. Equipment Description (BUYER Supplied)

C. Service, as defined on the applicable DS.

3.3.7.5 Equipment Label Requirements

3.3.7.5.1 All labels not located in process pits shall use a Metalphoto® (anodized photosensitized aluminum) base. (Reference www.mpofcinci.com)

3.3.7.5.2 Metalphoto labels shall use a black background (foreground color will be bare aluminum).

3.3.7.5.3 All labels located in process pits shall be laser-engraved stainless steel.

3.3.7.5.4 Stainless steel labels shall use black text on a stainless steel (plain/natural) background.

3.3.7.5.5 Labels shall be 15 ga in thickness.

3.3.7.5.6 Font - USE ALL CAPITAL SIMPLE BLOCK TYPE FONT. All labels in a given area shall be of the same font.

3.3.7.5.7 Spacing between words shall be at least one full character width.

3.3.7.5.8 Spacing between lines on the label shall typically be at least one times the character height of the line being printed.

3.3.7.5.9 When Type NH Equipment labels are specified, they shall meet the additional requirements in Figure 3-5 Type NH Equipment Label and Table 3-5 Type NH Label Size.

Figure 3-5 Type NH Equipment Label

DESIGN ID: NH	LABEL SIZE CODE: C0	WIDTH: 3.00"	BORDER: 0.188"	HEIGHT: 1.50"

LINE	BAR CODE REF	DEN	MAX CHAR	ROW HGT	JUST C/L/R	START SIDE	TOP	FONT
1			23	0.19	C	1.50	0.36	R-HEL-BOLD
2			32	0.13	C	1.50	0.60	R-HEL-BOLD
3			32	0.13	C	1.50	0.73	R-HEL-BOLD
4			29	0.13	C	1.50	0.99	R-HEL-BOLD
5			18	0.10	R	-0.20	1.16	R-HEL-BOLD
6			9	0.11	C	1.50	1.49	R-HEL-BOLD
7	6	7.1	9	0.15	C	1.60	1.39	R-HEL-BOLD

Table 3-5 Type NH Label Size

Type	Outside Dimensions			Inside Dimensions		
	Height	Width	Radius	Height	Width	Radius
NH	1.75	3.125	.250	1.458	2.958	.188

3.3.7.6 Attaching labels

3.3.7.6.1 Labels may be attached to the equipment using permanent stainless steel fasteners, or hung in a permanent fixed location with stainless steel aircraft cable, as best suited to the application. Stainless cable shall be 0.063 inches in diameter in a 7 x 7 strand matrix and fastened with stainless steel wire crimps.

3.3.7.7 Part Marking

In addition to the equipment labeling, all major valve parts shall be individually marked with the valve EIN and part number. The purpose of the individual part marking is to facilitate installation, maintenance and any other activity that requires disassembly and reassembly of the valve assemblies.

3.3.8 Human Factors Engineering

The three primary human factors that need to be considered for the valves are the potential to align the valves in the incorrect position, the actuation of the valves at the inappropriate time, and over torqueing of the valves. These three factors are addressed in this specification as outlined below:

A. Valve position

Visual indication of valve stem position shall be provided per Section 3.2.3.1 M.

Valve position indicators showing the open/close state of actuated valves shall be provided per 3.3.14.12.

B. Valve actuation

Provisions to lock the valves in position shall be provided per 3.2.2.1 K.

C. Over torqueing valve extension shaft.

Over torqueing of valve extension shafts shall be addressed in accordance with 3.2.3.1 P.

3.3.9 Document Submittals

3.3.9.1 General

This section provides the general procedures and requirements for preparing and processing engineering, design, fabrication, testing, and other submittals.

3.3.9.1.1 Refer to TFC-BSM-IRM_DC-C-07 for BUYER submittal process.

3.3.9.1.2 For each formal submittal (regardless document type), VENDOR shall complete transmittal letter form A-6005-315, provided by BUYER.

3.3.9.1.3 The VENDOR shall track and record delivery and review status of submittals by maintaining a submittals list and retaining copies of Submittal Forms and letters of transmittal itemizing delivered items and reports during course of work. VENDOR shall retain until construction completion. Notes or markings added by hand shall be legible, utilizing permanent non-smearing marking media, such as ink or felt tip markers, in a contrasting color. An alternate means of recording delivery may be used with BUYER approval.

3.3.9.1.4 Requests for Information (RFI) shall be submitted on form A-6003-417 (provided by BUYER).

3.3.9.2 Submittal Type

3.3.9.2.1 The MSR provides a roadmap to the specific sections that contain submittals by reference in the "Applicable Section Submittal Reference" column.

3.3.9.2.2 The MSR lists the document/record, the type (Approval or Acceptance), the number of copies (paper and/or electronic), and the date required (this may be either actual date or a calculated date such as 10 days before fabrication).

3.3.9.2.3 Required submittals generally fall into one of two categories:

A. Approval Required prior to work

B. Approval Not Required, for information/Record only

3.3.9.3 Submittals for Approval

3.3.9.3.1 VENDOR shall submit a preliminary 60% and a 90% final design review packages. The packages shall include:

A. Calculations for the specialty valve assemblies. Calculations shall be complete enough to confirm NPH design, general sizing and operating parameters of wall thicknesses, supports, shaft diameters and other components as applicable to ensure that the final design will fully satisfy BUYER'S defined requirements.

B. Mechanical Drawings for the specialty valve assemblies. These drawings need to provide enough detail to show a conceptual layout, interface dimensions and pneumatic schematics.

C. Data sheets that include VENDOR information and design and operating parameters. Information shall include but not be limited to: positioner, limit switches, solenoid valves, enclosures and accessories.

D. Safety Instrumented System (SIS) Safety Manual and Diagnostic Data and Failure Modes, Effects and Diagnostic Analysis (FMEDA) documentation (where applicable) supporting dangerous undetectable failure rates specified on the valve data sheets

E. Electrical submittals shall include but are not limited to, electrical load list, technical data sheets, reliability and factory test reports, detail electrical schematics, electrical wiring diagrams, power distribution and grounding diagrams, termination schedules, input/output schedule, label details, system configuration details and supplied cable details.

F. Bill of materials

G. General Arrangements, Assembly, Sub-assembly, and Detail Drawings.

3.3.9.3.2 BUYER's review of VENDOR's drawings, or release of the equipment for shipment by BUYER's representative, shall in no way relieve VENDOR of the responsibility for complying with all the requirements of this specification and the purchase order.

3.3.9.3.3 The following documents (as applicable) shall be provided by the VENDOR as defined in box 17 on the MSR by the particular document.

A. Overall fabrication work plan.

B. Quality assurance program for design and fabrication.

C. Design software verification and validation report (as applicable).

D. List of fabrication codes and standards.

E. Non-destructive examination procedures.

F. Calculations justifying the proposed valve design. Calculations shall include, but not be limited to:

1. Code calculations (as applicable). Design calculations shall include relevant ASME B16.34 formulas and source paragraphs, values used in the formulas, the calculated results and comparison with acceptable values. Where computer program software is used for calculations, each calculation shall include a brief program description of the software shall be given, including the name and version of the program software. If the program software is not commercially available to industry, VENDOR shall maintain and provide, upon request, program software documentation.

2. Seismic calculations including base horizontal seismic force and moment inclusive of fluid induced impulsive and convective forces, and loads for anchorage and anchor bolt design. See Section 3.3.15.1.3.

3. Support calculations including empty weight, operating weight and location of center of gravity.

4. Design of attachments; internal, external, lifting, and hold down (as applicable).

5. Thermal and discontinuity stresses as applicable.

6. Valve sizing to include sound pressure level (SPL)

7. Actuator sizing, taking account of drive shaft lengths, and frictional losses, etc.

G. Design details of each welded joint uniquely identifying the parts joined by the weld. In some cases the use of AWS welding symbols, properly annotated, and applied to the fabrication drawings will suffice for this requirement.

H. Weld procedures and welding procedure specifications (WPS) with applicable Procedure Qualification Records (PQR) covering each weld, prior to the start of any welding, bonding, brazing, and heat fusion process, in accordance with QA clause B28.

I. Welder and inspector qualification records and welder continuity records in accordance with QA Clause B28.

J. Certified Electrical Inspector Qualifications Records will be provided for personnel that perform project work in accordance with QA Clause B17.

K. Liquid penetrant material certifications in accordance with QA Clause B46.

L. A dimensional drawing for the valve assemblies indicating all dimensions necessary for support, lift and shipping of the completed valve assembly. Tolerance held for such dimensions shall be noted, either on the specific dimension or in general notes. Dimensions locating centers of gravity which are generated by calculation shall be so noted on the drawing, and the calculations shall be submitted with the drawings.

M. Detail drawings shall give a complete dimensional and material definition of every part designed and fabricated. Parts available commercially with standard dimensions (i.e. – standard forgings, flanges, etc.) shall be identified by manufacturer and part number.

N. Detail drawings shall identify and call out all components in a parts list that shows materials of construction, applicable construction code (e.g. B31.3), and quality level (e.g., FQA, EQA, CQA).

O. All submittals and records pertaining to the NDE, base materials, filler materials, fabrication, and inspection shall be traceable to the area and part inspected and be accessible for BUYER's examination.

P. VENDOR shall provide a Fabrication Inspection and Test Plan which shall include the shop traveler summaries. Where applicable, the fabrication/heat treating sequence and methodology shall be addressed.

Q. VENDOR shall provide a compliance matrix that provides a cross-walk between BUYER'S requirements and the document(s) that demonstrate compliance.

R. Field Installation Procedures, including recommended procedures that need to be followed for welding the valve body to the piping systems. (e.g., prior removal of all polymers / elastomers). Shall include details on assembly of major components, including but not limited to installation of shield plugs, and actuator mounting.

3.3.9.3.4 VENDOR shall submit the following plans for BUYER's approval:

A. Assembly plan

B. Factory acceptance test plan

C. Seismic qualification plan

D. Lifting and rigging plan.

E. Cleaning plan.

F. Packaging and shipping plan.

3.3.9.3.5 VENDOR shall prepare a final data package for each valve assembly. Final Data package submittal items shown on the MSR shall be submitted and approved by the BUYER prior to release for shipment. This package shall include as a minimum, but not limited to the below items:

A. Fabricator's Certificate of Conformance.

B. Signature Verification sheet.

C. Receiving Inspection Reports.

D. VENDOR's Certificate of Conformance in accordance with QA Clause B79.

E. Certified Material Test Reports (CMTR) (including chemical and physical properties test results, and heat treat condition and corrosion test results as defined in the applicable DSs or DPDs). CMTRs shall be in accordance with QA Clause B49.

F. Liquid Penetrant Material Certification.

G. Fabrication Travelers in accordance with QA Clause B13.

H. Weld Inspection Reports.

I. Weld Maps.

J. Weld History Reports.

K. Nondestructive Inspection Reports.

L. Nondestructive Testing Material Certification Reports.

M. Calibration Certificates/Reports in accordance with QA Clause B12 AND B61.

N. Dimension Verification Reports (including critical dimensions).

O. Fastener Tightening Reports.

P. Factory Acceptance and Pressure Test Reports.

Q. Flushing Records: records verifying acceptable completion of flushing.

R. Lift Test Records with weight certifications

S. Final Inspection Report

T. Miscellaneous Inspection Reports. (electrical inspection reports, seismic qualification test reports, etc.)

U. Non Conformance Reports (closed).

V. Manufacture's/VENDOR's data (i.e., data sheets, material cut sheets, operation & maintenance manuals, etc.). Data Sheets (including Safety Data Sheets) shall be supplied in accordance with QA Clause B33.

W. Request for Information (pertinent to the fabricated assembly).

X. Approved Design Changes - Design Change Notices (DCN's).

Y. Calculations

Z. Detailed As Built Drawings.

AA. FMEDA Documentation

BB. Valve Sizing Calculation including SPL

CC. Firmware/Software Records and Licenses (if applicable)

DD. A detailed list of recommended spare parts for both the start-up and operational phases shall be provided in accordance with QA Clause B82.

EE. CGI Dedication Report

FF. Electrical inspection reports. (3.3.15.1.2 D)

GG. Qualification Data

HH. SIL Certificates for SIL Rated Components

II. Positive material identification reports

3.3.9.3.6 VENDOR shall submit for information to BUYER Cv and flow areas versus stem position curves. Curves shall cover 0-100% of the valve closure range and have data points at 10% increments. Curves shall be provided for each size of each type of valve in the scope of supply.

3.3.10 Personnel and Training

Personnel shall be trained in accordance with the VENDOR'S approved Quality Assurance Plan (QAP).

3.3.11 Valve Fabrication and Testing

3.3.11.1 Any special equipment or tools necessary to operate or maintain the valves shall be included with the valve procurement. Operating and Maintenance manuals, Instructions and diagrams shall be included with the special equipment describing how to use it/them.

3.3.11.2

3.3.11.3 Hold Points

A. At a minimum, the witness and hold points of Table 3-6 shall apply.

Table 3-6 Valve Hold Point Verification

Verification Point Description	Type of Verification
Prior to the first production weld for each weld procedure	Hold
Prior to NDE Inspection	Witness
Prior to Hydrostatic / Leak Test	Witness
Prior to Load Test	Witness
Seismic Qualification Testing per 3.3.11.14	Hold
Valve Component Installation for each valve type	Witness
Prior to Final Inspection	Hold
Prior to Shipping	Hold

B. The VENDOR shall provide required notifications of verification points as applicable and shall not proceed past required hold points without written authorization from the BUYER QA representative.

3.3.11.4 Welding Procedures for all waste pressure boundaries welds

A. Welding procedures shall be qualified in accordance with ASME B31.3, Paragraph 328.2 and ASME BPVC Section IX. Welding Procedure Specifications (WPS) and Procedure Qualifications Records (PQRs), if applicable shall be in accordance ASME BPVC Section IX.

B. The welding procedures shall follow the format of and include all the information required by Form QW-482 of ASME BPVC Section IX.

3.3.11.5 Welding of pressure retaining valve body components shall be performed in accordance with ASME B16.34. (This does not apply to actuator components).

3.3.11.6 Welding of non-pressure retaining structural components shall be performed in accordance with AWS D1.6.

3.3.11.7 The VENDOR shall provide lifting points to the valve and actuator assemblies for installation of standard lifting eyes and/or shackles to allow both horizontal and vertical handling operations. All lifting points shall be clearly identified and labeled. Also, lifting points for vertical handling of replaceable valve internals/cartridges.

3.3.11.8 All lifting attachments shall be self-centering. When hoisted, the valve and actuator assemblies shall hang in their normally installed orientation.

3.3.11.9 The lifting points shall be designed to permit lifting the valve unit without distortion and damage or misalignment to the components of the assembly.

3.3.11.10 All lifting attachments shall be designed and evaluated using the analysis approach described in Section 5.6.2.

3.3.11.11 Valve body shell test shall be performed on every valve in accordance with ASME B16.34. This shall be verified by hold point or source verification.

3.3.11.12 VENDOR's seat closure tests shall be performed on every valve in accordance with ASME B16.34 for test pressure (gas not less than 80 psi) and test time utilizing the test methods in API 598. The hydrostatic seat test for valves shall be performed on the completely assembled valve with the seat having been closed by the applicable actuator. This shall be verified by hold point or source verification.

3.3.11.13 Each completed actuator and valve assembly shall be cycled from full open to full closed and back to full open for verification of limit and torque switch function and setting, and the ability of the actuator to open and close the valve after the seat leakage test has been performed. Cycling of valve shall be done at fluid maximum shutoff delta P and temperature. Valve travel stop settings, hard stop locations, position switch settings and position indicators shall be verified. BUYER shall witness test. Testing performed shall replicate the as-installed configuration, e.g. taking account of drive shaft lengths.

3.3.11.14 Performance tests shall be conducted on each valve size and type using VENDOR designed lifting provisions to demonstrate the ability to remove and install valve components into the valve body remotely using long handled tools. Test will also be completed to remove valve cartridge and replace with a new valve cartridge. Seat closure tests shall be done after new cartridge is installed to demonstrate seal maintainability and repeatability. These tests shall be a QA witness point.

3.3.11.15 Valve shall meet the applicable qualification requirements specified in Table 3-3 and Section 3.3.16. For qualification activities, valves shall be considered QV Category A valves as defined in ASME QME-1. All valves denoted as having seismic Limit State D shall be capable of operation during and after the data sheet specified seismic event (e.g. SDC-2, Limit State D).

3.3.11.16 An interchangeability test shall be performed for each valve body and cartridge. The test shall consist of:

A. Perform a seat closure test in accordance with Section 3.3.11.12 for each valve body/cartridge set.

B. Remove the cartridge from the body, install a different cartridge into the valve body. Install the cartridge into a different body

C. Repeat a seat closure test for the original valve body with new cartridge and the original cartridge in the new valve body.

3.3.12 Non-Destructive Examination

A. All castings shall be visually inspected on all accessible surfaces. Visual examination for castings shall be performed in accordance with the requirements to MSS-SP-55.

B. Non-destructive examination is required for each FQA valve. All NDE personnel shall be qualified in accordance with ASNT SNT-TC-1A. All personnel shall be Level II or Level III. The extent of examination shall be as follows:

1. 100% Visual Examination (VT) in accordance with MSS-SP-55.
   a. Valve body dimensions shall be taken at the nozzles where the minimal thickness is relative to the rest of the valve body, to verify compliance with the required wall thickness.
2. 100% Liquid Penetrant Examination (PT) in accordance with ASME B16.34.
3. 100% Radiography (RT) in accordance with ASME B16.34 on critical areas providing primary containment of the pressure boundary.
4. Verification of O-rings, gaskets and seals functionality according to the following acceptance criteria:
   a. Part number shall be confirmed per the call out of the applicable Valve data sheet.
   b. Material composition shall be established via chemical analysis per the call out on the applicable valve data sheets.
   c. Surfaces shall be free from protruding foreign material and be free of surface defects as determined by visual examination.
   d. Dimensional tolerances are compliant as specified in VENDOR's data or to tolerances on drawings for fabricated items. Where no VENDOR's data is available the tolerance shall be as identified by the applicable dimensional standard.

C. Inspection and examination of structural welds shall be in accordance with AWS D1.6.

D. All non-reference dimensions on the BUYER supplied DPDs shall be dimensionally verified and documented on an inspection report. Additional dimensions may be identified by the BUYER for dimensional verification during the BUYER's review of the VENDOR's design and fabrication drawings.

3.3.13 Weld Repairs

A. The cost of replacing or repairing defective welds including additional examinations or tests resulting from those defects shall be borne by the VENDOR.
B. Defects in welds shall be removed by mechanical methods, such as chipping, machining or grinding. Excavated areas shall be magnetic particle tested (ferrous material) or liquid penetrant tested (non-ferrous material) to assure defect removal. Inspection reports shall be generated.
C. Repair welds shall be made in accordance with welding procedures which have been previously approved for the original weld, unless an alternate procedure is approved by the BUYER.
D. Examination and/or inspection of the completed weld repair shall be the same as the original weld or by a BUYER approved alternate method.
E. No more than two repairs will be permitted on any one weld.
   a. Cutting out and rebeveling then rewelding is considered a weld repair.

b. No further attempts to repair shall be carried out without the written authorization of the BUYER.
c. Weld repairs subsequent to the first two repair attempts shall be made only after receiving written approval of VENDOR's repair procedures.

F. Arc Strikes shall be removed and the area ground to a smooth contour. After grinding the area shall be examined by liquid penetrant or magnetic particle examination.

G. The metal wall thickness shall not be reduced less than that permitted in the applicable design document, code, or standard without BUYER's approval.

3.3.14 I&C Requirements

3.3.14.1 The valve data sheet will define which valves require pneumatic actuators.

3.3.14.2 All valves which incorporate body sleeves, or part sleeves, shall be designed to have the actuator, hand-wheel, valve body (nozzle axes), locking mechanisms, shield plugs and sealing flange configured in accordance with the BUYER supplied DPDs. All parts shall be clearly marked to indicate their assembly configuration to enable accurate rebuilding for field installation or maintenance. The parts of each valve shall be uniquely identified as belonging to that valve in accordance with Section 3.3.7.7. All marking and labeling shall be consistent for all valves and their components.

3.3.14.3 Looking in plan view, the design of the actuator mounting and valve spindle drive shall permit the actuator to be installed in parallel and perpendicular to the process piping.

3.3.14.4 The valve VENDOR shall submit pneumatic and electrical circuit diagrams to the BUYER for approval prior to fabrication, where applicable.

3.3.14.5 Valve action (energize to open/energize to close, fail open / fail close / fail last) will be identified on the valve data sheet.

3.3.14.6 For valves that rely on a position switch for indication of position, loss of power to the switch shall not result in a false indication of valve position. Switches, when supplied, shall be mounted on the actuator outside the shielding.

3.3.14.7 The actuator type and valve failure position will be specified on the valve data sheet.

3.3.14.8 Valve accessories, such as actuator type, solenoid valve, positioner, position switch, and/or airset will be specified on the valve data sheet. VENDOR shall provide all accessories as stated on valve data sheet or provide alternate accessories with BUYER's approval. Accessories shall be provided per data sheet specific diagram.

3.3.14.9 Additional requirements associated with Safety Instrumented Functions (SIFs) will be specified on the valve data sheet.

3.3.14.10 The actuator and accessories shall be mounted on the valves completely assembled, piped, aligned, tested, and shipped as a complete unit. Where this is determined by the VENDOR not to be practical, or may result in damage during shipment, VENDOR shall request written direction from the BUYER.

3.3.14.11 Instrument Air Tubing

3.3.14.11.1 All tubing and fittings used shall be seamless, 316 stainless steel, with a minimum of 3/8 inch OD.

3.3.14.12 Valves position indicators shall be color coded as follows:

- Green – "Open"
- Red – "Closed"

3.3.14.13 Deleted.

3.3.14.14 Actuators shall meet or exceed the Break, Run, and End of Stroke torque values for each valve, and shall include a margin which shall be identified. The VENDOR shall provide the estimated time to fully open and close each valve.

3.3.14.15 Low wattage, 24 VDC solenoid pilot valves shall be provided unless noted otherwise on the valve data sheet. The solenoid pilot valve vent shall be furnished with a bug-proof fitting.

3.3.14.16 Actuators and accessories shall be assembled, wired and piped. Actuators and valve assemblies shall be packaged for shipping in accordance with PSSH. (Section 5.1)

3.3.14.17 In the event of instrument air failure or loss of signal, the actuator shall drive the automated valve to the failure position specified in the valve data sheet.

3.3.14.18 The size of the actuator shall meet the control, shutoff, and leakage class requirements at the data sheet specified minimum air pressure.

3.3.14.19 Solenoid valve coils shall be rated for continuous duty.

3.3.14.20 Deleted

3.3.14.21 Actuator and accessories shall be installed per valve data sheet specified design proposal drawing.

3.3.14.22 Control Valves

3.3.14.22.1 Sound pressure level produced by the automated control valves shall not exceed and overall 85 dBA as calculated per ISA 75.17. Where this SPL level is exceeded, the design of the trim shall maximize the noise attenuation within the valve body before considering the use of insulation, increased wall thickness, diffusers, silencers, etc.

3.3.14.22.2 Automated control valve flow direction shall be permanently marked on the valve body.

3.3.14.22.3 The automated control valve body shall not exceed the line size. Standard body sizes shall be used; whenever non-standard sizes are required, reduced trim shall be used to allow installation of standard body sized valves. The valve body size shall not be more than two line sizes smaller than the process line size.

3.3.14.22.4 Control valves shall be sized to handle pressure drops under start-up, upset, turndown or abnormal operating conditions. Control in the lower 10% and upper 10% of valve stroke shall be avoided. The valve control type shall be designated based on the control requirements.

3.3.14.22.5 Control valve shall be sized to operate between 50% and 70% of the valve's capacity at normal flow rate, unless otherwise noted. Valve characteristics shall be selected based on process requirements.

3.3.14.22.6 Valve sizing shall be in accordance with ISA 75.01.01, Flow Equations for Sizing Control Valves. The valve sizing coefficient (Cv) shall define the valve capacity at 100% valve travel.

3.3.14.23 Instruments installed as part of valve body

A. Instrument shall be supplied as specified in data sheet.

B. Remote sensing line length shall be provided as specified on the data sheet.

C. Sensing line shall be filled at the manufacturers' and supplied as complete and ready to be installed.

3.3.14.24 VENDOR shall confirm that all software/firmware is covered by an End-User Licensing Agreement (EULA) for commercial or governmental use. If standard EULA does not exist for governmental use, VENDOR shall provide means to gain approval.

3.3.15 Electrical Requirements for Mechanical Equipment

3.3.15.1 Electrical General

A. Electrical design shall be in accordance with the Codes and Standards as applicable:

- IEEE 142, Recommended Practice for Grounding of Industrial and Commercial Power Systems
- IEEE 384, Standard Criteria for Independence of Class 1E Equipment and Circuits
- IEEE 1202, Standard for Flame Testing of Cables for Use in Cable Tray in Industrial and Commercial Occupancies
- NEMA ICS 2, Controllers, Contractors and Overload Relays Rated 600V
- NEMA WC57, Standards for Control, Thermocouple Extension, and Instrumentation Cables
- NEMA WC70, Power Cables Rated 2000 Volts or Less for the Distribution of Electrical Energy
- NFPA 70, National Electric Code
- NFPA 70E, Electrical Safety in the Workplace
- UL 6, Electrical Rigid Metal Conduit - Steel
- UL 83, Thermoplastic Insulated Wires and Cables
- UL 508A, Industrial Control Panels
- UL 870, Wireways, Auxiliary Gutters, and Associated Fittings
- UL 1203, Explosion Proof and Dust Ignition Proof Electrical Equipment for Use in Hazardous (Classified) Locations
- UL 2062, Outline of Investigation of Enclosures for Use in Hazardous (Classified) Locations

B. NEMA Type 4 or 4X enclosures shall be used.

C. VENDOR shall select valve actuator solenoids to operate from 24 VDC power supply.

D. Positioner, solenoid and limit switch enclosure shall be protected to NEMA 4.

E. All electrical equipment must be rated for the application and environment for which it is being used, i.e., motor enclosures and cabinets must be rated for the environment as well as the application.

F. VENDOR shall furnish and prewire all components necessary for the complete and proper operation of the packaged equipment.

G. All electrical material and equipment shall be listed and labeled by Underwriters' Laboratories, Factory Mutual, or equivalent testing laboratory for the service in which it is used, and shall bear their label or listing. Material and equipment not available with such label or listing shall be built in accordance with the latest published standards, of UL, FM, or equivalent testing laboratory.

H. If UL or other generally recognized listing has not been accorded, VENDOR shall produce evidence that the devices have been manufactured in accordance with such standards.

I. The BUYER will install and terminate all power, control and instrumentation cables connected between BUYER's remote equipment and the VENDOR provided interface control, instrumentation and power junction boxes.

J. VENDOR shall provide a system which will operate without failures attributed to ground problems when installed according to NEC requirements and VENDOR's recommendations.

K. All wiring and insulation within panels shall be flame resistant. Wiring insulation shall be capable of passing the flame test of UL 44, UL 1581, IEEE 383 or other BUYER approved flame test.

L. Terminal blocks shall be labeled.

M. Lock nuts with grounding bushings or hubs with ground lugs shall be used on conduit entries to enclosures on all equipment.

N. Enclosures shall be suitable for cable entry from below.

O. Instrumentation and thermocouple extension cables shall be 600V, Class B stranded Cross-Linked Polyethylene (XLPE) insulation, 90°C wet or dry, low smoke zero halogen jacket, #16 minimum twisted pairs/triads, shielded with overall shield, type TC cable. Color-coded per ICEA 5-73-532 Method 1.

P. Control cables shall be 600V, Class B Stranded XLPE insulation, 90°C wet or dry, low smoke zero halogen jacket, #14 minimum, type TC cable, Color-coded per ICEA 5-73-532 Method 1.

Q. All wire and cables shall be stranded copper with XLPE type XHHW-2 insulation with PVC jacket.

3.3.15.1.1 All devices requiring external connections shall be routed to terminals in junction boxes. Separate terminal boxes shall be provided for:

A. AC control circuits.

B. DC Analog, RTDs, digital signals or measurement circuits shall occupy the same instrument terminal box, and shall be terminated on separate terminal blocks. Shields shall be wired to separate terminal points.

3.3.15.1.2 Electrical Testing and Inspection

A. VENDOR shall provide factory tests that shall include, but not be limited to, complete functional test of all electrical components to insure that the packaged mechanical equipment performs its intended function.

B. VENDOR shall perform continuity test on all electrical circuits to verify all devices are installed and connected in accordance with drawings and/or specifications.

C. Tests shall be performed with calibrated instruments traceable to NIST or other nationally recognized standards.

D. VENDOR shall supply documented evidence of testing.

E. Refer to the procurement document or related mechanical equipment specification for additional requirements.

3.3.15.1.3 Where SS designated valves with critical characteristic: valve components provide for both SS and non-SS circuits, IEEE 384 separation shall be applied as follows:

A. A separate junction box shall be provided for termination of safety rated solenoids and/or switches.

B. SS terminals and cable entries shall require physical separation spacing of 1In in the horizontal and 3In in the vertical from Non-SS terminals and cable entries.

C. Separate cable conduit entry shall be provided for SS and non-SS cables.

D. Vendor provided wiring shall maintain the separation distance stated in section 3.3.15.1.3.B for any customized wiring provided to meet this specification and data sheet requirements. Note: This requirement does not apply to VENDOR standard wiring practices for their instruments.

E. Location of cable entries and terminals shall permit separation distance stated in section 3.3.15.1.3.B to be maintained during field installation of Buyer cables and wires.

3.3.16 NPH Requirements

3.3.16.1 Temperature

A. The design of Structures, System or Component (SSC) in particular systems, shall include the effects of stresses and movements resulting from variations in temperature. Whether located indoor or outside, SSC design shall consider the effects on the required Limit State of change in temperature from the maximum seasonal temperature change (-18°F to +115°F).

B. Automated valve actuators and controls may be required to be designed for maximum seasonal temperatures where designated as such on valve data sheets.

3.3.16.2 Seismic Requirements for Seismic Design Criteria (SDC)-1 and SDC-2

A. SDC-1 and SDC-2 seismic loads shall be determined per ASCE 7 with horizontal S_{DS} = 0.588g, S_{D1} = 0.192g and the vertical S_{DS} = 0.346g, S_{D1} = 0.098g.
B. The total seismic response shall be computed by combining the co-directional responses from the two horizontal and the vertical analyses by either the SRSS method, or the Component Factor Method (1/0.4/0.4)
C. The SSC equivalent Risk Category (RC), Response Modification Coefficient, R, and Importance (I) factors for the required SDC and Limit State are as shown in the table below:

Table 3-7 Acceptance Criteria for Limit States

SDC	Limit State			
	A	B	C	D
1	ASCE/SEI 7-10 Risk Category II I = 1.0 $R_a = R^{(1)}$	ASCE/SEI 7-10 Risk Category II I = 1.0 R_a = R/1.25	ASCE/SEI 7-10 Risk Category II I = 1.0 R_a = R/1.5	ASCE/SEI 7-10 Risk Category II I = 1.0 $R_a \geq 1.0$
2	N/A	ASCE/SEI 7-10 Risk Category IV I = 1.5 R_a = R	ASCE/SEI 7-10 Risk Category IV I = 1.5 R_a = R/1.2 $R_a \geq 1.2$	ASCE/SEI 7-10 Risk Category IV I = 1.5 $R_a \geq 1.0$

[1]Note: R = Response Modification Coefficient given in ASCE/SEI 7-10, R_a = Actual (reduced) Response Modification Coefficient to be used in the design substituting R values given in ASCE/SEI 7-10 to account for the difference between the limit states achieved by ASCE/SEI 7-10 and the LS A, B, C, and D, as defined in ANSI/ANS-2.26-2004 and ASCE/SEI 43-05. ASCE/SEI 43-05, in Table C1-1, recognizes that Seismic Use Group (SG) I, SG II, and SG III of ASCE/SEI 7-02 (i.e., Risk Categories II, III, and IV, respectively, in ASCE/SEI 7-10) are equivalent to SDC-1 LS-A; SDC-1 LS-B; and SDC-2, LS-B, respectively. Also, it recognizes that SG III of ASCE/SEI 7-02 (i.e., Risk Category IV in ASCE 7-2010) is equivalent to SDC-1 LS-C. Thus, the ratio between LS A and B and between B and C are approximately 1.25 and 1.2, respectively. The R_a values given above are based on these ratios.

D. Damping for seismic qualification shall be as specified in ASCE 7.

E. Loads resulting from seismic events shall be considered to act concurrently with normal operating loads (dead and occasional loads, pressure, thermal, etc.) and shall be combined by absolute sum.

3.3.16.2.1 Methods of Qualification

Qualification may be by any (or a combination) of the three methods delineated below.

A. Analysis

Analysis in accordance with ASME QME-1, IEEE 344 or the code applicable to system or component is allowed for any SSC. Any of the following methods are acceptable for quantifying seismic response:

- Equivalent static method
- Response spectrum method
- Time history
- Complex frequency response method

B. Testing

Testing in accordance with IEEE 344, ASME QME-1 or ICC-ES AC156 may be used.

C. Experience Data/Similarity

Equipment may be qualified by similarity to previously qualified equipment. Qualification by similarity must address:

1. Materials, arrangement/configuration and dynamic similarity of the components.
2. Seismic input of previously qualified equipment must envelope the seismic design requirements of new components.

3.3.16.2.2 Acceptance Criteria

A. Structural integrity of SSC that is demonstrated by analysis shall be in accordance with ASCE 7 and IBC:

1. The criteria of AISC N690 shall be used for strucutral piping supports.
2. The code applicable to the specific SSC, i.e., ASME B31.3 for piping, may be used.

3.3.16.3 Seismic Requirements for SDC-3

The SDC-3 seismic input shall consist of in-structure response spectra (ISRS) for the structures at the elevations at which the SSC are mounted. Damping for seismic qualification shall be as specified in ASCE 43, Table 3-2.

Loads resulting from seismic events shall be considered to act concurrently with normal operating loads (dead and occasional loads, pressure, thermal, etc.) and shall be combined by absolute sum.

3.3.16.3.1 Methods of Qualification

The seismic qualification of SSC for SDC-3 shall be by one (or a combination) of three methods as delineated below.

A. Analysis

Analysis in accordance with ASME QME-1, IEEE 344 or the code applicable to system or component is the preferred method for passive mechanical equipment and distribution systems, and for electrical distribution systems. Preliminary quantitative

analysis performed in accordance with the applicable code shall demonstrate that the Demand to Capacity ratio of any component does not exceed 0.9. Any of the following methods are acceptable for quantifying seismic response:

1. Equivalent static method
2. Response spectrum method
3. Time history
4. Complex frequency response method

B. Testing

Testing in accordance with IEEE 344, IEEE 382, ASME QME-1 or ICC-ES AC156 is the preferred method for qualification of active mechanical and electrical equipment, and instruments and controls. The seismic input for qualification by testing, the Required Response Spectrum (RRS), shall exceed the applicable ISRS by a factor of 1.4:

$$RRS > 1.4 \times ISRS$$

All test valves shall be in the final assembled configurruation. Additionally any in facility support or piping connections should be simulated.

C. Experience Data/Similarity

Equipment may be qualified by similarity to previously qualified equipment. Qualification by similarity must address:

1. Materials, arrangement/configuration and dynamic similarity of the components
2. Seismic input of previously qualified equipment must envelope RRS of new components

3.3.16.3.2 Acceptance Criteria for Limit States

A. ASCE 43 Section C8.0 and Table C8-1 provide guidance for acceptable codes and standards for qualification by analysis for all types of SSC for SDC-3 seismic loads.
B. Alternatively for Limit States B, C, and D, ASME B31.3 may be used.

3.3.16.3.3 Other Requirements

Seismic qualification of SSC must address the end-of-life condition. The SSC qualified life considerations depend on the qualification method. For example:

A. Testing – Determine the need for environmental qualification for effects such as degradation of non-metallic materials in high temperature or radiation environments.
B. Analysis – Deduct corrosion allowance when calculating stresses. Address degradation mechanisms beyond general wall thinning such as cracking and fatigue.

SIS instrumentation and controls shall be seismically tested to respective data sheet instrumentation and controls specified criteria and equipment confirmed to be either functional after test or has failed to the safe state.

3.3.16.3.4 In-Structure Response Spectra

A. Final Response Spectra for the pits is being developed and will be provided to VENDOR when available. Preliminary data is provided in Table 3-8 Preliminary Response Spectra for design development. ISRS is at the point of attachment to the pit.

B. The VENDOR shall provide reaction forces and moments for all equipment support locations for dead, operational, thermal, and seismic loads. The VENDOR shall also supply forces, moments, displacements and rotations for all pipe interfaces for sustained, operational, thermal and seismic load conditions.

Table 3-8 Preliminary Response Spectra

Frequency	Spectral Acceleration (g)		Frequency	Spectral Acceleration (g)		Frequency	Spectral Acceleration (g)	
	Horizontal	Vertical		Horizontal	Vertical		Horizontal	Vertical
100	0.293	0.2135	5.882	0.7838	0.468	1.111	0.2954	0.1528
58.824	0.2937	0.214	5.75	0.7941	0.468	1.053	0.2769	0.1427
50	0.294	0.2142	5.556	0.7941	0.468	1	0.2603	0.1336
40	0.2943	0.242	5.263	0.7941	0.468	0.909	0.2351	0.1235
33.333	0.2967	0.2692	5	0.7941	0.4593	0.833	0.2141	0.1149
30.303	0.3129	0.285	4.545	0.7941	0.4436	0.769	0.1965	0.1075
25	0.348	0.3193	4.167	0.7941	0.4297	0.714	0.1815	0.1011
23.81	0.3576	0.3288	4	0.7941	0.4233	0.667	0.1686	0.0955
22.727	0.367	0.338	3.846	0.7941	0.4173	0.625	0.1573	0.0906
21.739	0.3761	0.347	3.571	0.7594	0.4061	0.588	0.1474	0.0861
20.833	0.3852	0.356	3.333	0.7294	0.396	0.556	0.1387	0.0822
20	0.3937	0.3644	3.125	0.7011	0.3804	0.526	0.1309	0.0786
18.182	0.4143	0.3849	2.941	0.6756	0.3664	0.5	0.1239	0.0753
16.667	0.4342	0.4048	2.778	0.6524	0.3536	0.455	0.1088	0.0676
15.385	0.4533	0.4239	2.632	0.631	0.3419	0.417	0.0967	0.0613
14.286	0.4727	0.4433	2.5	0.6115	0.3311	0.385	0.0867	0.056
13.333	0.4916	0.468	2.381	0.5935	0.3212	0.357	0.0784	0.0515
12.5	0.5085	0.468	2.273	0.5768	0.3121	0.333	0.0714	0.0476
11.765	0.5265	0.468	2.174	0.5613	0.3036	0.313	0.0654	0.0443
11.111	0.5441	0.468	2.083	0.5469	0.2957	0.294	0.0603	0.0414
10.526	0.5612	0.468	2	0.5334	0.2882	0.278	0.0557	0.0387
10	0.578	0.468	1.818	0.497	0.2667	0.263	0.0518	0.0365
9.091	0.6105	0.468	1.667	0.4644	0.2476	0.25	0.0483	0.0344
8.333	0.6418	0.468	1.538	0.4363	0.2312	0.238	0.0452	0.0326
7.692	0.6719	0.468	1.429	0.3993	0.2105	0.227	0.0424	0.0309
7.143	0.7011	0.468	1.333	0.3676	0.1928	0.217	0.04	0.0295
6.667	0.7294	0.468	1.25	0.3402	0.1775	0.208	0.0377	0.028
6.25	0.757	0.468	1.176	0.3163	0.1643	0.2	0.0357	0.0268
6	0.7749	0.468						

3.3.16.3.5 Requirements for Qualification Methods

a. Dynamic Analysis

1. Methods

The dynamic analysis shall be accomplished using the response spectrum, frequency domain or time-history approach. Time-history analysis shall be performed using either the direct integration method or the modal superposition method.

2. Modeling Equipment

Unless a more complex model, e.g., a finite element model, is required, the equipment shall be represented by a lumped-mass system consisting of discrete masses connected by weightless springs. The criteria used to lump masses shall be as follows:

The number of masses shall be chosen so that all significant modes are included. Missing mass shall be accounted for in developing the design forces and moments.

Mass shall also be lumped at the following points:

- Where a significant concentrated weight is located (e.g., the motor in the analysis of pump motor stand, the impeller in the analysis of pump shaft, etc.).
- Where there is a significant change in either the geometry or stiffness.

4 QUALITY ASSURANCE

Top level Quality Assurance Requirements are summarized on form A-6006-661. All specific requirements of ASME NQA-1 Part I and Part II that apply to this procurement have been identified on this document. Alternatively a BUYER approved QA program may be used in lieu of ASME NQA-1 Part 1 and Part II as defined in the SOW.

4.1 General

4.1.1 This section delineates the QA requirements and processes that will be utilized to execute this contract. Additional QA requirements may be delineated in the design documents and other contractual documents. For a listing of applicable QA clauses see Table 4-1 Procurement Quality Clauses.

4.1.2 The VENDOR agrees to incorporate the appropriate QA requirements of this section and those requirements specified elsewhere in the contract into their subcontracts and purchase orders for all lower-tier VENDORs and suppliers utilized in the performance of this contract, as the QA requirements apply for the services or items being provided. The VENDOR shall communicate these QA requirements to their personnel, suppliers, and lower-tier VENDORs so that items and work activities provide for safe and reliable construction.

4.1.3 The VENDOR shall provide access to its facility, documents and records, applicable to the performance of this contract for BUYER's review and assessment. The VENDOR shall flow down this "right of access" requirement to its sub-tier VENDORs and suppliers. The VENDOR shall coordinate the review or assessment of sub-tier VENDORs' and suppliers' facilities, documents and records with the BUYER.

4.1.4 The VENDOR is required to have and use a quality assurance program that is consistent with the requirements of ASME NQA-1 Quality Assurance Requirements for Nuclear Facility Applications in accordance with QA clauses B04, and B07, including applicable addenda requirements. The VENDOR's QA program will be reviewed, evaluated, and approved for BUYER through an onsite audit and has been added to their Evaluated Supplier List (ESL) prior to award of the contract.

4.1.5 If selected for oversight, the BUYER will co-ordinate with the VENDOR to conduct scheduled and periodic oversight of activities or products associated with this scope of work.

4.1.6 Nonconformance documentation and reporting shall be in accordance with QA clause B22.

4.1.7 Personnel performing weld inspections shall be certified in accordance with QA clause B25.

4.1.8 Nondestructive weld examination personnel shall be qualified in accordance with QA clause B31.

4.1.9 All required instruments and equipment shall be provided with a Certificate of Calibration in accordance with QA Clause B61.

4.1.10 Inspections and test reports shall be in accordance with QA Clause B52.

Table 4-1 Procurement Quality Clauses

PREAWARD	
B01	Quality Assurance Program Submittal and Pre-award Survey
B04	Supplier Quality Program Evaluation
B07	Certified Quality Program
SUPPLIER FABRICATION	
B12	Supplier Use of Calibrated Equipment
B13	Fabrication/Inspection/Test Plan
B14	Supplier Use of Software Controlled Instruments and Equipment Containing Embedded Software (Firmware)
B15	Supplier Use of Commercial off the Shelf Software
B16	Source Inspection
B17	Certified Electrical Inspector (non NEC-IAEI)
B18	Supplier Use of Spreadsheet Calculations Using Commercial off the Shelf Software
B22	Nonconformance Documentation and Reporting
B25	Certified Weld Inspector (CWI)
B28	Welding Procedures and Qualifications
B31	Nondestructive Examination Process
MATERIAL IDENTIFICATION	
B32	Identification of Items with Part number/Model number
B33	Identification of Items with Catalog Cut
TESTING AND TEST DATA	
B37	Identification and Traceability of Items.
B46	Liquid Penetrant Material Certification
B49	Certified Material Test Report
B52	Inspection and Test Report
B61	Certification of Calibration
B65	Nationally Recognized Testing Laboratory (NRTL) Listed or Labeled
INSPECTION AND ACCEPTANCE CRITERIA	
B70	Supplier Furnished Items
B73	Control of Graded Fasteners
B76	Procurement of Potentially Suspect or Counterfeit Items
B79	Certificate of Conformance
B82	Recommended Spare Parts Listing
B85	Packaging/Shipping procedures

4.2 QA Submittals

4.2.1 VENDOR shall submit a Quality Assurance Program (QAP) in accordance with quality causes B01 and B04. [Approval Required]

4.2.2 VENDOR shall submit changes to the VENDOR QAP. [Approval Required]

4.2.3 VENDOR shall submit to the BUYER all VENDOR-generated Nonconformance Reports (NCR), having proposed dispositions of "REPAIR", or "USE-AS-IS". NCRs having REPAIR or USE-AS-IS proposed dispositions shall not have the proposed disposition

implemented until the BUYER has agreed in writing with the VENDOR's proposed disposition. [Approval Required]

4.2.4 VENDOR shall submit to the BUYER, VENDOR-generated nonconformance reports upon completion and closure of the approved disposition implementation.

4.2.5 VENDOR shall submit Fabrication Work Control Documents prior to starting fabrication work. [Approval Required]

4.2.6 VENDOR shall submit completed Fabrication Work Control Documents as soon as the work and documentation are complete. [Approval Required]

4.3 Quality Assurance Requirements

4.3.1 General Requirements

4.3.1.1 During the performance of work, the VENDOR shall provide to the BUYER copies of all documents that constitute reports of deficiencies, weaknesses, nonconformances, or noncompliances with established requirements related to items or services provided for this Contract. Such documents may include:

- Nonconformance Reports.
- Critique Information/Reports.
- Investigation Reports.
- Internal/External Assessment/Surveillance/Audit Reports.
- Any other document associated with a deficiency or noncompliance.

4.3.1.2 The VENDOR shall accurately, completely, and voluntarily report the nature and actions taken in response to any noncompliance with the nuclear safety rules to the BUYER's Quality Manager, via the BUYER's Subcontract Administrator, and will take prompt and comprehensive corrective action to prevent recurrence.

Upon initiation, the form for nuclear safety rule noncompliance reporting shall include the following information:

- Title, location and description of the noncompliant condition.
- Date, time and organization that discovered the noncompliant condition.
- VENDOR point of contact for the noncompliant condition.
- Nuclear safety rules/requirement not satisfied.

After initiation, as the VENDOR's deficiency reporting process is utilized, the form for nuclear safety rule noncompliance reporting shall identify the following information:

- List of all compensatory measure taken.
- Causal factors identified.
- List of planned corrective actions.

4.3.2 VENDOR Design

Design calculations shall be provided to the BUYER for approval prior to initiating the final design. Engineering calculations and analysis shall be fully checked by a qualified individual other than the originator, and shall be signed and dated as checked. All final submittals of calculations shall be bound and shall include the title and purpose of the calculation, a table of contents or index, complete list of references, design basis and complete list of assumptions (if any), methodology, and sufficient information to allow independent verification of the calculation. VENDOR shall follow QA clauses B15 and B18 as applicable.

The VENDOR shall implement and maintain a quality assurance program in accordance with applicable requirements of NQA-1 for control of software used for calculation or analysis where the results are not checked by alternate methods (including as applicable for Safety Software Part II Subparts 2.7 and 2.14, and DOE O 414.1D Attachment 4).

4.3.2.1 The VENDOR shall identify the software and version used or applied with each document, calculation, and/or analysis which shall be traceable to a documented verification and validation.

4.3.2.2 Verification and Validation of software used for safety significant calculations shall be documented covering the range of the results and shall be conducted in accordance with the applicable QA program. A copy of the verification and validation package shall be provided for each software used to prepare safety significant calculations.

4.3.2.3 The BUYER shall define the quality assurance (QA practices) methodology applied during activities utilizing software. The VENDOR shall identify what industry standard or commercial practice methodology is followed for the design, development, testing, and change control of their software.

4.3.2.4 The VENDOR shall describe the process for reporting and documenting software problems/errors, evaluating impacts of problems on measurements and uses, and determining the appropriate corrective action(s).

4.3.2.5 When subcontracting any portion of this specified work, the VENDOR is required to invoke the applicable quality assurance program requirements on their supplier(s) and evaluate and qualify suppliers in accordance with these QA requirements. The BUYER reserves the right to verify the quality of work at the VENDOR's facility, including any supplier facilities.

4.3.2.6 Any items procured directly from a sub-supplier as a completed assembly (such as catalogue items) shall be in accordance with QA Clause B70.

4.3.2.7 All revisions to submitted calculations, as a result of comments by the BUYER or design changes by any sub suppliers, however minor, shall be resubmitted.

4.3.3 Electrical Equipment Requirements

4.3.3.1 Electrical equipment must be listed or labeled by a Nationally Recognized Testing Laboratory (NRTL) listed by Occupational Safety and Health Administration (OSHA); or equipment without a listing mark or label by a nationally recognized testing laboratory can only be approved for use if accepted by a BUYER designated NEC inspector in accordance with QA Clause B65.

4.3.4 Inspection and Testing

4.3.4.1 Inspections and testing including the documentation required by the contract shall be performed by qualified VENDOR Quality Control personnel or third party, who is independent of the work being performed. Quality Control personnel or third party shall be trained and qualified in accordance with the VENDOR's or third party approved QAP.

4.3.4.2 The VENDOR shall develop and submit work control documents (e.g., fabrication, inspection, and test plans) for items to be fabricated by the VENDOR or their lower–tier supplier in accordance with QA clause B13. The work control document shall delineate details for performing the fabrication including inspections and testing required by the contract. The BUYER will identify BUYER's required inspection points, include third party inspections, during review of the work control documents.

4.3.4.3 The VENDOR shall submit completed fabrication work control documents to BUYER for approval. The VENDOR shall perform a final acceptance review to verify that all steps have been completed and that required documentation (e.g., weld records, installation inspection reports, material inspection reports, pressure test reports, coating inspection reports, continuity resistance test, megger tests, etc.) has been included. Final acceptance shall be signified by signature and date on the work control document.

4.3.4.4 The VENDOR shall provide required notifications of verification points in accordance with QA Clause B16.

4.3.4.5 When BUYER's "hold" points are identified in the work control document, the VENDOR shall provide advance notification as specified in the contract documents.

NOTE: A BUYER's "hold" point may be waived by correspondence (e.g., e-mail) from the BUYER, which will be included with the work control document.

4.3.5 Receipt Inspection

4.3.5.1 VENDOR's procured permanent plant items shall be receipt-inspected by the VENDOR in accordance with their inspection plan prior to delivery to the work site. Items may be receipt-inspected at the site shops but prior to delivery at the installation area.

NOTE: Special receipt inspection requirements apply to VENDOR-procured items that are designated by the BUYER as FQA/EQA. See Section 4.4, Acceptance Criteria, of this section for details.

4.3.5.2 When VENDOR fabricates BUYER permanent plant items, the Fabrication Work Control Document shall identify the final inspection(s) necessary for the BUYER to accept the fabrication. The BUYER's inspection personnel shall perform final inspection(s). The BUYER's inspection personnel shall indicate final acceptance of the fabricated item on behalf of the BUYER. Normally, application of an acceptance tag will indicate acceptance and authorize the VENDOR to install the fabricated item.

4.3.5.3 When BUYER permanent plant items are provided, the VENDOR shall inspect and document all furnished items prior to accepting custodial responsibility. Discrepancies identified during inspection shall be immediately brought to the BUYER's attention. The inspection shall include as applicable:

- Labels, tagging and/or general identification of items.
- Quantity of items received.

- Any visible damage to packaging (e.g., water marks, oil stains, crushed container, etc.).
- Any visible damage to items (e.g., corrosion, scaling, cracks, broken pieces, obstruction or damage to rotating equipment, etc).
- Condition of visible coatings and/or paint.
- Protective covers and seals installed.
- Cleanliness of items.
- Verification of dimensional characteristics.

4.3.6 Noncompliances and Nonconformance

4.3.6.1 The VENDOR shall assure that services and processes that do not meet the requirements of the contract are identified, mitigated or controlled, and corrected. Noncompliances that have significant cost, schedule, quality, safety, health or environmental implications shall be investigated to determine the extent of the noncompliance and its causes.

4.3.6.2 The VENDOR shall verify that actions taken to correct noncompliances are complete and adequate to prevent recurrence. The relevant responses, actions required, verifications, and other documentation shall be transmitted to BUYER upon closure.

4.3.6.3 The VENDOR shall either correct nonconforming items immediately, or control them to prevent inadvertent use, installation, or testing.

4.3.6.4 The VENDOR shall control nonconforming items by segregating affected items in a clearly identified and designated hold area, marking or tagging the items to indicate they are nonconforming, or instituting other measures approved by BUYER.

4.3.6.5 The VENDOR shall notify BUYER whenever nonconforming items cannot be restored to their original, specified condition (i.e., nonconformance dispositioned "REPAIR" or "USE-AS-IS").

4.3.6.6 In selected cases, nonconforming items may be conditionally released for work or installation provided the nonconforming condition is not affected and the corrective action can still be performed. The BUYER shall be notified of such cases to authorize a conditional release. Otherwise, nonconforming items shall not be released until corrective actions have been completed and verified.

4.3.7 VENDOR Procurement of FQA items/Materials

4.3.7.1 When FQA items or materials are available from an evaluated supplier on VENDOR's Evaluated Supplier List (ESL), the procurement must be conducted strictly in the following manner.

A. The FQA item or material must be available from a supplier listed on the VENDOR's ESL.

B. The FQA items or materials must be within the scope of provision of the ESL supplier, as indicated on the ESL (e.g., pipe is provided by pipe suppliers, not by structural steel suppliers).

4.3.7.2 When the FQA item or material is not available from a supplier on the BUYER's ESL, the FQA item or material must undergo a commercial grade item dedication. The VENDOR shall be responsible for dedicating FQA items or materials under their own QA program.

To facilitate the procurement of items or materials that are intended to be dedicated, the VENDOR must submit their proposed procurement document to the BUYER for approval before ordering, in accordance with the following.

A. Critical characteristics for the item or material shall be formally identified on a BUYER-provided form (A-6002-544). A CGI dedication plan shall be prepared by the VENDOR and approved by the BUYER prior to VENDOR ordering items or material to be dedicated.

B. The VENDOR submits for BUYER approval a proposed procurement document specifying the FQA item or material, the intended supplier, the Quality Assurance requirements, the BUYER's safety classification, the procurement QA clauses to be invoked, and acceptance criteria at receipt.

4.3.8 Suspect/Counterfeit Parts

Items furnished for this subcontract shall not include Suspect/Counterfeit Items (SCI) in accordance with QA clause B76.

4.3.9 Measuring and Test Equipment

4.3.9.1 Measuring and Test Equipment (M&TE) shall be properly calibrated, maintained, and controlled in accordance with QA clauses B12 and B14.

4.3.9.2 Perform calibration at specified intervals based on the type of equipment, required accuracy, frequency of use, stability characteristics, and other conditions affecting performance. Calibration shall have accuracy traceable to national standards (where they exist), and calibration standards shall have the accuracy to ensure that the M&TE will have the required tolerances. Maintain records and mark equipment to show calibration status.

4.3.9.3 When M&TE is found to be out of calibration, the VENDOR shall have a method to identify its use since the last calibration and methods to re-verify acceptability of items previously tested.

4.4 Acceptance Criteria

A. All design, fabrication, and testing shall meet or exceed the acceptance criteria contained in this Specification and referenced codes and standards. Deviations from acceptance criteria shall be reported and resolved as described below.

B. The identification and definition of quality levels for LAWPS design & fabrication is provided on the DPDs, and equipment data sheets.

C. Methods used to accept an item or service shall be a Certificate of Conformance, source inspection, receipt inspection, Factory Acceptance Test (FAT), or post installation test on site, or a combination of these methods.

Certificate of Conformance shall be in accordance with QA clause B79 and the following requirements:

1. The certificate shall identify the purchased material or equipment, such as by purchase order number.
2. The certificate shall identify the specific procurement requirements met by the purchased material or equipment, such as codes, standards, and other

specifications. The procurement requirements identified shall include any approved changes, waivers, or deviations applicable to the subject material or equipment.

3. The certificate shall identify any procurement requirements that have not been met, together with an explanation and the means for resolving the nonconformance.
4. The certificate shall be signed or otherwise authenticated by a person who is responsible for the quality assurance function and whose function and position are described in the VENDOR's Quality Assurance Program.
5. The certification system, including the procedures to be followed in filling out a certificate and the administrative procedures for review and approval of the certificates, shall be described in the VENDOR's Quality Assurance Program.
6. Means shall be provided to verify the validity of the VENDOR's certificates and the effectiveness of the certification system.
7. Verification of VENDOR's certificates and certification system shall be conducted at intervals commensurate with VENDOR's past quality performance.
8. In certain procurement actions that do not involve source verification, an item or service may be accepted from a VENDOR based on a receiving inspection and a VENDOR's Certificate of Conformance stating that the specified requirements have been met and any specific supplemental documentation, such as material certificates or reports of tests performed, may be required by procurement documents. Acceptance by this method is satisfactory when the item or service is of simple design and involves standard materials, processes, and tests.

4.5 Verification

A. Design verification shall be performed to ensure the design adequately meets design criteria, the design is technically adequate, and the design meets applicable requirements for quality, safety, and performance. The VENDOR shall have responsibility for the performance and documentation of all design verifications associated with this specification.

1. The equipment design shall be verified in accordance with the VENDOR's ASME NQA-1 compliant design verification procedures. The BUYER will review and approve the VENDOR's design in the submittal review process.

2. VENDOR's developed multiple-use and single use spreadsheets shall be developed and verified in compliance with VENDOR's ASME NQA-1 compliant calculation verification procedures.

4.6 Inspections and Tests

4.6.1 Factory Acceptance Test Plan and Procedures

1. VENDOR shall prepare a Factory Acceptance Test Plan and Test Procedures including, but not limited to requirements from Section 3.3.11, Valve Fabrication and Testing.

4.6.2 Factory Acceptance Test Report

VENDOR shall prepare a Factory Acceptance Test Report with the results of the Factory Acceptance Tests per the Factory Acceptance Test Plan.

4.6.3 Functional Test Plan and Procedures

VENDOR shall prepare a Functional Test Plan and Test Procedures to cover operability and performance tests using clean chloride free water for system operation. All functional testing shall be performed on the full valve assembly, including the respective actuator, shaft, and sleeves. Functional testing shall be performed on all three valve configurations, see Figure 3-1, Figure 3-2, and Figure 3-3. Testing shall include, but not be limited to the following:

1. Confirm all valves open and close over their full range without binding
2. For all automated valves record open and close times
3. Confirm position indicators visual and instrument show correct valve position.
4. Confirm air supply pressure regulator, solenoid valve and positioner operation
5. Confirm all gauges accurately measure.
6. Confirm that pressure maintenance valve isolates instrument air and maintains automated valve position using air accumulator.
7. Confirm seismic qualification requirements in Sections 3.3.11.14 and 3.3.16 are satisfied.

4.6.4 Functional Test Report

VENDOR shall prepare a Functional Test Report with the results of the Functional Test per the Functional Test Plan.

5 PREPARATION FOR DELIVERY

5.1 General

VENDOR shall receive, clean, package, store, preserve, handle, and ship Structures, Systems and Components to protect against physical damage, or any effect that would affect quality or cause deterioration at all times while items are located on the VENDOR's premises in accordance with ASME NQA-1-2008/2009A, Quality Assurance Requirements for Nuclear Facility Applications, Part II, Subpart 2.2. All components shall be classified as Level B Items. VENDOR shall submit a Packaging, Storage, Shipping, and Handling Plan (PSSH). The PSSH shall include all plans, procedures, and drawings that address how items will be packaged, stored, shipped, and handled in accordance with the requirements described throughout this specification and the in the QA clause B85, with the exception of topics covered by the Lift and Rigging Plan described in Section 5.6.

5.2 Preservation and Packaging

Methods of cleaning and preservation shall meet the requirements specified in ASME NQA-1. Cleaning - Flush filter interior and associated piping and valves with water for 2 minutes minimum, and until effluent is clean and contains no visible particulate matter. Flushing pressure shall not exceed maximum operating pressure of the component. Flushing water supply shall have sufficient capacity to produce a flow velocity of 4 to 6 ft/s in largest pipe size, with pipe full.

Each piece of equipment shall be completely drained of all liquid prior to shipment. VENDOR shall be responsible for all damage which occurs as a result of improper drainage.

The valve body, sleeve, extension spindle and shielding assembly are to be boxed and shipped completely constructed and assembled. The actuators are to be shipped boxed separately but in the same consignment as the valve assemblies. Packaging shall prevent excessive transportation loads from damaging the packaged equipment.

Contact With Different Metals - Any item containing or comprised of austenitic stainless steel or nickel based alloys shall be stored, handled, and constructed in a manner that prevents direct contact with materials such as carbon steel, lead, zinc, copper, mercury, halogenated material, low melting elements, and any chloride containing material.

5.3 Packing

Exterior package type shall provide the level of protection required based on the storage and environmental limits. Containers, crates and skids shall be used as the methodology for packaging.

A. All flanged openings, which are not provided with a permanent flange cover, shall be protected by a polyethylene blind flange and a full faced rubber gasket with a minimum thickness of 1/8 inch.
B. All equipment shall be sealed in accordance with Section 3.3.3.2.
C. Where temporary bracing is welded in place, remove by grinding and perform NDE in accordance with fabrication NDE requirements.
D. Small parts that are to be shipped loose shall be boxed and marked with the purchase order number of the equipment.
E. For stainless fabrication items used for sealing, packaging, and tagging shall meet the chloride content limitations as defined by BUYER.
F. Prior to packaging, items must be cleaned per cleaning procedures outlined in the PSSH.

5.4 Transportation and Storage

A. All components, unless specified otherwise in this section or related sections, shall be compatible with being transported by public roadway to contract specified destination. Items shall either be self-supporting or provided with packing and dunnage so as to ensure their stability and protection from damage.
B. Equipment shall be packaged, supported, and secured to the transport vehicle in a manner so it can withstand a 0.8g (forward) hard-braking stop, and rearward or lateral acceleration of 0.5g, as well as, shock and vibration loads associated with transportation. Calculations that demonstrate compliance with these requirements shall be included in the Packaging, Storage, Shipping, and Handling Plan (PSSH) described in Section 5.1. Note that this is the minimum requirement; if a supplier has more stringent requirements, the supplier's requirements shall be applied. Where equipment is braced internally, it shall be clearly marked to identify removal after installation.
C. Each unit shall be completely drained of all liquid prior to shipment. VENDOR shall be responsible for all equipment damage which occurs as a result of improper drainage and storage. Metal-seated valves shall be shipped in the closed position. Resilient seated valves shall be shipped in the open position.

5.5 Marking

A. Package marking shall follow the requirements of ASME NQA-1-2008/2009A and at a minimum shall appear on two sides of a container, preferably on one side and one end. Package markings shall be applied with waterproof ink or paint in characters that are legible.
B. When information relative to handling and special instructions is required, such information shall be preceded by the word CAUTION in letters that are at least 1/2 in. (12.7 mm), as permitted by package size. Alternatively, if tags or labels are used, they shall be affixed to the container using a waterproof adhesive, tacks where practical, or a corrosion-resistant wire.
C. Clearly mark partial deliveries of component parts of equipment to identify equipment and contents to permit easy accumulation of parts and to facilitate assembly.
D. Prior to shipment, all packages shall be clearly and suitably tagged to identify, at a minimum:

1. BUYER's name with destination address
2. VENDOR's name with return address
3. Package numbers showing the Purchase Order (PO) Number followed by the package number and the total number of packages
4. Package contents description
5. Weight of package
6. Center of gravity
7. Parts list (for each package)
8. Handling instructions (e.g., Fragile, Center of Gravity, Keep Dry, This Side Up, Sling Here, Do Not Freeze) and stacking limitations, as appropriate
9. Special instructions (Desiccant Inside, Special Inspection, Storage, Unpacking Restrictions, etc.) as appropriate
10. Marking of items not within a container, such as pipe, tanks, and heat exchangers, shall exhibit the above specified information in a location that is in plain unobstructed view. Marking may be applied directly to bare metal surfaces, provided it has been established that the marking material is not deleterious to the item.
11. If any hazardous chemicals are included with shipments, the transport vehicle shall display the relevant Department of Transportation labels/placards.

5.6 Handling

5.6.1 Lift and Rigging Plan

VENDOR shall provide a Lift and Rigging Plan to cover the lifting and handling instructions for each lifted item (entire package as well as individual items that are uncrated). The plan shall describe the lift points, special lifting devices and/or hardware needs, and lift diagrams. Lift diagrams shall be dimensioned drawings for each equipment/assembly indicating all dimensions and tools necessary for support, lift and

shipment of the lifted item. Tolerances for such dimensions shall be noted, either on the specific dimension or in general notes. Dimensions locating centers of gravity shall be generated by VENDOR calculation and shall be noted on the drawing, and the calculations shall be submitted with the drawings demonstrating that the requirements of this section have been satisfied. These drawings shall be provided with the PSSH described in Section 5.1.

5.6.2 Lifting Attachments and Equipment Design

The lifting attachment(s) on the equipment (lifting eyes, lugs, ears, etc.) shall be designed in accordance with the following procedure except ASME BTH-1 should be used to verify lifting lugs hole diameter compared to the shackle pin diameter (the D to d ratio). The design shall consider equipment orientation, i.e., horizontal to vertical.

A. Estimated Weight of item: Determine the dead weight of each item by calculation, or from indicated weight from a calibrated load measuring device reading (if available). For reference, describe how the weight information was obtained.

B. Weight Contingency Factor: Increase the estimated weight by a reasonable contingency factor to account for the uncertainty of differences between actual field conditions and the reference drawings. The recommended increases are: a) 15% or more as necessary, for vessels, pumps, and other items with voids that may contain liquid, b) 5% for items that are solid or for which void fill is already accounted for in the estimated weight.

C. Dynamic Lifting Force: Increase the resultant weight from Step B by 25% to account for dynamic loads from crane operations.

D. Design Weight: The weight to be used in the structural analysis is the weight from Step B (including contingency factor) multiplied by the 1.25 factor from Step C. In most cases, the design weight is the estimated weight times (1.05) times (1.25).

E. Material Properties: Use appropriate technical references, and provide reference to sources in calculations.

F. Evaluation of Stresses: Use the appropriate requirements to calculate stresses using the Design Weight. Current editions of Codes or other referenced documents should be used for the evaluation. Computer software may be used (provide as a minimum the program name, version/revision; include printout of input/output data; provide output traceability to the computer program and the input). The calculations should include the following items as a minimum:

1. Use Design Weight from Step D above.
2. Deleted
3. Use 45 degree minimum sling angle from horizontal for items with more than one pick point. An angle greater may be specified in the design and shown on the drawings to reduce the lateral load component. List the minimum sling length required to maintain the specified sling angle.
4. For multiple pick points: use 2 lift points if there are 2 total, use 3 lift points if there are 3 total, and use 3 lift points if there are 4 total to determine the force per pick point. Divide the Design Weight (from Step D above) by the number of pick points, at 45° or the specified angle, allowed for analysis. Note: This is applicable only if the weight is evenly distributed throughout the multiple pick points.

Determine adequacy of lifting points (vertical, horizontal and resultant loads, as appropriate).

5. Determine adequacy of welds.

G. Design Ratio: Determine the design ratios for the resultant stresses in each component. The design ratio is the allowable stress per AISC 360 divided by the calculated stress.

H. When a minimum design ratio is less than 1, either a more detailed analysis is required; the lifting point must be modified, repaired, or replaced; or the method of lifting changed. The revised detailed analysis or the analysis for the new lifting point (replacement or repaired) shall be included in the package.

I. Maximum Allowable Rated Capacity: Determine the Maximum Allowable Rated Capacity by multiplying the Design Weight (Step D) by the minimum design ratio obtained in Step 7.

5.6.3 Lift Point Marking

5.6.3.1 Lift points for packages and individual components shall be clearly identified.

5.6.4 Critical Welds

A. All critical welds shall be identified in the VENDOR's design media.

B. For the purpose of this requirement, critical welds are defined as those welds whose failure could result in loss of load or loss of load control.

C. All critical welds on lifting devices shall be full-penetration welds, if possible.

D. Critical welds shall have a visual examination to verify minimum weld size and quality in accordance with AWS D1.1, D1.6, or D14.1 as applicable.

E. Magnetic Particle Examination (MT) or PT shall be performed on all critical welds. NDE shall be performed in accordance with AWS D1.1, D1.6, or D14.1 as applicable.

5.6.5 Special Lifting Devices

Any special handling devices needed for assembly or installation shall be identified and supplied with the equipment. VENDOR provided structural and mechanical lifting devices shall meet the requirements of DOE/RL-92-36. All lifting devices shall be rated for outdoor service as defined in Section 3.2.7 Environment.

5.6.6 Below-the-Hook Device Markings

BTH lifting devices shall be provided with markings in accordance with ASME B30.20 and tags in accordance with DOE-RL-92-36. In addition to the requirements of ASME B30.20 and DOE-RL-92-36, the marking shall include Hanford drawing number (if applicable), special lifting instructions, and clearly indicate lifting attachments. The marking shall be in the form of a name tag, name plate, or other permanent marker.

5.7 Shipping

All equipment shall be shipped in accordance with the applicable DOT standards and Section 5.4 and in an orientation, ready for lifting. Additional handling of the equipment to orientate it for lifting is not acceptable.

5.7.1 Transport and Tie-Down Instructions

VENDOR shall provide instructions and diagrams for securing all shipping packages. Transportation tie-down points shall be identified on the equipment. Lift points shall not be used for tie-downs. Calculations will be required for the design of all transport tie-down attachment points.

5.7.2 Unpacking and Assembly Drawing

VENDOR shall provide a dimensioned drawing that includes receiving instructions, unpacking instructions, and on-site assembly instructions and directions for removal of temporary supports and clamping devices (if equipment is shipped in a disassembled state). These drawings shall be provided with the PSSH described in Section 5.1.

5.7.3 Offloading

Offloading at BUYER designated delivery site will be performed by the BUYER or a BUYER-designated representative.

6 NOTES

Not Used

SPECIFICATION

15-2-026

ASME PROCESS VESSEL SPECIFICATION

AECOM ATKINS AREVA

LOW ACTIVITY WASTE PRETREATMENT SYSTEM

Project No. 31269 (T5L01)

Document No. 15-2-026

Safety Related ☒ Non-Safety Related ☐

ASME PROCESS VESSEL SPECIFICATION

Prepared for

Washington River Protection Solutions, LLC

Revision: 0 Status: Final

LARRY E. ULBRICHT
STATE OF WASHINGTON
27921
REGISTERED
PROFESSIONAL ENGINEER

5/16/17

FOR PERMITTING
LEU
5/16/17

AECOM ATKINS AREVA

Project Number: 31269 (T5L01)
Doc. No.: 15-2-026
Date: May 16, 2017
Revision: 0

REVISION PAGE

Project Name:	LAWPS	**Discipline:**	Mechanical
Client:	Washington River Protection Solutions	**Project Number:**	31269 (T5L01)
		Latest Revision:	0

REVISION SIGNATURES

L. Ulbricht Larry Ulbricht Digitally signed by Larry Ulbricht Date: 2017.05.16 06:48:11 -07'00'		D. Skeath David Skeath Date: 2017.05.16 07:46:46 -07'00'	
Prepared by	**Date**	**Approved by (SDE/Lead)**	**Date**
B. Severson Brian Severson Digitally signed by Brian Severson Date: 2017.05.16 06:56:28 -07'00'		P. Bell Paul Bell Digitally signed by Paul Bell Date: 2017.05.16 08:48:55 -06'00'	
Checked by	**Date**	**Approved by (QA)** For DP	**Date**
S. Lin SiYuan Lin 2017-05-16 11:21:13		D. Priebe Michael Schultze Digitally signed by Michael Schultze Date: 2017.05.16 09:46:15 -06'00'	
Verified by (if required)	**Date**	**Approved by (PEM)**	**Date**

Status	Rev. No.	Date	Prepared By	Pages	Description of Changes
Final	0	5/16/17	L. Ulbricht	64	Approved for Bid

Safety Related: Yes ☒ No ☐	**Quality Level:** Full QA ☒ Enhanced QA ☐ Commercial QA ☐

TABLE OF CONTENTS

1.0 SCOPE 1

2.0 APPLICABLE DOCUMENTS 2

2.1 Government Documents 2
2.2 Non-Government Documents 2
2.3 Other Documents 3

3.0 REQUIREMENTS 4

3.1 Item Definition 4
3.1.1 Interface Definition 4
3.2 Characteristics 4
3.2.1 Safety Related Critical Characteristics and Performance Criteria 4
3.2.2 Physical Characteristics 4
3.2.3 Reliability 4
3.2.4 Maintainability 4
3.2.5 Environment 5
3.3 Design and Construction 5
3.3.1 Identification and Marking 5
3.3.2 Nameplate 5
3.3.3 Document Submittals 6
3.3.4 Parts/Materials/Processes 10
3.3.5 Equipment 12
3.3.6 Components 12
3.3.7 ASME Process Vessel Fabrication 12
3.3.8 Structural Support Steel 21
3.3.9 Shop Quality Control 23
3.3.10 Safety Seismic Design Requirements 27
3.3.11 Non-Safety Seismic Design Requirements 32

4.0 QUALITY ASSURANCE REQUIREMENTS 33

4.1 Requirements 33
4.1.1 General Requirements 33
4.1.2 Additional Requirements for FQA Items 35
4.2 VENDOR Design 35
4.2.1 General Requirements 35
4.2.2 Additional Requirements for FQA Items 35
4.3 Verification 36
4.3.1 General Requirements 36
4.3.2 Additional Requirements for FQA Items 36
4.4 Inspection and Testing 36
4.4.1 General Requirements 36
4.4.2 Additional Requirements for FQA Items 37
4.5 Receipt Inspection 37
4.5.1 General Requirements 37
4.6 Noncompliances and Nonconformance 38

4.6.1 General Requirements 38
4.7 VENDOR Procurement of Items/Materials 38
4.7.1 General Requirements 38
4.7.2 Additional Requirements for FQA Items 39
4.8 Suspect/Counterfeit Parts 39
4.9 Measuring and Test Equipment 40
4.9.1 General Requirements 40
4.10 Acceptance Criteria 40
4.10.1 General Requirements 40

5.0 PREPARATION FOR DELIVERY 41
5.1 General Requirements 41
5.2 Preservation and Packaging 41
5.3 Packing 42
5.4 Marking 42
5.5 Handling 43
5.5.1 Lift and Rigging Plan 43
5.5.2 Lifting Attachments 43
5.5.3 Lift Point Marking 44
5.5.4 Critical Welds 44
5.5.5 Special Lifting Devices 44
5.5.6 Below-the-Hook Device Markings 45
5.6 Transportation and Storage 45
5.7 Shipping 45
5.7.1 Transport and Tie-Down Instructions 45
5.7.2 Unpacking and Assembly Drawing 45
5.7.3 Offloading 45

6.0 List of Appendices 46
Appendix A – Cesium Product Tank 202LP-CSA-ECS-TK-200 ..... A-1
Appendix B – Lead IX Break Tank 202LP-IXA-IX-TK-210 ..... B-1
Appendix C – Lag IX Break Tank 202LP-IXA-IX-TK-211 ..... C-1
Appendix D – Treated Waste Delay Tank 202LP-IXA-IX-TK-300 ..... D-1
Appendix E – Lag Storage Tank 202LP-LSA-LAG-TK-301 ..... E-1
Appendix F – Lag Storage Tank 202LP-LSA-LAG-TK-302 ..... F-1
Appendix G – Lag Storage Tank 202LP-LSA-LAG-TK-303 ..... G-1

LIST OF TABLES

Table 3-1 Fabrication Traveler Hold Points 23
Table 3-2. LAWPS Free Field (Ground Surface Level) Response Spectrum 29
Table 3-3. Response Modification Coefficients for Seismic Design of SDC-1 and SDC-2 SSCs 32
Table 4-1 Procurement Quality Clauses 34

LIST OF FIGURES

Figure 3-1 Acceptable Nozzle Connections 14
Figure 3-2 Unacceptable Nozzle Connections 14
Figure 3-3 Integral Nozzle Reinforcement Methods 15

LIST OF TERMS

Abbreviations and Acronyms

Term	Definition
AISC	American Institute of Steel Construction
ANSI	American National Standards Institute
ASCE	American Society of Civil Engineers
ASME	American Society of Mechanical Engineers
ASTM	American Society for Testing and Materials
AWS	American Welding Society
B&PVC	Boiler and Pressure Vessel Code
BNL	Brookhaven National Laboratory
CGD	Commercial Grade Dedication
CGI	Commercial Grade Item
CMTR	Certified Materials Test Report
CQA	Commercial Quality Assurance
DCN	Design Change Notice
DOE	Department of Energy
DOT	Department of Transportation
DPD	Design Proposal Drawing
ECN	Engineering Change Notice
EQA	Enhanced Quality Assurance
ESL	Evaluated Suppliers List
FAT	Fabrication Acceptance Testing
FCAW	Flux Cored Arc Welding
FQA	Full Quality Assurance
GMAW	Gas Metal Arc Welding
GTAW	Gas Tungsten Arc Welding
IBC	International Building Code
ISRS	In-Structure Response Spectra
LAWPS	Low Activity Waste Pretreatment System
LS	Limit State
M&TE	Measuring and Test Equipment
MAWP	Maximum Allowable Working Pressure

Term	Definition
MDMT	Minimum Design Metal Temperature
MDS	Mechanical Datasheet
MSR	Master Submittal Register
NBIC	National Board Inspection Code
NDE	Nondestructive Examination
NPS	Nominal Pipe Size
PFI	Pipe Fabrication Institute
PO	Purchase Order
PPM	Parts per Million
PQR	Procedure Qualification Record
PSSH	Packaging, Storage, Shipping and Handling Plan
PWHT	Post Weld Heat Treatment
QA	Quality Assurance
QAP	Quality Assurance Program
RC	Risk Category
RFI	Request for Information
RRS	Required Response Spectrum
SAW	Submerged Arc Welding
SCI	Suspect/Counterfeit Items
SDC	Seismic Design Category
SMAW	Shielded Metal Arc Welding
SRSS	Square Root of the Sum of Squares
SSC	Systems, Structures, & Components
USA	United States of America
WPQ	Welder Performance Qualification
WPS	Welding Procedure Specification
WRC	Welding Research Council

Units

U.S. customary units shall be used for all deliverables including, but not limited to, calculations, drawings, data sheets and specifications.

Abbreviation	Unit
in	inch
F	Fahrenheit
g	acceleration due to gravity
Hz	Hertz
ppm	Parts per million

Definitions

BUYER – The company for whom the VENDOR is performing work or services.

COMMERCIAL QUALITY ASSURANCE (CQA) – Level of controls for those items, services, or processes where, based on an evaluation of risk or nuclear safety, no additional quality controls beyond the providers published or stated attributes of the item, service, or process is required.

DESIGN CHANGE – Within the context of this specification, a DESIGN CHANGE is technically equivalent to a SUBSTITUTION (see SUBSTITUTION). However, the term DESIGN CHANGE may be used to refer to more significant changes to the design compared to a simple substitution.

DEVIATION – any departure from the requirements contained in the purchase order and specification which VENDOR proposes to incorporate if approved by BUYER.

ENHANCED QUALITY ASSURANCE (EQA) – Level of controls for those items, services, or processes where, based on an evaluation of risk or nuclear safety, additional controls beyond the provider's published or stated attributes of the item, service, or process are needed to verify critical attributes.

FULL QUALITY ASSURANCE (FQA) – Level of controls applied for items services, or processes that are commensurate with the controls invoked under ASME NQA-1 or other appropriate national consensus standard.

HANDLING – The movement or transportation of items following receipt from offsite/ project locations. This includes movement within storage areas and movement/transportation from receipt or storage areas to field locations. Handling requirements include the need for special handling tools and equipment, restrictions on material composition of surfaces in contact with the item, protection against damage or deterioration, which could occur during movement and placement, protection against physical damage due to excessive shock or vibration, and protection against entry of dirt, water, or other contaminants.

HOLD POINT – A mandatory inspection activity beyond which work shall not proceed until (1) the inspection is performed by an independent inspector and/or BUYER and acceptance is authenticated, or (2) a written release is authorized by the organization who established the hold point.

MORE CONSERVATIVE – "More conservative" shall be interpreted as "more protective of the health, safety and well-being of Site workers and facilities, the public, and environment, as applicable."

NONCONFORMANCE – a deficiency in characteristic, documentation or procedure that renders the quality of an item or activity unacceptable or indeterminate.

PROCUREMENT QUALITY CLAUSES (QA Clauses) – Procurement quality clauses are used for the acquisition of items and services. The clauses establish contractual obligations for quality program systems, identification, traceability, document submittals, testing, reporting, qualification, special process controls, inspections, etc.

PRODUCT DATA – Printed information including, but not limited to, catalog cuts, color charts, illustrations, diagrams, templates, performance curves, brochures, and other forms of Product literature.

QUALITY ASSURANCE RECORDS – Quality assurance plans, procedures, and records, including completed documents that furnish evidence of the quality of an item or activities affecting quality.

RATED LOAD – The maximum load that can be lifted by the device.

SHALL / MUST – Denotes project requirements, compliance is required.

SHIPPING – The movement of items from an off-site/project location (VENDOR, warehouse, etc.) to an on-site/project location, or movement from an onsite/ project location to an off-site/project location. Shipping requirements include packaging and securing of items to protect against damage or deterioration which could occur during movement and transportation, protection against physical damage due to excessive shock or vibration, protection against entry of dirt, water, or other contaminants, and protection against other environmental conditions such as temperature or humidity.

SHOULD – Denotes recommendation or expectation, compliance is expected.

SPECIFICATION – Refers to any design, fabrication or supply specification.

STORAGE – Holding of items in areas that address: the probable maximum period to be held, the inherent physical limitations of the item itself, and required protection from potential hazards such as fire, corrosion, chemical attack and environmental conditions. Storage also includes the requirements for maintaining the integrity and operability of items through routine maintenance, cleaning, or other means of preservation.

SUBSTITUTION – Any change or deviation from issued approved drawings, designs, methods, or contract terms and conditions. Changes in products, materials, equipment, methods of construction, and test criteria required by the Contract Documents proposed by the VENDOR after award of the Contract are considered to be requests for substitution.

VENDOR – The Company responsible for the supply of equipment or services.

VESSEL – As used in this specification, means either an atmospheric tank or a pressure vessel.

WITNESS POINT – An inspection activity beyond which work shall not proceed until an inspector and/or BUYER is notified and (1) the inspection is performed and released, or (2) the inspection is deferred and can be completed at a later time, or (3) a written waiver is issued by the organization who established the witness point.

1.0 SCOPE

This specification applies to the process vessels required for the Low Activity Waste Pretreatment System (LAWPS) project. This specification provides requirements for the design, fabrication/construction, examination, inspection, testing, packaging, storage, lifting, and shipping, for the American Society of Mechanical Engineers (ASME) vessels as identified in the following sections and associated mechanical datasheets (MDSs) and design proposal drawings (DPDs).

The scope of the services identified in this specification encompasses Safety Significant (Full Quality Assurance) and Non-Safety (Enhanced Quality Assurance) items. The quality level of each item is identified on the MDSs and the DPDs.

VENDOR shall assume complete responsibility for the design, fabrication, inspection, testing, handling, and shipping, including all documentation as required by BUYER and detailed in the purchase order and this specification. BUYER's review of VENDOR's drawings, or release of the items for shipment by BUYER's representative, shall in no way relieve VENDOR of the responsibility for complying with all the requirements of this specification and the purchase order.

The BUYER shall be advised immediately in writing of any conflicts as soon as they are identified. No substitutes or deviations to this specification will be allowed without written approval from BUYER.

Preferably, vessels will be shop fabricated and delivered to the LAWPS site by VENDOR and installed by BUYER. VENDOR may perform vessel fabrication, inspection, and testing within an on-site or an adjacent near-site designated vessel construction area using shop fabricated sections to the extent possible.

2.0 APPLICABLE DOCUMENTS

Work shall be performed in accordance with the referenced codes, standards, and documents for this specification

The following documents, of the exact issue shown, form a part of the BUYER basis of design to the extent specified in the applicable sections of this document. In the event of a conflict between documents referenced herein and the requirements of this specification, the requirements of this specification shall take precedence only when this specification's requirements are more stringent or conservative. If a code or standard not listed below is to be applied to the scope (see Section 1.0), apply the latest code or standard as of April 16, 2015.

2.1 Government Documents

- DOE Order 414.1D, 2011, *Quality Assurance*
- DOE/RL-92-36, Release 80 (2016), *Hanford Site Hoisting and Rigging Manual*

2.2 Non-Government Documents

- AISC 360, 2010, *Specification for Structural Steel Buildings*
- AISC N690, 2012, *Specification for Safety-Related Steel Structures for Nuclear Facilities*
- AISC, 14th Edition, *Steel Construction Manual*
- ASCE 4-98, 2000, *Seismic Analysis of Safety-Related Nuclear Structures and Commentary*
- ASCE 7, 2010, *Minimum Design Loads for Buildings and Other Structures*
- ASCE 43, 2005, *Seismic Design Criteria for Structures, Systems, and Components in Nuclear Facilities*
- ASME BTH-1, 2014, *Design of Below-the-Hook Lifting Devices*
- ASME B&PVC- Section II, *Materials, 2013 Edition*
- ASME B&PVC Section V, *Nondestructive Examination, 2013 Edition*
- ASME B&PVC-Section VIII, *Rules for Construction of Pressure Vessels, Division 1, 2013 Edition*
- ASME B&PVC- Section IX, *Welding, Brazing, and Fusing Qualifications, 2013 Edition*
- ASME NQA-1, 2008 and 2009A, *Quality Assurance Program Requirements for Nuclear Facility Applications*
- ASTM A193/A193M, 2014, *Standard Specification for Alloy-Steel and Stainless Steel Bolting Materials for High Temperature or High Pressure Service and Other Special Purpose Applications*
- ASTM A194/A194M, 2014, *Standard Specification for Carbon and Alloy Steel Nuts for Bolts for High Pressure or High Temperature Service, or Both*
- ASTM A240/A240M, 2015, *Standard Specification Chromium and Chromium-Nickel Stainless Steel Plate, Sheet, and Strip for Pressure Vessels and for General Applications*
- ASTM A262, 2015, *Standard Practices for Detecting Susceptibility to Intergranular Attack in Austenitic Stainless Steels*
- ASTM A276, 2015, *Standard Specification for Stainless Steel Bars and Shapes*

- ASTM A312/A312M, 2015, *Standard Specification for Seamless, Welded, and Heavily Cold Worked Austenitic Stainless Steel Pipes*
- ASTM A370, 2014, *Standard Test Methods and Definitions for Mechanical Testing of Steel Products*
- ASTM A380, 2013, *Standard Practice for Cleaning, Descaling, and Passivation of Stainless Steel Parts, Equipment, and Systems*
- ASTM A480, 2014, *Standard Specification for General Requirements for Flat-Rolled Stainless and Heat-Resisting Steel Plate, Sheet, and Strip*
- ASTM F436, 2011, *Standard Specification for Hardened Steel Washers*
- AWS A4.2M, 2006, *Standard Procedures for Calibrating Magnetic Instruments to Measure the Delta Ferrite Content of Austenitic and Duplex Ferritic-Austenitic Stainless Steel Weld Metal*
- AWS D1.6/D1.6M, 2007, *Structural Welding Code – Stainless Steel*
- BNL-52361, 1993, *Seismic Design and Evaluation Guidelines for the Department of Energy High-Level Waste Storage Tanks and Appurtenances*
- IBC, 2012, *International Building Code*
- NBBI NB 23 (NBIC), 2015, *National Board Inspection Code*
- PFI Standard ES-24, 2013, *Pipe Bending Methods, Tolerances, Process and Material Requirements*
- WRC-297, 1984, *Local Stresses In Cylindrical Shells Due To External Loadings On Nozzles-Supplement to WRC Bulletin No. 107*
- WRC 537, 2010, *Precision Equations and Enhanced Diagrams for local Stresses in Spherical & Cylindrical Shells due to External Loadings for Implementation Of WRC Bulletin 107*

2.3 Other Documents

- TFC-BSM-IRM_DC-C-07, Rev A-7, *Vendor Processes*
- TFC-ESHQ-Q_C-C-03, REV C-13, *Control Of Suspect/Counterfeit Items*
- *Incoming Letter of Transmittal*, A-6005-315
- *Request for Information/Request for Clarification of Information (RFI)*, A-6003-417
- A-6002-544, *Commercial Grade Dedication Form*

3.0 REQUIREMENTS

The technical requirements of the scope of work are covered by this specification and the associated datasheets and drawings listed in the appendices.

3.1 Item Definition

The physical configuration and the operating and design parameters for the vessels are identified in their associated DPDs and vessel data sheets included as attachments to this specification. Each of the process vessels associated with this specification are in one of the following three categories:

- Safety Significant, Full Quality Assurance (FQA), Pressure Vessel (U-stamped)
- Safety Significant, Full Quality Assurance, Atmospheric Tank
- Non-Safety, Enhanced Quality Assurance (EQA), Atmospheric Tank.

3.1.1 Interface Definition

Physical interfaces are as identified in DPD drawings and associated vessel support or anchorage embed drawings. Mechanical layout drawings are provided for general information.

3.2 Characteristics

3.2.1 Safety Related Critical Characteristics and Performance Criteria

Safety Designations are defined on the MDSs or DPDs. Documentation requirements associated with the vessel classification are as specified in procurement documentation. Vessel safety requirements shall be satisfied by performing design and fabrication in accordance with the requirements specified in the MDSs, DPDs, and procurement documentation.

3.2.2 Physical Characteristics

The vessels covered by this specification are process vessels used in the LAWPS system for storage and treatment of liquids classified as radioactive and hazardous. The vessel dimensional characteristics shall be constrained by the limits defined in the associated DPD.

3.2.3 Reliability

Vessels and non-maintainable / non-removable internal features shall be designed and fabricated for a 40 year design life. Corrosion and erosion allowance requirements are provided on the MDSs or DPDs.

3.2.4 Maintainability

Vessels are non-maintainable. Construction access features and other features shown on the DPDs will provide access to facilitate remote internal visual inspection via camera.

3.2.5 Environment

The vessels will be operated with the process conditions provided on the vessel data sheets and be installed in shielded and ventilated concrete pits or vaults. The vessels are not subject to outdoor environmental conditions other than for delivery and temporary storage (assume outdoor storage up to 1 year). Site storage conditions should be noted as they may exceed normal operating conditions.

Normal Vault/Pit Conditions:
Temperature Range: 60°F to 120°F
Relative humidity: 0 to 100%.

Faulted Vault/Pit Conditions:
Temperature range: 34°F to 111°F
Relative humidity: 0 to 100%.

Delivery/Outdoor environmental conditions are provided for information:
Temperature range: -25°F to 115°F (direct sunlight)
Relative humidity: 0 to 100%.

NOTE: Faulted HVAC conditions are the equilibrium temperature range that will occur in the event of a prolonged HVAC outage. While the equipment will not operate during a prolonged HVAC outage, it shall be designed to withstand any additional thermally induced loads.

3.3 Design and Construction

The vessels shall be designed and constructed per the requirements of this specification, associated drawings and data sheets.

3.3.1 Identification and Marking

3.3.1.1 Vessel lifting points, center of gravity and the lifting weight shall be clearly marked.

3.3.2 Nameplate

3.3.2.1 The ASME B&PVC Section VIII nameplate shall include, as a minimum, the following:

- Equipment Identification Numbers as specified on the vessel data sheet
- Year constructed
- MAWP (Maximum Allowable Working Pressure)
- MDMT (Minimum Design Metal Temperature)
- Material of construction
- Weight of the vessel assembly, including internals and all permanently welded/fixed supports.
- U stamp, as applicable.

3.3.2.2 The ASME B&PVC nameplate shall be installed in the location identified on the DPD by continuous weld around the perimeter of the nameplate. Additional

manufacturer's nameplate, if any, shall be installed in like manner and adjacent to the ASME B&PVC nameplate. The nameplate shall be constructed of 300 series stainless steel compatible with the vessel shell material.

3.3.3 Document Submittals

3.3.3.1 General

This section provides the general procedures and requirements for preparing and processing engineering, design, fabrication, testing, and other submittals. This section only identifies the typical types of submittals required. The actual submittals are defined in the Master Submittal Register (MSR) accompanying this specification.

A. Refer to TFC-BSM-IRM_DC-C-07, "Vendor Processes," for BUYER submittal process.
B. For each formal submittal (regardless of document type), VENDOR shall complete transmittal letter A-6005-315, provided by BUYER.
C. The VENDOR shall track and record delivery and review status of submittals by maintaining a submittals list and retaining copies of Submittal Forms and letters of transmittal, itemizing delivered items and reports during the course of the work. Records shall be retained until construction completion. Notes or markings added by hand shall be legible, utilizing permanent non-smearing marking media, such as ink or felt tip markers, in a contrasting color. An alternate means of recording delivery may be used with BUYER approval.
D. Requests for Information (RFI) shall be submitted on form A-6003-417 (provided by BUYER).

3.3.3.2 Quality Assurance Submittals

The following Quality Assurance (QA) submittals shall be submitted as identified on the MSR.

A. Quality Assurance Program for Design Fabrication, including Suspect/Counterfeit Items in accordance with QA Clause B76.
B. Calibration Certificates and calibration records for all instruments used by the VENDOR in accordance with QA Clause B12.
C. Design software verification and validation report (for FQA vessels), shall be provided in accordance with QA Clause B15. Where computer program software is used for calculations, each calculation shall include a brief program description of the software, including the name and version of the program software. If the program software is not commercially available to industry, VENDOR shall maintain and provide, upon request, program software documentation.
D. Spreadsheet calculations using commercial off-the-shelf software shall have support documentation provided in accordance with the QA Clause B18.
E. Quality Assurance Program for Nonconformance Documentation and Reporting in accordance with QA Clause B22.
F. Certified Weld Inspector qualification records, in accordance with QA Clause B25.
G. Welding Procedures and Qualifications, in accordance with QA Clause B28.
H. Nondestructive Examination (NDE) Weld Inspector qualification records, in accordance with QA Clause B31.

3.3.3.3 Preliminary Design Review Package

VENDOR shall submit a preliminary design review package. This package shall include the following as identified on the MSR:

A. Preliminary Calculations for the vessel, internal and external attachments, and supports. Calculations shall include code and nozzle calculations, seismic calculations, calculations for attachments, and fatigue analysis, as applicable. Vessel operational stresses shall be limited to less than 50 percent of the material yield stress.
B. Preliminary Drawings for the vessels providing dimensions, item definition, materials specifications, weld callouts and details, seam locations, internal and external attachments, internal support details, and fabrication tolerances. These drawings need to provide enough detail to show a conceptual layout, including internals and interface dimensions.
C. Preliminary vessel data sheets that include vendor information and design and operating parameters.
D. Preliminary requirements compliance matrix.

3.3.3.4 Final Design Review Package

VENDOR shall submit a final design review package. This package shall include the following as identified on the MSR:

A. Calculations justifying the vessel design. Calculations shall include, but not be limited to:
   - Code calculations. Design calculations shall include relevant ASME B&PVC Section VIII, Division 1 formulas and source paragraphs, values used in the formulas, the calculated results and comparison with acceptable values. Vessel operational stresses shall be limited to less than 50 percent of the material yield stress. Calculations shall address thermal and discontinuity stresses as applicable. Where calculations are based on other than the ASME B&PVC Section VIII, Division 1 formulas, the source of the formulas shall be referenced.
   - Seismic calculations including base horizontal seismic force and moment inclusive of fluid induced impulsive and convective forces, and loads for anchorage design.
   - Support calculations including empty weight, operating weight and location of center of gravity
   - Calculations associated with lifting and tailing lugs, and special below-the-hook lifting devices, as applicable.
   - Nozzle load analysis for local and gross effect, per WRC 297 and WRC 537.
   - Design of attachments; internal, external, lifting, tie downs, and anchorage.
   - Fatigue analysis as applicable for vessels in fatigue service.

B. Design details of each welded joint uniquely identifying the parts joined by the weld. In some cases the use of AWS welding symbols, properly annotated, and applied to the fabrication drawings will suffice for this requirement.
C. A dimensional drawing for the pressure vessel, indicating all dimensions necessary for supporting, lifting, and shipping of the completed vessel.

Tolerances held for such dimensions shall be noted, either on the specific dimension or in general notes. Dimensions locating centers of gravity which are generated by calculation shall be so noted on the drawing, and the calculations shall be submitted with the drawings.

D. Detail Drawings. Detail drawings shall give a complete dimensional and material definition of every part designed and fabricated specifically for the vessel and shall be in sufficient detail to satisfy the BUYER that the quality level of all components are correctly defined. Parts available commercially with standard dimensions (i.e. – standard forgings, flanges, etc.) shall be identified by manufacturer and part number.

E. Drawings including lifting and handling drawings, shipping drawings, and drawings of special lifting and handling equipment, as applicable

F. Vessel data sheets that include vendor information and design and operating parameters.

G. Requirements compliance matrix.

3.3.3.5 Fabrication Authorization Submittals

For each vessel included in the contract, the order shall include timely delivery of the following documents as identified in the MSR prior to BUYER's release to purchase the materials and/or to commence fabrication of vessels impacted by the particular document:

A. Overall fabrication work plan and schedule.

B. Fabrication/Inspection/Test Plans (Travelers) in accordance with QA Clause B13 prior to starting fabrication work. VENDOR shall submit completed Travelers as soon as the work and documentation are complete.

C. An approved Quality Item Procurement Commercial Grade Dedication (CGD) Survey, as applicable. For full quality assurance (FQA) items, the VENDOR shall meet the requirements of the BUYER's CGD plan.

D. List of fabrication codes and standards.

E. Non-destructive examination procedures and NDE written practice, in accordance with QA Clause B31.

F. Weld maps identifying each weld joint by weld number on each vessel, applicable weld procedure, and NDE requirements.

G. Weld procedures and welding procedure specifications (WPSs) covering each weld, in accordance with QA Clause B28, and applicable procedure qualification records (PQRs) for all welds.

H. Liquid penetrant material certifications. A certification in accordance with QA Clause B46 for penetrant materials shall be submitted for BUYER approval prior to fabrication.

I. Material control procedures. All submittals and records pertaining to the NDE, base materials, filler materials, fabrication, and inspection shall be traceable by heat number to the area and part inspected and be accessible for BUYER's examination. Material control shall include performance of positive material identification (PMI). The welded joints and components shall undergo PMI testing. The VENDOR shall perform PMI examination of the finished weld on the one point of each joint inside and outside for all weld joints. When access is not

possible to the inside weld and/or weld size is small, examination of the outside of a weld only shall be acceptable. PMI shall be performed for the following low alloy / stainless steel / high allow materials:

- Low alloy steel containing more than 1 Cr – 0.5Mo and/or 3.5 Ni
- Type 316/316L stainless steel
- Type 321/347 stainless steel
- 11-13% Cr (Type 410/410S/40S)

3.3.3.6 Other Submittals

Vendor shall submit the following plans and documents as identified in the MSR:

A. Cleaning plan.
B. Packaging, Storage, Shipping, and Handling (PSSH) Plan in accordance with QA Clause B85.
C. Lifting and rigging plan.
D. Factory acceptance test (FAT) plan

3.3.3.7 Final Data Package

VENDOR shall prepare and submit a final data package. Final Data Package shall be approved by the BUYER prior to release for shipment (or for site construction, upon completion of work). Inspections and test reports shall be in accordance with QA Clause B52. This package shall include the following as identified on the MSR:

A. Fabricator's Certificate of Conformance, in accordance with QA Clause B79.
B. Signature Verification sheet.
C. Receiving Inspection Reports.
D. VENDOR's Certificate of Conformance for Commercial Grade Surveyed Procurements in accordance with QA Clause B80.
E. Certified Material Test Reports (CMTRs) (including chemical and physical properties test results, and heat treat condition and corrosion test results as defined in the applicable Mechanical Datasheets (MDSs) or DPDs), in accordance with QA Clause B49.
F. All submittals and records pertaining to the nondestructive examination (NDE), base materials, filler materials, fabrication, and inspection; submittals and records shall be traceable to the area and part inspected.
G. Certified copies of the test reports, per QA Clause B52, including ASME B&PVC Section VIII, Division 1, U-1 data reports and National Board Inspection Code (NBIC) forms for pressure vessels as specified in the purchase order.
H. Liquid Penetrant Material Certification in accordance with QA Clause B46.
I. Fabrication Travelers in accordance with QA Clause B13.
J. Weld Inspection Reports.
K. Weld Maps showing welder's symbol (stamp) for each weld, and location of radiographic tests and weld repairs.
L. Weld History Reports including list of welders and welder symbol.
M. Nondestructive Examination Reports in accordance with QA Clause B31.
N. Calibration Certificates in accordance with QA Clause B12
O. Dimension Verification Reports (including critical dimensions).
P. Fastener Tightening Reports, as applicable.

Q. Factory Acceptance and Pressure Test Procedures.
R. Factory Acceptance and Pressure Test Reports.
S. Flushing Records: including a water test report and records verifying acceptable completion of flushing.
T. Lift Test Records with weight certifications
U. Final Inspection Report
V. Requirements compliance matrix demonstrating compliance with specification requirements.
W. Miscellaneous Inspection Reports.
X. Non Conformance Reports (closed). Nonconformance documentation and reporting shall be in accordance with QA Clause B22.
Y. Manufacture's/VENDOR's data (i.e., data sheets, material cut sheets, operation & maintenance manuals, etc.) in accordance with QA Clause B33.
Z. Test reports for ASTM A262, Practice A tests as applicable.
AA. Request for Information (pertinent to the fabricated assembly).
BB. Approved Design Changes – Engineering Change Notices (ECN's) & Design Change Notices (DCN's).
CC. Detailed As Built Drawings.
DD. Final calculations of as-built condition.
EE. Completed vessel data sheets.
FF. PWHT charts

3.3.4 Parts/Materials/Processes

Vessels, including structural steel attachments and framework shall be fabricated from 300 series stainless steel (grade as specified on data sheets and DPDs). Certified Material Test Reports (CMTRs) are required for all alloy and stainless steel materials used, including weld filler material.

3.3.4.1 General Requirements

A. Materials shall be as specified on the MDS or DPDs.
B. Material standard editions dated within the previous 10 years from the date of Subcontract award are permissible, as long as VENDOR verifies that the physical and chemical properties of material meet the requirements of the cited standard editions.
C. Material substitutions shall not be made without BUYER approval. Unless otherwise stated by the VENDOR in the substitution-related RFI, a substitution request constitutes a representation that the VENDOR:

   i. Has investigated the proposed product or material and determined that it meets or exceeds the form, fit, function, and quality level of the specified product; and
   ii. Will provide the same warranty for the substitution as for the specified product.

D. Materials shall be new, free from defects, and traceable to a CMTR. Classification of fabrication materials shall be in accordance with ASME B&PVC Section VIII. VENDOR shall furnish legible copies of the CMTRs from the manufacturer for all FQA components and materials comprising the primary

containment, supports, weld filler material, and welded attachments, including temporary attachments welded to the vessel.

E. Pipe fittings shall conform to the appropriate ASME and ANSI standards for materials and dimensions unless otherwise stated in the purchase order.

F. Attachment point of spiders, braces, or other temporary attachments shall match the material of the vessel.

3.3.4.2 Welding Materials

A. Austenitic stainless steel (P-No. 8) welding materials for pressure boundary and load bearing welds shall contain a minimum delta ferrite content of five percent. The maximum ferrite content shall not exceed 12 % for post weld heat treatment (PWHT) applications. Compliance with the minimum and maximum ferrite requirements may be based upon the certified chemical analysis and the Welding Research Council (WRC) Delta Ferrite Diagram or a ferrite gage complying with AWS A4.2. Alternatively, for Shielded Metal Arc Welding (SMAW) electrodes and solid wire filler metal manufactured in the USA, a CMTR may be used to confirm acceptability of the ferrite requirements.

B. Certified Material Test Reports are required for all filler materials. Certified Material Test Reports for gas shielded consumables shall reflect that testing was done with the same gas (gas mixture) as used in production.

C. The storage, handling, baking and drying of all welding consumables (i.e., covered electrodes, flux cored electrodes and fluxes) shall be as recommended by the manufacturer. Segregation of carbon steel, low alloys, and alloy consumables is required during storage, baking, holding, and handling (including portable ovens), and in the fabrication area

D. Shielding and purging gases shall be welding grade, having a dew point of less than or equal to (-) 40°F. Certificates of Analysis of the gas purity shall be provided.

3.3.4.3 Contact Materials

A. Contact materials shall be controlled and documented in accordance with VENDOR's inspection and test plan as approved by BUYER.

B. Contact materials including marking materials, temperature indicating crayons, adhesive backed and pressure sensitive tape, and barrier and wrap materials may be used only under the following limits:
   - The total halogen content shall not exceed 200 parts per million (PPM).
   - The total sulfur content shall not exceed 400 PPM.
   - No intentionally added low melting point metals such as lead, zinc, copper, tin, antimony and mercury.
   - Anti-spatter compounds shall not contain chlorine, fluorine, sulfur, mercury or other low melting point metals.
   - Materials and residue shall be completely removed when no longer required.
   - Cleaning materials may be non-halogenated solvents or potable water containing no more than 50 PPM chloride.
   - Marking materials and liquid penetrant materials used on austenitic stainless steels and nickel base alloys shall not cause corrosive or other harmful effects. A certification in accordance with QA Clause B46 for penetrant materials shall

be furnished for each batch number of penetrant, cleaner, developer and emulsifier and shall include the test results that meet requirement of ASME B&PVC Sec V Article 6 and latest mandatory addendum. CMTRs for penetrant materials shall be submitted for BUYER approval prior to fabrication.

3.3.5 Equipment

The vessels associated with this specification are defined on supporting MDSs & DPDs identified in the Contract. Preferably, vessels will be shop fabricated and delivered to the LAWPS site by VENDOR and installed by BUYER. If necessary, VENDOR will perform vessel construction, inspection, and testing within an on-site or adjacent near site designated vessel construction area, and delivery to the LAWPS site; and BUYER will perform installation of vessels.

For on-site erected/fabricated vessels, VENDOR will be responsible for site preparation as specified in the procurement documents. Coordination with the General Construction Contractor will be required for items and activities regarding mobilization/demobilization, site safety, site access, site security, work schedules, and use of equipment and services provided by the General Construction Contractor.

3.3.6 Components

Any special equipment necessary to lift or handle the vessel shall meet the requirements in Sections 5.5.4 through 5.5.6 and shall be included with delivery of the vessel.

3.3.7 ASME Process Vessel Fabrication

VENDOR is responsible for all activities associated with fabrication, inspection, testing, and storage of site erected vessels. VENDOR is responsible for providing and installing any temporary supports/items required for lifting, handling, and transport. Unless otherwise specified in procurement documents, VENDOR is responsible for all activities associated with transportation of vessels to the LAWPS construction site, including loading and offloading the transporter. Unless otherwise specified in procurement documents, BUYER is responsible for installation of the vessels, including removal of temporary supports/items, vessel mounting and anchorage, and nozzle connections.

3.3.7.1 General Requirements

A. VENDOR shall substantiate any proposed changes to the MDSs, DPDs, specifications, and purchase order, and obtain approval from BUYER prior to any changes being made.
B. Unless otherwise specified, all vessels shall be designed and fabricated in accordance with ASME B&PVC Section VIII, Division 1, requirements of this specification, the MDSs, DPDs, and the referenced drawings provided in the Contract.
C. Where defined on the MDSs or DPDs, pressure vessels shall be U stamped and registered in accordance with the National Board Inspection Code (NBIC) (NBBI NB23). VENDOR shall provide U-1 Form and NBIC forms as deliverables.

D. VENDOR shall consider design details, dimensions and material thickness shown on DPDs and MDSs as reference information. VENDOR shall provide design and specify applicable materials, dimensions, and thicknesses as required to meet code requirements.
E. If the MDSs or DPDs contain equipment cyclic data, VENDOR shall provide fatigue evaluation in accordance with ASME B&PVC Section VIII Division 1 Part UG-22.
F. Unless indicated otherwise on the MDSs or DPDs, VENDOR shall design the vessels to support process liquid filled to the top of the overflow. If no overflow is identified the vessel shall be assumed completely full. VENDOR shall utilize the process liquid density as stated on the MDSs or DPDs.
G. VENDOR is to confirm the vessel internal piping, components, and supports account for the loads imposed by the agitation of the process fluid. The design shall consider the loads with respect to excessive vibration which may cause premature failure of the vessel pressure boundary or internal supports.
H. VENDOR shall provide vessel supports as illustrated on the DPDs. For lug supported vessels, locally increasing the thickness of the shell or head with an insert plate may be required to comply with loading.
I. All welding shall be continuous. Stitch welding is prohibited.
J. Where practical, internal structural component welds shall be full penetration. Fillet welded attachments are subject to approval by BUYER.
K. All internal and external supports, support rings, pads, and structural brackets attached to the vessel shall be seal welded all around to prevent corrosion between the vessel and attachments. When seal welding all around is not practical, provision for drainage shall be made: e.g., a gap in the low- point weld and the proposed design submitted to the BUYER for approval. These welds shall be included in the weld map.
L. Pulled bends shall be specified in preference to using piping fittings; piping bends shall have a minimum bend radius of five times the piping diameter (5D), unless specified otherwise. Where 5D pipe bends are not practical, VENDOR may submit for approval, use of 3D bends or long-radius pipe fittings.
M. Vessel plate materials shall have a 2B surface finish per ASTM A480.
N. Austenitic stainless steel material exposed to the process fluid shall exhibit no chromium carbides or detrimental intermetallic phases as demonstrated by testing and accepting a minimum of one specimen per heat treatment lot in accordance with ASTM A262, Practice A.
O. Stainless steel surfaces shall not be coated.

3.3.7.2 Nozzles and Manways

A. At a minimum, nozzle wall thickness shall be per ASME B&PVC Section VIII, Division 1, unless a greater thickness is specified on the DPDs. VENDOR shall understand that minimum nozzle thicknesses indicated on the DPDs may not support the nozzle loading requirements specified on the MDSs or DPDs. VENDOR shall increase nozzle wall thickness or provide recommended design changes to meet the nozzle loading specified on the MDS or DPDs.
B. Nozzles, manways, and their reinforcements located on the head shall be located fully within the crown region of the head unless noted otherwise on the DPDs.

C. Figure 3-1 and Figure 3-2 illustrate acceptable and unacceptable nozzle configurations and welding for pressure vessel shells and heads. This does not apply to openings in vessel skirts.
D. All nozzles shall be set-in type or through type with full penetration welds as shown in Figure 3-1. All nozzles that are flush with the inside surface of the vessel shall be rounded to 1/8 inch minimum radius as shown in Figure 3-1.
E. Nozzles for pressure relief devices, vents, and drainage shall be flush with the inside surface of the vessel. Nozzles with internal projection in primary containment shall have an additional fillet weld between the internal projection and the inside surface of the shell or head.
F. Flange bolt holes shall straddle natural vessel centerlines unless otherwise specified.

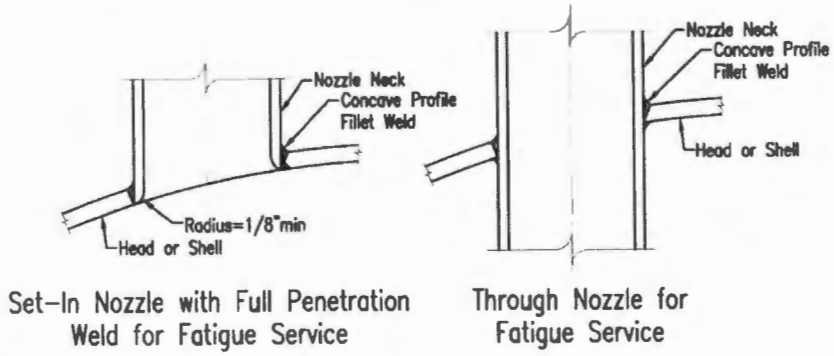

Figure 3-1 Acceptable Nozzle Connections

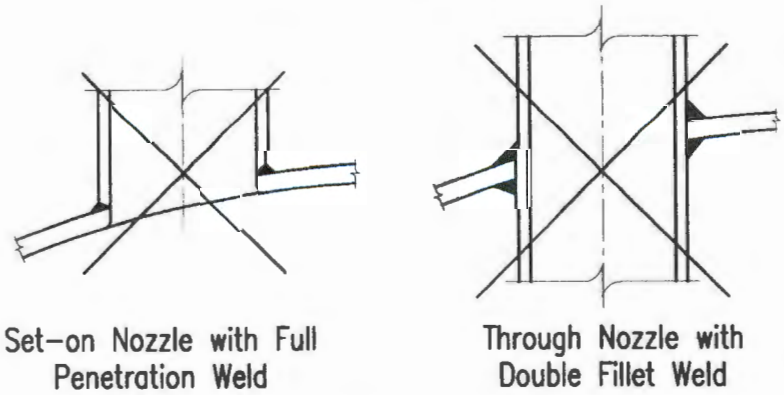

Figure 3-2 Unacceptable Nozzle Connections

G. The minimum nozzle design loads by nozzle size, for operating loads, weight, seismic and thermal expansion cases area as specified in the MDSs or DPDs. Loads act at the juncture of the nozzle and shell.
H. Nozzles shall be designed for the loads specified on the MDS. Primary nozzle load combinations to be considered in the design shall be:

Weight + (Seismic or Wind) + Operating Pressure + Operating Loads

Secondary nozzle load combinations to be considered in the design shall be:

Primary Loads + Thermal

I. Unless otherwise identified, the design loads specified in the MDSs or DPDs represent the minimum loads to be used for nozzle design.
J. VENDOR shall design nozzles according to the methods of WRC 297 & WRC-537, or BUYER approved analysis as applicable.
K. The nozzle loads specified in the MDSs or DPDs are for the piping connected to the external nozzle. If a nozzle is loaded internally to the vessel, whether due to operating loads or seismically induced fluid loads, design the nozzle for the sum of the internal and external loads.
L. If the wall thickness of the nozzle neck is greater than that of the connecting piping, the requirements of ASME B&PVC Section VIII, Division 1, Figure UW 13.4 shall be satisfied.

3.3.7.3 Nozzle Reinforcement

Nozzle reinforcement shall be integral, as shown in Figure 3-3 regardless of Quality Level.

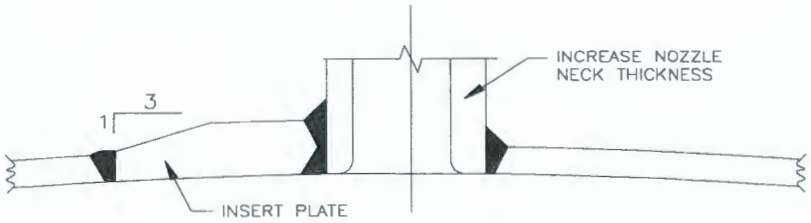

Figure 3-3 Integral Nozzle Reinforcement Methods

3.3.7.4 Internal Components

A. Design of vessel internal components and support members for vessel internals shall be the responsibility of VENDOR. Internal supports shall use welded connections exclusively; no bolted connections.
B. VENDOR shall submit a preliminary layout for review prior to detail design for internal equipment and piping, including proposed support methods.
C. Design of internal components such as wash rings, sparge nozzles, stilling wells, thermowells, etc., shall consider agitation loads on vessels with mixing systems. The design of internal supports shall also consider stresses caused by differential thermal expansion, seismic loads, and transportation of the vessel in horizontal or vertical orientation, as applicable. The nozzles and internals shall be analyzed for effectiveness of design. The MDSs or DPDs will define agitation requirements.

D. VENDOR shall design support members to avoid the column of space directly below the manway, inspection nozzles, instrumentation nozzles, and equipment nozzles. The support design shall also provide adequate clearance from operating equipment such as agitators and pumps.
E. If indicated on DPDs, the internal surface of the head or shell subjected to direct impingement of process fluid shall be protected by a wear plate. See the MDSs or DPDs for the wear plate material.
F. VENDOR shall install interfacing features to accommodate agitator installation, mounting, seismic restraint, and mixing (e.g., baffles, vortex break, etc.) as specified on the DPDs. VENDOR shall confirm these interfacing features with BUYER and identify details on drawings submitted for BUYER approval.
G. VENDOR shall apply corrosion/erosion allowance to both internal and external surfaces of internal components and piping as defined on the MDSs or DPDs.

3.3.7.5 External Components

A. Lifting and tailing lugs shall be provided and installed by VENDOR unless noted otherwise on BUYER DPDs.
B. VENDOR is responsible for determining the necessity of stiffening rings per ASME B&PVC Section VIII. Division 1, Part UG-29. The material shall match the material of the shell and attachment welds shall be continuous on both sides of the ring.
C. If specified on the DPDs, VENDOR shall provide and install support clips for site installed external piping or platforms.
D. VENDOR shall provide and install grounding lugs.
E. The materials welded to the shell shall match the material of the shell.

3.3.7.6 Seismic Design

A. VENDOR shall provide seismic design qualification analysis per the process vessel's classification. The seismic design loads and acceptance criteria for the vessels, anchorage, and internal supports shall be correlated to the requirements in Section 3.3.10, Safety Seismic Design Requirements or Section 3.3.11, Non-Safety Seismic Design Requirements, as applicable.
B. The seismic design shall include impulsive and convective fluid induced loads per ASCE 4-98, as applicable.
C. Vessel nozzles shall be designed for the seismic loads specified in the MDSs or DPDs in accordance with the vessel classification.

3.3.7.7 Fabrication

A. General Requirements

i. VENDOR shall, if necessary, provide temporary stiffening and jigging to prevent shell distortion during fabrication, welding processes, heat treatment, hydrostatic testing, and shipping. Temporary stiffening and jigging not required for shipping shall be removed before shipping. For stiffening and jigging that is welded in place, remove by grinding and perform NDE in accordance with fabrication NDE requirements.

ii. Fabrication tolerances shall be in accordance with ASME B&PVC Section VIII, Division 1, the Vessel DPDs, BUYER vessel standard details and any other applicable drawing defined in the contract documents.

iii. The sequence of fabrication shall be planned to permit maximum access to the internal surfaces to enable examination of all welds.

iv. Plates in the descaled condition shall be free from damage, staining, or any form of contamination.

v. Plates and pipes shall be cut to size and shape by machining, grinding, shearing, plasma, laser, or water jet cutting. Plates, 3/8 inch thick and above, cut by shearing, shall either be liquid penetrant tested on the sheared edge or have 3/8 inch allowance left on the edges which shall be removed by machining or grinding. All thickness of plate or pipe cut by air plasma cutting shall have the edges dressed to a smooth, bright finish. Material cut by the inert gas shielded plasma, laser or water jet process will not require further dressing other than de-burring. All lubricants, burrs, and debris shall be removed after cutting.

vi. All stamps used for identification reference markings shall be of the low stress type. Stampings shall not be located near discontinuities.

vii. If a butt welded seam is required between materials of different thickness, the thicker material shall be machined or ground on the side away from the process liquid. Machining shall ensure a smooth finished profile with no sharp corners and shall be in accordance with ASME B&PVC Section VIII, Division 1.

viii. When rolling any austenitic stainless plate, care shall be taken to prevent carbon pickup or contamination of rolled material. The work area shall be free of carbon steel grindings and general cleanliness shall be maintained to preclude carbon contamination.

ix. Only stainless steel brushes, clean iron-free sand, ceramic or stainless steel grit shall be used for cleaning stainless steel or nonferrous alloy surfaces. Cleaning tools or materials shall not have been previously used on carbon steel.

x. Pipe bending methods, tolerances, processes, and material requirements shall comply with Pipe Fabrication Institute (PFI) Standard ES-24 and require BUYER's approval. These requirements shall apply equally to tube bending processes. The pipe shall not be terminated or butt welded within the bend; a straight length of 6 inches is recommended.

xi. All temporary attachments shall be removed prior to shop hydrostatic test unless specifically approved by BUYER.

B. Layout Requirements

i. Plate size shall be chosen to minimize welding. For horizontal vessels, the longitudinal seams in cylindrical shells and conical heads shall be located above the specified normal operating level, where practical. Longitudinal seams shall be completed before welding any adjoining circumferential seam.

ii. The longitudinal seams of adjacent shell courses shall be staggered by a minimum length (measured from the toe of the welds) of 5 times the plate

thickness, or 4 inches whichever is greater. Where it is considered impractical to meet this requirement, VENDOR shall submit a proposed layout to BUYER for approval.

iii. Special attention must be paid to large diameter formed heads, where two or more plates are butt welded prior to forming. Butt welds shall be located such that the weld in the knuckle region is minimized. VENDOR shall submit complete weldment details of large diameter formed heads to BUYER for approval.

iv. Plate layouts shall be arranged so that longitudinal and circumferential weld seams clear all nozzles, manways, and their limits of reinforcement. Additionally there must be a clearance of at least eight times the shell plate thickness between the toes of the affected welds. Any exception to this requirement will require BUYER's approval.

v. Structural attachment welds such as internal support rings or clips, external stiffening rings, insulation support rings, and ladder, platform or pipe support clips shall clear weld seams by a minimum of 2 inches. If overlap of pad type structural attachments and weld seams is unavoidable, the portion of the seam to be covered shall be ground flush and examined by radiography before the attachment is welded. The seam shall be radiographed per ASME B&PVC Section VIII, Division 1, Part UW-51 for a minimum distance of 2 inches beyond the edge of the overlapping attachment. Radiographic examination of longitudinal weld seams is not required when single plate edge type attachments such as tray support rings, stiffening rings, insulation support rings, ladder, platform, or pipe support clips cross such weld seams.

C. Nozzles and Manways

i. For forged nozzles connecting to pipe of lesser wall thickness, VENDOR shall prepare the nozzles per ASME B&PVC Section VIII, Division 1 Figure UW-13.4.

ii. For shell openings specified with a welded cover (i.e., manways or inspection nozzles), the cover shall be tack welded to the manway neck, prepared for field welding to the manway neck and sealed to prevent dirt and water from entering the vessel using adhesive tape which meets the requirements of Section 3.3.4.3, "Contact Materials." The cover shall be marked with the plant item number of the vessel.

iii. Nozzles to be butt welded in the field shall be suitably extended and capped for hydrostatic testing. After testing, the caps shall be removed and the nozzle shall be prepared for field welding. The finished length shall be as stated on the DPDs.

D. Welding Requirements

i. All welds, including those for non-pressure parts and attachments, including temporary attachments, welded to pressure boundary components, shall be made by welders, welding operators, and welding procedures qualified under the provisions of ASME B&PVC Section IX. The responsibility for welding to be used in ASME B&PVC construction rests with VENDOR.

ii. VENDOR's responsibility includes the following documents which shall be available for use by the welders/welding operators and for reference by BUYER:
   - WPS suitable to the need.
   - PQR documenting proof of the weldability of the variables described in the WPS.
   - Welder Performance Qualification (WPQ) documenting proof of the welder's ability to deposit sound weld metal within the range of WPS parameters being used.
   - Welder Qualification Continuity log.

iii. All weld joints for pressure retaining applications shall have a minimum of two passes.

iv. Where joints are welded from both sides, the first pass shall be backchipped, ground or arc-gouged to sound metal before welding the second side. This requirement shall be stated on the WPS.

v. Peening shall not be used. The use of pneumatic tools for slag removal is not considered peening.

vi. Each layer shall be completed prior to starting the next layer (no block welding).

vii. Vertical welding shall be vertical up unless approved otherwise by BUYER for each specific application.

viii. For clad (or weld overlaid) plate, the following limitations apply:
   - The cladding shall be stripped back a minimum of 1/4 inch from the edge of base material bevels by machining or grinding, not by flame or arc gouging. The removal shall not reduce the base material thickness below the design thickness. The method of verifying complete removal from this area shall be submitted for review.
   - Overlay weld metal shall not be used for joining base metals to each other. Local repair cavities in overlay deposits that penetrate into the base material more than 10 percent of its thickness or 3/16 inch, whichever is less, shall have the base material re-welded with welding materials having properties consistent with the base material before completing the overlay repair.

ix. All attachments such as lugs, brackets, nozzles, pads and reinforcements around openings and other members (when permitted) shall follow the contour and shape of the surface to which they will be attached. The gap at all exposed edges to be welded shall not exceed the greater of 1/16 inch or one-twentieth of the thickness of the attachment at the point of attachment.

x. Joints shall be assembled and retained in position for welding. The use of manipulators or other devices to permit welding in the flat position should be employed where practical.

xi. Temporary welds including tack welds shall be made by qualified welders using qualified weld procedures.

xii. All low alloy, stainless steel alloy and nickel alloy welds shall be back purged with Argon. The purge shall be maintained until three layers or 3/16 inch of

deposit has been welded. Purging applies to all welds, including fillet welds and temporary attachments.

xiii. Misalignment (high-low) in butt joints shall conform to the applicable ASME B&PVC requirements. Block welding and bridging is prohibited.

xiv. When welds are overlaid, each layer and the adjacent metal shall be cleaned to remove all surface discoloration prior to deposition of the next bead. This requirement also applies to the addition of Stellite alloy to the Vessel interior. Stellite overlays if required will be defined on the DPDs. Overlay and cladding procedures are to be approved per ASME B&PVC part UCL.

E. Welding Process Limitations

i. Root Pass of Single Side Butt Welds without Backing (Open Butt). Only the following welding processes may be used and are subject to the limitations listed.

- Shielded Metal Arc Welding (SMAW)
  - Impact test temperature not less than -20°F, if applicable.
- Gas Tungsten Arc Welding (GTAW)
  - Back purge two layers minimum for 2-1/4 Cr -1 Mo alloys and higher
  - Gas Tungsten Arc root passes for 2-1/4 Cr-1 Mo alloys and higher
- Gas Metal Arc Welding (GMAW)
  - Only pulsed spray or spray transfer may be used
  - GMAW short arc is prohibited

ii. All Welding Except Root Passes for Open Butt. Only the following welding processes may be used and are subject to the limitations listed.

- Shielded Metal Arc Welding (SMAW)
  - Filler metal number F1 is not permissible for pressure retaining welds.
  - Filler metal number F4 is permitted for all welds.
- Gas Tungsten Arc Welding
  - Addition of filler metal is required (dry washing is prohibited)
- Gas Metal Arc Welding
  - GMAW-P — Pulsed axial spray transfer — No Limitations.
  - Continuous spray transfer — No Limitations.
  - For nominal pipe sizes (NPS) less than 6 inch, wherever possible all shop welding shall be rotated.
- Flux Cored Arc Welding (FCAW)
  - Arc shielding gas is required for pressure retaining welds.
  - Self-shielding FCAW consumables are prohibited.

- Submerged Arc Welding (SAW)
  - Neutral flux (no active or alloy constituents) is required.
  - Run on/run off tabs shall be used where possible.
  - Unfused used fluxes shall not be reused.

F. Preheat and Interpass Temperatures

i. Preheat temperature shall be in accordance with the applicable Codes except that Code recommended minimum preheat temperatures shall be mandatory. Preheat requirements shall apply to all welding, including tack welding and welding of temporary attachments. Preheat requirements also apply to all thermal gouging and cutting operations. Preheat shall be maintained a minimum of 3 inches on either side of the joint.

ii. For welds requiring preheating, the weld joint shall be completed with no intermediate cooling. Cooling under an insulating blanket is permitted provided that at least 30 percent of the joint depth has been filled and that applicable documents do not specify more stringent requirements.

iii. The interpass temperature for austenitic stainless steels and nickel base alloys shall not exceed 350°F, or lower if as defined by welding rod manufacturer, except that for the hard facing of low carbon austenitic stainless steels, the interpass temperature shall not exceed 800°F.

iv. Preheat shall be determined by temperature indicating crayons, contact pyrometers or other equally suitable means. Temperature indicating crayons used on austenitic stainless steels and nickel base alloys shall not cause corrosive or other harmful effects. It is VENDOR's responsibility to determine suitable brands that may be used. This information shall be made available to BUYER's representative if requested.

v. If oxy-fuel torches are used for preheating, the torch tip shall be appropriate for the work (i.e., a "rosebud," not a cutting or welding tip).

G. Post Weld Heat Treatment (PWHT)

i. PWHT shall be performed in accordance with ASME B&PVC Section VIII.

ii. Direct impingement by furnace burner flames is not permitted.

iii. Only resistance, induction, furnace, or quartz lamp heating methods are permitted. Exothermic heat treatment shall require prior written authorization by BUYER.

iv. When local PWHT is performed, all attachment areas, including areas from which attachments have been removed, shall be included.

v. The PWHT process shall be recorded using calibrated chart recorders. PWHT charts shall be provided in the Final Data Package.

3.3.8 Structural Support Steel

3.3.8.1 Structural Steel Materials

Stainless steel (non-pressure retaining and not in contact with process liquid) furnished as bulk material or delivered as fabricated assemblies shall be as follows unless otherwise noted on the design drawings, except for vessels:

A. Shapes and Bars: Conform to ASTM A276, Type 316/316L.
B. Plates: Conform to ASTM A240, Type 316/316L.
C. Pipe: Conform to ASTM A312, Grade TP 316/316L.
D. Bolts: Conform to ASTM A193, Grades B8 or B8M, Class 1.
E. Nuts: Conform to ASTM A194, Grade 8 or 8M, heavy hex.
F. Studs: ASTM A276, Nitronic 60 as shown on DPDs.
G. Washers: Cut from plate Conforming to ASTM A240, type 304 or 304L, or machined from bar stock that meets ASTM A193, B8 or B8M, Class 1. Dimensions in accordance with ASTM F436.
H. Welding Filler Metal: Conform to AWS D1.6

3.3.8.2 Shop Fabrication for Structural Steel

A. Fabricate enhanced quality assurance (EQA) and general services structural steel items in accordance with the AISC 360, AISC Manual of Steel Construction; and the requirements of this specification. Structural steel items that are full quality assurance (FQA) shall be fabricated in accordance with the additional requirements of ANSI/AISC N690.
B. Substitute sections or modification of design details shall be permissible only with the Buyer's written approval prior to fabrication.
C. Welding shall be performed in accordance with AWS D1.6.
D. Inspection and examination of welds shall be in accordance with AWS D1.6.
E. Welding Filler Material shall meet the quality standards of and be supplied in accordance with AWS D1.6 and the following additional requirements:
   - Control shall be established and implemented, with objective evidence through supplier's records, to ensure that only correct and accepted items and materials are used. Consumed filler material lot or heat numbers shall be documented on one or more of the following record: drawings, weld map, shop travelers, inspection reports, etc.
   - The VENDOR shall submit an inspection plan covering the inspections to be performed on weld filler metal for Buyer's review. VENDOR shall submit their Material Control Procedure for controlling, issuance, handling, storage, and traceability for welding metals.

3.3.8.3 Bolts

A. All bolts required for erection shall be in clearly marked containers and included with the first shipment of fabricated steel for each unit or structure unless alternate shipping methods are authorized, in writing by the BUYER.
B. All bolting materials shall be CMTR certified and controlled in accordance with QA Clause B73.
C. Refer to Section 4.8, Suspect/Counterfeit Parts.
D. Assembly using stainless steel fasteners shall include the use of approved anti-galling compounds.

3.3.9 Shop Quality Control

All quality provisions applicable to shop fabricated vessels are applicable to site erected vessels. Additional provisions shall be specified in fabrication processes and procedures as applicable to site environmental conditions, including wind, precipitation, and temperature extremes

3.3.9.1 General Requirements

A. Each layer of welding shall be smooth and free of slag inclusions, porosity, excessive undercut, cracks and lack of fusion prior to beginning the next layer. In addition, the final weld layer shall be free of coarse ripples, non-uniform bead patterns, high crown, and deep ridges to permit the performance of any required inspection. All arc strikes, starts, and stops shall be confined to the welding groove or shall be removed by grinding. Welds containing defects shall be locally repaired.

B. Temporary attachments shall be removed and areas finished smooth with the vessel shell. Surface NDE, in addition to visual examination, shall be performed to ensure no defects have been generated.

C. The test for maximum hardness of the deposited weld metal, if required, shall be made after any required heat treatment. If the weld fails to meet the acceptance criteria and either of two subsequent adjacent tests exceeds the specified hardness, the weld shall either be replaced or re-heat treated and retested. The hardness requirement applies to the weld metal exposed to the process fluid. When not accessible, the opposite side shall be tested. Hardness readings shall be taken with a portable tester in accordance with ASTM A370.

D. Each weld shall be stamped with the welder's unique symbol or number identification using low stress stamps. Any alternative method of marking shall be submitted for BUYER approval.

3.3.9.2 Hold Points

A. VENDOR shall provide required notifications of verification points and shall not proceed past required hold points without written authorization from BUYER QA representative. Table 3-1: Fabrication Traveler Hold Points, lists the minimum hold points to be incorporated into the fabrication traveler.

Table 3-1: Fabrication Traveler Hold Points

Initial Production Welding (First Weld)	Hold
Prior to Testing	Witness
Prior to Inspections	Witness
Prior to Acceptance Testing	Hold
Prior to Final Inspection	Hold
Prior to Shipping	Hold

3.3.9.3 Shop Inspection General

A. The VENDOR shall prepare a detailed fabrication and inspection and test plan, including insertion of BUYER designated source inspection/witness hold and notification points. The VENDOR shall be responsible for performing and documenting compliance with all relevant specification, drawings and related standards.
B. The VENDOR shall develop, submit for BUYER review, and implement a procedure to dimensionally inspect all critical dimensions (i.e. dimensional inspections shall be within specified dimensional tolerances) as outlined on the DPDs. The procedure shall identify the type of measuring devices to be used and the method and frequency with which they will be calibrated. The VENDOR shall dimensionally inspect each item prior to final assembly of the components. Dimensional inspection documentation shall be included in the required document package.
C. Impact testing shall be performed on base metal and weld joints in accordance with ASME B&PVC Section VIII requirements, as applicable.

3.3.9.4 Non-Destructive Examinations

A. Radiography is the preferred method of NDE and shall be specified where possible. Where it is considered impractical to perform radiographic examination due to joint configuration, VENDOR may propose ultrasonic examinations for BUYERS consideration.
B. The following welds shall be subject to NDE as specified:
   - All welds forming part of the primary containment, including weldments joining nozzles to the vessel shell or head shall be 100% inspected using radiography.
   - Where a main seam butt weld is located such that only part of its length lies within the Primary Containment, the complete length of that particular seam shall be inspected.
   - For multi-chambered vessels, where an adjacent chamber is categorized other than FQA or EQA, all interconnecting butt welds which provide Primary Containment between the two chambers shall be inspected to FQA and EQA.

C. All butt welds in internal piping shall be 100% volumetrically inspected.
D. Where components attach to any part of the vessel by full or partial penetration tee weld (including a corner weld), the parent plate in the vicinity of the weld shall be ultrasonically tested prior to welding, to ensure that no defects are present that could result in laminar type tearing during welding.
E. The following full penetration component welds shall be ultrasonically examined:
   - Supports for vessel internals
   - Vessel supports where a small local area of the vessel takes the support load (Ultrasonic Inspection is not required for skirt or ring supported vessels).

F. The shell and head sections which are subjected to concentrated or large loads through welded attachments (such as lifting and tailing lugs or agitator

mountings) shall be ultrasonically examined over 100% of the area prior to welding, in accordance with the following:

- For connections or attachments directly welded to the shell or head, the area tested shall extend 3 inches beyond the extremity of the proposed weldment
- For connections or attachments welded via a reinforcement or doubler plate, the shell area tested shall extend 5 inches beyond each side of the perimeter of the proposed fillet weld attaching the reinforcing or doubler plate to the shell or head

G. If fillet welds are permitted by BUYER they may be dye-penetrant tested in lieu of radiographic or ultrasonic testing with approval from BUYER.
H. Records of the NDE and other tests shall be submitted to BUYER as defined in Section 3.3.3, Document Submittals.
I. All welds joining the nozzle neck to the shell or heads, that are not radiographed or ultrasonically tested shall be liquid penetrant tested.
J. Radiography, ultrasonic testing, and liquid penetrant examination, where specified or required, shall be performed in accordance with ASME B&PVC Section VIII, Division 1 and ASME B&PVC Section V. NDE procedures shall be submitted to BUYER for review and approval prior to fabrication.
K. Visual weld inspections shall be performed by certified weld inspectors in accordance with QA Clause B25.
L. Ultrasonic testing, where specified by BUYER or proposed by VENDOR, shall be in accordance with Appendix 12 of ASME B&PVC Section VIII, Division 1.
M. Radiographic acceptance criteria shall be in accordance with ASME B&PVC Section VIII, Division 1, Paragraph UW-51 where full radiography is required or UW-52 where spot radiography is required.
N. Pipe bends shall be examined by UT to confirm wall thicknesses are within prescribed parameters.

3.3.9.5 Hardness Testing For Austenitic Stainless Steel

A. Hardness testing is required when austenitic stainless steel plate is cold formed to make sections such as angles and channels. This requirement is not applicable to the cold forming of dished heads, which is covered by the relevant section of ASME B&PVC Section VIII, Division 1.
B. Hardness testing is required when austenitic stainless steel pipe is cold formed for bends with a centerline radius less than three times the nominal pipe diameter.
C. Any cold forming process, which may significantly increase hardness, shall be in accordance with an approved procedure, which contains hardness testing. The procedure shall be submitted for BUYER's approval.
D. Hardness testing shall be performed on areas subject to the greatest deformation after cold working or any rework or rectification; the maximum permitted hardness shall not exceed that allowed by the applicable material standard and grade.
E. If the maximum permitted hardness is exceeded, VENDOR shall perform PWHT per Section 3.3.7.7.G, Post Weld Heat Treatment

3.3.9.6 Acceptance Testing

A. Hydrostatic Test
- The hydrostatic test shall be performed after acceptance of all required NDE and any specified leak tests.
- The vessel hydrostatic test shall be performed in accordance with ASME B&PVC, Section VIII, Division 1, Part UG-99 as specified on the MDSs or DPDs.
- All welds shall be sufficiently cleaned and free of scale or coatings prior to hydrostatic testing.
- Testing of vessels or components made of austenitic stainless steel materials shall be conducted with potable water containing no more than 50 PPM chloride.
- The final hydrostatic test pressure shall be held for a minimum of one hour.
- Test water shall not be in contact with austenitic stainless steel for more than 72 hours, unless treated with a BUYER approved biocide.
- After completion of the hydrostatic test, the vessel and internal piping shall be drained, dried, cleaned thoroughly inside and outside to remove grease, loose scale, rust, and dirt and closed as quickly as practicable.

B. Obstruction Inspection
- VENDOR shall ensure and document that all internals, internal piping, and jacketing are free from obstructions.
- If visual inspection cannot confirm lack of obstructions, a flow test shall be performed on internal piping and jackets as specified on the MDSs or DPDs.

C. Final inspection
- Final inspection is a required hold point, and BUYER shall have a minimum of 10 days notice.
- Final inspection of the completed vessel shall be the sole responsibility of VENDOR.
- The finished dimensions and cleanliness of the vessels shall be inspected to confirm compliance with the relevant drawings and specifications after completion of all tests.
- All inspection documentation should be complete with all inspection signatures and assembled as defined in Section 3.3.3, Document Submittals.
- Overall visual inspection shall be performed to confirm vulnerable equipment items to include but not limited to small bore piping, and seals, etc., are free from damage.
- Inspection shall be performed to confirm equipment and nozzle orientations are correct.
- Inspection shall be performed to confirm that all structural and equipment bolt tightening has been completed to manufacturer requirements.
- Inspection shall be performed to confirm that surface finish matches design documents.

- Inspection shall be performed to confirm labeling includes the correct item identification and marking in compliance with Section 3.3.1, Identification and Marking.
- VENDOR shall prepare a final inspection report for each contract item, which documents the results of the final inspection.

3.3.9.7 Source Quality Control

A. Orders for pressure vessels shall be subject to random fabrication-site inspections by BUYER or his designee.
B. All records pertaining to base materials, filler materials, fabrication, and inspection including welder's qualification record shall be accessible for BUYER's examination
C. VENDOR shall make a complete set of BUYER approved drawings and other documents available to BUYER's representative at the time the quality surveillance activities are being conducted.
D. BUYER's review of VENDOR's drawings, or release of the vessel for shipment by BUYER's representative, shall in no way relieve the VENDOR of the responsibility for complying with all the requirements of this specification and the purchase order.

3.3.10 Safety Seismic Design Requirements

3.3.10.1 General

A. The safety function, Seismic Design Category (SDC) and required Limit State (LS) are defined on the vessel data sheet.
B. Loads resulting from seismic events shall be considered to act concurrently with normal operating loads (dead and occasional loads, pressure, thermal, etc.) and shall be combined by absolute sum.
C. The design of SSC, in particular systems, shall include the effects of stresses and movements resulting from variations in temperature. Unless noted otherwise, SSC shall be designed for movements resulting and effects of change in temperature from the maximum seasonal temperature change (-18°F to +115°F).

3.3.10.2 SDC-3 Seismic Requirements

A. The SDC-3 seismic input shall consist of in-structure response spectra (ISRS) for the structures at the elevations at which the SSCs are mounted. Preliminary In-structure response spectra will be provided by the BUYER during the initial VENDOR design period for the preliminary design. Subsequent LAWPS-specific in-structure seismic spectra will be provided to the VENDOR for design of the final submittals. The site-specific ground response spectrum provided in Table 3-2 is applicable to components supported at ground level.
B. For SSC supported at elevations between elevations for which ISRS are available, the design ISRS shall be an envelope of ISRS for all applicable elevations.

C. Damping for seismic qualification shall be as specified in ASCE 43, Table 3-2.

3.3.10.3 Methods of Qualification for SDC-3

The seismic qualification of SSC shall be by one (or a combination) of analysis or similarity/experience.

A. Analysis

Any of the following methods are acceptable for quantifying seismic response:

- Equivalent static method
- Response spectrum method
- Time history
- Complex frequency response method

B. Similarity/Experience Data

Equipment may be qualified by similarity to previously qualified equipment. Qualification by similarity must address:

- Materials, arrangement/configuration and dynamic similarity of the components
- Seismic input of previously qualified equipment must envelope ISRS of new components

Table 3-2. LAWPS Free Field (Ground Surface Level) Response Spectrum

FREQUENCY (Hz)	SA-HOR (g)	SV-VERT (g)	FREQUENCY (Hz)	SA-HOR (g)	SV-VERT (g)	FREQUENCY (Hz)	SA-HOR (g)	SV-VERT (g)
100	0.293	0.2135	5.263	0.7941	0.468	0.667	0.1686	0.0955
58.824	0.2937	0.214	5	0.7941	0.4593	0.625	0.1573	0.0906
50	0.294	0.2142	4.545	0.7941	0.4436	0.588	0.1474	0.0861
40	0.2943	0.242	4.167	0.7941	0.4297	0.556	0.1387	0.0822
33.333	0.2967	0.2692	4	0.7941	0.4233	0.526	0.1309	0.0786
30.303	0.3129	0.285	3.846	0.7941	0.4173	0.5	0.1239	0.0753
25	0.348	0.3193	3.571	0.7594	0.4061	0.455	0.1088	0.0676
23.81	0.3576	0.3288	3.333	0.7294	0.396	0.417	0.0967	0.0613
22.727	0.367	0.338	3.125	0.7011	0.3804	0.385	0.0867	0.056
21.739	0.3761	0.347	2.941	0.6756	0.3664	0.357	0.0784	0.0515
20.833	0.3852	0.356	2.778	0.6524	0.3536	0.333	0.0714	0.0476
20	0.3937	0.3644	2.632	0.631	0.3419	0.313	0.0654	0.0443
18.182	0.4143	0.3849	2.5	0.6115	0.3311	0.294	0.0603	0.0414
16.667	0.4342	0.4048	2.381	0.5935	0.3212	0.278	0.0557	0.0387
15.385	0.4533	0.4239	2.273	0.5768	0.3121	0.263	0.0518	0.0365
14.286	0.4727	0.4433	2.174	0.5613	0.3036	0.25	0.0483	0.0344
13.333	0.4916	0.468	2.083	0.5469	0.2957	0.238	0.0452	0.0326
12.5	0.5085	0.468	2	0.5334	0.2882	0.227	0.0424	0.0309
11.765	0.5265	0.468	1.818	0.497	0.2667	0.217	0.04	0.0295
11.111	0.5441	0.468	1.667	0.4644	0.2476	0.208	0.0377	0.028
10.526	0.5612	0.468	1.538	0.4363	0.2312	0.2	0.0357	0.0268
10	0.578	0.468	1.429	0.3993	0.2105	0.182	0.0313	0.024
9.091	0.6105	0.468	1.333	0.3676	0.1928	0.167	0.0279	0.0218
8.333	0.6418	0.468	1.25	0.3402	0.1775	0.154	0.025	0.0199
7.692	0.6719	0.468	1.176	0.3163	0.1643	0.143	0.0226	0.0183
7.143	0.7011	0.468	1.111	0.2954	0.1528	0.133	0.0206	0.017
6.667	0.7294	0.468	1.053	0.2769	0.1427	0.125	0.0188	0.0157
6.25	0.757	0.468	1	0.2603	0.1336	0.118	0.0174	0.0147
6	0.7749	0.468	0.909	0.2351	0.1235	0.111	0.0161	0.0138
5.882	0.7838	0.468	0.833	0.2141	0.1149	0.1	0.0139	0.0122
5.75	0.7941	0.468	0.769	0.1965	0.1075			
5.556	0.7941	0.468	0.714	0.1815	0.1011			

3.3.10.4 Requirements for Qualification Methods for SDC-3

A. Dynamic Analysis Method
The dynamic analysis shall be accomplished using the response spectrum, frequency domain or time-history approach. Time-history analysis shall be performed using either the direct integration method or the modal superposition method.

B. Equivalent Static Analysis Method
Equivalent static analysis method may be used in lieu of a dynamic analysis if the system or component can be realistically represented by a simple model. A static analysis shall be performed by applying equivalent static forces at the mass locations in two principal horizontal directions and the vertical direction. The equivalent static force at a mass location shall be computed as the product of the mass and the seismic acceleration value applicable to that mass location. The seismic acceleration values shall be as follows:

Single Mode Dominant Response: When the mass associated with a mode exceeds 75% of the total mass, the response is considered as a single mode dominant response. In this case, the acceleration value corresponding to the dominant mode frequency from the applicable in-structure response spectrum shall be used, provided the value of the dominant mode frequency is equal to or greater than the value of the frequency corresponding to the peak acceleration. In case the value of the dominant mode frequency is less than the value of the frequency corresponding to the peak acceleration, the peak value of the in-structure response spectrum acceleration shall be used.

Multiple Mode Dominant Response: 1.5 times the peak acceleration value of the applicable in-structure response spectrum shall be used.

Total Seismic Response: The total seismic response shall be computed by combining the co-directional responses from the two horizontal and the vertical analyses by either the SRSS method, or the Component Factor Method (1/0.4/0.4).

C. Modeling
Unless a more complex model, e.g., a finite element model, is required, the equipment shall be represented by a lumped-mass system consisting of discrete masses connected by weightless springs. The criteria used to lump masses shall be as follows:

The number of masses shall be chosen so that all significant modes are included. The modes are considered as significant if the corresponding natural frequencies are less than 33 Hz and the stresses calculated from these modes are greater than 10% of the total stresses obtained from lower modes. This approach is acceptable provided at least 90% of the loading/inertia shall be contained in the modes used. Alternately, the number of degrees of freedom is taken more than twice the number of modes with frequencies less than 33 Hz.

Missing mass shall be accounted for in developing the design forces and moments.

Mass shall also be lumped at the following points:

- Where a significant concentrated weight is located (e.g., the motor in the analysis of pump motor stand, the impeller in the analysis of pump shaft, etc.).
- Where there is a significant change in either the geometry or stiffness

3.3.10.5 Acceptance Criteria for Limit States and for SDC-3

A. ASCE 43 Section C8.0 and Table C8.1 provide guidance for acceptable codes and standards for qualification by analysis for all types of SSC for SDC-3 seismic loads.
B. The following alternative criteria may be used instead of those codes recommended in ASCE 43 Table C8.1 :
   - Pressure Vessels – All vessels may be in accordance with ASME B&PVC, Section VIII, Division 2.
   - Tanks – The governing code for tanks referenced in ASCE 43 may be supplemented by BNL-52361. For the seismic analysis of tanks, the recommendation of ASCE 4 shall be followed.

3.3.10.6 Other Requirements for SDC-3

A. Seismic qualification of SSC must address the end-of-life condition. The SSC qualified life considerations depend on the qualification method. For example:
   - Deduct corrosion/erosion allowance when calculating stresses.
   - Address degradation mechanisms beyond general wall thinning such as cracking and fatigue.

B. To avoid adverse interaction, Non-safety SSCs shall be isolated from Safety SSCs. If it is not feasible or practical to isolate them, these Non-safety SSCs shall be analyzed according to the same criteria as applicable to the Safety SSCs (i.e., subjecting these to the same level of seismic motion) and evaluating them using acceptance criteria such that these cannot adversely interact with any Safety SSCs.
C. For Non-safety SSCs attached to Safety SSCs, the dynamic effects of the Non-safety SSCs shall be simulated in the modeling of Safety SSCs. Attached Non-safety systems such as piping or raceways, shall also be designed up to the first anchor beyond the interface in such a manner that the Non-safety SSC will not adversely impact or cause a failure of the Safety SSCs.

3.3.10.7 Safety Seismic Design Criteria for SDC-1 and SDC-2

A. For seismic design purposes there are two SDC's; SDC-1 and SDC-2 with different LS that shall be designed following ASCE 7 provisions for Risk Category (RC) II and RC IV, respectively, except as shown in Table 3-3.

B. SDC-1 and SDC-2 seismic loads shall be determined per ASCE 7 with horizontal SDS = 0.588g, SD1 = 0.192g and the vertical SDS = 0.346g, SD1 = 0.098g.
C. The load and load combinations shall be in accordance with Chapter 2 of ASCE 7. All SSCs shall meet the requirements specified in Chapter 13 and/or Chapter 15 of ASCE 7 and IBC.
D. Structural steel and anchorage shall comply with AISC 360.
E. Welding of structural steel shall comply with AWS D1.6

Table 3-3. Response Modification Coefficients for Seismic Design of SDC-1 and SDC-2 SSCs

SDC	Limit State			
	A	B	C	D
1	ASCE/SEI 7-10, Use Risk Category II, I = 1.0 R_a =R	ASCE/SEI 7-10, Use Risk Category II, I = 1.0 R_a = R/1.25 R ≥ 1.2	ASCE/SEI 7-10, Use Risk Category II, I = 1.0 R_a = R/1.5 R_a ≥ 1.2	ASCE/SEI 7-10, Use Risk Category II, I = 1.0 R_a ≥ 1.0
2	N/A	ASCE/SEI 7-10, Use Risk Category IV, I = 1.5 R_a = R	ASCE/SEI 7-10, Use Risk Category IV, I = 1.5 R_a = R/1.2 R_a ≥ 1.2	ASCE/SEI 7-10, Use Risk Category IV, I = 1.5 R_a ≥ 1.0

Table notes:

R = Response Modification Coefficient given in ASCE/SEI 7-10. R_a = Actual (reduced) Response Modification Coefficient to be used in the design substituting R values given in ASCE/SEI 7-10 to account for the difference between the limit states achieved by ASCE/SEI 7-10 and the LS A, B, C, and D, as defined in ANSI/ANS-2.26-2004 and ASCE/SEI 43-05. ASCE/SEI 43-05, in Table C1-1, recognizes that Seismic Use Group (SG) I, SG II, and SG III of ASCE/SEI 7-02 (i.e., Risk Categories II, III, and IV, respectively, in ASCE/SEI 7-10) are equivalent to SDC-1 LS-A; SDC-1 LS- B; and SDC-2 LS-B, respectively. Also, it recognizes that SG III of ASCE/SEI 7-02 (i.e., Risk Category IV in ASCE 7-2010) is equivalent to SDC-1 LS-C. Thus, the ratio between LS A and B and between B and C are approximately 1.25 and 1.2, respectively. The Ra values given above are based on these ratios.

3.3.11 Non-Safety Seismic Design Requirements

For EQA and General Services items (non-safety), the following seismic design requirements apply.

1. Seismic Design Category (SDC): For seismic design purposes there are two SDCs associated with non-safety items; SDC-1 and SDC-2 and shall be designed in accordance with ASCE 7 provisions for Risk Category (RC) II and RC IV, respectively and International Building Code (IBC).
2. SDC-1 and SDC-2 seismic loads shall be determined per ASCE 7 with horizontal SDS = 0.588g, SD1 = 0.192g and the vertical SDS = 0.346g, SD1 = 0.098g.
3. The load and load combinations shall be in accordance with Chapter 2 of ASCE 7. All SSCs shall meet the requirements specified in Chapter 13 and/or Chapter 15 of ASCE 7 and IBC.
4. Structural steel and anchorage shall comply with AISC 360.
5. Welding of structural steel shall comply with AWS D1.6

4.0 QUALITY ASSURANCE REQUIREMENTS

4.1 Requirements

4.1.1 General Requirements

4.1.1.1 This section delineates the quality assurance (QA) requirements and processes that will be utilized to execute this contract. Additional QA requirements may be delineated in the design documents and other contractual documents. For a listing of applicable quality clauses see Table 4-1 Procurement Quality Clauses.

4.1.1.2 The VENDOR agrees to incorporate the appropriate QA requirements of this section and those requirements specified elsewhere in the contract into their subcontracts and purchase orders for all lower-tier VENDORs and suppliers utilized in the performance of this contract, as the QA requirements apply for the services or items being provided. The VENDOR shall communicate these QA requirements to their personnel, suppliers, and lower-tier VENDORs so that items and work activities provide for safe and reliable construction.

4.1.1.3 The VENDOR shall provide access to its facility, documents and records, applicable to the performance of this contract for BUYER's review and assessment. The VENDOR shall flow down this "right of access" requirement to its sub-tier VENDORs and suppliers. The VENDOR shall coordinate the review or assessment of sub-tier VENDORs' and suppliers' facilities, documents and records with the BUYER.

4.1.1.4 If selected for oversight the BUYER will co-ordinate with the VENDOR to conduct scheduled and periodic oversight of activities or products associated with this scope of work.

4.1.1.5 For pressure vessels, the VENDOR shall maintain a ASME B&PVC Section VIII Division 1 certified program in accordance with QA Clause B07.

4.1.1.6 Nonconformance documentation and reporting shall be in accordance with QA Clause B22.

4.1.1.7 Personnel performing weld inspections shall be certified in accordance with QA Clause B25.

4.1.1.8 Nondestructive weld examination personnel shall be qualified in accordance with QA Clause B31.

4.1.1.9 During the performance of work, the VENDOR shall provide to the BUYER copies of all documents that constitute reports of deficiencies, weaknesses, nonconformances, or noncompliances with established requirements related to items or services provided for this Contract. Such documents may include:

- Nonconformance Reports.
- Corrective Action Reports.
- Critique Information/Reports.
- Investigation Reports.

- Internal/External Assessment/Surveillance/Audit Reports.
- Employee Concerns associated with Nuclear Safety.
- Any other document associated with a deficiency or noncompliance.

Table 4-1 Procurement Quality Clauses

PREAWARD AND SUPPLIER FABRICATION	
B07	Certified Quality Program
B12	Supplier Use of Calibrated Equipment
B13	Fabrication/Inspection/Test Plan
B15	Supplier Use of Commercial off the Shelf Software
B18	Supplier Use of Spreadsheet Calculations Using Commercial off the Shelf Software
B22	Nonconformance Documentation and Reporting
B25	Certified Weld Inspector (CWI)
B28	Welding Procedures and Qualifications
B31	Nondestructive Examination Process
MATERIAL IDENTIFICATION	
B33	Identification of Items with Product Data Sheets
TESTING AND TEST DATA	
B46	Liquid Penetrant Material Certification
B49	Certified Material Test Report
B52	Inspection and Test Report
INSPECTION AND ACCEPTANCE CRITERIA	
B70	Supplier Furnished Items
B73	Control of Graded Fasteners
B76	Procurement of Potentially Suspect or Counterfeit Items
B79	Certification of Conformance
B80	Certification of Conformance for Commercial Grade Surveyed Procurements
MATERIAL HANDLING	
B85	Packaging/Shipping Procedures

4.1.2 Additional Requirements for FQA Items

For FQA items, the VENDOR is required to have and use a quality assurance program that is consistent with the requirements of ASME NQA-1 Quality Assurance Requirements for Nuclear Facility Applications, including applicable addenda requirements. The VENDOR's QA program will be reviewed, evaluated, and approved for BUYER through an onsite audit and has been added to their Evaluated Supplier List (ESL) prior to award of the contract.

4.2 VENDOR Design

4.2.1 General Requirements

4.2.1.1 All revisions to submitted calculations, as a result of comments by the BUYER or design changes by any sub suppliers, however minor, shall be resubmitted.

4.2.1.2 When subcontracting any portion of this specified work, the VENDOR is required to invoke the applicable quality assurance program requirements on their supplier(s) and evaluate and qualify suppliers in accordance with these QA requirements. The BUYER reserves the right to verify the quality of work at the VENDOR's facility, including any supplier facilities.

4.2.2 Additional Requirements for FQA Items

4.2.2.1 The VENDOR shall implement and maintain a quality assurance program in accordance with applicable requirements of NQA-1 for control of software used for calculation or analysis where the results are not checked by alternate methods (including as applicable for Safety Software Part II Subparts 2.7 and 2.14, and DOE O 414.1D Attachment 4).

4.2.2.2 Design calculations shall be provided to the BUYER for review incorporating preliminary in-structure response and subsequently for final approval having incorporated the final LAWPS Site-specific in-structure response approval prior to initiating the final design. Engineering calculations and analysis shall be fully checked by a qualified individual other than the originator, and shall be signed and dated as checked. All final submittals of calculations shall be bound and shall include the title and purpose of the calculation, a table of contents or index, complete list of references, design basis and complete list of assumptions (if any), methodology, and sufficient information to allow independent verification of the calculation. VENDOR shall follow QA Clauses B15 and B18 as applicable.

4.2.2.3 The VENDOR shall identify the software and version used or applied with each document, calculation, and/or analysis which shall be traceable to a documented verification and validation.

4.2.2.4 Verification and Validation (V&V) of software used for safety significant calculations shall be documented. The V&V shall cover the range of the results and shall be conducted in accordance with the VENDOR'S applicable QA program and QA

Clause B15. A copy of the V&V package for each piece of software used to prepare safety significant calculations shall be provided.

4.2.2.5 The BUYER shall define the quality assurance (QA practices) methodology applied during activities utilizing software. The VENDOR shall identify what industry standard or commercial practice methodology is followed for the design, development, testing, and change control of their software.

4.2.2.6 The VENDOR shall describe the process for reporting and documenting software problems/errors, evaluating impacts of problems on measurements and uses, and determining the appropriate corrective action(s).

4.3 Verification

4.3.1 General Requirements

Design verification shall be performed to ensure the design adequately meets design criteria, the design is technically adequate, and the design meets applicable requirements for quality, safety, and performance. The VENDOR shall have responsibility for the performance and documentation of all design verifications associated with this specification.

4.3.2 Additional Requirements for FQA Items

4.3.2.1 The equipment design shall be verified in accordance with the VENDOR's ASME NQA-1 compliant design verification procedures. The BUYER will review and approve the VENDOR's design in the submittal review process.

4.3.2.2 VENDOR's developed multiple-use and single use spreadsheets shall be developed and verified in compliance with VENDOR's ASME NQA-1 compliant calculation verification procedures.

4.4 Inspection and Testing

4.4.1 General Requirements

4.4.1.1 The VENDOR shall develop and submit work control documents (e.g., fabrication, inspection, and test plans) for items to be fabricated by the VENDOR or their lower-tier supplier in accordance with QA Clause B13. The work control document shall delineate details for performing the fabrication including inspections and testing required by the contract. The BUYER will identify BUYER's required inspection points, include third party inspections, during review of the work control documents.

4.4.1.2 When BUYER's "hold" points are identified in the work control document, the VENDOR shall provide at least 48 hours advance notice.

NOTE: A BUYER's "hold" point may be waived by correspondence (e.g., e-mail) from the BUYER, which will be included with the work control document.

4.4.1.3 VENDOR shall prepare a Fabrication Acceptance Test Plan and submit for BUYER approval prior to undertaking any testing activities. The Fabrication Acceptance Test Plan shall include, but not be limited to the following:

- Weld examinations as defined by the requirements of this specification.
- Physical measurement inspections against design documents to ensure critical dimensions are met.
- Pressure testing of each completed vessel as defined by the requirements of Section 3.3.9.6, Acceptance Testing.

4.4.1.4 VENDOR shall prepare a Fabrication Acceptance Test Report with the results of the Fabrication Acceptance Test per the Fabrication Acceptance Test Plan.

4.4.2 Additional Requirements for FQA Items

4.4.2.1 Inspections and testing including the documentation required by the contract shall be performed by qualified VENDOR Quality Control personnel or third party, who is independent of the work being performed. Quality Control personnel or third party shall be trained and qualified in accordance with the VENDOR's or third party approved Quality Assurance Program (QAP).

4.4.2.2 The VENDOR shall submit completed fabrication work control documents to BUYER for approval. The VENDOR shall perform a final acceptance review to verify that all steps have been completed and that required documentation (e.g., weld records, installation inspection reports, material inspection reports, pressure test reports, coating inspection reports, etc.) has been included. Final acceptance shall be signified by signature and date on the work control document.

4.5 Receipt Inspection

4.5.1 General Requirements

4.5.1.1 VENDOR's procured permanent plant items shall be receipt-inspected by the VENDOR in accordance with their QAP prior to delivery to the work site. Items may be receipt-inspected at the site shops but prior to delivery at the installation area. NOTE: Special receipt inspection requirements apply to VENDOR-procured items that are designated by the BUYER as Safety Significant.

4.5.1.2 When VENDOR fabricates BUYER permanent plant items, the Fabrication Work Control Document shall identify the final inspection(s) necessary for the BUYER to accept the fabrication. The BUYER's inspection personnel shall perform final inspection(s). The BUYER's inspection personnel shall indicate final acceptance of the fabricated item on behalf of the BUYER. Normally, application of an acceptance tag will indicate acceptance and authorize the VENDOR to install the fabricated item.

4.5.1.3 When BUYER permanent plant items are provided, the VENDOR shall inspect and document all furnished items prior to accepting custodial responsibility. Discrepancies identified during inspection shall be immediately brought to the BUYER's attention. The inspection shall include as applicable:

- Labels, tagging and/or general identification of items.
- Quantity of items received.
- Any visible damage to packaging (e.g., water marks, oil stains, crushed container, etc.).
- Any visible damage to items (e.g., corrosion, scaling, cracks, broken pieces, obstruction or damage to rotating equipment, etc.).
- Condition of visible coatings and/or paint.
- Protective covers and seals installed.
- Cleanliness of items.
- Verification of dimensional characteristics.

4.6 Noncompliances and Nonconformance

4.6.1 General Requirements

4.6.1.1 The VENDOR shall assure that services and processes that do not meet the requirements of the contract are identified, mitigated or controlled, and corrected. Noncompliances that have significant cost, schedule, quality, safety, health or environmental implications shall be investigated to determine the extent of the noncompliance and its causes.

4.6.1.2 The VENDOR shall verify that actions taken to correct noncompliances are complete and adequate to prevent recurrence. The relevant responses, actions required, verifications, and other documentation shall be transmitted to BUYER upon closure.

4.6.1.3 The VENDOR shall either correct nonconforming items immediately, or control them to prevent inadvertent use, installation, or testing.

4.6.1.4 The VENDOR shall control nonconforming items by segregating affected items in a clearly identified and designated hold area, marking or tagging the items to indicate they are nonconforming, or instituting other measures approved by BUYER.

4.6.1.5 The VENDOR shall notify BUYER whenever nonconforming items cannot be restored to their original, specified condition (i.e., nonconformance dispositioned "REPAIR" or "USE-AS-IS").

4.6.1.6 In selected cases, nonconforming item may be conditionally released for work or installation provided the nonconforming condition is not affected and the corrective action can still be performed. The BUYER shall be notified of such cases to authorize a conditional release. Otherwise, nonconforming items shall not be released until corrective actions have been completed and verified.

4.7 VENDOR Procurement of Items/Materials

4.7.1 General Requirements

4.7.1.1 Any items procured directly from a sub-supplier as a completed assembly (such as catalogue items) shall be in accordance with QA Clause B70.

4.7.2 Additional Requirements for FQA Items

4.7.2.1 Items designated by the BUYER as FQA shall be procured by the VENDOR when contractually indicated to do so in the Statement of Work.

4.7.2.2 When the FQA item or material is available from an evaluated supplier on BUYER's Evaluated Supplier List (ESL), the procurement must be conducted strictly in the following manner.

A. The FQA item or material must be available from a supplier listed on the BUYER's ESL.
B. The FQA item or material must be within the scope of provision of the ESL supplier, as indicated on the ESL (e.g., pipe is provided by pipe suppliers, not by structural steel suppliers).
NOTE: the BUYER's Procurement Quality Clauses (i.e., "B" clauses) may be used as a shortcut method for delineating the VENDOR's procurement requirements to the supplier.

C. The Quality Assurance requirements listed on the VENDOR's proposed procurement document must equal the Quality Assurance requirements specified for the supplier on the BUYER's ESL.

4.7.2.3 When the FQA item or material is not available from a supplier on the BUYER's ESL, the FQA item or material must undergo a commercial grade item dedication. The provisions of ASME NQA-1 for Commercial Grade Items (CGI) shall be by the VENDOR. The VENDOR shall be responsible for dedicating safety significant (FQA) items or materials under their own QA program. To facilitate the procurement of items or materials that are intended to be dedicated, the VENDOR must submit their proposed procurement document to the BUYER for approval before ordering, in accordance with the following:

A. Critical Characteristics for CGI shall be formally identified on a BUYER-provided form (A-6002-544). A CGI dedication plan shall be prepared by the VENDOR and approved by the BUYER prior to the VENDOR ordering items or material to be dedicated.
B. The VENDOR submits for BUYER approval a proposed procurement document specifying the FQA item or material, the intended supplier, the Quality Assurance requirements, the BUYER's safety classification, the procurement QA clauses to be invoked, and acceptance criteria at receipt.
C. The VENDOR shall only order the FQA item or material upon receipt of written authorization from the BUYER.

4.8 Suspect/Counterfeit Parts

Items furnished for this subcontract shall not include Suspect/Counterfeit Items (SCI) in accordance with QA Clause B76.

4.9 Measuring and Test Equipment

4.9.1 General Requirements

4.9.1.1 Measuring and Test Equipment (M&TE) shall be properly calibrated, maintained, and controlled in accordance with QA Clause B12.

4.9.1.2 Perform calibration at specified intervals based on the type of equipment, required accuracy, frequency of use, stability characteristics, and other conditions affecting performance. Calibration shall have accuracy traceable to national standards (where they exist), and calibration standards shall have the accuracy to ensure that the M&TE will have the required tolerances. Maintain records and mark equipment to show calibration status.

4.9.1.3 When M&TE is found to be out of calibration, the VENDOR shall have a method to identify its use since the last calibration and methods to re-verify acceptability of items previously tested.

4.10 Acceptance Criteria

4.10.1 General Requirements

4.10.1.1 All design, fabrication, and testing shall meet or exceed the acceptance criteria contained in this Specification and referenced codes and standards. Deviations from acceptance criteria shall be reported and resolved as described in Section 4.6.

4.10.1.2 The identification and definition of quality levels for LAWPS design & fabrication is provided on the DPDs, and equipment data sheets.

4.10.1.3 Methods used to accept an item or service shall be a Certificate of Conformance, source verification, receiving inspection, Fabrication Acceptance Test (FAT), or post installation test on site, or a combination of these methods.

5.0 PREPARATION FOR DELIVERY

5.1 General Requirements

1. VENDOR shall receive, clean, package, store, preserve, handle, and ship Structures, Systems and Components to protect against physical damage, or any effect that would affect quality or cause deterioration at all times while items are located on the VENDOR's premises.
2. For safety related (FQA) items, VENDOR shall receive, clean, package, store, preserve, handle, and ship Structures, Systems and Components to protect against physical damage, or any effect that would affect quality or cause deterioration at all times while items are located on the VENDOR's premises in accordance with ASME NQA-1-2008/2009A, Quality Assurance Requirements for Nuclear Facility Applications, Part II, Subpart 2.2. Classification of items and packaging will follow the guidelines of ASME NQA-1. All safety related (FQA) items shall be classified as Level B Items.
3. VENDOR shall submit a Packaging, Storage, Shipping, and Handling (PSSH) Plan. The PSSH plan shall include all plans, procedures, and drawings that address how items will be packaged, stored, shipped, and handled in accordance with the requirements described throughout this specification with the exception of topics covered by the Lift and Rigging Plan described in Section 5.5, "Handling."

5.2 Preservation and Packaging

1. The design of the vessels and specifications for site delivery and storage shall be appropriate for the conditions specified in Section 3.2.5, "Environment."
2. Cleaning – Flush vessel interior and associated piping, as applicable, with water for 2 minutes minimum, and until effluent is clean and contains no visible particulate matter. Flushing pressure shall not exceed maximum operating pressure of the component. Flushing water supply shall comply with the chloride content limitation in Section 3.3.4.3, "Contact Materials" and shall have sufficient capacity to produce a flow velocity of 4 to 6 ft/s in largest pipe size, with pipe full.
3. Each vessel shall be completely drained of all liquid prior to shipment. VENDOR shall be responsible for all damage which occurs as a result of improper drainage.
4. Contact With Different Metals – Any item containing or comprised of austenitic stainless steel or nickel based alloys shall be stored, handled, and constructed in a manner that prevents direct contact with materials such as carbon steel, lead, zinc, copper, mercury, halogenated material, low melting elements, and any chloride containing material.
5. Prior to packaging an item, vendor shall provide visual internal inspection to ensure the inside of the vessels are empty, clean and dry. Debris/contamination shall be removed using VENDOR's documented and approved standard procedure, unless specified otherwise. The interior surfaces of vessel, and associated piping shall appear clean and free of organic films and contaminates, when examined in accordance with ASTM A380, and show no deleterious contamination when subjected to a wipe test of ASTM A380. Wipe tests shall be made prior to the application of any preservative film. VENDOR shall provide cleaning records that show the item has been cleaned as appropriate prior to packaging.

6. All equipment openings shall be capped, plugged or sealed to prevent entry of foreign material and humidity and protected against corrosion and physical damage.
7. Tapes, adhesives, desiccants, or any other packaging materials contacting austenitic stainless steel and nickel alloy surfaces shall not be paperbacked tape (masking) not compounded from or treated with chemical compounds containing elements in such quantities that harmful concentrations are leachable, could be released by breakdown under expected environmental conditions. Upon removal of tape, all residual adhesive shall be removed by wiping with a reagent grade non halogenated solvent.
8. Tapes and adhesives used to seal nonaustenitic materials, nickel alloys, or containers are not subject ot restrictions of austenitic stainless steel and nickel alloy surfaces. Tape shall be impervious to water and not subject to cracking or drying out if exposed to sunlight, heat, or cold.
9. All provisions of this section are applicable to site erected vessels as well.

5.3 Packing

1. A detailed packing list shall be provided with each shipment. The packing list shall identify content (every item in the shipment including quantities), package type (the container it is packaged in or on), packaging materials (including temporary supports and preservatives, it used), dimensions/weight for each package in the shipment, installation drawing number references, total number of packages in the shipment, and total weight for the shipment.
2. Exterior package type shall provide the level of protection required based on the storage and environmental limits.
3. Prior to shipment from the VENDOR's facilities, BUYER shall be provided opportunities (as appropriate) to inspect shipments to assure that products comply with all requirement, quantities are correct, products are undamaged, and packages are ready for shipment.

5.4 Marking

1. Package marking shall appear on two sides of a container, at a minimum, preferably on one side and one end. Package markings shall be applied with waterproof ink or paint in characters that are legible.
2. When information relative to handling and special instructions is required, such information shall be preceded by the word CAUTION in letters that are at least 1/2 in. (12.7 mm), as permitted by package size. Alternatively if tags or labels are used, they shall be affixed to the container using a waterproof adhesive, tacks where practical, or a corrosion-resistant wire.
3. Clearly mark partial deliveries of component parts of equipment to identify equipment and contents to permit easy accumulation of parts and to facilitate assembly. Temporary supports shall be marked (tagged or painted).
4. Prior to shipment, all packages shall be clearly and suitably tagged to identify, at a minimum:

   A. BUYERS name with destination address
   B. VENDOR's name with return address
   C. Package numbers showing the Purchase Order (PO) Number followed by the package number and the total number of packages

D. Package contents description
E. Weight of package
F. Center of gravity
G. Parts list (for each package)
H. Handling instructions (e.g., Fragile, Center of Gravity, Keep Dry, This Side Up, Sling Here, Do Not Freeze) and stacking limitations, as appropriate
I. Special instructions (Desiccant Inside, Special Inspection, Storage, Unpacking Restrictions, etc.) as appropriate
J. Marking of items not within a container, such as pipe, tanks, and heat exchangers, shall exhibit the above specified information in a location that is in plain unobstructed view. Marking may be applied directly to bare metal surfaces, provided it has been established that the marking material is not deleterious to the item. Stamping and etching are not allowed as temporary marking methods.
K. If any hazardous chemicals are included with shipments, the transport vehicle shall display the relevant Department of Transportation labels/placards.

5.5 Handling

5.5.1 Lift and Rigging Plan

VENDOR shall provide a Lift and Rigging Plan to cover the lifting and handling instructions for each lifted item (entire package as well as individual items that are uncrated). The plan shall describe the lift points, special lifting devices and/or hardware needs, lift diagrams, and lift test plans in accordance with DOE-RL-92-36. Lift diagrams shall be dimensioned drawings for each equipment/assembly indicating all dimensions and tools necessary for support, lift and shipment of the lifted item. Tolerances for such dimensions shall be noted, either on the specific dimension or in general notes. Dimensions locating centers of gravity shall be generated by VENDOR calculation and shall be noted on the drawing, and the calculations shall be submitted with the drawings. These drawings and calculations shall be provided with the PSSH plan described in Section 5.1.

5.5.2 Lifting Attachments

The lifting attachment(s) on the equipment (lifting eyes, lugs, ears, etc.) and the lifted item shall be designed in accordance with the following procedure except ASME BTH-1 should be used to verify lifting lugs hole diameter compared to the shackle pin diameter (the D to d ratio). The design shall consider equipment orientation, i.e., horizontal to vertical.

1. Estimated Weight of item: Determine the dead weight of each item by calculation, or from indicated weight from a calibrated load measuring device reading (if available). For reference, describe how the weight information was obtained.
2. Weight Contingency Factor: Increase the estimated weight by 5% for items that are solid or for which void fill is already accounted for in the estimated weight.
3. Dynamic Lifting Force: Increase the resultant weight from Step 2 by 25% to account for dynamic loads from crane operations.

4. Design Weight: The weight to be used in the structural analysis is the weight from Step 2 (including contingency factor) multiplied by the 1.25 factor from Step 3. In most cases, the design weight is the estimated weight times (1.05) times (1.25).
5. Material Properties: Use appropriate technical references, and provide reference to sources in calculations.
6. Evaluation of Stresses: Use the appropriate requirements to calculate stresses using the Design Weight. Current editions of Codes or other referenced documents should be used for the evaluation. The calculations should include the following items as a minimum:

   A. Use Design Weight from Step 4 above.
   B. Use 45 degree minimum sling angle from horizontal for items with more than one pick point. An angle greater may be specified in the design and shown on the drawings to reduce the lateral load component. List the minimum sling length required to maintain the specified sling angle.
   C. For multiple pick points: use 2 lift points if there are 2 total, use 3 lift points if there are 3 total, and use 3 lift points if there are 4 total to determine the force per pick point. Divide the Design Weight by the number of pick points, at 45° or the specified angle, allowed for analysis. Note: This is applicable only if the weight is evenly distributed throughout the multiple pick points. Determine adequacy of lifting points (vertical, horizontal and resultant loads, as appropriate).
   D. Determine adequacy of welds.

7. Design Ratio: Determine the design ratios for the resultant stresses in each component. The design ratio is the allowable stress per AISC 360 divided by the calculated stress (Step 6).
8. When a minimum design ratio is less than 1, either a more detailed analysis is required; the lifting point must be modified, repaired, or replaced; or the method of lifting changed. The revised detailed analysis or the analysis for the new lifting point (replacement or repaired) shall be included in the package.
9. Maximum Allowable Rated Capacity: Determine the Maximum Allowable Rated Capacity by multiplying the Design Weight (Step 4) by the minimum design ratio obtained in Step 7.

5.5.3 Lift Point Marking

Lift points for packages and individual components shall be clearly identified.

5.5.4 Critical Welds

1. All critical welds shall be identified in the VENDOR's design media.
2. For the purpose of this requirement, critical welds are defined as those welds whose failure could result in loss of load or loss of load control.
3. All critical welds on lifting devices shall be full-penetration welds, if possible.
4. Critical welds shall be verified by Non-Destructive Examination.

5.5.5 Special Lifting Devices

Any special handling devices needed for assembly or installation shall be identified and supplied with the equipment. VENDOR provided structural and mechanical lifting devices shall meet the requirements of DOE/RL-92-36.

5.5.6 Below-the-Hook Device Markings

Below –the-hook lifting devices shall be provided with markings and tags in accordance with DOE/RL-92-36. At a minimum, the marking shall include Hanford drawing number (if applicable), special lifting instructions, and clearly indicate lifting attachments. The marking shall be in the form of a name tag, name plate, or other permanent marker.

5.6 Transportation and Storage

Items shall either be self-supporting or provided with packing and dunnage so as to ensure their stability and protection from damage. Each vessel shall be weather protected for transport.

Equipment shall be packaged, supported, and secured to the transport vehicle in a manner so it can withstand a 0.8g (forward) hard-braking stop, and rearward or lateral acceleration of 0.5g, as well as, shock and vibration loads associated with transportation. Calculations that demonstrate compliance with these requirements shall be included in the Packaging, Storage, Shipping, and Handling (PSSH) Plan described in Section 5.1. Note that this is the minimum requirement; if a supplier has more stringent requirements, the supplier's requirements shall be applied. Where equipment is braced internally, it shall be marked to identify removal.

Each unit shall be completely drained of all liquid prior to shipment. VENDOR shall be responsible for all equipment damage which occurs as a result of improper drainage and storage.

5.7 Shipping

All equipment shall be shipped in accordance with the applicable Department of Transportation (DOT) standards and in an orientation ready for lifting. Additional handling of the equipment to orientate it for lifting is not acceptable. VENDOR shall be responsible for loading, bracing, and anchoring equipment to prevent any damage during shipment.

5.7.1 Transport and Tie-Down Instructions

Vendor shall provide instructions and diagrams for securing all shipping packages. Transportation tie-down points shall be identified on the equipment. Lift points shall not be used for tie-downs. Calculations will be required for the design of all transport tie-down attachment points.

5.7.2 Unpacking and Assembly Drawing

VENDOR shall provide a dimensioned drawing that includes receiving instructions, unpacking instructions, and on-site assembly instructions (if equipment is shipped in a disassembled state). These drawings shall be provided with the PSSH plan described in Section 5.1.

5.7.3 Offloading

Offloading at BUYER designated delivery site will be performed by the BUYER or a BUYER-designated representative.

6.0 LIST OF APPENDICES

Appendix A – Cesium Product Tank 202LP-CSA-ECS-TK-200

Appendix B – Lead IX Break Tank 202LP-IXA-IX-TK-210

Appendix C – Lag IX Break Tank 202LP-IXA-IX-TK-211

Appendix D – Treated Waste Delay Tank 202LP-IXA-IX-TK-300

Appendix E – Lag Storage Tank 202LP-LSA-LAG-TK-301

Appendix F – Lag Storage Tank 202LP-LSA-LAG-TK-302

Appendix G – Lag Storage Tank 202LP-LSA-LAG-TK-303

Appendix A – Cesium Product Tank 202LP-CSA-ECS-TK-200

- 202LP-CSA-ECS-TK-200, Cesium Product Tank Datasheet
- H-16-000002, Sheet 1, LAWPS P&ID Equipment and Piping Symbols
- H-16-000003, Sheet 1, LAWPS P&ID Instrument Symbols
- H-16-000003, Sheet 2, LAWPS P&ID Instrument Symbols
- H-16-000004, Sheet 1, LAWPS P&ID Tagging Legend
- H-16-000027, Sheet 1, LAWPS P&ID Cesium Tank Vault and Pits
- H-16-000027, Sheet 2, LAWPS P&ID Cesium Tank Vault and Pits
- H-16-000027, Sheet 3, LAWPS P&ID Cesium Tank Vault and Pits
- H-16-000296, Sheet 1, LAWPS Liner Plan Vault Floors
- H-16-001460 Sheet 1, LAWPS Cesium Tank Vault (ECS-V-01) Mechanical Layout
- H-16-001460 Sheet 2, LAWPS Cesium Tank Vault (ECS-V-01) Mechanical Layout
- H-16-001460 Sheet 3, LAWPS Cesium Tank Vault (ECS-V-01) Mechanical Layout
- H-16-001461 Sheet 1, LAWPS ECS-TK-200 Cs Tank Assembly DPD
- H-16-001461 Sheet 2, LAWPS ECS-TK-200 Cs Tank Assembly DPD
- H-16-001461 Sheet 3, LAWPS ECS-TK-200 Cs Tank Assembly DPD
- H-16-001461 Sheet 4, LAWPS ECS-TK-200 Cs Tank Assembly DPD
- H-16-001461 Sheet 5, LAWPS ECS-TK-200 Cs Tank Assembly DPD
- H-16-001920, LAWPS Tank Thermowell Typical Detail

Appendix B – Lead IX Break Tank 202LP-IXA-IX-TK-210

- 202LP-IXA-IX-TK-210, Lead Ion Exchange Break Tank Datasheet
- H-16-000002, Sheet 1, LAWPS P&ID Equipment and Piping Symbols
- H-16-000003, Sheet 1, LAWPS P&ID Instrument Symbols
- H-16-000003, Sheet 2, LAWPS P&ID Instrument Symbols
- H-16-000004, Sheet 1, LAWPS P&ID Tagging Legend
- H-16-000025, Sheet 1, LAWPS P&ID IX Pit
- H-16-001301, Sheet 1, LAWPS IX Pit (IX-P-02) Mechanical Layout
- H-16-001301, Sheet 2, LAWPS IX Pit (IX-P-02) Mechanical Layout
- H-16-001301, Sheet 3, LAWPS IX Pit (IX-P-02) Mechanical Layout
- H-16-001370, Sheet 1, LAWPS IX-TK-210 Lead Break Tank Assembly DPD
- H-16-001371, Sheet 1, LAWPS IX-TK-210 Lead Break Tank Vessel DPD
- H-16-001371, Sheet 2, LAWPS IX-TK-210 Lead Break Tank Vessel DPD
- H-16-001371, Sheet 3, LAWPS IX-TK-210 Lead Break Tank Vessel DPD
- H-16-001924, Sheet 1, LAWPS Remote Nut Sleeve Assembly
- H-16-001924, Sheet 2, LAWPS Remote Nut Sleeve Assembly
- H-16-001925, Sheet 1, LAWPS Jumper Nozzle Connection 2" PUREX Kickoff Assembly
- H-16-001926, Sheet 1, LAWPS Jumper Nozzle Connection 1" PUREX Kickoff Assembly
- H-16-001927, Sheet 1, LAWPS Jumper Nozzle Connection 3" PUREX Kickoff Assembly

Appendix C – Lag IX Break Tank 202LP-IXA-IX-TK-211

- 202LP-IXA-IX-TK-211, Lag Ion Exchange Break Tank Datasheet
- H-16-000002, Sheet 1, LAWPS P&ID Equipment and Piping Symbols
- H-16-000003, Sheet 1, LAWPS P&ID Instrument Symbols
- H-16-000003, Sheet 2, LAWPS P&ID Instrument Symbols
- H-16-000004, Sheet 1, LAWPS P&ID Tagging Legend
- H-16-000025, Sheet 1, LAWPS P&ID IX Pit
- H-16-001301, Sheet 1, LAWPS IX Pit (IX-P-02) Mechanical Layout
- H-16-001301, Sheet 2, LAWPS IX Pit (IX-P-02) Mechanical Layout
- H-16-001301, Sheet 3, LAWPS IX Pit (IX-P-02) Mechanical Layout
- H-16-001375, Sheet 1, LAWPS IX-TK-211 Lag Break Tank Assembly DPD
- H-16-001376, Sheet 1, LAWPS IX-TK-211 Lag Break Tank Vessel DPD
- H-16-001376, Sheet 2, LAWPS IX-TK-211 Lag Break Tank Vessel DPD
- H-16-001376, Sheet 3, LAWPS IX-TK-211 Lag Break Tank Vessel DPD
- H-16-001924, Sheet 1, LAWPS Remote Nut Sleeve Assembly
- H-16-001924, Sheet 2, LAWPS Remote Nut Sleeve Assembly
- H-16-001925, Sheet 1, LAWPS Jumper Nozzle Connection 2" PUREX Kickoff Assembly
- H-16-001926, Sheet 1, LAWPS Jumper Nozzle Connection 1" PUREX Kickoff Assembly
- H-16-001927, Sheet 1, LAWPS Jumper Nozzle Connection 3" PUREX Kickoff Assembly

Appendix D – Treated Waste Delay Tank 202LP-IXA-IX-TK-300

- 202LP-IXA-IX-TK-300, Treated Waste Delay Tank Datasheet
- H-16-000002, Sheet 1, LAWPS P&ID Equipment and Piping Symbols
- H-16-000003, Sheet 1, LAWPS P&ID Instrument Symbols
- H-16-000003, Sheet 2, LAWPS P&ID Instrument Symbols
- H-16-000004, Sheet 1, LAWPS P&ID Tagging Legend
- H-16-000028, Sheet 1, LAWPS P&ID IX Treated Waste Delay Tank Pits
- H-16-001580 Sheet 1, LAWPS IX Delay Tank Pit (IX-P-06) Mechanical Layout
- H-16-001580 Sheet 2, LAWPS IX Delay Tank Pit (IX-P-06) Mechanical Layout
- H-16-001580 Sheet 3, LAWPS IX Delay Tank Pit (IX-P-06) Mechanical Layout
- H-16-001581 Sheet 1, LAWPS IX-TK-300 Treated Waste Delay Tank Assembly DPD
- H-16-001581 Sheet 2, LAWPS IX-TK-300 Treated Waste Delay Tank Assembly DPD

Appendix E – Lag Storage Tank 202LP-LSA-LAG-TK-301

- 202LP-LSA-LAG-TK-301, Lag Storage Tank 301 Datasheet
- H-16-000002, Sheet 1, LAWPS P&ID Equipment and Piping Symbols
- H-16-000003, Sheet 1, LAWPS P&ID Instrument Symbols
- H-16-000003, Sheet 2, LAWPS P&ID Instrument Symbols
- H-16-000004, Sheet 1, LAWPS P&ID Tagging Legend
- H-16-000032, Sheet 1, LAWPS P&ID LAG-TK-301 Lag Storage Tank
- H-16-000297, Sheet 1, LAWPS Liner Plan Lag Storage Vault
- H-16-001750 Sheet 1, LAWPS Lag Storage Vault Mechanical Layout
- H-16-001750 Sheet 2, LAWPS Lag Storage Vault Mechanical Layout
- H-16-001750 Sheet 5, LAWPS Lag Storage Vault Mechanical Layout
- H-16-001751 Sheet 1, LAWPS Lag Storage Tank LAG-TK-301 DPD
- H-16-001751 Sheet 2, LAWPS Lag Storage Tank LAG-TK-301 DPD
- H-16-001751 Sheet 3, LAWPS Lag Storage Tank LAG-TK-301 DPD
- H-16-001920, LAWPS Tank Thermowell Typical Detail

Appendix F – Lag Storage Tank 202LP-LSA-LAG-TK-302

- 202LP-LSA-LAG-TK-302, Lag Storage Tank 302 Datasheet
- H-16-000002, Sheet 1, LAWPS P&ID Equipment and Piping Symbols
- H-16-000003, Sheet 1, LAWPS P&ID Instrument Symbols
- H-16-000003, Sheet 2, LAWPS P&ID Instrument Symbols
- H-16-000004, Sheet 1, LAWPS P&ID Tagging Legend
- H-16-000033, P&ID LAG-TK-302 Lag Storage Tank
- H-16-000297, Sheet 1, LAWPS Liner Plan Lag Storage Vault
- H-16-001750 Sheet 1, LAWPS Lag Storage Vault Mechanical Layout
- H-16-001750 Sheet 3, LAWPS Lag Storage Vault Mechanical Layout
- H-16-001750 Sheet 5, LAWPS Lag Storage Vault Mechanical Layout
- H-16-001752 Sheet 1, LAWPS Lag Storage Tank LAG-TK-302 DPD
- H-16-001752 Sheet 2, LAWPS Lag Storage Tank LAG-TK-302 DPD
- H-16-001752 Sheet 3, LAWPS Lag Storage Tank LAG-TK-302 DPD
- H-16-001920, LAWPS Tank Thermowell Typical Detail

Appendix G – Lag Storage Tank 202LP-LSA-LAG-TK-303

- 202LP-LSA-LAG-TK-303, Lag Storage Tank 303 Datasheet
- H-16-000002, Sheet 1, LAWPS P&ID Equipment and Piping Symbols
- H-16-000003, Sheet 1, LAWPS P&ID Instrument Symbols
- H-16-000003, Sheet 2, LAWPS P&ID Instrument Symbols
- H-16-000004, Sheet 1, LAWPS P&ID Tagging Legend
- H-16-000034, P&ID LAG-TK-303 Lag Storage Tank
- H-16-000297, Sheet 1, LAWPS Liner Plan Lag Storage Vault
- H-16-001750 Sheet 1, LAWPS Lag Storage Vault Mechanical Layout
- H-16-001750 Sheet 4, LAWPS Lag Storage Vault Mechanical Layout
- H-16-001750 Sheet 5, LAWPS Lag Storage Vault Mechanical Layout
- H-16-001753 Sheet 1, LAWPS Lag Storage Tank LAG-TK-303 DPD
- H-16-001753 Sheet 2, LAWPS Lag Storage Tank LAG-TK-303 DPD
- H-16-001753 Sheet 3, LAWPS Lag Storage Tank LAG-TK-303 DPD
- H-16-001920, LAWPS Tank Thermowell Typical Detail

SPECIFICATION

16-2-001

PIPING MATERIALS SPECIFICATION

AECOM ATKINS AREVA

LOW ACTIVITY WASTE PRETREATMENT SYSTEM

Project No. 31269 (T5L01)

Document No. 16-2-001

CSI Section 40 05 00.11

Safety Related ☒ Non-Safety Related ☐

PIPING MATERIALS SPECIFICATION

Prepared for

Washington River Protection Solutions, LLC

Revision: 0 Status: Final

MATTHEW SEAN JEND
STATE OF WASHINGTON
54709
REGISTERED
PROFESSIONAL ENGINEER
5/17/17

FOR PERMITTING
5/17/17

REVISION PAGE

Project Name:	LAWPS	Discipline:	Piping
Client:	Washington River Protection Solutions	Project Number: 31269 (T5L01)	
		Latest Revision: 0	

REVISION SIGNATURES

R. Bailey (G. Jones for R.B.)	5/15/2017	M. Jend	5/17/17
Prepared by	Date	Approved by (SDE/Lead)	Date
J. Jackson	5/15/17	P. Bell	5/17/17
Checked by	Date	Approved by (QA) For D.P.	Date
M. Quintana	05/15/2017	D. Priebe	5/17/17
Verified by (if required)	Date	Approved by (PEM)	Date

Status	Rev. No.	Date	Prepared By	Pages	Description of Changes
Final	0	5/15/17	R. Bailey	111	Approved for Construction

Safety Related: Yes ☒ No ☐ TBD ☐	Quality Level: Full QA ☒ Enhanced QA ☐ Commercial QA ☐

TABLE OF CONTENTS

1.0 PART 1 - GENERAL 1

1.1 Section Scope 1

1.2 Related Sections 1

2.0 LIST OF APPENDICES 1

2.1 Appendix A – Supporting Document(s) Issued With This Specification 1

2.2 Appendix B – Piping Materials Index 1

2.3 Appendix C – Piping Material Specifications 1

LIST OF TERMS

Abbreviations and Acronyms

Term	Definition
API	American Petroleum Institute
ASME	American Society of Mechanical Engineers
ASTM	American Society for Testing and Materials
EPDM	Ethylene Propylene Diene Monomer
LAWPS	Low Activity Waste Pretreatment System
MSS	Manufacturers Standardization Society of the Valve and Fittings Industry, Inc.
PTFE	Polytetrafluoroethylene
RFI	Request for Information
RTFE	Reinforced Polytetrafluoroethylene
UHMWPE	Ultra-High Molecular Weight Polyethylene

Units

°C Degree Celsius

°F Degree Fahrenheit

In Inch

psi Pounds per Square Inch

psig Pounds per Square Inch Gauge

kPag Kilopascal Gauge

Definitions

MANUFACTURER – The party responsible for making the product.

SHALL / MUST – Denotes project requirements, compliance is required

SPECIFICATION – Refers to any design, fabrication or supply specification.

1.0 PART 1 - GENERAL

1.1 Section Scope

1.1.1 This specification establishes the minimum requirements for the piping material specifications for the LAWPS project and is to be used in conjunction with Section 40 05 00 "Piping, Fittings and Flanges" for the procurement of piping, fittings and flanges and Section 40 05 51 "Piping Valves Specification" for the procurement of piping valves.

1.1.2 Piping material specifications P7 and P8 shall be used in conjunction with Section 40 05 23.23 "Double Containment Piping for Waste Transfer".

1.2 Related Sections

40 05 00	Piping, Fittings and Flanges
40 05 23.23	Double Containment Piping for Waste Transfer
40 05 51	Piping Valve Specification

2.0 LIST OF APPENDICES

2.1 Appendix A – Supporting Document(s) Issued With This Specification

2.2 Appendix B – Piping Materials Index

2.3 Appendix C – Piping Material Specifications

Appendix A – Supporting Documentation to be issued with this Specification

Lists: 31269-16-LST-001, Piping Line List

Appendix B – Piping Materials Index

APPENDIX B

Low Activity Waste Pretreatment System

Piping Materials Index

SPECIFICATION DESIGNATION	MATERIAL OF CONSTRUCTION	ASME PRESSURE CLASS	CORROSION / EROSION ALLOWANCE	SPECIFICATION DESIGN LIMITS	SIZE RANGE	DESIGN / INSTALLATION CODE	RFS (1)	LOCATION / PROXIMITY TO CELLS	SERVICE
P1	Carbon Steel	125/150	0.063"	*150 PSIG @ -20/100°F* *150 PSIG @ 200°F*	1/2" - 16"	ASME B31.3 Normal Fluid Service	N	Out Cell	**Glycol/Water (G)**
P2	Lined Ductile Iron	TBD	TBD	TBD	TBD	TBD	TBD	TBD	**Fire Protection Above-Grade (FPAG)**- ON HOLD
P3	Carbon Steel	150	0.063"	*100 PSIG @ -20/100°F* *100 PSIG @ 200°F*	1/2" - 6"	ASME B31.3 Normal Fluid Service	N	Out Cell	**Sodium Nitrite - $NaNO_2$ (NAN)**
P4	304/304L Stainless Steel	150	0.063"	*165 PSIG @ -20/100°F* *165 PSIG @ 200°F*	1/2" - 12"	ASME B31.3 Normal Fluid Service	N	In/Out Cell	**0.45M Nitric Acid - HNO_3 (NA); 19M, 1M and 0.1M Sodium Hydroxide - NaOH (NAH), Chemicals (CH),** Utility Exhaust (EXH), **0.5M Oxalic Acid (CH)**
P5	316/316L Stainless Steel	300	0.063"	*400 PSIG @ -20/100°F* *400 PSIG @ 170°F*	1/2" - 12"	ASME B31.3 Normal Fluid Service	Y	In Cell	**In-Plant Waste (SL) (SN)**, Chemicals (CH), **Process Drains (DR)**, Treated Process Water (TPW), Condensate (COND), Process Vents (AIR), Fresh Resin (FR), Spent Resin (SR)
P6	304/304L Stainless Steel	150	0.063"	*275 PSIG @ -20/100°F* *230 PSIG @ 200°F*	1/2" - 12"	ASME B31.3 Normal Fluid Service	N	In/Out Cell	**Compressed Air (CA), Instrument Air (IA), Plant Air (AIR), Chilled Water (CHW), Treated Process Water (TPW), Hot Water (HW), Condensate (COND), A/G Potable Water (POT), Fresh Resin (FR), Utility Exhaust (EXH),** Process Drains (DR)
P7	316/316L Stainless Steel	300	0.063"	*720 PSIG @ -20/100°F* *620 PSIG @ 200°F*	2" - 3"	ASME B31.3 Normal Fluid Service	Y	In Ground	**Carrier Piping for Waste Trasfer Piping (SL) (SN)**
P8	Carbon Steel	300	0.063"	*50 PSIG @ -20/100°F* *50 PSIG @ 150°F*	4" - 6"	ASME B31.3 Normal Fluid Service	Y	In Ground	**Encasement Piping for Waste Transfer Lines (SL) (SN)**
P9	304/304L Stainless Steel	150	0.063"	*100 PSIG @ -20/100°F* *100 PSIG @ 200°F*	1/2" - 36"	ASME B31.3 Normal Fluid Service	Y	In/Out Cell	**Process Vents (AIR), HVAC Supply and Return Air (AIR)**
P10	PVC	N/A	0.0"	*150 PSIG @ 73°F* *132 PSIG @ 80°F*	4" - 12"	NFPA 24/ASME B31.3 Category D Service	N	In Ground	**U/G Fire Protection (FPBG)**
P11									NOT USED
P12	316L Stainless Steel Tubing	300	0.0"	*400 PSIG @ -20/100°F* *400 PSIG @ 200°F*	1/4" - 1/2"	ASME B31.3 Normal Service	N	In Cell	**Lag Tank Vent Sample System, Combustible Gas Monitors, IA Pneumatic Lines**
P13									NOT USED

General Note: Bolded services are indicative of the primary specification for that service. Non-bolded services are indicative of alternative specifications that are considered to be an upgrade in material and pressure/temperature rating for that service.
Note 1: RFS - may contain Radioactive Fluid Service

Appendix C – Piping Material Specifications

Material Specification P1

CL125/150, Carbon Steel - G

Prepared For: WRPS

Project: 31269 - Low Activity Waste Pretreatment System (LAWPS)

AECOM ATKINS AREVA

CORROSION ALLOWANCE	0.063in	DESIGN CODE	ASME B31.3
EXAMINATION	Per ASME B31.3	MATERIAL	CS
RATING CLASS	CL 125, ASME B.16.1	STRESS RELIEF	Not Req'd
TEMPERATURE LIMIT	-20F to 200F		

PRESSURE - TEMPERATURE RATINGS

Temp F	-20	100	200
Temp C	-29	38	93

psig	150	150	150
kPag	1035	1035	1035

SPECIFICATION NOTES:
13, 28, 11, 21, 22, 5

NOTE: Shaded rows are items that have been changed or added since last revision

ITEM	Notes	Rev	NPS1 / NPS2	Sch / Rat	Commodity Code	Opt	Description
PIPE			1/2" - 2" -	S-XS	PPABA0C31UCB	1	Pipe, ERW, A53 Gr B, B36.10M, T&C, coupling to be MI per B16.3,
PIPE			3" - 16" -	S-STD	PPABACC3EB00	1	Pipe, ERW, A53 Gr B Type E, B36.10M, BE., (E=0.85)
NIP			1/2" - 2" -	S-XS	PNNIPAC6C6B0	739	Nipple, pipe, smls, A106 Gr B, A733/B36.10M, 6" long, TBE,
NIP			1/2" - 2" -	S-XS	PNNIPAC3C6B0	1	Nipple, pipe, smls, A106 Gr B, A733/B36.10M, 3" long, TBE,
NIP			1/2" - 2" -	S-XS	PNNIPAK6C6B0	743	Nipple, pipe, smls, A106 Gr B, A733/B36.10M, 6" long, POE/TOE,
NIP			1/2" - 2" -	S-XS	PNNIPAK3C6B0	725	Nipple, pipe, smls, A106 Gr B, A733/B36.10M, 3" long, POE/TOE,
SWGC			3" - 4" 1/2" - 2"		PNSWC5GC4B00	1	Swage, concentric, A234 WPB, MSS-SP-95/B36.10M, BLE/TSE,
WGE			3" - 4" 1/2" - 2"		PNSWE5GC4B00	1	Swage, eccentric, A234 WPB, MSS-SP-95/B36.10M, BLE/TSE,
CAPOT			1/2" - 2"	CL 300	PSCAPBFBE970	1	Cap, thd, A197 M.I., B16.3, CL 300,
CPL			1/2" - 2"	CL 300	PSCPFBFBE970	1	Cplg full, thd, A197 M.I., B16.3, CL 300,
CPLR			3/4" - 2" 1/2" - 1-1/2"	CL 300	PSCPRB3BE970	1	Cplg red, thd, A197 M.I., B16.3, CL 300,
E45			1/2" - 2"	CL 300	PSE45BFBE970	1	45 D elbow, thd, A197 M.I., B16.3, CL 300,
E90			1/2" - 2"	CL 300	PSE90BFBE970	1	90 D elbow, thd, A197 M.I., B16.3, CL 300,
PLUG			3/4" - 2"	-	PSPLUDM0C05H	1	Plug, thd, A105, B16.11,, hex head
TEE			1/2" - 2"	CL 300	PSTEEBFBE970	1	Tee, thd, A197 M.I., B16.3, CL 300,
TRB			3/4" - 2" 1/2" - 1-1/2"	CL 300	PSTRBB3IE970	1	Tee red, thd, A197 M.I., B16.3, CL 300,
UN			1/2" - 2"	CL 300	PSUNIK3BE97B	1	Union, thd, A197 M.I., B16.39, CL 300, ground joint type, iron to iron seats
CAPBV			3" - 16"		PWCAPAAC4B00	1	Cap, B16.9, BE, A234 WPB,
E45LR			3" - 16"		PWE4LAAC4B00	1	45 LR elbow, B16.9, BE, A234 WPB,
E90LR			3" - 16"		PWE9LAAC4B00	1	90 LR elbow, B16.9, BE, A234 WPB,
TEE			3" - 16"		PWTEEAAC4B00	1	Tee, B16.9, BE, A234 WPB,
REDC			4" - 16" 3" - 14"		PWRECA1C4B00	1	Conc red, B16.9, BE x BE, A234 WPB,
REDE			4" - 16" 3" - 14"		PWREEA1C4B00	1	Ecc red, B16.9, BE x BE, A234 WPB,
TRB	28		3" - 16" 2" - 14"		PWTRBA1C4B00	1	Tee, red, B16.9, BE x BE, A234 WPB,
FOWN			3" - 16"	CL 300	PJAFBA2C052A	1	Orif WN .5" thrd tap, A105, B16.36, CL 300, RFFE, Two taps 180 degrees apart
FTHD	11		1/2" - 2"	CL 300	PFTHAABC0500	773	Flg, thrd, A105, B16.5, CL 300, RFFE,
FTHD			1/2" - 2"	CL 150	PFTHAAAC0500	1	Flg, thrd, A105, B16.5, CL 150, RFFE,
FWN	11		3" - 16"	CL 300	PFWNAABC0500	773	Flg, WN, A105, B16.5, CL 300, RFFE,
FWN	22		3" - 16"	CL 150	PFWNABAC0500	211	Flg, WN, A105, B16.5, CL 150, FFFE,
FWN			3" - 16"	CL 150	PFWNAAAC0500	1	Flg, WN, A105, B16.5, CL 150, RFFE,
BLSP			1/2" - 16" 1/2" - 16"	CL 150 CL 300	PDSBGTAC6800	1	Spec blind, A516 Gr 70N, B16.48, CL 150, RF, Flg, blind, A105, B16.5, CL 300, RFFE,

ITEM	Notes	Rev	NPS1 / NPS2	Sch / Rat	Commodity Code	Opt	Description
FBLD	11				PFBLAABC0500	773	
FBLD			1/2" - 16"	CL 150	PFBLAAAC0500	1	Flg, blind, A105, B16.5, CL 150, RFFE,
EOL			3" - 16" 1/2" - 2"	CL 3000	PSEOLKTKC055	1	Elbolet, thd, A105, Mfg. Std., CL 3000, In acc. w/project design code
LOL			3" - 16" 1/2" - 2"	CL 3000	PSLOLKTKC055	1	Latrolet, thd, A105, Mfg. Std., CL 3000, In acc. w/project design code
TOL			3" - 16" 1/2" - 2"	CL 3000	PSTOLKTKC050	1	Thredolet, A105, MSS-SP-97, CL 3000,
WOL			8" - 16" 3" - 8"		PWWOLKWC0500	1	Weldolet, MSS-SP-97, BE x BE, A105,
BALLP			3" - 6"	CL 125	VBAA1FR1BLGLCLFE	1	Valve, Ball, CL 125, FFFE, A126 CL B, lever, Reg port- TAG NUMBER: VB0S01
BALLP			8" - 10"	CL 125	VBAA1FR1BGGLCLFE	1	Valve, Ball, CL 125, FFFE, A126 CL B, GO w/side HW, Reg port- TAG NUMBER: VB0S02
BALR			1/2" - 2"	WOG 400	VBDEKTBAALFAFGWJ	1	Valve, Ball, WOG 400, FTE, B584 ALLOY 844, lever, Reg port- TAG NUMBER: VB4G01
CKS			1/2" - 2"	CL 200	VCNEJTB61B07CAWQ	1	Valve, Check, CL 200, FTE, ASTM B61,, TAG NUMBER: VCPG01
CKWF			3" - 16"	CL 125	VCWC11R1BD04CBC1	1	Valve, Check, CL 125, Wafer RF, A126 CL B,, Reg port TAG NUMBER: VC0S01
GAT			3" - 16"	CL 125	VGAA1FR1BAB2BHAG	1	Valve, Gate, CL 125, FFFE, A126 CL B., HW, Full port TAG NUMBER: VG0S01
GATR			1/2" - 2"	CL 200	VGDEJTB61AB1UPWQ	1	Valve, Gate, CL 200, FTE, ASTM B61,, HW, Conv. port TAG NUMBER: VGPG01
GAUM	13		3/4" - 3/4"	6000 PSI	VUAFPYM3DRAGGDGH	1	Valve, Gauge, 6000 PSI, MTE x FTE, A479 Gr 316, T-handle short, one SS bleed valve & two 0.5" SS hex plugs, 3 FTE ports TAG NUMBER: VUII01
GLO			3" - 14"	CL 125	VLAA1FR1BAOTBHAH	1	Valve, Globe, CL 125, FFFE, A126 CL B., HW, Reg port TAG NUMBER: VL0S01
GLOR			1/2" - 2"	CL 200	VLDEJTB61AAFUEWT	1	Valve, Globe, CL 200, FTE, ASTM B61, , HW, Reg port TAG NUMBER: VLPG01
VENT/DRAIN	21		3/4" - 2"	WOG 400	VBDEKTBAALFAFGWJ	1	Valve, Ball, WOG 400, FTE, B584 ALLOY 844, lever, Reg port TAG NUMBER: VB4G01
GASINS			1/2" - 16"	CL 150	PGFKAABESAI9	1	Gasket, insul kit, RFFE, G-11 glass reinf epoxy resin (GRE) w/teflon seal, B16.5, 1/8" thick, CL 150, , one GRE isolating sleeve , two GRE & stainless steel washers for each bolt 350F max temp Pikotek, PGE
GASO-1			1/2" - 16"	CL 150	PGFRAAAG0AA0	1	Gasket, flat ring, RFFE, non-asb aramid fiber w/nitrile binder, Garlock Blue-Gard 3000 or equal, B16.5, 1/16" thick, CL 150, ASME B16.21
GASO-2			1/2" - 16"	CL 300	PGFRAAAG0BA0	1	Gasket, flat ring, RFFE, non-asb aramid fiber w/nitrile binder, Garlock Blue-Gard 3000 or equal, B16.5, 1/16" thick, CL 300, ASME B16.21
GASO-3	5		1/2" - 16"	CL 150	PGFFABAG0AA0	1	Gasket, full face, FFFE, non-asb aramid fiber w/nitrile binder, Garlock Blue-Gard 3000 or equal, B16.5, 1/16" thick, CL 150, ASME B16.21
BLTG			1/2" - 16"		PTS2101B7H00	1	Stud bolt w/2 nuts, A193-B7 with A194-2H nuts, B18.2.1/B18.2.2.

)° Degree BRANCH CONNECTION
Legend and chart

BRANCH													
16	TEE												
14	TRB	TEE											
12	TRB	TRB	TEE										
10	TRB	TRB	TRB	TEE									
8	WOL	TRB	TRB	TRB	TEE								
6	WOL	WOL	WOL	TRB	TRB	TEE							
4	WOL	WOL	WOL	WOL	TRB	TRB	TEE						
3	WOL	WOL	WOL	WOL	WOL	TRB	TRB	TEE					
2	TOL	TOL	TOL	TOL	TOL	TOL	TOL	TRB	TET				
1.5	TOL	TOL	TOL	TOL	TOL	TOL	TOL	TOL	TRT	TET			
1	TOL	TOL	TOL	TOL	TOL	TOL	TOL	TOL	TRT	TRT	TET		
.75	TOL	TOL	TOL	TOL	TOL	TOL	TOL	TOL	TRT	TRT	TRT	TET	
.5	TOL	TOL	TOL	TOL	TOL	TOL	TOL	TOL	TRT	TRT	TRT	TRT	TET
	16	14	12	10	8	6	4	3	2	1.5	1	.75	.5

HEADER

WOL	Weldolet
TRT	Tee red, thd
TEE	Tee
TOL	Thredolet
TET	Tee, thd
TRB	Tee, red

SPECIFICATION NOTES:

5	Use full face gaskets with flat face flanges only.
1	Use only when necessary to connect to similar connections.
3	Use as block valve for instrumentation connections.
21	Use as block valve for vent and drain connections.
22	Flat face flanges shall be used to mate to C.I. valve or equipment.
28	For 3" by 2" branch reduction use a reducing tee and bevel 2" plain end pipe or use a 3" straight tee with swage.

GENERAL NOTES:

G05	Minimum pipe size shall be NPS 3/4, except for individual instrument leads, pump & compressor auxiliary piping and for reduction at instruments or other equipment normally provided with smaller than NPS 3/4 connections.

Commodity Code Valve Summary

Revised Date: 04-JAN-16

Commodity Code	
VBAA1FR1BLGLCLFE	Valve, Ball, CL 125, FFFE, A126 CL B, lever, Reg port- TAG NUMBER: VB0S01

Valve, Ball, Flanged, Long Pattern, Class 125, Flat face flanged end,ASTM A126 Class B, Floating ball, Two-piece, Regular port, -, Antistatic design, Lever operator, 304 SS, 304 SS, PTFE, PTFE, -, MSS SP-72, ASME B16.1, ASME B16.1, ASME B16.10, MSS SP-61

TYPE	: Ball, Flanged, Long Pattern
RATING	: Class 125
PRESS/TEMP LIMITS	:
ENDS	: Flat face flanged end
SCHEDULE	: -
BODY	: ASTM A126 Class B
OPERATOR	: Lever operator
PORT	: Regular port
CONFIGURATION	: Floating ball-Two-piece
BALL MATL	: 304 SS
SEAT	: PTFE
STEM	: 304 SS
SEAL	: PTFE
BOLTING	: -
OPTIONS	: Antistatic design
STANDARDS:	: Conforming to
DESIGN STD.	: MSS SP-72
END STD.	: ASME B16.1
RATING STD.	: ASME B16.1
TESTING STD.	: MSS SP-61
DIMENSIONAL STD.	: ASME B16.10

*

TAG NUMBER: VB0S01

Commodity Code Valve Summary

Revised Date: 04-JAN-16

Commodity Code

VBAA1FR1BGGLCLFE

Valve, Ball, CL 125, FFFE, A126 CL B, GO w/side HW, Reg port- TAG NUMBER: VB0S02

Valve, Ball, Flanged, Long Pattern, Class 125, Flat face flanged end,ASTM A126 Class B, Floating ball, Two-piece, Regular port, -, Antistatic design, Gear operator with side handwheel, 304 SS, 304 SS, PTFE, PTFE, -, MSS SP-72, ASME B16.1, ASME B16.1, ASME B16.10, MSS SP-61

TYPE	: Ball, Flanged, Long Pattern
RATING	: Class 125
PRESS/TEMP LIMITS	:
ENDS	: Flat face flanged end
SCHEDULE	: -
BODY	: ASTM A126 Class B
OPERATOR	: Gear operator with side handwheel
PORT	: Regular port
CONFIGURATION	: Floating ball-Two-piece
BALL MATL	: 304 SS
SEAT	: PTFE
STEM	: 304 SS
SEAL	: PTFE
BOLTING	: -
OPTIONS	: Antistatic design
STANDARDS:	: Conforming to
DESIGN STD.	: MSS SP-72
END STD.	: ASME B16.1
RATING STD.	: ASME B16.1
TESTING STD.	: MSS SP-61
DIMENSIONAL STD.	: ASME B16.10

*

TAG NUMBER: VB0S02

Commodity Code Valve Summary

Revised Date: 23-DEC-15

Commodity Code

VBDEKTBAALFAFGWJ

Valve, Ball, WOG 400, FTE, B584 ALLOY 844, lever, Reg port- TAG NUMBER: VB4G01

Valve, Ball, Female Threaded Ends, Regular Port, WOG 400, Female threaded end,bronze, ASTM B584, ALLOY 844, Floating ball, Two-piece, Regular port, - -, Lever operator, Chrome plated brass, Brass, PTFE, PTFE, -, MSS SP-110 MSS SP-110 ASME B1.20.1 Manufacturers standard MSS SP-110

TYPE	: Ball, Female Threaded Ends, Regular Port
RATING	: WOG 400
PRESS/TEMP LIMITS	:
ENDS	: Female threaded end
SCHEDULE	: -
BODY	: bronze, ASTM B584, ALLOY 844
OPERATOR	: Lever operator
PORT	: Regular port
CONFIGURATION	: Floating ball-Two-piece
BALL MATL	: Chrome plated brass
SEAT	: PTFE
STEM	: Brass
SEAL	: PTFE
BOLTING	: -
OPTIONS	: -
STANDARDS:	: Conforming to
DESIGN STD.	: MSS SP-110
END STD.	: ASME B1.20.1
RATING STD.	: MSS SP-110
TESTING STD.	: MSS SP-110
DIMENSIONAL STD.	: Manufacturers standard

*

TAG NUMBER: VB4G01

Commodity Code Valve Summary

Revised Date: 18-OCT-13

Commodity Code

VCNEJTB61B07CAWQ

Valve, Check, CL 200, FTE, ASTM B61, -, - - TAG NUMBER: VCPG01

Valve, Check, Swing, Female Threaded Ends, Y Pattern, Class 200, Female threaded end, ASTM B61, bronze, - - - - - Bronze, Threaded cover, ASTM B61 (Bronze), Bronze,horizontal with cover up or vertical upward flow, MSS SP-80 MSS SP-80 ASME B1.20.1 Manufacturers standard MSS SP-80

TYPE	: Check, Swing, Female Threaded Ends, Y Pattern
DESIGN	: -
RATING	: Class 200
ENDS	: Female threaded end
SCHEDULE	: -
BODY / COVER MATL	: ASTM B61, bronze / ASTM B61 (Bronze)
COVER	: Threaded cover
API TRIM	: -
INSTALLATION	: horizontal with cover up or vertical upward flow
PORT	: -
DISC / SEAT	: Bronze / Bronze
GASKET	: -
BOLTING	: -
HINGE PIN	: -
SPRINGS	: -
OPTIONS	: -
STANDARDS:	: Conforming to
DESIGN STD.	: MSS SP-80
END STD.	: ASME B1.20.1
RATING STD.	: MSS SP-80
TESTING STD.	: MSS SP-80
DIMENSIONAL STD.	: Manufacturers standard

* TAG NUMBER: VCPG01

Commodity Code Valve Summary

Revised Date: 23-DEC-15

Commodity Code

VCWC11R1BD04CBCI

Valve, Check, CL 125, Wafer RF, A126 CL B, -, Reg port - TAG NUMBER: VC0S01

Valve, Check, Wafer, Class 125, Wafer type raised face, ASTM A126 Class B, Dual Plate with Return Spring Regular port - - 316 SS Pin - , Inconel - X Spring, Bronze,horizontal with hinge pin vertical/vertical with upward flow, API 594, ASME B16.1, ASME B16.1, API 594 Type A, API 598

TYPE	: Check, Wafer
DESIGN	: Dual Plate with Return Spring
RATING	: Class 125
ENDS	: Wafer type raised face
SCHEDULE	: -
BODY / COVER MATL	: ASTM A126 Class B / -
COVER	: -
API TRIM	: -
INSTALLATION	: horizontal with hinge pin vertical/vertical with upward flow
PORT	: Regular port
DISC / SEAT	: - / Bronze
GASKET	: -
BOLTING	: -
HINGE PIN	: -
SPRINGS	: Inconel - X Spring
OPTIONS	: 316 SS Pin
STANDARDS:	: Conforming to
DESIGN STD.	: API 594
END STD.	: ASME B16.1
RATING STD.	: ASME B16.1
TESTING STD.	: API 598
DIMENSIONAL STD.	: API 594 Type A

* TAG NUMBER: VC0S01

Commodity Code Valve Summary

Revised Date: 18-OCT-13

Commodity Code

VGAA1FR1BAB2BHAG

Valve, Gate, CL 125, FFFE, A126 CL B, -, HW, Full port - TAG NUMBER: VG0S01

Valve, Gate, Flanged Long Pattern, Class 125, Flat face flanged end, ASTM A126 Class B, Solid wedge Full port - - - -, Handwheel operator, Bolted bonnet, Manufacturers standard, Mfg Std, Asbestos Free, Outside Screw & Yoke, Bronze, Mfg Std, Asbestos Free Bronze, MSS SP-70, MSS SP-70, ASME B16.1, ASME B16.10, API 598

TYPE	: Gate, Flanged Long Pattern
RATING	: Class 125
ENDS	: Flat face flanged end
SCHEDULE	: -
BODY / BONNET MATL	: ASTM A126 Class B / -
WEDGE TYPE	: Solid wedge
WEDGE MATERIAL	: -
API TRIM	: -
OPERATOR	: Handwheel operator
PORT	: Full port
CONFIGURATION	: Outside Screw & Yoke
BONNET TYPE	: Bolted bonnet
SEAT	: Bronze
STEM	: Bronze
STEM PACKING	: Mfg Std, Asbestos Free
BONNET BOLTING	: Manufacturers standard
BONNET GASKET	: Mfg Std, Asbestos Free
OPTIONS	: -,
STANDARDS:	: Conforming to
DESIGN STD.	: MSS SP-70
END STD.	: ASME B16.1
RATING STD.	: MSS SP-70
TESTING STD.	: API 598
DIMENSIONAL STD.	: ASME B16.10

* TAG NUMBER: VG0S01

Commodity Code Valve Summary

Revised Date: 18-OCT-13

Commodity Code

VGDEJTB61AB1UPWQ

Valve, Gate, CL 200, FTE, ASTM B61, -, HW, Conv. port - TAG NUMBER: VGPG01

Valve, Gate, Female Threaded Ends, Regular Port, Class 200, Female threaded end, ASTM B61, bronze, Solid wedge Conventional port - - - - , Handwheel operator, Union ASTM B61 (Bronze) Manufacturers standard Mfg Std, Asbestos Free Inside Screw Rising Stem Bronze Mfg Std, Asbestos Free Bronze, MSS SP-80 MSS SP-80 ASME B1.20.1 Manufacturers standard MSS SP-80

TYPE	: Gate, Female Threaded Ends, Regular Port
RATING	: Class 200
ENDS	: Female threaded end
SCHEDULE	: -
BODY / BONNET MATL	: ASTM B61, bronze / ASTM B61 (Bronze)
WEDGE TYPE	: Solid wedge
WEDGE MATERIAL	: -
API TRIM	: -
OPERATOR	: Handwheel operator
PORT	: Conventional port
CONFIGURATION	: Inside Screw Rising Stem
BONNET TYPE	: Union
SEAT	: Bronze
STEM	: Bronze
STEM PACKING	: Mfg Std, Asbestos Free
BONNET BOLTING	: Manufacturers standard
BONNET GASKET	: Mfg Std, Asbestos Free
OPTIONS	: -,
STANDARDS:	: Conforming to
DESIGN STD.	: MSS SP-80
END STD.	: ASME B1.20.1
RATING STD.	: MSS SP-80
TESTING STD.	: MSS SP-80
DIMENSIONAL STD.	: Manufacturers standard

* TAG NUMBER: VGPG01

Commodity Code Valve Summary

Revised Date: 14-JAN-16

Commodity Code

VUAFPYM3DRAGGDGH

Valve, Gauge, 6000 PSI, MTE x FTE, A479 Gr 316, T-handle short, one SS bleed valve & two 0.5" SS hex plugs, 3 FTE ports TAG NUMBER: VUII01

Valve, Gauge, Male Thread End x Multi Female Threaded End, Reducing, 6000 PSI, Male threaded end x female threaded end, ASTM A479 Grade 316, one SS bleed valve & two 0.5" SS hex plugs, 3 Female threaded ports, Short T-handle operator, Outside Screw & Yoke, 316SS, PTFE, Integral Seat, MSS SP-105, ASME B16.34, ASME B1.20.1, Manufacturers standard, MSS SP-61

TYPE : Gauge, Male Thread End x Multi Female Threaded End, Reducing
RATING : 6000 PSI
ENDS : Male threaded end x female threaded end
BODY MATL : ASTM A479 Grade 316
API TRIM :
OPERATOR : Short T-handle operator
PORT :
CONFIGURATION : Outside Screw & Yoke
BONNET TYPE :
SEAT : Integral Seat
STEM : 316SS
STEM PACKING : PTFE
OPTIONS : one SS bleed valve & two 0.5" SS hex plugs 3 Female threaded ports

STANDARDS: : Conforming to
DESIGN STD. : MSS SP-105
END STD. : ASME B1.20.1
RATING STD. : ASME B16.34
TESTING STD. : MSS SP-61
DIMENSIONAL STD. : Manufacturers standard

* TAG NUMBER: VUII01

Commodity Code Valve Summary

Revised Date: 18-OCT-13

Commodity Code

VLAA1FR1BAOTBHAH

Valve, Globe, CL 125, FFFE, A126 CL B, -, HW, Reg port - TAG NUMBER: VL0S01

Valve, Globe, Flanged Ends, Long pattern, Class 125, Flat face flanged end, ASTM A126 Class B, T-Body Regular port - - - - - , Handwheel operator, Bolted bonnet, Manufacturers standard, Mfg Std, Asbestos Free, Outside Screw & Yoke, Bronze, Mfg Std, Asbestos Free Bronze, MSS SP-85, MSS SP-70, ASME B16.1, ASME B16.10, API 598

TYPE	: Globe, Flanged Ends, Long pattern
RATING	: Class 125
ENDS	: Flat face flanged end
SCHEDULE	: -
BODY / BONNET MATL	: ASTM A126 Class B / -
CLOSURE	: -
DISC / PLUG MATL	: -
API TRIM	: -
OPERATOR	: Handwheel operator
PORT	: Regular port
CONFIGURATION	: Outside Screw & Yoke
BONNET TYPE	: Bolted bonnet
SEAT	: Bronze
STEM	: Bronze
STEM PACKING	: Mfg Std, Asbestos Free
BONNET BOLTING	: Manufacturers standard
BONNET GASKET	: Mfg Std, Asbestos Free
OPTIONS	: -
STANDARDS:	: Conforming to
DESIGN STD.	: MSS SP-85
END STD.	: ASME B16.1
RATING STD.	: MSS SP-70
TESTING STD.	: API 598
DIMENSIONAL STD.	: ASME B16.10

* TAG NUMBER: VL0S01

Commodity Code Valve Summary

Revised Date: 24-OCT-13

Commodity Code

VLDEJTB61AAFUEWT

Valve, Globe, CL 200, FTE, ASTM B61, , HW, Reg port TAG NUMBER: VLPG01

Valve, Globe, Female Threaded End, Regular Port, Class 200, Female threaded end, ASTM B61, bronze, Regular port Plug Type ASTM A276 S42000 SS, Handwheel operator, Union ASTM B61 (Bronze) Manufacturers standard Mfg Std, Asbestos Free Bronze Mfg Std, Asbestos Free ASTM A276 S42000 SS, MSS SP-80 Type 3 MSS SP-80 ASME B1.20.1 Manufacturers standard MSS SP-80

TYPE	: Globe, Female Threaded End, Regular Port
RATING	: Class 200
ENDS	: Female threaded end
SCHEDULE	:
BODY / BONNET MATL	: ASTM B61, bronze / ASTM B61 (Bronze)
CLOSURE	: Plug Type
DISC / PLUG MATL	: ASTM A276 S42000 SS
API TRIM	:
OPERATOR	: Handwheel operator
PORT	: Regular port
CONFIGURATION	:
BONNET TYPE	: Union
SEAT	: ASTM A276 S42000 SS
STEM	: Bronze
STEM PACKING	: Mfg Std, Asbestos Free
BONNET BOLTING	: Manufacturers standard
BONNET GASKET	: Mfg Std, Asbestos Free
OPTIONS	:
STANDARDS:	: Conforming to
DESIGN STD.	: MSS SP-80 Type 3
END STD.	: ASME B1.20.1
RATING STD.	: MSS SP-80
TESTING STD.	: MSS SP-80
DIMENSIONAL STD.	: Manufacturers standard

* TAG NUMBER: VLPG01

Commodity Code Valve Summary

Revised Date: 23-DEC-15

Commodity Code

VBDEKTBAALFAFGWJ

Valve, Ball, WOG 400, FTE, B584 ALLOY 844, lever, Reg port- TAG NUMBER: VB4G01

Valve, Ball, Female Threaded Ends, Regular Port, WOG 400, Female threaded end,bronze, ASTM B584, ALLOY 844, Floating ball, Two-piece, Regular port, - -, Lever operator, Chrome plated brass, Brass, PTFE, PTFE, -, MSS SP-110 MSS SP-110 ASME B1.20.1 Manufacturers standard MSS SP-110

TYPE	: Ball, Female Threaded Ends, Regular Port
RATING	: WOG 400
PRESS/TEMP LIMITS	:
ENDS	: Female threaded end
SCHEDULE	: -
BODY	: bronze, ASTM B584, ALLOY 844
OPERATOR	: Lever operator
PORT	: Regular port
CONFIGURATION	: Floating ball-Two-piece
BALL MATL	: Chrome plated brass
SEAT	: PTFE
STEM	: Brass
SEAL	: PTFE
BOLTING	: -
OPTIONS	: -
STANDARDS:	: Conforming to
DESIGN STD.	: MSS SP-110
END STD.	: ASME B1.20.1
RATING STD.	: MSS SP-110
TESTING STD.	: MSS SP-110
DIMENSIONAL STD.	: Manufacturers standard

*

TAG NUMBER: VB4G01

Material Specification P3

CL150, Carbon Steel - NAN

Prepared For: WRPS

Project: 31269 - Low Activity Waste Pretreatment System (LAWPS)

AECOM ATKINS AREVA

CORROSION ALLOWANCE	0.063in	DESIGN CODE	ASME B31.3
EXAMINATION	Per ASME B31.3	MATERIAL	CS
RATING CLASS	CL150, ASME B16.5	STRESS RELIEF	Not Req'd
TEMPERATURE LIMIT	-20F to 200F		

PRESSURE - TEMPERATURE RATINGS

Temp F	-20	100	200
Temp C	-29	38	93

psig	100	100	100
kPag	690	690	690

SPECIFICATION NOTES:
13, 11, 21, 27

NOTE: Shaded rows are items that have been changed or added since last revision

ITEM	Notes	Rev	NPS1 / NPS2	Sch / Rat	Commodity Code	Opt	Description
PIPE			1/2" - 1-1/2" -	S-XS	PPAAA0C6BP00	1	Pipe, smls, A106 Gr B, B36.10M, PE.,
PIPE			2" - 6" -	S-STD	PPAAA0C6BB00	1	Pipe, smls, A106 Gr B, B36.10M, BE.,
NIP			1/2" - 1-1/2" -	S-XS	PNNIPAC3C6B0	721	Nipple, pipe, smls, A106 Gr B, A733/B36.10M, 3" long, TBE,
NIP			1/2" - 1-1/2" -	S-XS	PNNIPAB6C6B0	740	Nipple, pipe, smls, A106 Gr B, A733/B36.10M, 6" long, PBE,
NIP			1/2" - 1-1/2" -	S-XS	PNNIPAB3C6B0	1	Nipple, pipe, smls, A106 Gr B, A733/B36.10M, 3" long, PBE,
NIP			1/2" - 1-1/2" -	S-XS	PNNIPAK3C6B0	725	Nipple, pipe, smls, A106 Gr B, A733/B36.10M, 3" long, POE/TOE,
NIP			1/2" - 1-1/2" -	S-XS	PNNIPAC6C6B0	739	Nipple, pipe, smls, A106 Gr B, A733/B36.10M, 6" long, TBE,
NIP			1/2" - 1-1/2" -	S-XS	PNNIPAK6C6B0	743	Nipple, pipe, smls, A106 Gr B, A733/B36.10M, 6" long, POE/TOE,
SWGC			2" - 4" 1/2" - 1-1/2"		PNSWC5FC4E00	1	Swage, concentric, A234 WPB-S, MSS-SP-95/B36.10M, BLE/PSE,
SWGE			2" - 4" 1/2" - 1-1/2"		PNSWE5FC4E00	1	Swage, eccentric, A234 WPB-S, MSS-SP-95/B36.10M, BLE/PSE,
CAPOT			1/2" - 1-1/2"	CL 3000	PRCAPDSKC050	1	Cap, SW, A105, B16.11, CL 3000,
CPL			1/2" - 1-1/2"	CL 3000	PRCPFDSKC050	1	Cplg full, SW, A105, B16.11, CL 3000,
CPLR			3/4" - 1-1/2" 1/2" - 1"	CL 3000	PRCPRD2KC050	1	Cplg red, SW, A105, B16.11, CL 3000,
E45			1/2" - 1-1/2"	CL 3000	PRE45DSKC050	1	45 D elbow, SW, A105, B16.11, CL 3000,
E90			1/2" - 1-1/2"	CL 3000	PRE90DSKC050	1	90 D elbow, SW, A105, B16.11, CL 3000,
TEE			1/2" - 1-1/2"	CL 3000	PRTEEDSKC050	1	Tee, SW, A105, B16.11, CL 3000,
TRB			3/4" - 1-1/2" 1/2" - 1"	CL 3000	PRTRBD2KC050	1	Tee red, SW, A105, B16.11, CL 3000,
UN			1/2" - 1-1/2"	CL 3000	PRUNIJ2KC059	1	Union, SW, A105, MSS-SP-83, CL 3000, ground joint type, integral seat
CAPOT			1/2" - 1-1/2"	CL 3000	PSCAPDFKC050	541	Cap, thd, A105, B16.11, CL 3000,
PLUG			1/2" - 1-1/2"	-	PSPLUDM0C05H	1	Plug, thd, A105, B16.11,, hex head
CAPBV			2" - 6"		PWCAPAAC4B00	1	Cap, B16.9, BE, A234 WPB,
E45LR			2" - 6"		PWE4LAAC4B00	1	45 LR elbow, B16.9, BE, A234 WPB,
E90LR			2" - 6"		PWE9LAAC4B00	1	90 LR elbow, B16.9, BE, A234 WPB,
TEE			2" - 6"		PWTEEAAC4B00	1	Tee, B16.9, BE, A234 WPB,
REDC			3" - 6" 2" - 4"		PWRECA1C4B00	1	Conc red, B16.9, BE x BE, A234 WPB,
REDE			3" - 6" 2" - 4"		PWREEA1C4B00	1	Ecc red, B16.9, BE x BE, A234 WPB,
TRB	27		2" - 6" 1-1/2" - 4"		PWTRBA1C4B00	1	Tee, red, B16.9, BE x BE, A234 WPB,
FOWN			2" - 6"	CL 300	PJBFBA2C052A	1	Orif WN .5" SW tap, A105, B16.36, CL 300, RFFE, Two taps 180 degrees apart
FSW	11		1/2" - 1-1/2"	CL 300	PFSWAABC0500	773	Flg, SW, A105, B16.5, CL 300, RFFE,
FSW			1/2" - 1-1/2"	CL 150	PFSWAAAC0500	1	Flg, SW, A105, B16.5, CL 150, RFFE,

ITEM	Notes	Rev	NPS1 / NPS2	Sch / Rat	Commodity Code	Opt	Description
FWN			2" - 6"	CL 150	PFWNAAAC0500	1	Flg, WN, A105, B16.5, CL 150, RFFE,
FWN	11		2" - 6"	CL 300	PFWNAABC0500	4996	Flg, WN, A105, B16.5, CL 300, RFFE,
BLSP			1/2" - 6"	CL 150	PDSBGTAC67AB	1	Spec blind, A516 Gr 70, B16.48, CL 150, RF, impact testing to minus 20F
FBLD			1/2" - 6"	CL 150	PFBLAAAC0500	1	Flg, blind, A105, B16.5, CL 150, RFFE,
FBLD	11		1/2" - 6"	CL 300	PFBLAABC0500	773	Flg, blind, A105, B16.5, CL 300, RFFE,
EOL			2" - 6" 1/2" - 1-1/2"	CL 3000	PREOLKSKC055	1	Elbolet, SW, A105, Mfg. Std., CL 3000, In acc. w/project design code
LOL			2" - 6" 1/2" - 1-1/2"	CL 3000	PRLOLKSKC055	1	Latrolet, SW, A105, Mfg. Std., CL 3000, In acc. w/project design code
SOL			2" - 6" 1/2" - 1-1/2"	CL 3000	PRSOLKSKC050	1	Sockolet, A105, MSS-SP-97, CL 3000,
TOL			2" - 6" 1/2" - 1-1/2"	CL 3000	PSTOLKTKC050	1	Thredolet, A105, MSS-SP-97, CL 3000,
WOL			4" - 6" 2" - 2"		PWWOLKWC0500	1	Weldolet, MSS-SP-97, BE x BE, A105,
BALF			1/2" - 1-1/2"	1000 PSI CWP	VBFD7SC6BLAVCKBC	1	Valve, Ball, 1000 PSI CWP, SW, A216 WCB, lever, Full port- TAG NUMBER: VBDA02
CKL			1/2" - 1-1/2"	CL 800	VCLDHSC05BBQETCV	1	Valve, Check, CL 800, SW, A105, Trim 8, Conv. port TAG NUMBER: VC8A01
CKS			2" - 6"	CL 150	VCAAAAC6BB1AETFK	1	Valve, Check, CL 150, RFFE, A216 WCB, Trim 8, Conv. port TAG NUMBER: VC1A01
GAUM	13		3/4" - 3/4"	6000 PSI	VUADPUM3DRAGGDGH	1	Valve, Gauge, 6000 PSI, PE X FTE, A479 Gr 316, T-handle short, one SS bleed valve & two 0.5" SS hex plugs, 3 FTE ports TAG NUMBER: VUII02
GLO			2" - 6"	CL 150	VLAAAAC6BADTEVFK	1	Valve, Globe, CL 150, RFFE, A216 WCB, Trim 8, HW, Reg port TAG NUMBER: VL1A01
GLOR			1/2" - 1-1/2"	CL 800	VLDDHSC05ADTEVCV	1	Valve, Globe, CL 800, SW, A105, Trim 8, HW, Reg port TAG NUMBER: VL8A01
VENT/DRAIN	21		3/4" - 1-1/2"	1000 PSI CWP	VBFG7WC6BLAVCKCG	1	Valve, Ball, 1000 PSI CWP, SW x FTE, A216 WCB, lever, Full port- TAG NUMBER: VBDA01
GASO-1			1/2" - 6"	CL 150	PGFRAAAPCAGH	1	Gasket, flat ring, RFFE, Microcellular PTFE, B16.5, 1/16" thick, CL 150, ASME B16.21, Garlock Gylon 3545 or equal
GASO-2			1/2" - 6"	CL 300	PGFRAAAPCBGH	1	Gasket, flat ring, RFFE, Microcellular PTFE, B16.5, 1/16" thick, CL 300, ASME B16.21, Garlock Gylon 3545 or equal
BLTG			1/2" - 6"		PTS2101B7H00	1	Stud bolt w/2 nuts, A193-B7 with A194-2H nuts, B18.2.1/B18.2.2.

90° Degree BRANCH CONNECTION
Legend and chart

BRANCH	6	4	3	2	1.5	1	.75	.5
6	TEE							
4	TRB	TEE						
3	TRB	TRB	TEE					
2	WOL	WOL	TRB	TEE				
1.5	SOL	SOL	SOL	TRB	TES			
1	SOL	SOL	SOL	SOL	TRS	TES		
.75	SOL	SOL	SOL	SOL	TRS	TRS	TES	
.5	SOL	SOL	SOL	SOL	TRS	TRS	TRS	TES

HEADER

SOL	Sockolet
TES	Tee, SW
TRS	Tee red, SW
TRB	Tee, red
TEE	Tee
WOL	Weldolet

SPECIFICATION NOTES:

11	Use only when necessary to connect to similar connections.
13	Use as block valve for instrumentation connections.
21	Use as block valve for vent and drain connections.
27	For 2" by 1-1/2" branch reduction use a reducing tee and bevel the 1-1/2" plain end branch pipe or use a 2" straight tee with swage.

GENERAL NOTES:

G05	Minimum pipe size shall be NPS 3/4, except for individual instrument leads, pump & compressor auxiliary piping and for reduction at instruments or other equipment normally provided with smaller than NPS 3/4 connections.

Commodity Code Valve Summary

Revised Date: 04-JAN-16

Commodity Code	
VBFD7SC6BLAVCKBC	Valve, Ball, 1000 PSI CWP, SW, A216 WCB, lever, Full port- TAG NUMBER: VBDA02

Valve, Ball, Socketweld, Full Port, 1000 PSI CWP, Socketweld,ASTM A216 WCB, Floating ball, Three-piece, Full port, -, Antistatic design, Lever operator, 316SS, 316SS, RTFE, PTFE, A193 B7/ A194 2H, ASME B16.34 ASME B16.34 ASME B16.11 Manufacturers standard API 598

TYPE	: Ball, Socketweld, Full Port
RATING	: 1000 PSI CWP
PRESS/TEMP LIMITS	:
ENDS	: Socketweld
SCHEDULE	: -
BODY	: ASTM A216 WCB
OPERATOR	: Lever operator
PORT	: Full port
CONFIGURATION	: Floating ball-Three-piece
BALL MATL	: 316SS
SEAT	: RTFE
STEM	: 316SS
SEAL	: PTFE
BOLTING	: A193 B7/ A194 2H
OPTIONS	: Antistatic design
STANDARDS:	: Conforming to
DESIGN STD.	: ASME B16.34
END STD.	: ASME B16.11
RATING STD.	: ASME B16.34
TESTING STD.	: API 598
DIMENSIONAL STD.	: Manufacturers standard

*

TAG NUMBER: VBDA02

Commodity Code Valve Summary

Revised Date: 23-DEC-15

Commodity Code

VCLDHSC05BBQETCV

Valve, Check, CL 800, SW, A105, Trim 8, Conv. port - TAG NUMBER: VC8A01

Valve, Check Lift, Socketweld Conventional Port, Class 800, Socketweld, ASTM A105, Piston lift, Conventional port, API trim 8, -, with spring -, Bolted cover, -, A193 B7/ A194 2H, PTFE or RTFE, - - -,horizontal with cover up or vertical upward flow, API 602, API 602, ASME B16.11, Manufacturers standard, API 598

TYPE	: Check Lift, Socketweld Conventional Port
DESIGN	: Piston lift
RATING	: Class 800
ENDS	: Socketweld
SCHEDULE	: -
BODY / COVER MATL	: ASTM A105 / -
COVER	: Bolted cover
API TRIM	: API trim 8
INSTALLATION	: horizontal with cover up or vertical upward flow
PORT	: Conventional port
DISC / SEAT	: - / -
GASKET	: PTFE or RTFE
BOLTING	: A193 B7/ A194 2H
HINGE PIN	: -
SPRINGS	: -
OPTIONS	: with spring
STANDARDS:	: Conforming to
DESIGN STD.	: API 602
END STD.	: ASME B16.11
RATING STD.	: API 602
TESTING STD.	: API 598
DIMENSIONAL STD.	: Manufacturers standard

* TAG NUMBER: VC8A01

Commodity Code Valve Summary

Revised Date: 01-DEC-15

Commodity Code	
VCAAAAC6BB1AETFK	Valve, Check, CL 150, RFFE, A216 WCB, Trim 8, Conv. port - TAG NUMBER: VC1A01

Valve, Check, Swing, Flanged, Long Pattern, Class 150, Raised face flanged end, ASTM A216 WCB, - Conventional port API trim 8 - - , Bolted cover, -, A193 B7/ A194 2H, PTFE or RTFE, - - -,horizontal with cover up or vertical upward flow, B16.34 and API 600 (as applicable), ASME B16.34, ASME B16.5, ASME B16.10, API 598

TYPE	: Check, Swing, Flanged, Long Pattern
DESIGN	: -
RATING	: Class 150
ENDS	: Raised face flanged end
SCHEDULE	: -
BODY / COVER MATL	: ASTM A216 WCB / -
COVER	: Bolted cover
API TRIM	: API trim 8
INSTALLATION	: horizontal with cover up or vertical upward flow
PORT	: Conventional port
DISC / SEAT	: / -
GASKET	: PTFE or RTFE
BOLTING	: A193 B7/ A194 2H
HINGE PIN	: -
SPRINGS	: -
OPTIONS	: -
STANDARDS:	: Conforming to
DESIGN STD.	: B16.34 and API 600 (as applicable)
END STD.	: ASME B16.5
RATING STD.	: ASME B16.34
TESTING STD.	: API 598
DIMENSIONAL STD.	: ASME B16.10

* TAG NUMBER: VC1A01

Commodity Code Valve Summary

Revised Date: 14-JAN-16

Commodity Code

VUADPUM3DRAGGDGH

Valve, Gauge, 6000 PSI, PE X FTE, A479 Gr 316, T-handle short, one SS bleed valve & two 0.5" SS hex plugs, 3 FTE ports TAG NUMBER: VUII02

Valve, Gauge, Male Welded End x Multi Female Threaded End, Reducing, 6000 PSI, Male plain end x female threaded end, ASTM A479 Grade 316, one SS bleed valve & two 0.5" SS hex plugs, 3 Female threaded ports, Short T-handle operator, Outside Screw & Yoke, 316SS, PTFE, Integral Seat, MSS SP-105, ASME B16.34, ASME B1.20.1, Manufacturers standard, MSS SP-61

TYPE : Gauge, Male Welded End x Multi Female Threaded End, Reducing
RATING : 6000 PSI
ENDS : Male plain end x female threaded end
BODY MATL : ASTM A479 Grade 316
API TRIM :
OPERATOR : Short T-handle operator
PORT :
CONFIGURATION : Outside Screw & Yoke
BONNET TYPE :
SEAT : Integral Seat
STEM : 316SS
STEM PACKING : PTFE
OPTIONS : one SS bleed valve & two 0.5" SS hex plugs 3 Female threaded ports

STANDARDS: : Conforming to
DESIGN STD. : MSS SP-105
END STD. : ASME B1.20.1
RATING STD. : ASME B16.34
TESTING STD. : MSS SP-61
DIMENSIONAL STD. : Manufacturers standard

* TAG NUMBER: VUII02

Commodity Code Valve Summary

Revised Date: 07-DEC-15

Commodity Code

VLAAAAC6BADTEVFK

Valve, Globe, CL 150, RFFE, A216 WCB, Trim 8, HW, Reg port - TAG NUMBER: VL1A01

Valve, Globe, Flanged Ends, Long pattern, Class 150, Raised face flanged end, ASTM A216 WCB, T-Body, Regular port, API trim 8, -, -, Disc Type, Handwheel operator, Bolted bonnet, -, A193 B7/ A194 2H, PTFE or RTFE, Outside Screw & Yoke, -, PTFE, -, B16.34 and API 600 (as applicable), ASME B16.34, ASME B16.5, ASME B16.10, API 598

TYPE	: Globe, Flanged Ends, Long pattern
RATING	: Class 150
ENDS	: Raised face flanged end
SCHEDULE	: -
BODY / BONNET MATL	: ASTM A216 WCB / -
CLOSURE	: Disc Type
DISC / PLUG MATL	:
API TRIM	: API trim 8
OPERATOR	: Handwheel operator
PORT	: Regular port
CONFIGURATION	: Outside Screw & Yoke
BONNET TYPE	: Bolted bonnet
SEAT	: -
STEM	: -
STEM PACKING	: PTFE
BONNET BOLTING	: A193 B7/ A194 2H
BONNET GASKET	: PTFE or RTFE
OPTIONS	: -
STANDARDS:	: Conforming to
DESIGN STD.	: B16.34 and API 600 (as applicable)
END STD.	: ASME B16.5
RATING STD.	: ASME B16.34
TESTING STD.	: API 598
DIMENSIONAL STD.	: ASME B16.10

* TAG NUMBER: VL1A01

Commodity Code Valve Summary

Revised Date: 23-DEC-15

Commodity Code

VLDDHSC05ADTEVCV

Valve, Globe, CL 800, SW, A105, Trim 8, HW, Reg port - TAG NUMBER: VL8A01

Valve, Globe, Socketweld, Regular Port, Class 800, Socketweld, ASTM A105, T-Body, Regular port, API trim 8, -, -, Disc Type, Handwheel operator, Bolted bonnet, -, A193 B7/ A194 2H, PTFE or RTFE, Outside Screw & Yoke, -, PTFE, -, API 602, API 602, ASME B16.11, Manufacturers standard, API 598

TYPE	: Globe, Socketweld, Regular Port
RATING	: Class 800
ENDS	: Socketweld
SCHEDULE	: -
BODY / BONNET MATL	: ASTM A105 / -
CLOSURE	: Disc Type
DISC / PLUG MATL	:
API TRIM	: API trim 8
OPERATOR	: Handwheel operator
PORT	: Regular port
CONFIGURATION	: Outside Screw & Yoke
BONNET TYPE	: Bolted bonnet
SEAT	: -
STEM	: -
STEM PACKING	: PTFE
BONNET BOLTING	: A193 B7/ A194 2H
BONNET GASKET	: PTFE or RTFE
OPTIONS	: -
STANDARDS:	: Conforming to
DESIGN STD.	: API 602
END STD.	: ASME B16.11
RATING STD.	: API 602
TESTING STD.	: API 598
DIMENSIONAL STD.	: Manufacturers standard

* TAG NUMBER: VL8A01

Commodity Code Valve Summary

Revised Date: 04-JAN-16

Commodity Code

VBFG7WC6BLAVCKCG

Valve, Ball, 1000 PSI CWP, SW x FTE, A216 WCB, lever, Full port-
TAG NUMBER: VBDA01

Valve, Ball, Socketweld X Female, Threaded Ends, Full Port, 1000 PSI CWP, Socketweld x female threaded end,ASTM A216 WCB, Floating ball, Three-piece, Full port, -, Antistatic design, Lever operator, 316SS, 316SS, RTFE, PTFE, A193 B7/ A194 2H, ASME B16.34 ASME B16.34 ASME B16.11 / ASME B1.20.1 Manufacturers standard API 598

TYPE	: Ball, Socketweld X Female, Threaded Ends, Full Port
RATING	: 1000 PSI CWP
PRESS/TEMP LIMITS	:
ENDS	: Socketweld x female threaded end
SCHEDULE	: -
BODY	: ASTM A216 WCB
OPERATOR	: Lever operator
PORT	: Full port
CONFIGURATION	: Floating ball-Three-piece
BALL MATL	: 316SS
SEAT	: RTFE
STEM	: 316SS
SEAL	: PTFE
BOLTING	: A193 B7/ A194 2H
OPTIONS	: Antistatic design
STANDARDS:	: Conforming to
DESIGN STD.	: ASME B16.34
END STD.	: ASME B16.11 / ASME B1.20.1
RATING STD.	: ASME B16.34
TESTING STD.	: API 598
DIMENSIONAL STD.	: Manufacturers standard

*

TAG NUMBER: VBDA01

Material Specification P4

CL150, 304/304L SS - NA, NAH, CH, EXH, TPW

Prepared For: WRPS

Project: 31269 - Low Activity Waste Pretreatment System (LAWPS)

AECOM ATKINS AREVA

'ORROSION ALLOWANCE	0.063in	DESIGN CODE	ASME B31.3
EXAMINATION	Per ASME B31.3	MATERIAL	304/304L Dual Marked
RATING CLASS	CL150, ASME B16.5	STRESS RELIEF	Not Req'd
TEMPERATURE LIMIT	-20F to 200F		

PRESSURE - TEMPERATURE RATINGS

Temp F	-20	100	200
Temp C	-29	38	93

psig	165	165	165
kPag	1140	1140	1140

SPECIFICATION NOTES:
13, 21, 11, 02, 05

NOTE: Shaded rows are items that have been changed or added since last revision

ITEM	Notes	Rev	NPS1 / NPS2	Sch / Rat	Commodity Code	Opt	Description
PIPE			1/2" - 12" -	S-40S	PPSAB0S2FB00	1	Pipe, smls, SS, A312 TP304/304L, B36.19M, BE,,
NIP			1/2" - 1-1/2" -	S-40S	PNNIPBA6S2F0	738	Nipple, pipe, smls, SS, A312 TP304/304L, A733/B36.19M, 6" long, BBE,
NIP			1/2" - 1-1/2" -	S-40S	PNNIPBA3S2F0	1	Nipple, pipe, smls, SS, A312 TP304/304L, A733/B36.19M, 3" long, BBE,
NIP			1/2" - 1-1/2" -	S-80S	PNNIPBL3S2F0	705	Nipple, pipe, smls, SS, A312 TP304/304L, A733/B36.19M, 3" long, BOE/TOE,
CAPOT			1/2" - 1-1/2"	CL 3000	PSCAPDTKS2M0	1	Cap, thd, A182 F304/304L, B16.11, CL 3000,
CAPBV			1/2" - 12"		PWCAPAAS3100	1	Cap, B16.9, BE, A403 WP304/304L-S,
E45LR			1/2" - 12"		PWE4LAAS3100	1	45 LR elbow, B16.9, BE, A403 WP304/304L-S,
E90LR			1/2" - 12"		PWE9LAAS3100	1	90 LR elbow, B16.9, BE, A403 WP304/304L-S,
TEE			1/2" - 12"		PWTEEAAS3100	1	Tee, B16.9, BE, A403 WP304/304L-S,
:EDC			3/4" - 12" 1/2" - 10"		PWRECA1S3100	1	Conc red, B16.9, BE x BE, A403 WP304/304L-S,
REDE			3/4" - 12" 1/2" - 10"		PWREEA1S3100	1	Ecc red, B16.9, BE x BE, A403 WP304/304L-S,
TRB			3/4" - 12" 1/2" - 10"		PWTRBA1S3100	1	Tee red, B16.9, BE x BE, A403 WP304/304L-S,
FWN	02, 05		1/2" - 12"	CL 150	PFWNAAAS2M00	1	Flg, WN, A182 F304/304L, B16.5, CL 150, RFFE,
FWN	02, 05, 11		1/2" - 12"	CL 300	PFWNAABS2M00	773	Flg, WN, A182 F304/304L, B16.5, CL 300, RFFE,
FBLD	02		1/2" - 12"	CL 150	PFBLAAAS2M00	1	Flg, blind, A182 F304/304L, B16.5, CL 150, RFFE,
FBLD	02, 11		1/2" - 12"	CL 300	PFBLAABS2M00	773	Flg, blind, A182 F304/304L, B16.5, CL 300, RFFE,
LOL			2" - 12" 1/2" - 6"		PWLOLKWS2MDC	1	Latrolet, Mfg. Std., BE x BE, A182 F304/304L, In acc. w/project design code
WOL			2" - 12" 1/2" - 6"		PWWOLKWS2M00	1	Weldolet, MSS-SP-97, BE x BE, A182 F304/304L,
BALF	02		1/2" - 6"	CL 150	VBABABS1FLSECJBP	1	Valve, Ball, CL 150, BE, A351 CF3, lever, Reg port, S-40S Bore TAG NUMBER: VB1I011
BALF	02, 05		3" - 3"	CL 150	VBAAAAS1FLGLCJAA	10016	Valve, Ball, CL 150, RFFE, A351 CF3, lever, Reg port- TAG NUMBER: VB1I013
BALF	02		8" - 10"	CL 150	VBABABS1FGSECJBP	1	Valve, Ball, CL 150, BE, A351 CF3, GO w/side HW, Reg port, S-40S Bore TAG NUMBER: VB1I021
CKL	02		1/2" - 1-1/2"	CL 800	VCLBHBS2MBTCEUFM	1	Valve, Check, CL 800, BE, A182 F304/304L, Trim 12, Conv. port , S-40S Bore TAG NUMBER: VC8I011
CKS	02		2" - 6"	CL 150	VCABABS1FCTDEUFN	1	Valve, Check, CL 150, BE, A351 CF3, Trim 12, Conv. port , S-40S Bore TAG NUMBER: VC1I011
GLO	02		1/2" - 1-1/2"	CL 800	VLABHBS2MASKEXFM	1	Valve, Globe, CL 800, BE, A182 F304/304L, Trim 12, HW, Reg port , S-40S Bore TAG NUMBER: VL8I011
GLO	02		2" - 10"	CL 150	VLABABS1FASKEXFN	1	Valve, Globe, CL 150, BE, A351 CF3, Trim 12, HW, Reg port , S-40S Bore TAG NUMBER: VL1I011
INSTROOT	02, 13		1/2" - 1-1/2"	CL 800	VLABHBS2MASKEXFM	1	Valve, Globe, CL 800, BE, A182 F304/304L, Trim 12, HW, Reg port , S-40S Bore TAG NUMBER: VL8I011
VENT/DRAIN	02, 21		3/4" - 1-1/2"	CL 150	VBABABS1FLSECJBP	1	Valve, Ball, CL 150, BE, A351 CF3, lever, Reg port, S-40S Bore TAG NUMBER: VB1I011
iASO-1			1/2" - 12"	CL 150	PGFRAAAPCAGH	1	Gasket, flat ring, RFFE, Microcellular PTFE, B16.5, 1/16" thick, CL 150, ASME B16.21, Garlock Gylon 3545 or equal

ITEM	Notes	Rev	NPS1 / NPS2	Sch / Rat	Commodity Code	Opt	Description
GASO-2			1/2" - 12"	CL 300	PGFRAAAPCBGH	1	Gasket, flat ring, RFFE, Microcellular PTFE, B16.5, 1/16" thick, CL 300, ASME B16.21, Garlock Gylon 3545 or equal
BLTG			1/2" - 12"		PTS2101B8T00	1	Stud bolt w/2 nuts, A193 Gr. B8M CL2 w/ A194 Gr. 8MA nuts, B18.2.1/B18.2.2.

0° Degree BRANCH CONNECTION
Legend and chart

BRANCH	12	10	8	6	4	3	2	1.5	1	.75	.5
12	TEE										
10	TRB	TEE									
8	TRB	TRB	TEE								
6	WOL	TRB	TRB	TEE							
4	WOL	WOL	TRB	TRB	TEE						
3	WOL	WOL	WOL	TRB	TRB	TEE					
2	WOL	WOL	WOL	WOL	WOL	TRB	TEE				
1.5	WOL	WOL	WOL	WOL	WOL	WOL	TRB	TEE			
1	WOL	WOL	WOL	WOL	WOL	WOL	TRB	TRB	TEE		
.75	WOL	WOL	WOL	WOL	WOL	WOL	TRB	TRB	TRB	TEE	
.5	WOL	WOL	WOL	WOL	WOL	WOL	WOL	TRB	TRB	TRB	TEE

HEADER

TRB	Tee red
TEE	Tee
WOL	Weldolet

SPECIFICATION NOTES:

02	Valves and flanges per this pipe class shall not be used behind shielding.
05	Use only for instrumentation and equipment connections.
11	Use only when necessary to connect to similar connections.
13	Use as block valve for instrumentation connections.
21	Use as block valve for vent and drain connections.

GENERAL NOTES:

305	Minimum pipe size shall be NPS 3/4, except for individual instrument leads, pump & compressor auxiliary piping and for reduction at instruments or other equipment normally provided with smaller than NPS 3/4 connections.

Commodity Code Valve Summary

Revised Date: 19-APR-17

Commodity Code

VBABABS1FLSECJBP

Valve, Ball, CL 150, BE, A351 CF3, lever, Reg port, S-40S Bore TAG NUMBER: VB1I011

Valve, Ball, Beveled Ends, Long Pattern, Class 150, Beveled end,ASTM A351 CF3, Floating ball, Top entry, Regular port, S-40S Bore, Antistatic design, Lever operator, 304SS, 304SS, PTFE, PTFE, Manufacturers standard, Full ASME rating @ -20F (-29C) to 250F (121C), ASME B16.34 ASME B16.34 ASME B16.25 Manufacturers standard API 598

TYPE	: Ball, Beveled Ends, Long Pattern
RATING	: Class 150
PRESS/TEMP LIMITS	: Full ASME rating @ -20F (-29C) to 250F (121C)
ENDS	: Beveled end
SCHEDULE	: S-40S Bore
BODY	: ASTM A351 CF3
OPERATOR	: Lever operator
PORT	: Regular port
CONFIGURATION	: Floating ball-Top entry
BALL MATL	: 304SS
SEAT	: PTFE
STEM	: 304SS
SEAL	: PTFE
BOLTING	: Manufacturers standard
OPTIONS	: Antistatic design
STANDARDS:	: Conforming to
DESIGN STD.	: ASME B16.34
END STD.	: ASME B16.25
RATING STD.	: ASME B16.34
TESTING STD.	: API 598
DIMENSIONAL STD.	: Manufacturers standard

*

TAG NUMBER: VB1I011

Commodity Code Valve Summary

Revised Date: 19-APR-17

Commodity Code	
VBAAAAS1FLGLCJAA	Valve, Ball, CL 150, RFFE, A351 CF3, lever, Reg port- TAG NUMBER: VB1I013

Valve, Ball, Flanged, Long Pattern, Class 150, Raised face flanged end,ASTM A351 CF3, Floating ball, Two-piece, Regular port, -, Antistatic design, Lever operator, 304SS, 304SS, PTFE, PTFE, Manufacturers standard, Full ASME rating @ -20F (-29C) to 250F (121C), ASME B16.34, ASME B16.34, ASME B16.5, ASME B16.10, API 598

TYPE	: Ball, Flanged, Long Pattern
RATING	: Class 150
PRESS/TEMP LIMITS	: Full ASME rating @ -20F (-29C) to 250F (121C)
ENDS	: Raised face flanged end
SCHEDULE	: -
BODY	: ASTM A351 CF3
OPERATOR	: Lever operator
PORT	: Regular port
CONFIGURATION	: Floating ball-Two-piece
BALL MATL	: 304SS
SEAT	: PTFE
STEM	: 304SS
SEAL	: PTFE
BOLTING	: Manufacturers standard
OPTIONS	: Antistatic design
STANDARDS:	: Conforming to
DESIGN STD.	: ASME B16.34
END STD.	: ASME B16.5
RATING STD.	: ASME B16.34
TESTING STD.	: API 598
DIMENSIONAL STD.	: ASME B16.10

*

TAG NUMBER: VB1I013

Commodity Code Valve Summary

Revised Date: 19-APR-17

Commodity Code

VBABABS1FGSECJBP

Valve, Ball, CL 150, BE, A351 CF3, GO w/side HW, Reg port, S-40S Bore TAG NUMBER: VB1I021

Valve, Ball, Beveled Ends, Long Pattern, Class 150, Beveled end,ASTM A351 CF3, Floating ball, Top entry, Regular port, S-40S Bore, Antistatic design, Gear operator with side handwheel, 304SS, 304SS, PTFE, PTFE, Manufacturers standard, Full ASME rating @ -20F (-29C) to 250F (121C), ASME B16.34 ASME B16.34 ASME B16.25 Manufacturers standard API 598

TYPE	: Ball, Beveled Ends, Long Pattern
RATING	: Class 150
PRESS/TEMP LIMITS	: Full ASME rating @ -20F (-29C) to 250F (121C)
ENDS	: Beveled end
SCHEDULE	: S-40S Bore
BODY	: ASTM A351 CF3
OPERATOR	: Gear operator with side handwheel
PORT	: Regular port
CONFIGURATION	: Floating ball-Top entry
BALL MATL	: 304SS
SEAT	: PTFE
STEM	: 304SS
SEAL	: PTFE
BOLTING	: Manufacturers standard
OPTIONS	: Antistatic design
STANDARDS:	: Conforming to
DESIGN STD.	: ASME B16.34
END STD.	: ASME B16.25
RATING STD.	: ASME B16.34
TESTING STD.	: API 598
DIMENSIONAL STD.	: Manufacturers standard

*

TAG NUMBER: VB1I021

Commodity Code Valve Summary

Revised Date: 02-DEC-15

Commodity Code	
VCLBHBS2MBTCEUFM	Valve, Check, CL 800, BE, A182 F304/304L, Trim 12, Conv. port , S-40S Bore TAG NUMBER: VC8I011

Valve, Check, Lift, Beveled End, Long Pattern, Class 800, Beveled end, ASTM A182 F304/304L, Piston lift, Conventional port, API trim 12, S-40S Bore, with spring, -, Bolted cover, -, Manufacturers standard, PTFE or RTFE, - - -,horizontal with cover up or vertical upward flow, API 602, API 602, ASME B16.25, Manufacturers standard, API 598

TYPE	: Check, Lift, Beveled End, Long Pattern
DESIGN	: Piston lift
RATING	: Class 800
ENDS	: Beveled end
SCHEDULE	: S-40S Bore
BODY / COVER MATL	: ASTM A182 F304/304L / -
COVER	: Bolted cover
API TRIM	: API trim 12
INSTALLATION	: horizontal with cover up or vertical upward flow
PORT	: Conventional port
DISC / SEAT	: - / -
GASKET	: PTFE or RTFE
BOLTING	: Manufacturers standard
HINGE PIN	: -
SPRINGS	: -
OPTIONS	: with spring
STANDARDS:	: Conforming to
DESIGN STD.	: API 602
END STD.	: ASME B16.25
RATING STD.	: API 602
TESTING STD.	: API 598
DIMENSIONAL STD.	: Manufacturers standard

* TAG NUMBER: VC8I011

Commodity Code Valve Summary

Revised Date: 02-DEC-15

Commodity Code

VCABABS1FCTDEUFN

Valve, Check, CL 150, BE, A351 CF3, Trim 12, Conv. port , S-40S Bore TAG NUMBER: VC1I011

Valve, Check, Swing, Beveled End, Long Pattern, Class 150, Beveled end, ASTM A351 CF3, Conventional port, API trim 12, S-40S Bore, - -, Bolted cover, -, Manufacturers standard, PTFE or RTFE, - - -,horizontal or vertical with upward flow, B16.34 and API 600 (as applicable), ASME B16.34, ASME B16.25, ASME B16.10, API 598

TYPE	: Check, Swing, Beveled End, Long Pattern
DESIGN	:
RATING	: Class 150
ENDS	: Beveled end
SCHEDULE	: S-40S Bore
BODY / COVER MATL	: ASTM A351 CF3 / -
COVER	: Bolted cover
API TRIM	: API trim 12
INSTALLATION	: horizontal or vertical with upward flow
PORT	: Conventional port
DISC / SEAT	: - / -
GASKET	: PTFE or RTFE
BOLTING	: Manufacturers standard
HINGE PIN	: -
SPRINGS	: -
OPTIONS	: -
STANDARDS:	: Conforming to
DESIGN STD.	: B16.34 and API 600 (as applicable)
END STD.	: ASME B16.25
RATING STD.	: ASME B16.34
TESTING STD.	: API 598
DIMENSIONAL STD.	: ASME B16.10

* TAG NUMBER: VC1I011

Commodity Code Valve Summary

Revised Date: 02-DEC-15

Commodity Code

VLABHBS2MASKEXFM

Valve, Globe, CL 800, BE, A182 F304/304L, Trim 12, HW, Reg port , S-40S Bore TAG NUMBER: VL8I011

Valve, Globe, Beveled End, Long Pattern, Class 800, Beveled end, ASTM A182 F304/304L, T-Body, Regular port, API trim 12, S-40S Bore, -, Disc Type, -, Handwheel operator, Bolted bonnet, -, Manufacturers standard, PTFE or RTFE, Outside Screw & Yoke, -, PTFE -, API 602, API 602, ASME B16.25, Manufacturers standard, API 598

TYPE	: Globe, Beveled End, Long Pattern
RATING	: Class 800
ENDS	: Beveled end
SCHEDULE	: S-40S Bore
BODY / BONNET MATL	: ASTM A182 F304/304L / -
CLOSURE	: Disc Type
DISC / PLUG MATL	: -
API TRIM	: API trim 12
OPERATOR	: Handwheel operator
PORT	: Regular port
CONFIGURATION	: Outside Screw & Yoke
BONNET TYPE	: Bolted bonnet
SEAT	: -
STEM	: -
STEM PACKING	: PTFE
BONNET BOLTING	: Manufacturers standard
BONNET GASKET	: PTFE or RTFE
OPTIONS	: -
STANDARDS:	: Conforming to
DESIGN STD.	: API 602
END STD.	: ASME B16.25
RATING STD.	: API 602
TESTING STD.	: API 598
DIMENSIONAL STD.	: Manufacturers standard

* TAG NUMBER: VL8I011

Commodity Code Valve Summary

Revised Date: 02-DEC-15

Commodity Code

VLABABS1FASKEXFN

Valve, Globe, CL 150, BE, A351 CF3, Trim 12, HW, Reg port , S-40S Bore TAG NUMBER: VL1I011

Valve, Globe, Beveled End, Long Pattern, Class 150, Beveled end, ASTM A351 CF3, T-Body, Regular port, API trim 12, S-40S Bore, -, Disc Type, -, Handwheel operator, Bolted bonnet, -, Manufacturers standard, PTFE or RTFE, Outside Screw & Yoke, -, PTFE -, B16.34 and API 600 (as applicable), ASME B16.34, ASME B16.25, ASME B16.10, API 598

TYPE	: Globe, Beveled End, Long Pattern
RATING	: Class 150
ENDS	: Beveled end
SCHEDULE	: S-40S Bore
BODY / BONNET MATL	: ASTM A351 CF3 / -
CLOSURE	: Disc Type
DISC / PLUG MATL	: -
API TRIM	: API trim 12
OPERATOR	: Handwheel operator
PORT	: Regular port
CONFIGURATION	: Outside Screw & Yoke
BONNET TYPE	: Bolted bonnet
SEAT	: -
STEM	: -
STEM PACKING	: PTFE
BONNET BOLTING	: Manufacturers standard
BONNET GASKET	: PTFE or RTFE
OPTIONS	: -
STANDARDS:	: Conforming to
DESIGN STD.	: B16.34 and API 600 (as applicable)
END STD.	: ASME B16.25
RATING STD.	: ASME B16.34
TESTING STD.	: API 598
DIMENSIONAL STD.	: ASME B16.10

* TAG NUMBER: VL1I011

Commodity Code Valve Summary

Revised Date: 02-DEC-15

Commodity Code

VLABHBS2MASKEXFM

Valve, Globe, CL 800, BE, A182 F304/304L, Trim 12, HW, Reg port , S-40S Bore TAG NUMBER: VL8I011

Valve, Globe, Beveled End, Long Pattern, Class 800, Beveled end, ASTM A182 F304/304L, T-Body, Regular port, API trim 12, S-40S Bore, -, Disc Type, -, Handwheel operator, Bolted bonnet, -, Manufacturers standard, PTFE or RTFE, Outside Screw & Yoke, -, PTFE -, API 602, API 602, ASME B16.25, Manufacturers standard, API 598

TYPE	: Globe, Beveled End, Long Pattern
RATING	: Class 800
ENDS	: Beveled end
SCHEDULE	: S-40S Bore
BODY / BONNET MATL	: ASTM A182 F304/304L / -
CLOSURE	: Disc Type
DISC / PLUG MATL	: -
API TRIM	: API trim 12
OPERATOR	: Handwheel operator
PORT	: Regular port
CONFIGURATION	: Outside Screw & Yoke
BONNET TYPE	: Bolted bonnet
SEAT	: -
STEM	: -
STEM PACKING	: PTFE
BONNET BOLTING	: Manufacturers standard
BONNET GASKET	: PTFE or RTFE
OPTIONS	: -
STANDARDS:	: Conforming to
DESIGN STD.	: API 602
END STD.	: ASME B16.25
RATING STD.	: API 602
TESTING STD.	: API 598
DIMENSIONAL STD.	: Manufacturers standard

* TAG NUMBER: VL8I011

Commodity Code Valve Summary

Revised Date: 19-APR-17

Commodity Code

VBABABS1FLSECJBP

Valve, Ball, CL 150, BE, A351 CF3, lever, Reg port, S-40S Bore TAG NUMBER: VB1I011

Valve, Ball, Beveled Ends, Long Pattern, Class 150, Beveled end,ASTM A351 CF3, Floating ball, Top entry, Regular port, S-40S Bore, Antistatic design, Lever operator, 304SS, 304SS, PTFE, PTFE, Manufacturers standard, Full ASME rating @ -20F (-29C) to 250F (121C), ASME B16.34 ASME B16.34 ASME B16.25 Manufacturers standard API 598

TYPE	: Ball, Beveled Ends, Long Pattern
RATING	: Class 150
PRESS/TEMP LIMITS	: Full ASME rating @ -20F (-29C) to 250F (121C)
ENDS	: Beveled end
SCHEDULE	: S-40S Bore
BODY	: ASTM A351 CF3
OPERATOR	: Lever operator
PORT	: Regular port
CONFIGURATION	: Floating ball-Top entry
BALL MATL	: 304SS
SEAT	: PTFE
STEM	: 304SS
SEAL	: PTFE
BOLTING	: Manufacturers standard
OPTIONS	: Antistatic design
STANDARDS:	: Conforming to
DESIGN STD.	: ASME B16.34
END STD.	: ASME B16.25
RATING STD.	: ASME B16.34
TESTING STD.	: API 598
DIMENSIONAL STD.	: Manufacturers standard

*

TAG NUMBER: VB1I011

Material Specification P5

CL300, 316/316L SS - SL, SN, CH, DR, TPW, COND, AIR, SR, FR

Prepared For: WRPS

Project: 31269 - Low Activity Waste Pretreatment System (LAWPS)

AECOM ATKINS AREVA

CORROSION ALLOWANCE	0.063in	DESIGN CODE	ASME B31.3
EXAMINATION	Per ASME B31.3	MATERIAL	316/316L Dual Marked
RATING CLASS	CL300, ASME B16.5	STRESS RELIEF	Not Req'd
TEMPERATURE LIMIT	-20F to 170F		

PRESSURE - TEMPERATURE RATINGS

Temp F	-20	100	170
Temp C	-29	38	77

psig	400	400	400
kPag	2760	2760	2760

SPECIFICATION NOTES:
08, 21, 12, 03, 43, 06

NOTE: Shaded rows are items that have been changed or added since last revision

ITEM	Notes	Rev	NPS1 / NPS2	Sch / Rat	Commodity Code	Opt	Description
PIPE			1/2" - 12"	S-40S	PPSAB0S2NB00	1	Pipe, smls, SS, A312 TP316/316L, B36.19M, BE,,
PIPE	43		8" - 8"	S-80S	PPSAB0S2NB00	10080	Pipe, smls, SS, A312 TP316/316L, B36.19M, BE,,
NIP			1/2" - 3"	S-40S	PNNIPBA3S2N0	1	Nipple, pipe, smls, SS, A312 TP316/316L, A733/B36.19M, 3" long, BBE,
NIP			1/2" - 3"	S-40S	PNNIPBA6S2N0	738	Nipple, pipe, smls, SS, A312 TP316/316L, A733/B36.19M, 6" long, BBE,
CAPBV			1/2" - 12"		PWCAPAAS3N00	1	Cap, B16.9, BE, A403 WP316/316L-S,
CAPBV	43		8" - 8"		PWCAPAAS3N00	10073	Cap, B16.9, BE, A403 WP316/316L-S,
E45LR			1/2" - 12"		PWE4LAAS3N00	1	45 LR elbow, B16.9, BE, A403 WP316/316L-S,
E45LR	43		8" - 8"		PWE4LAAS3N00	10073	45 LR elbow, B16.9, BE, A403 WP316/316L-S,
E90LR			1/2" - 12"		PWE9LAAS3N00	1	90 LR elbow, B16.9, BE, A403 WP316/316L-S,
E90LR	43		8" - 8"		PWE9LAAS3N00	10073	90 LR elbow, B16.9, BE, A403 WP316/316L-S,
E90SR			1" - 12"		PWE9SAAS3N00	1	90 SR elbow, B16.9, BE, A403 WP316/316L-S,
TEE			1/2" - 12"		PWTEEAAS3N00	1	Tee, B16.9, BE, A403 WP316/316L-S,
TEE	43		8" - 8"		PWTEEAAS3N00	10073	Tee, B16.9, BE, A403 WP316/316L-S,
REDC			3/4" - 12" 1/2" - 10"		PWRECA1S3N00	1	Conc red, B16.9, BE x BE, A403 WP316/316L-S,
REDC	43		8" - 8" 4" - 6"		PWRECA1S3N00	10073	Conc red, B16.9, BE x BE, A403 WP316/316L-S,
REDE			3/4" - 12" 1/2" - 10"		PWREEA1S3N00	1	Ecc red, B16.9, BE x BE, A403 WP316/316L-S,
REDE	43		8" - 8" 4" - 6"		PWREEA1S3N00	10080	Ecc red, B16.9, BE x BE, A403 WP316/316L-S,
TRB			3/4" - 12" 1/2" - 10"		PWTRBA1S3N00	1	Tee red, B16.9, BE x BE, A403 WP316/316L-S,
TRB	43		8" - 8" 4" - 6"		PWTRBA1S3N00	10073	Tee red, B16.9, BE x BE, A403 WP316/316L-S,
FWN	12		1/2" - 12"	CL 300	PFWNAABS2N00	1	Flg, WN, A182 F316/316L, B16.5, CL 300, RFFE,
FWN	12, 43		8" - 8"	CL 300	PFWNAABS2N00	10073	Flg, WN, A182 F316/316L, B16.5, CL 300, RFFE,
LOL			3" - 12" 1/2" - 6"		PWLOLKWS2NDC	1	Latrolet, Mfg. Std., BE x BE, A182 F316/316L, In acc. w/project design code
LOL	43		8" - 8" 1-1/2" - 4"		PWLOLKWS2NDC	10073	Latrolet, Mfg. Std., BE x BE, A182 F316/316L, In acc. w/project design code
WOL			3" - 12" 1/2" - 6"		PWWOLKWS2N00	1	Weldolet, MSS-SP-97, BE x BE, A182 F316/316L,
WOL	43		8" - 8" 1/2" - 3"		PWWOLKWS2N00	10073	Weldolet, MSS-SP-97, BE x BE, A182 F316/316L,
CKS	03		1/2" - 2"	CL 800	VCABHBS2NCTDC4FM	1	Valve, Check, CL 800, BE, A182 F316/316L, Trim 12, Conv. port , S-40S Bore TAG NUMBER: VC8I021
PLU	03		1/2" - 2"	CL 300	VPBBBBS1VLATAHPB	1	Valve, Plug, CL 300, BE, A351 CF3M/CF8M, , lever, Reg port , S-40S Bore TAG NUMBER: VP3I011
PLU	06		3/4" - 2"	CL 300	VPZABBS2NLZA0000	2285	Valve, Plug, CL 300, BE, A182 F316/316L, lever, Reg port, S-40S Bore, Remotely Maintainable per mechanical specification 15-2-022
PLU	06, 08		3/4" - 2"	CL 300	VPZABBS2NLZB0000	10088	Valve, Plug, CL 300, BE, A182 F316/316L, lever, Full port, S-4 Bore, Remotely Maintainable per mechanical specification 15-2

ITEM	Notes	Rev	NPS1 / NPS2	Sch / Rat	Commodity Code	Opt	Description
PLU							022
PLU	03, 08		3/4" - 2"	CL 300	VPBBBBS2NLAUAHPB	24	Valve, Plug, CL 300, BE, A182 F316/316L, , lever, Full port , S-40S Bore TAG NUMBER: VP3I021
PLU	06		3" - 6"	CL 300	VPZABBS2NGZA0000	2285	Valve, Plug, CL 300, BE, A182 F316/316L, GO w/side HW, Reg port, S-40S Bore, Remotely Maintainable per mechanical specification 15-2-022
PLU	06, 08		3" - 6"	CL 300	VPZABBS2NGZB0000	10088	Valve, Plug, CL 300, BE, A182 F316/316L, GO w/side HW, Full port, S-40S Bore, Remotely Maintainable per mechanical specification 15-2-022
PLU	03, 08		3" - 6"	CL 300	VPBBBBS2NGAUAHPB	24	Valve, Plug, CL 300, BE, A182 F316/316L, , GO w/side HW, Full port , S-40S Bore TAG NUMBER: VP3I041
PLU	03		3" - 12"	CL 300	VPBBBBS1VGATAHPB	1	Valve, Plug, CL 300, BE, A351 CF3M/CF8M, , GO w/side HW, Reg port , S-40S Bore TAG NUMBER: VP3I031
PLUG3W	06		1" - 2"	CL 300	VPZBBBS2NLZC0000	1	Valve, Plug, CL 300, BE, A182 F316/316L, lever, Reg port, S-40S Bore, Remotely Maintainable per mech. spec. 15-2-022, 3-Way
VENT/DRAIN	03, 21		1/2" - 2"	CL 300	VPBBBBS1VLATAHPB	1	Valve, Plug, CL 300, BE, A351 CF3M/CF8M, , lever, Reg port , S-40S Bore TAG NUMBER: VP3I011
GASINS			1/2" - 12"	CL 300	PGFKAA0ENBID	1	Gasket, insul kit, RFFE, 316SS retainer w/ EPDM seal, B16.5,, CL 300, two SS washers for each bolt, without insulation sleeve or washers, 300F max temp, GPT Linebacker
BLTG			1/2" - 12"		PTS2101B8T00	1	Stud bolt w/2 nuts, A193 Gr. B8M CL2 w/ A194 Gr. 8MA nuts, B18.2.1/B18.2.2.

90° Degree BRANCH CONNECTION
Legend and chart

BRANCH											
12	TEE										
10	TRB	TEE									
8	TRB	TRB	TEE								
6	WOL	TRB	TRB	TEE							
4	WOL	WOL	TRB	TRB	TEE						
3	WOL	WOL	WOL	TRB	TRB	TEE					
2	WOL	WOL	WOL	WOL	WOL	TRB	TEE				
1.5	WOL	WOL	WOL	WOL	WOL	WOL	TRB	TEE			
1	WOL	WOL	WOL	WOL	WOL	WOL	TRB	TRB	TEE		
.75	WOL	WOL	WOL	WOL	WOL	WOL	TRB	TRB	TRB	TEE	
.5	WOL	WOL	WOL	WOL	WOL	WOL	TRB	TRB	TRB	TRB	TEE
	12	10	8	6	4	3	2	1.5	1	.75	.5

HEADER

TEE	Tee
TRB	Tee red
WOL	Weldolet

SPECIFICATION NOTES:

03	Valves shall not be used behind shielding.
06	Use remotely maintainable valves only when necessary per the P&IDs.
08	Full port plug valves shall be used for slurry and resin applications, as indicated on the P&IDs.
12	Flanges per this pipe class shall be used in lines allowing for hands-on maintenance only and limited to locations identified on piping drawings.
21	Use as block valve for vent and drain connections.
43	Schedule 80S components to be used for the CFF solids recirculation loop.

GENERAL NOTES:

G06	Schedule 80S pipe/fittings to be used for waste streams with high solids content to provide additional erosion allowance. The waste streams with high solids content include the 8" CFF recirculation piping.

Commodity Code Valve Summary

Revised Date: 06-JAN-16

Commodity Code

VCABHBS2NCTDC4FM

Valve, Check, CL 800, BE, A182 F316/316L, Trim 12, Conv. port , S-40S Bore TAG NUMBER: VC8I021

Valve, Check, Swing, Beveled End, Long Pattern, Class 800, Beveled end, ASTM A182 F316/316L, Conventional port, API trim 12, S-40S Bore, - -, Welded cover,horizontal or vertical with upward flow, API 602, API 602, ASME B16.25, Manufacturers standard, API 598

TYPE	: Check, Swing, Beveled End, Long Pattern
DESIGN	:
RATING	: Class 800
ENDS	: Beveled end
SCHEDULE	: S-40S Bore
BODY / COVER MATL	: ASTM A182 F316/316L / -
COVER	: Welded cover
API TRIM	: API trim 12
INSTALLATION	: horizontal or vertical with upward flow
PORT	: Conventional port
DISC / SEAT	: - / -
GASKET	: -
BOLTING	: -
HINGE PIN	: -
SPRINGS	: -
OPTIONS	: -
STANDARDS:	: Conforming to
DESIGN STD.	: API 602
END STD.	: ASME B16.25
RATING STD.	: API 602
TESTING STD.	: API 598
DIMENSIONAL STD.	: Manufacturers standard

* TAG NUMBER: VC8I021

Commodity Code Valve Summary

Revised Date: 28-SEP-15

Commodity Code

VPBBBBS1VLATAHPB

Valve, Plug, CL 300, BE, A351 CF3M/CF8M, , lever, Reg port , S-40S Bore TAG NUMBER: VP3I011

Valve, Plug, Beveled End Short Pattern, Class 300, Beveled end, ASTM A351 CF3M/CF8M, Top Entry, Regular port, S-40S Bore, Non lubricated, Tapered, UHMWPE Sleeve, 316SS, Lever operator, Integral with plug, UHMWPE Sleeve, UHMWPE, Manufacturers standard, -, API 599 or ASME B16.34, ASME B16.34, ASME B16.25, Manufacturers standard, API 598

TYPE	: Plug, Beveled End Short Pattern
RATING	: Class 300
ENDS	: Beveled end
SCHEDULE	: S-40S Bore
BODY MATL	: ASTM A351 CF3M/CF8M
PLUG DESIGN	: Tapered, UHMWPE Sleeve
PLUG TYPE	: Top Entry
PLUG MATERIAL	: 316SS
API TRIM	:
OPERATOR	: Lever operator
PORT	: Regular port
SEAT	: UHMWPE Sleeve
STEM	: Integral with plug
STEM PACKING	: UHMWPE
BONNET BOLTING	: Manufacturers standard
BONNET GASKET	: -
OPTIONS	: Non lubricated
STANDARDS:	: Conforming to
DESIGN STD.	: API 599 or ASME B16.34
END STD.	: ASME B16.25
RATING STD.	: ASME B16.34
TESTING STD.	: API 598
DIMENSIONAL STD.	: Manufacturers standard

* TAG NUMBER: VP3I011

Commodity Code Valve Summary

Revised Date: 19-APR-17

Commodity Code

VPZABBS2NLZA0000

Valve, Plug, CL 300, BE, A182 F316/316L, lever, Reg port, S-40S Bore, Remotely Maintainable per mechanical specification 15-2-022
TAG NUMBER:

Valve, Plug, Beveled End, Class 300, Beveled end, ASTM A182 F316/316L, Regular port S-40S Bore Remotely Maintainable per mechanical specification 15-2-022, Lever operator, -, -

TYPE	: Plug, Beveled End
RATING	: Class 300
ENDS	: Beveled end
SCHEDULE	: S-40S Bore
BODY MATL	: ASTM A182 F316/316L
PLUG DESIGN	:
PLUG TYPE	:
PLUG MATERIAL	:
API TRIM	:
OPERATOR	: Lever operator
PORT	: Regular port
SEAT	:
STEM	:
STEM PACKING	:
BONNET BOLTING	:
BONNET GASKET	:
OPTIONS	: Remotely Maintainable per mechanical specification 15-2-022
STANDARDS:	: Conforming to
DESIGN STD.	:
END STD.	:
RATING STD.	:
TESTING STD.	:
DIMENSIONAL STD.	:

* TAG NUMBER:

Commodity Code Valve Summary

Revised Date: 19-APR-17

Commodity Code

VPZABBS2NLZB0000

Valve, Plug, CL 300, BE, A182 F316/316L, lever, Full port, S-40S Bore, Remotely Maintainable per mechanical specification 15-2-022
TAG NUMBER:

Valve, Plug, Beveled End, Class 300, Beveled end, ASTM A182 F316/316L, Full port S-40S Bore Remotely Maintainable per mechanical specification 15-2-022, Lever operator, -, -

TYPE	: Plug, Beveled End
RATING	: Class 300
ENDS	: Beveled end
SCHEDULE	: S-40S Bore
BODY MATL	: ASTM A182 F316/316L
PLUG DESIGN	:
PLUG TYPE	:
PLUG MATERIAL	:
API TRIM	:
OPERATOR	: Lever operator
PORT	: Full port
SEAT	:
STEM	:
STEM PACKING	:
BONNET BOLTING	:
BONNET GASKET	:
OPTIONS	: Remotely Maintainable per mechanical specification 15-2-022
STANDARDS:	: Conforming to
DESIGN STD.	:
END STD.	:
RATING STD.	:
TESTING STD.	:
DIMENSIONAL STD.	:

* TAG NUMBER:

Commodity Code Valve Summary

Revised Date: 29-SEP-15

Commodity Code

VPBBBBS2NLAUAHPB

Valve, Plug, CL 300, BE, A182 F316/316L, , lever, Full port , S-40S Bore TAG NUMBER: VP3I021

Valve, Plug, Beveled End Short Pattern, Class 300, Beveled end, ASTM A182 F316/316L, Top Entry, Full port, S-40S Bore, Non lubricated, single module replacement of entire inner compopnents (plug, sleeve unit, gland and cover parts), Tapered, UHMWPE Sleeve, 316SS, Lever operator, Integral with plug, UHMWPE Sleeve, UHMWPE, Manufacturers standard, -, API 599 or ASME B16.34, ASME B16.34, ASME B16.25, Manufacturers standard, API 598

TYPE	: Plug, Beveled End Short Pattern
RATING	: Class 300
ENDS	: Beveled end
SCHEDULE	: S-40S Bore
BODY MATL	: ASTM A182 F316/316L
PLUG DESIGN	: Tapered, UHMWPE Sleeve
PLUG TYPE	: Top Entry
PLUG MATERIAL	: 316SS
API TRIM	:
OPERATOR	: Lever operator
PORT	: Full port
SEAT	: UHMWPE Sleeve
STEM	: Integral with plug
STEM PACKING	: UHMWPE
BONNET BOLTING	: Manufacturers standard
BONNET GASKET	: -
OPTIONS	: Non lubricated, single module replacement of entire inner compopnents (plug, sleeve unit, gland and cover parts)

STANDARDS:	: Conforming to
DESIGN STD.	: API 599 or ASME B16.34
END STD.	: ASME B16.25
RATING STD.	: ASME B16.34
TESTING STD.	: API 598
DIMENSIONAL STD.	: Manufacturers standard

* TAG NUMBER: VP3I021

Commodity Code Valve Summary

Revised Date: 19-APR-17

Commodity Code

VPZABBS2NGZA0000

Valve, Plug, CL 300, BE, A182 F316/316L, GO w/side HW, Reg port, S-40S Bore, Remotely Maintainable per mechanical specification 15-2-022 TAG NUMBER:

Valve, Plug, Beveled End, Class 300, Beveled end, ASTM A182 F316/316L, Regular port S-40S Bore Remotely Maintainable per mechanical specification 15-2-022, Gear operator with side handwheel, -, -

TYPE	: Plug, Beveled End
RATING	: Class 300
ENDS	: Beveled end
SCHEDULE	: S-40S Bore
BODY MATL	: ASTM A182 F316/316L
PLUG DESIGN	:
PLUG TYPE	:
PLUG MATERIAL	:
API TRIM	:
OPERATOR	: Gear operator with side handwheel
PORT	: Regular port
SEAT	:
STEM	:
STEM PACKING	:
BONNET BOLTING	:
BONNET GASKET	:
OPTIONS	: Remotely Maintainable per mechanical specification 15-2-022
STANDARDS:	: Conforming to
DESIGN STD.	:
END STD.	:
RATING STD.	:
TESTING STD.	:
DIMENSIONAL STD.	:

* TAG NUMBER:

Commodity Code Valve Summary

Revised Date: 19-APR-17

Commodity Code

VPZABBS2NGZB0000

Valve, Plug, CL 300, BE, A182 F316/316L, GO w/side HW, Full port, S-40S Bore, Remotely Maintainable per mechanical specification 15-2-022 TAG NUMBER:

Valve, Plug, Beveled End, Class 300, Beveled end, ASTM A182 F316/316L, Full port S-40S Bore Remotely Maintainable per mechanical specification 15-2-022, Gear operator with side handwheel, -, -

TYPE	: Plug, Beveled End
RATING	: Class 300
ENDS	: Beveled end
SCHEDULE	: S-40S Bore
BODY MATL	: ASTM A182 F316/316L
PLUG DESIGN	:
PLUG TYPE	:
PLUG MATERIAL	:
API TRIM	:
OPERATOR	: Gear operator with side handwheel
PORT	: Full port
SEAT	:
STEM	:
STEM PACKING	:
BONNET BOLTING	:
BONNET GASKET	:
OPTIONS	: Remotely Maintainable per mechanical specification 15-2-022
STANDARDS:	: Conforming to
DESIGN STD.	:
END STD.	:
RATING STD.	:
TESTING STD.	:
DIMENSIONAL STD.	:

* TAG NUMBER:

Commodity Code Valve Summary

Revised Date: 29-SEP-15

Commodity Code	
VPBBBBS2NGAUAHPB	Valve, Plug, CL 300, BE, A182 F316/316L, , GO w/side HW, Full port , S-40S Bore TAG NUMBER: VP3I041

Valve, Plug, Beveled End Short Pattern, Class 300, Beveled end, ASTM A182 F316/316L, Top Entry, Full port, S-40S Bore, Non lubricated, single module replacement of entire inner compopnents (plug, sleeve unit, gland and cover parts), Tapered, UHMWPE Sleeve, 316SS, Gear operator with side handwheel, Integral with plug, UHMWPE Sleeve, UHMWPE, Manufacturers standard, -, API 599 or ASME B16.34, ASME B16.34, ASME B16.25, Manufacturers standard, API 598

TYPE	: Plug, Beveled End Short Pattern
RATING	: Class 300
ENDS	: Beveled end
SCHEDULE	: S-40S Bore
BODY MATL	: ASTM A182 F316/316L
PLUG DESIGN	: Tapered, UHMWPE Sleeve
PLUG TYPE	: Top Entry
PLUG MATERIAL	: 316SS
API TRIM	:
OPERATOR	: Gear operator with side handwheel
PORT	: Full port
SEAT	: UHMWPE Sleeve
STEM	: Integral with plug
STEM PACKING	: UHMWPE
BONNET BOLTING	: Manufacturers standard
BONNET GASKET	: -
OPTIONS	: Non lubricated, single module replacement of entire inner compopnents (plug, sleeve unit, gland and cover parts)

STANDARDS:	: Conforming to
DESIGN STD.	: API 599 or ASME B16.34
END STD.	: ASME B16.25
RATING STD.	: ASME B16.34
TESTING STD.	: API 598
DIMENSIONAL STD.	: Manufacturers standard

* TAG NUMBER: VP3I041

Commodity Code Valve Summary

Revised Date: 29-SEP-15

Commodity Code	
VPBBBBS1VGATAHPB	Valve, Plug, CL 300, BE, A351 CF3M/CF8M, , GO w/side HW, Reg port , S-40S Bore TAG NUMBER: VP3I031

Valve, Plug, Beveled End Short Pattern, Class 300, Beveled end, ASTM A351 CF3M/CF8M, Top Entry, Regular port, S-40S Bore, Non lubricated, Tapered, UHMWPE Sleeve, 316SS, Gear operator with side handwheel, Integral with plug, UHMWPE Sleeve, UHMWPE, Manufacturers standard, -, API 599 or ASME B16.34, ASME B16.34, ASME B16.25, Manufacturers standard, API 598

TYPE	: Plug, Beveled End Short Pattern
RATING	: Class 300
ENDS	: Beveled end
SCHEDULE	: S-40S Bore
BODY MATL	: ASTM A351 CF3M/CF8M
PLUG DESIGN	: Tapered, UHMWPE Sleeve
PLUG TYPE	: Top Entry
PLUG MATERIAL	: 316SS
API TRIM	:
OPERATOR	: Gear operator with side handwheel
PORT	: Regular port
SEAT	: UHMWPE Sleeve
STEM	: Integral with plug
STEM PACKING	: UHMWPE
BONNET BOLTING	: Manufacturers standard
BONNET GASKET	: -
OPTIONS	: Non lubricated
STANDARDS:	: Conforming to
DESIGN STD.	: API 599 or ASME B16.34
END STD.	: ASME B16.25
RATING STD.	: ASME B16.34
TESTING STD.	: API 598
DIMENSIONAL STD.	: Manufacturers standard

* TAG NUMBER: VP3I031

Commodity Code Valve Summary

Revised Date: 19-APR-17

Commodity Code

VPZBBBS2NLZC0000

Valve, Plug, CL 300, BE, A182 F316/316L, lever, Reg port, S-40S Bore, Remotely Maintainable per mech. spec. 15-2-022, 3-Way TAG NUMBER:

Valve, Plug, 3-Way, Beveled End, Class 300, Beveled end, ASTM A182 F316/316L, Regular port S-40S Bore Remotely Maintainable per mechanical specification 15-2-022, 3-Way, Lever operator, -, -

TYPE	: Plug, 3-Way, Beveled End
RATING	: Class 300
ENDS	: Beveled end
SCHEDULE	: S-40S Bore
BODY MATL	: ASTM A182 F316/316L
PLUG DESIGN	:
PLUG TYPE	:
PLUG MATERIAL	:
API TRIM	:
OPERATOR	: Lever operator
PORT	: Regular port
SEAT	:
STEM	:
STEM PACKING	:
BONNET BOLTING	:
BONNET GASKET	:
OPTIONS	: Remotely Maintainable per mechanical specification 15-2-022, 3-Way
STANDARDS:	: Conforming to
DESIGN STD.	:
END STD.	:
RATING STD.	:
TESTING STD.	:
DIMENSIONAL STD.	:

* TAG NUMBER:

Commodity Code Valve Summary

Revised Date: 28-SEP-15

Commodity Code

VPBBBBS1VLATAHPB

Valve, Plug, CL 300, BE, A351 CF3M/CF8M, , lever, Reg port , S-40S Bore TAG NUMBER: VP3I011

Valve, Plug, Beveled End Short Pattern, Class 300, Beveled end, ASTM A351 CF3M/CF8M, Top Entry, Regular port, S-40S Bore, Non lubricated, Tapered, UHMWPE Sleeve, 316SS, Lever operator, Integral with plug, UHMWPE Sleeve, UHMWPE, Manufacturers standard, -, API 599 or ASME B16.34, ASME B16.34, ASME B16.25, Manufacturers standard, API 598

TYPE	: Plug, Beveled End Short Pattern
RATING	: Class 300
ENDS	: Beveled end
SCHEDULE	: S-40S Bore
BODY MATL	: ASTM A351 CF3M/CF8M
PLUG DESIGN	: Tapered, UHMWPE Sleeve
PLUG TYPE	: Top Entry
PLUG MATERIAL	: 316SS
API TRIM	:
OPERATOR	: Lever operator
PORT	: Regular port
SEAT	: UHMWPE Sleeve
STEM	: Integral with plug
STEM PACKING	: UHMWPE
BONNET BOLTING	: Manufacturers standard
BONNET GASKET	: -
OPTIONS	: Non lubricated
STANDARDS:	: Conforming to
DESIGN STD.	: API 599 or ASME B16.34
END STD.	: ASME B16.25
RATING STD.	: ASME B16.34
TESTING STD.	: API 598
DIMENSIONAL STD.	: Manufacturers standard

* TAG NUMBER: VP3I011

Material Specification P6

CL150, 304/304L SS - CA, IA, AIR, CHW, TPW, HW, COND, POT, FR, EXH, DR

Prepared For: WRPS

Project: 31269 - Low Activity Waste Pretreatment System (LAWPS)

AECOM ATKINS AREVA

CORROSION ALLOWANCE	0.063in	DESIGN CODE	ASME B31.3
EXAMINATION	Per ASME B31.3	MATERIAL	304/304L Dual Marked
RATING CLASS	CL150, ASME B16.5	STRESS RELIEF	Not Req'd
TEMPERATURE LIMIT	-20F to 200F		

PRESSURE - TEMPERATURE RATINGS

Temp F	-20	100	200
Temp C	-29	38	93

psig	275	275	230
kPag	1895	1895	1585

SPECIFICATION NOTES:
13, 17, 07, 11, 16, 29, 33, 15, 27

NOTE: Shaded rows are items that have been changed or added since last revision

ITEM	Notes	Rev	NPS1 / NPS2	Sch / Rat	Commodity Code	Opt	Description
PIPE	15		1/2" - 1-1/2" -	S-40S	PPSAB0S2FP00	1	Pipe, smls, SS, A312 TP304/304L, B36.19M, PE,,
PIPE			2" - 4" -	S-40S	PPSAB0S2FB00	1	Pipe, smls, SS, A312 TP304/304L, B36.19M, BE,,
PIPE			6" - 12" -	S-10S	PPSCBGS2FB00	1	Pipe, EFW, SS, A312 TP304/304L, B36.19M, BE,, (E=1.00) 100% X-Ray
NIP			1/2" - 1-1/2" -	S-40S	PNNIPBB3S2F0	1	Nipple, pipe, smls, SS, A312 TP304/304L, A733/B36.19M, 3" long, PBE,
NIP			1/2" - 1-1/2" -	S-40S	PNNIPBB6S2F0	740	Nipple, pipe, smls, SS, A312 TP304/304L, A733/B36.19M, 6" long, PBE,
NIP			1/2" - 1-1/2" -	S-80S	PNNIPBK3S2F0	725	Nipple, pipe, smls, SS, A312 TP304/304L, A733/B36.19M, 3" long, POE/TOE,
NIP			1/2" - 1-1/2" -	S-80S	PNNIPBK6S2F0	743	Nipple, pipe, smls, SS, A312 TP304/304L, A733/B36.19M, 6" long, POE/TOE,
NIP			1/2" - 1-1/2" -	S-80S	PNNIPBC6S2F0	739	Nipple, pipe, smls, SS, A312 TP304/304L, A733/B36.19M, 6" long, TBE,
NIP			1/2" - 1-1/2" -	S-80S	PNNIPBC3S2F0	721	Nipple, pipe, smls, SS, A312 TP304/304L, A733/B36.19M, 3" long, TBE,
SWGC			3/4" - 1-1/2" 1/2" - 1-1/4"		PNSWC6BS2F00	1	Swage, concentric, SS, A312 TP304/304L, MSS-SP-95/B36.19M, PBE,
SWGC			2" - 4" 1/2" - 1-1/2"		PNSWC6FS3100	1	Swage, concentric, A403 WP304/304L-S, MSS-SP-95/B36.19M, BLE/PSE,
SWGE			3/4" - 1-1/2" 1/2" - 1-1/4"		PNSWE6BS2F00	1	Swage, eccentric, SS, A312 TP304/304L, MSS-SP-95/B36.19M, PBE,
SWGE			2" - 4" 1/2" - 1-1/2"		PNSWE6FS3100	1	Swage, eccentric, A403 WP304/304L-S, MSS-SP-95/B36.19M, BLE/PSE,
CAPOT			1/2" - 1-1/2"	CL 3000	PRCAPDSKS2M0	1	Cap, SW, A182 F304/304L, B16.11, CL 3000,
CPL			1/2" - 1-1/2"	CL 3000	PRCPFDSKS2M0	1	Cplg full, SW, A182 F304/304L, B16.11, CL 3000,
CPLR			3/4" - 1-1/2" 1/2" - 1"	CL 3000	PRCPRD2KS2M0	1	Cplg red, SW, A182 F304/304L, B16.11, CL 3000,
E45			1/2" - 1-1/2"	CL 3000	PRE45DSKS2M0	1	45 D elbow, SW, A182 F304/304L, B16.11, CL 3000,
E90			1/2" - 1-1/2"	CL 3000	PRE90DSKS2M0	1	90 D elbow, SW, A182 F304/304L, B16.11, CL 3000,
TEE			1/2" - 1-1/2"	CL 3000	PRTEEDSKS2M0	1	Tee, SW, A182 F304/304L, B16.11, CL 3000,
TRB			3/4" - 1-1/2" 1/2" - 1"	CL 3000	PRTRBD2KS2M0	1	Tee red, SW, A182 F304/304L, B16.11, CL 3000,
UN			1/2" - 1-1/2"	CL 3000	PRUNID2KS2MN	1	Union, SW, A182 F304/304L, B16.11 & MSS SP-83, CL 3000, 347 SS/graph filled, SW gskt and 304 SS retainer, Nicholson Uniflex
CAPOT			1/2" - 1-1/2"	CL 3000	PSCAPDTKS2M0	541	Cap, thd, A182 F304/304L, B16.11, CL 3000,
PLUG			3/4" - 1-1/2"	-	PSPLUDM0S2MH	1	Plug, thd, A182 F304/304L, B16.11,, hex head
CAPBV			2" - 4"		PWCAPAAS3100	1	Cap, B16.9, BE, A403 WP304/304L-S,
CAPBV			6" - 12"		PWCAPAAS5100	1	Cap, B16.9, BE, A403 WP304/304L-WX,
E45LR			2" - 4"		PWE4LAAS3100	1	45 LR elbow, B16.9, BE, A403 WP304/304L-S,
E45LR			6" - 12"		PWE4LAAS5100	1	45 LR elbow, B16.9, BE, A403 WP304/304L-WX,
E90LR			2" - 4"		PWE9LAAS3100	1	90 LR elbow, B16.9, BE, A403 WP304/304L-S,
90LR			6" - 12"		PWE9LAAS5100	1	90 LR elbow, B16.9, BE, A403 WP304/304L-WX,
90SR			2" - 4"		PWE9SAAS3100	1	90 SR elbow, B16.9, BE, A403 WP304/304L-S,
			6" - 12"				90 SR, B16.9, BE, A403 WP304/304L-WX,

ITEM	Notes	Rev	NPS1 / NPS2	Sch / Rat	Commodity Code	Opt	Description
E90SR					PWE9SAAS5100	1	
TEE			2" - 4"		PWTEEAAS3100	1	Tee, B16.9, BE, A403 WP304/304L-S,
TEE			6" - 12"		PWTEEAAS5100	1	Tee, B16.9, BE, A403 WP304/304L-WX,
REDC			3" - 4" 2" - 3"		PWRECA1S3100	1	Conc red, B16.9, BE x BE, A403 WP304/304L-S,
REDC			6" - 12" 3" - 10"		PWRECA1S5100	1	Conc red, B16.9, BE x BE, A403 WP304/304L-WX,
REDE			3" - 4" 2" - 3"		PWREEA1S3100	1	Ecc red, B16.9, BE x BE, A403 WP304/304L-S,
REDE			6" - 12" 3" - 10"		PWREEA1S5100	1	Ecc red, B16.9, BE x BE, A403 WP304/304L-WX,
TRB	27		2" - 4" 1-1/2" - 3"		PWTRBA1S3100	1	Tee red, B16.9, BE x BE, A403 WP304/304L-S,
TRB			6" - 12" 3" - 10"		PWTRBA1S5100	1	Tee red, B16.9, BE x BE, A403 WP304/304L-WX,
FOWN	07, 15		2" - 12"	CL 300	PJEFBA1S2M00	1	Orif WN .5 SW tap, A182 F304/304L, B16.36, CL 300, RFFE,
FSW	07		1/2" - 1-1/2"	CL 150	PFSWAAAS2M00	1	Flg, SW, A182 F304/304L, B16.5, CL 150, RFFE,
FSW	07, 11		1/2" - 1-1/2"	CL 300	PFSWAABS2M00	773	Flg, SW, A182 F304/304L, B16.5, CL 300, RFFE,
FWN	07		2" - 12"	CL 150	PFWNAAAS2M00	1	Flg, WN, A182 F304/304L, B16.5, CL 150, RFFE,
FWN	07, 11		2" - 12"	CL 300	PFWNAABS2M00	773	Flg, WN, A182 F304/304L, B16.5, CL 300, RFFE,
FBLD	07		1/2" - 12"	CL 150	PFBLAAAS2M00	1	Flg, blind, A182 F304/304L, B16.5, CL 150, RFFE,
FBLD	07, 11		1/2" - 12"	CL 300	PFBLAABS2M00	773	Flg, blind, A182 F304/304L, B16.5, CL 300, RFFE,
BWPIPET			6" - 12" 2" - 6"		PWLWPKWS2M00	1	Light wall pipet, MSS-SP-97, BE x BE, A182 F304/304L,
SOL			2" - 4" 1/2" - 1-1/2"	CL 3000	PRSOLKSKS2M0	1	Sockolet, A182 F304/304L, MSS-SP-97, CL 3000,
SWPIPET			6" - 12" 1/2" - 1-1/2"	CL 300	PRPPEKSBS2M0	1	Light wall pipet, SW, A182 F304/304L, MSS-SP-97, CL 300,
TOL	15		2" - 4" 1/2" - 1-1/2"	CL 3000	PSTOLKTKS2M0	1	Thredolet, A182 F304/304L, MSS-SP-97, CL 3000,
WOL			4" - 4" 2" - 2"		PWWOLKWS2M00	1	Weldolet, MSS-SP-97, BE x BE, A182 F304/304L,
BALF	15		1/2" - 1-1/2"	1000 PSI CWP	VBFD7SS1GLAVAQBC	1	Valve, Ball, 1000 PSI CWP, SW, A351 CF3M, lever, Full port- TAG NUMBER: VBDI01
BALF	15		2" - 6"	CL 150	VBAAAAS1LLGLCBAA	1	Valve, Ball, CL 150, RFFE, A351 CF8M, lever, Reg port- TAG NUMBER: VB1I01
BFYLP	16, 33		4" - 6"	CL 150	VFATA3S1LLBDALFH	1	Valve, Butterfly, CL 150, Lug Tapped RF, A351 CF8M, lever TAG NUMBER: VF1I01
BFYLP	16, 33		8" - 12"	CL 150	VFATA3S1LGBDALFH	1	Valve, Butterfly, CL 150, Lug Tapped RF, A351 CF8M, GO w/side HW TAG NUMBER: VF1I02
CKL	15		1/2" - 1-1/2"	CL 800	VCLDHSS2NBCBCSCV	1	Valve, Check, CL 800, SW, A182 F316/316L, Trim 10, Conv. port TAG NUMBER: VC8I01
CKS	15		2" - 6"	CL 150	VCAAAAS1LB1MDZAA	1	Valve, Check, CL 150, RFFE, A351 CF8M, Trim 10, Conv. port TAG NUMBER: VC1I02
GAUM	13, 15		3/4" - 3/4"	5000 PSI	VUAD8UM3HRAGGCGH	1	Valve, Gauge, 5000 PSI, PE X FTE, A479 Gr 316L, T-handle short, one SS bleed valve & two 0.5" SS hex plugs, 3 FTE ports TAG NUMBER: VUHI01
GLO	15		2" - 10"	CL 150	VLAAAAS1LABSDTAA	1	Valve, Globe, CL 150, RFFE, A351 CF8M, Trim 10, HW, Reg port TAG NUMBER: VL1I02
GLOR	15		1/2" - 1-1/2"	CL 800	VLDDHSS2NABRESCV	1	Valve, Globe, CL 800, SW, A182 F316/316L, Trim 10, HW, Reg port TAG NUMBER: VL8I02
VENT/DRAIN	15, 17		3/4" - 1-1/2"	1000 PSI CWP	VBFG7WS1GLAVAQCG	1	Valve, Ball, 1000 PSI CWP, SW x FTE, A351 CF3M, lever, Full port- TAG NUMBER: VBDI02
GASINS			1/2" - 12"	CL 150	PGFKAA0ENAID	1	Gasket, insul kit, RFFE, 316SS retainer w/ EPDM seal, B16.5,, CL 150, two SS washers for each bolt, without insulation sleeve or washers, 300F max temp, GPT Linebacker
GASINS-1	29		1/2" - 12"	CL 300	PGFKAA0ENBID	1	Gasket, insul kit, RFFE, 316SS retainer w/ EPDM seal, B16.5,, CL 300, two SS washers for each bolt, without insulation sleeve or washers, 300F max temp, GPT Linebacker
BLTG			1/2" - 12"		PTS2101B8T00	1	Stud bolt w/2 nuts, A193 Gr. B8M CL2 w/ A194 Gr. 8MA nuts, B18.2.1/B18.2.2.
CAPSCREW			4" - 12"		PTC0A03B8G00	1	Cap screw, A193 Gr. B8M CL2, B18.2.1.

)0° Degree BRANCH CONNECTION
.egend and chart

BRANCH											
12	TEE										
10	TRB	TEE									
8	TRB	TRB	TEE								
6	LWP	TRB	TRB	TEE							
4	LWP	LWP	TRB	TRB	TEE						
3	LWP	LWP	LWP	TRB	TRB	TEE					
2	LWP	LWP	LWP	LWP	WOL	TRB	TEE				
1.5	LWP	LWP	LWP	LWP	SOL	SOL	TRB	TES			
1	LWP	LWP	LWP	LWP	SOL	SOL	SOL	TRS	TES		
.75	LWP	LWP	LWP	LWP	SOL	SOL	SOL	TRS	TRS	TES	
.5	LWP	LWP	LWP	LWP	SOL	SOL	SOL	TRS	TRS	TRS	TES
	12	10	8	6	4	3	2	1.5	1	.75	.5

HEADER

LWP	Light wall pipet
TES	Tee, SW
TRS	Tee red, SW
SOL	Sockolet
LWP	Light wall pipet, SW
TRB	Tee red
WOL	Weldolet
TEE	Tee

SPECIFICATION NOTES:

07	Flanges per this pipe class shall be used in lines allowing for hands-on maintenance only.
1	Use only when necessary to connect to similar connections.
3	Use as block valve for instrumentation connections.
15	Component per this pipe class shall not be used behind shielding.
16	Component per this pipe class shall be used in lines allowing for hands-on maintenance only.
17	Component shall not be used on Process Vent lines.
27	For 2" by 1-1/2" branch reduction use a reducing tee and bevel the 1-1/2" plain end branch pipe or use a 2" straight tee with swage.
29	GPT Linebacker gasket is not recommended for sizes greater than 20" NPS for Class 300 flanges as overstressing the bolts may occur to properly seal the gasket based on GPT torque recommendations.
33	Component shall not be used in lines with the potential for radioactive service.

GENERAL NOTES:

G05	Minimum pipe size shall be NPS 3/4, except for individual instrument leads, pump & compressor auxiliary piping and for reduction at instruments or other equipment normally provided with smaller than NPS 3/4 connections.

Commodity Code Valve Summary

Revised Date: 18-JAN-16

Commodity Code

VBFD7SS1GLAVAQBC

Valve, Ball, 1000 PSI CWP, SW, A351 CF3M, lever, Full port- TAG NUMBER: VBDI01

Valve, Ball, Socketweld, Full Port, 1000 PSI CWP, Socketweld,ASTM A351 CF3M, Floating ball, Three-piece, Full port, -, Antistatic design, Lever operator, 316SS, 316SS, RTFE, PTFE, Manufacturers standard, ASME B16.34 ASME B16.34 ASME B16.11 Manufacturers standard API 598

TYPE	: Ball, Socketweld, Full Port
RATING	: 1000 PSI CWP
PRESS/TEMP LIMITS	:
ENDS	: Socketweld
SCHEDULE	: -
BODY	: ASTM A351 CF3M
OPERATOR	: Lever operator
PORT	: Full port
CONFIGURATION	: Floating ball-Three-piece
BALL MATL	: 316SS
SEAT	: RTFE
STEM	: 316SS
SEAL	: PTFE
BOLTING	: Manufacturers standard
OPTIONS	: Antistatic design
STANDARDS:	: Conforming to
DESIGN STD.	: ASME B16.34
END STD.	: ASME B16.11
RATING STD.	: ASME B16.34
TESTING STD.	: API 598
DIMENSIONAL STD.	: Manufacturers standard

*

TAG NUMBER: VBDI01

Commodity Code Valve Summary

Revised Date: 18-JAN-16

Commodity Code

VBAAAAS1LLGLCBAA

Valve, Ball, CL 150, RFFE, A351 CF8M, lever, Reg port- TAG NUMBER: VB1I01

Valve, Ball, Flanged, Long Pattern, Class 150, Raised face flanged end,ASTM A351 CF8M, Floating ball, Two-piece, Regular port, -, Antistatic design, Lever operator, 316SS, 316SS, PTFE, PTFE, -, Full ASME rating @ -20F (-29C) to 250F (121C), ASME B16.34, ASME B16.34, ASME B16.5, ASME B16.10, API 598

TYPE	: Ball, Flanged, Long Pattern
RATING	: Class 150
PRESS/TEMP LIMITS	: Full ASME rating @ -20F (-29C) to 250F (121C)
ENDS	: Raised face flanged end
SCHEDULE	: -
BODY	: ASTM A351 CF8M
OPERATOR	: Lever operator
PORT	: Regular port
CONFIGURATION	: Floating ball-Two-piece
BALL MATL	: 316SS
SEAT	: PTFE
STEM	: 316SS
SEAL	: PTFE
BOLTING	: -
OPTIONS	: Antistatic design
STANDARDS:	: Conforming to
DESIGN STD.	: ASME B16.34
END STD.	: ASME B16.5
RATING STD.	: ASME B16.34
TESTING STD.	: API 598
DIMENSIONAL STD.	: ASME B16.10

*

TAG NUMBER: VB1I01

Commodity Code Valve Summary

Revised Date: 28-JAN-16

Commodity Code

VFATA3S1LLBDALFH

Valve, Butterfly, CL 150, Lug Tapped RF, A351 CF8M, lever TAG NUMBER: VF1I01

Valve, Butterfly, Lug Type, Class 150, Lug type with tapped holes to fit between raised face flanges, ASTM A351 CF8M, 316 SS - Bi-directional and suitable for bubble tight dead end service, Lever operator, 316 SS EPDM BUNA-N, ASME B16.34, Manufacturers standard, ASME B16.5, Manufacturers standard, API 598

TYPE : Butterfly, Lug Type
RATING : Class 150
ENDS : Lug type with tapped holes to fit between raised face flanges
SCHEDULE : -
BODY MATL : ASTM A351 CF8M
OPERATOR : Lever operator
PORT : -
CONFIGURATION : -
DISC : 316 SS
SEAT : EPDM
STEM : 316 SS
BODY TYPE : -
STEM PACKING : BUNA-N
OPTIONS : Bi-directional and suitable for bubble tight dead end service

STANDARDS: : Conforming to
DESIGN STD. : ASME B16.34
END STD. : ASME B16.5
RATING STD. : Manufacturers standard
TESTING STD. : API 598
DIMENSIONAL STD. : Manufacturers standard

* TAG NUMBER: VF1I01

Commodity Code Valve Summary

Revised Date: 28-JAN-16

Commodity Code

VFATA3S1LGBDALFH

Valve, Butterfly, CL 150, Lug Tapped RF, A351 CF8M, GO w/side HW
TAG NUMBER: VF1I02

Valve, Butterfly, Lug Type, Class 150, Lug type with tapped holes to fit between raised face flanges, ASTM A351 CF8M, 316 SS - Bi-directional and suitable for bubble tight dead end service, Gear operator with side handwheel, 316 SS EPDM BUNA-N, ASME B16.34, Manufacturers standard, ASME B16.5, Manufacturers standard, API 598

TYPE : Butterfly, Lug Type
RATING : Class 150
ENDS : Lug type with tapped holes to fit between raised face flanges
SCHEDULE : -
BODY MATL : ASTM A351 CF8M
OPERATOR : Gear operator with side handwheel
PORT : -
CONFIGURATION : -
DISC : 316 SS
SEAT : EPDM
STEM : 316 SS
BODY TYPE : -
STEM PACKING : BUNA-N
OPTIONS : Bi-directional and suitable for bubble tight dead end service

STANDARDS: : Conforming to
DESIGN STD. : ASME B16.34
END STD. : ASME B16.5
RATING STD. : Manufacturers standard
TESTING STD. : API 598
DIMENSIONAL STD. : Manufacturers standard

* TAG NUMBER: VF1I02

Commodity Code Valve Summary

Revised Date: 14-JAN-16

Commodity Code

VCLDHSS2NBCBCSCV

Valve, Check, CL 800, SW, A182 F316/316L, Trim 10, Conv. port - TAG NUMBER: VC8I01

Valve, Check Lift, Socketweld Conventional Port, Class 800, Socketweld, ASTM A182 F316/316L, Piston lift, Conventional port, API trim 10, -, with spring, -, Bolted cover, -, Manufacturers standard, API 602, - - -,horizontal with cover up or vertical upward flow, API 602, API 602, ASME B16.11, Manufacturers standard, API 598

TYPE	: Check Lift, Socketweld Conventional Port
DESIGN	: Piston lift
RATING	: Class 800
ENDS	: Socketweld
SCHEDULE	: -
BODY / COVER MATL	: ASTM A182 F316/316L / -
COVER	: Bolted cover
API TRIM	: API trim 10
INSTALLATION	: horizontal with cover up or vertical upward flow
PORT	: Conventional port
DISC / SEAT	: - / -
GASKET	: API 602
BOLTING	: Manufacturers standard
HINGE PIN	: -
SPRINGS	: -
OPTIONS	: with spring
STANDARDS:	: Conforming to
DESIGN STD.	: API 602
END STD.	: ASME B16.11
RATING STD.	: API 602
TESTING STD.	: API 598
DIMENSIONAL STD.	: Manufacturers standard

* TAG NUMBER: VC8I01

Commodity Code Valve Summary

Revised Date: 18-OCT-13

Commodity Code

VCAAAAS1LB1MDZAA

Valve, Check, CL 150, RFFE, A351 CF8M, Trim 10, Conv. port - TAG NUMBER: VC1I02

Valve, Check, Swing, Flanged, Long Pattern, Class 150, Raised face flanged end, ASTM A351 CF8M, - Conventional port API trim 10 - - , Bolted cover, -, A193 B8M / A194 8M, ASME B16.34, - - -,horizontal with cover up or vertical upward flow, ASME B16.34, ASME B16.34, ASME B16.5, ASME B16.10, API 598

TYPE	: Check, Swing, Flanged, Long Pattern
DESIGN	: -
RATING	: Class 150
ENDS	: Raised face flanged end
SCHEDULE	: -
BODY / COVER MATL	: ASTM A351 CF8M / -
COVER	: Bolted cover
API TRIM	: API trim 10
INSTALLATION	: horizontal with cover up or vertical upward flow
PORT	: Conventional port
DISC / SEAT	: / -
GASKET	: ASME B16.34
BOLTING	: A193 B8M / A194 8M
HINGE PIN	: -
SPRINGS	: -
OPTIONS	: -
STANDARDS:	: Conforming to
DESIGN STD.	: ASME B16.34
END STD.	: ASME B16.5
RATING STD.	: ASME B16.34
TESTING STD.	: API 598
DIMENSIONAL STD.	: ASME B16.10

* TAG NUMBER: VC1I02

Commodity Code Valve Summary

Revised Date: 14-JAN-16

Commodity Code

VUAD8UM3HRAGGCGH

Valve, Gauge, 5000 PSI, PE X FTE, A479 Gr 316L, T-handle short, one SS bleed valve & two 0.5" SS hex plugs, 3 FTE ports TAG NUMBER: VUHI01

Valve, Gauge, Male Welded End x Multi Female Threaded End, Reducing, 5000 PSI, Male plain end x female threaded end, ASTM A479 Grade 316L, one SS bleed valve & two 0.5" SS hex plugs, 3 Female threaded ports, Short T-handle operator, Outside Screw & Yoke, 316SS, corrosion-inhibited die-formed flexible graphite w/ anti-extrusion rings, Integral Seat, MSS SP-105, ASME B16.34, ASME B1.20.1, Manufacturers standard, MSS SP-61

TYPE : Gauge, Male Welded End x Multi Female Threaded End, Reducing
RATING : 5000 PSI
ENDS : Male plain end x female threaded end
BODY MATL : ASTM A479 Grade 316L
API TRIM :
OPERATOR : Short T-handle operator
PORT :
CONFIGURATION : Outside Screw & Yoke
BONNET TYPE :
SEAT : Integral Seat
STEM : 316SS
STEM PACKING : corrosion-inhibited die-formed flexible graphite w/ anti-extrusion rings
OPTIONS : one SS bleed valve & two 0.5" SS hex plugs 3 Female threaded ports

STANDARDS: : Conforming to
DESIGN STD. : MSS SP-105
END STD. : ASME B1.20.1
RATING STD. : ASME B16.34
TESTING STD. : MSS SP-61
DIMENSIONAL STD. : Manufacturers standard

* TAG NUMBER: VUHI01

Commodity Code Valve Summary

Revised Date: 18-OCT-13

Commodity Code

VLAAAAS1LABSDTAA

Valve, Globe, CL 150, RFFE, A351 CF8M, Trim 10, HW, Reg port - TAG NUMBER: VL1I02

Valve, Globe, Flanged Ends, Long pattern, Class 150, Raised face flanged end, ASTM A351 CF8M, T-Body, Regular port, API trim 10, - - -, Handwheel operator, Bolted bonnet, -, A193 B8M / A194 8M, ASME B16.34, Outside Screw & Yoke, -, corrosion-inhibited die-formed flexible graphite w/ anti-extrusion rings -, ASME B16.34, ASME B16.34, ASME B16.5, ASME B16.10, API 598

TYPE	: Globe, Flanged Ends, Long pattern
RATING	: Class 150
ENDS	: Raised face flanged end
SCHEDULE	: -
BODY / BONNET MATL	: ASTM A351 CF8M / -
CLOSURE	: -
DISC / PLUG MATL	:
API TRIM	: API trim 10
OPERATOR	: Handwheel operator
PORT	: Regular port
CONFIGURATION	: Outside Screw & Yoke
BONNET TYPE	: Bolted bonnet
SEAT	: -
STEM	: -
STEM PACKING	: corrosion-inhibited die-formed flexible graphite w/ anti-extrusion rings
BONNET BOLTING	: A193 B8M / A194 8M
BONNET GASKET	: ASME B16.34
OPTIONS	: -
STANDARDS:	: Conforming to
DESIGN STD.	: ASME B16.34
END STD.	: ASME B16.5
RATING STD.	: ASME B16.34
TESTING STD.	: API 598
DIMENSIONAL STD.	: ASME B16.10

* TAG NUMBER: VL1I02

Commodity Code Valve Summary

Revised Date: 23-DEC-15

Commodity Code

VLDDHSS2NABRESCV

Valve, Globe, CL 800, SW, A182 F316/316L, Trim 10, HW, Reg port - TAG NUMBER: VL8I02

Valve, Globe, Socketweld, Regular Port, Class 800, Socketweld, ASTM A182 F316/316L, T-Body, Regular port, API trim 10, - - Plug Type, Handwheel operator, Bolted bonnet, - , A320 B8 / A194 Gr. 8, API 602, Outside Screw & Yoke, -, corrosion-inhibited die-formed flexible graphite w/ anti-extrusion rings, -, API 602, API 602, ASME B16.11, Manufacturers standard, API 598

TYPE	: Globe, Socketweld, Regular Port
RATING	: Class 800
ENDS	: Socketweld
SCHEDULE	: -
BODY / BONNET MATL	: ASTM A182 F316/316L / -
CLOSURE	: Plug Type
DISC / PLUG MATL	:
API TRIM	: API trim 10
OPERATOR	: Handwheel operator
PORT	: Regular port
CONFIGURATION	: Outside Screw & Yoke
BONNET TYPE	: Bolted bonnet
SEAT	: -
STEM	: -
STEM PACKING	: corrosion-inhibited die-formed flexible graphite w/ anti-extrusion rings
BONNET BOLTING	: A320 B8 / A194 Gr. 8
BONNET GASKET	: API 602
OPTIONS	: -
STANDARDS:	: Conforming to
DESIGN STD.	: API 602
END STD.	: ASME B16.11
RATING STD.	: API 602
TESTING STD.	: API 598
DIMENSIONAL STD.	: Manufacturers standard

* TAG NUMBER: VL8I02

Commodity Code Valve Summary

Revised Date: 18-JAN-16

Commodity Code

VBFG7WS1GLAVAQCG

Valve, Ball, 1000 PSI CWP, SW x FTE, A351 CF3M, lever, Full port-
TAG NUMBER: VBDI02

Valve, Ball, Socketweld X Female, Threaded Ends, Full Port, 1000 PSI CWP, Socketweld x female threaded end,ASTM A351 CF3M, Floating ball, Three-piece, Full port, -, Antistatic design, Lever operator, 316SS, 316SS, RTFE, PTFE, Manufacturers standard, ASME B16.34 ASME B16.34 ASME B16.11 / ASME B1.20.1 Manufacturers standard API 598

TYPE	: Ball, Socketweld X Female, Threaded Ends, Full Port
RATING	: 1000 PSI CWP
PRESS/TEMP LIMITS	:
ENDS	: Socketweld x female threaded end
SCHEDULE	: -
BODY	: ASTM A351 CF3M
OPERATOR	: Lever operator
PORT	: Full port
CONFIGURATION	: Floating ball-Three-piece
BALL MATL	: 316SS
SEAT	: RTFE
STEM	: 316SS
SEAL	: PTFE
BOLTING	: Manufacturers standard
OPTIONS	: Antistatic design
STANDARDS:	: Conforming to
DESIGN STD.	: ASME B16.34
END STD.	: ASME B16.11 / ASME B1.20.1
RATING STD.	: ASME B16.34
TESTING STD.	: API 598
DIMENSIONAL STD.	: Manufacturers standard

*

TAG NUMBER: VBDI02

Material Specification P7

CL300, 316/316L SS - SL, SN

Prepared For: WRPS

Project: 31269 - Low Activity Waste Pretreatment System (LAWPS)

AECOM ATKINS AREVA

CORROSION ALLOWANCE	0.063in	DESIGN CODE	ASME B31.3
EXAMINATION	Per ASME B31.3	MATERIAL	316/316L Dual Marked
RATING CLASS	CL300, ASME B16.5	STRESS RELIEF	Not Req'd
TEMPERATURE LIMIT	-20F to 200F		

PRESSURE - TEMPERATURE RATINGS

Temp F	-20	100	200
Temp C	-29	38	93

psig	720	720	620
kPag	4965	4965	4275

SPECIFICATION NOTES:
01

NOTE: Shaded rows are items that have been changed or added since last revision

ITEM	Notes	Rev	NPS1 / NPS2	Sch / Rat	Commodity Code	Opt	Description
PIPE	01		2" - 3" -	S-40S	PPSAB0S2NB00	1	Pipe, smls, SS, A312 TP316/316L, B36.19M, BE,,
CAPBV			2" - 3"		PWCAPAAS3N00	1	Cap, B16.9, BE, A403 WP316/316L-S,
E45LR			2" - 3"		PWE4LAAS3N00	1	45 LR elbow, B16.9, BE, A403 WP316/316L-S,
E90LR			2" - 3"		PWE9LAAS3N00	1	90 LR elbow, B16.9, BE, A403 WP316/316L-S,
REDC			3" - 3" 2" - 2"		PWRECA1S3N00	1	Conc red, B16.9, BE x BE, A403 WP316/316L-S,
REDE			3" - 3" 2" - 2"		PWREEA1S3N00	1	Ecc red, B16.9, BE x BE, A403 WP316/316L-S,

90° Degree BRANCH CONNECTION
Legend and chart

B	**HEADER**
R	
A	
N	
C	
H	

SPECIFICATION NOTES:

01 Encasement piping shall be two pipe sizes larger than the corresponding carrier piping.

GENERAL NOTES:

G11 This specification shall be used in conjunction with encasement piping, Specification P8. This spec-
G13 ification does not require branch connections.

Commodity Code Valve Summary

Material Specification P8

CL300, Carbon Steel - SL, SN

Prepared For: WRPS

Project: 31269 - Low Activity Waste Pretreatment System (LAWPS)

AECOM ATKINS AREVA

CORROSION ALLOWANCE	0.063in	DESIGN CODE	ASME B31.3
EXAMINATION	Per ASME B31.3	MATERIAL	CS
RATING CLASS	CL300, ASME B16.5	STRESS RELIEF	Not Req'd
TEMPERATURE LIMIT	-20F to 150F		

PRESSURE - TEMPERATURE RATINGS

Temp F	-20	100	150
Temp C	-29	38	66

psig	50	50	50
kPag	345	345	345

SPECIFICATION NOTES:
01

NOTE: Shaded rows are items that have been changed or added since last revision

ITEM	Notes	Rev	NPS1 / NPS2	Sch / Rat	Commodity Code	Opt	Description
PIPE	01		4" - 6" -	S-STD	PPAAA0C6BBCW	9000	Pipe, smls, A106 Gr B, B36.10M, BE, C & W per project spec ,
PIPE	01		4" - 6" -	S-STD	PPAAA0C6BB00	1	Pipe, smls, A106 Gr B, B36.10M, BE,,
CAPBV			4" - 6"		PWCAPAAC4E00	1	Cap, B16.9, BE, A234 WPB-S,
E45LR			4" - 6"		PWE4LAAC4E00	1	45 LR elbow, B16.9, BE, A234 WPB-S,
E90LR			4" - 6"		PWE9LAAC4E00	1	90 LR elbow, B16.9, BE, A234 WPB-S,
E90SR			4" - 6"		PWE9SAAC4B00	1	90 SR elbow, B16.9, BE, A234 WPB,
REDC			6" - 6" 4" - 4"		PWRECA1C4E00	1	Conc red, B16.9, BE x BE, A234 WPB-S,
REDE			6" - 6" 4" - 4"		PWREEA1C4E00	1	Ecc red, B16.9, BE x BE, A234 WPB-S,

90° Degree BRANCH CONNECTION
Legend and chart

B R A N C H	HEADER

SPECIFICATION NOTES:

01 Encasement piping shall be two pipe sizes larger than the corresponding carrier piping.

GENERAL NOTES:

G12 This specification shall be used in conjunction with carrier piping. Specification P7.

G13 This specification does not require branch connections.

Commodity Code Valve Summary

Material Specification P9

CL150, 304/304L SS - AIR, EXH

Prepared For: WRPS

Project: 31269 - Low Activity Waste Pretreatment System (LAWPS)

AECOM ATKINS AREVA

CORROSION ALLOWANCE	0.063in	DESIGN CODE	ASME B31.3
EXAMINATION	Per ASME B31.3	MATERIAL	304/304L Dual Marked
RATING CLASS	CL150, ASME B16.5	STRESS RELIEF	Not Req'd
TEMPERATURE LIMIT	-20F to 200F		

PRESSURE - TEMPERATURE RATINGS

Temp F	-20	100	200
Temp C	-29	38	93

psig	100	100	100
kPag	690	690	690

SPECIFICATION NOTES:
07, 13, 17, 11, 29, 16, 33, 15, 27

NOTE: Shaded rows are items that have been changed or added since last revision

ITEM	Notes	Rev	NPS1 / NPS2	Sch / Rat	Commodity Code	Opt	Description
PIPE	15		1/2" - 1-1/2" -	S-40S	PPSAB0S2FP00	1	Pipe, smls, SS, A312 TP304/304L, B36.19M, PE,,
PIPE			2" - 4" -	S-40S	PPSAB0S2FB00	1	Pipe, smls, SS, A312 TP304/304L, B36.19M, BE,,
PIPE			6" - 20" -	S-10S	PPSCBGS2FB00	1	Pipe, EFW, SS, A312 TP304/304L, B36.19M, BE,, (E=1.00) 100% X-Ray
PIPE			24" - 24" -	S-10S	PPSCBGS2FB00	1	Pipe, EFW, SS, A312 TP304/304L, B36.19M, BE,, (E=1.00) 100% X-Ray
PIPE			30" - 30" -	S-STD	PPSCBGS2FB00	1	Pipe, EFW, SS, A312 TP304/304L, B36.19M, BE,, (E=1.00) 100% X-Ray
PIPE			36" - 36" -	S-STD	PPACAGS2FB00	1	Pipe, EFW, SS, A312 TP304/304L, B36.10M, BE,, (E=1.00) 100% X-Ray
NIP	15		1/2" - 1-1/2" -	S-80S	PNNIPBK3S2F0	725	Nipple, pipe, smls, SS, A312 TP304/304L, A733/B36.19M, 3" long, POE/TOE,
NIP	15		1/2" - 1-1/2" -	S-80S	PNNIPBK6S2F0	743	Nipple, pipe, smls, SS, A312 TP304/304L, A733/B36.19M, 6" long, POE/TOE,
NIP	15		1/2" - 1-1/2" -	S-80S	PNNIPBC6S2F0	739	Nipple, pipe, smls, SS, A312 TP304/304L, A733/B36.19M, 6" long, TBE,
NIP	15		1/2" - 1-1/2" -	S-80S	PNNIPBC3S2F0	721	Nipple, pipe, smls, SS, A312 TP304/304L, A733/B36.19M, 3" long, TBE,
NIP	15		1/2" - 1-1/2" -	S-40S	PNNIPBB3S2F0	1	Nipple, pipe, smls, SS, A312 TP304/304L, A733/B36.19M, 3" long, PBE,
NIP	15		1/2" - 1-1/2" -	S-40S	PNNIPBB6S2F0	740	Nipple, pipe, smls, SS, A312 TP304/304L, A733/B36.19M, 6" long, PBE,
SWGC	15		2" - 4" 1/2" - 1-1/2"		PNSWC6FS3100	1	Swage, concentric, A403 WP304/304L-S, MSS-SP-95/B36.19M, BLE/PSE,
SWGE	15		2" - 4" 1/2" - 1-1/2"		PNSWE6FS3100	1	Swage, eccentric, A403 WP304/304L-S, MSS-SP-95/B36.19M, BLE/PSE,
CAPOT	15		1/2" - 1-1/2"	CL 3000	PRCAPDSKS2M0	1	Cap, SW, A182 F304/304L, B16.11, CL 3000,
CPL	15		1/2" - 1-1/2"	CL 3000	PRCPFDSKS2M0	1	Cplg full, SW, A182 F304/304L, B16.11, CL 3000,
CPL	15		1/2" - 1-1/2"	CL 3000	PSCPFDFKS2M0	541	Cplg full, thd, A182 F304/304L, B16.11, CL 3000,
CPLR	15		3/4" - 1-1/2" 1/2" - 1"	CL 3000	PRCPRD2KS2M0	1	Cplg red, SW, A182 F304/304L, B16.11, CL 3000,
CPLR	15		3/4" - 1-1/2" 1/2" - 1"	CL 3000	PSCPRD3KS2M0	541	Cplg red, thd, A182 F304/304L, B16.11, CL 3000,
E45	15		1/2" - 1-1/2"	CL 3000	PRE45DSKS2M0	1	45 D elbow, SW, A182 F304/304L, B16.11, CL 3000,
E90	15		1/2" - 1-1/2"	CL 3000	PRE90DSKS2M0	1	90 D elbow, SW, A182 F304/304L, B16.11, CL 3000,
TEE	15		1/2" - 1-1/2"	CL 3000	PRTEEDSKS2M0	1	Tee, SW, A182 F304/304L, B16.11, CL 3000,
TRB	15		3/4" - 1-1/2" 1/2" - 1"	CL 3000	PRTRBD2KS2M0	1	Tee red, SW, A182 F304/304L, B16.11, CL 3000,
UN	15		1/2" - 1-1/2"	CL 3000	PRUNID2KS2MN	1	Union, SW, A182 F304/304L, B16.11 & MSS SP-83, CL 3000, 347 SS/graph filled, SW gskt and 304 SS retainer, Nicholson Uniflex
CAPOT	15		1/2" - 1-1/2"	CL 3000	PSCAPDTKS2M0	541	Cap, thd, A182 F304/304L, B16.11, CL 3000,
PLUG	15		3/4" - 1-1/2"	-	PSPLUDM0S2MH	1	Plug, thd, A182 F304/304L, B16.11,, hex head
CAPBV			2" - 4"		PWCAPAAS3100	1	Cap, B16.9, BE, A403 WP304/304L-S,
CAPBV			6" - 36"		PWCAPAAS5100	1	Cap, B16.9, BE, A403 WP304/304L-WX,
45LR			2" - 4"		PWE4LAAS3100	1	45 LR elbow, B16.9, BE, A403 WP304/304L-S,

ITEM	Notes	Rev	NPS1 / NPS2	Sch / Rat	Commodity Code	Opt	Description
E45LR			6" - 36"		PWE4LAAS5100	1	45 LR elbow, B16.9, BE, A403 WP304/304L-WX,
E90LR			2" - 4"		PWE9LAAS3100	1	90 LR elbow, B16.9, BE, A403 WP304/304L-S,
E90LR			6" - 36"		PWE9LAAS5100	1	90 LR elbow, B16.9, BE, A403 WP304/304L-WX,
E90SR			2" - 4"		PWE9SAAS3100	1	90 SR elbow, B16.9, BE, A403 WP304/304L-S,
E90SR			6" - 24"		PWE9SAAS5100	1	90 SR, B16.9, BE, A403 WP304/304L-WX,
TEE			2" - 4"		PWTEEAAS3100	1	Tee, B16.9, BE, A403 WP304/304L-S,
TEE			6" - 36"		PWTEEAAS5100	1	Tee, B16.9, BE, A403 WP304/304L-WX,
REDC			3" - 4" 2" - 3"		PWRECA1S3100	1	Conc red, B16.9, BE x BE, A403 WP304/304L-S,
REDC			6" - 36" 3" - 30"		PWRECA1S5100	1	Conc red, B16.9, BE x BE, A403 WP304/304L-WX,
REDE			3" - 4" 2" - 3"		PWREEA1S3100	1	Ecc red, B16.9, BE x BE, A403 WP304/304L-S,
REDE			6" - 36" 3" - 30"		PWREEA1S5100	1	Ecc red, B16.9, BE x BE, A403 WP304/304L-WX,
TRB	27		2" - 4" 1-1/2" - 3"		PWTRBA1S3100	1	Tee red, B16.9, BE x BE, A403 WP304/304L-S,
TRB			6" - 36" 3" - 30"		PWTRBA1S5100	1	Tee red, B16.9, BE x BE, A403 WP304/304L-WX,
FOWN	07, 15		2" - 20"	CL 300	PJBFBA1S2M00	1	Orif WN .5 SW tap, A182 F304/304L, B16.36, CL 300, RFFE,
FSW	07		1/2" - 1-1/2"	CL 150	PFSWAAAS2M00	1	Flg, SW, A182 F304/304L, B16.5, CL 150, RFFE,
FSW	07, 11		1/2" - 1-1/2"	CL 300	PFSWAABS2M00	773	Flg, SW, A182 F304/304L, B16.5, CL 300, RFFE,
FWN	07, 11		2" - 20"	CL 300	PFWNAABS2M00	773	Flg, WN, A182 F304/304L, B16.5, CL 300, RFFE,
FWN	07		2" - 24"	CL 150	PFWNAAAS2M00	1	Flg, WN, A182 F304/304L, B16.5, CL 150, RFFE,
FWN	07		30" - 36"	CL 150	PFWNBAAS2M00	1	Flg, WN, A182 F304/304L, B16.47A, CL 150, RFFE,
FBLD	07, 11		1/2" - 20"	CL 300	PFBLAABS2M00	773	Flg, blind, A182 F304/304L, B16.5, CL 300, RFFE,
FBLD	07		1/2" - 24"	CL 150	PFBLAAAS2M00	1	Flg, blind, A182 F304/304L, B16.5, CL 150, RFFE,
FBLD	07		30" - 36"	CL 150	PFBLBAAS2M00	1	Flg, blind, A182 F304/304L, B16.47A, CL 150, RFFE,
BWPIPET			6" - 24" 2" - 16"		PWLWPKWS2M00	1	Light wall pipet, MSS-SP-97, BE x BE, A182 F304/304L,
SOL	15		2" - 4" 1/2" - 1-1/2"	CL 3000	PRSOLKSKS2M0	1	Sockolet, A182 F304/304L, MSS-SP-97, CL 3000,
SOL	15		30" - 36" 1/2" - 1-1/2"	CL 3000	PRSOLKSKS2M0	1	Sockolet, A182 F304/304L, MSS-SP-97, CL 3000,
SWPIPET	15		6" - 24" 1/2" - 1-1/2"	CL 300	PRPPEKSBS2M0	1	Light wall pipet, SW, A182 F304/304L, MSS-SP-97, CL 300,
WOL			4" - 4" 2" - 2"		PWWOLKWS2M00	1	Weldolet, MSS-SP-97, BE x BE, A182 F304/304L,
WOL			30" - 36" 2" - 24"		PWWOLKWS2M00	1	Weldolet, MSS-SP-97, BE x BE, A182 F304/304L,
BALF	15		1/2" - 1-1/2"	1000 PSI CWP	VBFD7SS1GLAVAQBC	1	Valve, Ball, 1000 PSI CWP, SW, A351 CF3M, lever, Full port- TAG NUMBER: VBDI01
BALF	15		2" - 6"	CL 150	VBAAAAS1LLGLCBAA	1	Valve, Ball, CL 150, RFFE, A351 CF8M, lever, Reg port- TAG NUMBER: VB1I01
BFYLP	16, 33		4" - 6"	CL 150	VFATA3S1LLBDALFH	1	Valve, Butterfly, CL 150, Lug Tapped RF, A351 CF8M, lever TAG NUMBER: VF1I01
BFYLP	16, 33		8" - 20"	CL 150	VFATA3S1LGBDALFH	1	Valve, Butterfly, CL 150, Lug Tapped RF, A351 CF8M, GO w/side HW TAG NUMBER: VF1I02
CKL	15		1/2" - 1-1/2"	CL 800	VCLDHSS2NBCBCSCV	1	Valve, Check, CL 800, SW, A182 F316/316L, Trim 10, Conv. port TAG NUMBER: VC8I01
CKS	15		2" - 6"	CL 150	VCAAAAS1LB1MDZAA	1	Valve, Check, CL 150, RFFE, A351 CF8M, Trim 10, Conv. port TAG NUMBER: VC1I02
GAUM	13, 15		3/4" - 3/4"	5000 PSI	VUAD8UM3HRAGGCGH	1	Valve, Gauge, 5000 PSI, PE X FTE, A479 Gr 316L, T-handle short, one SS bleed valve & two 0.5" SS hex plugs, 3 FTE ports TAG NUMBER: VUHI01
GLO	15		2" - 10"	CL 150	VLAAAAS1LABSDTAA	1	Valve, Globe, CL 150, RFFE, A351 CF8M, Trim 10, HW, Reg port TAG NUMBER: VL1I02
GLOR	15		1/2" - 1-1/2"	CL 800	VLDDHSS2NABRESCV	1	Valve, Globe, CL 800, SW, A182 F316/316L, Trim 10, HW, Reg port TAG NUMBER: VL8I02
VENT/DRAIN	15, 17		3/4" - 1-1/2"	1000 PSI CWP	VBFG7WS1GLAVAQCG	1	Valve, Ball, 1000 PSI CWP, SW x FTE, A351 CF3M, lever, Full port- TAG NUMBER: VBDI02
GASINS			1/2" - 24"	CL 150	PGFKAA0ENAID	1	Gasket, insul kit, RFFE, 316SS retainer w/ EPDM seal, B16.5,, CL 150, two SS washers for each bolt, without insulation sleeve or

ITEM	Notes	Rev	NPS1 / NPS2	Sch / Rat	Commodity Code	Opt	Description
GASINS							washers, 300F max temp, GPT Linebacker
GASINS-1	29		1/2" - 20"	CL 300	PGFKAA0ENBID	1	Gasket, insul kit, RFFE, 316SS retainer w/ EPDM seal, B16.5,, CL 300, two SS washers for each bolt, without insulation sleeve or washers, 300F max temp, GPT Linebacker
GASO-1	15		30" - 36"	CL 150	PGFRBAATFAA0	1	Gasket, flat ring, RFFE, flexible graphite w/ 304SS corrugated insert, B16.47A, 1/16" thick, CL 150, ASME B16.21
BLTG			1/2" - 36"		PTS2101B8T00	1	Stud bolt w/2 nuts, A193 Gr. B8M CL2 w/ A194 Gr. 8MA nuts, B18.2.1/B18.2.2.
CAPSCREW			4" - 20"		PTC0A03B8G00	1	Cap screw, A193 Gr. B8M CL2, B18.2.1.

90° Degree BRANCH CONNECTION
Legend and chart

BRANCH	36	30	24	20	18	16	14	12	10	8	6	4	3	2	1.5	1	.75	.5
36	TEE																	
30	TRB	TEE																
24	TRB	TRB	TEE															
20	WOL	TRB	TRB	TEE														
18	WOL	WOL	TRB	TRB	TEE													
16	WOL	WOL	LWP	TRB	TRB	TEE												
14	WOL	WOL	LWP	LWP	TRB	TRB	TEE											
12	WOL	WOL	LWP	LWP	LWP	TRB	TRB	TEE										
10	WOL	WOL	LWP	LWP	LWP	LWP	TRB	TRB	TEE									
8	WOL	WOL	LWP	LWP	LWP	LWP	LWP	TRB	TRB	TEE								
6	WOL	WOL	LWP	LWP	LWP	LWP	LWP	LWP	TRB	TRB	TEE							
4	WOL	WOL	LWP	LWP	LWP	LWP	LWP	LWP	LWP	TRB	TRB	TEE						
3	WOL	WOL	LWP	LWP	LWP	LWP	LWP	LWP	LWP	LWP	TRB	TRB	TEE					
2	WOL	WOL	LWP	LWP	LWP	LWP	LWP	LWP	LWP	LWP	LWP	WOL	TRB	TEE				
1.5	SOL	SOL	LWP	LWP	LWP	LWP	LWP	LWP	LWP	LWP	LWP	SOL	SOL	TRB	TES			
1	SOL	SOL	LWP	LWP	LWP	LWP	LWP	LWP	LWP	LWP	LWP	SOL	SOL	SOL	TRS	TES		
.75	SOL	SOL	LWP	LWP	LWP	LWP	LWP	LWP	LWP	LWP	LWP	SOL	SOL	SOL	TRS	TRS	TES	
.5	SOL	SOL	LWP	LWP	LWP	LWP	LWP	LWP	LWP	LWP	LWP	SOL	SOL	SOL	TRS	TRS	TRS	TES
HEADER	36	30	24	20	18	16	14	12	10	8	6	4	3	2	1.5	1	.75	.5

LWP	Light wall pipet, SW
TEE	Tee
WOL	Weldolet
TES	Tee, SW
TRS	Tee red, SW
SOL	Sockolet
TRB	Tee red
LWP	Light wall pipet

SPECIFICATION NOTES:

07	Flanges per this pipe class shall be used in lines allowing for hands-on maintenance only.
11	Use only when necessary to connect to similar connections.
13	Use as block valve for instrumentation connections.
15	Component per this pipe class shall not be used behind shielding.
16	Component per this pipe class shall be used in lines allowing for hands-on maintenance only.
17	Component shall not be used on Process Vent lines.
27	For 2" by 1-1/2" branch reduction use a reducing tee and bevel the 1-1/2" plain end branch pipe or use a 2" straight tee with swage.
29	GPT Linebacker gasket is not recommended for sizes greater than 20" NPS for Class 300 flanges as overstressing the bolts may occur to properly seal the gasket based on GPT torque recommendations.
33	Component shall not be used in lines with the potential for radioactive service.

GENERAL NOTES:

G05	Minimum pipe size shall be NPS 3/4, except for individual instrument leads, pump & compressor auxiliary piping and for reduction at instruments or other equipment normally provided with smaller than NPS 3/4 connections.

Commodity Code Valve Summary

Revised Date: 18-JAN-16

Commodity Code	
VBFD7SS1GLAVAQBC	Valve, Ball, 1000 PSI CWP, SW, A351 CF3M, lever, Full port- TAG NUMBER: VBDI01

Valve, Ball, Socketweld, Full Port, 1000 PSI CWP, Socketweld,ASTM A351 CF3M, Floating ball, Three-piece, Full port, -, Antistatic design, Lever operator, 316SS, 316SS, RTFE, PTFE, Manufacturers standard, ASME B16.34 ASME B16.34 ASME B16.11 Manufacturers standard API 598

TYPE	: Ball, Socketweld, Full Port
RATING	: 1000 PSI CWP
PRESS/TEMP LIMITS	:
ENDS	: Socketweld
SCHEDULE	: -
BODY	: ASTM A351 CF3M
OPERATOR	: Lever operator
PORT	: Full port
CONFIGURATION	: Floating ball-Three-piece
BALL MATL	: 316SS
SEAT	: RTFE
STEM	: 316SS
SEAL	: PTFE
BOLTING	: Manufacturers standard
OPTIONS	: Antistatic design
STANDARDS:	: Conforming to
DESIGN STD.	: ASME B16.34
END STD.	: ASME B16.11
RATING STD.	: ASME B16.34
TESTING STD.	: API 598
DIMENSIONAL STD.	: Manufacturers standard

*

TAG NUMBER: VBDI01

Commodity Code Valve Summary

Revised Date: 18-JAN-16

Commodity Code

VBAAAAS1LLGLCBAA

Valve, Ball, CL 150, RFFE, A351 CF8M, lever, Reg port- TAG NUMBER: VB1I01

Valve, Ball, Flanged, Long Pattern, Class 150, Raised face flanged end,ASTM A351 CF8M, Floating ball, Two-piece, Regular port, -, Antistatic design, Lever operator, 316SS, 316SS, PTFE, PTFE, -, Full ASME rating @ -20F (-29C) to 250F (121C), ASME B16.34, ASME B16.34, ASME B16.5, ASME B16.10, API 598

TYPE	: Ball, Flanged, Long Pattern
RATING	: Class 150
PRESS/TEMP LIMITS	: Full ASME rating @ -20F (-29C) to 250F (121C)
ENDS	: Raised face flanged end
SCHEDULE	: -
BODY	: ASTM A351 CF8M
OPERATOR	: Lever operator
PORT	: Regular port
CONFIGURATION	: Floating ball-Two-piece
BALL MATL	: 316SS
SEAT	: PTFE
STEM	: 316SS
SEAL	: PTFE
BOLTING	: -
OPTIONS	: Antistatic design
STANDARDS:	: Conforming to
DESIGN STD.	: ASME B16.34
END STD.	: ASME B16.5
RATING STD.	: ASME B16.34
TESTING STD.	: API 598
DIMENSIONAL STD.	: ASME B16.10

*

TAG NUMBER: VB1I01

Commodity Code Valve Summary

Revised Date: 28-JAN-16

Commodity Code

VFATA3S1LLBDALFH

Valve, Butterfly, CL 150, Lug Tapped RF, A351 CF8M, lever TAG NUMBER: VF1I01

Valve, Butterfly, Lug Type, Class 150, Lug type with tapped holes to fit between raised face flanges, ASTM A351 CF8M, 316 SS - Bi-directional and suitable for bubble tight dead end service, Lever operator, 316 SS EPDM BUNA-N, ASME B16.34, Manufacturers standard, ASME B16.5, Manufacturers standard, API 598

TYPE : Butterfly, Lug Type
RATING : Class 150
ENDS : Lug type with tapped holes to fit between raised face flanges
SCHEDULE : -
BODY MATL : ASTM A351 CF8M
OPERATOR : Lever operator
PORT : -
CONFIGURATION : -
DISC : 316 SS
SEAT : EPDM
STEM : 316 SS
BODY TYPE : -
STEM PACKING : BUNA-N
OPTIONS : Bi-directional and suitable for bubble tight dead end service

STANDARDS: : Conforming to
DESIGN STD. : ASME B16.34
END STD. : ASME B16.5
RATING STD. : Manufacturers standard
TESTING STD. : API 598
DIMENSIONAL STD. : Manufacturers standard

* TAG NUMBER: VF1I01

Commodity Code Valve Summary

Revised Date: 28-JAN-16

Commodity Code

VFATA3S1LGBDALFH

Valve, Butterfly, CL 150, Lug Tapped RF, A351 CF8M, GO w/side HW
TAG NUMBER: VF1I02

Valve, Butterfly, Lug Type, Class 150, Lug type with tapped holes to fit between raised face flanges, ASTM A351 CF8M, 316 SS - Bi-directional and suitable for bubble tight dead end service, Gear operator with side handwheel, 316 SS EPDM BUNA-N, ASME B16.34, Manufacturers standard, ASME B16.5, Manufacturers standard, API 598

TYPE	: Butterfly, Lug Type
RATING	: Class 150
ENDS	: Lug type with tapped holes to fit between raised face flanges
SCHEDULE	: -
BODY MATL	: ASTM A351 CF8M
OPERATOR	: Gear operator with side handwheel
PORT	: -
CONFIGURATION	: -
DISC	: 316 SS
SEAT	: EPDM
STEM	: 316 SS
BODY TYPE	: -
STEM PACKING	: BUNA-N
OPTIONS	: Bi-directional and suitable for bubble tight dead end service

STANDARDS:	: Conforming to
DESIGN STD.	: ASME B16.34
END STD.	: ASME B16.5
RATING STD.	: Manufacturers standard
TESTING STD.	: API 598
DIMENSIONAL STD.	: Manufacturers standard

* TAG NUMBER: VF1I02

Commodity Code Valve Summary

Revised Date: 14-JAN-16

Commodity Code

VCLDHSS2NBCBCSCV

Valve, Check, CL 800, SW, A182 F316/316L, Trim 10, Conv. port - TAG NUMBER: VC8I01

Valve, Check Lift, Socketweld Conventional Port, Class 800, Socketweld, ASTM A182 F316/316L, Piston lift, Conventional port, API trim 10, -, with spring, -, Bolted cover, -, Manufacturers standard, API 602, - - -,horizontal with cover up or vertical upward flow, API 602, API 602, ASME B16.11, Manufacturers standard, API 598

TYPE	: Check Lift, Socketweld Conventional Port
DESIGN	: Piston lift
RATING	: Class 800
ENDS	: Socketweld
SCHEDULE	: -
BODY / COVER MATL	: ASTM A182 F316/316L / -
COVER	: Bolted cover
API TRIM	: API trim 10
INSTALLATION	: horizontal with cover up or vertical upward flow
PORT	: Conventional port
DISC / SEAT	: - / -
GASKET	: API 602
BOLTING	: Manufacturers standard
HINGE PIN	: -
SPRINGS	: -
OPTIONS	: with spring
STANDARDS:	: Conforming to
DESIGN STD.	: API 602
END STD.	: ASME B16.11
RATING STD.	: API 602
TESTING STD.	: API 598
DIMENSIONAL STD.	: Manufacturers standard

* TAG NUMBER: VC8I01

Commodity Code Valve Summary

Revised Date: 18-OCT-13

Commodity Code

VCAAAAS1LB1MDZAA

Valve, Check, CL 150, RFFE, A351 CF8M, Trim 10, Conv. port - TAG NUMBER: VC1I02

Valve, Check, Swing, Flanged, Long Pattern, Class 150, Raised face flanged end, ASTM A351 CF8M, - Conventional port API trim 10 - - , Bolted cover, -, A193 B8M / A194 8M, ASME B16.34, - - -,horizontal with cover up or vertical upward flow, ASME B16.34, ASME B16.34, ASME B16.5, ASME B16.10, API 598

TYPE	: Check, Swing, Flanged, Long Pattern
DESIGN	: -
RATING	: Class 150
ENDS	: Raised face flanged end
SCHEDULE	: -
BODY / COVER MATL	: ASTM A351 CF8M / -
COVER	: Bolted cover
API TRIM	: API trim 10
INSTALLATION	: horizontal with cover up or vertical upward flow
PORT	: Conventional port
DISC / SEAT	: / -
GASKET	: ASME B16.34
BOLTING	: A193 B8M / A194 8M
HINGE PIN	: -
SPRINGS	: -
OPTIONS	: -
STANDARDS:	: Conforming to
DESIGN STD.	: ASME B16.34
END STD.	: ASME B16.5
RATING STD.	: ASME B16.34
TESTING STD.	: API 598
DIMENSIONAL STD.	: ASME B16.10

* TAG NUMBER: VC1I02

Commodity Code Valve Summary

Revised Date: 14-JAN-16

Commodity Code	
VUAD8UM3HRAGGCGH	Valve, Gauge, 5000 PSI, PE X FTE, A479 Gr 316L, T-handle short, one SS bleed valve & two 0.5" SS hex plugs, 3 FTE ports TAG NUMBER: VUHI01

Valve, Gauge, Male Welded End x Multi Female Threaded End, Reducing, 5000 PSI, Male plain end x female threaded end, ASTM A479 Grade 316L, one SS bleed valve & two 0.5" SS hex plugs, 3 Female threaded ports, Short T-handle operator, Outside Screw & Yoke, 316SS, corrosion-inhibited die-formed flexible graphite w/ anti-extrusion rings, Integral Seat, MSS SP-105, ASME B16.34, ASME B1.20.1, Manufacturers standard, MSS SP-61

TYPE : Gauge, Male Welded End x Multi Female Threaded End, Reducing
RATING : 5000 PSI
ENDS : Male plain end x female threaded end
BODY MATL : ASTM A479 Grade 316L
API TRIM :
OPERATOR : Short T-handle operator
PORT :
CONFIGURATION : Outside Screw & Yoke
BONNET TYPE :
SEAT : Integral Seat
STEM : 316SS
STEM PACKING : corrosion-inhibited die-formed flexible graphite w/ anti-extrusion rings
OPTIONS : one SS bleed valve & two 0.5" SS hex plugs 3 Female threaded ports

STANDARDS: : Conforming to
DESIGN STD. : MSS SP-105
END STD. : ASME B1.20.1
RATING STD. : ASME B16.34
TESTING STD. : MSS SP-61
DIMENSIONAL STD. : Manufacturers standard

* TAG NUMBER: VUHI01

Commodity Code Valve Summary

Revised Date: 18-OCT-13

Commodity Code

VLAAAAS1LABSDTAA

Valve, Globe, CL 150, RFFE, A351 CF8M, Trim 10, HW, Reg port - TAG NUMBER: VL1I02

Valve, Globe, Flanged Ends, Long pattern, Class 150, Raised face flanged end, ASTM A351 CF8M, T-Body, Regular port, API trim 10, - - -, Handwheel operator, Bolted bonnet, -, A193 B8M / A194 8M, ASME B16.34, Outside Screw & Yoke, -, corrosion-inhibited die-formed flexible graphite w/ anti-extrusion rings -, ASME B16.34, ASME B16.34, ASME B16.5, ASME B16.10, API 598

TYPE	: Globe, Flanged Ends, Long pattern
RATING	: Class 150
ENDS	: Raised face flanged end
SCHEDULE	: -
BODY / BONNET MATL	: ASTM A351 CF8M / -
CLOSURE	: -
DISC / PLUG MATL	:
API TRIM	: API trim 10
OPERATOR	: Handwheel operator
PORT	: Regular port
CONFIGURATION	: Outside Screw & Yoke
BONNET TYPE	: Bolted bonnet
SEAT	: -
STEM	: -
STEM PACKING	: corrosion-inhibited die-formed flexible graphite w/ anti-extrusion rings
BONNET BOLTING	: A193 B8M / A194 8M
BONNET GASKET	: ASME B16.34
OPTIONS	: -
STANDARDS:	: Conforming to
DESIGN STD.	: ASME B16.34
END STD.	: ASME B16.5
RATING STD.	: ASME B16.34
TESTING STD.	: API 598
DIMENSIONAL STD.	: ASME B16.10

* TAG NUMBER: VL1I02

Commodity Code Valve Summary

Revised Date: 23-DEC-15

Commodity Code

VLDDHSS2NABRESCV

Valve, Globe, CL 800, SW, A182 F316/316L, Trim 10, HW, Reg port - TAG NUMBER: VL8I02

Valve, Globe, Socketweld, Regular Port, Class 800, Socketweld, ASTM A182 F316/316L, T-Body, Regular port, API trim 10, - - Plug Type, Handwheel operator, Bolted bonnet, - , A320 B8 / A194 Gr. 8, API 602, Outside Screw & Yoke, -, corrosion-inhibited die-formed flexible graphite w/ anti-extrusion rings, -, API 602, API 602, ASME B16.11, Manufacturers standard, API 598

TYPE	: Globe, Socketweld, Regular Port
RATING	: Class 800
ENDS	: Socketweld
SCHEDULE	: -
BODY / BONNET MATL	: ASTM A182 F316/316L / -
CLOSURE	: Plug Type
DISC / PLUG MATL	:
API TRIM	: API trim 10
OPERATOR	: Handwheel operator
PORT	: Regular port
CONFIGURATION	: Outside Screw & Yoke
BONNET TYPE	: Bolted bonnet
SEAT	: -
STEM	: -
STEM PACKING	: corrosion-inhibited die-formed flexible graphite w/ anti-extrusion rings
BONNET BOLTING	: A320 B8 / A194 Gr. 8
BONNET GASKET	: API 602
OPTIONS	: -
STANDARDS:	: Conforming to
DESIGN STD.	: API 602
END STD.	: ASME B16.11
RATING STD.	: API 602
TESTING STD.	: API 598
DIMENSIONAL STD.	: Manufacturers standard

* TAG NUMBER: VL8I02

Commodity Code Valve Summary

Revised Date: 18-JAN-16

Commodity Code	
VBFG7WS1GLAVAQCG	Valve, Ball, 1000 PSI CWP, SW x FTE, A351 CF3M, lever, Full port- TAG NUMBER: VBDI02

Valve, Ball, Socketweld X Female, Threaded Ends, Full Port, 1000 PSI CWP, Socketweld x female threaded end,ASTM A351 CF3M, Floating ball, Three-piece, Full port, -, Antistatic design, Lever operator, 316SS, 316SS, RTFE, PTFE, Manufacturers standard, ASME B16.34 ASME B16.34 ASME B16.11 / ASME B1.20.1 Manufacturers standard API 598

TYPE	: Ball, Socketweld X Female, Threaded Ends, Full Port
RATING	: 1000 PSI CWP
PRESS/TEMP LIMITS	:
ENDS	: Socketweld x female threaded end
SCHEDULE	: -
BODY	: ASTM A351 CF3M
OPERATOR	: Lever operator
PORT	: Full port
CONFIGURATION	: Floating ball-Three-piece
BALL MATL	: 316SS
SEAT	: RTFE
STEM	: 316SS
SEAL	: PTFE
BOLTING	: Manufacturers standard
OPTIONS	: Antistatic design
STANDARDS:	: Conforming to
DESIGN STD.	: ASME B16.34
END STD.	: ASME B16.11 / ASME B1.20.1
RATING STD.	: ASME B16.34
TESTING STD.	: API 598
DIMENSIONAL STD.	: Manufacturers standard

*

TAG NUMBER: VBDI02

Material Specification P10

CL125, Under Ground PVC w/Cement Lined D.I. Fittings - FPBG

Prepared For: WRPS

Project: 31269 - Low Activity Waste Pretreatment System (LAWPS)

AECOM ATKINS AREVA

CORROSION ALLOWANCE	0.000 in.	DESIGN CODE	ASME B31.3/NFPA 24
EXAMINATION	Visual/ NFPA24	MATERIAL	PVC
RATING CLASS	See Rating Table	STRESS RELIEF	Not Req'd
TEMPERATURE LIMIT	32F to 80F		

PRESSURE - TEMPERATURE RATINGS

Temp F	32	73	80
Temp C	0	23	27

psig	150	150	132
kPag	1035	1035	910

SPECIFICATION NOTES:
09, 19, 20, 25

NOTE: Shaded rows are items that have been changed or added since last revision

ITEM	Notes	Rev	NPS1 / NPS2	Sch / Rat	Commodity Code	Opt	Description
PIPE	20, 25		4" - 12" -	DR 18	PPPSG0PVAYAA	1	Pipe, PVC, D1784, CL 12454, AWWA-C900, MJ Bell x MJ Spigot, 20 ft. lay length, UL/FM Approved.
PIPE	20, 25		4" - 12" -	DR 18	PPPSG0PVADAA	2510	Pipe, PVC, D1784, CL 12454, AWWA-C900, MJ Spigot, 20 ft. lay length, UL/FM Approved,
ADAPTER			4" - 12"	350 psi	P1ADPUAQDI5A	1	Adapter, ANSI/AWWA C110/A21.10, RJBLE, 350 psi, A536 DI, cement-mortar lining, w/ asphaltic C, acc. to AWWA C104, UL/FM Approved
ADAPTER	19		4" - 12"	CL 125	P1ADPUNHDI5A	703	Adapter, ANSI/AWWA C110/A21.10, FLG x Spigot, CL 125, A536 DI, cement-mortar lining, w/ asphaltic C, acc. to AWWA C104, UL/FM Approved
ADAPTER	19		4" - 12"	CL 125	P1ADPUJHDI5A	701	Adapter, ANSI/AWWA C110/A21.10, FLG x RJBLE, CL 125, A536 DI, cement-mortar lining, w/ asphaltic C, acc. to AWWA C104, UL/FM Approved
E11			4" - 12"	350 psi	P1E11SAQDI5A	1	Ell 11.25 Deg, ANSI/AWWA C153/A21.53, RJBLE, 350 psi, A536 DI, cement-mortar lining, w/ asphaltic C, acc. to AWWA C104, UL/FM Approved
E22			4" - 12"	350 psi	P1E22SAQDI5A	1	Ell 22.5 Deg, ANSI/AWWA C153/A21.53, RJBLE, 350 psi, A5 DI, cement-mortar lining, w/ asphaltic C, acc. to AWWA C104, UL/FM Approved
E45			4" - 12"	350 psi	P1E45SAQDI5A	1	Ell 45 Deg, ANSI/AWWA C153/A21.53, RJBLE, 350 psi, A536 DI, cement-mortar lining, w/ asphaltic C, acc. to AWWA C104, UL/FM Approved
E90			4" - 12"	350 psi	P1E90SAQDI5A	1	Ell 90 Deg, ANSI/AWWA C153/A21.53, RJBLE, 350 psi, A536 DI, cement-mortar lining, w/ asphaltic C, acc. to AWWA C104, UL/FM Approved
TEE			4" - 12"	350 psi	P1TEESAQDI5A	1	Tee, ANSI/AWWA C153/A21.53, RJBLE, 350 psi, A536 DI, cement-mortar lining, w/ asphaltic C, acc. to AWWA C104, UL/FM Approved
REDC			6" - 12" 4" - 10"	350 psi	P1RECSAQDI5A	1	Conc Red, ANSI/AWWA C153/A21.53, RJBLE, 350 psi, A536 DI, cement-mortar lining, w/ asphaltic C, acc. to AWWA C104, UL/FM Approved
TRB			6" - 12" 4" - 10"	350 psi	P1TRBSAQDI5A	1	Red Tee, ANSI/AWWA C153/A21.53, RJBLE, 350 psi, A536 DI, cement-mortar lining, w/ asphaltic C, acc. to AWWA C104, UL/FM Approved
GAT			4" - 12"	250 PSI	VGAMYIDI5WBRCOBM	1	Valve, Gate, 250 PSI, RJBLE, A536 DI., post indicator valve adaptor plate, TAG NUMBER: VG2S01
GASO-1	09		4" - 12"	CL 150	PGFFABBRRAA1	1	Gasket, full face, FFFE, red rubber D1330, B16.5, 1/8" thick, CL 150, durometer 80 ASME B16.21 & B16.1
BLTG			4" - 12"		PTM1100A3B00	1	Machine blt, hvy hex, A307-B with A563-A nuts, B18.2.1/B18.2.2.
CLMP			4" - 12"		PMPPRGRDI5AA	1	Pipe Restraint, pipe-to-pipe bell harness, AWWA-C900, A536 DI, FM Approved, rods and hex nuts per ANSI/AWWA C111/A21.11, Star Pipe Products Series 1100G2C
CLMP			4" - 12"		PMMJRSMDI5AB	2620	MJ Restraint, MJ bell x PVC pipe, ANSI/AWWA C153/A21.53, A536 DI, UL/ FM Approved, gasket bolts and hex nuts per ANSI/AWWA C111/A21.11, Star Pipe Products Series 4000

)0° Degree BRANCH CONNECTION
Legend and chart

BRANCH					
12	TEE				
10	TRB	TEE			
8	TRB	TRB	TEE		
6	TRB	TRB	TRB	TEE	
4	TRB	TRB	TRB	TRB	TEE
	12	10	8	6	4

HEADER

TRB	Red Tee
TEE	Tee

SPECIFICATION NOTES:

09	Use full face gaskets with flat face flanges only.
19	Flanged joints shall be used underground only if absolutely necessary.
20	A mechanical joint restraint is required for each spigot end PVC pipe to mechanical joint (MJ) fitting and appurtenance connection.
25	A pipe restraint is required for each pipe-to-pipe PVC bell joint connection.

GENERAL NOTES:

G07	All buried metallic components shall be protected from corrosion by coating, cathodic protection or other acceptable means.

Commodity Code Valve Summary

Revised Date: 05-JAN-16

Commodity Code

VGAMYIDI5WBRCOBM

Valve, Gate, 250 PSI, RJBLE, A536 DI, -, post indicator valve adaptor plate, - - TAG NUMBER: VG2S01

Valve, Gate, Mechanical Joint, Long Pattern, 250 PSI, Restrained joint bell end (with restraining ears), ASTM A536 ductile iron, Resilient wedge, in accordance with ANSI/NSF Standard 61, fusion bonded epoxy coated inside and out per AWWA C550, Rubber Encapsulated for 100% Bubble Tight Closure, post indicator valve adaptor plate, Bolted bonnet, -, Manufacturers standard, Nitrile Rubber, Non Rising Stem, NDZ Low Zinc, - -, AWWA C515 UL listed/FM approved ANSI/AWWA C111/A21.11 Manufacturers standard UL listed/FM approved

TYPE : Gate, Mechanical Joint, Long Pattern
RATING : 250 PSI
ENDS : Restrained joint bell end (with restraining ears)
SCHEDULE : -
BODY / BONNET MATL : ASTM A536 ductile iron / -
WEDGE TYPE : Resilient wedge
WEDGE MATERIAL : Rubber Encapsulated for 100% Bubble Tight Closure
API TRIM : -
OPERATOR : post indicator valve adaptor plate
PORT : -
CONFIGURATION : Non Rising Stem
BONNET TYPE : Bolted bonnet
SEAT : -
STEM : NDZ Low Zinc
STEM PACKING : -
BONNET BOLTING : Manufacturers standard
BONNET GASKET : Nitrile Rubber
OPTIONS : in accordance with ANSI/NSF Standard 61, fusion bonded epoxy coated inside and out per AWWA C550,

STANDARDS: : Conforming to
DESIGN STD. : AWWA C515
END STD. : ANSI/AWWA C111/A21.11
RATING STD. : UL listed/FM approved
TESTING STD. : UL listed/FM approved
DIMENSIONAL STD. : Manufacturers standard

* TAG NUMBER: VG2S01

Material Specification P12

Class 300 Stainless Steel – Lag Tank Vent Sample System, Combustible Gas Monitors, IA Pneumatic Lines

Prepared For: WRPS

Project: 31269 - Low Activity Waste Pretreatment System (LAWPS)

AECOM ATKINS AREVA

CORROSION ALLOWANCE	0.0in	DESIGN CODE	ASME B31.3
EXAMINATION	Per ASME B31.3	MATERIAL	316L SS
RATING CLASS	CL300, ASME B16.5	STRESS RELIEF	Not Req'd
TEMPERATURE LIMIT	-20F to 200F		

PRESSURE - TEMPERATURE RATINGS

Temp F	-20	100	200
Temp C	-29	38	93

psig	400	400	400
kPag	2760	2760	2760

SPECIFICATION NOTES:
44

NOTE: Shaded rows are items that have been changed or added since last revision

ITEM	Notes	Rev	NPS1 / NPS2	Sch / Rat	Description
TUBE			1/4" – 3/8" -	0.035	Tube, smls, A269-TP 316L, Annealed
TUBE			1/2" -	0.049	Tube, smls, A269-TP 316L, Annealed
ADAPTER			1/2"	-	Connecter, Tube BE X Pipe BE, A182 / A276 316L, In acc. w/ project design code
CAPBV			1/4" – 1/2"	-	Cap, Tube BE, A182 / A276 316L, In acc. w/ project design code
CROSS			1/4" – 1/2"	-	Union cross, Tube BE, A182 / A276 316L, In acc. w/ project design code
E90			1/4" – 1/2"	-	90 D union elbow, Tube BE, A182 / A276 316L, In acc. w/ project design code
TEE			1/4" – 1/2"	-	Union tee, Tube BE, A182 / A276 316L, In acc. w/ project design code
UN			1/4" – 1/2"	-	Union, Tube BE, A182 / A276 316L, In acc. w/ project design code
PLUG			1/4" – 1/2"	-	Plug, Tube BE, A182 / A276 316L, In acc. w/ project design code
CROSSRED			3/8" – 1/2" 1/4" – 3/8"	-	Union cross red, Tube BE, A182 / A276 316L, In acc. w/ project design code
REDC			3/8" – 1/2" 1/4" – 3/8"	-	Conc red union, Tube BE, A182 / A276 316L, In acc. w/ project design code
REDE			3/8" – 1/2" 1/4" – 3/8"	-	Ecc red union, Tube BE, A182 / A276 316L, In acc. w/ project design code
TRB			3/8" – 1/2" 1/4" – 3/8"	-	Union tee red, Tube BE, A182 / A276 316L, In acc. w/ project design code
CKL			1/4" – 3/8"	3000 psig	Valve, Check, Poppet, 3000 psig CWP, Tube BW, A479 316L, 316SS / FKM trim, TAG NUMBER: VCFI011
CKL			1/2"	3000 psig	Valve, Check, Poppet, 3000 psig CWP, Tube BW, A479 316L, 316SS / FKM trim, TAG NUMBER: VCFI021
BALL			1/4" – 3/8"	3000 psig	Valve, Ball, 3000 psig CWP, Tube BW, A479 316L, lever, Reg Port- TAG NUMBER: VBFI011
BALL			1/2"	3000 psig	Valve, Ball, 3000 psig CWP, Tube BW, A479 316L, lever, Reg Port- TAG NUMBER: VBFI021

90° Degree BRANCH CONNECTION
Legend and chart

BRANCH \ HEADER	1/2	3/8	1/4
1/2	TEE		
3/8	TRB	TEE	
1/4	TRB	TRB	TEE

TEE	Union Tee, Tube BW
TRB	Union Tee Red, Tube BW

SPECIFICATION NOTES:

44 All buttweld component thicknesses shall match the tube thickness

GENERAL NOTES:

Commodity Code Valve Summary

Revised Date: 18-JUL-16

Valve, Check, Poppet, 3000 psig CWP, Tube BW, A479 316L, 316SS / FKM trim, TAG NUMBER: VCFI011

Valve, Check, Poppet, 3000 psig CWP, Tube Butt Weld ends, 0.035" , ASTM A479 316L SS, All-Welded, - , horizontal with cover up or vertical upward flow, Conventional port, 316 SS / fluorocarbon FKM, Manufacturers standard, Manufacturers standard, Manufacturers standard, ASME B16.34, Manufacturers standard

TYPE	: Check Poppet Conventional port
DESIGN	: Poppet
RATING	: 3000 psig CWP
ENDS	: Tube Butt Weld ends
SCHEDULE	: 0.035"
BODY / BONNET MATL	: ASTM A479 316L SS / -
COVER	: All-Welded
API TRIM	: -
INSTALLATION	: horizontal with cover up or vertical upward flow
PORT	: Conventional port
DISC / SEAT	: 316 SS / Fluorocarbon FKM
GASKET	: -
BOLTING	: -
HINGE PIN	: -
SPRINGS	: -
OPTIONS	: -
STANDARDS:	Conforming to:
DESIGN STD.	: Manufacturers standard
END STD.	: Manufacturers standard
RATING STD.	: Manufacturers standard
TESTING STD.	: ASME B16.34
DIMENSIONAL STD.	: Manufacturers standard
* TAG NUMBER	: VCFI011

Commodity Code Valve Summary

Revised Date: 13-SEPT-16

Valve, Check, Poppet, 3000 psig CWP, Tube BW, A479 316L, 316SS / FKM trim, TAG NUMBER: VCFI021

Valve, Check, Poppet, 3000 psig CWP, Tube Butt Weld ends, 0.049" , ASTM A479 316L SS, All-Welded, - , horizontal with cover up or vertical upward flow, Conventional port, 316 SS / fluorocarbon FKM, Manufacturers standard, Manufacturers standard, Manufacturers standard, ASME B16.34, Manufacturers standard

TYPE	Conventional port
DESIGN	: Poppet
RATING	: 3000 psig CWP
ENDS	: Tube Butt Weld ends
SCHEDULE	: 0.049"
BODY / BONNET MATL	: ASTM A479 316L SS / -
COVER	: All-Welded
API TRIM	: -
INSTALLATION	: horizontal with cover up or vertical upward flow
PORT	: Conventional port
DISC / SEAT	: 316 SS / Fluorocarbon FKM
GASKET	: -
BOLTING	: -
HINGE PIN	: -
SPRINGS	: -
OPTIONS	: -
STANDARDS:	Conforming to:
DESIGN STD.	: Manufacturers standard
END STD.	: Manufacturers standard
RATING STD.	: Manufacturers standard
TESTING STD.	: ASME B16.34
DIMENSIONAL STD.	: Manufacturers standard
* TAG NUMBER	: VCFI021

Commodity Code Valve Summary

Revised Date: 18-JUL-16

Valve, Ball, 3000 psig CWP, Tube BW, A479 316L, lever, Reg Port- TAG NUMBER: VBFI011

Valve, Ball, 3000 psig CWP, Tube Butt Weld ends, 0.035" , ASTM A479 316L SS, Lever operator, Regular Port, Floating ball - One-piece, 316SS, PTFE, 316SS, PTFE, Manufacturers standard, Manufacturers standard, Manufacturers standard, ASME B16.34, Manufacturers standard

TYPE	: Ball, Tube Butt Weld
RATING	: 3000 psig CWP
ENDS	: Tube Butt Weld ends
SCHEDULE	: 0.035"
BODY / BONNET MATL	: ASTM A479 316L SS / -
OPERATOR	: Lever operator
PORT	: Regular Port
CONFIGURATION	: Floating ball - One-piece
BALL MATL	: 316SS
SEAT	: PTFE
STEM	: 316SS
SEAL	: PTFE
HINGE PIN	: -
BOLTING	: -
OPTIONS	: -

STANDARDS:	Conforming to:
DESIGN STD.	: Manufacturers standard
END STD.	: Manufacturers standard
RATING STD.	: Manufacturers standard
TESTING STD.	: ASME B16.34
DIMENSIONAL STD.	: Manufacturers standard

* TAG NUMBER : VBFI011

Commodity Code Valve Summary

Revised Date: 13-SEPT-16

Valve, Ball, 3000 psig CWP, Tube BW, A479 316L, lever, Reg Port- TAG NUMBER: VBFI021

Valve, Ball, 3000 psig CWP, Tube Butt Weld ends, 0.049" , ASTM A479 316L SS, Lever operator, Regular Port, Floating ball - One-piece, 316SS, PTFE, 316SS, PTFE, Manufacturers standard, Manufacturers standard, Manufacturers standard, ASME B16.34, Manufacturers standard

TYPE	: Ball, Tube Butt Weld
RATING	: 3000 psig CWP
ENDS	: Tube Butt Weld ends
SCHEDULE	: 0.049"
BODY / BONNET MATL	: ASTM A479 316L SS / -
OPERATOR	: Lever operator
PORT	: Regular Port
CONFIGURATION	: Floating ball - One-piece
BALL MATL	: 316SS
SEAT	: PTFE
STEM	: 316SS
SEAL	: PTFE
HINGE PIN	: -
BOLTING	: -
OPTIONS	: -

STANDARDS:	Conforming to:
DESIGN STD.	: Manufacturers standard
END STD.	: Manufacturers standard
RATING STD.	: Manufacturers standard
TESTING STD.	: ASME B16.34
DIMENSIONAL STD.	: Manufacturers standard

* TAG NUMBER : VBFI021

SPECIFICATION

16-2-002

PIPING VALVES SPECIFICATION

AECOM ATKINS AREVA

LOW ACTIVITY WASTE PRETREATMENT SYSTEM

Project No. 31269 (T5L01)

Document No. 16-2-002

CSI Section 40 05 51

Safety Related ☒ Non-Safety Related ☐

PIPING VALVES SPECIFICATION

Prepared for

Washington River Protection Solutions, LLC

Revision: 0 Status: Final

MATTHEW SEAN JEND
STATE OF WASHINGTON
54709
REGISTERED
PROFESSIONAL ENGINEER

5/17/17

FOR PERMITTING
5/17/17

REVISION PAGE

Project Name:	LAWPS	Discipline:	Piping
Client:	Washington River Protection Solutions	Project Number: 31269 (T5L01)	
		Latest Revision: 0	

REVISION SIGNATURES

R. Bailey (Guidance for R.E.B)	5/15/17	M. Jand	5/17/17
Prepared by	Date	Approved by (SDE/Lead)	Date
J. Jackson	5/15/17	P. Bell	5/17/17
Checked by	Date	Approved by (QA) For P.P.	Date
M. Quintana	05/15/2017	D. Priebe	5/17/17
Verified by (if required)	Date	Approved by (PEM)	Date

Status	Rev. No.	Date	Prepared By	Pages	Description of Changes
Final	0	5/17/17	R. Bailey	27	Approved for Construction

Safety Related Yes ☒ No ☐	Quality Level Full QA ☒ Enhanced QA ☐ Commercial QA ☐

TABLE OF CONTENTS

1.0 PART 1 – GENERAL 1

1.1 Section Scope 1
1.2 Related Sections 2
1.3 Codes and Standards 2
1.4 System Descriptions 5
1.5 Submittals 5
1.6 Delivery, Storage & Handling 7
1.7 Quality Assurance 8
1.8 Site Conditions 10

2.0 PART 2 - PRODUCT 11

2.1 Manufacturers 11
2.2 Materials 11
2.3 Equipment 14
2.4 Components 14
2.5 Fabrication 15
2.6 Shop Quality Control 16

3.0 PART 3 - EXECUTION 18

3.1 Preparation 18
3.2 Erection, Installation & Application 18
3.3 Field Quality Control 18
3.4 Adjusting and Cleaning 18
3.5 Demonstration 18
3.6 Protection 18

4.0 LIST OF APPENDICES 19

4.1 Appendix A - Supporting Document(s) Issued With This Specification 19

LIST OF TERMS

Abbreviations and Acronyms

Term	Definition
API	American Petroleum Institute
ASME	American Society of Mechanical Engineers
ASNT	American Society for Nondestructive Testing
ASTM	ASTM International
BPVC	Boiler & Pressure Vessel Code
CCW	Counter Clockwise
CGD	Commercial Grade Dedication
CQA	Commercial Quality Assurance
CoC	Certificate of Compliance
CMTR	Certified Material Test Report
CW	Clockwise
CWI	Certified Weld Inspector
CWP	Cold Working Pressure
EQA	Enhanced Quality Assurance
FQA	Full Quality Assurance
IOM	Installation and Operation Manuals
LAWPS	Low Activity Waste Pretreatment System
MSS	Manufacturers Standardization Society of the Valve and Fittings Industry, Inc.
NCR	Nonconformance Report
NDE	Nondestructive Examination
OS&Y	Outside Screw and Yoke
PFI	Pipe Fabrication Institute
PMI	Positive Material Identification
PPM	Parts Per Million
PQR	Procedure Qualification Record
PSSH	Packaging, Storage, Shipping and Handling
PT	Liquid Penetrant Testing
RFI	Request for Information
RT	Radiographic Testing
VT	Visual Examination

Term	Definition
WPS	Welding Procedure Specification

Units

deg	Degree
in	Inch
lbs	Pounds
ppm	Parts Per Million

Definitions

BUYER – The company for whom the VENDOR is performing work or services.

COMMERCIAL QUALITY ASSURANCE (CQA) – Level of controls for those items, services, or processes where, based on an evaluation of risk or nuclear safety, no additional quality controls beyond the provider's published or stated attributes of the item, service, or process is required.

DESIGN CHANGE – Within the context of this specification, a DESIGN CHANGE is technically equivalent to a SUBSTITUTION (see SUBSTITUTION). However, the term DESIGN CHANGE may be used to refer to more significant changes to the design compared to a simple substitution.

DEVIATION – Any departure from the requirements contained in the purchase order and specification which VENDOR proposes to incorporate if approved by BUYER.

ENHANCED QUALITY ASSURANCE (EQA) – Level of controls for those items, services, or processes where, based on an evaluation of risk or nuclear safety, additional controls beyond the provider's published or stated attributes of the item, service, or process are needed to verify critical attributes.

FULL QUALITY ASSURANCE (FQA) – Level of controls applied for items services, or processes that are commensurate with the controls invoked under ASME NQA-1 or other appropriate national consensus standard.

HANDLING – The movement or transportation of items following receipt from offsite / project locations. This includes movement within storage areas and movement / transportation from receipt or storage areas to field locations. Handling requirements include the need for special handling tools and equipment, restrictions on material composition of surfaces in contact with the item, protection against damage or deterioration, which could occur during movement and placement, protection against physical damage due to excessive shock or vibration, and protection against entry of dirt, water, or other contaminants.

HOLD POINT - A mandatory inspection activity beyond which work shall not proceed until (1) the inspection is performed by an independent inspector and/or BUYER and acceptance is authenticated, or (2) a written release is authorized by the organization who established the hold point.

MANUFACTURER – The party responsible for making the metallic piping.

MORE CONSERVATIVE - "More conservative" shall be interpreted as "more protective of the health, safety and well-being of Site workers and facilities, the public, and environment, as applicable."

NONCONFORMANCE – A deficiency in characteristic, documentation, or procedure that renders the quality of an item or activity unacceptable or indeterminate.

PRESSURE-CONTAINING COMPONENTS – Items that form the pressure-containing envelope of the piping system.

PROCUREMENT QUALITY CLAUSES (QA CLAUSES) - Procurement quality clauses are to be used for the acquisition of items and services. The clauses establish contractual obligations for quality program systems, identification, traceability, documents submittals, testing, reporting, qualification, special process controls, inspections, etc.

PRODUCT DATA - Printed information including, but not limited to, catalog cuts, color charts, illustrations, diagrams, templates, performance curves, brochures, and other forms of Product literature.

QUALITY ASSURANCE RECORDS – Quality assurance plans, procedures, and records, including completed documents that furnish evidence of the quality of an item or activities affecting quality.

SHALL / MUST – Denotes project requirements, compliance is required.

SHIPPING – The movement of items from an off-site/project location (VENDOR, warehouse, etc.) to an on-site/project location, or movement from an onsite/project location to an off-site/project location. Shipping requirements include packaging and securing of items to protect against damage or deterioration which could occur during movement and transportation, protection against physical damage due to excessive shock or vibration, protection against entry of dirt, water, or other contaminants, and protection against other environmental conditions such as temperature or humidity.

SUBSTITUTION – Any change or deviation from issued approved drawings, designs, methods, or contract terms and conditions. Changes in products, materials, equipment, methods of construction, and test criteria required by the Contract Documents proposed by the VENDOR after award of the Contract are considered to be requests for substitution.

STORAGE – Holding of items in areas that address: the probable maximum period to be held, the inherent physical limitations of the item itself, and required protection from potential hazards such as fire, corrosion, chemical attack and environmental conditions. Storage also includes the requirements for maintaining the integrity and operability of items through routine maintenance, cleaning, or other means of preservation.

SPECIFICATION – Refers to any design, fabrication or supply specification.

VENDOR – The Company responsible for the supply of equipment or services.

WITNESS POINT - An inspection activity beyond which work shall not proceed until an inspector and/or BUYER is notified and (1) the inspection is performed and released, or (2) the inspection is deferred and can be completed at a later time, or (3) a written waiver is issued by the organization who established the witness point.

1.0 PART 1 – GENERAL

1.1 Section Scope

1.1.1 This specification establishes the minimum requirements for the procurement of manually operated Valves; including, but not limited to Ball, Gate, Globe, Plug and Check Valves as specified in the purchase order and/or shown on contract drawings in conjunction with CSI Section 40 05 00.11 "Piping Materials Specification". The scope of the services identified in this specification encompasses safety and non-safety related piping systems shown on the drawings or otherwise specified.

1.1.2 This specification does not address Safety Relief Valves. See CSI Section 40 91 00 "Control Valve Specification."

1.1.3 This specification does not address remotely maintained valve designs for specialty applications. See Document No. 15-2-022 "Specialty Valve and Instrument Procurement Specification."

1.1.4 It is not the BUYER'S intent to specify all technical requirements or to set forth those requirements adequately covered by applicable codes and standards.

1.1.5 In case of a conflict between the purchase order and this specification and its references, the order of precedence is as follows:

1.1.5.1 Requirements of the purchase order

1.1.5.2 This specification

1.1.5.3 References in this specification

1.1.6 The BUYER shall be advised immediately in writing of any conflicts as soon as they are identified.

1.1.7 No substitutes or deviations shall be made to this specification without written approval from the BUYER. All substitutions shall be per CSI Section 01 25 00 "Substitutions and Design Changes."

1.2 Related Sections

01 25 00	Substitutions and Design Changes
01 33 00	Submittals
01 40 00	Quality Assurance
01 60 00	Labeling
01 66 00	Delivery Storage and Handling
40 05 00.11	Piping Materials Specification
15-2-022	Specialty Valve and Instrument Procurement Specification
40 91 00	Control Valve Specification

1.3 Codes and Standards

1.3.1 Work shall be performed in accordance with the referenced codes, standards and documents for this specification.

1.3.2 The following codes and standards, of the exact issue shown, form part of the BUYER basis of design to the extent specified in the applicable sections of this document. In the event of a conflict between documents referenced herein and the requirements of this specification, the requirements of this specification shall take precedence only when this specification's requirements are more stringent or conservative. If a code or standard not listed below is to be applied to the scope (see Section 1.1), apply the latest code or standard as of April 16, 2015.

1.3.3 Government Documents

N/A

1.3.4 Non-Government Documents

1.3.4.1 American Petroleum Institute (API)

A. API 594 (2010); *Check Valves: Flanged, Lug, Wafer, and Butt-welding*
B. API 598 (2009); *Valve Inspection and Testing*
C. API 599 (2013); *Metal Plug Valves - Flanged, Threaded and Welding Ends*
D. API 600 (2009); *Steel Gate Valves – Flanged and Butt-welding Ends, Bolted Bonnets*
E. API 602 (2009); *Steel Gate, Globe and Check Valves for Sizes (DN100 and Smaller for the Petroleum and Natural Gas Industries*
F. API 608 (2012); *Metal Ball Valves – Flanged, Threaded and Welding Ends*

1.3.4.2 American Society of Mechanical Engineers (ASME)

A. ASME B1.20.1 (2013); *Pipe Threads, General Purpose (Inch)*

B. ASME B16.1 (2010); *Gray Iron Pipe Flanges and Flanged Fittings Classes 25, 125,and 250*
C. ASME B16.5 (2013); *Pipe Flanges and Flanged Fittings - NPS 1/2 Through NPS 24 - Metric/Inch Standard*
D. ASME B16.10 (2009); *Face-to-Face and End-to-End Dimensions of Valves*
E. ASME B16.11 (2011); *Forged Fittings, Socket-Welding and Threaded*
F. ASME B16.20 (2012); *Metallic Gaskets For Pipe Flanges - Ring-Joint, Spiral-Wound, and Jacketed*
G. ASME B16.21 (2011); *Nonmetallic Flat Gaskets for Pipe Flanges*
H. ASME B16.25 (2012); *Buttwelding Ends*
I. ASME B16.34 (2013); *Valves - Flanged, Threaded, and Welding End*
J. ASME B16.47 (2011); *Large Diameter Steel Flanges - NPS 26 Through NPS 60 - Metric/Inch Standard*
K. ASME B18.2.1 (2012); *Square, Hex, Heavy Hex, and Askew Head Bolts and Hex, Heavy Hex, Hex Flange, Lobed Head, and Lag Screws (Inch Series) (Errata 2013)*
L. ASME B18.2.2 (2010); *Nuts for General Applications: Machine Screw Nuts, Hex, Square, Hex Flange, and Coupling Nuts (Inch Series)*
M. ASME B31.3 (2012); *Process Piping, American Society of Mechanical Engineers*
N. ASME B36.10M (2004); *Welded and Seamless Wrought Steel Pipe (Reapproved 2010)*
O. ASME B36.19M (2004); *Stainless Steel Pipe (Reapproved 2010)*
P. ASME BPVC, Section IX (2013); *Welding, Brazing, and Fusing Qualifications: Qualification Standard for Welding, Brazing, and Fusing Procedures; Welders; Brazers; and Welding, Brazing, and Fusing Operators*
Q. ASME NQA-1 (2008); *Quality Assurance Requirements for Nuclear Facility Applications, American Society of Mechanical Engineers (2008/2009 Addenda)*

1.3.4.3 American Society for Nondestructive Testing (ASNT)

A. ASNT SNT-TC-1A (2011); *Recommended Practice for Personal Qualification and Certification in Nondestructive Testing*

1.3.4.4 ASTM International (ASTM)

A. ASTM A105/A105M (2014); *Standard Specification for Carbon Steel Forgings for Piping Applications*
B. ASTM A126 (2004); *Standard Specification for Gray Iron Castings for Valves, Flanges and Pipe Fittings (Reapproved 2014)*
C. ASTM A182/A182M (2014 Rev. B); *Standard Specification for Forged or Rolled Alloy and Stainless Steel Pipe Flanges, Forged Fittings, and Valves and Parts for High-Temperature Service*
D. ASTM A193/A193M (2014 Rev. A); *Standard Specification for Alloy-Steel and Stainless Steel Bolting for High Temperature or High Pressure Service and Other Special Purpose Applications*
E. ASTM A194/A194M (2014 Rev. A); *Standard Specification for Carbon and Alloy Steel Nuts for Bolts for High Pressure or High Temperature Service, or Both*

F. ASTM A216/A216M (2014); *Standard Specification for Steel Castings, Carbon, Suitable for Fusion Welding, for High-Temperature Service*
G. ASTM A217/A217M (2014); *Standard Specification for Steel Castings, Martensitic Stainless and Alloy, for Pressure-Containing Parts, Suitable for High-Temperature Service*
H. ASTM A262 (2014); *Standard Practices for Detecting Susceptibility to Intergranular Attack in Austenitic Stainless Steels*
I. ASTM A276/A276M (2015); *Standard Specification for Stainless Steel Bars and Shapes*
J. ASTM A320/A320M (2014); *Standard Specification for Alloy-Steel and Stainless Steel Bolting for Low-Temperature Service*
K. ASTM A350/A350M (2014); *Standard Specification for Carbon and Low-Alloy Steel Forgings, Requiring Notch Toughness Testing for Piping Components*
L. ASTM A351/A351M (2014); *Standard Specification for Castings, Austenitic, for Pressure-Containing Parts*
M. ASTM A352/A352M (2006); *Standard Specification for Steel Castings, Ferritic and Martensitic, for Pressure-Containing Parts, Suitable for Low-Temperature Service* (Reapproved 2012)
N. ASTM A479/A479M (2014); *Standard Specification for Stainless Steel Bars and Shapes for Use in Boilers and Other Pressure Vessels*
O. ASTM A536 (1984); *Standard Specification for Ductile Iron Castings (Reapproved 2014)*
P. ASTM B584 (2014); *Standard Specification for Copper Alloy Sand Castings for General Applications*
Q. ASTM B61 (2008); *Standard Specification for Steam or Valve Bronze Castings (Reapproved 2013)*
R. ASTM F993 (1986); *Standard Specification for Valve Locking Devices (Reapproved 2011)*

1.3.4.5 American Water Works Association (AWWA)

A. AWWA C515 (2009); *Reduced-Wall, Resilient-Seated Gate Valves for Water Supply Service*

1.3.4.6 Manufacturers Standardization Society (MSS)

A. MSS SP-6 (2012); *Standard Finishes for Contact Faces of Pipe Flanges and Connecting-End Flanges of Valves and Fittings*
B. MSS SP-25 (2013); *Standard Marking System for Valves, Fittings, Flanges and Unions*
C. MSS SP-45 (2003); *Bypass and Drain Connections (Reapproved 2008)*
D. MSS SP-55 (2011); *Quality Standard for Steel Castings for Valves, Flanges Fittings and Other Piping Components - Visual Method for Evaluation of Surface Irregularities*
E. MSS SP-61 (2013); *Pressure Testing of Valves*
F. MSS SP-70 (2011); *Gray Iron Gate Valves, Flanged and Threaded Ends*
G. MSS SP-72 (2010 Rev. A); *Ball Valves with Flanged or Butt-Welding Ends for General Service*

H. MSS SP-80 (2013); *Bronze Gate, Globe, Angle, and Check Valves*
I. MSS SP-85 (2011); *Gray Iron Globe and Angle Valves, Flanged and Threaded Ends*
J. MSS SP-105 (2010); *Instrument Valves for Code Applications*
K. MSS SP-110 (2010); *Ball Valves Threaded, Socket-Welding, Solder Joint, Grooved and Flare Ends (Errata 2010)*

1.3.4.7 National Fire Protection Association (NFPA)

A. NFPA 24 (2013); *Standard for the Installation of Private Fire Service Mains and Their Appurtenances*

1.3.4.8 Pipe Fabrication Institute (PFI)

A. PFI ES-5 (2013); *Cleaning of Fabricated Piping*

1.4 System Descriptions

NOT USED

1.5 Submittals

1.5.1 Submittals that are listed within the section shall be prepared and processed in accordance with requirements of CSI Section 01 33 00 "Submittals" and shall include all of the required Quality Assurance documentation in accordance with CSI Section 01 40 00 "Quality Assurance".

1.5.2 Requests for Information (RFI) shall be submitted on form A-6003-417 (provided by BUYER).

1.5.3 Final Data Package submittal items listed in sections 1.5.6 through 1.5.26 below shall be submitted by the VENDOR and approved by the BUYER prior to release for shipment.

1.5.4 Design Codes and Standards including revision and/or issue date shall be provided by the VENDOR.

1.5.5 A quality system for materials specifying testing per ASME shall be provided in accordance with QA Clause B10.

1.5.6 Calibration certificates for VENDOR owned test instruments and measuring tools that will be used during fabrication, inspection, and testing in accordance with QA Clause B12.

1.5.7 A fabrication, inspection, and test plan shall be provided in accordance with QA Clause B13.

1.5.8 Nonconformance documentation and reports (NCR) shall be provided in accordance with QA Clause B22. NCRs dispositioned as "Accept" or "Repair" shall be submitted prior to component acceptance.

1.5.9 Certified Weld Inspector (CWI) records shall be provided in accordance with QA Clause B25.

1.5.10 Welding Procedure Specifications (WPS), Procedure Qualification Records (PQR) and Welder Qualification records shall be provided in accordance with QA Clause B28. Procedures and welder continuity records shall be qualified in accordance with ASME B31.3, Para. 328.2 and ASME Boiler & Pressure Vessel Code (BPVC) Section IX Form QW-482, as applicable.

1.5.11 Nondestructive Examination (NDE) personnel and NDE inspection reports shall be provided in accordance with QA Clause B31.

1.5.12 Valves shall be identified with part/model number and supplied with a product datasheet in accordance with QA Clause B34. Additional identification requirements are listed in Section 2.5.

1.5.13 Liquid Penetrant Material Certification shall be provided in accordance with QA Clause B46.

1.5.14 Certified Material Test Reports (CMTR's) shall be provided for all metallic components that provide containment in accordance with QA Clause B49.

1.5.15 The following inspections and test reports shall be provided in accordance with QA Clause B52:

1.5.15.1 Weld inspection and NDE inspection reports

1.5.15.2 Weld maps and weld history

1.5.15.3 Weld gas certificates of analysis - % purity

1.5.15.4 Cleaning and inspection of cleaning reports

1.5.15.5 Final inspection reports including critical dimension verification and weight

1.5.15.6 Pressure test records

1.5.16 Final fabrication travelers shall be provided for each valve component, regardless of safety significance.

1.5.17 High strength graded fasteners shall be controlled in accordance with QA Clause B73.

1.5.18 Certification against the procurement of potentially suspect or counterfeit items (i.e. all supplied materials shall be genuine, new and unused), in accordance with QA Clause B76.

1.5.19 Certificates of Conformance (CoC) shall be provided for each item, including weld rod/filler material and anchor plates, on the purchase order in accordance with QA Clause B79, except for CGD FQA items, which shall be in accordance with QA Clause B80.

1.5.20 A recommended spare parts list shall be provided in accordance with QA Clause B82.

1.5.21 The VENDOR shall meet the requirements of the BUYER'S Commercial Grade Dedication (CGD) Plan for FQA items if the items are designed, manufactured, tested and inspected by a non-NQA program.

1.5.22 Packing and shipping requirements shall be provided in accordance with QA Clause B85. Reference section 1.6 of this specification for additional delivery, storage and handling requirements.

1.5.23 Direct drop shipment shall be provided for procurement of all ASME materials in accordance with QA Clause B88.

1.5.24 Copies of waivers granted by the BUYER to deviate from requirements of the purchase order or this specifications shall be included with the piping materials at shipment.

1.5.25 VENDOR shall submit technical data sheets and Safety Data Sheets (SDS) for non-metallic components such as gaskets, seals, sealants, desiccants and lubricants for any and all such materials being provided, in accordance with QA Clause B33. Identification of age control items shall be in accordance with QA Clause B43.

1.5.26 Installation, Operation and Maintenance Manuals (IOM) shall be provided.

1.6 Delivery, Storage & Handling

1.6.1 Refer to related CSI Section 01 66 00 "Delivery, Storage and Handling" for general delivery, storage and handling related requirements in addition to the requirements of this section.

1.6.1.1 Weld preps and flange faces shall be protected with covers that will prevent damage to the weld preps and flange faces during shipment and handling.

1.6.1.2 All threaded connections shall be plugged or capped with metal or plastic thread protectors.

1.6.1.3 All other covers shall be either wood or plastic bolted, snapped or wired on covers.

1.6.1.4 Self-fastening plastic covers are acceptable.

1.6.1.5 Covers or caps containing fluorides, chlorides, sulfur, lead, zinc, copper and mercury are not allowed on stainless steel piping ends or flange faces.

1.6.1.6 Valves shall be supported with cribbing as necessary to comply with CSI Section 01 66 00 requirements for shipping.

1.6.1.7 Valves shall be covered during shipping as specified by CSI Section 01 66 00.

1.6.2 Preparation for Shipment

1.6.2.1 Each unit shall be completely drained of all liquid prior to shipment. VENDOR shall be responsible for all valve damage which occurs as a result of improper drainage.

1.6.2.2 Each steel alloy valve shall be painted in accordance with the VENDOR'S standard practice. Nameplates, identification tags, machined mating surfaces and stainless steel material shall not be painted.

1.6.2.3 For shipment, each unit shall be disassembled only to such extent as may be necessary to facilitate field handling and to prevent damage during shipment. Loose components shall either be strung on wire and securely attached to the valve or be furnished in a box.

1.6.2.4 The stem of rising stem valves and all exposed threads shall be coated with an antiseize lubricant.

1.6.2.5 Metal seated valves shall be shipped in the closed position.

1.6.2.6 Metal seated swing check valves shall be blocked closed and be furnished with instructions (attached to valve) to remove blocking before installation.

1.6.2.7 The manufacturer shall be responsible for determining if valves require blocking.

1.6.2.8 Resilient (soft) seated valves shall be shipped in the open position.

1.6.2.9 Valves for special services such as chlorine or oxygen shall be individually packaged and sealed with desiccant in a clear polyethylene bag or a BUYER approved substitute.

1.6.2.10 If necessary, outdoor storage shall be indicated in the valve purchase order.

1.6.2.11 Unless otherwise specified, machined or threaded surfaces of ferritic valves shall be coated with an easily removable, rust preventive compound. Valves cleaned for special services (i.e. oxygen service) shall not have a rust-preventive compound applied.

1.6.2.12 Austenitic stainless steel shall be sealed in plastic or otherwise completely protected from exposure to ocean and road salt (salt water, salt water spray, mist etc.). In the event that valves may have become exposed to salt the valves shall be washed with water having chloride content no greater than 50 ppm and then thoroughly dried.

1.6.2.13 Temporary supports in contact with austenitic stainless steel for shipping or storage shall not be of moisture-retaining materials such as raw wood or be of ferritic metals.

1.7 Quality Assurance

1.7.1 Applicable QA Clauses are summarized in the table below. The full QA Clause definition and associated requirements are located in CSI Section 01 40 00.

Table 1.7.1-1 Procurement Quality Clause

SUPPLIER FABRICATION
B10 Quality System for Materials Specifying Testing Per ASME
B12 Supplier Use of Calibrated Equipment
B13 Fabrication/Inspection/Test Plan
B22 Nonconformance Documentation and Reporting

B25 Certified Weld Inspector (CWI)
B28 Welding Procedures and Qualifications
B31 Nondestructive Examination Process
MATERIAL IDENTIFICATION
B33 Identification of Items with Product Data Sheet
B34 Identification of Items
B43 Identification of Age Control Items
TESTING AND TEST DATA
B46 Liquid Penetrant Material Certification
B49 Certified Material Test Report
B52 Inspection and Test Report
INSPECTION AND ACCEPTANCE CRITERIA
B73 Control of Graded Fasteners
B76 Procurement of Potentially Suspect or Counterfeit Items
B79 Certificate of Conformance
B80 Certificate of Conformance for Commercial Grade Surveyed Procurements
B82 Recommended Spare Parts Listing
MATERIAL HANDLING
B85 Packaging/Shipping Procedures
B88 Direct Drop Shipment

1.7.2 There are multiple quality assurance levels applied within this document. The varying quality levels are identified on the Piping Valve List, 31269-16-LST-0002.

1.7.2.1 For Commercial Quality Assurance (CQA) level items and Enhanced Quality Assurance (EQA) level items all requirements addressed within this specification apply with the exception of "Safety Significant" labeled requirements.

1.7.2.2 For Full Quality Assurance (FQA) level items additional requirements such as non-destructive examination (NDE) and witness prior to testing are addressed within this specification and labeled as "Safety Significant." The VENDOR shall meet the applicable basic requirements of ASME NQA-1.

1.7.3 Hold Points

1.7.3.1 The following verification points required by this section shall be in accordance with CSI Section 01 40 00 and verified by the BUYER, as applicable.

1.7.3.2 At a minimum, the following witness and hold points shall apply:

Table 1.7.3.2-1 Hold Point Verification

Verification Point Description	Type of Verification
Prior to Fabrication	H
Prior to Initial Production Welding (First Weld*)	N/A
Prior to Testing (Safety Significant Valves**)	W
Prior to Inspections	H
Prior to Acceptance Testing	N/A
Prior to Shipping	H

*First Weld Strike for Each Weld Procedure
**This hold is only applicable for safety significant valves identified as FQA. The receipt of a test report or CoC for non-safety significant valves shall be sufficient.

(H) Hold
(W) Witness

1.7.3.3 The VENDOR shall provide required notifications of verification points in accordance with CSI Section 01 40 00 as applicable, and shall not proceed past required hold points without written authorization from the BUYER QA representative.

1.8 Site Conditions

Refer to CSI Section 01 66 00 Site Conditions section.

2.0 PART 2 - PRODUCT

2.1 Manufacturers

2.1.1 Materials which are specified by manufacturer and/or proprietary name on engineering documents are so specified only for the purpose of establishing the type and standard of quality required. The manufacturer and/or proprietary names do not preclude the use of BUYER-approved substitutes. Where names of manufacturers are listed, the order of listing is not indicative of an order of preference. No material substitutions or deviations shall be made without written approval from the BUYER. All substitutions and deviations shall be submitted to the BUYER for resolution via the request for information (RFI) process in accordance with CSI Section 01 25 00. Requests for substitutes shall be accompanied with manufacturer's catalog data.

2.2 Materials

2.2.1 General

2.2.1.1 All valves shall meet the requirements of ASME B31.3, unless otherwise specified.

2.2.1.2 All valves and valve components (bolts, gaskets, etc.) shall be furnished new and in accordance with CSI Section 40 50 00.11 and this specification.

2.2.1.3 All valves shall not contain any asbestos materials (e.g. bonnet gaskets, stem packing, etc.)

2.2.1.4 Valves shall not contain any packing or gasketing materials having a leachable chloride content of 50 ppm or greater.

2.2.1.5 End connections shall be furnished in accordance with the following:

A. Pipe threads shall be taper threads in accordance with ASME B1.20.1.
B. Butt-weld ends shall be beveled in accordance with ASME B16.25. Flame cut weld bevels are not allowed. Butt-weld end valves shall be bored to match the pipe specified on the applicable Valve Specification Sheet in CSI Section 40 05 00.11. The bore of butt-weld ends valves shall conform to ASME B36.10M or ASME B36.19M as applicable.
C. Socketweld ends in accordance with ASME B16.11.
D. Flanged ends in accordance with ASME B16.5 or ASME B16.47, as applicable.

2.2.1.6 Flanged valves shall be provided with flanges integral to the body.

2.2.1.7 VENDOR shall indicate at time of bid if any valve or actuator has orientation limitations and those indications shall be clearly marked on the on the body of the valve or actuator in accordance with MSS SP-25.

2.2.1.8 Valves that must be installed with flow in a particular direction shall have the flow direction clearly marked on the valve body per MSS SP-25.

2.2.1.9 Blowout Proof Stems/Shafts shall be designed so that if failure of the stem-to-disc, failure of the shaft-to-disc, or internal failure of the stem or shaft occurs, no portion of the stem or shaft can be ejected from the valve as a result of internal pressure.

2.2.1.10 Soft seated valves shall be rated for the pressure and temperature specified on the Valve Specification Sheets in CSI Section 40 05 00.11.

2.2.2 OS&Y Valves

2.2.2.1 All metallic gate, globe, angle and stop check valves shall be provided with outside screw and yoke (OS&Y) construction unless otherwise specified.

2.2.2.2 All OS&Y valves shall have non-rising hand-wheels.

2.2.2.3 OS&Y valves shall be provided with back seated construction. The design shall be such that the stem shall not be capable of removal from the valve, while the valve is under pressure.

2.2.2.4 Steel valves not complying with the ASME B16.10 pattern and dimensional requirements shall be noted as such in the technical exceptions section of the VENDOR'S proposal.

2.2.3 Packing

2.2.3.1 Valves identified for use in vacuum service shall be provided with lantern type glands except for packless globe valves. For valves where gland sealing is not practical, valves with extra deep stuffing box glands shall be provided.

2.2.3.2 Valve packing shall be flexible graphite with corrosion inhibitor, unless otherwise specified. Exceptions require expressed written BUYER Approval.

2.2.4 Gate Valves

2.2.4.1 Gate valves 2 in and smaller may be of the solid or flexible wedge disc type. Gate valves larger than 2 in shall have flexible/split wedge discs.

2.2.4.2 Parallel slide gate valves shall be full body guided with hard-faced guides.

2.2.5 Globe Valves shall be provided as tee body design unless specified on the Valve Specification Sheets in CSI Section 40 05 00.11 as another design.

2.2.6 Swing Check Valves with bolted cover shall be of a design that allows removal of the disk and resurfacing of the seats without removing the valve from the line.

2.2.7 Butterfly Valves

2.2.7.1 Butterfly valve seats shall be of a design that permits removal and replacement in the field without the use of special tools. Seats must also be capable of being replaced in the field without chipping, grinding, or burning out of the old seal or retaining substance.

2.2.7.2 Butterfly valves without a gear operator shall be supplied with a throttling plate.

2.2.8 Ball Valves

2.2.8.1 Trunnion ball valves shall have self-relieving seats.

2.2.8.2 Soft-seated valves shall have an anti-static device and blowout proof design.

2.2.8.3 Ball valves with graphite packing shall be of fire safe design.

2.2.8.4 Ball valve designs shall be designed for a minimum of 5 degrees of over- or under-travel to ensure port closure when the valve is positioned in the "closed" or "blocked" position.

2.2.9 Plug Valves

2.2.9.1 Sleeve-lined plug valves shall have electrical continuity in accordance with API 599.

2.2.10 Non-Metallic Components

2.2.10.1 VENDOR shall confirm with the BUYER that the offered non-metallic component is acceptable for the temperature range and process service specified on the Valve Specification Sheets in CSI Section 40 05 00.11.

2.2.10.2 Pre-qualified non-metallic components for use where contact with tank waste is anticipated are as follows. Qualification for other non-metallic components would require material qualification testing and written BUYER'S approval.

A. UHMWPE
B. EPDM

2.2.11 Accessories

2.2.11.1 The location and/or arrangement of all accessories shall be in accordance with the VENDOR'S standard practice unless otherwise specified herein or otherwise noted by the BUYER on VENDOR'S preliminary drawings.

2.2.11.2 Accessories specified on the Piping Valve List or on the Valve Specification Sheets in CSI Section 40 05 00.11 shall be of the manufacturer's standard unless otherwise specified herein.

2.2.12 Drain Connections shall be sized for each valve in accordance with MSS SP-45 and shall be plugged. The plug shall be made from the same material as the body.

2.2.13 Bypasses shall be sized in accordance with Series B of MSS SP-45. The bypass globe valve and bypass piping shall be the same material as the main valve.

2.2.14 Operators

2.2.14.1 All valve operators shall provide external indication of disc or ball position and open counterclockwise. External position indicators shall accurately indicate the valve position while accounting for all valve shaft and linkage rotational tolerances.

2.2.14.2 Direction of handwheel rotation for opening and closing the valve shall be clearly and indelibly indicated on the handwheel.

2.2.14.3 Handwheel operators shall be removable.

2.2.14.4 Operators shall be capable of opening and closing the valve under the maximum differential pressure even after a full thermal cycle of the system. The maximum differential pressure shall be defined as the cold water working pressure (CWP) of the valve.

2.2.15 Gear Operators

2.2.15.1 Gear operators shall be provided as indicated on the Valve Specification Sheets in CSI Section 40 05 00.11.

2.2.15.2 Without exception the VENDOR shall provide valves that require no more than 80 lbs. of total rim force on the gearing handwheel to open and close including seating and unseating after a full thermal cycle of the system.

2.2.15.3 Rim force calculations shall be based on the maximum differential pressure. In the absence of a specified differential pressure the ASME CWP shall be assumed.

2.2.15.4 The VENDOR shall determine the combination of handwheel size, impact wheels and gear ratio necessary to meet the requirements above.

2.2.15.5 Gear operators shall be the manufacturer's standard design and materials for the type of valve specified herein. Orientation will be determined by the BUYER after receipt of VENDOR'S drawings.

2.2.15.6 Each manual gear operator shall be of the totally enclosed worm gear type and shall be weather proof.

2.2.16 Locking Devices not provided by the manufacturer shall conform to ASTM F993.

2.2.17 Floor Stands and indicators shall be of the manufacturer's standard for the specific valve.

2.3 Equipment

NOT USED

2.4 Components

NOT USED

2.5 Fabrication

2.5.1 Valves shall be cleaned in accordance with PFI ES-5 as a minimum. Cleaning solvents for stainless steel piping may be non-halogenated solvents containing less than 50-ppm total chlorides or water containing less than 50 ppm chloride.

2.5.2 Defects in the body, bonnet, disk or plugs of a cast or forged carbon or alloy valve revealed by inspection, examination, or test, may be repaired as permitted by the applicable manufacturing standard. Repaired valves shall be re-examined and retested. The BUYER reserves the right to reject any valve with weld repairs at no cost to the BUYER. Any such instances of defects shall be documented on an NCR and identified to the BUYER in accordance with Section 1.5.8.

2.5.3 Marking

2.5.3.1 Labeling of valves shall be in accordance with CSI Section 01 60 00 "Labeling."

2.5.3.2 Except as modified by the applicable valve manufacturing standard, valves shall be marked as required in MSS SP-25. Marking shall also conform to the additional requirements specified herein.

2.5.3.3 Valves manufactured with dual certified materials shall have both material designations shown.

2.5.3.4 Flow direction shall be marked on unidirectional valves.

2.5.3.5 Check valves that are suitable only for horizontal service shall be identified as such on the valve body. (The valve sheet may disallow these valves).

2.5.3.6 Valves shall have direction of operation (i.e clockwise (CW) to close and counter clockwise (CCW) to open) provided at the operation location.

2.5.3.7 If any additional marks are put on the valve, the marking materials used on austenitic stainless steel and nonferrous alloys shall not contain harmful metal or metal salts such as zinc, lead, or copper which cause corrosive attack upon heating. Marking materials also shall contain less than 50 ppm chlorides.

2.5.4 Each valve shall have a durable stainless steel nameplate permanently attached to the yoke, cover, or top of valve. Nameplates shall include at least the following:

2.5.4.1 Purchase order number (as listed on purchase order)

2.5.4.2 Manufacturer's name

2.5.4.3 Figure number

2.5.4.4 Serial number

2.5.4.5 Size

2.5.4.6 Pressure class (if applicable)

2.5.5 Identification Tags

2.5.5.1 Each valve shall be furnished with two identification tags. One tag shall be stamped with the applicable valve specification tag number and shall be attached to the appropriate valve. The second tag shall be stamped with the unique valve tag number and shipped in a box titled "Valve Tags" for installation by field personnel. The valve specification tag numbers and unique valve tag numbers are specified on the Piping Valve List.

2.5.5.2 Soft-seated valves with welding ends, socket welding ends, or threaded ends requiring seal welds shall be provided with a warning tag stating that the temporary removal of all soft-sealing materials from valve prior to welding is required.

2.5.5.3 The tags shall be of 28 gauge (minimum) stainless steel and attached with 28 gauge (minimum) braided stainless steel wire and a meter seal or similar wire holding device (a sufficient quantity of wire and meter seals for attaching tags shall be shipped with the tags). The characters on the stamp shall be a minimum of 3/16-in height. Valves not properly tagged and clearly legible shall not be accepted. Location of tag shall not interfere with the installation or operation of the valve.

2.6 Shop Quality Control

2.6.1 All work associated with this specification shall be performed in accordance with the quality assurance requirements specified in the contract documents and CSI Section 01 40 00.

2.6.2 All facilities, materials and fabrication work shall be subject to BUYER inspection.

2.6.3 VENDOR shall maintain a nonconformance program.

2.6.4 Welding repair shall be allowed only with prior written authorization by the BUYER.

2.6.5 Welding Procedures

2.6.5.1 Welding Procedure Specifications (WPS) and Procedure Qualification Records (PQR), if applicable, shall be in accordance with ASME Boiler & Pressure Vessel Code (BPVC) Section IX.

2.6.5.2 Individual WPSs and PQRs shall be provided to the BUYER.

2.6.6 If specified on the purchase order, WPSs and PQRs shall be submitted to the BUYER for approval prior to the start of any welding.

2.6.7 Pressure testing

2.6.7.1 Each valve shall be hydrostatically shell and seat tested in accordance with the applicable manufacturing standard specified on the Valve Specification Sheets in CSI Section 40 05 00.11.

2.6.7.2 The water used for testing valves with stainless steel components shall have a chloride content less than 50 ppm.

2.6.7.3 If a bypass is required, then the bypass shall be welded to the main valve and hydrostatically tested to prove that the piping and the bypass valve will withstand a pressure not less than 150% of the main valve's 100°F (38°C) pressure rating.

2.6.8 Non-Destructive Examination

2.6.8.1 All valves shall be visually inspected on all accessible surfaces. Visual examination for castings shall be performed in accordance with the requirements to MSS-SP-55.

2.6.8.2 Non-destructive examination is required for each "Safety Significant" valve as indicated on the Piping Valve List. The extent of examination shall be as follows:

A. 100% Visual Examination (VT) in accordance with MSS SP-55. Valve body dimensions shall be taken at the nozzles where the shell thickness is thinnest relative to the rest of the valve body, in order to verify compliance with the wall thickness as specified in the applicable Valve Specification Sheet in CSI Section 40 05 00.11.
B. 100% Liquid Penetrant Examination (PT) in accordance with ASME B16.34
C. 100% Radiography (RT) in accordance with ASME B16.34 on critical areas:
   - End flange to body transition
   - Body transition area to the bonnet
   - Small integral nozzle/bleed connections
   - Both ends of butt-welding end valves
   - Welds of welded bonnets
D. Verification of O-rings, gaskets and seals functionality according to the following acceptance criteria:
   - Part description and number shall be confirmed per the material call out on the applicable Valve Specification Sheet.
   - Material composition shall be established via chemical analysis per the material call out on the applicable Valve Specification Sheet. Durometer hardness shall be +/- 5 of the specified value on the Shore A scale. For gaskets whose cross section is too small to perform a Shore A test, an alternative test shall be recommended and conducted by the VENDOR. Where the analysis can only be established by destructive testing, a randomly selected set may be used from the same heat/lot. Surfaces shall be free from protruding foreign material and be free of surface defects as determined by visual examination.
   - Dimensional tolerances shall be compliant as specified in manufacturer's data or to tolerances on drawings for fabricated items. Where no manufacturer's data is available, the tolerance shall be as identified by the applicable dimensional standard.

2.6.8.3 Non-destructive personnel certifications shall be in accordance with ASNT SNT-TC-1A to Level II.

3.0 PART 3 - EXECUTION

3.1 Preparation

NOT USED

3.2 Erection, Installation & Application

NOT USED

3.3 Field Quality Control

NOT USED

3.4 Adjusting and Cleaning

NOT USED

3.5 Demonstration

NOT USED

3.6 Protection

NOT USED

4.0 LIST OF APPENDICES

4.1 Appendix A - Supporting Document(s) Issued With This Specification

Appendix A – Supporting Document(s) Issued With This Specification

Lists:	31269-16-LST-0001, Piping Line List
	31269-16-LST-0002, Piping Valve List
Data Sheets:	See CSI Section 40 05 00.11, Piping Materials Specification, for valve data sheets

SPECIFICATION

16-2-003

SHOP AND MODULE PIPING FABRICATION AND INSTALLATION

AECOM ATKINS AREVA

LOW ACTIVITY WASTE PRETREATMENT SYSTEM

Project No. 31269 (T5L01)

Document No. 16-2-003

CSI Section 40 05 05.11

Safety Related ☒ Non-Safety Related ☐

SHOP and MODULE PIPING FABRICATION and INSTALLATION

Prepared for

Washington River Protection Solutions, LLC

Revision: 0 Status: Final

MATTHEW SEAN JEND
STATE OF WASHINGTON
54709
REGISTERED
PROFESSIONAL ENGINEER

5/17/17

FOR PERMITTING
MSJ 5/17/17

REVISION PAGE

Project Name:	LAWPS	Discipline:	Piping
Client:	Washington River Protection Solutions	Project Number: 31269 (T5L01)	
		Latest Revision: 0	

REVISION SIGNATURES

G. Jones		5/15/17	M. Jand		5/17/17
Prepared by		Date	Approved by (SDE/Lead)		Date
J. Jackson		5/15/17	P. Bell		5/17/17
Checked by		Date	Approved by (QA)		Date
M. Quintana		05/17/17	D. Priebe		5/17/17
Verified by (if required)		Date	Approved by (PEM)		Date

Status	Rev. No.	Date	Prepared By	Pages	Description of Changes
Final	0	5/17/17	G. Jones	42	Approved for Construction

Safety Related Yes ☒ No ☐	Quality Level Full QA ☒ Enhanced QA ☐ Commercial QA ☐

TABLE OF CONTENTS

1.0 PART 1 - GENERAL 1

1.1 Section Scope 1
1.2 Related Sections 3
1.3 Codes and Standards 3
1.4 System Descriptions 4
1.5 Submittals 5
1.6 Delivery, Storage & Handling 8
1.7 Quality Assurance 10
1.8 Site Conditions 12

2.0 PART 2 - PRODUCT 13

2.1 Manufacturers 13
2.2 Materials 13
2.3 Equipment 13
2.4 Components 13
2.5 Fabrication 13
2.6 Shop Quality Control 17

3.0 PART 3 - EXECUTION 20

3.1 Preparation 20
3.2 Erection, Installation & Application 20
3.3 Field Quality Control 29
3.4 Adjusting and Cleaning 30
3.5 Demonstration 30
3.6 Protection 30

4.0 LIST OF APPENDICES 31

4.1 Appendix A – Supporting Document(s) Issued with this Specification 31
4.2 Appendix B –Piping Pre-Pressure Test Checklist 31
4.3 Appendix C –Status of Instruments During Pressure Test 31
4.4 Appendix D – Piping Pressure Test Checklist 31

LIST OF TERMS

Abbreviations and Acronyms

Term	Definition
API	American Petroleum Institute
ASME	American Society of Mechanical Engineers
ASTM	ASTM International
AFC	Approved for Construction
AWS	American Welding Society
BPVC	Boiler & Pressure Vessel Code
CGD	Commercial Grade Dedication
CoC	Certificate of Conformance
CMTR	Certified Material Test Report
CQA	Commercial Quality Assurance
CWI	Certified Weld Inspector
DCN	Design Change Notice
ECN	Engineering Change Notice
EQA	Enhanced Quality Assurance
FW	Field Weld
FQA	Full Quality Assurance
ID	Identification
LAWPS	Low Activity Waste Pretreatment System
MSS	Manufacturers Standardization Society
MT	Magnetic Particle Testing
NCR	Nonconformance Report
NDE	Nondestructive Examination
NIST	National Institute of Standards and Testing
OSHA	Occupational Safety and Health Administration
P&ID	Process & Instrumentation Drawing
PFI	Pipe Fabrication Institute
PMI	Positive Material Identification
PPM	Parts Per Million
PQR	Procedure Qualification Record
PSSH	Packaging, Storage, Shipping and Handling
PT	Liquid Penetrant Testing
PWHT	Post Weld Heat Treatment
RFI	Request for Information
RT	Radiographic Testing
SDS	Safety Data Sheet
UT	Ultrasonic Testing

Term	Definition
WPS	Weld Procedure Specifications
WQTR	Welder Qualification Test Records
XRF	X-Ray Fluorescence

Units

°C	Degree Celsius
°F	Degree Fahrenheit
in	Inch
ppm	Parts Per Million

Definitions

BUYER – The company for whom the VENDOR is performing work or services.

COMMERCIAL QUALITY ASSURANCE (CQA) – Level of controls for those items, services, or processes where, based on an evaluation of risk or nuclear safety, no additional quality controls beyond the provider's published or stated attributes of the item, service, or process is required.

DESIGN CHANGE – Within the context of this specification, a DESIGN CHANGE is technically equivalent to a SUBSTITUTION (see SUBSTITUTION). However, the term DESIGN CHANGE may be used to refer to more significant changes to the design compared to a simple substitution.

DEVIATION – Any departure from the requirements contained in the purchase order and specification which VENDOR proposes to incorporate if approved by BUYER.

ENHANCED QUALITY ASSURANCE (EQA) – Level of controls for those items, services, or processes where, based on an evaluation of risk or nuclear safety, additional controls beyond the provider's published or stated attributes of the item, service, or process are needed to verify critical attributes.

FULL QUALITY ASSURANCE (FQA) – Level of controls applied for items services, or processes that are commensurate with the controls invoked under ASME NQA-1 or other appropriate national consensus standard.

HANDLING – The movement or transportation of items following receipt from offsite/ project locations. This includes movement within storage areas and movement/transportation from receipt or storage areas to field locations. Handling requirements include the need for special handling tools and equipment, restrictions on material composition of surfaces in contact with the item, protection against damage or deterioration, which could occur during movement and placement, protection against physical damage due to excessive shock or vibration, and protection against entry of dirt, water, or other contaminants.

HOLD POINT – A mandatory inspection activity beyond which work shall not proceed until (1) the inspection is performed by an independent inspector and/or BUYER and acceptance is authenticated, or (2) a written release is authorized by the organization who established the hold point.

MANUFACTURER – The party responsible for making the metallic piping.

MORE CONSERVATIVE – "More conservative" shall be interpreted as "more protective of the health, safety and well-being of Site workers and facilities, the public, and environment, as applicable."

NONCONFORMANCE – A deficiency in characteristic, documentation, or procedure that renders the quality of an item or activity unacceptable or indeterminate.

PRESSURE-CONTAINING COMPONENTS – Items that form the pressure-containing envelope of the piping system.

PROCUREMENT QUALITY CLAUSES (QA CLAUSES) - Procurement quality clauses are to be used for the acquisition of items and services. The clauses establish contractual obligations for quality program systems, identification, traceability, documents submittals, testing, reporting, qualification, special process controls, inspections, etc.

PRODUCT DATA – Printed information including, but not limited to, catalog cuts, color charts, illustrations, diagrams, templates, performance curves, brochures, and other forms of Product literature.

QUALITY ASSURANCE RECORDS – Quality assurance plans, procedures, and records, including completed documents that furnish evidence of the quality of an item or activities affecting quality.

SHALL / MUST – Denotes project requirements, compliance is required

SHIPPING – The movement of items from an off-site/project location (VENDOR, warehouse, etc.) to an on-site/project location, or movement from an onsite/ project location to an off-site/project location. Shipping requirements include packaging and securing of items to protect against damage or deterioration which could occur during movement and transportation, protection against physical damage due to excessive shock or vibration, protection against entry of dirt, water, or other contaminants, and protection against other environmental conditions such as temperature or humidity.

SHOULD – Denotes recommendation or expectation, compliance is expected.

SPECIFICATION – Refers to any design, fabrication or supply specification.

SUBSTITUTION – Any change or deviation from issued approved drawings, designs, methods, or contract terms and conditions. Changes in products, materials, equipment, methods of construction, and test criteria required by the Contract Documents proposed by the VENDOR after award of the Contract are considered to be requests for substitution.

STORAGE – Holding of items in areas that address: the probable maximum period to be held, the inherent physical limitations of the item itself, and required protection from potential hazards such as fire, corrosion, chemical attack and environmental conditions. Storage also includes the requirements for maintaining the integrity and operability of items through routine maintenance, cleaning, or other means of preservation.

VENDOR – The Company responsible for the supply of equipment or services.

WITNESS POINT – An inspection activity beyond which work shall not proceed until an inspector and/or BUYER is notified and (1) the inspection is performed and released, or (2) the inspection is deferred and can be completed at a later time, or (3) a written waiver is issued by the organization who established the witness point.

1.0 PART 1 - GENERAL

1.1 Section Scope

1.1.1 This specification covers the minimum requirements for:

1.1.1.1 The furnishing and shop fabrication of carbon and stainless steel piping for safety and non-safety related piping systems shown on the drawings or otherwise specified.

1.1.1.2 The furnishing, fabrication, erection and testing of piping required for fabricated modules.

1.1.2 This specification excludes:

1.1.2.1 Requirements for the fabrication of remotely maintainable piping jumpers and connections. See TFC-ENG-STD-22 "Piping, Jumpers, and Valves" for jumper fabrication requirements.

1.1.2.2 Any special requirements for the fabrication of double containment piping. See CSI Section 40 05 23.23 "Double Containment Piping for Waste Transfer" for double containment piping requirements.

1.1.2.3 Requirements for field fabrication, erection and testing of piping. See CSI Section 40 05 05.22 "Field Fabrication and Installation of Piping" for piping field installation requirements.

1.1.3 This specification shall be used in conjunction with ASME B31.3 and other referenced codes and standards.

1.1.4 The BUYER shall be advised immediately in writing of any conflicts as soon as they are identified.

1.1.5 No material substitutions or deviations shall be made to this specification without written approval from the BUYER. All substitutions and deviations shall be submitted to the BUYER for resolution via the Request for Information (RFI) process in accordance with CSI Section 01 25 00 "Substitutions and Design Changes". If differences exist between the drawings, the specifications, or the referenced codes and standards, the BUYER shall be contacted to resolve the conflict. The BUYER's final resolution shall govern.

1.1.6 The VENDOR shall not prepare pipe spool or fabrication drawings until drawings designated "APPROVED FOR CONSTRUCTION" (AFC) are received.

1.1.7 The VENDOR is not authorized to begin fabrication until the VENDOR's drawings are reviewed and approved by the BUYER.

1.1.8 The VENDOR's drawings will be reviewed as requested by the BUYER. The BUYER's review will not relieve the VENDOR of the responsibility for either the accuracy of the VENDOR's drawings or compliance with this specification and the referenced drawings.

1.1.9 The VENDOR will be furnished copies of orthographic and isometric drawings prepared by the BUYER's Engineer. Computer format isometric files may be provided, but record AFC isometric drawings shall be followed.

1.1.10 The scope of the VENDOR's work for shop fabrication includes the following:

1.1.10.1 Fabricating all piping in accordance with the requirements of this specification.

1.1.10.2 Furnish all labor, supervision, tools, equipment and consumable materials required to perform all work specified herein.

1.1.10.3 Procuring, handling, protecting and maintaining records or accounting of all materials required to complete the fabrication of pipe.

1.1.10.4 Preparing spool drawings. Spool drawings shall be extracted from piping orthographic and isometrics when provided by the BUYER's Engineer.

1.1.10.5 Fabrication of pipe spools including installation of all connections shown on the drawings such as for fittings, flanges (including orifice flanges), branch connections/reinforcements, weld-in type thermowells, nuts for supporting insulation on vertical piping, all welded pipe supports and any other structural attachments shown on the engineering drawings.

1.1.10.6 Performing all nondestructive examinations (NDE) for welds and bends as required by this specification, including PMI, wall thickness verification and gasket and seal verification.

1.1.10.7 Providing cleaning, painting and identification of piping.

1.1.10.8 Providing welded attachments required for the pipe supports shown on the drawings.

1.1.10.9 Providing weld end prep of all piping.

1.1.10.10 Applying protective coatings to surfaces after fabrication, as required by this specification. This shall include flanges.

1.1.10.11 Providing and installing temporary protective covers.

1.1.10.12 Providing packaging, crating, loading and shipping of fabricated spools and components.

1.1.11 The scope of the VENDOR's work for module fabrication includes the following:

1.1.11.1 Complying with the scope of the VENDOR's work for shop fabrication specified above.

1.1.11.2 Installation of all valves, instrumentation, pipe supports, hangers, specialty items and connections shown on the drawings such as relief valve nozzles, vents and drains and all other piping associated with the module fabrication.

1.1.11.3 The assembly and erection of pipe in modules and connecting pipe to module equipment.

1.1.11.4 Insulating and heat tracing of piping (if required by piping drawings).

1.1.11.5 Performing Positive Material Identification (PMI) and pressure testing in accordance to ASME B31.3 and this specification.

1.2 Related Sections

01 25 00	Substitutions and Design Changes
01 33 00	Submittals
01 40 00	Quality Assurance
01 60 00	Labeling
01 66 00	Delivery Storage and Handling
40 05 00	Piping, Fittings and Flanges
40 05 00.11	Piping Materials Specification
40 05 05.22	Field Fabrication and Installation of Piping
40 05 05.33	Pipe Welding
40 05 23.23	Double Containment Piping for Waste Transfer
40 05 73	Specialty Valve Specification
40 42 00	Thermal Insulation of Piping, Vessels and Equipment Specification
40 46 00	Piping Protective Coatings
40 70 00.01	Non-Safety Instruments Specification
40 70 00.02	Safety Rated Instruments Specification
40 91 00	Control Valve Specification
TFC-ENG-STD-22	Piping, Jumpers and Valves

1.3 Codes and Standards

1.3.1 Work shall be performed in accordance with the referenced codes, standards and documents for this specification.

1.3.2 The following codes and standards, of the exact issue shown, form part of the BUYER basis of design to the extent specified in the applicable sections of this document. In the event of a conflict between documents referenced herein and the requirements of this specification, the requirements of this specification shall take precedence only when this specification's requirements are more stringent or conservative. If a code or standard not listed below is to be applied to the scope (see Section 1.1), apply the latest code or standard as of April 16, 2015.

1.3.3 Government Documents

1.3.3.1 Occupational Safety and Health Administration (OSHA)

A. 29 CFR 1910

1.3.4 Non-Government Documents

1.3.4.1 American Petroleum Institute (API)

A. API RP 578 (2010); *Material Verification Program for New and Existing Alloy Piping Systems*

1.3.4.2 American Society of Mechanical Engineers (ASME)

A. ASME B31.3 (2012); *Process Piping*
B. ASME Boiler and Pressure Vessel Code, Section II Part D (2013); *Material Properties (Customary)*
C. ASME Boiler and Pressure Vessel Code, Section IX (2013); *Welding, Brazing, and Fusing Qualifications: Qualification Standard for Welding, Brazing, and Fusing Procedures; Welders; Brazers; and Welding, Brazing, and Fusing Operators*
D. ASME Boiler and Pressure Vessel Code, Section V (2013); *Nondestructive Examination*
E. ASME NQA-1 (2008/2009A); *Quality Assurance Requirements for Nuclear Facility Applications*

1.3.4.3 American Welding Society (AWS)

A. AWS A2.4 (2012); *Standard Symbols for Welding, Brazing, and Nondestructive Examination*

1.3.4.4 ASTM International (ASTM)

A. ASTM A380/A380M (2013); *Standard Practice for Cleaning, Descaling, and Passivation of Stainless Steel Parts, Equipment, and Systems*

1.3.4.5 Guideline for Sampling in Commercial-Grade Item Acceptance Process, EPRI, Palo Alto, CA: 1999. Report TR-017218-R1.

1.3.4.6 Manufacturers Standardization Society (MSS)

A. MSS SP-58 (2009); *Pipe Hangers and Supports – Materials, Design, Manufacture, Selection, Application, and Installation*

1.3.4.7 Pipe Fabrication Institute (PFI)

A. PFI ES-3 (2009); *Fabricating Tolerances*
B. PFI ES-5 (2013); *Cleaning of Fabricated Piping*
C. PFI ES-24 (2013); *Pipe Bending Methods, Tolerances, Process and Material Requirements*

1.4 System Descriptions

NOT USED

1.5 Submittals

1.5.1 Submittals that are listed within this section shall be prepared and processed in accordance with requirements of CSI Section 01 33 00 "Submittals" and shall include all of the required Quality Assurance documentation in accordance with CSI Section 01 40 00 "Quality Assurance."

1.5.2 Requests for Information (RFI) shall be submitted on form A-6003-417 (provided by BUYER).

1.5.3 Final Data Package submittal items listed in section 1.5.6. through 1.5.29 below shall be submitted by the VENDOR and approved by the BUYER prior to release for shipment.

1.5.4 Design Codes and standards including revision and/or issue date shall be provided by the VENDOR.

1.5.5 A quality system for materials specifying testing per ASME shall be provided in accordance with QA Clause B10.

1.5.6 Calibration certificates for VENDOR owned test instruments and measuring tools that will be used during fabrication, inspection, and testing in accordance with QA Clause B12.

1.5.7 A fabrication, inspection, and test plan, including a cleaning procedure, shall be provided (for inspections and tests specified in this specification) in accordance with QA Clause B13.

1.5.8 Nonconformance documentation and reports (NCR) shall be provided in accordance with QA Clause B22.

1.5.9 Certified Weld Inspector (CWI) records shall be provided in accordance with QA Clause B25.

1.5.10 Welding Procedure Specifications (WPS), Procedure Qualification Records (PQR) and Welder Qualification records shall be provided in accordance with QA Clause B28. Procedures as well as welder continuity records shall be qualified in accordance with ASME B31.3, Para. 328.2 and ASME Boiler & Pressure Vessel Code (BPVC) Section IX Form QW-482, as applicable.

1.5.11 Bending procedures, which includes forming temperatures, procedures for heat treatment after bending and inspection procedures, shall be submitted by the VENDOR prior to fabrication.

1.5.12 An outline of welding, heat treatment and nondestructive examination (NDE) procedures shall be included for each pipe material class. The outline shall follow the format of CSI Section 40 05 05 .33 "Pipe Welding", Appendix B - Weld Procedure Log for Piping or a BUYER pre-approved substitute.

1.5.13 NDE process, NDE personnel, and Records of Annual Vision Tests shall be provided in accordance with QA Clause B31. NDE includes the following:

1.5.13.1 Nondestructive inspection reports and evaluations of radiographic film, magnetic particle examinations, ultrasonic examinations, visual examinations and any other examinations performed by the VENDOR.

1.5.13.2 Radiographic evaluations shall show date, line number, weld identification number, developed (exposed) radiographic film originals and other pertinent information (i.e., image quality indicators, penetrometers, etc.) for each weld radiographed.

1.5.13.3 Minimum wall thickness measurements, including sampling plan, reports containing each heat/lot along with sample results per the Shop Quality Control section of this document.

1.5.13.4 Hydrostatic/Pneumatic/PMI Test personnel Qualifications

1.5.14 All components shall be identified and traceable in accordance with QA Clause B37.

1.5.15 Liquid Penetrant Material Certification shall be provided in accordance with QA Clause B46.

1.5.16 Certified Material Test Reports (CMTR's) shall be provided for all metallic components that provide containment in accordance with QA Clause B49.

1.5.17 The following inspections and test reports shall be provided in accordance with QA Clause B52:

1.5.17.1 Weld inspection and NDE inspection reports

1.5.17.2 Weld maps and weld history

1.5.17.3 Weld gas certificates of analysis - % purity

1.5.17.4 Records of PWHT for welds, including temperature charts identifying each piece number and line number, set point temperature and holding time, a description of the equipment used, and calibration dates of thermocouples and the recorder.

1.5.17.5 Record of joint repairs (including date, extent of repairs, and responsible individual)

1.5.17.6 Cleaning and inspection of cleaning reports, including:

A. Date and name of VENDOR and responsible individual.
B. Inspection or examination records.
C. Cleaning methods.
D. Certification of visual examination for surface preparation, surface profile, materials.
E. A ppm halogen content test analysis.

1.5.17.7 Final inspection reports including critical dimension verification and weight

1.5.17.8 PMI reports and documentation

1.5.17.9 Fastener torque records

1.5.17.10 Pressure test records (Including purge dam control procedure)

A. Purge dam control procedure which shall include the prohibition of dissolvable purge dam material for pneumatically flushed piping systems and shall include methods to assure removal of all purge dams.
B. Test reports for all module installed piping systems. Shop fabricated piping spools that will be installed in the field will be pressure tested after installation per CSI Section 40 05 05.22.

1.5.18 Final fabrication travelers shall be provided for each component.

1.5.19 All piping components furnished by the VENDOR shall conform with QA Clause B70.

1.5.20 High strength graded fasteners shall be controlled in accordance with QA Clause B73.

1.5.21 Certification against the procurement of potentially suspect or counterfeit items (i.e. all supplied materials shall be genuine, new and unused), in accordance with QA Clause B76.

1.5.22 Certificates of Conformance (CoC) shall be provided for each item, including weld rod/filler material and anchor plates, on the purchase order in accordance with QA Clause B79, except for CGD FQA items which shall be in accordance with QA Clause B80.

1.5.23 For Safety (FQA) items, the VENDOR shall meet the requirements of the BUYER's Commercial Grade Dedication (CGD) plan or be NQA-1 qualified.

1.5.24 Packing and shipping requirements shall be provided in accordance with QA Clause B85.

1.5.25 Direct drop shipment shall be provided for procurement of all ASME materials in accordance with QA Clause B88.

1.5.26 Copies of waivers granted by the BUYER to deviate from requirements of the purchase order or this specification shall be included with the piping materials at shipment.

1.5.27 VENDOR shall submit technical data sheets and Safety Data Sheets (SDS) for non-metallic components such as gasket, elastomer seals, sealants, desiccants, surface coatings and lubricants for any and all such materials being provided, in accordance with QA Clause B33. Identification of age control items shall be in accordance with QA Clause B43. Gasket and seal reports shall be in accordance with the Shop Quality Control section of this specification.

1.5.28 VENDOR shall include approved design changes (Engineering Change Notice's (ECN's) and Design Change Notice's (DCN's)) in the final data package.

1.5.29 VENDOR shall provide shop or module spool drawings that, as a minimum, show the following:

1.5.29.1 Location of all field welds identified as "FW" (Field Weld).

1.5.29.2 Location and identification number of all shop welds, including weld symbols in accordance with American Welding Society (AWS) A2.4.

1.5.29.3 Line Number and Shop Weld Number. Shop welds examined by NDE shall be added to the drawing after completion of NDE.

1.5.29.4 Piece numbers, line numbers and flow direction arrows as identified on piping drawings.

1.5.29.5 Weld end preparation details.

1.5.29.6 Heat and lot number or some type of approved code number that provides traceability for materials requiring Certified Material Test Reports (CMTR's).

1.5.29.7 Location of hanger lug attachments, etc.

1.5.29.8 Bill of Materials.

1.5.29.9 Pipe spool dimensions, assembly weight and pressure testing pressure.

1.5.29.10 Applicable Code and PWHT.

1.5.29.11 Reference notes, specifications and drawings.

1.5.29.12 WPS

1.6 Delivery, Storage & Handling

1.6.1 Refer to related CSI Section 01 66 00 "Delivery, Storage and Handling" for general delivery, storage and handling related requirements in addition to the requirements of this section.

1.6.1.1 All materials shall be handled and stored in a manner that will minimize carbon containment (in the case of stainless steel), corrosion and prevent damage to pipe and piping components including their end connections. VENDOR shall submit their procedure for issuance and storage of welding filler material to the BUYER for review and approval.

1.6.1.2 Weld preps and flange faces shall be protected with covers that will prevent damage to the weld preps and flange faces during shipment and handling.

1.6.1.3 All threaded connections shall be plugged or capped with metal or plastic thread protectors.

1.6.1.4 All other covers shall be either wood or plastic bolted, snapped or wired on covers.

1.6.1.5 Self-fastening plastic covers are acceptable.

1.6.1.6 Covers or caps containing fluorides, chlorides, sulfur, lead, zinc, copper and mercury are not allowed on stainless steel piping ends or flange faces.

1.6.1.7 Protect uncoated ends of carbon steel piping.

1.6.1.8 If plugs or caps are shown on the piping drawings, all plugs, caps and temporary plugs or caps shall meet the requirements of the piping drawing.

1.6.1.9 Pipe nipples and other slender branches shall be temporarily braced and blocked to prevent damage during shipment and handling.

1.6.1.10 Valves, expansion joints, hangers, traps, flow orifices and other similar specialty items shall be handled and stored in accordance with the manufacturer's recommendations and with the aid of lifting lugs when provided by the manufacturer. When these piping components must be stored outdoors, they shall be stored on wooden pallets and covered with black polyethylene sheeting to the satisfaction of the BUYER.

1.6.1.11 Pipe shall be supported with cribbing as necessary to comply with CSI Section 01 66 00 requirements for shipping.

1.6.1.12 Piping shall be covered during shipping as specified by CSI Section 01 66 00.

1.6.1.13 Special piping (e.g., PVC, CPVC, polyethylene, fiberglass, stainless steel, etc.) materials shall be handled and stored in accordance with the manufacturer's recommendations.

1.6.2 The following requirements supplement the requirements in CSI Section 01 60 00 "Labeling":

1.6.2.1 For shop fabricated piping:

A. To facilitate identification and assembly in the field, each pipe spool shall be conspicuously marked on the outside surface of each end with the spool piece number as identified on the isometric drawing.
B. The identification numbers shall be permanently attached text, number or bar code adhesive labels for shop traceability. Crayon markings are not permissible, except for temporary markings. Other forms of labels shall be approved by the BUYER.
C. All materials (including adhesives) contacting austenitic stainless steel and nonferrous alloy surfaces shall comply with CSI Section 01 60 00 and shall contain no more than 50-ppm chlorides. Markings shall not be water soluble.

1.6.2.2 For module fabricated piping:

A. All material specified with a tag number shall be furnished with both nameplates and identification tags.
B. Piping component nameplates shall be fully visible when the equipment is in an operating condition. Nameplates shall include the manufacturer's name, figure number, serial number, size and pressure class (if applicable).
C. Identification tags shall be permanently attached and shall be stamped with the applicable tag number. The tags shall be of 28 gauge stainless steel and attached with 28 gauge braided stainless steel wire and a meter seal or similar wire holding device. The characters on the stamp shall be a minimum of 3/16-inch height. Location of tag shall not interfere with the installation or operation of the equipment.

1.7 Quality Assurance

1.7.1 Applicable Procurement Quality Clauses are summarized in the table below. The full QA Clause definition and associated requirements are located in CSI Section 01 40 00.

Table 1.7.1-1 Procurement Quality Clause

SUPPLIER FABRICATION
B10 Quality System for Materials Specifying Testing Per ASME
B12 Supplier Use of Calibrated Equipment
B13 Fabrication/Inspection/Test Plan
B22 Nonconformance Documentation and Reporting
B25 Certified Weld Inspector (CWI)
B28 Welding Procedures and Qualifications
B31 Nondestructive Examination Process
B33 Identification of Items with Catalog Cut Sheet
B37 Identification and Traceability of Items
B43 Identification of Age Control Items
TESTING AND TEST DATA
B46 Liquid Penetrant Material Certification
B49 Certified Material Test Report
B52 Inspection and Test Report
INSPECTION AND ACCEPTANCE CRITERIA
B70 Supplier Furnished Items
B73 Control of Graded Fasteners
B76 Procurement of Potentially Suspect or Counterfeit Items
B79 Certificate of Conformance
B80 Certificate of Conformance for Commercial Grade Surveyed Procurements
MATERIAL HANDLING
B85 Packaging/Shipping Procedures
B88 Direct Drop Shipment

1.7.2 There are multiple quality assurance levels applied within this document. The varying quality levels are identified in the Piping Line List, 31269-16-LST-0001, by line number.

1.7.2.1 For Commercial Quality Assurance (CQA) level items and Enhanced Quality Assurance (EQA) level items, all requirements addressed within this specification apply as applicable to shop fabrication or module fabrication with the exception of "Safety Significant" labeled requirements.

1.7.2.2 For Full Quality Assurance (FQA) level items all requirements addressed in this specification apply including all additional requirements such as cleaning, torqueing, PMI, wall thickness verification and gasket and seal verification which are labeled as "Safety Significant". The VENDOR shall meet the applicable requirements of ASME NQA-1.

1.7.3 Hold Points

1.7.3.1 The following verification points required by this section shall be in accordance with CSI Section 01 40 00 and verified by the BUYER, as applicable.

1.7.3.2 At a minimum, the following witness and hold points shall apply:

Table 1.7.3.2-1: Hold Point Verification

Verification Point Description	Type of Verification
Prior to Fabrication	H
Prior to Initial Production Welding (First Weld*)	H
Prior to Shop Bends	H
Prior to Testing	W
Prior to Inspections	W
Prior to Acceptance Testing	N/A
Prior to Shipping	H

*First Weld Strike for Each Weld Procedure

(H) Hold,
(W) Witness

1.7.3.3 The VENDOR shall provide required notifications of verification points in accordance with Specification CSI Section 01 40 00 as applicable, and shall not proceed past required hold and witness points without written authorization from the BUYER QA representative.

1.7.3.4 The BUYER's inspector shall be notified in advance of shipment. The shipment shall be placed on hold until BUYER's inspector:

A. Performs a walk-down to verify that the work is in accordance with the Piping and Instrumentation Diagrams (P&IDs), drawings and this specification.
B. Verifies marking and identification is in accordance with marking and identification requirements.
C. Visually examines items that are accessible without disassembly for general workmanship, cleanliness and quality.
D. Verifies PMI and all applicable manufacturing records/documentation are in accordance with this specification.
E. Verifies packaging and shipping preparation to ensure compliance to this specification.
F. Verifies that each component of the packing list is included in the shipment.

1.8 Site Conditions

1.8.1 Refer to CSI Section 01 66 00 Site Conditions section.

2.0 PART 2 - PRODUCT

2.1 Manufacturers

NOT USED

2.2 Materials

2.2.1 All piping component material shall be furnished new and in accordance with the requirements stated in the applicable pipe material classes found in CSI Section 40 05 00.11 "Piping Materials Specification" under the rules of ASME B31.3 and in conjunction with CSI Section 40 05 00 "Piping, Fittings and Flanges".

2.2.2 Fabricated module piping in addition shall be furnished with remotely maintainable manual valves in accordance with CSI Section 40 05 73 "Specialty Valve Specification", control valves in accordance with CSI Section 40 91 00 "Control Valve Specification" and instruments in accordance with CSI Section 40 70 00.01 "Non-Safety Instruments Specification" or CSI Section 40 70 00.02 "Safety Related Instruments Specification," as applicable.

2.3 Equipment

NOT USED

2.4 Components

NOT USED

2.5 Fabrication

2.5.1 Segregation of carbon steel and stainless steel shall be maintained throughout the welding and fabrication process. Tools used for fabrication of carbon steel weldments shall not be used for stainless steel fabrication. Keep piping systems clean and dry. Upon the commencement of fabrication, plug or cap ends of piping when fabrication is not in progress.

2.5.2 Threaded joints shall be tapered and conform to ASME B1.20.1, and shall be made up to insure adequate thread engagement.

2.5.3 Welded Joints

2.5.3.1 All welding shall be performed in accordance with ASME B31.3, CSI Section 40 05 05.33 "Pipe Welding" and the requirements of this specification.

2.5.3.2 The Weld Procedure Log in CSI Section 40 05 05.33 shall be completed by the VENDOR.

2.5.3.3 All welding under this specification shall be placed on hold until the WPSs, PQRs and Welder Qualification Test Records (WQTRs) have been approved by the BUYER's Engineer.

2.5.3.4 Unless noted otherwise on the isometric drawing, field fit up welds shall include 6 in. of pipe beyond the length required to meet dimensions shown on the isometric drawing.

2.5.3.5 Longitudinal seams in adjoining lengths of welded pipe shall be staggered and located so that they will not intersect openings and external attachments.

2.5.3.6 When thermal cutting is required, the material shall be preheated in accordance with the BUYER approved welding procedure and the welding preheat requirements of ASME B31.3. Thermal cut surfaces shall be ground to remove all slag, oxide and surface irregularities. Austenitic stainless steel pipe shall be cut by mechanical means only, unless permitted in writing by the BUYER.

2.5.4 Refer to CSI Section 40 05 05.33 regarding requirements for the repair of weld defects.

2.5.5 Surface Finish

2.5.5.1 Repair of base metal shall be allowed only with prior written authorization by the BUYER.

2.5.5.2 The VENDOR shall be responsible for surface finish after the repair of weld defects. Remove weld splatter, sharp edges, corners, projections, pits, scratches, or other sharp depressions and surface irregularities.

2.5.5.3 The surfaces shall be ground if necessary, to eliminate irregularities that can inhibit the interpretation of imperfections.

2.5.5.4 Blend grinding is permitted as long as the metal wall thickness is not reduced to less than that permitted in the applicable ASTM standard, without BUYER's approval. Repairs shall be made in accordance with the qualified welding procedures with PWHT as required per ASME B31.3.

2.5.6 Fabrication Tolerance and Alignment

2.5.6.1 Unless otherwise specified, dimensions of all shop fabricated piping shall be within the tolerances specified in Pipe Fabrication Institute (PFI) Standard ES-3 and the BUYER's Drawings.

2.5.6.2 All piping shall be plumb and square. Unless otherwise specified, the internal misalignment of ends to be joined shall not exceed the lesser of 1/16 in. Where misalignment exceeds the permitted misalignment, the end of the thicker pipe shall be bored in accordance with Paragraph 328.4.2(b)(1) and 328.4.3 of ASME B31.3.

2.5.6.3 Templates, pantographs, or other suitable methods shall be used in laying out stub-ons, laterals, and other irregular details to ensure accurate cutting and proper fit-up. Caution shall be used in fitting up pipe and components for tack welding, to ensure a proper gap for full-penetration welds.

2.5.6.4 Unless otherwise specified, bolt holes of fixed flanges shall be oriented as follows:

A. Vertical flange faces: A pair of bolt holes shall straddle the vertical centerline.
B. Horizontal flange faces: A pair of bolt holes shall straddle the plant north/south centerline.
C. Sloping flange faces: A pair of bolt holes shall straddle the plane defined by the centerline of the pipe and a vertical line.

2.5.6.5 Slip-on flanges shall be double-welded and positioned as shown in Figure 328.5.2B of ASME B31.3. The fillet weld shall be applied so that the flange does not require refacing.

2.5.7 The internal surface of welds between the orifice flanges and the connecting pipe shall be ground smooth.

2.5.8 Branch Connections and Miscellaneous Attachments

2.5.8.1 All connections for branches, vents, drains and instruments are specified in each pipe material class found in CSI Section 40 05 00.11.

2.5.8.2 The VENDOR shall install thermowells per detail drawings in each applicable pipe material class.

2.5.8.3 Insulation supports (nuts) shall be welded to vertical piping 10 in. and larger that will be insulated in the field. Nuts shall be installed in accordance with Appendix B of CSI Section 40 42 00 "Thermal Insulation of Piping, Vessels and Equipment Specification".

2.5.8.4 Reinforcing pads and saddles, when used, shall be provided with tapped vent holes that are suitable for pneumatic testing.

2.5.8.5 Reinforcement pads and saddles specified in the pipe material classes or shown on the drawings shall be fabricated to meet the requirements of ASME B31.3.

2.5.8.6 Miscellaneous attachments for hangers, supports or guides shall be of material similar to the pipe and be suitable for the operating temperature.

2.5.9 Pipe Bending and Forming

2.5.9.1 Pipe bending and forming shall conform to the requirements of PFI ES-24 and ASME B31.3.

2.5.9.2 Bends identified on the drawings shall be formed with the radii specified.

2.5.9.3 Pipe bends shall be checked for thinning at the mid-span of the bend, at the intrados, extrados, and bend centerline radius by the VENDOR. Resultant wall thickness measurements shall be submitted for BUYER approval.

2.5.9.4 All shop bends shall be placed on hold and approved by the BUYER prior to commencement of fabrication, and the VENDOR shall submit a bending procedure which includes forming temperatures, procedures for heat treatment after bending and inspection procedures.

2.5.9.5 Tolerances for dimensions of pipe bends shall be in accordance with PFI ES-24.

2.5.9.6 All bends shall be induction bent per Paragraph 332 of ASME B31.3. Where induction bends are not practical cold bends shall be utilized per Paragraph 332 and 304.2.1 of ASME B31.3. No alternates or substitutions will be allowed without prior written approval of the BUYER. Use methods and equipment that produce bends free of wrinkles, bulges or kinks.

2.5.9.7 Refer to the Shop Quality Control section of this specification for examination requirements.

2.5.10 Heat Treatment

2.5.10.1 Preheating and PWHT of welding zones, bends and hot-formed sections shall be in accordance with ASME B31.3, CSI Section 40 05 05.33, and the requirements of this specification.

2.5.10.2 All spools and fabricated modules shall be checked for dimensions and alignment after heat treatment and a gage check shall be made on the threads of couplings, thredolets, and nipples in the spools. Pipe shall also be checked for straightness. Deviation from a straight line shall not exceed 0.2 percent of the length. Piping shall be replaced if threads are out of tolerance or pipe is not straight.

2.5.10.3 After all hot bending, welding, grinding and heat-treating operations have been completed the threads shall be "chased" with the appropriate size pipe tap to remove scale and weld spatter, and to ensure full engagement of threads and a tight joint.

2.5.11 Cleaning and Painting

2.5.11.1 Internal Cleaning

A. All piping shall have loose foreign material such as scale, sand, weld spatter particles, cutting chips, etc., removed from the inside of piping assemblies per PFI Standard ES-5. Cleaning solvents for stainless steel piping shall be non-halogenated solvents or water containing no more than 50-ppm chloride.
B. For "Safety Significant" piping systems, cleaning acceptance criteria shall be class C in accordance with ASME NQA-1, Part II, Subpart 2.1, Para. 302.3. Stainless steel parts shall be cleaned, de-scaled and passivated in accordance with ASTM A380.

C. Use new mechanical cleaning tools (e.g. grinding wheels or tools utilized for cleaning austenitic stainless steel or nickel alloys shall not be previously used on carbon steels). Wire brushes, steel wool or similar items or tools for conditioning and cleaning surfaces shall be made from 300 series stainless steel.
D. Stainless steel components shall not be blasted with reclaimed sand or grit.
E. A cleaning procedure shall be submitted for approval before fabrication.
F. Visually examine cleaned system components and parts to verify cleanliness requirements are met and record results in a cleaning report.

2.5.11.2 Painting of External Pipe Surfaces

A. The VENDOR shall perform all surface preparations and coating application, unless otherwise specified, in accordance with CSI Section 40 46 00 "Piping Protective Coatings".
B. The design documents (i.e., Piping Line List, drawings) indicate those systems that require coatings.
C. Surface preparations and coating applications shall be in strict accordance with the coating manufacturer's recommendation and instruction. BUYER reserves the right to inspect surface preparations and coating applications at any time.
D. Chlorinated solvents shall not be used with stainless steel during the surface preparation process.
E. All piping and spool identification markings shall be transferred back onto the pipe after application of the coating.
F. Coating shall not be applied to internal surfaces of pipe, threads, flange faces or within four inches of any expected field welds. These surfaces shall be wrapped prior to the application of coatings to protect them from overspray.

2.6 Shop Quality Control

2.6.1 General

2.6.1.1 All work associated with this specification shall be performed in accordance with the quality assurance requirements specified in the contract documents and CSI Section 01 40 00.

2.6.1.2 The VENDOR shall be responsible for performing all examinations, inspections, tests, and repairs of welds in accordance with ASME B31.3, CSI Section 40 05 05.33 and this specification.

2.6.1.3 ASME examination personnel shall include certification per ASME BPVC Section V, Article 1, T-120(e) and the requirements of B31.3, Para. 342.

2.6.1.4 All weld examinations shall be performed in accordance with CSI Section 40 05 05.33.

2.6.1.5 Each shop bend shall require 100% ultrasonic examination with reports provided to the BUYER for approval.

2.6.1.6 Wall thickness measurement procedures and reports shall be provided for piping identified as "Safety Significant" in the Line List. Wall thickness measurements apply to pipe bends, piping, bulk piping, butt-weld flanges and butt-weld fittings.

2.6.1.7 Wall thickness measurement samples shall be completed for each "Safety Significant" heat/lot used for spool fabrication and as a minimum shall meet the "Normal Sampling Plan" per Report TR-017218-R1 Table 2-1. A sampled item is considered defective if the measured wall thickness does not meet the established acceptance criteria. The lot acceptance basis is as follows:

A. The lot shall be accepted if the sample metal wall thickness is within the permitted thickness tolerances in the applicable ASTM standard.
B. For ASME B16.9 tees the lot shall be accepted if:
   - The sample metal wall thickness is a minimum of 1.00 times the nominal thickness specified in ASME B36.10M or B36.19M for straight pipe of the specified schedule.
   - The Tee side wall and crotch wall thickness is a minimum of 1.15 times the nominal thickness specified in ASME B36.10M or B36.19M for straight pipe of the specified schedule.

2.6.1.8 Nonconforming lots shall require metal wall thickness measurements of each component in the lot with the established acceptance criteria above applied.

2.6.1.9 Wall thickness reports are to be submitted for the required components for each heat/lot used for spool fabrication. The report shall contain each heat/lot along with sample results. In addition, the applicable bulk pipe and butt-weld fitting wall thickness report is to be linked to every pipe and fitting on each extended spool sheet or referenced on each extended spool sheet where that heat/lot of pipe or butt-weld fittings has been used. The term "butt-weld fitting" includes elbows, tees, reducers, caps, laterals, crosses, butt-weld reinforced fittings and swages; however, it excludes socketweld nipples, fittings and flanges. Additionally, the side wall and crotch thickness of ASME B16.9 tees shall be included in the submitted reports.

2.6.1.10 Reports are to be submitted for verification of gasket and seal (including O-rings) functionality for "Safety Significant" lines per the Piping Line List according to the following acceptance criteria:

A. Part description shall be confirmed per the call out of the applicable pipe material class.
B. Material composition per the applicable pipe material class shall be established via chemical analysis. Where the analysis can only be established by destructive testing, a randomly selected set may be used from the same heat/lot.
C. Durometer hardness shall be +/- 5 of the specified value on the Shore A scale. For gaskets whose cross section is too small to perform a Shore A test, an alternative test shall be recommended and conducted by the VENDOR. Where the durometer can only be established by destructive testing, a randomly selected set may be used from the same heat/lot and as a minimum shall meet the "Normal Sampling Plan" per Report TR-017218-R1 Table 2-1.

D. Surfaces shall be free from protruding foreign material and be free of surface defects as determined by visual examination.
E. Dimensional tolerances shall be compliant as specified in manufacturer's data and as identified by the specified dimensional standard.

2.6.1.11 The VENDOR shall be responsible for ensuring that all requirements set forth in CSI Section 40 05 00, CSI Section 40 05 00.11 and this specification have been satisfied.

2.6.1.12 Nonconforming material shall be physically segregated from acceptable items when possible and shall be in strict accordance to the Quality Assurance section of this document.

2.6.1.13 Nameplates shall be fully visible when the equipment is in an operating condition.

3.0 PART 3 - EXECUTION

3.1 Preparation

NOT USED

3.2 Erection, Installation & Application

3.2.1 This section is applicable for module piping only and shall not apply to piping spools shipped to the field for installation.

3.2.2 Each pipe spool, valve, threaded opening and gasket surface shall be closely inspected for damage and internal cleanliness immediately prior to installation of piping.

3.2.3 General

3.2.3.1 All piping shall be installed in accordance with the requirements of both ASME B31.3 and this specification.

3.2.3.2 All piping shall be installed in a neat, rectangular form. Special attention shall be given to securing a neat appearance. All piping shall generally be installed perpendicular or parallel to the major equipment, building structure, and floor levels.

3.2.3.3 All piping, including tubing, shall be installed in accordance with the following requirements:

A. Valves used for control shall be installed in such a manner that they can be operated from the main operating floors, platforms or remotely.
B. Pipe runs which require drainage shall be installed so that they pitch toward the point of drainage.
C. Piping shall be sloped continuously from high point to low point with a minimum slope of 1/400 unless otherwise directed by the P&IDs or drawings.

3.2.4 Thermal Expansion

3.2.4.1 All piping shall be installed as dimensioned on the design documents so that excessive or destructive expansion forces will not exist either in the cold condition or under conditions of maximum temperature.

3.2.4.2 Expansion joints and supports requiring regular inspection and maintenance (e.g. spring cans) are prohibited in module piping systems requiring remote access.

3.2.5 Cutting and Drilling Structures

3.2.5.1 Drilling, cutting, and patching of structures required for proper installation of piping or bolts shall be performed only when shown on the drawings or only with permission of the BUYER.

3.2.5.2 Penetrations through concrete shall be provided with sleeves and packing as specified per structural design documents.

3.2.6 Equipment and Jumper Connections

3.2.6.1 When attaching piping to equipment and removable jumper connections, special care shall be taken that excessive stresses are not transmitted to, and imposed upon, such connections.

3.2.6.2 The BUYER's Inspector shall be allowed to witness the installation of all such connections. At the BUYER's discretion, the BUYER may disallow any connection that may cause excessive loading. Piping connections to jumpers shall provide for repeatable successful fit-up demonstrations (i.e. jumpers are remotely installed and removed). See TFC-ENG-STD-22 for jumper requirements.

3.2.6.3 Heating to accommodate minor fit-up problems is not allowed.

3.2.7 Piping Tolerances

3.2.7.1 Refer to the Fabrication Tolerance and Alignment section of this specification for tolerance requirements.

3.2.7.2 All flex hoses shall be installed straight and without strain or as indicated on the drawings.

3.2.7.3 No cold springing, unless specifically allowed and within the limits provided on the drawings, will be allowed for piping fit-up. Improperly fitted piping shall be removed and replaced as directed by the BUYER at the VENDOR's expense.

3.2.8 Flange Joints

3.2.8.1 Gaskets and flange faces shall be protected from damage until installation is complete.

3.2.8.2 When temporary makeup at flanged joints is required in systems using special (e.g., GPT Linebacker®, spiral wound, etc.) gaskets, the joints may be made up with less expensive sheet gaskets and the special gaskets saved for the final installation.

3.2.8.3 Special care shall be taken during the installation of the GPT Linebacker® gaskets so that the gasket is not rendered ineffective by misalignment and/or overstressing.

3.2.8.4 Protective grease, paint, and other foreign material shall be cleaned from flange gasket faces prior to positioning the pipe spool for bolt up. Re-facing or repair of damaged flange facing shall not be permitted.

3.2.8.5 Bolt threads shall be coated with a Teflon lubricant. Special anti-galling compound is recommended for stainless steel fasteners. Flanges shall be made up by tightening diametrically opposite bolts in succession to load the gasket evenly or as directed by the manufacturer.

3.2.8.6 When a flanged joint has been made up and subsequently loosened, a new gasket shall be installed prior to retightening the joint.

3.2.9 Torque Requirements

3.2.9.1 Bolt Tension/Torque requirements for flange connections shall be in accordance with the gasket manufacturer's recommended torque requirements necessary to seat the gasket without overstressing the bolts.

3.2.9.2 Calibrate torque wrenches daily with a wrench calibrator.

3.2.9.3 Hydraulic Tensioners shall be used on flanges that make up fabricated module piping identified as "Safety Significant" in the Line List. Care shall be taken to seat the gasket without overstressing the bolts or over compressing the gasket.

3.2.10 Valves

3.2.10.1 All valves shall be installed in strict accordance with the manufacturer's recommendations.

3.2.10.2 The resilient seats or sleeve of valves are very susceptible to damage from heat during welding. The manufacturer's recommendations shall be followed when installing such valves in order to prevent seat or sleeve damage.

3.2.10.3 Valve internals that are removed during the welding process are to be controlled and stored correctly then be reinstalled and inspected per manufacturer instructions.

3.2.10.4 Butterfly Valves

A. The mating flanges for resilient seat butterfly valves shall be sufficiently separated so the valves do not have to wedged or forced into position. Butterfly valve discs shall be set in the open position prior to tightening the mating flange bolting.
B. After the bolts are tight, the operation of the valve shall be checked through a complete open and closed cycle to ensure that the disc or seat has not been jammed or damaged.

3.2.10.5 Check Valves shall be tagged to indicate whether the internals have been removed, jacked open, or left unaltered. Internal parts that have been removed shall be bagged, tagged with the valve number and firmly attached to the appropriate valve.

3.2.11 Pipe Supports

3.2.11.1 Support components in contact with the pipe shall be of a material grade equal to the pipe and suitable for the operating temperature of the pipe.

3.2.11.2 Hangers/supports shall be the type and model numbers called out on the piping isometric drawing (if provided) and meet additional requirements and installation details stated on the standard support details.

3.2.11.3 For lines where there is no isometric drawing or the isometric drawing does not call out a support type the supports shall be Anvil International or equivalent and meet the general requirements set forth in the standard support details in MSS SP-58.

3.2.11.4 The application and spacing of pipe hangers and supports shall be in accordance with the applicable ASME B31.3 and MSS SP-58 when this information is not shown on the drawings.

3.2.11.5 Welding of pipe supports to structural steel framing shall be performed according to structural specifications, and the quality of welding shall be at least equivalent to that provided by the applicable AWS Welding Code. All welds shall run parallel to the axis of the beam span and all welding shall be staggered with cooling allowed between subsequent deposits.

3.2.11.6 All hangers shall be fabricated and installed in accordance with MSS-SP-58.

3.2.11.7 Supports which are located on AFC drawings shall not be relocated or reoriented without the BUYER's approval.

3.2.11.8 All weldments of supports to piping shall be made prior to PWHT.

3.2.11.9 Hangers shall be readjusted during start-up as required by the BUYER.

3.2.12 PMI

3.2.12.1 This section prescribes the requirements for PMI for pressure-containing components to:

A. Verify that the nominal composition of alloy components are of acceptable chemical composition independent of any certificate and marking that may exist.
B. Assure that correct alloy materials are used at the places where intended.

3.2.12.2 General

A. PMI shall be performed as close to the actual final installation as practical and prior to module shipment to ensure installation of the proper materials.
B. Components shall not be disassembled, and welds shall not be excavated to perform PMI.
C. PMI may not be possible at final installation due to the lack of accessibility of components or welds requiring PMI. Inaccessible items requiring PMI shall be tested at the appropriate time during the fabrication or assembly process.

3.2.12.3 Extent of PMI

A. The extent of PMI examination shall be applied to all alloy pressure-containing components that make up fabricated module piping identified as "Safety Significant" in Piping Line List, 31269-16-LST-0001. All pressure-containing parts shall be 100% verified, with the exception of bolting. PMI examination of bolting samples shall be completed for each heat/lot used for spool fabrication and shall meet the "Normal Sampling Plan" per Report TR-017218-R1 Table 2-1.
B. PMI requirements for shop fabricated spools that are shipped to the field will occur in the field per CSI Section 40 05 05.22.
C. This shall consist of a minimum of one test point for each pressure piping component of module piping. This includes each:

- Plate, pipe length, pipe fitting (elbows, olets, tees, reducers, etc.), flange, blind, special component, pipe nipple, solid metal gasket, bolting, etc.
- Body, bonnet/cover and body/bonnet bolting and nuts of process valves (including control valves) and relief valves.
- Pressure containing weld. Welds exceeding 48 in. in length shall include one additional test point for every 48 in. weld length.
- The extent of PMI shall be limited to alloy materials.

3.2.12.4 PMI Test Methods

A. PMI, where required, shall be performed by one of the following methods:
   - Portable X-Ray Fluorescence (XRF) spectrometers with direct reading of alloy grade or percentage of each element present
   - Optical Emission Spectrometry

B. Testing of any material grades not suitable for testing by the above methods shall be tested as agreed upon by the BUYER.

C. Other methods such as chemical spot testing, thermoelectric, mechanical methods etc. are not acceptable.

3.2.12.5 PMI Procedures

A. The VENDOR performing PMI shall submit a PMI testing procedure for approval by the BUYER. This specification shall be met as a minimum.

B. The VENDOR performing the PMI testing shall comply with the manufacturer's recommendations when calibrating and/or verifying the test equipment performance. Calibration shall occur daily at the start of work if possible.

C. The BUYER's Inspector shall be allowed to witness any or all PMI testing.

3.2.12.6 Personnel and Qualifications

A. Personnel performing PMI testing shall be certified in the operation of the equipment and the test method used by completing a training course approved by the manufacturer of the PMI test equipment. Personnel qualifications shall include certification and be submitted for review and approval by the BUYER.

B. Personnel using PMI equipment shall calibrate and maintain equipment in accordance with the manufacturer's specification.

3.2.12.7 Acceptance Criteria

A. All materials shall meet the chemical composition percentages specified in the relevant ASME BPVC Section II Part D or ASTM material specifications as defined by the drawings. Alternatively, a match against the relevant reference spectra stored in the instrument, i.e. 316 stainless steel or 16Cr – 12Ni – 2Mo, is acceptable.

B. The testing results shall fall within the chemical range while allowing for the accuracy of the machine.

C. If testing leads to the potential rejection of a component then the component shall be rejected and replaced or analyzed with a more accurate method for acceptance.

D. Component replacements shall undergo PMI and conform to the acceptance requirements.
E. The BUYER shall be notified of all rejected items and the reason for rejection.
F. If a component is rejected, all items within the lot should be considered suspect. A more extensive inspection shall be performed on the lot.
G. All rejected material, items and welds shall be marked and segregated.
H. CMTRs or CoCs should not be considered a substitute to PMI testing.

3.2.12.8 Materials Identification

A. Alloy materials are to be identified by their alloy designation (i.e. ASTM description) or nominal composition.
B. PMI test locations shall be marked, preferably with low-stress stamp or semi-permanent paint applied to each item. The marker shall not contain additives such as aluminum, chlorides, sulfur, lead or zinc which may be detrimental to the material.

3.2.12.9 Documentation

A. The VENDOR shall record results and provide documentation on a PMI Report containing the following as a minimum:

- VENDOR name (fabricator)
- Specific job reference (PO#)
- PMI procedure(s) and revision used
- Testing date and location
- Testing personnel and company performing the tests
- Test equipment identification number or serial number
- Date of calibration of the alloy analyzer
- Recorded results of the tests for each item
- Material specification and grade
- Traceability (heat number and welding joint number)
- Number of items examined
- Documentation as described in API RP 578 Section 7.5.f and g.
- Signature and date of the VENDOR's representative assuring compliance to the requirements of this specification
- Signature and date by the BUYER's inspector verifying the review and acceptance of results

3.2.13 Pressure Testing

3.2.13.1 General

A. All piping shall be pressure tested in accordance with the requirements of the ASME B31.3 Code and this specification. All tests shall be documented by the VENDOR (refer to Appendix D).

B. VENDOR shall repair or replace any piping assembly that does not perform satisfactorily during BUYER's hydrostatic or pneumatic pressure tests as a result of defective workmanship by the VENDOR, or as a result of faulty materials supplied by the VENDOR.

3.2.13.2 Pretest Inspection

A. All lines shall be thoroughly flushed prior to pressure testing, and prior to any automated valves being installed or pressure tested to prevent/minimize weld slag or other foreign material from damaging the valve trim. Other in-line instruments should also be removed or valved off prior to flushing.
B. The VENDOR shall place the system on hold for witness and notify the BUYER in advance of when a piping system is ready for a pretest inspection.
C. The pretest inspection shall verify that all components in a piping system conform to the appropriate pipe material specification (e.g., material, wall thickness, valve numbers, valve ratings, flange ratings, etc.) and the latest revision of the appropriate P&IDs, and is ready for pressurization.
D. The BUYER's Inspector will inspect each piping system using a copy of Appendix B and subsequently notify the VENDOR of any problems that need to be corrected prior to pressure testing.
E. All joints shall be inspected by the BUYER's Inspector to ensure they have been assembled in accordance with the applicable Code and this specification. All joints shall be left uninsulated until testing has been completed if insulation is required.
F. All supports, shoes, guides and anchors shall be inspected by the BUYER's Inspector for proper type, installation and location. Spring supports shall also be inspected for correct cold setting, with the hot and cold settings permanently marked, and for freedom of spring movement. All springs shall be blocked in the cold location for pressure testing.
G. Pressure vessels, heat exchangers, prefabricated skid-mounted process units, pumps, compressors and the miscellaneous items listed on Appendix B shall be isolated from piping systems that will be pressure tested unless approved for testing within the system by the BUYER. All control valves shall be installed and included in the pressure test with valves in the open position.
H. If a block valve is used for isolating test sections, the differential pressure across the valve seat shall not exceed the rated seat pressure.
I. All plugs and caps shall be inspected by the BUYER's Inspector to ensure that they comply with the appropriate pipe material specification.
J. All check valves shall be inspected by the BUYER's Inspector to ensure they have been tagged for the purpose of identifying the status of flappers, balls or pistons. The tag shall indicate whether the internals have been removed, jacked open, or left unaltered.

3.2.13.3 Testing

A. Pressure testing personnel shall be qualified in accordance with the Shop Quality Control section of this document.

B. The Piping Line List specifies which piping systems are to be pressure tested, the test pressure, and the test media. All pressure testing shall be done hydrostatically unless otherwise specified.
C. The BUYER shall be notified in advance of shop testing, and the VENDOR shall place shop testing on hold for witness. All shop tests shall be documented with a test report and witnessed by the BUYER.
D. An initial service leak test is not permitted.
E. Vent and drain piping which is downstream of the last block valve and open to the atmosphere does not require pressure testing.
F. If there are in-line items (valves, sensors, relief valves, etc.) that are not designed for the test pressure replace items with a spool and test the whole pipeline. Decision shall be approved by the BUYER prior to testing.
G. The quality of a test fluid shall not be detrimental to the equipment or the pipe system materials. Approval by the BUYER shall be obtained before using any test fluid.
H. Water for testing equipment and piping containing austenitic stainless steel materials shall contain no more than 50-ppm chloride ion.
I. Pneumatic testing shall be done with compressed air or nitrogen when pneumatic testing is approved by the BUYER. Unless otherwise approved by the BUYER, pneumatic testing shall not be performed when any of the following conditions exist:
   - When the temperature of the piping system is less than 21°C (70°F).
   - The test pressure exceeds 110 psig.
   - The product of pressure (psig) times volume (cubic feet) exceeds 50,000.
J. Pressure gages and recorders shall be calibrated before tests. Pressure gages shall have a dial scale ≥ 4 ½ in. diameter, a range such that the test pressure is within 40% to 80% of the full scale and be calibrated within 2% at the full scale reading.
K. Unless otherwise approved by the BUYER, pressure testing shall not be performed when the temperature of test fluid is less than 4°C (40°F).
L. Filter elements and strainers that may have been installed shall be removed from the system prior to pressure testing.
M. Equipment appurtenances such as level bridles, etc., shall be tested separately when the equipment is excluded from pressure testing.
N. The VENDOR shall verify that the status of all pressure relieving devices is as specified per Appendix C, and that all components included in the test can withstand the test pressure.
O. Each pipe system shall be observed to ensure that all supports, including spring supports, are not overloaded due to weight of the test medium. All spring supports shall have factory-installed travel stops installed during pressure testing.
P. If insulation is required, the VENDOR shall immediately remove or dry out any insulation that becomes wet during pressure testing. Reinstallation of previously wet insulation is subject to BUYER approval.
Q. Piping that is free of leakage for the duration of the specified tests shall be accepted.
R. Test diagrams or isometric drawings shall identify the test parameters. The drawing shall show actual configuration of piping, valves, etc. of the test.

3.2.14 Pressure Testing of Fully Welded Systems

3.2.14.1 Where there is an inability to isolate a fully welded system for leak testing, temporary flanges may be welded and blind flanges installed or temporary weld caps may be welded to isolate the system. The system shall be hydrostatically tested. Upon successful testing in accordance with ASME B31.3, Para. 345, the temporary flanges or caps shall be cut off, and the ends shall be prepared, welded and piping system installed in accordance to this specification.

3.2.14.2 Other methods (e.g. test plugs or joints) to isolate the system are allowed, but the selected method shall fulfill all requirements of ASME B31.3 and be the most economical without damaging the pipe.

3.2.15 The final weld connecting piping systems or components (closure weld) which have been successfully tested in accordance with ASME B31.3 para. 345 need not be leak tested provided the weld is examined in-process in accordance with ASME B31.3 para. 344.7 and passes with 100% radiographic examination in accordance with ASME B31.3 para. 344.5 or 100% ultrasonic examination in accordance with ASME B31.3 para. 344.6. For "Safety Significant" closure welds, the in-process examination will include liquid penetrant or magnetic particle examination of the root pass [see ASME para. 344.7.1(e)]. Records of individual examinations are required.

3.2.16 Repair of Leaks and Defects

3.2.16.1 The VENDOR shall be responsible for repairing all leaks and the additional examination or tests required as a result of those leaks. Leaks shall be repaired as directed by the BUYER.

3.2.16.2 Defective joints shall be either removed or reworked as required by the BUYER.

3.2.16.3 Reworks shall be made in accordance with procedures approved by the BUYER.

3.2.16.4 Examination and/or inspection of a completed joint rework shall be as required for the original joint or by a BUYER approved alternate method which will ensure equal or greater soundness.

3.2.17 Restoration

3.2.17.1 After successful completion of pressure testing, all lines shall be flushed and completely drained.

3.2.17.2 Oil, gas, air and chemical piping which has been either flushed or hydrostatically tested shall be thoroughly purged with air or nitrogen and dried to the satisfaction of the BUYER.

3.2.17.3 All valves that were closed during pressure testing shall be opened to ensure proper drainage of the bonnet cavity. All valves shall be partially opened and closed during the flushing operation to flush foreign material out of the system.

3.2.17.4 Care shall be exercised in draining vessels and piping so as not to create a vacuum. All vents within a system shall be opened prior to draining. After piping systems and vessels are completely drained, all vents and drains, and all other internals which were opened prior to testing shall be closed.

3.2.17.5 All temporary blanks and blinds shall be removed, and all valves, orifice plates, expansion joints, instrumentation and short pieces of piping which have been removed shall be reinstalled with proper gaskets in place.

3.2.17.6 The VENDOR shall restore, if required, all valves after successful pressure testing. Restoration of valves shall include the removal of any jacks; reinstallation of flappers, balls and pistons; and the replacing of bonnet gaskets on valves that were disassembled. The VENDOR shall notify the BUYER prior to valve restoration so the BUYER may witness the restoration. The BUYER will sign the tag that was previously placed on the valve and indicate that valve is ready for operation.

3.2.17.7 After lines have been drained, temporary piping supports shall be removed. All restraining parts that were supplied with hangers and expansion joints for their protection when carrying the test loads shall be removed upon completion of the system test.

3.2.17.8 Flanged joints at which test blinds have been removed shall not be tested. Special length bolting and temporary gaskets shall be removed and replaced with line class bolts and gaskets.

3.2.17.9 Each system shall be connected to equipment where applicable and be ready for inspection. The terminal points of piping systems which are left for future connections shall be sealed with blinds or plugs.

3.2.18 Post-Test Inspection

3.2.18.1 The VENDOR shall place the system on hold for witness and notify the BUYER in advance of when a piping system is ready for post-test inspection.

3.2.18.2 The BUYER will inspect each piping system using Appendix D and subsequently notify the VENDOR of any problems that need to be corrected prior to operation.

3.2.18.3 The post-test inspection shall verify that a piping system has been flushed, dried, restored, and connected to the satisfaction of the BUYER, and is ready for operation.

3.2.18.4 Pressure relief valves, spring hangers and expansion joints shall be inspected by the BUYER's Inspector to see that all shipping spacers and shipping ties have been applied.

3.3 Field Quality Control

NOT USED

3.4 Adjusting and Cleaning

NOT USED

3.5 Demonstration

NOT USED

3.6 Protection

NOT USED

4.0 LIST OF APPENDICES

4.1 Appendix A – Supporting Document(s) Issued with this Specification

4.2 Appendix B – Piping Pre-Pressure Test Checklist

4.3 Appendix C – Status of Instruments During Pressure Test

4.4 Appendix D – Piping Pressure Test Checklist

Appendix A – Supporting Document(s) Issued with this Specification

Lists:	31269-16-LST-0001, Piping Line List
Drawings:	Piping Orthographic Drawings and Piping Isometric Drawings as indicated in purchase order

Appendix B – Piping Pre-Pressure Test Checklist

INSPECTION DATE _____

INSPECTED BY _____

PLANT _____ VENDOR _____

SYSTEM/LINE NO. _____ DWG REF. _____

		BUYER				VENDOR		
		(Initials)		Date		(Initials)		Date
1.	All material/equipment (valve numbers, nipple schedules, flange ratings, etc.) complies with specifications and Piping and Instrumentation Diagrams							
2.	All threaded connections, flange bolting, gaskets, and socket welds correctly installed							
3.	All PWHT completed and acceptable							
4.	All NDE (hardness, MT, PT, RT, UT) acceptable							
5.	Instrumentation protected/secure							
6.	Rotating equipment internals protected/secure							
7.	Expansion joints, relief valves, orifice plates, meters, control valves, filter elements, internal refractories, and other special items protected/ secured							
8.	Vents installed at system high points.							
9.	Gages calibrated and installed.							
10.	Status of check valve internals has been tagged							
11.	Blinds correctly installed.							
12.	Temporary plugs and caps have been replaced							
13.	Low point drains are installed as needed.							
14.	All welded attachments have been installed and accepted							
15.	Instrument status in compliance with Appendix C							

REMARKS

_____

_____

_____

Appendix C – Status of Instruments During Pressure Test

	Block & Vent	Remove	Blind Off	Include in Test	Refer to Notes
Analyzers		X			
Control Valves				X	
Flame Arrestors		X			2
Flow Indicating Switches-Bellows Types		X			
Flow Instruments-D/P Cell & Bellows Type	X				
Flow Instruments-Rotameters		X			2
Flow Meters-Positive Displacement Type			X		2
Flow Meters-Turbine Type		X			2
Flow Switches-Vane Type		X			
Gage Glasses	X				
Level Instruments-Displacer Type		X			
Level Instrument-D/P Cell & Bellows Type	X				
Level Switches-Float Type		X			
Orifice Plates		X			4
Pressure Gages	X				
Pressure Instruments-All Types	X				
Pressure Regulators		X			
Pressure Switches	X				
PSV's		X			2
PSV's-3/4" and 1" Screwed		X			2
Rupture Discs		X			
Steam Traps		X			2
Thermowells				X	

NOTES:

1. All instruments shall be protected from damage due to freezing. In preparation for cold weather and during cold weather all instruments must be drained and process lead lines blown out with air or nitrogen.
2. Fabricate and install temporary spool if necessary for test.
3. Caution - do not overpressure instrument. Check with Instrument Engineer for maximum test pressure allowed by manufacturer.
4. Install after pressure testing and line flushing.

Appendix D – Piping Pressure Test Checklist

INSPECTION DATE _____

INSPECTED BY _____

PLANT_____ VENDOR_____

SYSTEM/LINE NO. _____ DWG REF. _____

TEST MEDIUM (INCLUDING PPM CHLORIDE) _____

TEST PRESSURE, PSIG _____ TEST TEMP, °F _____

TEST GAGE _____ TEST GAGE PRESSURE, PSIG _____

CALIBRATION DUE DATE _____ AMB TEMP / TIME OF DAY / TEST DURATION _____

	BUYER		VENDOR	
	(Initials)	Date	(Initials)	Date
1. Pressure Test Complete and acceptable	_____	_____	_____	_____
2. Test boundary sketch with ID of any joints not tested attached.	_____	_____	_____	_____
3. If partial tests were made, define:	_____	_____	_____	_____
a. _____	_____	_____	_____	_____
b. _____	_____	_____	_____	_____
c. _____	_____	_____	_____	_____
d. _____	_____	_____	_____	_____
4. System ready for post-test check.	_____	_____	_____	_____
a. Test blinds removed.	_____	_____	_____	_____
b. Final line flush complete.	_____	_____	_____	_____
c. Vents properly plugged.	_____	_____	_____	_____
d. Drains properly valved and plugged.	_____	_____	_____	_____
e. Instruments properly installed.	_____	_____	_____	_____
f. Expansion joints, relief valves, control valves, in-line meters, filter elements orifice plates, in-line strainers, and other special items properly installed.	_____	_____	_____	_____
g. Rotating equipment properly in-line.	_____	_____	_____	_____
h. Temporary supports removed.	_____	_____	_____	_____

REMARKS

_____

_____

SPECIFICATION

16-2-004

FIELD FABRICATION AND INSTALLATION OF PIPING

AECOM ATKINS AREVA

LOW ACTIVITY WASTE PRETREATMENT SYSTEM

Project No. 31269 (T5L01)

Document No. 16-2-004

CSI Section 40 05 05.22

Safety Related ☒ Non-Safety Related ☐

FIELD FABRICATION and INSTALLATION of PIPING

Prepared for

Washington River Protection Solutions, LLC

Revision: 0 Status: Final

MATTHEW SEAN JEND
STATE OF WASHINGTON
54709
REGISTERED
PROFESSIONAL ENGINEER

5/17/17

FOR PERMITTING
5/17/17

AECOM ATKINS AREVA

Project Number: 31269 (T5L01)
Doc. No.: 16-2-004
Date: May 17, 2017
Revision: 0

REVISION PAGE

Project Name:	LAWPS	Discipline:	Piping
Client:	Washington River Protection Solutions	Project Number: 31269 (T5L01)	
		Latest Revision: 0	

REVISION SIGNATURES

G. Jones	5/17/17	M. Jend	5/17/17
Prepared by	Date	Approved by (SDE/Lead)	Date
J. Jackson	5/17/17	P. Bell	5/17/17
Checked by	Date	Approved by (QA)	Date
M. Quintana	05/17/17	D. Priebe	5/17/17
Verified by (if required)	Date	Approved by (PEM)	Date

Status	Rev. No.	Date	Prepared By	Pages	Description of Changes
Final	0	5/17/17	G. Jones	45	Approved for Construction

Safety Related Yes ☒ No ☐	Quality Level Full QA ☒ Enhanced QA ☐ Commercial QA ☐

TABLE OF CONTENTS

1.0 PART 1 - GENERAL 1
1.1 Section Scope 1
1.2 Related Sections 2
1.3 Codes and Standards 2
1.4 System Descriptions 3
1.5 Submittals 4
1.6 Delivery, Storage & Handling 6
1.7 Quality Assurance 7
1.8 Site Conditions 9

2.0 PART 2 - PRODUCT 10
2.1 Manufacturers 10
2.2 Materials 10
2.3 Equipment 10
2.4 Components 10
2.5 Fabrication 10
2.6 Shop Quality Control 14

3.0 PART 3 - EXECUTION 15
3.1 Preparation 15
3.2 Erection, Installation & Application 15
3.3 Field Quality Control 25
3.4 Adjusting and Cleaning 27
3.5 Demonstration 27
3.6 Protection 27

4.0 LIST OF APPENDICES 28
4.1 Appendix A – Supporting Document(s) Issued With This Specification 28
4.2 Appendix B – Piping Pre-Pressure Test Checklist 28
4.3 Appendix C –Status of Instruments During Pressure Test 28
4.4 Appendix D – Piping Pressure Test Checklist 28
4.5 Appendix E – Requirements for Underground Piping 28

LIST OF TERMS

Abbreviations and Acronyms

Term	Definition
API	American Petroleum Institute
ASME	American Society of Mechanical Engineers
ASTM	ASTM International
AFC	Approved for Construction
AWS	American Welding Society
BPVC	Boiler & Pressure Vessel Code
CoC	Certificate of Compliance
CMTR	Certified Material Test Report
CGD	Commercial Grade Dedication
CQA	Commercial Quality Assurance
CWI	Certified Weld Inspector
DCN	Design Change Notice
ECN	Engineering Change Notice
EQA	Enhanced Quality Assurance
FQA	Full Quality Assurance
ID	Identification
LAWPS	Low Activity Waste Pretreatment System
MT	Magnetic Particle Testing
NCR	Nonconformance Report
NDE	Nondestructive Examination
P&ID	Process & Instrumentation Drawing
PFI	Pipe Fabrication Institute
PMI	Positive Material Identification
PPM	Parts Per Million
PQR	Procedure Qualification Record
PT	Liquid Penetrant Testing
PVC	Polyvinyl Chloride
PWHT	Post Weld Heat Treatment
RFI	Request for Information
RT	Radiographic Testing

Term	Definition
UT	Ultrasonic Testing
WPS	Weld Procedure Specifications
WQTR	Welder Qualification Test Records
XRF	X-Ray Fluorescence

Units

°C	Degree Celsius
°F	Degree Fahrenheit
In	Inch
ppm	Parts Per Million

Definitions

BUYER – The company for whom the VENDOR is performing work or services.

COMMERCIAL QUALITY ASSURANCE (CQA) - Level of controls for those items, services, or processes where, based on an evaluation of risk or nuclear safety, no additional quality controls beyond the provider's published or stated attributes of the item, service, or process is required.

DESIGN CHANGE – Within the context of this specification, a DESIGN CHANGE is technically equivalent to a SUBSTITUTION (see SUBSTITUTION). However, the term DESIGN CHANGE may be used to refer to more significant changes to the design compared to a simple substitution.

DEVIATION – Any departure from the requirements contained in the purchase order and specification which VENDOR proposes to incorporate if approved by BUYER.

ENHANCED QUALITY ASSURANCE (EQA) - Level of controls for those items, services, or processes where, based on an evaluation of risk or nuclear safety, additional controls beyond the provider's published or stated attributes of the item, service, or process are needed to verify critical attributes.

FULL QUALITY ASSURANCE (FQA) - Level of controls applied for items services, or processes that are commensurate with the controls invoked under ASME NQA-1 or other appropriate national consensus standard.

HANDLING - The movement or transportation of items following receipt from offsite/ project locations. This includes movement within storage areas and movement/transportation from receipt or storage areas to field locations. Handling requirements include the need for special handling tools and equipment, restrictions on material composition of surfaces in contact with the item, protection against damage or deterioration, which could occur during movement and placement, protection against physical damage due to excessive shock or vibration, and protection against entry of dirt, water, or other contaminants.

HOLD POINT – A mandatory inspection activity beyond which work shall not proceed until (1) the inspection is performed by an independent inspector and/or BUYER and acceptance is authenticated, or (2) a written release is authorized by the organization who established the hold point.

MANUFACTURER – The party responsible for making the metallic piping.

MORE CONSERVATIVE – "More conservative" shall be interpreted as "more protective of the health, safety and well-being of Site workers and facilities, the public, and environment, as applicable."

NONCONFORMANCE – A deficiency in characteristic, documentation, or procedure that renders the quality of an item or activity unacceptable or indeterminate.

PRESSURE-CONTAINING COMPONENTS – Items that form the pressure-containing envelope of the piping system.

PROCUREMENT QUALITY CLAUSES (QA CLAUSES) - Procurement quality clauses are to be used for the acquisition of items and services. The clauses establish contractual obligations for quality program systems, identification, traceability, documents submittals, testing, reporting, qualification, special process controls, inspections, etc.

PRODUCT DATA – Printed information including, but not limited to, catalog cuts, color charts, illustrations, diagrams, templates, performance curves, brochures, and other forms of Product literature.

QUALITY ASSURANCE RECORDS – Quality assurance plans, procedures, and records, including completed documents that furnish evidence of the quality of an item or activities affecting quality.

SHALL / MUST – Denotes project requirements, compliance is required

SHIPPING – The movement of items from an off-site/project location (VENDOR, warehouse, etc.) to an on-site/project location, or movement from an onsite/ project location to an off-site/project location. Shipping requirements include packaging and securing of items to protect against damage or deterioration which could occur during movement and transportation, protection against physical damage due to excessive shock or vibration, protection against entry of dirt, water, or other contaminants, and protection against other environmental conditions such as temperature or humidity.

SHOULD – Denotes recommendation or expectation, compliance is expected.

SPECIFICATION – Refers to any design, fabrication or supply specification.

SUBSTITUTION – Any change or deviation from issued approved drawings, designs, methods, or contract terms and conditions. Changes in products, materials, equipment, methods of construction, and test criteria required by the Contract Documents proposed by the VENDOR after award of the Contract are considered to be requests for substitution.

STORAGE – Holding of items in areas that address: the probable maximum period to be held, the inherent physical limitations of the item itself, and required protection from potential hazards such as fire, corrosion, chemical attack and environmental conditions. Storage also includes the requirements for maintaining the integrity and operability of items through routine maintenance, cleaning, or other means of preservation.

VENDOR – The Company responsible for the supply of equipment or services.

WITNESS POINT – An inspection activity beyond which work shall not proceed until an inspector and/or BUYER is notified and (1) the inspection is performed and released, or (2) the inspection is deferred and can be completed at a later time, or (3) a written waiver is issued by the organization who established the witness point.

1.0 PART 1 - GENERAL

1.1 Section Scope

1.1.1 This specification covers the minimum requirements for:

1.1.1.1 The furnishing, receiving, handling, storing, fabricating, assembling, erecting, cleaning, filling, flushing, examining, testing and restoring of carbon and stainless steel field fabricated piping for safety and non-safety related piping systems shown on the drawings or otherwise specified.

1.1.2 This specification excludes:

1.1.2.1 Requirements for the fabrication of remotely maintainable piping jumpers and connections. See TFC-ENG-STD-22 "Piping, Jumpers, and Valves" for jumper fabrication requirements.

1.1.2.2 Any special requirements for the fabrication of double containment piping. See CSI Section 40 05 23.23 "Double Containment Piping for Waste Transfer" for double containment piping requirements.

1.1.2.3 Requirements for shop and module fabrication, erection and testing of piping. See CSI Section 40 05 05.11 "Shop and Module Piping Fabrication and Installation" for piping shop and module installation requirements.

1.1.3 This specification shall be used in conjunction with ASME B31.3 and other referenced codes and standards.

1.1.4 The BUYER shall be advised immediately in writing of any conflicts as soon as they are identified.

1.1.5 No material substitutes or deviations shall be made to this specification without written approval from the BUYER. All substitutions and deviations shall be submitted to the BUYER for resolution via the Request for Information (RFI) process in accordance with CSI Section 01 25 00 "Substitutions and Design Changes". If differences exist between the drawings, the specifications, or the referenced codes and standards, the BUYER shall be contacted to resolve the conflict. The BUYER's final resolution shall govern.

1.1.6 The VENDOR's work shall include the fabrication and installation of all loose piping furnished with equipment once the Certified Material Test Reports (CMTRs) are reviewed by the BUYER.

1.1.7 The VENDOR will be furnished copies of isometric drawings prepared by the BUYER's Engineer.

1.1.8 The VENDOR's work shall keep drawings current and updated with any BUYER approved field changes that may be required, and shall supply as-built drawings to the BUYER upon completion of the job.

1.2 Related Sections

01 25 00	Substitutions and Design Changes
01 33 00	Submittals
01 40 00	Quality Assurance
01 60 00	Labeling
01 66 00	Delivery Storage and Handling
31 23 00	Excavating, Backfilling and Compacting for Underground Utilities
40 05 00	Piping, Fittings and Flanges
40 05 00.11	Piping Materials Specification
40 05 51	Piping Valves Specification
40 05 05.11	Shop and Module Piping Fabrication and Installation
40 05 05.33	Pipe Welding
40 05 23.23	Double Containment Piping for Waste Transfer
40 42 00	Thermal Insulation of Piping, Vessels and Equipment Specification
40 46 00	Piping Protective Coatings
TFC-ENG-STD-22	Piping, Jumpers and Valves

1.3 Codes and Standards

1.3.1 Work shall be performed in accordance with the referenced codes, standards and documents for this specification.

1.3.2 The following documents, of the exact issue shown, form a part of the basis of design to the extent specified in the applicable sections of this document and establish the Codes of Record. In the event of a conflict between documents referenced herein and the requirements of this specification, the requirements of this specification shall take precedence only when this specification's requirements are more stringent or conservative. If the Code date is not defined, apply the latest Code as of April 16, 2015.

1.3.3 Government Documents

1.3.3.1 Occupational Safety and Health Administration (OSHA)

A. 29 CFR 1910

1.3.4 Non-Government Documents

1.3.4.1 American Petroleum Institute (API)

A. API RP 578 (2010); *Material Verification Program for New and Existing Alloy Piping Systems*

1.3.4.2 American Society of Mechanical Engineers (ASME)

A. ASME B1.20.1 (2013); *Pipe Threads, General Purpose (Inch)*
B. ASME B16.9 (2012); *Factory-Made Wrought Buttwelding Fittings*
C. ASME B31.3 (2012); *Process Piping*
D. ASME B36.10M (2004); *Welded and Seamless Wrought Steel Pipe (Reapproved 2010)*
E. ASME B36.19M (2004); *Stainless Steel Pipe (Reapproved 2010)*
F. ASME Boiler and Pressure Vessel Code, Section II Part D (2013); *Material Properties (Customary)*
G. ASME Boiler and Pressure Vessel Code, Section IX (2013); *Welding, Brazing, and Fusing Qualifications: Qualification Standard for Welding, Brazing, and Fusing Procedures; Welders; Brazers; and Welding, Brazing, and Fusing Operators*
H. ASME Boiler and Pressure Vessel Code, Section V (2013); *Nondestructive Examination*
I. ASME NQA-1 (2008/2009A); *Quality Assurance Requirements for Nuclear Facility Applications*

1.3.4.3 American Welding Society (AWS)

A. AWS A2.4 (2012); *Standard Symbols for Welding, Brazing, and Nondestructive Examination*

1.3.4.4 ASTM International (ASTM)

A. ASTM A380/A380M (2013); *Standard Practice for Cleaning, Descaling, and Passivation of Stainless Steel Parts, Equipment, and Systems*
B. ASTM D2774 (2012); *Standard Practice for Underground Installation of Thermoplastic Pressure Piping*

1.3.4.5 Guideline for Sampling in Commercial-Grade Item Acceptance Process, EPRI, Palo Alto, CA: 1999. Report TR-017218-R1.

1.3.4.6 Manufacturers Standardization Society (MSS)

A. MSS SP-58 (2009); *Pipe Hangers and Supports – Materials, Design, Manufacture, Selection, Application, and Installation*

1.3.4.7 Pipe Fabrication Institute (PFI)

A. PFI ES-3 (2009); *Fabricating Tolerances*
B. PFI ES-5 (2013); *Cleaning of Fabricated Piping*
C. PFI ES-24 (2013); *Pipe Bending Methods, Tolerances, Process and Material Requirements*

1.4 System Descriptions

NOT USED

1.5 Submittals

1.5.1 Submittals that are listed within this section shall be prepared and processed in accordance with requirements of CSI Section 01 33 00 "Submittals" and shall include all of the required Quality Assurance documentation in accordance with CSI Section 01 40 00 "Quality Assurance."

1.5.2 Requests for Information (RFI) shall be submitted on form A-6003-417 (provided by BUYER).

1.5.3 Final Data Package submittal items listed in section 1.5.6 through 1.5.27 below shall be submitted by the VENDOR and approved by the BUYER upon completion of work.

1.5.4 Design Codes and standards including revision and/or issue date shall be provided by the VENDOR.

1.5.5 A quality system for materials specifying testing per ASME shall be provided in accordance with QA Clause B10.

1.5.6 Calibration certificates for VENDOR owned test instruments and measuring tools that will be used during fabrication, inspection, and testing in accordance with QA Clause B12.

1.5.7 A fabrication, inspection, and test plan, including a cleaning procedure, shall be provided (for inspections and tests specified in this specification) in accordance with QA Clause B13.

1.5.8 Nonconformance documentation and reports (NCR) shall be provided in accordance with QA Clause B22.

1.5.9 Certified Weld Inspector (CWI) records shall be provided in accordance with QA Clause B25.

1.5.10 Welding Procedure Specifications (WPS), Procedure Qualification Records (PQR) and Welder Qualification records shall be provided in accordance with QA Clause B28. Procedures as well as welder continuity records shall be qualified in accordance with ASME B31.3, Para. 328.2 and ASME Boiler & Pressure Vessel Code (BPVC) Section IX Form QW-482, as applicable.

1.5.11 Bending procedures, which includes forming temperatures, procedures for heat treatment after bending and inspection procedures, shall be submitted by the VENDOR prior to fabrication.

1.5.12 An outline of welding, heat treatment and nondestructive examination (NDE) procedures shall be included for each pipe material class. The outline shall follow the format of CSI Section 40 05 05 .33 "Pipe Welding", Appendix B - Weld Procedure Log for Piping or a BUYER pre-approved substitute.

1.5.13 NDE process, NDE personnel, and Records of Annual Vision Tests shall be provided in accordance with QA Clause B31. NDE includes the following:

1.5.13.1 Nondestructive inspection reports and evaluations of radiographic film, magnetic particle examinations, ultrasonic examinations, visual examinations and any other examinations performed by the VENDOR.

1.5.13.2 Radiographic evaluations shall show date, line number, weld identification number, developed (exposed) radiographic film originals and other pertinent information (i.e., image quality indicators, penetrometers, etc.) for each weld radiographed.

1.5.13.3 Minimum wall thickness measurements, including sampling plan, reports containing each heat/lot along with sample results per the Field Quality Control section of this document.

1.5.13.4 Hydrostatic/Pneumatic/PMI Test personnel Qualifications

1.5.14 All components shall be identified and traceable in accordance with QA Clause B37.

1.5.15 Liquid Penetrant Material Certification shall be provided in accordance with QA Clause B46.

1.5.16 Certified Material Test Reports (CMTR's) shall be provided for all metallic components that provide containment in accordance with QA Clause B49.

1.5.17 The following inspections and test reports shall be provided in accordance with QA Clause B52:

1.5.17.1 Weld inspection and NDE inspection reports

1.5.17.2 Weld maps and weld history

1.5.17.3 Weld gas certificates of analysis - % purity

1.5.17.4 Records of PWHT for welds, including temperature charts identifying each piece number and line number, set point temperature and holding time, a description of the equipment used, and calibration dates of thermocouples and the recorder.

1.5.17.5 Record of joint repairs (including date, extent of repairs, and responsible individual)

1.5.17.6 Cleaning and inspection of cleaning reports, including:

A. Date and name of VENDOR and responsible individual.
B. Inspection or examination records.
C. Cleaning methods.
D. Certification of visual examination for surface preparation, surface profile, materials.
E. A ppm halogen content test analysis.

1.5.17.7 Final inspection reports including critical dimension verification and weight

1.5.17.8 PMI reports and documentation

1.5.17.9 Fastener torque records

1.5.17.10 Pressure test records (Including purge dam control procedure)

A. Purge dam control procedure which shall include the prohibition of dissolvable purge dam material for pneumatically flushed piping systems and shall include methods to assure removal of all purge dams.

1.5.18 Final fabrication travelers shall be provided for each component.

1.5.19 All piping components furnished by the VENDOR shall conform with QA Clause B70.

1.5.20 High strength graded fasteners shall be controlled in accordance with QA Clause B73.

1.5.21 Certification against the procurement of potentially suspect or counterfeit items (i.e. all supplied materials shall be genuine, new and unused), in accordance with QA Clause B76.

1.5.22 Certificates of Conformance (CoC) shall be provided for each item, including weld rod/filler material and anchor plates, on the purchase order in accordance with QA Clause B79, except for CGD FQA items which shall be in accordance with QA Clause B80.

1.5.23 For Safety (FQA) items, the VENDOR shall meet the requirements of the BUYER's Commercial Grade Dedication (CGD) plan or be NQA-1 qualified.

1.5.24 Copies of waivers granted by the BUYER to deviate from requirements of the purchase order or this specification shall be included with the piping materials at shipment.

1.5.25 VENDOR shall submit technical data sheets and Safety Data Sheets (SDS) for non-metallic components such as gasket, elastomer seals, sealants, desiccants, surface coatings and lubricants for any and all such materials being provided, in accordance with QA Clause B33. Identification of age control items shall be in accordance with QA Clause B43. Gasket and seal reports shall be in accordance with the Field Quality Control section of this specification.

1.5.26 VENDOR shall include approved design changes (Engineering Change Notice's (ECN's) and Design Change Notice's (DCN's)) in the final data package.

1.5.27 VENDOR shall submit as-built drawings.

1.6 Delivery, Storage & Handling

1.6.1 Refer to related CSI Section 01 66 00 "Delivery, Storage and Handling" for general delivery, storage and handling related requirements in addition to the requirements of this section.

1.6.1.1 All materials shall be handled and stored in a manner that will minimize carbon containment (in the case of stainless steel), corrosion and prevent damage to pipe and piping components including their end connections. VENDOR shall submit their procedure for issuance and storage of welding filler material to the BUYER for review and approval.

1.6.1.2 Weld preps and flange faces shall be protected with covers that will prevent damage to the weld preps and flange faces during handling.

1.6.1.3 All threaded connections shall be plugged or capped with metal or plastic thread protectors.

1.6.1.4 All other covers shall be either wood or plastic bolted, snapped or wired on covers.

1.6.1.5 Self-fastening plastic covers are acceptable.

1.6.1.6 Covers or caps containing fluorides, chlorides, sulfur, lead, zinc, copper and mercury are not allowed on stainless steel piping ends or flange faces.

1.6.1.7 Protect uncoated ends of carbon steel piping.

1.6.1.8 If plugs or caps are shown on the piping drawings, all plugs, caps and temporary plugs or caps shall meet the requirements of the piping drawing.

1.6.1.9 Pipe nipples and other slender branches shall be temporarily braced and blocked to prevent damage during handling.

1.6.1.10 Valves, expansion joints, hangers, traps, flow orifices and other similar specialty items shall be handled and stored in accordance with the manufacturer's recommendations and with the aid of lifting lugs when provided by the manufacturer. When these piping components must be stored outdoors, they shall be stored on wooden pallets and covered with black polyethylene sheeting to the satisfaction of the BUYER.

1.6.1.11 Pipe shall be supported with cribbing as necessary to comply with CSI Section 01 66 00 requirements.

1.6.1.12 Special piping (e.g., PVC, CPVC, polyethylene, fiberglass, stainless steel, etc.) materials shall be handled and stored in accordance with the manufacturer's recommendations.

1.6.2 The following requirements supplement the requirements in CSI Section 01 60 00 "Labeling":

1.6.2.1 All material specified with a tag number shall be furnished with both nameplates and identification tags.

1.6.2.2 Piping component nameplates shall be fully visible when the equipment is in an operating condition. Nameplates shall include the manufacturer's name, figure number, serial number, size and pressure class (if applicable).

1.6.2.3 Identification tags shall be permanently attached and shall be stamped with the applicable tag number. The tags shall be of 28 gauge stainless steel and attached with 28 gauge braided stainless steel wire and a meter seal or similar wire holding device. The characters on the stamp shall be a minimum of 3/16-inch height. Location of tag shall not interfere with the installation or operation of the equipment.

1.7 Quality Assurance

1.7.1 Applicable Procurement Quality Clauses are summarized in the table below. The full QA Clause definition and associated requirements are located in CSI Section 01 40 00.

Table 1.7.1-1 Procurement Quality Clause

SUPPLIER FABRICATION
B10 Quality System for Materials Specifying Testing Per ASME
B12 Supplier Use of Calibrated Equipment
B13 Fabrication/Inspection/Test Plan
B22 Nonconformance Documentation and Reporting
B25 Certified Weld Inspector (CWI)
B28 Welding Procedures and Qualifications
B31 Nondestructive Examination Process
MATERIAL IDENTIFICATION
B33 Identification of Items with Catalog Cut
B37 Identification and Traceability of Items
B43 Identification of Age Control Items
TESTING AND TEST DATA
B46 Liquid Penetrant Material Certification
B49 Certified Material Test Report
B52 Inspection and Test Report
INSPECTION AND ACCEPTANCE CRITERIA
B70 Supplier Furnished Items
B73 Control of Graded Fasteners
B76 Procurement of Potentially Suspect or Counterfeit Items
B79 Certificate of Conformance
B80 Certificate of Conformance for Commercial Grade Surveyed Procurements

1.7.2 There are multiple quality assurance levels applied within this document. The varying quality levels are identified in the Piping Line List, 31269-16-LST-0001, by line number.

1.7.2.1 For Commercial Quality Assurance (CQA) level items and Enhanced Quality Assurance (EQA) level items all requirements addressed within this specification apply with the exception of "Safety Significant" labeled requirements.

1.7.2.2 For Full Quality Assurance (FQA) level items additional requirements such as cleaning, torqueing, PMI, wall thickness, and gasket and seal verification are addressed within this specification and labeled as "Safety Significant". The VENDOR shall meet the applicable basic requirements of ASME NQA-1.

1.7.3 Hold Points

1.7.3.1 The following verification points required by this section shall be in accordance with CSI Section 01 40 00 and verified by the BUYER, as applicable.

1.7.3.2 At a minimum, the following witness and hold points shall apply:

Table 1.7.3.2-1 Hold Point Verification

Verification Point Description	Type of Verification
Prior to Fabrication	H
Prior to Initial Production Welding (First Weld*)	H
Prior to Field Bends	H
Prior to Testing	W
Prior to Inspections	W
Prior to Acceptance Testing	N/A

*First Weld Strike for Each Weld Procedure

(H) Hold,
(W) Witness

1.7.3.3 The VENDOR shall provide required notifications of verification points in accordance with CSI Section 01 40 00 as applicable, and shall not proceed past required hold points and witness points without written authorization from the BUYER QA representative.

1.8 Site Conditions

1.8.1 Refer to CSI Section 01 66 00 Site Conditions section.

2.0 PART 2 - PRODUCT

2.1 Manufacturers

NOT USED

2.2 Materials

2.2.1 All piping component material shall be furnished new and in accordance with the requirements stated in the applicable pipe material classes found in CSI Section 40 05 00.11 "Piping Materials Specification" under the rules of ASME B31.3 and in conjunction with CSI Section 40 05 00 "Piping, Fittings and Flanges" and CSI Section 40 05 51 "Piping Valves Specification".

2.3 Equipment

NOT USED

2.4 Components

NOT USED

2.5 Fabrication

2.5.1 Segregation of carbon steel and stainless steel shall be maintained throughout the welding and fabrication process. Tools used for fabrication of carbon steel weldments shall not be used for stainless steel fabrication. Keep piping systems clean and dry. Upon the commencement of fabrication, plug or cap ends of piping when fabrication is not in progress.

2.5.2 Threaded Joints

2.5.2.1 All threaded pipe joints shall be tapered and conform to ASME B1.20.1, and shall be made up to insure adequate thread engagement.

2.5.2.2 Threaded joints which will not be seal-welded shall be made up using joint lubricant and sealant. Threaded joints which are to be seal-welded shall be made up without thread lubricant.

2.5.3 Welded Joints

2.5.3.1 All welding shall be performed in accordance with ASME B31.3, CSI Section 40 05 05.33 "Pipe Welding" and the requirements of this specification.

2.5.3.2 The Weld Procedure Log in CSI Section 40 05 05.33 shall be completed by the VENDOR.

2.5.3.3 All welding under this specification shall be placed on hold until the WPSs, PQRs and Welder Qualification Test Records (WQTRs) have been approved by the BUYER's Engineer.

2.5.3.4 Longitudinal seams in adjoining lengths of welded pipe shall be staggered and located so that they will not intersect openings and external attachments.

2.5.3.5 When thermal cutting is required, the material shall be preheated in accordance with the BUYER approved welding procedure and the welding preheat requirements of ASME B31.3. Thermal cut surfaces shall be ground to remove all slag, oxide and surface irregularities. Austenitic stainless steel pipe shall be cut by mechanical means only, unless permitted in writing by the BUYER.

2.5.3.6 Where seal welds are specified on either the drawings or within this specification for threaded joints, care shall be taken to ensure that the threads are free of dirt, cutting oil, grease and sealant. After the joint has been tightened to full thread engagement, seal welding shall cover all exposed threads. Seal welding shall be done with filer metals electrodes not to exceed 1/8-in. in diameter.

2.5.3.7 Seal welding is required for services subject to vibration and pulsation, such as process piping at reciprocating pumps and compressors, vacuum, and flammables and toxic services.

2.5.3.8 Seal weld the upstream side only of first block valve for instrumentation, such as pressure gauges and orifice taps, and in piping connected to an open (atmospheric) system, such as a vent, drain, sample connection and hose station. Seal weld hydrostatic test plugs which will be covered with insulation.

2.5.4 Refer to CSI Section 40 05 05.33 regarding requirements for the repair of weld defects.

2.5.5 Surface Finish

2.5.5.1 Repair of base metal shall be allowed only with prior written authorization by the BUYER.

2.5.5.2 The VENDOR shall be responsible for surface finish after the repair of weld defects. Remove all weld splatter, sharp edges, corners, projections, pits, scratches, or other sharp depressions and surface irregularities.

2.5.5.3 The surfaces shall be ground if necessary, to eliminate irregularities that can inhibit the interpretation of imperfections.

2.5.5.4 Blend grinding is permitted as long as the metal wall thickness is not reduced to less than that permitted in the applicable ASTM standard, without BUYER's approval. Repairs shall be made in accordance with the qualified welding procedures with PWHT as required per ASME B31.3.

2.5.6 Fabrication Tolerance and Alignment

2.5.6.1 Unless otherwise specified, dimensions of all fabricated piping shall be within the tolerances specified in Pipe Fabrication Institute (PFI) Standard ES-3 and the BUYER's Drawings.

2.5.6.2 All piping shall be plumb and square. Unless otherwise specified, the internal misalignment of ends to be joined shall not exceed the lesser of 1/16 in. Where misalignment exceeds the permitted misalignment, the end of the thicker pipe shall be bored in accordance with Paragraph 328.4.2(b)(1) and 328.4.3 of ASME B31.3.

2.5.6.3 Templates, pantographs, or other suitable methods shall be used in laying out stub-ons, laterals, and other irregular details to ensure accurate cutting and proper fit-up. Caution shall be used in fitting up pipe and components for tack welding, to ensure a proper gap for full-penetration welds.

2.5.6.4 Unless otherwise specified, bolt holes of fixed flanges shall be oriented as follows:

A. Vertical flange faces: A pair of bolt holes shall straddle the vertical centerline.
B. Horizontal flange faces: A pair of bolt holes shall straddle the plant north/south centerline.
C. Sloping flange faces: A pair of bolt holes shall straddle the plane defined by the centerline of the pipe and a vertical line.

2.5.6.5 Slip-on flanges shall be double-welded and positioned as shown in Figure 328.5.2B of ASME B31.3. The fillet weld shall be applied so that the flange does not require re-facing.

2.5.7 The internal surface of welds between the orifice flanges and the connecting pipe shall be ground smooth.

2.5.8 Branch Connections and Miscellaneous Attachments

2.5.8.1 All connections for branches, vents, drains and instruments are specified in each pipe material class found in CSI Section 40 05 00.11.

2.5.8.2 The VENDOR shall install thermowells per detail drawings in each applicable pipe material class.

2.5.8.3 Insulation supports (nuts) shall be welded to vertical piping 10 in. and larger that will be insulated in the field. Nuts shall be installed in accordance with Appendix B of CSI Section 40 42 00 "Thermal Insulation of Piping, Vessels and Equipment Specification".

2.5.8.4 Reinforcing pads and saddles, when used, shall be provided with tapped vent holes that are suitable for pneumatic testing.

2.5.8.5 Reinforcement pads and saddles specified in the pipe material classes or shown on the drawings shall be fabricated to meet the requirements of ASME B31.3.

2.5.8.6 Miscellaneous attachments for hangers, supports or guides shall be of material similar to the pipe and be suitable for the operating temperature.

2.5.9 Pipe Bending and Forming

2.5.9.1 Pipe bending and forming shall conform to the requirements of PFI ES-24 and ASME B31.3.

2.5.9.2 Bends identified on the drawings shall be formed with the radii specified.

2.5.9.3 Pipe bends shall be checked for thinning at the mid-span of the bend, at the intrados, extrados, and bend centerline radius by the VENDOR. Resultant wall thickness shall be equal to or greater than the minimum wall thickness per ASME B31.3.

2.5.9.4 All bends shall be placed on hold and approved by the BUYER prior to commencement of fabrication, and the VENDOR shall submit a bending procedure which includes forming temperatures, procedures for heat treatment after bending and inspection procedures.

2.5.9.5 Tolerances for dimensions of pipe bends shall be in accordance with PFI ES-24.

2.5.9.6 All bends shall be induction bent per Paragraph 332 of ASME B31.3. Where induction bends are not practical cold bends shall be utilized per Paragraph 332 and 304.2.1 of ASME B31.3. No alternates or substitutions will be allowed without prior written approval of the BUYER. Use methods and equipment that produce bends free of wrinkles, bulges or kinks.

2.5.9.7 Refer to the Field Quality Control section of this specification for examination requirements.

2.5.10 Heat Treatment

2.5.10.1 Preheating and PWHT of welding zones, bends and hot-formed sections shall be in accordance with ASME B31.3, CSI Section 40 05 05.33, and the requirements of this specification.

2.5.10.2 All fabricated piping shall be checked for dimensions and alignment after heat treatment and a gage check shall be made on the threads of couplings, thredolets, and nipples. Pipe shall also be checked for straightness. Deviation from a straight line shall not exceed 0.2 percent of the length.

2.5.10.3 After all hot bending, welding, grinding and heat-treating operations have been completed the threads shall be "chased" with the appropriate size pipe tap to remove scale and weld spatter, and to ensure full engagement of threads and a tight joint.

2.5.11 Cleaning and Painting

2.5.11.1 Internal Cleaning

A. All piping shall have all loose foreign material such as scale, sand, weld spatter particles, cutting chips, etc., removed from the inside of piping assemblies per PFI Standard ES-5. Cleaning solvents for stainless steel piping shall be non-halogenated solvents or water containing no more than 50-ppm chloride.

B. For "Safety Significant" piping systems, cleaning acceptance criteria shall be class C in accordance with ASME NQA-1, Part II, Subpart 2.1, Para. 302.3. Stainless steel parts shall be cleaned, de-scaled and passivated in accordance with ASTM A380.
C. Use new mechanical cleaning tools (e.g. grinding wheels or tools utilized for cleaning austenitic stainless steel or nickel alloys shall not be previously used on carbon steels). Wire brushes, steel wool or similar items or tools for conditioning and cleaning surfaces shall be made from 300 series stainless steel. Any stainless steel that's been iron contaminated shall be passivated.
D. Stainless steel components shall not be blasted with reclaimed sand or grit.
E. A cleaning procedure shall be submitted for approval before fabrication.
F. Visually examine cleaned system components and parts to verify cleanliness requirements are met and record results in a cleaning report.

2.5.11.2 Painting of External Pipe Surfaces

A. The VENDOR shall perform all surface preparations and coating application, unless otherwise specified, in accordance with CSI Section 40 46 00 "Piping Protective Coatings".
B. The design documents (i.e., Piping Line List, drawings) indicate those systems that require coatings.
C. Surface preparations and coating applications shall be in strict accordance with the coating manufacturer's recommendation and instruction. BUYER reserves the right to inspect surface preparations and coating applications at any time.
D. Chlorinated solvents shall not be used with stainless steel during the surface preparation process.
E. Coating shall not be applied to internal surfaces of pipe, threads, flange faces or within four inches of any expected field welds. These surfaces shall be wrapped prior to the application of coatings to protect them from overspray.

2.6 Shop Quality Control

NOT USED

3.0 PART 3 - EXECUTION

3.1 Preparation

NOT USED

3.2 Erection, Installation & Application

3.2.1 Each pipe spool, valve, threaded opening and gasket surface shall be closely inspected for damage and internal cleanliness immediately prior to installation of piping.

3.2.2 General

3.2.2.1 All piping shall be installed in accordance with the requirements of both ASME B31.3 and this specification.

3.2.2.2 All piping shall be installed in a neat, rectangular form. Special attention shall be given to securing a neat appearance. All piping shall generally be installed perpendicular or parallel to the major equipment, building structure, and floor levels.

3.2.2.3 All piping, including tubing, shall be installed in accordance with the following requirements:

A. Pipe shall not be installed above or within a horizontal distance of 3 ft. from electrical equipment such as switchgear, switchboards, control panels, motor controls, contactors, communication equipment, batteries, battery chargers, and generators.
B. Piping shall be installed with a minimum of 7 ft. 6 in. headroom over passageways and walkways.
C. Valves used for control shall be installed in such a manner that they can be operated from the main operating floors, platforms or remotely.
D. Pipe runs which require drainage shall be installed so that they pitch toward the point of drainage.
E. Piping shall be sloped continuously from high point to low point with a minimum slope of 1/400 unless otherwise directed by the P&IDs or drawings.

3.2.3 Thermal Expansion

3.2.3.1 All piping shall be installed as dimensioned on the design documents so that excessive or destructive expansion forces will not exist either in the cold condition or under conditions of maximum temperature.

3.2.4 Cutting and Drilling Structures

3.2.4.1 Drilling, cutting, and patching of structures required for proper installation of piping or bolts shall be performed only when shown on the drawings or only with permission of the BUYER.

3.2.4.2 All holes in grating and floor plate shall be banded and reinforced as required for strength and safety.

3.2.4.3 Penetrations through concrete shall be provided with sleeves and packing as specified per structural design documents.

3.2.4.4 Rainhoods, flexible weatherproofing and penetration seals shall be furnished and installed as shown on the drawings for piping passing through roof, wall and floor sleeves. VENDOR shall apprise the BUYER of any lack of such details.

3.2.5 Equipment and Jumper Connections

3.2.5.1 When attaching piping to equipment and removable jumper connections, special care shall be taken that excessive stresses are not transmitted to, and imposed upon, such connections.

3.2.5.2 The BUYER's Inspector shall be allowed to witness the installation of all such connections. At the BUYER's discretion, the BUYER may disallow any connection that may cause excessive loading. Piping connections to jumpers shall provide for repeatable successful fit-up demonstrations (i.e. jumpers are remotely installed and removed). See TFC-ENG-STD-22 for jumper requirements.

3.2.5.3 Heating to accommodate minor fit-up problems is not allowed.

3.2.6 Piping Tolerances

3.2.6.1 Refer to the Fabrication Tolerance and Alignment section of this specification for tolerance requirements.

3.2.6.2 All flex hoses shall be installed straight and without strain or as indicated on the drawings.

3.2.6.3 No cold springing, unless specifically allowed and within the limits provided on the drawings, will be allowed for piping fit-up. Improperly fitted piping shall be removed and replaced as directed by the BUYER at the VENDOR's expense.

3.2.7 Flange Joints

3.2.7.1 Gaskets and flange faces shall be protected from damage until installation is complete.

3.2.7.2 Special precautions must be taken when making up steel-to-cast iron flanged joints. The steel flange must be flat faced or have its raised face removed. Gaskets must be full-faced.

3.2.7.3 When temporary makeup at flanged joints is required in systems using special (e.g., GPT Linebacker®, spiral wound, etc.) gaskets, the joints may be made up with less expensive sheet gaskets and the special gaskets saved for the final installation.

3.2.7.4 Special care shall be taken during the installation of the GPT Linebacker® gaskets so that the gasket is not rendered ineffective by misalignment and/or overstressing.

3.2.7.5 Protective grease, paint, and other foreign material shall be cleaned from flange gasket faces prior to positioning the pipe spool for bolt up. Re-facing or repair of damaged flange facing shall not be permitted.

3.2.7.6 Bolt threads shall be coated with a Teflon lubricant. Special anti-galling compound is recommended for stainless steel fasteners. Flanges shall be made up by tightening diametrically opposite bolts in succession to load the gasket evenly or as directed by the manufacturer.

3.2.7.7 When a flanged joint has been made up and subsequently loosened, a new gasket shall be installed prior to retightening the joint.

3.2.8 Torque Requirements

3.2.8.1 Bolt Tension/Torque requirements for flange connections shall be in accordance with the gasket manufacturer's recommended torque requirements necessary to seat the gasket without overstressing the bolts.

3.2.8.2 Calibrate torque wrenches daily with a wrench calibrator.

3.2.8.3 Hydraulic Tensioners shall be used on flanges that make up piping identified as "Safety Significant" in the Piping Line List. Care shall be taken to seat the gasket without overstressing the bolts or over compressing the gasket.

3.2.9 Valves

3.2.9.1 General

A. All valves shall be installed in strict accordance with the manufacturer's recommendations.
B. The resilient seats or sleeve of valves are very susceptible to damage from heat during welding. The manufacturer's recommendations shall be followed when installing such valves in order to prevent seat or sleeve damage.
C. Valve internals that are removed during the welding process are to be controlled and stored correctly then be reinstalled and inspected per manufacturer instructions.

3.2.9.2 Butterfly Valves

A. The mating flanges for resilient seat butterfly valves shall be sufficiently separated so the valves do not have to wedged or forced into position. Butterfly valve discs shall be set in the open position prior to tightening the mating flange bolting.

B. After the bolts are tight, the operation of the valve shall be checked through a complete open and closed cycle to ensure that the disc or seat has not been jammed or damaged.

3.2.9.3 Check valves shall be tagged to indicate whether the internals have been removed, jacked open, or left unaltered. Internal parts that have been removed shall be bagged, tagged with the valve number and firmly attached to the appropriate valve.

3.2.10 Pipe Supports

3.2.10.1 Support components in contact with the pipe shall be of a material grade equal to the pipe and suitable for the operating temperature of the pipe.

3.2.10.2 Hangers/supports shall be the type and model numbers called out on the piping isometric drawing (if provided) and meet additional requirements and installation details stated on the standard support details.

3.2.10.3 For lines where there is no isometric drawing or the isometric drawing does not call out a support type the supports shall be Anvil International or equivalent and meet the general requirements set forth in the standard support details in MSS SP-58.

3.2.10.4 The application and spacing of pipe hangers and supports shall be in accordance with the applicable ASME B31.3 and MSS SP-58 when this information is not shown on the drawings.

3.2.10.5 Welding of pipe supports to structural steel framing shall be performed according to structural specifications, and the quality of welding shall be at least equivalent to that provided by the applicable AWS Welding Code. All welds shall run parallel to the axis of the beam span and all welding shall be staggered with cooling allowed between subsequent deposits.

3.2.10.6 All hangers shall be fabricated and installed in accordance with MSS-SP-58.

3.2.10.7 Supports which are located on AFC drawings shall not be relocated or reoriented without the BUYER's approval.

3.2.10.8 All weldments of supports to piping shall be made prior to PWHT.

3.2.10.9 Hangers shall be readjusted during start-up as required by the BUYER.

3.2.11 PMI

3.2.11.1 This section prescribes the requirements for PMI for pressure-containing components to:

A. Verify that the nominal composition of alloy components are of acceptable chemical composition independent of any certificate and marking that may exist.
B. Assure that correct alloy materials are used at the places where intended.

3.2.11.2 General

A. PMI shall be performed as close to the actual final installation as practical to ensure installation of the proper materials.
B. Components shall not be disassembled, and welds shall not be excavated to perform PMI.
C. PMI may not be possible at final installation due to the lack of accessibility of components or welds requiring PMI. Inaccessible items requiring PMI shall be tested at the appropriate time during the fabrication or assembly process.

3.2.11.3 Extent of PMI

A. The extent of PMI examination shall be applied to all alloy pressure-containing components that make up fabricated piping identified as "Safety Significant" in the Piping Line List, 31269-16-LST-0001. All pressure-containing parts shall be 100% verified, with the exception of bolting. PMI examination of bolting samples shall be completed for each heat/lot used for spool fabrication and shall meet the "Normal Sampling Plan" per Report TR-017218-R1 Table 2-1.
B. Shop fabricated spools that have undergone PMI per CSI Section 40 05 05.11 do not require additional PMI testing in the field.
C. This shall consist of a minimum of one test point for each pressure piping component of piping. This includes each:
   - Plate, pipe length, pipe fitting (elbows, olets, tees, reducers, etc.), flange, blind, special component, pipe nipple, solid metal gasket, bolting, etc.
   - Body, bonnet/cover and body/bonnet bolting and nuts of process valves (including control valves) and relief valves.
   - Pressure containing weld. Welds exceeding 48 in. in length shall include one additional test point for every 48 in. weld length.
   - The extent of PMI shall be limited to alloy materials.

3.2.11.4 PMI Test Methods

A. PMI, where required, shall be performed by one of the following methods:
   - Portable X-Ray Fluorescence (XRF) spectrometers with direct reading of alloy grade or percentage of each element present
   - Optical Emission Spectrometry

B. Testing of any material grades not suitable for testing by the above methods shall be tested as agreed upon by the BUYER.
C. Other methods such as chemical spot testing, thermoelectric, mechanical methods etc. are not acceptable.

3.2.11.5 PMI Procedures

A. The VENDOR performing PMI shall submit a PMI testing procedure for approval by the BUYER. This specification shall be met as a minimum.

B. The VENDOR performing the PMI testing shall comply with the manufacturer's recommendations when calibrating and/or verifying the test equipment performance. Calibration shall occur daily at the start of work if possible.
C. The BUYER's Inspector shall be allowed to witness any or all PMI testing.

3.2.11.6 Personnel and Qualifications

A. Personnel performing PMI testing shall be certified in the operation of the equipment and the test method used by completing a training course approved by the manufacturer of the PMI test equipment. Personnel qualifications shall include certification and be submitted for review and approval by the BUYER.
B. Personnel using PMI equipment shall calibrate and maintain equipment in accordance with the manufacturer's specification.

3.2.11.7 Acceptance Criteria

A. All materials shall meet the chemical composition percentages specified in the relevant ASME BPVC Section II Part D or ASTM material specifications as defined by the drawings. Alternatively, a match against the relevant reference spectra stored in the instrument, i.e. 316 stainless steel or 16Cr – 12Ni – 2Mo, is acceptable.
B. The testing results shall fall within the chemical range while allowing for the accuracy of the machine.
C. If testing leads to the potential rejection of a component then the component shall be rejected and replaced or analyzed with a more accurate method for acceptance.
D. Component replacements shall undergo PMI and conform to the acceptance requirements.
E. The BUYER shall be notified of all rejected items and the reason for rejection.
F. If a component is rejected, all items within the lot should be considered suspect. A more extensive inspection shall be performed on the lot.
G. All rejected material, items and welds shall be marked and segregated.
H. CMTR's or CoC's should not be considered a substitute to PMI testing.

3.2.11.8 Materials Identification

A. Alloy materials are to be identified by their alloy designation (i.e. ASTM description) or nominal composition.
B. PMI test locations shall be marked, preferably with low-stress stamp or semi-permanent paint applied to each item. The marker shall not contain additives such as aluminum, chlorides, sulfur, lead or zinc which may be detrimental to the material.

3.2.11.9 Documentation

A. The VENDOR shall record results and provide documentation on a PMI Report containing the following as a minimum:

- VENDOR name (fabricator)

- Specific job reference (PO#)
- PMI procedure(s) and revision used
- Testing date and location
- Testing personnel and company performing the tests
- Test equipment identification number or serial number
- Date of calibration of the alloy analyzer
- Recorded results of the tests for each item
- Material specification and grade
- Traceability (heat number and welding joint number)
- Number of items examined
- Documentation as described in API RP 578 Section 7.5.f and g.
- Signature and date of the VENDOR's representative assuring compliance to the requirements of this specification
- Signature and date by the BUYER's inspector verifying the review and acceptance of results

3.2.12 Pressure Testing

3.2.12.1 General

A. All piping shall be pressure tested in accordance with the requirements of the ASME B31.3 Code and this specification. All tests shall be documented by the VENDOR (refer to Appendix D).
B. VENDOR shall repair or replace and retest any piping assembly that does not perform satisfactorily during BUYER's hydrostatic or pneumatic pressure tests as a result of defective workmanship by the VENDOR, or as a result of faulty materials supplied by the VENDOR.

3.2.12.2 Pretest Inspection

A. All lines shall be thoroughly flushed prior to pressure testing, and prior to any automated valves being installed or pressure tested to prevent/minimize weld slag or other foreign material from damaging the valve trim. Other in-line instruments should also be removed or valved off prior to flushing.
B. The VENDOR shall place the system on hold for witness and notify the BUYER in advance of when a piping system is ready for a pretest inspection.
C. The pretest inspection shall verify that all components in a piping system conform to the appropriate pipe material specification (e.g., material, wall thickness, valve numbers, valve ratings, flange ratings, etc.) and the latest revision of the appropriate P&IDs, and is ready for pressurization.
D. The BUYER's Inspector will inspect each piping system using a copy of Appendix B and subsequently notify the VENDOR of any problems that need to be corrected prior to pressure testing.
E. All joints shall be inspected by the BUYER's Inspector to ensure they have been assembled in accordance with the applicable Code and this specification. All joints shall be left uninsulated until testing has been completed if insulation is required.

F. All supports, shoes, guides and anchors shall be inspected by the BUYER's Inspector for proper type, installation and location. Spring supports shall also be inspected for correct cold setting, with the hot and cold settings permanently marked, and for freedom of spring movement. All springs shall be blocked in the cold location for pressure testing.
G. Pressure vessels, heat exchangers, prefabricated skid-mounted process units, pumps, compressors and the miscellaneous items listed on Appendix B shall be isolated from piping systems that will be pressure tested unless approved for testing within the system by the BUYER. All control valves shall be installed and included in the pressure test with valves in the open position.
H. If a block valve is used for isolating test sections, the differential pressure across the valve seat shall not exceed the rated seat pressure.
I. All plugs and caps shall be inspected by the BUYER's Inspector to ensure that they comply with the appropriate pipe material specification.
J. All check valves shall be inspected by the BUYER's Inspector to ensure they have been tagged for the purpose of identifying the status of flappers, balls or pistons. The tag shall indicate whether the internals have been removed, jacked open, or left unaltered.

3.2.12.3 Testing

A. Pressure testing personnel shall be qualified in accordance with the Field Quality Control section of this document.
B. The Piping Line List specifies which piping systems are to be pressure tested, the test pressure, and the test media. All pressure testing shall be done hydrostatically unless otherwise specified.
C. The BUYER shall be notified in advance of field testing, and the VENDOR shall place field testing on hold for witness. All field tests shall be documented with a test report and witnessed by the BUYER.
D. An initial service leak test is not permitted.
E. Vent and drain piping which is downstream of the last block valve and open to the atmosphere does not require pressure testing.
F. If there are in-line items (valves, sensors, relief valves, etc.) that are not designed for the test pressure replace items with a spool and test the whole pipeline. Decision shall be approved by the BUYER prior to testing.
G. Plastic pipe shall not be pressure tested with a compressible fluid (e.g., air, gas, etc.). Joints in plastic piping shall be set, cured, or hardened in accordance with the manufacturer's recommendation prior to testing. The temperature of plastic piping shall not be more than 23°C (73°F) during pressure testing.
H. The quality of a test fluid shall not be detrimental to the equipment or the pipe system materials. Approval by the BUYER shall be obtained before using any test fluid.
I. Water for testing equipment and piping containing austenitic stainless steel materials shall contain no more than 50-ppm chloride ion.

J. Pneumatic testing shall be done with compressed air or nitrogen when pneumatic testing is approved by the BUYER. Unless otherwise approved by the BUYER, pneumatic testing shall not be performed when any of the following conditions exist:
   - When the temperature of the piping system is less than 21°C (70°F).
   - The test pressure exceeds 110 psig.
   - The product of pressure (psig) times volume (cubic feet) exceeds 50,000.

K. Pressure gages and recorders shall be calibrated before tests. Pressure gages shall have a dial scale ≥ 4 ½ in. diameter, a range such that the test pressure is within 40% to 80% of the full scale and be calibrated within 2% at the full scale reading.

L. Unless otherwise approved by the BUYER, pressure testing shall not be performed when the temperature of test fluid is less than 4°C (40°F).

M. Filter elements and strainers that may have been installed shall be removed from the system prior to pressure testing.

N. Equipment appurtenances such as level bridles, etc., shall be tested separately when the equipment is excluded from pressure testing.

O. All control valves shall be included in the pressure test with valves in the open position.

P. The VENDOR shall verify that the status of all pressure relieving devices is as specified per Appendix C, and that all components included in the test can withstand the test pressure.

Q. Each pipe system shall be observed to ensure that all supports, including spring supports, are not overloaded due to weight of the test medium. All spring supports shall have factory-installed travel stops installed during pressure testing.

R. If insulation is required, the VENDOR shall immediately remove or dry out any insulation that becomes wet during pressure testing. Reinstallation of previously wet insulation is subject to BUYER approval.

S. Piping that is free of leakage for the duration of the specified tests shall be accepted.

T. Test diagrams or isometric drawings shall identify the test parameters. The drawing shall show actual configuration of piping, valves, etc. of the test.

3.2.13 Pressure Testing of Fully Welded Systems

3.2.13.1 Where there's an inability to isolate a fully welded system for leak testing, temporary flanges may be welded and blind flanges installed or temporary weld caps may be welded to isolate the system. The system shall be hydrostatically tested. Upon successful testing in accordance with ASME B31.3, Para. 345, the temporary flanges or caps shall be cut off, and the ends shall be prepared, welded and piping system installed in accordance to this specification.

3.2.13.2 Other methods (e.g. Test plugs or joints) to isolate the system are allowed, but the selected method shall fulfill all requirements of ASME B31.3 and be the most economical without damaging the pipe.

3.2.14 The final weld connecting piping systems or components (closure weld) which have been successfully tested in accordance with ASME B31.3 para. 345 need not be leak tested provided the weld is examined in-process in accordance with ASME B31.3 para. 344.7 and passes with 100% radiographic examination in accordance with ASME B31.3 para. 344.5 or 100% ultrasonic examination in accordance with ASME B31.3 para. 344.6. For "Safety Significant" closure welds, the in-process examination will include liquid penetrant or magnetic particle examination of the root pass [see ASME para. 344.7.1(e)]. Records of individual examinations are required.

3.2.15 Repair of Leaks and Defects

3.2.15.1 The VENDOR shall be responsible for repairing all leaks and the additional examination or tests required as a result of those leaks. Leaks shall be repaired as directed by the BUYER.

3.2.15.2 Defective joints shall be either removed or reworked as required by the BUYER.

3.2.15.3 Reworks shall be made in accordance with procedures approved by the BUYER.

3.2.15.4 Examination and/or inspection of a completed joint rework shall be as required for the original joint or by a BUYER approved alternate method which will ensure equal or greater soundness.

3.2.16 Restoration

3.2.16.1 After successful completion of pressure testing, all lines shall be flushed and completely drained.

3.2.16.2 Oil, gas, air and chemical piping which has been either flushed or hydrostatically tested shall be thoroughly purged with air or nitrogen and dried to the satisfaction of the BUYER.

3.2.16.3 All valves that were closed during pressure testing shall be opened to ensure proper drainage of the bonnet cavity. All valves shall be partially opened and closed during the flushing operation to flush foreign material out of the system.

3.2.16.4 Care shall be exercised in draining vessels and piping so as not to create a vacuum. All vents within a system shall be opened prior to draining. After piping systems and vessels are completely drained, all vents and drains, and all other internals which were opened prior to testing shall be closed.

3.2.16.5 All temporary blanks and blinds shall be removed, and all valves, orifice plates, expansion joints, instrumentation and short pieces of piping which have been removed shall be reinstalled with proper gaskets in place.

3.2.16.6 The VENDOR shall restore, if required, all valves after successful pressure testing. Restoration of valves shall include the removal of any jacks; reinstallation of flappers, balls and pistons; and the replacing of bonnet gaskets on valves that were disassembled. The VENDOR shall notify the BUYER prior to valve restoration so the BUYER may witness the restoration. The BUYER will sign the tag that was previously placed on the valve and indicate that valve is ready for operation.

3.2.16.7 After lines have been drained, temporary piping supports shall be removed. All restraining parts that were supplied with hangers and expansion joints for their protection when carrying the test loads shall be removed upon completion of the system test.

3.2.16.8 Flanged joints at which test blinds have been removed shall not be tested. Special length bolting and temporary gaskets shall be removed and replaced with line class bolts and gaskets.

3.2.16.9 Each system shall be connected to equipment where applicable and be ready for inspection. The terminal points of piping systems which are left for future connections shall be sealed with blinds or plugs.

3.2.17 Post-Test Inspection

3.2.17.1 The VENDOR shall place the system on hold for witness and notify the BUYER in advance of when a piping system is ready for post-test inspection.

3.2.17.2 The BUYER will inspect each piping system using Appendix D and subsequently notify the VENDOR of any problems that need to be corrected prior to operation.

3.2.17.3 The post-test inspection shall verify that a piping system has been flushed, dried, restored, and connected to the satisfaction of the BUYER, and is ready for operation.

3.2.17.4 Pressure relief valves, spring hangers and expansion joints shall be inspected by the BUYER's Inspector to see that all shipping spacers and shipping ties have been applied.

3.3 Field Quality Control

3.3.1 General

3.3.1.1 All work associated with this specification shall be performed in accordance with the quality assurance requirements specified in the contract documents and CSI Section 01 40 00.

3.3.1.2 The VENDOR shall be responsible for performing all examinations, inspections, tests, and repairs of welds in accordance with ASME B31.3, CSI Section 40 05 05.33 and this specification.

3.3.1.3 ASME examination personnel shall include certification per ASME BPVC Section V, Article 1, T-120(e) and the requirements of B31.3, Para. 342.

3.3.1.4 All weld examinations shall be performed in accordance with CSI Section 40 05 05.33.

3.3.1.5 Each field bend shall require 100% ultrasonic examination with reports provided to the BUYER for approval.

3.3.1.6 Wall thickness measurement procedures and reports shall be provided for piping identified as "Safety Significant" in the Piping Line List. Wall thickness measurements apply to pipe bends, piping, bulk piping, butt-weld flanges and butt-weld fittings.

3.3.1.7 Wall thickness measurement samples shall be completed for each Safety Significant heat/lot used for fabrication and as a minimum shall meet the "Normal Sampling Plan" per Report TR-017218-R1 Table 2-1. A sampled item is considered defective if the measured wall thickness does not meet the established acceptance criteria. The lot acceptance basis is as follows:

A. The lot shall be accepted if the sample metal wall thickness is within the permitted thickness tolerances in the applicable ASTM standard.
B. For ASME B16.9 tees the lot shall be accepted if:
   - The sample metal wall thickness is a minimum of 1.00 times the nominal thickness specified in ASME B36.10M or B36.19M for straight pipe of the specified schedule.
   - The Tee side wall and crotch wall thickness is a minimum of 1.15 times the nominal thickness specified in ASME B36.10M or B36.19M for straight pipe of the specified schedule.

C. Shop fabricated spools that have undergone wall thickness measurement procedures do not require additional testing in the field.

3.3.1.8 Nonconforming lots shall require metal wall thickness measurements of each component in the lot with the established acceptance criteria above applied.

3.3.1.9 Wall thickness reports are to be submitted for the required components for each heat/lot used for fabrication. The report shall contain each heat/lot along with sample results. The term "butt-weld fitting" includes elbows, tees, reducers, caps, laterals, crosses, butt-weld reinforced fittings and swages; however, it excludes socketweld nipples, fittings and flanges. Additionally, the side wall and crotch thickness of ASME B16.9 tees shall be included in the submitted reports.

3.3.1.10 Reports are to be submitted for verification of gasket and seal (including O-rings) functionality for "Safety Significant" lines per the Piping Line List according to the following acceptance criteria:

A. Part description shall be confirmed per the call out of the applicable pipe material class.
B. Material composition per the applicable pipe material class shall be established via chemical analysis. Where the analysis can only be established by destructive testing, a randomly selected set may be used from the same heat/lot.
C. Durometer hardness shall be +/- 5 of the specified value on the Shore A scale. For gaskets whose cross section is too small to perform a Shore A test, an alternative test shall be recommended and conducted by the VENDOR. Where the durometer can only be established by destructive testing, a randomly selected set may be used from the same heat/lot and as a minimum shall meet the "Normal Sampling Plan" per Report TR-017218-R1 Table 2-1.

D. Surfaces shall be free from protruding foreign material and be free of surface defects as determined by visual examination.
E. Dimensional tolerances shall be compliant as specified in manufacturer's data and as identified by the specified dimensional standard.
F. Shop fabricated spools that have undergone verification of gasket and seal (including O-rings) per CSI Section 40 05 05.11 do not require additional testing in the field.

3.3.1.11 The VENDOR shall be responsible for ensuring that all requirements set forth in CSI Section 40 05 00, CSI Section 40 05 00.11, CSI Section 40 05 51, and this specification have been satisfied.

3.3.1.12 Nonconforming material shall be physically segregated from acceptable items when possible and shall be in strict accordance to the Quality Assurance section of this document.

3.3.1.13 Nameplates shall be fully visible when the equipment is in an operating condition.

3.3.2 Before the completion of fabrication, the BUYER's inspector shall:

A. Performs a walk-down to verify that the work is in accordance with the Piping and Instrumentation Diagrams (P&IDs), drawings and this specification.
B. Verifies marking and identification is in accordance with marking and identification requirements.
C. Visually examines items that are accessible without disassembly for general workmanship, cleanliness and quality.
D. Verifies PMI and documentation is in accordance with this specification.

3.4 Adjusting and Cleaning

NOT USED

3.5 Demonstration

NOT USED

3.6 Protection

NOT USED

4.0 LIST OF APPENDICES

4.1 Appendix A – Supporting Document(s) Issued With This Specification

4.2 Appendix B – Piping Pre-Pressure Test Checklist

4.3 Appendix C –Status of Instruments During Pressure Test

4.4 Appendix D – Piping Pressure Test Checklist

4.5 Appendix E – Requirements for Underground Piping

Appendix A – Supporting Document(s) Issued With This Specification

Lists:	31269-16-LST-0001, Piping Line List
Drawings:	Piping Orthographic Drawings and Piping Isometric Drawings as indicated in purchase order

Appendix B – Piping Pre-Pressure Test Checklist

INSPECTION DATE _____

INSPECTED BY _____

PLANT _____ VENDOR _____

SYSTEM/LINE NO. _____ DWG REF. _____

		BUYER				VENDOR		
		(Initials)		Date		(Initials)		Date
1.	All material/equipment (valve numbers, nipple schedules, flange ratings, etc.) complies with specifications and Piping and Instrumentation Diagrams							
2.	All threaded connections, flange bolting, gaskets, and socket welds correctly installed.							
3.	All PWHT completed and acceptable							
4.	All NDE (hardness, MT, PT, RT, UT) acceptable							
5.	Instrumentation protected/secure							
6.	Rotating equipment internals protected/secure.							
7.	Expansion joints, relief valves, orifice plates, meters, control valves, filter elements, internal refractories, and other special items protected/ secure.							
8.	Vents installed at system high points.							
9.	Gauges calibrated and installed.							
10.	Status of check valve internals has been tagged.							
11.	Blinds correctly installed.							
12.	Temporary plugs and caps have been replaced.							
13.	Low point drains are installed as needed.							
14.	All welded attachments have been installed and accepted							
15.	Instrument status in compliance with Appendix C							

REMARKS

_____

_____

_____

Appendix C – Status of Instruments During Pressure Test

	Block & Vent	Remove	Blind Off	Include in Test	Refer to Notes
Analyzers		X			
Control Valves				X	
Flame Arrestors		X			2
Flow Indicating Switches-Bellows Types		X			
Flow Instruments-D/P Cell & Bellows Type	X				
Flow Instruments-Rotameters		X			2
Flow Meters-Positive Displacement Type			X		2
Flow Meters-Turbine Type		X			2
Flow Switches-Vane Type		X			
Gage Glasses	X				
Level Instruments-Displacer Type		X			
Level Instrument-D/P Cell & Bellows Type	X				
Level Switches-Float Type		X			
Orifice Plates		X			4
Pressure Gages	X				
Pressure Instruments-All Types	X				
Pressure Regulators		X			
Pressure Switches	X				
PSV's		X			2
PSV's-3/4" and 1" Screwed		X			2
Rupture Discs		X			
Steam Traps		X			2
Thermowells				X	

NOTES:

1. All instruments shall be protected from damage due to freezing. In preparation for cold weather and during cold weather all instruments must be drained and process lead lines blown out with air or nitrogen.
2. Fabricate and install temporary spool if necessary for test.
3. Caution - do not overpressure instrument. Check with Instrument Engineer for maximum test pressure allowed by manufacturer.
4. Install after pressure testing and line flushing.

Appendix D – Piping Pressure Test Checklist

INSPECTION DATE _____

INSPECTED BY _____

PLANT _____ VENDOR _____

SYSTEM/LINE NO. _____ DWG REF. _____

TEST MEDIUM (INCLUDING PPM CHLORIDE) _____

TEST PRESSURE, PSIG _____ TEST TEMP, °F _____

TEST GAGE _____ TEST GAGE PRESSURE, PSIG _____

CALIBRATION DUE DATE _____ AMB TEMP / TIME OF DAY / TEST DURATION _____

		BUYER		VENDOR	
		(Initials)	Date	(Initials)	Date
1.	Pressure Test Complete and acceptable				
2.	Test boundary sketch with ID of any joints not tested attached.				
3.	If partial tests were made, define:				
	a. _____				
	b. _____				
	c. _____				
	d. _____				
4.	System ready for post-test check.				
	a. Test blinds removed.				
	b. Final line flush complete.				
	c. Vents properly plugged.				
	d. Drains properly valved and plugged.				
	e. Instruments properly installed.				
	f. Expansion joints, relief valves, control valves, in-line meters, filter elements orifice plates, in-line strainers, and other special items properly installed.				
	g. Rotating equipment properly in-line.				
	h. Temporary supports removed.				

REMARKS

_____

_____

Appendix E – Requirements for Underground Piping

1.0 PART 1 – GENERAL

1.1.1. This Appendix covers the minimum requirements for the furnishing, receiving, handling, storing, constructing, inspecting, and testing of all metallic and non-metallic buried piping shown on the drawings. The intent of this Appendix is to supplement the requirements covered in the body of the specification.

1.1.2. This specification excludes any special requirements for the fabrication of double containment piping. See CSI Section 40 05 23.23 for double containment piping requirements.

1.1.3. This appendix shall be used in conjunction with ASME B31.3, manufacturer's recommendations, and other referenced codes and standards.

2.0 PART 2 – PRODUCT

2.1 Fabrication

2.1.1. Threaded joints are prohibited underground.

2.1.2. Flanged Joints

2.1.2.1. Flanged joints shall not be used unless shown on the drawing or written BUYER approval is granted.

2.1.2.2. If approved, buried flange joints shall be carefully wrapped with Denso Tape PPS before backfilling.

2.1.3. A mechanical harness joint restraint system shall be installed according to the manufacturers recommendations at locations indicated on the construction drawings.

2.1.4. Plastic piping systems (e.g., PVC, etc.) that must be bonded with either solvent cement or adhesive shall be made by qualified bonders using qualified bonding procedures. Bonders and bonding procedures shall be qualified in accordance with the requirements of ASME B31.3.

2.1.5. Tracer wire to be twelve (12) gauge minimum solid copper wire with thermoplastic insulation recommended for direct burial and tracer wire applications. Wire connectors shall be watertight to provide electrical continuity. Connectors shall be installed according to the manufacturer's recommendations.

3.0 PART 3 - EXECUTION

3.1 Testing

3.1.1. Pressure Testing

3.1.1.1. Pipe joints shall be accessible for inspection during pressure testing. Pressure testing shall be performed at earliest opportunity to avoid trench washout.

3.1.1.2. All field welds in the buried portion of large diameter (30 in. NPS and above) water systems that cannot be pressure tested prior to backfilling, shall be radiographically examined in accordance with ASME BPVC Section V Article 2. A minimum of 1 in. film per weld shall be used unless otherwise directed by the BUYER. If defects are revealed by radiography they shall be repaired at the expense of the VENDOR and to the satisfaction of the BUYER.

3.1.1.3. Ductile iron, cast iron or plastic pipe shall not be pressure tested with a compressible fluid (e.g., air, gas, etc.). Joints in plastic piping shall be set, cured, or hardened in accordance with the manufacturer's recommendations prior to testing. The temperature of plastic piping during pressure testing shall be per the applicable ASTM and manufactures standard recommendations.

3.1.1.4. To prevent movement during testing, sufficient backfill shall be placed over plastic pipe and pipe utilizing bell and spigot type joints. Pressure testing shall be performed with the pipe joints left accessible for inspection. Testing shall be performed as soon as possible in order to avoid trench washouts.

3.1.1.5. When water or other liquids must be drained from a piping system due to either flushing, pressure testing, or for leak repair, the drainage operation shall be as directed by the BUYER but in no case shall the liquids be drained into the trench.

3.1.2. VENDOR shall perform a continuity test on all tracer wire in presence of BUYER Engineer's representative. If the tracer wire is found to be not continuous after testing, contractor shall repair or replace the failed segment of wire at the VENDOR's expense.

3.2 Tagging and Marking

3.2.1. Buried lines shall be marked with a colored inert plastic tape buried a distance above the line in accordance with CSI Section 31 23 00 "Excavating, Backfilling and Compacting for Underground Utilities".

3.3 Cleaning and Coating

3.3.1. Each system shall be either flushed with water or blown clean with air prior to testing as directed by the BUYER. Valves and hydrants shall be partially opened and closed during flushing operations to flush foreign material from crevices.

3.3.2. All other buried metallic piping systems with the exception of double containment piping and asphaltic coated piping systems shall be coated. Coating materials shall conform to CSI Section 40 46 00 and be suitable for the normal operating temperature specified on the Piping Line List.

3.3.3. Joints shall neither be encased nor coated until after a successful completion of all testing.

3.4 Trenching and Bedding

3.4.1. All trenching and bed preparation shall be performed in accordance with the requirements of this specification and CSI Section 31 23 00.

3.4.2. Excess soil from trenching shall be disposed of on-site as directed by the BUYER.

3.4.3. The VENDOR shall maintain the trench in good condition to prevent caving in either before or after pipe is installed.

3.4.4. Plastic pipe shall be bedded and backfilled in accordance with both the manufacturer's recommendations and the additional procedures of ASTM D2774.

3.4.5. Trench widths shall be sufficient to allow adequate compaction around the pipe.

3.4.6. The trench width for plastic pipe shall also allow the snaking of pipe from side-to-side along the bottom of the trench if the pipe is installed in hot weather.

3.4.7. The bottom of the trench shall be shaped to give substantially uniform circumferential support to the bottom quadrant of each length of pipe. Bell holes shall be provided for all pipe hubs and bells, so that the pipe barrels are fully supported by the trench bottom. The remainder of the trench bottom shall be continuous, relatively smooth, and free of rock. When rocks, boulders, or large stones are encountered which may cause point loading on the pipe, they shall be removed. The bedding material shall conform to CSI Section 31 23 00.

3.5 Installation

3.5.1. All excavating, trenching, bedding, pipe laying, filling, backfilling and compacting shall be done in accordance with CSI Section 31 23 00.

3.5.2. Pipe and fittings shall be carefully lowered into the trench. Pipe shall not be laid in water or when trench conditions are unsuitable for the work. Each pipe shall be laid true to line and grade.

3.5.3. At times when work is not in progress, open ends of pipe and fittings shall be securely closed so that no trench water, earth or other foreign material enters the pipe. Pipe ends left for future connections shall be blind flanged, capped or closed in accordance with the drawings.

3.5.4. Open trenches shall be adequately barricaded in accordance applicable OSHA standards, local codes having jurisdiction, the requirements of this specification and any BUYER guidelines that may exist.

3.5.5. Pipes passing under or through walls shall be protected from breakage.

3.5.6. Any pipe passing under a footing or through a foundation wall shall be provided with a steel or cast iron pipe wall sleeve two (2) pipe sizes greater than the pipe passing through unless otherwise specified on the construction drawings.

3.5.7. Hydrants and all above grade operators and indicators for below grade valves shall be protected by four stout bollards.

3.5.8. All lines carrying water shall be buried a minimum of 12 inches deeper than the maximum frost depth.

3.5.9. Risers shall be heat traced or otherwise protected from freezing.

3.5.10. Plastic Pipe

3.5.10.1. All PVC piping shall be installed in accordance with the manufacturer's recommendations.

3.5.10.2. Precautions shall be taken to ensure that bending and lowering of pipe into the trench does not result in kinking or buckling.

3.5.10.3. All other plastic piping shall be installed in accordance with the manufacturer's recommendations.

3.5.10.4. When lifting with slings, only wide fabric choker slings shall be used to lift, move, or lower plastic pipe and fittings

3.5.10.5. Wire rope or chain shall not be used.

3.5.10.6. Slings shall be of sufficient capacity for the load, and shall be inspected before use.

3.5.10.7. Worn or defective equipment shall not be used.

3.5.11. Valves

3.5.11.1. All underground valves shall be furnished with above grade operators.

3.5.11.2. All valves shall be installed in accordance with the manufacturer's recommendations. Particular attention should be given to the manufacturer's recommendations for weld end type valves utilizing resilient seats.

3.5.12. Insulating Buried Piping

3.5.12.1. Underground piping shall be insulated when indicated on the piping line list.

3.5.12.2. When aboveground heat traced piping continues underground, a portion of the buried piping system shall also be heat traced and insulated. The heat tracing and insulation shall extend past the frost depth.

3.5.12.3. Insulation for buried piping shall be cellular glass covered with a plastic waterproof jacketing approved by the BUYER.

3.5.12.4. The insulation shall be applied in strict accordance with insulation manufacturer's instructions.

3.5.13. All cathodic protection shall be performed by the VENDOR in accordance with project requirements.

3.5.14. Tracer Wire

3.5.14.1. Two (2) tracer wires shall be installed on all non-metallic buried piping to accurately locate the underground piping.

3.5.14.2. Tracer wire shall be laid flat and securely affixed to the pipe at 10 foot intervals.

3.5.14.3. Tracer wire shall be secured to the pipe as required to ensure that the wire remains adjacent to the pipe.

3.5.14.4. Tracer wire shall be securely bonded together at all wire joints with a BUYER approved watertight connector to provide electrical continuity, and it shall be accessible at all trace wire access points.

3.5.14.5. Tracer wire shall be continuous along main without splices from all tracer wire access points.

3.5.14.6. At each valve location (including fire hydrant isolation valves), a loop of wire is to be brought up the outside of the valve box and looped inside the box through a filed drilled hole 2 inches below the bottom of the lid.

3.5.14.7. At the point of connection between cast or ductile iron mains, the tracer wire call be properly connected to the iron pipe with a cad weld or BUYER approved equivalent.

3.5.14.8. Tracer wire weld shall be completely sealed with the use of an approved mastic type sealer specifically manufactured for underground use. Mastic shall be applied in a thick coat a minimum of 1/4 in. thick and shall be protected from contamination by the backfill material with the use of a plastic membrane.

3.5.14.9. At all main end caps, a minimum of 6 feet of tracer wire shall be extended beyond the end of the pipe, coiled and secured to the cap for future connects.

3.5.14.10. The end of the tracer wire shall be spliced to the wire of six pound zinc anode and is to be buried at the same elevations as the water main.

3.6 Restoration

3.6.1. After successful completion of hydrostatic pressure testing, all lines shall be completely drained. Water used for flushing and pressure testing shall be directly disposed of via the site drainage system or as otherwise directed by the BUYER.

3.6.2. Oil, gas, and air piping which has been flushed or hydrostatically tested shall be thoroughly purged with air or nitrogen and dried to the satisfaction of the BUYER before placing in service.

3.6.3. Each system shall be connected to equipment where applicable and be ready for operation.

3.7 Backfilling and Compaction

3.7.1. All backfilling and compaction shall be performed in accordance with CSI Section 31 23 00 and the additional requirements of this Section, and only after written approval of the BUYER.

3.7.2. Backfilling and tamping for all systems shall not be performed until after a successful field pressure test (or radiographic examination) and the completion of any necessary coating and lining.

SPECIFICATION

16-2-005

PIPE WELDING

AECOM ATKINS AREVA

LOW ACTIVITY WASTE PRETREATMENT SYSTEM

Project No. 31269 (T5L01)

Document No. 16-2-005

CSI Section 40 05 05.33

Safety Related ☒ Non-Safety Related ☐

PIPE WELDING

Prepared for

Washington River Protection Solutions, LLC

Revision: 0 Status: Final

MATTHEW SEAN JEND
STATE OF WASHINGTON
54709
REGISTERED
PROFESSIONAL ENGINEER

5/17/17

FOR PERMITTING
MSJ 5/17/17

REVISION PAGE

Project Name:	LAWPS	**Discipline:**	Piping
Client:	Washington River Protection Solutions	**Project Number:**	31269 (T5L01)
		Latest Revision:	0

REVISION SIGNATURES

J. Jackson		5/16/17	M. Jend		5/17/17
Prepared by		Date	Approved by (SDE/Lead)		Date
G. Jones		5/16/17	P. Bell		5/17/17
Checked by		Date	Approved by (QA)	For D.P.	Date
M. Quintana		05/17/17	D. Priebe		5/17/17
Verified by (If required)		Date	Approved by (PEM)		Date

Status	Rev. No.	Date	Prepared By	Pages	Description of Changes
Final	0	5/17/17	J. Jackson	21	Approved for Construction

Safety Related Yes ☒ No ☐	**Quality Level** Full QA ☒ Enhanced QA ☐ Commercial QA ☐

TABLE OF CONTENTS

1.0 PART 1 - GENERAL 1

1.1 Section Scope 1
1.2 Related Sections 1
1.3 Codes and Standards 1
1.4 System Description 2
1.5 Submittals 2
1.6 Delivery, Storage & Handling 3
1.7 Quality Assurance 3
1.8 Site Conditions 4

2.0 PART 2 - PRODUCTS 5

2.1 Manufacturers 5
2.2 Materials 5
2.3 Equipment 5
2.4 Components 5
2.5 Fabrication 5
2.6 Shop Quality Control 6

3.0 PART 3 - EXECUTION 9

3.1 Preparation 9
3.2 Erection, Installation & Application 9
3.3 Field Quality Control 11
3.4 Adjusting and Cleaning 12
3.5 Demonstration 12
3.6 Protection 12

4.0 LIST OF APPENDICES 13

4.1 Appendix A – Supporting Document(s) Issued With This Specification 13
4.2 Appendix B – Weld Procedure Log for Piping 13

LIST OF TERMS

Abbreviations and Acronyms

Term	Definition
ASME	American Society of Mechanical Engineers
ASTM	ASTM International
ASNT	American Society of Nondestructive Testing
AWS	American Welding Society
BPVC	Boiler & Pressure Vessel Code
CoC	Certificate of Conformance
CQA	Commercial Quality Assurance
CWEng	Certified Welding Engineer
CWI	Certified Welding Inspector
EQA	Enhanced Quality Assurance
FCAW	Flux Core Arc Welding
FQA	Full Quality Assurance
GMAW	Gas Metal Arc Welding
GTAW	Gas Tungsten Arc Welding
LAWPS	Low Activity Waste Pretreatment System
NDE	Nondestructive Examination
O_2	Oxygen
PPM	Parts Per Million
PQR	Procedure Qualification Record
PWHT	Post Weld Heat Treatment
RFI	Request for Information
RT	Radiographic Testing
SAW	Submerged Arc Welding
SMAW	Shielded Metal Arc Welding
UT	Ultrasonic Testing
WPS	Welding Procedure Specification
WQTR	Welder Qualification Test Record

Units

°C	Degree Celsius
°F	Degree Fahrenheit
in	Inch
ppm	Parts Per Million

Definitions

BUYER – The company for whom the VENDOR is performing work or services.

COMMERCIAL QUALITY ASSURANCE (CQA) - Level of controls for those items, services, or processes where, based on an evaluation of risk or nuclear safety, no additional quality controls beyond the provider's published or stated attributes of the item, service, or process is required.

DESIGN CHANGE – Within the context of this specification, a DESIGN CHANGE is technically equivalent to a SUBSTITUTION (see SUBSTITUTION). However, the term DESIGN CHANGE may be used to refer to more significant changes to the design compared to a simple substitution.

DEVIATION – Any departure from the requirements contained in the purchase order and specification which VENDOR proposes to incorporate if approved by BUYER.

ENHANCED QUALITY ASSURANCE (EQA) - Level of controls for those items, services, or processes where, based on an evaluation of risk or nuclear safety, additional controls beyond the provider's published or stated attributes of the item, service, or process are needed to verify critical attributes.

FULL QUALITY ASSURANCE (FQA) – Level of controls applied for items services, or processes that are commensurate with the controls invoked under ASME NQA-1 or other appropriate national consensus standard.

HANDLING – The movement or transportation of items following receipt from offsite/ project locations. This includes movement within storage areas and movement/transportation from receipt or storage areas to field locations. Handling requirements include the need for special handling tools and equipment, restrictions on material composition of surfaces in contact with the item, protection against damage or deterioration, which could occur during movement and placement, protection against physical damage due to excessive shock or vibration, and protection against entry of dirt, water, or other contaminants.

HOLD POINT – A mandatory inspection activity beyond which work shall not proceed until (1) the inspection is performed by an independent inspector and/or BUYER and acceptance is authenticated, or (2) a written release is authorized by the organization who established the hold point.

MANUFACTURER – The party responsible for making the product.

MORE CONSERVATIVE – "More conservative" shall be interpreted as "more protective of the health, safety and well-being of Site workers and facilities, the public, and environment, as applicable."

NONCONFORMANCE – a deficiency in characteristic, documentation, or procedure that renders the quality of an item or activity unacceptable or indeterminate.

PRESSURE-CONTAINING COMPONENTS – Items that form the pressure-containing envelope of the piping system.

PROCUREMENT QUALITY CLAUSES (QA CLAUSES) - Procurement quality clauses are to be used for the acquisition of items and services. The clauses establish contractual obligations for quality program systems, identification, traceability, documents submittals, testing, reporting, qualification, special process controls, inspections, etc.

QUALITY ASSURANCE RECORDS – Quality assurance plans, procedures, and records, including completed documents that furnish evidence of the quality of an item or activities affecting quality.

SHALL / MUST – Denotes project requirements, compliance is required.

SHOULD – Denotes recommendation or expectation, compliance is expected.

SPECIFICATION – Refers to any design, fabrication or supply specification.

STORAGE – Holding of items in areas that address: the probable maximum period to be held, the inherent physical limitations of the item itself, and required protection from potential hazards such as fire, corrosion, chemical attack and environmental conditions. Storage also includes the requirements for maintaining the integrity and operability of items through routine maintenance, cleaning, or other means of preservation.

SUBSTITUTION – Any change or deviation from issued approved drawings, designs, methods, or contract terms and conditions. Changes in products, materials, equipment, methods of construction, and test criteria required by the Contract Documents proposed by the VENDOR after award of the Contract are considered to be requests for substitution.

VENDOR – The Company responsible for the supply of equipment or services.

WITNESS POINT – An inspection activity beyond which work shall not proceed until an inspector and/or BUYER is notified and (1) the inspection is performed and released, or (2) the inspection is deferred and can be completed at a later time, or (3) a written waiver is issued by the organization who established the witness point.

1.0 PART 1 - GENERAL

1.1 Section Scope

1.1.1 This Specification covers the minimum requirements for the welding, heat treatment, weld examination and inspection, testing, and repair of circumferential welds and branch connections in both the shop and field fabrication of piping. This specification shall be used in conjunction with ASME B31.3 and other Codes and Standards referenced within.

1.1.2 Structural steel welding is not within the scope of this specification. See CSI Section 05 00 00 "Structural Steel and Miscellaneous Steel" for structural steel welding requirements.

1.1.3 The BUYER shall be advised immediately in writing of any conflicts as soon as they are identified.

1.1.4 No material substitutions or deviations shall be made to this specification without written approval from the BUYER. All substitutions and deviations shall be submitted to the BUYER for resolution via the Request for Information (RFI) process in accordance with CSI Section 01 25 00 "Substitutions and Design Changes". If differences exist between the drawings, the specifications, or the referenced codes and standards, the BUYER shall be contacted to resolve the conflict. The BUYER's final resolution shall govern.

1.2 Related Sections

01 25 00	Substitutions and Design Changes
01 33 00	Submittals
01 40 00	Quality Assurance
01 66 00	Delivery Storage and Handling
05 00 00	Structural Steel and Miscellaneous Steel
40 05 05.11	Shop and Module Piping Fabrication and Installation
40 05 05.22	Field Fabrication and Installation of Piping
40 05 23.23	Double Containment Piping for Waste Transfer

1.3 Codes and Standards

1.3.1 Work shall be performed in accordance with the referenced codes, standards and documents for this specification.

1.3.2 The following codes and standards, of the exact issue shown, form part of the BUYER basis of design to the extent specified in the applicable sections of this document. In the event of a conflict between documents referenced herein and the requirements of this specification, the requirements of this specification shall take precedence only when this specification's requirements are more stringent or conservative. If a code or standard not listed below is to be applied to the scope (see Section 1.1), apply the latest code or standard as of April 16, 2015.

1.3.3 Government Documents

N/A

1.3.4 Non-Government Documents

1.3.4.1 American Society of Mechanical Engineers (ASME)

A. ASME B16.25 (2012); *Buttwelding Ends*
B. ASME B31.3 (2012); *Process Piping*
C. ASME Boiler and Pressure Vessel Code, Section II Materials, Part C (2013); *Specifications for Welding Rods, Electrodes and Filler Metals*
D. ASME Boiler and Pressure Vessel Code, Section V (2013); *Nondestructive Examination*
E. ASME Boiler and Pressure Vessel Code, Section IX (2013); *Welding, Brazing, and Fusing Qualifications: Qualification Standard for Welding, Brazing, and Fusing Procedures; Welders; Brazers; and Welding, Brazing, and Fusing Operators*
F. ASME NQA-1 (2008/2009A); *Quality Assurance Requirements for Nuclear Facilities Applications*

1.3.4.2 American Society of Nondestructive Testing (ASNT)

A. ASNT SNT-TC-1A (2011); *Recommended Practice for Personnel Qualification and Certification in Nondestructive Testing*

1.3.4.3 American Welding Society (AWS)

A. AWS A2.4 (2012); *Standard Symbols for Welding, Brazing, and Nondestructive Examination*
B. AWS A5.32M/A5.32 (2011); *Welding Consumables – Gases and Gas Mixtures for Fusion Welding and Allied Processes*
C. AWS D18.2 (2009); *Guide to Weld Discoloration Levels on Inside of Austenitic Stainless Steel Tube*

1.4 System Description

NOT USED

1.5 Submittals

1.5.1 Submittals that are listed within this section shall be prepared and processed in accordance with requirements of CSI Section 01 33 00 "Submittals" and shall include all of the required Quality Assurance documentation in accordance with CSI Section 01 40 00 "Quality Assurance".

1.5.2 Requests for Information (RFI) shall be submitted on form A-6003-417 (provided by BUYER).

1.5.3 Final Data Package submittal items listed in the submittals section of CSI Section 40 05 05.11 "Shop and Module Piping Fabrication and Installation", CSI Section 40 05 05.22 "Field Fabrication and Installation of Piping" and CSI Section 40 05 23.23 "Double Containment Piping for Waste Transfer" shall be submitted by the VENDOR and approved by the BUYER prior to release for shipment (or for site construction, upon completion of work).

1.5.4 Refer to the Submittals section of CSI Section 40 05 05.11, CSI Section 40 05 05.22 and CSI Section 40 05 23.23 for submittal requirements associated with shop welds, field welds or double containment welds, respectively.

1.6 Delivery, Storage & Handling

1.6.1 Refer to related CSI Section 01 66 00 "Delivery, Storage, and Handling" for general delivery, storage and handling related requirements in addition to the requirements of this section.

1.6.2 Filler metal and fluxes shall be stored and handled as recommended by the manufacturer.

1.6.3 All welding filler materials shall be stored in clean, dry areas and protected from contamination or mechanical damage.

1.6.4 After opening of hermetically sealed containers or removal of electrodes from drying ovens, all electrodes which are not immediately issued for production use shall be stored in holding ovens at 250°F minimum.

1.6.5 After opening of hermetically sealed containers or removal of electrodes from drying or holding ovens, the maximum permissible atmospheric exposure time shall be 4 hours for E70xx, 3 hours for E80xx and 1 hour for E90xx electrodes.

1.6.6 Electrodes which are not used within the exposure time limit shall be returned to holding ovens. Electrodes which are exposed to the atmosphere for longer than allowed limit shall be re-dried in accordance with manufacturer's recommendations, or scrapped.

1.7 Quality Assurance

1.7.1 Applicable Procurement Quality Clauses are summarized in the table found in the quality assurance section of CSI Section 40 05 05.11, CSI Section 40 05 05.22 and CSI Section 40 05 23.23. The full QA Clause definition and associated requirements are located in CSI Section 01 40 00.

1.7.2 There are multiple quality assurance levels applied within this document. The varying quality levels are identified on the Piping Line List, 31269-16-LST-0001, by line number.

1.7.2.1 For Commercial Quality Assurance (CQA) level items all requirements addressed within this specification apply with the exception of "Safety Significant" labeled requirements.

1.7.2.2 For Enhanced Quality Assurance (EQA) level items all requirements addressed within this specification apply with the exception of "Safety Significant" labeled requirements and that examination shall comply with Level II requirements specified within this specification.

1.7.2.3 For Full Quality Assurance (FQA) level items additional requirements such as examination are addressed within this specification and labeled as "Safety Significant". The VENDOR shall meet the applicable requirements of ASME NQA-1.

1.7.3 Hold Points

1.7.3.1 Verification points required by this section shall be in accordance with CSI Section 01 40 00 and verified by the BUYER, as applicable.

1.7.3.2 Refer to the Quality Assurance section of CSI Section 40 05 05.11, CSI Section 40 05 05.22 or CSI Section 40 05 23.23 for the witness and hold points associated with shop welds, field welds or double containment welds, respectively.

1.8 Site Conditions

Refer to CSI Section 01 66 00 Site Conditions section.

2.0 PART 2 - PRODUCTS

2.1 Manufacturers

NOT USED

2.2 Materials

2.2.1 Filler Metals

2.2.1.1 Welding consumables shall meet the requirements of ASME Boiler and Pressure Vessel Code (BPVC) Section II Part C. All covered electrodes shall be purchased in hermetically sealed containers. After opening of hermetically sealed containers, filler metals and fluxes shall be handled, stored and monitored in accordance with the Delivery, Storage and Handling section of this specifications. All weld rod/filler materials shall be submitted with Certificates of Conformance (CoC) and shall be submitted for approval. Weld gas certificates of analysis - % purity shall be submitted for approval.

2.2.1.2 Filler metals shall be limited to those specified on the approved WPS and Procedure Qualification Records (PQR) by American Welding Society (AWS) classification except that submerged arc wire and flux combinations shall be shown on the WPS by AWS classification and manufacturer's designation. Deviation from the approved WPS shall require re-qualification and re-submittal prior to use.

2.2.1.3 The use of internal purge dams such as inflatable balloons or water-soluble paper shall be used where required. All water-soluble paper purge dams shall be approved prior to use.

2.3 Equipment

NOT USED

2.4 Components

NOT USED

2.5 Fabrication

NOT USED

2.6 Shop Quality Control

2.6.1 All work associated with this specification shall be performed in accordance with the quality control requirements specified in the contract documents and CSI Section 01 40 00.

2.6.2 All welding under this specification shall be placed on hold until the WPS, PQRs and Welder Qualification Test Records (WQTRs) have been approved by the BUYER's Engineer.

2.6.3 The VENDOR shall be responsible for qualifying the welding procedures. All welders and welding procedures shall be kept current for the duration of the project. The VENDOR shall maintain a list of all welders (including their qualifications) used on this project. Records of continuity as described in ASME BPVC Section IX, QW-322 shall be submitted and subject to BUYER approval.

2.6.4 All welding and welders shall be qualified in accordance with the requirements of ASME B31.3, Para. 328.2 and ASME BPVC Section IX. Welders performing successful procedure qualification tests are considered qualified to that procedure.

2.6.5 Weld symbols shall be displayed on assembly and shop drawings in accordance with AWS A2.4. Each qualified welder shall be assigned a unique and unduplicated identifying symbol or number. Each identifying mark shall be employed exclusively by an individual welder. In the event a welder is terminated or leaves before completion of the project, his identifying mark shall be retired and shall not be reassigned to another welder.

2.6.6 All pressure containing welds shall be examined in accordance with the requirements of ASME B31.3 Chapter VI, and inspection reports shall be generated. The extent of examination shall be in accordance with each individual line shown on the Piping Line List with the extent of examination defined as follows:

2.6.6.1 Level I:

A. 100% visual examination per ASME B31.3, Para. 341.4.1(a) and 344.2 of materials, components, fabrication, joint assembly, and of alignment and supports during or after erection.
B. 5% radiographic examination per ASME B31.3, Para. 341.4.1(b) and Para. 344.5 of circumferential butt and miter groove welds and of branch connections similar to those shown in ASME B31.3, Figure 328.5.4E. If approved by the BUYER on a weld-for-weld basis, ultrasonic examination may be substituted for radiography. The ultrasonic examination shall be per ASME B31.3, Para. 344.6.
C. The liquid penetrant method or magnetic particle method shall be applied to 5% of all sockets, fillets and attachment welds. Liquid penetrant examination shall be per ASME B31.3, Para. 344.4. Magnetic particle examination shall be per ASME B31.3, Para. 344.3.

2.6.6.2 Level II:

A. 100% visual examination per ASME B31.3, Para. 341.4.1(a) and 344.2 of materials, components, fabrication, joint assembly, and of alignment and supports during or after erection.

B. 100% volumetric examination [radiographic test (RT) or ultrasonic test (UT)] of welds shall be performed in accordance with ASME B31.3 where possible (i.e., in-process examination shall not be specified) for all "Safety Significant" piping systems and piping systems permanently installed in vaults. In those cases where volumetric examination is not possible (e.g., orientation of the weld), the subject welds shall have documented in-process examination in accordance with ASME B31.3, paragraph 344.7 with liquid penetrant or magnetic particle examination specified for the root pass (see paragraph 344.7.1(e)) and shall be identified as such on the fabrication drawings. Fabrication drawings shall be approved by the BUYER prior to fabrication. The determination of whether a volumetric inspection is possible shall be made by an AWS Certified Welding Engineer (CWEng), an ASNT SNT-TC-1A Level III (RT and UT) Nondestructive Examination (NDE) examiner, or an ASNT SNT-TC-1A Level II (RT and UT) NDE examiner and shall be approved by the BUYER on a weld-for-weld basis. Individual items described in paragraph 344.7.1 shall be documented (e.g., checklist format) for each in-process examination. The in-process examinations shall not be used to meet the required representation of the welder's or the welding operator's work unless necessary to meet the required representation of work.

   Radiographic examination shall be per ASME B31.3, Para. 341.4.1(b) and Para. 344.5 for circumferential butt and miter groove welds and of branch connections similar to those shown in ASME B31.3, Figure 328.5.4E. The ultrasonic examination shall be per ASME B31.3, Para. 344.6.

C. The liquid penetrant method or magnetic particle method shall be applied to 100% of all sockets, fillets and attachment welds. Liquid penetrant examination shall be per ASME B31.3, Para. 344.4. Magnetic particle examination shall be per ASME B31.3, Para. 344.3.

2.6.7 Acceptance criteria shall be in accordance with ASME B31.3, Para. 341.3.2. Acceptance criteria stated elsewhere in applicable reference specifications shall be met.

2.6.8 Acceptance criteria for post weld heat tint for stainless steel shall be a straw-colored or yellow heat tint up to and including Number 3 on the sample numbers reference chart shown in AWS D18.2. A borescope shall be used to visually inspect the internal heat tint.

2.6.9 The applicable ASME BPVC requirements shall be detailed on the Weld Procedure Log for Piping found in Appendix B.

2.6.10 All welds as a minimum require a visual examination. NDE personnel utilized shall be certified in accordance with ASNT SNT-TC-1A to Level II or an AWS Certified Welding Inspector (CWI).

2.6.11 The VENDOR shall be responsible for providing Records of Annual Vision Tests required by ASME BPVC, Section V, Article 9, T-923 for all ASME B31.3 examination personnel.

2.6.12 Authorized procedures, specifications and records for welders, welding operators or NDE personnel shall be available for review or inspection upon request of the BUYER.

2.6.13 The VENDOR shall submit and maintain weld maps for each weld that identify at least: unique weld identification symbol or number, welder, WPS utilized, inspection results, reject rate, date completed, etc.

2.6.14 Segregation of carbon steel and stainless steel shall be maintained throughout the welding and fabrication process. Tools used for fabrication of carbon steel weldments shall not be used for stainless steel fabrication.

2.6.15 Nonconforming material shall be physically segregated from acceptable items when possible and shall be in strict accordance to the quality assurance requirements specified in CSI Section 01 40 00.

3.0 PART 3 - EXECUTION

3.1 Preparation

NOT USED

3.2 Erection, Installation & Application

3.2.1 General Welding Requirements

3.2.1.1 Welding shall not be performed when ambient temperature is less than 32°F (0°C) or when surfaces are wet from rain, snow, or ice, or during periods of high wind, unless the operator and work are properly protected.

3.2.1.2 Pads and other welded attachments shall be welded to the piping before heat treatment. Carbon steel attachments welded to stainless steel pipe are not allowed.

3.2.1.3 Fillet and socket welds shall be prepared in accordance with ASME B31.3, Para. 328.5.2. When assembling socket weld joints, the pipe or tube shall be bottomed out in the socket, marked, and then withdrawn approximately 1/16 in. prior to welding. The VENDOR's quality assurance plan shall provide means to assure this gap is present.

3.2.1.4 Butt weld ends shall be prepared in accordance with ASME B16.25.

3.2.1.5 Backing rings shall not be used and consumable inserts shall not be used without prior written approval of the BUYER's Inspector.

3.2.1.6 Each qualified welder shall identify each of their welds with their assigned, unique and unduplicated identifying symbol or number adjacent to the weld joint. Steel stamping is not allowed; use Vibro Tool or BUYER approved substitute. For stainless steel and nonferrous alloys, marking materials shall contain no more than 50 ppm chlorides and shall not contain any harmful metal or metal salts such as zinc, lead, or copper. Markings shall not be water soluble.

3.2.1.7 Peening of weld deposits and/or base materials is not permitted.

3.2.1.8 Tack welds shall be the same quality and material and be fully consumed in the welding of the groove.

3.2.2 Welding Processes

3.2.2.1 Welding of piping materials for fabrication or installation shall be per ASME B31.3.

3.2.2.2 The Gas Tungsten Arc Welding (GTAW) process shall be used to weld at least the root and hot pass on process piping and process pressure containing components that are welded from one side.

3.2.2.3 All GTAW welds must be made with the addition of filler metal.

3.2.2.4 The Gas Metal Arc Welding (GMAW), Flux Core Arc Welding (FCAW), Shielded Metal Arc Welding (SMAW), or Submerged Arc Welding (SAW) processes can be used for welding on process piping and process pressure containing components subject to proper qualification as allowed by the WPS.

3.2.2.5 The short-circuit GMAW transfer process shall not be utilized on any material without BUYER approval.

3.2.2.6 The application of heat to correct weld distortion and dimensional deviations is prohibited without BUYER approval.

3.2.3 Purge Procedure

3.2.3.1 The shielding and backing gas composition and flow rates shall be as specified in the WPS. Moisture control shall be by specification of shielding gas classification per AWS A5.32.

3.2.3.2 Internal Oxygen (O_2) levels during the welding of stainless steel shall be verified by using a calibrated O_2 analyzer, internal levels shall be less than 25 ppm.

3.2.3.3 The installation and removal of inflatable balloons shall be tracked on weld maps to ensure their removal.

3.2.4 Preheat and Post Weld Heat Treatment

3.2.4.1 Preheat and Post Weld Heat Treatment (PWHT) requirements shall be as per the applicable WPS.

3.2.4.2 Electric or gas heat sources which provide a uniform application of heat over the weld area shall be used.

3.2.4.3 Branch connections and other attachments shall be welded to the lines before commencement of heat treatment.

3.2.4.4 Preheat and post weld heat treatment shall be in accordance with the requirements of ASME B31.3, Paragraphs 330 and 331. The maximum preheat and interpass temperatures for the welding of austenitic stainless steel shall not exceed 350°F (177°C).

3.2.4.5 Preheat, when required, shall be applied prior to tacking or welding and shall be maintained until weld completion.

3.2.4.6 Time-temperature cycle records for the furnace, induction, or resistance method shall be prepared and kept on file by the VENDOR and submitted to the BUYER. These records shall identify the piece numbers involved and show a continuous recording of the time-temperature cycle. Thermocouple placement shall be recorded.

3.2.5 Weld Repairs

3.2.5.1 Any unsatisfactory condition noted shall be removed and repaired in accordance with ASME B31.3, Para 328.6.

3.2.5.2 The BUYER's Inspector reserves the right to have the VENDOR cut out and test any and all welds, irrespective of defects. The VENDOR shall furnish equipment and personnel to cut out welds designated by the BUYER's Inspector for testing. Entire welds shall be cut from the line by cutting the pipe back from each side of the weld. Coupons will be cut from pipe, per Paragraph QW-462 of the ASME BPVC, Section IX, so that the weld may be tested for tensile strength, ductility and foreign inclusions.

3.2.5.3 The cost of replacing sound welds ordered removed by the BUYER's Inspector will be borne by the BUYER. The cost of replacing or repairing defective welds including additional examinations or tests resulting from those defects shall be borne by the VENDOR.

3.2.5.4 Defects in welds shall be removed by flame or arc gouging, chipping, machining or grinding, but preferably by mechanical means, before depositing the next or successive bead. If removed by a thermal process, an additional 1/16 in. shall be removed by mechanical grinding. Excavated areas shall be magnetic particle tested (ferrous material) or liquid penetrant tested (non-ferrous material) to assure defect removal prior to depositing the next successive weld. Inspection reports shall be generated. Repair welds shall be made in accordance with welding procedures which have been previously approved for the original weld, unless an alternate procedure is approved by the BUYER.

3.2.5.5 Should laminations or split ends be discovered in the pipe, the joints containing such defects shall be cut back to a point where these defects no longer exist.

3.2.5.6 Examination and/or inspection of the completed weld repair shall be the same as the original weld or by a BUYER approved alternate method.

3.2.5.7 No more than two repairs will be permitted on any one weld.

A. Cutting out and rebeveling then rewelding is considered a weld replacement.
B. No further attempts to repair shall be carried out without the written authorization of the BUYER.
C. Weld repairs subsequent to the first two repair attempts shall be made only after receiving written approval of VENDOR's repair procedures.

3.2.5.8 Arc Strikes shall be removed and the area ground to a smooth contour. After grinding the area shall be examined by liquid penetrant or magnetic particle examination.

3.2.5.9 The metal wall thickness shall not be reduced less than that permitted in the applicable ASTM standard, without BUYER's approval.

3.3 Field Quality Control

3.3.1 Refer to the Shop Quality Control section of this specification.

3.4 Adjusting and Cleaning

3.4.1 Preparation and Cleaning

3.4.1.1 All oil, grease, scale, rust, dirt, or other foreign matter shall be thoroughly removed from the edges or surfaces of piping to be joined by tacking or welding. Uneven cut bevel faces shall be ground to a reasonably smooth and true surface. Stainless steel brushes or tools either new or only previously used on stainless steel or nickel alloys shall be used on stainless steel. Methods for cleaning (i.e., power grinding or solvent cleaning) the surfaces to be welded shall be detailed in the WPS and tailored for the beveling and welding processes.

3.4.1.2 The edges or surfaces of stainless steel parts to be joined or repaired by welding shall be cleaned by swabbing the weld area with acetone or other solvent acceptable to BUYER. No residual cleaning compound shall be left on surfaces prior to welding.

3.4.1.3 Post weld heat tint removal shall be by the pickling or electrochemical cleaning process.

3.4.1.4 Cleaning solvents for stainless steel piping shall be non-halogenated solvents containing no more than 50 ppm total chlorides or water containing no more than 50 ppm chloride.

3.5 Demonstration

NOT USED

3.6 Protection

NOT USED

4.0 LIST OF APPENDICES

4.1 Appendix A – Supporting Document(s) Issued With This Specification

4.2 Appendix B – Weld Procedure Log for Piping

Appendix A – Supporting Document(s) Issued With This Specification

Lists: 31269-16-LST-0001, Piping Line List

Appendix B – Weld Procedure Log for Piping

REV.	LINE CLASS	CODE	WELD TEST	MAT'L	P.NO.	VENDOR'S SYSTEM			PREHEAT	POST HEAT	RADIO-GRAPHY	ULTRASONIC	MAGNETIC PARTICLE	LIQUID PENETRANT	VISUAL	PMI	REMARKS
						WELD PROCEDURE	PROCESS	ELECTRODE									

SPECIFICATION

16-2-009

PIPING PROTECTIVE COATINGS

AECOM ATKINS AREVA

LOW ACTIVITY WASTE PRETREATMENT SYSTEM

Project No. 31269 (T5L01)

Document No. 16-2-009

CSI Section 40 46 00

Safety Related ☐ Non-Safety Related ☒

PIPING PROTECTIVE COATINGS

Prepared for

Washington River Protection Solutions, LLC

Revision: 0 Status: Final

MATTHEW SEAN JEND
STATE OF WASHINGTON
54709
REGISTERED
PROFESSIONAL ENGINEER

5/17/17

FOR PERMITTING
MSJ 5/17/17

REVISION PAGE

Project Name:	LAWPS	**Discipline:**	Piping
Client:	Washington River Protection Solutions, LCC	**Project Number:**	31269 (T5L01)
		Latest Revision:	0

REVISION SIGNATURES

G. Jones	5/15/17	M. Jend	5/17/17
Prepared by	**Date**	**Approved by (SDE/Lead)**	**Date**
C. Liggett	5-16-17	P. Bell	5/17/17
Checked by	**Date**	**Approved by (QA)** For D.P.	**Date**
N/A	-	D. Priebe	5/17/17
Verified by (if required)	**Date**	**Approved by (PEM)**	**Date**

Status	Rev. No.	Date	Prepared By	Pages	Description of Changes
Final	0	5/17/2017	G. Jones	30	Approved for Construction

Safety Related
Yes ☐ No ☒

Quality Level
Full QA ☐ Enhanced QA ☐ Commercial QA ☒

TABLE OF CONTENTS

1.0 PART 1 - GENERAL 1

1.1 Section Scope 1
1.2 Related Sections 2
1.3 Codes and Standards 2
1.4 System Descriptions 3
1.5 Submittals 3
1.6 Delivery, Storage & Handling 4
1.7 Quality Assurance 5
1.8 Site Conditions 6

2.0 PART 2 - PRODUCT 7

2.1 Manufacturers 7
2.2 Materials 7
2.3 Equipment 7
2.4 Components 7
2.5 Fabrication 8
2.6 Shop Quality Control 8

3.0 PART 3 - EXECUTION 9

3.1 Preparation 9
3.2 Erection, Installation & Application 9
3.3 Inspection 13
3.4 Field Quality Control 15
3.5 Adjusting and Cleaning 16
3.6 Demonstration 16
3.7 Protection 16

4.0 LIST OF APPENDICES 17

4.1 Appendix A – Supporting Document(s) Issued with this Specification 17
4.2 Appendix B – Coating System Identification Table 17
4.3 Appendix C – External Coating System Data Sheets 17

LIST OF TERMS

Abbreviations and Acronyms

Term	Definition
ASME	American Society of Mechanical Engineers
ASTM	ASTM International
CQA	Commercial Quality Assurance
DCN	Design Change Notice
DFT	Dry Film Thickness
ECN	Engineering Change Notice
EQA	Enhanced Quality Assurance
FBE	Fusion Bonded Epoxy
FQA	Full Quality Assurance
LAWPS	Low Activity Waste Pretreatment System
NCR	Nonconformance Report
PPM	Parts Per Million
RFI	Request for Information
SDS	Safety Data Sheets
VOC	Volatile Organic Compound

Units

°F	Fahrenheit
in	Inch
ppm	Parts Per Million

Definitions

BUYER – The company for whom the VENDOR is performing work or services.

COMMERCIAL QUALITY ASSURANCE (CQA) - Level of controls for those items, services, or processes where, based on an evaluation of risk or nuclear safety, no additional quality controls beyond the providers published or stated attributes of the item, service, or process is required.

DESIGN CHANGE – Within the context of this specification, a DESIGN CHANGE is technically equivalent to a SUBSTITUTION (see SUBSTITUTION definition below). However, the term DESIGN CHANGE may be used to refer to more significant changes to the design compared to a simple substitution.

DEVIATION – Any departure from the requirements contained in the purchase order and specification which VENDOR proposes to incorporate if approved by BUYER.

ENHANCED QUALITY ASSURANCE (EQA) - Level of controls for those items, services, or processes where, based on an evaluation of risk or nuclear safety, additional controls beyond the providers published or stated attributes of the item, service, or process are needed to verify critical attributes.

FULL QUALITY ASSURANCE (FQA) - Level of controls applied for items services, or processes that are commensurate with the controls invoked under ASME NQA-1 or other appropriate national consensus standard.

HANDLING - The movement or transportation of items following receipt from offsite/ project locations. This includes movement within storage areas and movement/transportation from receipt or storage areas to field locations. Handling requirements include the need for special handling tools and equipment, restrictions on material composition of surfaces in contact with the item, protection against damage or deterioration, which could occur during movement and placement, protection against physical damage due to excessive shock or vibration, and protection against entry of dirt, water, or other contaminants.

HOLD POINT – A mandatory inspection activity beyond which work shall not proceed until (1) the inspection is performed by an independent inspector and/or BUYER and acceptance is authenticated, or (2) a written release is authorized by the organization who established the hold point.

MANUFACTURER – The party responsible for making the protective coating.

MORE CONSERVATIVE – "More conservative" shall be interpreted as "more protective of the health, safety and well-being of Site workers and facilities, the public, and environment, as applicable."

NONCONFORMANCE – A deficiency in characteristic, documentation, or procedure that renders the quality of an item or activity unacceptable or indeterminate.

PRESSURE-CONTAINING COMPONENTS – Items that form the pressure-containing envelope of the piping system.

PROCUREMENT QUALITY CLAUSES (QA CLAUSES) - Procurement quality clauses are to be used for the acquisition of items and services. The clauses establish contractual obligations for quality program systems, identification, traceability, documents submittals, testing, reporting, qualification, special process controls, inspections, etc.

PRODUCT DATA – Printed information including, but not limited to, catalog cuts, color charts, illustrations, diagrams, templates, performance curves, brochures, and other forms of Product literature.

QUALITY ASSURANCE RECORDS – Quality assurance plans, procedures, and records, including completed documents that furnish evidence of the quality of an item or activities affecting quality.

SHALL / MUST – Denotes project requirements, compliance is required

SHIPPING – The movement of items from an off-site/project location (VENDOR, warehouse, etc.) to an on-site/project location, or movement from an onsite/ project location to an off-site/project location. Shipping requirements include packaging and securing of items to protect against damage or deterioration which could occur during movement and transportation, protection against physical damage due to excessive shock or vibration, protection against entry of dirt, water, or other contaminants, and protection against other environmental conditions such as temperature or humidity.

SHOULD – Denotes recommendation or expectation, compliance is expected.

SUBSTITUTION – Any change or deviation from issued approved drawings, designs, methods, or contract terms and conditions. Changes in products, materials, equipment, methods of construction, and test criteria required by the Contract Documents proposed by the VENDOR after award of the Contract are considered to be requests for substitution.

STORAGE – Holding of items in areas that address: the probable maximum period to be held, the inherent physical limitations of the item itself, and required protection from potential hazards such as fire, corrosion, chemical attack and environmental conditions. Storage also includes the requirements for maintaining the integrity and operability of items through routine maintenance, cleaning, or other means of preservation.

SPECIFICATION – Refers to any design, fabrication or supply specification.

VENDOR – The Company responsible for the supply of equipment or services.

WITNESS POINT – An inspection activity beyond which work shall not proceed until an inspector and/or BUYER is notified and (1) the inspection is performed and released, or (2) the inspection is deferred and can be completed at a later time, or (3) a written waiver is issued by the organization who established the witness point.

1.0 PART 1 - GENERAL

1.1 Section Scope

1.1.1 This specification covers the minimum requirements for:

1.1.1.1 The surface preparation, application and inspection of protective coatings for safety and non-safety related piping systems shown on the drawings or otherwise specified.

1.1.1.2 Coating systems for insulated and uninsulated substrates of piping above and below grade.

1.1.2 This specification excludes:

1.1.2.1 Structural steel, equipment, vessels and tanks.

1.1.2.2 Any special requirements for the fabrication of double containment piping. See CSI Section 40 05 23.33 "Double Containment Piping for Waste Transfer" for double containment piping requirements.

1.1.2.3 Requirements for shop and module fabrication, erection and testing of piping. See CSI Section 40 05 05.11 "Shop and Module Fabrication and Installation of Piping" for piping shop and module installation requirements.

1.1.2.4 Requirements for field fabrication, erection and testing of piping. See CSI Section 40 05 05.22 "Field Fabrication and Installation of Piping" for piping field installation requirements.

1.1.3 This specification shall be used in conjunction with ASME B31.3 and other referenced codes and standards.

1.1.4 The BUYER shall be advised immediately in writing of any conflicts as soon as they are identified.

1.1.5 No material substitutes or deviations shall be made to this specification without written approval from the BUYER. All substitutions and deviations shall be submitted to the BUYER for resolution via the request for information (RFI) process in accordance with CSI Section 01 25 00 "Substitutions". If differences exist between the drawings, the specifications, or the referenced codes and standards, the BUYER shall be contacted to resolve the conflict. The BUYER's final resolution shall govern.

1.2 Related Sections

01 25 00	Substitutions
01 33 00	Submittals
01 40 00	Quality Assurance
01 60 00	Labeling
01 66 00	Delivery Storage and Handling
40 05 05.11	Shop and Module Piping Fabrication and Installation
40 05 05.22	Field Fabrication and Installation of Piping
40 05 23.33	Double Containment Piping for Waste Transfer

1.3 Codes and Standards

1.3.1 Work shall be performed in accordance with the referenced codes, standards and documents for this specification.

1.3.2 The following codes and standards, of the exact issue shown, form part of the BUYER basis of design to the extent specified in the applicable sections of this document. In the event of a conflict between documents referenced herein and the requirements of this specification, the requirements of this specification shall take precedence only when this specification's requirements are more stringent or conservative. If a code or standard not listed below is to be applied to the scope (see Section 1.1), apply the latest code or standard as of April 16, 2015.

1.3.3 Government Documents

1.3.3.1 N/A

1.3.4 Non-Government Documents

1.3.4.1 American Society of Mechanical Engineers (ASME)

A. ASME B31.3 (2012); *Process Piping*

1.3.4.2 ASTM International (ASTM)

A. ASTM D3359 (2009); *Standard Test Methods for Measuring Adhesion by Tape Test*
B. ASTM D4285 (1983 R2012); *Standard Test Method for Indicating Oil or Water in Compressed Air*
C. ASTM D4417 (2014); *Standard Test Methods for Field Measurement of Surface Profile of Blast Cleaned Steel*
D. ASTM D4541 (2009); *Standard Test Method for Pull-Off Strength of Coatings Using Portable Adhesion Testers*
E. ASTM D5162 (2015); *Standard Practice for Discontinuity (Holiday) Testing of Nonconductive Protective Coatings on Metallic Substrates*

F. ASTM E337 (2015); *Standard Test Method for Measuring Humidity with a Psychrometer (the Measurement of Wet- and Dry-Bulb Temperatures)*

1.3.4.3 American Water Works Association (AWWA)

A. AWWA C213 (2015); *Fusion-Bonded Epoxy Coatings and Linings and Exterior of Steel Water Pipelines*

1.3.4.4 Society for Protective Coatings (SSPC)

A. SSPC AB 1 (2015); *Mineral and Slag Abrasives*
B. SSPC PA 1 (2000 E2004); *Shop, Field, and Maintenance Painting of Steel*
C. SSPC PA 2 (2015); *Measurement of Dry Coating Thickness with Magnetic Gages*
D. SSPC SP 1 (2015); *Solvent Cleaning*
E. SSPC SP 2 (1982 E2000 E2004); *Hand Tool Cleaning*
F. SSPC SP 3 (1982 E2004); *Power Tool Cleaning*
G. SSPC SP 5 (2007); *White Metal Blast Cleaning*
H. SSPC SP 7 (2007); *Brush-off Blast Cleaning*
I. SSPC SP 10 (2007); *Near-White Metal Blast Cleaning*
J. SSPC VIS 1 (2002 E2004); *Guide and Reference Photographs for Steel Surfaces Prepared by Dry Abrasive Blast Cleaning*

1.4 System Descriptions

NOT USED

1.5 Submittals

1.5.1 Submittals that are listed within the section shall be prepared and processed in accordance with requirements of CSI Section 01 33 00 "Submittals" and shall include all of the required Quality Assurance documentation in accordance with CSI Section 01 40 00 "Quality Assurance".

1.5.2 Requests for Information (RFI) shall be submitted on form A-6003-417 (provided by BUYER).

1.5.3 Final Data Package submittal items listed in section 1.5.4 through 1.5.12 below shall be submitted by the VENDOR and approved by the BUYER upon completion of work or for site construction, upon completion of work.

1.5.4 Design Codes and standards including revision and/or issue date shall be provided by the VENDOR.

1.5.5 A quality system for materials specifying testing per ASME shall be provided in accordance with QA Clause B10.

1.5.6 Calibration certificates for VENDOR owned test instruments and measuring tools that will be used during fabrication, inspection, and testing in accordance with QA Clause B12.

1.5.7 A fabrication, inspection, and test plan, including a cleaning procedure, shall be provided (for inspections and tests specified in Section 3.3) in accordance with QA Clause B13.

1.5.8 Nonconformance documentation and reports (NCR) shall be provided in accordance with QA Clause B22. NCRs dispositioned as "use-as-is" or "repair" shall be submitted prior to component acceptance.

1.5.9 A product data sheet shall be provided for each coating material in accordance with QA Clause B33.

1.5.10 The following inspections and test reports shall be provided in accordance with QA Clause B52:

1.5.10.1 Cleaning and inspection of cleaning reports, including:

A. Date and name of VENDOR and responsible individual.
B. Inspection or examination records.
C. Cleaning methods.
D. Certification of visual examination for surface preparation, surface profile, materials, humidity data, temperature data and coating total Dry Film Thickness data of coating.
E. A ppm halogen content test analysis.

1.5.11 VENDOR shall submit Safety Data Sheets (SDS) for surface coatings and all such materials being provided. Coating materials shall be within their valid shelf life period at the time of application and shall be identified in accordance with QA Clause B43.

1.5.12 VENDOR shall submit approved design changes (Engineering Change Notice's (ECN's) and Design Change Notice's (DCN's)) per BUYER's procedures.

1.6 Delivery, Storage & Handling

1.6.1 Refer to related CSI Section 01 66 00 "Delivery, Storage and Handling" for general delivery, storage and handling related requirements in addition to the requirements of this section.

1.6.1.1 Coated items shall not be handled or moved until all coatings have been properly dried or cured in accordance with the coating manufacturer's instructions.

1.6.1.2 Coated items shall be handled with equipment such as wide belt slings, web belts, and wide padded skids selected to prevent damage to the coating.

1.6.1.3 Handling equipment likely to cause damage to the coating shall not be used. Items such as chains, cables, hooks, tongs, metal bars and narrow skids shall not be permitted to come in contact with the coating.

1.6.1.4 Dragging or skidding coated pipe shall not be permitted.

1.6.1.5 Coated items shall be loaded, padded and secured for transport in a manner such that the coating will not be damaged in transit.

1.6.1.6 Coated items shall be separated so that all the items do not bear against each other.

1.6.1.7 Coated items shall be stacked off the ground using suitable means (e.g., parallel height ridges or rock-free sand, wooden timbers placed under the uncoated pipe ends, etc.) to avoid damage to the coating.

1.7 Quality Assurance

1.7.1 Applicable QA Clauses are summarized in the table below. The full QA Clause definition and associated requirements are location in CSI Section 01 40 00.

Table 1.7.1-1 Procurement Quality Clause

SUPPLIER FABRICATION
B10 Quality System for Materials Specifying Testing Per ASME
B12 Supplier Use of Calibrated Equipment
B13 Fabrication/Inspection/Test Plan
B22 Nonconformance Documentation and Reporting
MATERIAL IDENTIFICATION
B33 Identification of Items with Catalog Cut
B43 Identification of Age Control Items
TESTING AND TEST DATA
B52 Inspection and Test Report

1.7.2 There is one quality assurance level applied within this document.

1.7.2.1 Coating systems within the scope of this specification are classified as Commercial Quality Assurance (CQA) level and all requirements addressed within this specification apply.

1.7.3 Hold Points

1.7.3.1 The following verification points required by this section shall be in accordance with CSI Section 01 40 00 and verified by the BUYER, as applicable.

1.7.3.2 At a minimum, the following witness and hold points shall apply:

Table 1.7.3.2-1 Hold Point Verification

Verification Point Description	Type of Verification
Prior to Fabrication	H
Prior to Initial Production Welding (First Weld*)	N/A
Prior to Testing	N/A
Prior to Inspections	H
Prior to Acceptance Testing	N/A
Prior to Shipping	H

*First Weld Strike for Each Weld Procedure (H) Hold

1.7.3.3 The VENDOR shall provide required notifications of verification points in accordance with CSI Section 01 40 00 as applicable, and shall not proceed past required hold points without written authorization from the BUYER QA representative.

1.8 Site Conditions

1.8.1 Refer to CSI Section 01 66 00 Site Conditions section.

2.0 PART 2 - PRODUCT

2.1 Manufacturers

2.1.1 Materials which are specified by manufacturer and/or proprietary name on engineering datasheets are so specified only for the purpose of establishing the type and standard of quality required. The manufacturer and/or proprietary names do not preclude the use of BUYER-approved substitutes. Where names of manufacturers are listed, the order of listing is not indicative of an order of preference. All substitutions shall be per CSI Section 01 25 00. Requests for substitutes shall be accompanied with manufacturer's catalog data.

2.2 Materials

2.2.1 General

2.2.1.1 All materials shall be asbestos-free, noncorrosive, compatible with adjacent materials and used in accordance with the manufacturer's recommendations.

2.2.1.2 Materials shall meet or exceed the requirements specified herein. Any additional materials which may be required, but which are not described hereinafter, will be subject to the BUYER's approval.

2.2.1.3 Materials shall be new and shall be used before the expiration date. Materials that have exceeded shelf life and dates shall be removed from the site and replaced with new material.

2.2.1.4 Coating materials shall be in accordance with BUYER's external coating system data sheets.

2.2.1.5 All solvents used for thinning shall be in accordance with the coating manufacturer's recommendations.

2.2.1.6 Coating materials shall be furnished in the coating manufacturer's unopened containers, clearly marked and kept covered, clean, and protected.

2.2.1.7 All materials shall be handled and stored in accordance with the coating manufacturer's latest published instructions.

2.3 Equipment

NOT USED

2.4 Components

NOT USED

2.5 Fabrication

NOT USED

2.6 Shop Quality Control

2.6.1.1 See Field Quality Control section 3.4.

3.0 PART 3 - EXECUTION

3.1 Preparation

3.1.1 Coating application shall not be applied to a particular item until installation, pressure testing, non-destructive examination and heat tracing (if applicable) have been completed, unless otherwise approved by the BUYER.

3.1.2 All surfaces to be painted shall be properly and thoroughly cleaned to remove oil, grease, loose scale, first, salts, and visible rust or other surface contaminations. Surfaces shall be clean and thoroughly dry before the application coating.

3.1.2.1 Dew point, relative humidity, and surface temperature shall be determined before surface preparation.

A. Readings are required at 4-hour intervals or at other time intervals approved by the BUYER.
B. Alternatively, continuous monitoring of dew point and relative humidity may be performed using systems established or accepted by the BUYER.
C. Substrate temperature shall be 5°F minimum above the dew point.
D. Work shall not proceed if the ambient temperature or relative humidity is not in accordance of this Practice.

3.1.2.2 Air supply for blast cleaning, pneumatic tools, and spray equipment shall be tested for oil and water contamination in accordance with ASTM D4285, and as follows:

A. All lines shall be tested separately.
B. Testing shall be performed at the beginning and end of each work shift and at not less than 4-hour intervals.
C. If contamination is discovered all necessary corrective actions shall be made and the air supply retested.
D. Surfaces determined to have been blasted with contaminated air shall be cleaned with solvent and re-blasted with clean air and abrasive.
E. Coatings determined to have been applied using contaminated air shall be removed and reapplied using clean air.

3.1.3 Cleaning method and degree of cleanliness and anchor profile shall be in accordance with the manufacturer's recommendations and for the applicable coating system.

3.1.4 All blast-cleaned surfaces shall be inspected for proper cleaning before coating.

3.2 Erection, Installation & Application

3.2.1 Application shall be in accordance with the coating manufacturer's recommendations, SDS, and the requirements specified herein.

3.2.2 All application equipment shall be provided as recommended by the coating manufacturer, shall be clean and in good condition, and shall be suitable for applying the coating as specified.

3.2.3 Coating shall not be applied while any of the following conditions are present or expected before the paint dries:

3.2.3.1 Temperature: Ambient, substrate, or coating material temperatures are above 120°F, below 50°F, or outside the range recommended by the coating manufacturer.

3.2.3.2 Humidity: The ambient or substrate temperature is less than 5°F above the dew point or outside the range recommended by the coating manufacturer. Dew point temperature shall be determined by sling psychrometer in accordance with ASTM E337 or equivalent electronic device at the location where work is being performed.

3.2.3.3 Wind: During strong or gusty wind conditions, particularly for spray application.

3.2.3.4 Weather: During rain, snow, or fog or on damp surfaces or surfaces that may have frost.

3.2.4 Piping components to be coated shall be in accordance with Appendix B and Appendix C.

3.2.5 Unless otherwise specified, the following surfaces shall not be coated:

3.2.5.1 Interior surfaces of piping and equipment

3.2.5.2 Nonferrous metals

3.2.5.3 Galvanized or metallized surfaces

3.2.5.4 Insulation jacketing

3.2.5.5 Nonmetallic materials such as wood, tile, brick, concrete, and thermoplastics

3.2.5.6 Cast iron products such as manhole covers and grating

3.2.6 The following surfaces shall not be coated and shall be protected from surface preparation and painting activity in the area:

3.2.6.1 Valve stems, flange faces, and other machined contact surfaces

3.2.6.2 Internal surfaces of valves

3.2.6.3 Electrical contact points

3.2.6.4 Nameplates and identification tags

3.2.6.5 Glass surfaces of gage glasses and sight glasses

3.2.6.6 Resilient seal materials

3.2.6.7 Gasket contact surfaces

3.2.6.8 Equipment identification

3.2.6.9 Inspection point identification markers

3.2.6.10 Other methods (e.g. Test plugs or joints) to isolate the system are allowed, but the selected method shall fulfill all requirements of ASME B31.3 and be the most economical without damaging the pipe

3.2.6.11 6 inches from end of pipe on spool sections getting welded in the field

3.2.7 Mixing and Thinning

3.2.7.1 Materials shall be mixed and thinned in accordance with the coating manufacturer's written instructions.

3.2.7.2 All mixing shall be done in clean containers that are free from grease paints, and other contaminants. Containers shall be kept covered to prevent contamination by dust, dirt, or rain.

3.2.7.3 Mixing of partial kits shall not be permitted.

3.2.7.4 Inorganic zinc primers and all pigmented coatings shall be strained before application in accordance with the coating manufacturer's written instructions.

3.2.7.5 Thinning shall not exceed the maximum allowable volatile organic compound (VOC) level for the coating involved.

3.2.8 Primers

3.2.8.1 Primers shall be applied before flash rusting or other contamination occurs.

3.2.8.2 Previously coated surfaces shall be protected from contamination and overspray.

3.2.8.3 Primer shall have a uniform thickness over welds, edges, and corners and shall be free of mud cracking.

3.2.8.4 Primer shall not be applied within 4 inches of unblasted surfaces or 2 inches from the edges to be field welded.

3.2.8.5 Inorganic zinc primer shall be applied using an agitated pot.

3.2.9 Topcoating

3.2.9.1 Each coat of paint shall be of a contrasting color to indicate the extent of coverage.

3.2.9.2 Each coat of multiple-coat systems shall be allowed to cure sufficiently in accordance with the coating manufacturer's directions before topcoating.

3.2.9.3 Minimum drying time between coats shall be in compliance with the coating manufacturer's instructions.

3.2.9.4 If the maximum recoat time has been exceeded, previously applied coatings shall be roughened before topcoating or treated in accordance with the coating manufacturer's directions.

3.2.9.5 Before topcoating over an inorganic zinc primer, the cure of the primer shall be verified.

3.2.9.6 Inorganic zinc primers shall have all overspray removed with a stiff bristle brush or wire screen and shall be clean and thoroughly cured before topcoating.

3.2.9.7 If spray applying over inorganic zinc primers, a mist coat shall be used to avoid bubbling. The mist coat may be a thinned coat or applied by a quick pass of the spray gun before applying the full coat, but sufficient time shall be allowed for solvent evaporation.

3.2.10 Film Thickness

3.2.10.1 Wet film thickness shall be checked during the application of each coat to assure the specified dry film thickness (DFT) is met.

3.2.10.2 Wet film thickness measurements are not suitable for some materials such as inorganic zinc primers, flake filled epoxies, etc.

3.2.10.3 The DFT of each coat on carbon steel shall be checked in accordance with the procedures defined by SSPC-PA 2 using a magnetic gage that has been properly calibrated.

3.2.10.4 Coating thickness on nonmagnetic substrates shall be checked using a Type 2 gage suitable for use on nonferrous substrates.

3.2.10.5 Coating thickness may also be measured using non-magnetic coatings on magnetic substrates or coatings on non-magnetic substrates. However, sampling procedures shall follow SSPC-PA 2.

3.2.10.6 Measurements shall be taken after removal of dry spray and overspray.

3.2.10.7 All gages shall be adjusted to compensate for the substrate effect before application of any coating.

3.2.11 Defects

3.2.11.1 Each coat of paint shall be of a uniform film, free of defects (e.g., pinholes, voids, bubbles, skips, runs, sags, blisters, wrinkles, and mud cracking), and of a uniform thickness and appearance.

3.2.11.2 Care shall be exercised to prevent overspray, spillage, or application of coatings to surfaces for which they are not intended.

3.2.11.3 Dry spray and over spray shall be removed.

3.2.11.4 DFT of each coat shall not be outside the specified range.

3.2.11.5 Finished coating system shall be checked for holidays in accordance with ASTM D5162.

3.2.12 Touch-Ups (Field Touch-Ups, Repairs)

3.2.12.1 Surface preparation for carbon steel

3.2.12.2 Before application of any coat, all defects and damage to the previous coat(s) shall be repaired. Damage to finished work shall be thoroughly cleaned and recoated.

3.2.12.3 Damaged areas shall be spot-blast cleaned, power tool cleaned, or hand tool cleaned as necessary to restore any exposed steel to an original degree of cleanliness.

3.2.12.4 All loose, cracked, and damaged coating shall be removed and the adjacent sound coating feathered back approximately 2 inches to form a uniform and smooth surface.

3.2.12.5 Feathering shall be done by hand or power sanding with a grit wheel or sandpaper.

3.2.12.6 The prepared surface shall be free of loose, burnt, or blistered coating.

3.2.12.7 Unless specified otherwise, the coating used for repair shall be the same as the original and shall have the same DFT.

3.2.13 Job Stencil

3.2.13.1 After the coating system has been applied in the shop or field, if specified by the BUYER, a job stencil shall be applied in a prominent location to identify the coating system used and shall comply with CSI Section 01 60 00 "Labeling", as applicable.

3.2.13.2 Stencil shall be of 1 inch high letters of a color contrasting with the finished paint.

3.2.13.3 Stencil shall provide the following information:

3.2.13.4 Top line shall be used for the Coatings Systems Number.

3.2.13.5 Second line shall be used for SSPC surface preparation.

3.2.13.6 Next line(s) shall be used for each coat of paint, followed by the date of application (month and year).

3.2.13.7 Last line shall be the name of the shop or field coating contractor.

3.2.13.8 If there are a large number of structural shapes, a job stencil shall be applied to about 10 percent of the pieces.

3.2.13.9 Small pieces such as lap flanges, hangers, etc. shall not be stenciled.

3.3 Inspection

3.3.1 General

3.3.1.1 All inspections and tests shall be performed that are necessary to ensure that surface preparation and coating application comply with the requirements of this specification.

3.3.1.2 BUYER's inspector(s) shall be given adequate notice before the start of surface preparation and coating application to witness the work.

3.3.1.3 BUYER's inspector(s) shall have the option to witness or repeat any of these functions as necessary.

3.3.1.4 All materials, equipment, and work shall be available to BUYER's inspector(s) at all times.

3.3.1.5 BUYER's inspector(s) shall have access to the work site during the progress of the work and the right to conduct any inspection or testing deemed necessary to ensure that the coatings are properly applied.

3.3.1.6 All instruments used in inspection activities (e.g., thermometer, pyrometers, hygrometers, thickness gauges, profile gauges, and holiday detectors) shall be furnished in proper working order and calibrated before use.

3.3.1.7 Recirculated shot and grit used for abrasive cleaning shall be tested for the presence of oil by immersing in water and checking for oil flotation.

A. Tests shall be made at the start of blasting, at 4-hour intervals thereafter, and at the end of blasting.
B. Contaminated abrasive shall be replaced with clean abrasive and retested before proceeding.
C. All steel blasted since the last satisfactory test shall be re-blasted.

3.3.1.8 Abrasive-cleaned surfaces shall be inspected for proper surface cleanliness and anchor profile using SSPC visual comparators.

A. Surface preparation anchor profile shall be verified using either coarse or extra-coarse replica tape (as required by profile depth) and a spring-loaded micrometer in accordance with ASTM D4417, Method C.
B. SSPC-VIS 1 visual standards shall be used for confirming the degree of surface cleanliness if adequacy of cleaning is in question.

3.3.1.9 If coating adhesion or intercoat adhesion are of suspect quality, the adhesion shall be checked periodically.

A. Adhesion may be assessed by means of portable pull-off adhesion tester in accordance with ASTM D4541 or one of the appropriate tape tests in accordance with ASTM D3359.
B. Adhesion test method shall be approved by the BUYER.
C. Acceptable adhesion classifications or pull-off strengths shall be in accordance with coating material manufacturer's recommendations and approved by the BUYER.

3.3.1.10 Completed paint job shall pass inspection by the BUYER's inspector(s).

3.3.1.11 Any work found not to be in accordance with the requirements specified herein shall be corrected.

3.3.2 Testing and Inspection

3.3.2.1 All materials and application is subject to inspection by BUYER.

3.3.2.2 The BUYER's inspector shall review the quality procedures to verify the quality procedures are appropriate for the scope of work being performed. The inspector shall verify the quality procedures have been approved by the BUYER and have been implemented by the quality personnel.

3.3.3 Before the completion of coating, the BUYER's inspector shall:

3.3.3.1 Visually inspect the coated surface for defects and uniform appearance.

3.3.3.2 Verify the total DFT is within the specified range.

3.3.3.3 Verify that all identified repairs have been properly made.

3.3.3.4 Verify that the coating system is cured.

3.4 Field Quality Control

3.4.1 Precautions for Austenitic Stainless Steel and Nonferrous Metals

3.4.1.1 All austenitic stainless steel and nonferrous metals shall be protected from blasting, overspray, and coatings not intended for stainless steel surfaces, especially coatings containing zinc.

3.4.1.2 Abrasives for use on stainless steel shall be in accordance with SSPC-AB-1 and shall be free of metals.

3.4.1.3 If hand or power tool cleaning is required on stainless steel or nonferrous metals, stainless steel wire brushes that have not been previously used on carbon steel surfaces shall be used.

3.4.1.4 Coatings and solvents for use on stainless steel and nonferrous metals shall be free of substances such as chlorides, sulfur, halogens, or metallic pigments that can harmfully affect stainless steel or nonferrous metals.

3.4.1.5 Color-coding and fabrication markings applied directly on stainless steel and nonferrous metals shall be applied with low-chloride markers.

3.4.2 Precautions for Cathodically Protected Substrates

3.4.2.1 All coatings being used in cathodically protected systems shall be tested and evaluated for cathodic disbondment.

3.4.2.2 Coatings for the cathodically protected systems shall be applied in accordance with this Practice and the coating system data sheet.

3.4.2.3 Where mechanical connections are used, either for shop or field applications, the original coating shall be removed in accordance with SSPC-SP2 or SSPC-SP3. After all connections are made, coating shall be applied over all connections in accordance with this Practice and the coating system data sheet.

3.5 Adjusting and Cleaning

NOT USED

3.6 Demonstration

NOT USED

3.7 Protection

NOT USED

4.0 LIST OF APPENDICES

4.1 Appendix A – Supporting Document(s) Issued with this Specification

4.2 Appendix B – Coating System Identification Table

4.3 Appendix C – External Coating System Data Sheets

Appendix A – Supporting Document(s) Issued with this Specification

Lists:	31269-16-LST-001, Piping Line List
Drawings:	Piping Orthographic Drawings and Piping Isometric Drawings, as indicated in the purchase order.

Appendix B – Coating System Identification Table

Above Ground – Pipe, Fabricated Pipe Spools, To Include Attached Valves, Pipe Supports		
Items	**Operating Temperature (°F)**	**Coating System**
Carbon Steel		
Uninsulated	T ≤ 200	24
Uninsulated	200 >T ≤ 350	10
Insulated	T ≤ 350	19
Stainless Steel		
Uninsulated	All	NO COATING
Insulated	T ≤ 350	28

BELOW Ground – Pipe, Fabricated Pipe Spools, To Include Attached Valves, Pipe Supports		
Items	**Operating Temperature (°F)**	**Coating System**
Carbon Steel		
All	All	FBE

Appendix C – External Coating System Data Sheets

COATING SYSTEM NO. 10
INORGANIC ZINC / SILICONE ACRYLIC

Description:
Inorganic Zinc (IZ) primer with a two-coat silicone acrylic finish.

Surfaces:
Uninsulated Carbon Steel for pipe with operating temperatures greater than 200°F and less than or equal to 350°F.
Do not apply to stainless or nickel alloy surfaces.

Surface Preparation:
Abrasive blast to SSPC SP-10 (Sa 2.5) with a nominal profile of 2 mils.

System

Coat No.	Generic Type	Application Method	Minimum DFT (mils)	Maximum DFT (mils)
1	Inorganic Zinc	Spray	2.5	4.0
2	Silicone Acrylic	Spray	0.5	1.0
3	Silicone Acrylic	Spray	1.0	2.0

Notes:
Unless otherwise specified, refer to the coating manufacturer's data sheets for information on the recommended application temperature range, wet film thickness, approximate coverage in square feet/gallon, pot life, and drying times to touch, handle, and cure for each coating product.

Surface Preparation:
Mixing according to manufacturer's recommendations and SSPC PA-1.

COATING SYSTEM NO. 19
EPOXY NOVALAC

Description:
Two coated catalyzed epoxy novolac system.

Surfaces:
Insulated Carbon Steel for pipe with operating temperatures less than or equal to 350°F. To be suitable for use with heat tracing.

Surface Preparation:
Abrasive blast to SSPC SP-10 (Sa 2.5) with a nominal profile of 2 mils.

System

Coat No.	Generic Type	Application Method	Minimum DFT (mils)	Maximum DFT (mils)
1	Epoxy Novolac	Spray Brush Roller	4.0	6.0
2	Epoxy Novolac	Spray Brush Roller	4.0	6.0

Notes:
Unless otherwise specified, refer to the coating manufacturer's data sheets for information on the recommended application temperature range, wet film thickness, approximate coverage in square feet/gallon, pot life, and drying times to touch, handle, and cure for each coating product.

Surface Preparation:
Mixing according to manufacturer's recommendations and SSPC PA-1.

COATING SYSTEM NO. 24
EPOXY MASTIC / URETHANE

Description:
Epoxy mastic primer with an aliphatic urethane finish.

Surfaces:
Uninsulated Carbon Steel pipe with operating temperatures less than or equal to 200°F.
Can be used on stainless steel or nonferrous alloys, usually for color coding. Can be applied over manufacturer's standard finish items where abrasive blast cleaning for top coating is not practical. This system is also suitable for galvanized surfaces.

Surface Preparation:
For bare metal, abrasive blast to SSPC SP-6 (Sa 2) with a nominal profile of 2 to 3 mils.To coat a manufacturer's standard paint, prepare the surface in accordance with SSPC SP-2 or -3 (St 2 or St 3). For galvanized surfaces, prepare in accordance with SSPC SP-7 (Sa 1), suitably weathered, or in accordance with manufacturer's recommendation.

System

Coat No.	Generic Type	Application Method	Minimum DFT (mils)	Maximum DFT (mils)
1	Epoxy Mastic	Spray Brush Roller	4.0	6.0
2	Aliphatic Urethane Finish	Spray Brush Roller	2.0	3.0

Notes:
Unless otherwise specified, refer to the coating manufacturer's data sheets for the recommended application temperature range, wet film thickness, approximate coverage in square feet/gallon, pot life, and drying times to touch, handle, and cure for each coating product.

COATING SYSTEM NO. 28
EPOXY NOVOLAC

Description:
Catalyzed epoxy novolac system.

Surfaces:
Insulated Stainless Steel pipe with operating temperatures less than or equal to 350°F. To be suitable for use with heat tracing.

Surface Preparation:
Abrasive blast to SSPC SP-7 (Sa 1) with a nominal profile of 1 mil.

System

Coat No.	Generic Type	Application Method	Minimum DFT (mils)	Maximum DFT (mils)
1	Epoxy Novolac	Spray Brush Roller	4.0	6.0

Notes:
Unless otherwise specified, refer to the coating manufacturer's data sheets for information on the recommended application temperature range, wet film thickness, approximate coverage in square feet/gallon, pot life, and drying times to touch, handle, and cure for each coating product.

COATING SYSTEM FBE
FUSION-BONDED EPOXY (FBE)

Description:
A system of thermosetting epoxy powder for underground per AWWA C213.

Surfaces:
Carbon Steel, Underground.

Surface Preparation:
Abrasive blast to SSPC SP-5 (Sa 3) with a nominal profile of 3 mils.

System

Coat No.	Generic Type	Application Method	Minimum DFT (mils)	Maximum DFT (mils)
1	Epoxy	Electrostatic Spray Only	20.0	28.0

Notes:
Unless otherwise specified, refer to the coating manufacturer's data sheet(s) for information on the recommended application temperature and other technical information.

SPECIFICATION

17-2-001

COMMON MOTOR REQUIREMENTS FOR PROCESS & NON-PROCESS EQUIPMENT

AECOM ATKINS AREVA

LOW ACTIVITY WASTE PRETREATMENT SYSTEM

Project No. 31269 (T5L01)

Document No. 17-2-001

CSI Section 40 05 93

Safety Related ☒ Non-Safety Related ☐

COMMON MOTOR REQUIREMENTS FOR PROCESS & NON-PROCESS EQUIPMENT

Prepared for

Washington River Protection Solutions, LLC

Revision: 0 Status: Final

LINDA MARIE COLLINS
STATE OF WASHINGTON
34832
REGISTERED
PROFESSIONAL ENGINEER

5/15/2017

For Permitting

AECOM ATKINS AREVA

Project Number: 31269 (T5L01)
Doc. No.: 17-2-001
Date: May 17, 2017
Revision: 0

REVISION PAGE

Project Name:	LAWPS	**Discipline:**	Electrical
Client:	Washington River Protection Solutions	**Project Number:**	31269 (T5L01)
		Latest Revision:	0

REVISION SIGNATURES

Ros Suddaby	Ros Suddaby Digitally signed by Ros Suddaby DN: cn=Ros Suddaby, o, ou, email=rosalie.suddaby@aecom.com, c=US Date: 2017.05.15 12:53:31 -06'00'		Linda Collier	Linda Collier Linda Collier 2017.05.15 16:28:02 -06'00'	
Prepared by		**Date**	**Approved by (SDE/Lead)**		**Date**
Ken Louie	Ken Louie Digitally signed by Ken Louie DN: cn=Ken Louie, o=AECOM, ou=MS, email=ken.louie@aecom.com, c=US Date: 2017.05.15 13:28:54 -06'00'		Paul Bell	Paul Bell Digitally signed by Paul Bell Date: 2017.05.15 13:23:25 -06'00'	
Checked by		**Date**	**Approved by (QA)**		**Date**
Darlene Ely	Darlene A. Ely cn=Darlene A. Ely, o=AECOM, ou=MS, email=darlene.ely@aecom.com, c=US 2017.05.15 14:28:41 -06'00'		Dan Priebe	Daniel Priebe Digitally signed by Daniel Priebe Date: 2017.05.15 14:59:29 -06'00'	
Verified by (if required)		**Date**	**Approved by (PEM)**		**Date**

Status	Rev. No.	Date	Prepared By	Pages	Description of Changes
Final	0	5-17-2017	RS	All	Approved for Bid

Safety Related: Yes ☒ No ☐	**Quality Level:** Full QA ☒ Enhanced QA ☐ Commercial QA ☐

TABLE OF CONTENTS

1.0 PART 1 – GENERAL 1

1.1 Section Scope 1
1.2 Related Sections 1
1.3 Codes and Standards 2
1.4 System Description 3
1.5 Submittals 3
1.6 Delivery, Storage, and Handling 5
1.7 Quality Assurance 5
1.8 Site Conditions 8

2.0 PART 2 – PRODUCTS 9

2.1 Manufacturers 9
2.2 Materials 9
2.3 Equipment 9
2.4 Components 13
2.5 Shop Quality Control 19

3.0 Part 3 – EXECUTION 21

3.1 Preparation 21
3.2 Erection, Installation, and Application 21
3.3 Field Quality Control 21
3.4 Adjusting and Cleaning 21
3.5 Demonstration 21
3.6 Protection 21

4.0 LIST OF APPENDICES 22

LIST OF TERMS

Abbreviations and Acronyms

Term	Definition
ABMA	American Bearing Manufacturers Association
AC	Alternating Current
ASME	American Society of Mechanical Engineers
AWG	American Wire Gauge
CFR	Code of Federal Regulations
IEEE	Institute of Electrical and Electronics Engineer
NC	Normally Closed
NO	Normally Open
NEC	National Electrical Code
NEMA	National Electrical Manufacturers Association
NFPA	National Fire Protection Association
ODP	Open-Dipproof
OSHA	Occupational Safety and Health Administration (OSHA)
TEFC	Totally Enclosed Fan Cooled
UL	Underwriters Laboratories
VAC	Volt Alternating Current
WK^2	Load

Units

hp Horsepower

Hz Hertz

kW Kilowatt

Definitions

BUYER – The Company for whom the VENDOR is performing work or services.

COMMERCIAL QUALITY ASSURANCE (CQA) - Level of controls for those items, services, or processes where, based on an evaluation of risk or nuclear safety, no additional quality controls beyond the provider's published or stated attributes of the item, service, or process is required.

DESIGN CHANGE – Within the context of this specification, a DESIGN CHANGE is technically equivalent to a SUBSTITUTION (see SUBSTITUTION). However, the term DESIGN CHANGE may be used to refer to more significant changes to the design compared to a simple substitution.

DEVIATION – Any departure from the requirements contained in the purchase order and specification which VENDOR proposes to incorporate if approved by BUYER.

ENHANCED QUALITY ASSURANCE (EQA) - Level of controls for those items, services, or processes where, based on an evaluation of risk or nuclear safety, additional controls beyond the provider's published or stated attributes of the item, service, or process are needed to verify critical attributes.

FULL QUALITY ASSURANCE (FQA) - Level of controls applied for items services, or processes that are commensurate with the controls invoked under ASME NQA-1 or other appropriate national consensus standard.

HANDLING - The movement or transportation of items following receipt from offsite/ project locations. This includes movement within storage areas and movement/transportation from receipt or storage areas to field locations. Handling requirements include the need for special handling tools and equipment, restrictions on material composition of surfaces in contact with the item, protection against damage or deterioration, which could occur during movement and placement, protection against physical damage due to excessive shock or vibration, and protection against entry of dirt, water, or other contaminants.

HOLD POINT – A mandatory inspection activity beyond which work shall not proceed until (1) the inspection is performed by an independent inspector and/or BUYER and acceptance is authenticated, or (2) a written release is authorized by the organization who established the hold point

MANUFACTURER – The Party responsible for making the product.

MORE CONSERVATIVE – "More conservative" shall be interpreted as "more protective of the health, safety and well-being of Site workers and facilities, the public, and environment, as applicable"

NONCONFORMANCE – a deficiency in characteristic, documentation, or procedure that renders the quality of an item or activity unacceptable or indeterminate

PRESSURE-CONTAINING COMPONENTS – Items that form the pressure-containing envelope of the piping system

PROCUREMENT QUALITY CLAUSES (QA Clauses) – Procurement quality clauses are to be used for the acquisition of items and services. The clauses establish contractual obligations for quality program systems, identification, traceability, documents submittals, testing, reporting, qualification, special process controls, inspections, etc.

PRODUCT DATA – Printed information including, but not limited to, catalog cuts, color charts, illustrations, diagrams, templates, performance curves, brochures, and other forms of Product literature

QUALITY ASSURANCE RECORDS – Quality assurance plans, procedures, and records, including completed documents that furnish evidence of the quality of an item or activities affecting quality

RATED LOAD – Regular or guaranteed operating point at which vendor certifies the equipment performance.

SHALL / MUST – Denotes project requirements, compliance is required

SHIPPING – The movement of items from an off-site/project location (vendor, warehouse, etc.) to an on-site/project location, or movement from an onsite/ project location to an off-site/project location. Shipping requirements include packaging and securing of items to protect against damage or deterioration which could occur during movement and transportation, protection against physical damage due to excessive shock or vibration, protection against entry of dirt, water, or other contaminants, and protection against other environmental conditions such as temperature or humidity.

SHOULD – Denotes recommendation or expectation, compliance is expected

SPECIFICATION – Refers to any design, fabrication or supply specification

STORAGE – Holding of items in areas that address: the probable maximum period to be held, the inherent physical limitations of the item itself, and required protection from potential hazards such as fire, corrosion, chemical attack and environmental conditions. Storage also includes the requirements for maintaining the integrity and operability of items through routine maintenance, cleaning, or other means of preservation.

SUBSTITUTION – Any change or deviation from issued approved drawings, designs, methods, or contract terms and conditions. Changes in products, materials, equipment, methods of construction, and test criteria required by the Contract Documents proposed by the VENDOR after award of the Contract are considered to be requests for substitution.

VENDOR – The Company responsible for the supply of equipment or services

WITNESS POINT – An inspection activity beyond which work shall not proceed until an inspector and/or BUYER is notified and (1) the inspection is performed and released, or (2) the inspection is deferred and can be completed at a later time, or (3) a written waiver is issued by the organization who established the witness point.

1.0 PART 1 – GENERAL

1.1 Section Scope

1.1.1 This Specification outlines the requirements for safety and non-safety related motors furnished with process and non-process driven equipment, and supplements the Induction Motor Data Sheet(s) for the associated driven equipment.

1.1.2 The motors shall be polyphase and single-phase, squirrel-cage induction motors of frame size per NEMA MG1-2014, Part 13. Motors 1/2 hp through 250 hp shall be rated 460 V, three-phase, 60 Hz. Motors less than 1/2 hp shall be rated for use at 115 VAC single phase, 60 Hz service.

1.1.3 This Specification does not apply to motor requirements for submersible sump pump motors and canned pump motors.

1.1.4 Work by VENDOR

1.1.4.1 The VENDOR shall complete items in the Induction Motor Data Sheet(s) pertaining to motor data supplied by VENDOR. The data will be subject to the BUYER's approval.

1.1.4.2 All motors shall be purchased as a part of the driven equipment. Refer to driven equipment requisition package for other requirements to be provided by VENDOR.

1.1.5 Work to be provided by BUYER

1.1.5.1 Unloading, installation, field inspection, and field-testing unless noted otherwise in the inquiry or purchase order.

1.1.5.2 All handling equipment, rigging, tools, and labor required to unload, store, remove from storage, erect, and field-test the specified motors and accessories.

1.1.5.3 Foundations.

1.1.5.4 Conduit and wiring except as specified herein.

1.2 Related Sections

1.2.1 The following related sections contain additional requirements for the Packaged Units:

01 25 00	Substitutions and Design Changes
01 33 00	Submittals
01 40 00	Quality Assurance
01 60 00	Labeling
01 66 00	Delivery, Storage, and Handling
01 81 01	General Services Natural Phenomena Hazard Performance Requirements
01 81 02	Safety Systems and Components Natural Phenomena Hazard Performance Requirements

26 29 33	480V Variable Frequency Drive
01 86 26	Electrical Requirements for Packaged Equipment

1.2.2 Should there be any conflicts/discrepancies amongst these documents; the VENDOR shall request a written resolution from the BUYER or BUYER's representative.

1.3 Codes and Standards

1.3.1 Work shall be performed in accordance with the referenced codes, standards, and documents for this specification.

1.3.2 The following codes and standards, of the exact issue shown, form part of the BUYER basis of design to the extent specified in the applicable sections of this document. In the event of a conflict between documents referenced herein and the requirements of this specification, the requirements of this specification shall take precedence only when this specification's requirements are more stringent or conservative. If a code or standard not listed below is to be applied to the scope (see Section 1.1), apply the latest code or standard as of April 16, 2015.

1.3.2.1 American Bearing Manufacturers Association (ABMA)
- ABMA 9 – 2015, *Load Ratings and Fatigue Life for Ball Bearings*
- ABMA 11 – 2014, *Load Ratings and Fatigue Life for Roller Bearings*

1.3.2.2 American Society of Mechanical Engineers (ASME)
- ASME NQA-1 – 2008 and 2009A, *Quality Assurance Program Requirements for Nuclear Facility Applications*

1.3.2.3 Institute of Electrical and Electronics Engineer (IEEE)
- IEEE 841 – 2009, *Petroleum and Chemical Industry—Premium Efficiency, Severe-Duty, Totally Enclosed Fan-Cooled (TEFC) Squirrel Cage Induction Motors—Up to and Including 370 kW (500 hp)*
- IEEE 323 – 2003 (R 2008), *Qualifying Class 1E Equipment for Nuclear Power Generating Stations*
- IEEE 334 – 2006 (R 2012), *Qualifying Continuous Duty Class 1E Motors for Nuclear Power Generating Stations*
- IEEE 344 – 2013, *Seismic Qualification of Equipment for Nuclear Power Generating Stations*

1.3.2.4 National Electrical Manufacturer Association (NEMA)
- NEMA MG 1 – 2014, *Motors and Generators*
- NEMA MG 2 – 2014, *Safety Standard for Construction and Guide for Selection, Installation and Use of Electric Motors and Generators*

1.3.2.5 National Fire Protection Association (NFPA)
- NFPA 70 – 2014, *National Electrical Code (NEC)*

1.3.2.6 Underwriters Laboratories (UL)
- UL 674 – 2011, 5th Ed., *UL Standard for Safety Electric Motors and Generators for Use in Hazardous (Classified) Locations*

1.3.2.7 Code of Federal Regulations (CFR)

- 29 CFR Part 1910 – 2015, *Occupational Safety and Health Standards*

1.4 System Description

See driven equipment data sheets and/or specifications.

1.5 Submittals

Submittals that are listed within this section shall be prepared and processed in accordance with requirements of CSI Section 01 33 00 "Submittals" and shall include all of the required Quality Assurance documentation in accordance with CSI Section 01 40 00 "Quality Assurance".

1.5.1 All VENDOR RFI's shall be submitted Per CSI Section 01 25 00, "Substitutions and Design Changes".

1.5.2 The following technical documents shall be delivered in timely manner:

1.5.2.1 List of codes and standards used for fabricating and testing the assembly

1.5.2.2 Fabrication/Testing and Inspection Plan (Traveler) in accordance with QA Clause B13 for EQA and FQA level motors.

1.5.3 The following manufacturer's technical product data and relevant information shall be submitted to the BUYER.

1.5.3.1 Induction Motor Data Sheet(s), in accordance with QA Clause B33.

1.5.3.2 Motor performance curves for each motor rated 100 hp and larger:

A. Hot and cold current-time Damage curves
B. Speed-Torque curve at rated voltage and specified minimum starting voltage
C. Speed-Current curve
D. Speed-Power Factor curve
E. Motor starting current-time curve specific to the driven equipment
F. Starting capability and minimum time between starts

1.5.3.3 Dimensional outline drawings of equipment: Identify center of gravity and locate and describe mounting and anchoring provisions. Dimensionally locate all connection points and identify type of connection required. Also indicate weights, loadings and required clearances for component removal.

1.5.3.4 Wiring and Schematic Diagrams: Electrical drawings and diagrams showing all data pertaining to power supply and electrical equipment, including power, signal, and control wiring. Differentiate between manufacturer installed and field installed wiring.

1.5.3.5 Installation, Operations and Maintenance Manuals.

1.5.3.6 Shipping, and handling instructions in accordance with QA Clause B85.

1.5.4 The VENDOR shall prepare a Final Data Package submittal for each item, as listed in this specification. The Final Data Package shall be submitted and approved by the BUYER prior to release for shipment. The package shall include:

1.5.4.1 Certificate of Conformance (CoC) shall be provided in accordance with QA Clause B79.

1.5.4.2 Certified Factory Acceptance Test Reports for tests specified in Section 2.6, in accordance with QA Clause B52.

1.5.4.3 Final Inspection Report which documents the results of the final inspection, in accordance with QA Clause B52.

1.5.4.4 Non Conformance Reports in accordance with QA Clause B22.

1.5.4.5 MANUFACTURER's/VENDOR's product data (i.e., data sheets, material cut sheets, operation & maintenance manuals, etc.), in accordance with QA Clause B33.

1.5.4.6 Request for Information (pertinent to the fabricated assembly).

1.5.4.7 Approved Design Changes - Engineering Change Notices (ECN's) & Design Change Notices (DCN's).

1.5.4.8 Detailed As-Built drawings.

1.5.4.9 Detailed listing of recommended spare parts in accordance with QA Clause B82 for EQA and FQA level motors.

1.5.4.10 Motor assemblies shall be listed by a Nationally Recognized Testing Laboratory (NRTL) and appropriately labeled in accordance with QA Clause B65.

1.5.4.11 Certification against the procurement of potentially suspect or counterfeit items (i.e., all supplied materials shall be genuine, new, and unused), in accordance with QA Clause B76.

1.5.4.12 Dimension Verification Reports (including critical dimensions) in accordance with QA Clause 52 for EQA and FQA level motors.

1.5.4.13 Identification of age control items in accordance with QA Clause B43 for EQA and FQA level motors.

1.5.4.14 All assemblies shall be labeled with a part number/model number, in accordance with QA Clause B32.

1.5.4.15 Calibration certificates for VENDOR owned instruments and measurement equipment used during testing, in accordance with QA Clause B12 for EQA and FQA level motors.

1.5.4.16 Calibration certificates for instrumentation supplied with motor assemblies, in accordance with QA Clause B61.

1.6 Delivery, Storage, and Handling

1.6.1 Refer to CSI Section 01 66 00 "Delivery, Storage and Handling".

1.6.2 In addition, refer to driven equipment data sheets and/or specification for delivery, storage, and handling requirements.

1.7 Quality Assurance

1.7.1 There are multiple quality assurance levels applied within this document. The varying quality levels are identified on the Induction Motor Data Sheet(s).

1.7.1.1 For Commercial Quality Assurance (CQA) level items all requirements addressed within this specification apply, except for items noted for FQA or EQA level items.

1.7.1.2 For Enhanced Quality Assurance (EQA) level items all requirements addressed within this specification apply, except for items noted for only FQA level items.

1.7.1.3 For Full Quality Assurance (FQA) level items, the VENDOR shall meet Nuclear Quality Assurance, NQA-1 quality program requirements included in the driven equipment requisition, and all requirements addressed within this specification apply.

1.7.1.4 The table below summarized the motor quality assurance level. The motor functional requirements are identified in Section 2.4.4. The Quality Level (QL) of each motor is determined by referring to the Induction Motor Data Sheet(s) attached to the driven equipment purchase requisition.

Table 1.7-1: QA Level Summary

Motor Components	Quality Level	Basis	Design Code or Special Quality Level Based Requirements	NPH / Limit State
• Bearings • Shaft • Insulation and windings • Lubricants • Motor lead cables • Seals and gaskets • Space heater • Equipment Mounting	FQA	• 40 year operational life • Seismic condition • Environmental condition • Motor performance	Applicable ASME NQA-1 IEEE 323 IEEE 334 IEEE 344 NEMA MG-1	See Induction Motor Data Sheet(s)
• Bearings • Shaft • Insulation and windings • Lubricants • Motor lead cables • Seals and gaskets • Space heater	EQA	• 40 year operational life • Environmental condition • Seismic condition • Motor performance	IEEE 323 IEEE 334 IEEE 344 NEMA MG-1	See Induction Motor Data Sheet(s)

Motor Components	Quality Level	Basis	Design Code or Special Quality Level Based Requirements	NPH / Limit State
• Equipment mounting				
• Bearings • Shaft • Insulation and windings	CQA	• 40 year operational life • Motor performance	NEMA MG-1	See Induction Motor Data Sheet(s)

NOTE: This table is a summary of equipment quality level definitions and is intended to supplement the quality levels defined on BUYER provided design documents.

1.7.2 Applicable Procurement QA Clauses are summarized in the table below. The full QA Clause definition and associated requirements are located in CSI Section 01 40 00 "Quality Assurance".

Table 1.7-2 Procurement Quality Clauses

Supplier Fabrication
B12 Supplier Use of Calibrated Equipment
B13 Fabrication/Inspection/Test Plan
B16 Source Inspection
B17 Certified Electrical Inspector (Non-NEC IAEI)
B22 Nonconformance Documentation and Reporting
Material Identification
B32 Identification of Items with Part Number/Model Number
B33 Identification of Items with Product Data Sheet
B37 Identification and Traceability of Items
B43 Identification of Age Control Items
Testing and Test Data
B52 Inspection and Test Report
B61 Certification of Calibration
B65 Nationally Recognized Testing Laboratory (NRTL) Listed or Labeled
Inspection and Acceptance Criteria
B70 Supplier Furnished Items
B76 Procurement of Potentially Suspect or Counterfeit Items
B79 Certificate of Conformance

B82 Recommended Spare Parts Listing
Material Handling
B85 Packaging/Shipping Procedures

1.7.3 Inspection Points

1.7.3.1 The following verification points required by this section shall be in accordance with CSI Section 01 40 00 "Quality Assurance" verified by the BUYER, as applicable. At a minimum, the following witness and hold points shall apply:

TABLE 1.7-3 – HOLD AND WITNESS POINT VERIFICATION (EQA and FQA)

Verification Point Description	Type of Verification
Prior to Fabrication	H
Prior to Testing	W
Prior to Inspection	W
Prior to Acceptance Testing	H
Prior to Shipping	H
	(H) Hold, (W) Witness

TABLE 1.7-4 – HOLD AND WITNESS POINT VERIFICATION (CQA)

Verification Point Description	Type of Verification
Prior to Fabrication	H
Prior to Testing	N/A
Prior to Inspection	N/A
Prior to Acceptance Testing	N/A
Prior to Shipping	H
	(H) Hold

1.7.3.2 If the Hold and Witness Point Verification items shown on Table 1.7-3 and Table 1.7-4 above are different from the driven equipment, VENDOR shall notify the BUYER for resolution.

1.7.3.3 The VENDOR shall provide required notifications of verification points in accordance with CSI Section 01 40 00 "Quality Assurance" as applicable, and shall not proceed past required hold points without written authorization from the BUYER Quality Assurance (QA) representative.

1.7.3.4 VENDOR shall allow BUYER or BUYER's representative access to theirs and/or any lower tier supplier's facility and records pertaining to this procurement for the purpose of Quality Assurance Audits and surveillance at mutually agreed times. Source inspections will be performed in accordance with QA Clause B16 for EQA and FQA level motors.

1.7.3.5 All materials, components, and assemblies shall be identifiable and traceable in accordance with QA Clause B37 for EQA and FQA level motors.

1.7.3.6 VENDOR personnel performing electrical inspection/test shall be certified in accordance with the requirements specified in NQA-1, in accordance with QA Clause B17 for FQA level motors.

1.7.3.7 VENDOR shall obtain the items directly from the original manufacturer and shall provide evidence in accordance with QA Clause B70 for FQA level motors.

1.8 Site Conditions

1.8.1 Refer to Induction Motor Data Sheet(s) for site condition requirements.

1.8.2 Refer to Induction Motor Data Sheet(s) for seismic qualification requirements.

2.0 PART 2 – PRODUCTS

2.1 Manufacturers

2.1.1 To be selected by driven equipment VENDOR, unless otherwise specified on Induction Motor Data Sheet(s).

2.2 Materials

Not Used.

2.3 Equipment

2.3.1 General

2.3.1.1 Each motor furnished shall be a complete assembly. Installation of the motor shall require only setting in place, coupling to the driven equipment, and making power and auxiliary device cable connections.

2.3.1.2 When motors are factory assembled and coupled to the driven equipment, installation of each unit assembly shall require only setting in place per MANUFACTURER's recommendations and making power and auxiliary device cable connections.

2.3.1.3 All motors shall be listed by a Nationally Recognized Testing Laboratory (NRTL) and appropriately labeled in accordance with QA Clause B65 requirements.

2.3.2 Motors shall operate successfully at the design load horsepower of driven equipment with the maximum design ambient temperatures and altitude specified at Induction Motor Data Sheet(s).

2.3.3 Horsepower

2.3.3.1 Nameplate continuous horsepower rating shall be a minimum of 10% greater than the maximum brake horsepower required by the driven equipment when the driven equipment is operating as specified under the most severe conditions likely to be encountered.

2.3.3.2 Service factor ratings higher than 1.0 shall not be used to meet the above requirements unless allowed by the Induction Motor Data Sheet(s). All motors shall have service factor in accordance with NEMA MG 1, Part 12.51 unless indicated otherwise on the Induction Motor Data Sheet(s).

2.3.4 Torque and WK^2

2.3.4.1 All motors shall have characteristics suitable for the torque and WK^2 characteristics of the driven equipment when the driven equipment is operating as specified on the Induction Motor Data Sheet(s).

2.3.4.2 Unless specified otherwise or if other design is required by the driven equipment load characteristics, motors shall have a torque characteristic similar to either NEMA Design B or NEMA Design C, and in accordance with NEMA MG 1, Part 12. Other torque characteristics for special applications shall be approved by the BUYER.

2.3.4.3 Except as specified otherwise, the torque characteristics of all induction motors, from 90 to 110 percent of rated voltage, shall accelerate the inertia loads of the motor and driven equipment to full speed without damage to the motor or the equipment.

2.3.5 Temperature Rise

2.3.5.1 Motor temperature rise for any class of insulation shall not exceed that specified in NEMA MG 1, Part 12.

2.3.5.2 If the service conditions as specified on the Induction Motor Data Sheet(s) are not standard in accordance with NEMA MG 1, Part 12 (40 degrees C ambient temperature and not over 3300 feet elevation) the temperature rise of motors having Class B insulation shall be adjusted in accordance with NEMA MG 1-Part 12 requirements.

2.3.6 Voltage and Frequency

2.3.6.1 Motors shall be rated for the voltage and frequency specified in the Induction Motor Data Sheet(s). Permissible voltage and frequency variations shall be in accordance with NEMA MG 1, Part 12.

2.3.6.2 Motors shall be capable of operating at rated load for a minimum of 60 seconds when 75 percent of rated voltage at rated frequency is applied to the motor terminals.

2.3.7 Starting

2.3.7.1 Unless specified otherwise on the Induction Motor Data Sheet(s), motors shall be designed for full voltage starting. Full voltage starting equipment will be furnished by others, unless specified otherwise on the Induction Motor Data Sheet(s). See Section 2.3.9 of this specification for Inverter Duty Motor requirements.

2.3.7.2 If variable speed or torque control is required, the driven equipment manufacturer may be required to furnish, or specify suitable starting and control equipment in accordance with this specification, supplements, and Induction Motor Data Sheet(s).

2.3.7.3 Motor starters and control equipment, if supplied, shall be suitable for the type of service. All starting equipment shall be fully described in the VENDOR's proposal, complete with manufacturer's catalog data and descriptive bulletins.

2.3.7.4 Motor starting current (locked rotor current) shall be in accordance with NEMA MG 1, Part 12.35. Motors shall be capable of withstanding the number of starts normally imposed by the driven equipment without appreciable loss of service life.

2.3.7.5 Motors shall be capable of starting and accelerating their driven equipment to full speed at a starting voltage as required by the induction motor and driven equipment data sheets.

2.3.8 Premium Efficiency Motors

2.3.8.1 When premium efficiency motors are specified on the Induction Motor Data Sheet(s), motor efficiency shall equal or exceed the values listed in NEMA MG 1, Table 12-12. The nominal efficiency shall be stamped on the nameplate.

2.3.9 Inverter Duty Motors

2.3.9.1 This section applies to motors specified to meet NEMA MG 1, Part 31 and to be controlled by a variable frequency drive (in addition, inverter duty motors shall comply with the foregoing requirements).

2.3.9.2 Inverter duty motors shall meet the requirements of NEMA MG 1, Part 31.

2.3.9.3 Inverter duty motors shall provide:

A. A constant torque for the speed range specified in the data sheets, i.e. 5:1, 20:1, etc.
B. A variable torque for the speed range specified in the data sheets, i.e. 5:1, 10:1, etc.

2.3.9.4 Motors shall have a 1.15 service factor on sine wave power, and permitted to have a 1.0 service factor on inverter power.

2.3.9.5 Inverter duty motors shall be designed with the manufacturer's version of an "inverter grade" type insulation system. The insulation shall incorporate such features as a double dip and bake treatment for sealing windings and protection from coil-to-coil shorts, extra end turn bracing for coil rigidity, additional phase paper to protect against phase to phase arcing, and magnet wire for resistance to voltage spikes. The motor and insulation system shall have a high enough thermal margin to operate under the load, torque, and speed ranges specified and be able to withstand peak transients of 3.1 times rated voltage.

2.3.9.6 The maximum temperature rise of the windings, above the temperature of the cooling medium, shall not exceed the values given for relative equivalent temperature rise in NEMA MG1, Table 31-2.

2.3.9.7 The inverter duty motors shall be designed to perform for scalar Volts/Hertz control, sensorless vector control, or closed loop vector control with encoder.

2.3.9.8 Inverter duty motors shall be designed such that they do not require any lead length limitations from the inverter controller in order to meet performance and warranty requirements.

2.3.9.9 Inverter duty motors shall be provided with shaft grounding for bearing protection from harmful VFD-induced shaft currents.

2.3.9.10 It is preferred that inverter duty motors meet the performance requirements noted on the VFD Data Sheets without the use of a separate external fan/blower. The manufacturer shall state whether this is necessary or not at the proposal stage.

2.3.9.11 Inverter duty motors shall have overload protection via normally closed thermostats, one per phase. If the motor is to be located in a hazardous area, the thermostat shall meet the requirements of the classified area.

2.3.9.12 If the motor is to be located in a hazardous area, the VENDOR shall identify at the proposal stage how the safety considerations identified in NEMA MG 1, Part 31.1.4, will be addressed to ensure safe operation of equipment proposed.

2.3.10 Severe Duty Motors

2.3.10.1 Enclosures shall be TEFC with all cast iron features including frame, end shield, fan covers, mountings, and conduit boxes that meet the test requirements of IEEE 841, Section 7, "Frame Paint Corrosion Resistance".

2.3.10.2 A non-sparking, non-corrosive bearing isolator "Inpro/Seal®" by the Inpro Companies, Inc. shall be installed on the drive end of the motor shaft to protect against moisture and dirt.

2.3.10.3 Stator and rotor air-gap surfaces shall have a corrosion and moisture resistant coating.

2.3.10.4 Assembly hardware, including frame and conduit box bolts, grease fittings or plugs, drain fittings or plugs, fan clamp and bolt, name plate fasteners, etc. shall be zinc plated corrosion resistant and meet the test requirements of IEEE 841, Section 7.4, "Miscellaneous Parts Corrosion Resistance". If specified in the data sheets, stainless steel assembly hardware shall be provided.

2.3.10.5 Shaft runout tolerances for NEMA "T" and "TS" shaft extensions shall be:

A. For 0.1875" to 1.625" diameter shafts, 0.001 in total indicator reading.
B. For 1.625" to 6.500" diameter shafts, 0.0015 in total indicator reading for ball bearings and 0.002 for roller bearings.

2.3.10.6 Motor external surface paint system shall pass the corrosion resistance 96 hour test of IEEE 841 A.2.

2.3.11 Explosion Proof Motors

2.3.11.1 Explosion-proof motors shall meet the requirements of UL 674, and shall be suitable and UL approved for the Hazardous Area Class, Division, and Group Designations as indicated on the Induction Motor Data Sheet(s). Other special considerations will be specified in the Induction Motor Data Sheet(s).

2.3.11.2 Drains and breathers shall be UL listed for the hazardous area the motor will be used in.

2.3.12 Vibration

The motors shall operate without exceeding the applicable vibration allowances provided by NEMA MG 1, Part 7.

2.3.13 Noise

2.3.13.1 Motors shall operate with an equivalent A-weighted sound level not to exceed the table in NEMA MG 1, Tables 9-1 and 9-2, unless otherwise approved.

2.3.13.2 The motor sound level shall be selected by the VENDOR to conform to the overall motor/driven equipment assembly sound level requirements specified of OSHA 29 CFR 1910.

2.3.13.3 In addition to the above requirements, the sound level of the overall motor/driven equipment assembly shall not exceed the levels identified in the driven equipment specification of which this specification is a part.

2.3.14 Loss Evaluation

VENDORS are encouraged to offer premium efficiency motors since total motor full load losses will be evaluated on all integral horsepower motors.

2.4 Components

2.4.1 For FQA level motors, the motor and its components shall be qualified to perform its functional requirements during or after a seismic event, through the design life of the plant, and in environmental conditions. Motors shall meet the requirements and qualifications, in accordance with ASME NQA-1, IEEE 323, IEEE 334, IEEE 344, and NEMA MG1 standards.

2.4.2 For EQA level motors, the motor and its components shall be qualified to perform its functional requirements during or after a seismic event, through the design life of the plant, and in environmental conditions. Motors shall meet the requirements and qualifications, in accordance with IEEE 323, IEEE 334, IEEE 344, and NEMA MG1 standards.

2.4.3 For CQA level motors, the motor and its components shall be able to perform through the design life of the plant. Motors shall meet the requirements of NEMA MG 1 standard.

2.4.4 Functional Requirements

2.4.4.1 Design Life

A. All motors shall be designed to last 40 operating years in the environment operating conditions described by this specification and referenced documents.

B. VENDOR to define how the 40-year design life will be achieved (e.g., by identifying removable/spare parts, etc.)
C. Any maintenance activities required to achieve a 40-year design life shall be described in details in the VENDOR provided operation/maintenance manual(s).

2.4.4.2 Seismic Condition

A. For CQA level motors, it is not a design requirement for the motors to be operational following a seismic event. The required anchorage shall be provided per CSI Section 01 81 01 "General Service Natural Phenomena Hazard Performance Requirements."
B. For EQA and FQA level motors, the motors shall be design to operate during and after the seismic event. Seismic qualification of equipment by testing shall be in accordance to IEEE 344. The required anchorage shall be provided per CSI Section 01 81 02 "Safety Systems and Components Natural Phenomena Hazard Performance Requirements."

2.4.4.3 Environmental Condition

A. For FQA level motors, the outdoor motors shall be design to operate when exposed to harsh environmental condition such as volcanic ash. Qualification requirements shall be in accordance with IEEE 323 and 334.
B. For CQA and EQA level motors, it is not a design requirement for the motors to be operational when exposed to harsh environmental condition such as volcanic ash.

2.4.4.4 Motor Performance

A. All motors shall demonstrate its capability to start, accelerate to operating speed, and operate all specified combinations of driven equipment load and speed variations and environmental conditions. EQA and FQA level motors performance qualifications shall be in accordance with NEMA MG 1, IEEE 323 and 334.
B. For CQA level motors, NEMA MG 1 requirements shall be followed.

2.4.5 Enclosure Requirements

2.4.5.1 General

A. The types of enclosures required for the motors shall be as specified on the Induction Motor Data Sheet(s).
B. Motors that are subject to high humidity, basic or acidic vapor and designated as "Mill and Chemical Resistant" on the Induction Motor Data Sheet(s) shall have epoxy-encapsulated windings, stainless steel hardware, running shaft seals, and cast iron terminal boxes.
C. Motors for outdoor service shall have all exposed metal surfaces protected with a corrosion-resistant polyester paint or coating.
D. Lifting eye bolts or cast hooks shall be furnished with frames 182T and larger, and for vertical or horizontal oriented motors. Eye bolts shall be located at the

balance point and drilled or tapped holes in the enclosure case shall be dead ended or permanently sealed against water entry.

E. The motor frame (base, not the housing of the motor) or end shield shall be furnished with a drilled and tapped hole 5/16 inch diameter minimum for equipment grounding purposes.

F. For motors smaller than frame size 182T, the end bells shall be made of cast iron with the remaining enclosure parts being made of iron or steel with a minimum thickness of 1/8 inch (3.2 mm).

G. For motors with frame size 182T and larger, all enclosure parts shall be of cast iron.

H. Corrosion resistant material or material that is plated or treated with corrosion resisting material shall be used on all motor fasteners.

I. Inner bearing caps for ball or roller antifriction bearings shall be made of cast iron.

J. Motors 40 hp and above shall be provided with additional ground lug in the motor frame.

2.4.5.2 Open - Dripproof (ODP)

A. Drip proof motors shall have a cast iron frame with integral cast base, cast iron end plates, cast iron conduit box rotatable through 90 degree increments.

B. Enclosure shall meet the NEMA "guarded" definition with screens not interfering with the motor's temperature ratings to protect against incidental contact and rodents.

2.4.5.3 Totally Enclosed Fan Cooled (TEFC)

A. In addition to the preceding requirements for outdoor service motors, totally enclosed motors with NEMA waterproof features shall have enclosure interior surfaces and the stator and rotor air gap surfaces protected with corrosion-resistant alkyd enamel or with polyester or epoxy paint or coating. Bolts, nuts, screws, and other hardware items shall be corrosion-resistant or heavy cadmium plated metal. A rotating labyrinth shaft seal shall be furnished on the shaft extension end of the motor.

B. The fan cover and any portion of the sheet metal enclosure that form air passages over the motor enclosure shall be made from 1/8 inch (3.2 mm) minimum thick iron, mild steel or stainless steel. The fan air intake opening shall be covered by a grille made of cast or formed metal or by a metal screen made of corrosion resisting material.

C. External shaft mounted fan shall be integral to the motor and be suitable for rotation in either direction. Fan shall be made from non-sparking, non-corrosion material such as aluminum alloy containing not more than 0.2 percent copper, plastic, fiberglass or other nonmetallic material.

D. Stainless steel breather/drain(s) shall be furnished at the lowest point(s) of the motor enclosure which shall act as a one-way device allowing drainage of moisture due to condensation while preventing the entrance of contaminants. Drain holes shall be provided with Crouse-Hinds Type ECD "Universal" combination water drain-breather plugs or BUYER approved equal.

E. Totally enclosed motors shall be furnished with rotating shaft seals.

2.4.6 Insulation and Windings

2.4.6.1 All motors shall have Class B or higher insulation as defined by NEMA MG 1. The full load temperature rise shall not exceed that for Class B insulation.

2.4.6.2 Motors that may be subject to water spray, heavy condensation or located in harsh environment shall have moisture resistant, epoxy encapsulated or sealed winding insulation, when specified in the Induction Motor Data Sheet(s). Motors with this type of insulation shall conform to the requirements of Section 1.27 of the NEMA MG 1.

2.4.6.3 All motor windings shall be copper.

2.4.7 Bearings

2.4.7.1 General

A. Antifriction bearings shall meet the requirements of ABMA 9 for ball bearings or ABMA 11 for roller bearings.
B. All motors with antifriction bearings shall be furnished with grease fittings for bearing lubrication and drain plugs for draining excess grease. Grease lubricated bearings shall be self-lubricating and regreaseable. Fractional horsepower motors may be furnished with prelubricated sealed ball bearings.
C. Motors shall be furnished with special bearing seals to prevent leakage of lubricant or entrance of foreign matter along the shaft or through the bearings
D. The type of bearing lubricant shall be selected according to the environmental conditions shown on the Induction Motor Data Sheet(s); bearing lubricants shall contain a corrosion inhibitor. The VENDOR shall furnish all lubrication information required to assure proper equipment startup and subsequent bearing maintenance.
E. Motors furnished with spherical roller thrust bearings shall also be furnished with deep groove radial guide bearings. One guide bearing shall be locked to the shaft so that the guide bearing will take upward thrust and to assure that the thrust bearing is always loaded. If spring loading is furnished, the guide bearing shall not be preloaded during normal operation.
F. Bearings and bearing housings shall be designed to permit disassembly in the field for inspection of the bearings or removal of the rotor.

2.4.7.2 Horizontal Motor Bearings

A. All horizontal motors shall be furnished with either antifriction or sleeve bearings in accordance with the manufacturer's standard practice for the particular frame size and application.
B. Antifriction bearings in direct-coupled motors shall have a minimum L-10 rating life of not less than 60,000 hours and a median life (L-50) of 300,000 hours as rated by ABMA system.

C. Antifriction bearings in belt or chain drive motors will be evaluated based on ABMA L-10 rating life not less than 42,000 hours or as stated on the Induction Motor Data Sheet(s).
D. Split-sleeve bearings shall be furnished instead of antifriction bearings when stated on the Induction Motor Data Sheet(s). Sleeve bearings shall be split, oil ring-lubricated, with split end bells and bearing housings. Motors with oil ring-lubricated bearings shall have a glass-sight oil-level gauge for instant visual checking of oil level marked to indicate normal oil level. If available, motors with oil ring-lubricated bearings shall have a transparent window for oil ring inspection. The oil ring shall be one-piece construction; split type will not be acceptable. Stationary labyrinth seals shall be bronze material.
E. Sleeve bearings on horizontal motors shall be designed and located centrally, with respect to the running magnetic center, to prevent the rotor axial thrust from being continuously applied against either end of the bearings. The motors shall be capable of withstanding without damage to the axial thrusts that are developed when the motor is energized.
F. Air gap measurement holes or other acceptable means will be provided in each motor end enclosure for checking air gap of sleeve bearing motor.

2.4.7.3 Vertical Motor Bearings

A. All vertical motors shall be furnished with antifriction thrust bearings. Bearings shall be of a grade that will provide a minimum L-10 rating life of 35,000 hours and a median life (L-50) of 175,000 hours as rated by ABMA system.
B. Thrust bearings for vertical motors shall be capable of operating for extended periods of time at any of the thrust loadings imposed by the specific piece of driven equipment during starting and normal operation without damage to the bearing, the motor frame, or other motor parts.
C. Thrust bearings and/or guide bearings in vertical motors may be oil lubricated, if required. Sight-glass oil gauges marked to indicate normal oil level shall be furnished.
D. The oil reservoir shall be deep enough to act as a settling chamber. The drain plug shall be accessible from outside the motor.

2.4.8 Terminal Boxes

2.4.8.1 In general, motor lead terminal boxes shall be oversized and at least one size larger than that specified in NEMA MG 1, Part 4.19.

2.4.8.2 All terminal boxes shall have a bolt-type copper ground connector, brazed, and welded, or bolted to the motor frame inside the box. Sizes as shown on table below:

Table 2.4-1: Ground Connector Sizing

Motor Horsepower	Size, AWG
0 thru 10	12
15 thru 20	10
25 thru 50	8
60 thru 75	6
100 thru 250	2

2.4.8.3 Separate terminal boxes or approved condulets or fittings shall be furnished for terminating all heater, thermocouple, thermostat, etc., wiring unless otherwise approved by the BUYER. When space allows, wiring shall be terminated with ring-type connectors on washer-head screw terminal blocks.

2.4.8.4 Where possible, the terminal boxes shall be designed for installation in any position in 90-degree steps from the bottom entry vertical position and shall have a threaded opening to provide watertight rigid connection with the conduit. Non-conducting motor lead positioners and gaskets shall be furnished between the housing and the motor frame.

2.4.8.5 Terminal housings for totally enclosed motors shall be cast iron. Terminal housings for all other motors shall be cast iron, pressed steel, or fabricated steel.

2.4.8.6 All leads shall be wired into the motor terminal housings. All leads and their terminals shall be permanently marked in accordance with the requirements of NEMA MG 1, Part 2.

2.4.9 Accessories

2.4.9.1 Motors shall be furnished with space heaters as specified on the Induction Motor Data Sheet(s).

2.4.9.2 Space heaters shall be of sufficient capacity to keep the motor windings and internal parts dry when the motors are not operating. Space heaters shall not cause winding temperature to exceed rated limiting values nor cause thermal protective device "over temperature" indication when motor is not energized. Heaters shall be made from chrome steel or other noncorrosive material.

2.4.9.3 When a motor is located in classified area, as indicated on the Induction Motor Data Sheet(s), surface temperature of its space heater at rated voltage shall conform to maximum permitted by area classification as defined by NFPA 70 NEC Article 500.8.

2.4.9.4 All space heaters shall be designed for operation on 120 volts single phase.

2.4.9.5 Motors specified on the Induction Motor Data Sheet(s) for outdoor installation shall be conditioned for outdoor use with special attention to corrosion-resisting finish of the metal parts and special bearing seals.

2.4.9.6 When required by the Induction Motor Data Sheet(s), soleplates or baseplates shall be furnished with the motors.

2.4.9.7 Vertical motors with enclosed housings shall have drip shields over the air circulation fan.

2.4.9.8 The bottom ventilating opening provided in the enclosure of vertical motors shall be guarded by baffles or by location to prevent the direct entrance of liquids that might be released by a pump seal failure.

2.4.10 Identification and Markings

2.4.10.1 All electrical motors and components labels shall be provided and affixed in accordance with CSI Section 01 60 00, Labeling.

2.4.10.2 Nameplate data shall be furnished in accordance with NEMA Standard MG 1, Part 10.39 and 10.40. In addition, the temperature rise by resistance at service conditions and the service conditions (ambient temperature and elevation) shall be shown on the nameplate. If the standard conditions horsepower rating has been derated, the nameplate shall list both the standard horsepower and the derated horsepower. Nameplates shall include starting limitations, if any. Nameplates shall also have the NEMA efficiency rating stamped on it.

2.4.10.3 UL hazardous location motors shall be labelled indicating the Class, Division, and Group the motor is intended for, as well as the maximum Operating Temperature Code of the motor's external surface, as indicated in Induction Motor Data Sheet(s).

2.4.10.4 Motors requiring connection of internal thermostats to limit the surface temperature to that indicated by the marked Operating Temperature Code should have an additional Connection Diagram Label.

2.4.10.5 Direction of rotation shall be permanently marked on the motor if the motor is suitable for only one direction of rotation.

2.4.10.6 All motor nameplates and attachment pins shall be corrosion-resistant metal.

2.4.10.7 ABMA bearing identification number for motors furnished with rolling element bearings.

2.4.11 Painting and Finishing

All motors shall be prime-coated and finish coated in accordance with manufacturer's standards.

2.5 Shop Quality Control

2.5.1 The quality control requirements listed in this section are in addition to the Quality Assurance Program Requirements specified in section 1.7 of this specification.

2.5.2 Motors with EQA and FQA level shall be subjected to seismic test in accordance with IEEE 344.

2.5.3 Motors with EQA and FQA level shall be subjected to type test in accordance with IEEE 323 and 334.

2.5.4 All motors shall be subjected to routine tests per NEMA MG 1, Part 12. VENDOR shall forward certified copies of these tests to the BUYER in accordance with QA Clause B52. As a minimum, these tests shall include:

2.5.4.1 Determination of locked-rotor current

2.5.4.2 Measurement of no-load current, speed

2.5.4.3 Measurement of winding resistance

2.5.4.4 High-potential test

2.5.5 Motor vibration measured on any NEMA size motor shall stay within the limits outlined in NEMA MG 1, Part 7. Motors found to vibrate excessively in the field shall be replaced by the VENDOR free of charge.

3.0 PART 3 – EXECUTION

3.1 Preparation

Not Used.

3.2 Erection, Installation, and Application

Not Used.

3.3 Field Quality Control

Not Used.

3.4 Adjusting and Cleaning

Not Used.

3.5 Demonstration

Not Used.

3.6 Protection

Not Used.

4.0 LIST OF APPENDICES

Not Used.

SPECIFICATION

17-2-005

UNINTERRUPTABLE POWER SUPPLY SYSTEMS

AECOM ATKINS AREVA

LOW ACTIVITY WASTE PRETREATMENT SYSTEM

Project No. 31269 (T5L01)

Document No. 17-2-005

CSI Section 26 33 53

Safety Related ☐ Non-Safety Related ☒

UNINTERRUPTIBLE POWER SUPPLY SYSTEMS

228LP-SEB-EDS-UPS-400

251LP-EEC-EDS-UPS-100

Prepared for

Washington River Protection Solutions, LLC

Revision: 0 Status: Final

LINDA MARIE COLLIER
STATE OF WASHINGTON
54652
REGISTERED
PROFESSIONAL ENGINEER

5/15/2017

For Permitting

AECOM ATKINS AREVA

Project Number: 31269 (T5L01)
Doc. No.: 17-2-005
Date: May 17, 2017
Revision: 0

REVISION PAGE

Project Name:	LAWPS	**Discipline:**	Electrical
Client:	Washington River Protection Solutions	**Project Number:** 31269 (T5L01)	
		Latest Revision:	0

REVISION SIGNATURES

C. Salas Carmela Salas	Digitally signed by Carmela Salas DN: cn=Carmela Salas, o=AECOM, ou=US email=carmela.salas@aecom.com, c=US Date: 2017.05.15 11:07:20-04'00'	L. Collier Linda Collier	Linda Collier 2017.05.15 16:24:25 -06'00'
Prepared by	**Date**	**Approved by (SDE/Lead)**	**Date**
K. Louie Ken Louie	Digitally signed by Ken Louie DN: cn=Ken Louie, o=AECOM, ou=MS, email=ken.louie@aecom.com, c=US Date: 2017.05.15 13:15:16 -06'00'	P. Bell Paul Bell	Digitally signed by Paul Bell Date: 2017.05.15 15:42:07 -06'00'
Checked by	**Date**	**Approved by (QA)**	**Date**
N/A		D. Priebe Daniel Priebe	Digitally signed by Daniel Priebe Date: 2017.05.16 11:17:38 -06'00'
Verified by (if required)	**Date**	**Approved by (PEM)**	**Date**

Status	Rev. No.	Date	Prepared By	Pages	Description of Changes
Final	0	5/17/2017	CS	All	Approved for Bid

Safety Related: Yes ☐ No ☒	**Quality Level:** Full QA ☐ Enhanced QA ☒ Commercial QA ☐ TBD ☐

TABLE OF CONTENTS

1.0 PART 1 – GENERAL 1

1.1 Section Scope 1
1.2 Related Sections 1
1.3 Codes and Standards 1
1.4 System Description 3
1.5 Submittals 3
1.6 Delivery, Storage, and Handling 6
1.7 Quality Assurance 6
1.8 Site Conditions 9

2.0 PART 2 – PRODUCTS 10

2.1 Manufacturers 10
2.2 Materials 10
2.3 Equipment 10
2.4 Components 13
2.5 Fabrication 19
2.6 Shop Quality Control 19

3.0 PART 3 – EXECUTION 21

3.1 Preparation 21
3.2 Erection, Installation and Application 21
3.3 Field Quality Control 21
3.4 Adjusting and Cleaning 21
3.5 Demonstration 21
3.6 Protection 21

4.0 List of Appendices 22

Appendix A – Supporting Documents Issued with this Specification 22

LIST OF TERMS

Abbreviations and Acronyms

Term	Definition
AC	Alternating Current
ASME	American Society of Mechanical Engineers
CFR	Code of Federal Regulations
CoC	Certificate of Conformance
CMTR	Certified Materials Test Report
CQA	Commercial Quality Assurance
DC	Direct Current
DCN	Design Change Notice
ECN	Engineering Change Notice
EEC	Electrical Equipment Center
EMI	Electromagnetic Interference
EQA	Enhanced Quality Assurance
FAT	Factory Acceptance Test
FCC	Federal Communications Commission
FQA	Full Quality Assurance
HTTP	Hypertext Transfer Protocol
ID	Identification
IEEE	Institute of Electrical and Electronics Engineers
ISO	International Standard Organization
LAWPS	Low Activity Waste Pretreatment System
LED	Light Emitting Diode
NCR	Nonconformance Report
NEMA	National Electrical Manufacturers Association
NFPA	National Fire Protection Association
NPH	Natural Phenomena Hazard
NRTL	Nationally Recognized Testing Laboratory
PCS	Process Control System
PSSH	Packaging, Storage, Shipping and Handling
PWM	Pulse Width Modulation
RFI	Request for Information
RMS	Root Mean Square
SEB	Safety Equipment Building
SCR	Silicon Controlled Rectifier
SIS	Safety Instrumented System
TBD	To Be Determined

Term	Definition
TCP	Transmission Control Protocol
TBV	To Be Verified
THD	Total Harmonic Distortion
UL	Underwriters Laboratories, Inc
UPS	Uninterruptible Power Supply
USB	Universal Serial Bus
VRLA	Valve Regulated Lead Acid

Units

dBA – A-Weighted Decibels

ft - Feet

Hz – Hertz

kVA – Kilovolt-Amperes

V - Volts

VAC – Volts Alternating Current

°F – Degrees Fahrenheit

°C – Degrees Celsius

Definitions

BYPASS SUPPLY – The alternative mains supply to provide a standby source to the load in the event that the inverter is unavailable.

BUYER – The company for whom the VENDOR is performing work or services.

COMMERCIAL QUALITY ASSURANCE (CQA) – Level of controls for those items, services, or processes where, based on an evaluation of risk or nuclear safety, no additional quality controls beyond the provider's published or stated attributes of the item, service, or process is required.

CREST FACTOR – The ratio of the peak value to the r.m.s. value of the total periodic waveform.

DESIGN CHANGE – Within the context of this specification, a DESIGN CHANGE is technically equivalent to a SUBSTITUTION (see SUBSTITUTION). However, the term DESIGN CHANGE may be used to refer to more significant changes to the design compared to a simple substitution.

DEVIATION – Any departure from the requirements contained in the purchase order and specification which VENDOR proposes to incorporate if approved by BUYER.

ENHANCED QUALITY ASSURANCE (EQA) – Level of controls for those items, services, or processes where, based on an evaluation of risk or nuclear safety, additional controls beyond the provider's published or stated attributes of the item, service, or process are needed to verify critical attributes.

FULL QUALITY ASSURANCE (FQA) – Level of controls applied for items services, or processes that are commensurate with the controls invoked under ASME NQA-1 or other appropriate national consensus standard.

HANDLING – The movement or transportation of items following receipt from offsite/ project locations. This includes movement within storage areas and movement/transportation from receipt or storage areas to field locations. Handling requirements include the need for special handling tools and equipment, restrictions on material composition of surfaces in contact with the item, protection against damage or deterioration, which could occur during movement and placement, protection against physical damage due to excessive shock or vibration, and protection against entry of dirt, water, or other contaminants.

HOLD POINT – A mandatory inspection activity beyond which work shall not proceed until (1) the inspection is performed by an independent inspector and/or BUYER and acceptance is authenticated, or (2) a written release is authorized by the organization who established the hold point.

MAINTENANCE BYPASS SWITCH – A manually operated "make-before-break" switch included with the UPS system in a separate enclosure to provide a supply to the load in such a way that the main components of the UPS unit become isolated and voltage free.

MANUFACTURER – The party responsible for making the product.

MORE CONSERVATIVE – "More conservative" shall be interpreted as "more protective of the health, safety and well-being of site workers and facilities, the public, and environment, as applicable."

NONCONFORMANCE – A deficiency in characteristic, documentation, or procedure that renders the quality of an item or activity unacceptable or indeterminate.

PROCUREMENT QUALITY CLAUSES (QA CLAUSES) – Procurement quality clauses are to be used for the acquisition of items and services. The clauses establish contractual obligations for quality program systems, identification, traceability, document submittals, testing, reporting, qualification, special process controls, inspections, etc.

PRODUCT DATA – Printed information including, but not limited to, catalog cuts, color charts, illustrations, diagrams, templates, performance curves, brochures, and other forms of Product literature.

QUALITY ASSURANCE RECORDS – Quality assurance plans, procedures, and records, including completed documents that furnish evidence of the quality of an item or activities affecting quality.

SHALL / MUST – Denotes project requirements, compliance is required

SHIPPING – The movement of items from an off-site/project location (vendor, warehouse, etc.) to an on-site/project location, or movement from an onsite/ project location to an off-site/project location. Shipping requirements include packaging and securing of items to protect against damage or deterioration which could occur during movement and transportation, protection against physical damage due to excessive shock or vibration, protection against entry of dirt, water, or other contaminants, and protection against other environmental conditions such as temperature or humidity.

SHOULD – Denotes recommendation or expectation, compliance is expected.

SPECIFICATION – Refers to any design, fabrication or supply specification.

STORAGE – Holding of items in areas that address: the probable maximum period to be held, the inherent physical limitations of the item itself, and required protection from potential hazards such as fire, corrosion, chemical attack and environmental conditions. Storage also includes the requirements for maintaining the integrity and operability of items through routine maintenance, cleaning, or other means of preservation.

SUBSTITUTION – Any change or deviation from issued approved drawings, designs, methods, or contract terms and conditions. Changes in products, materials, equipment, methods of construction, and test criteria required by the Contract Documents proposed by the VENDOR after award of the Contract are considered to be requests for substitution.

UNINTERRUPTIBLE POWER SUPPLY – Unit consisting of a rectifier, battery and inverter string with a static switch connected to a bypass input power supply.

VENDOR – The Company responsible for the supply of equipment or services.

VENTED, FLOODED, BATTERIES – Battery cells incorporating liquid electrolyte in an enclosed container having one or more vents through which gaseous products may freely pass, and which can accept high rate charging following a discharge (can be lead acid or NiCd).

VALVE REGULATED LEAD ACID BATTERIES – Battery cells in containers which are sealed under normal conditions, and in which the electrolyte is absorbed in plate separator material such that oxygen evolved from the positive plates transfers to the negative plates and `recombines' to form water. The containers incorporate a pressure relief device to permit the escape of gas if the internal pressure exceeds a certain value.

WITNESS POINT – An inspection activity beyond which work shall not proceed until an inspector and/or BUYER is notified and (1) the inspection is performed and released, or (2) the inspection is deferred and can be completed at a later time, or (3) a written waiver is issued by the organization who established the witness point.

1.0 PART 1 – GENERAL

1.1 Section Scope

1.1.1 This specification covers the engineering, design, fabrication, inspection and testing of Uninterruptible Power Supply (UPS) systems designed to provide continuous power for the Safety Instrumented System (SIS), Process Control System (PCS) and controls, and miscellaneous low voltage loads that require continuous power.

1.1.2 The scope includes the provision of two complete packaged UPS systems. One system shall be supplied for the SIS equipment, and the second system for the PCS equipment. Each system is intended to be self-contained, consisting of:

A. Molded-case input circuit breaker
B. AC/DC Rectifier-charger
C. DC/AC Inverter
D. Static transfer switch
E. Batteries, complete with racks, disconnect switch, and intercell connections
F. Battery monitoring system
G. Maintenance Bypass Switch
H. Power Connections
I. Surge suppression
J. Panel accessories including control, meters, lights, indicators, alarms, and overload protection.

1.1.3 Installation requirements are excluded from the scope of this specification and are to be determined by the BUYER's procurement strategy of the UPS systems.

1.2 Related Sections

01 25 00	Substitutions and Design Changes Specification
01 33 00	Submittals
01 40 00	Quality Assurance
01 60 00	Labeling Specification
01 66 00	Delivery Storage and Handling Specification
01 81 01	General Services Natural Phenomena Hazard Performance

1.3 Codes and Standards

1.3.1 Work shall be performed in accordance with the referenced codes, standards, and documents for this specification.

1.3.2 The following codes and standards, of the exact issue shown, form part of the BUYER basis of design to the extent specified in the applicable sections of this document. In the

event of a conflict between documents referenced herein and the requirements of this specification, the requirements of this specification shall take precedence only when this specification's requirements are more stringent or conservative. If a code or standard not listed below is to be applied to the scope (see Section 1.1), apply the latest code or standard as of April 16, 2015.

1.3.2.1 Institute of Electrical and Electronics Engineers (IEEE)

A. IEEE 485 - 2010, *Recommended Practice for Sizing Lead-Acid Batteries for Stationary Applications*
B. IEEE 1184 – 2006 (R 2011), *Guide for Batteries of Uninterruptible Power Supply Systems*
C. IEEE 1188 – 2005 (1188a – 2014), *Recommended Practice for Maintenance, Testing, and Replacement of Valve-Regulated Lead-Acid (VRLA) Batteries for Stationary Applications*
D. IEEE 1189 - 2007, *Guide for Selection of Valve-Regulated Lead-Acid (VRLA) Batteries for Stationary Applications*
E. IEEE C62.41.1 – 2002 (R 2008) – *Guide on the Surges in Environment in Low-Voltage (1000 V and Less) AC Power Circuits*
F. IEEE C62.41.2 - 2002 (CORR 1 - 2012) – *Recommended Practice on Characterization of Surges in Low-Voltage (1000 V and Less) AC Power Circuits*

1.3.2.2 National Electrical Manufacturers Association (NEMA)

A. NEMA PE-1 - 2012, *Uninterruptible Power Systems (UPS) — Specification and Performance Verification*
B. NEMA 250 - 2014, *Enclosures for Electrical Equipment (1000 Volts Maximum)*
C. NEMA AB3 - 2013, *Molded Case Circuit Breakers and Their Application*

1.3.2.3 National Fire Protection Association (NFPA)

A. NFPA 70 - 2014, *National Electrical Code (NEC)*

1.3.2.4 Underwriter Laboratories, Inc. (UL)

A. UL 1778 - 2014, UL *Standard for Safety Uninterruptible Power Systems*
B. UL 489 - 2013, UL *Standard for Safety Molded-Case Circuit breakers, Molded-Case Switches as and Circuit Breaker Enclosures*
C. UL 1989 – 2013 (5th Ed.), UL *Standard for Safety Standby Batteries – Fifth Edition*

1.3.2.5 Regulatory Requirements

A. Code of Federal Regulations (CFR)

i. 29 CFR, *Part 1910 – 2015, Occupational Safety and Health Standards*
ii. 47 CFR 15 – 2015, *Radio Frequency Devices*

1.3.2.6 International Standard Organization (ISO)

A. ISO 9001 – 2008, 4th Ed., Quality Management Systems—Requirements

1.4 System Description

1.4.1 There are two UPS units, one (228LP-SEB-EDS-UPS-400) located in the Safety Equipment Building (SEB) and the second (251LP-EEC-EDS-UPS-100) located in the Electrical Equipment Center (EEC). Each UPS will be configured as static, double conversion, online type; each system will include a main input, a bypass input and a maintenance bypass input. On the loss of input power, each UPS system will continue to supply power to the specified loads for a minimum run-time of 15 minutes.

1.4.2 The UPS systems shall be rated and configured as shown on the single line diagrams, H-16-000616, *LAWPS Electrical One Line Diagram 251LP-EEC-EDS-UPS-100* and H-16-000617, *LAWPS Electrical One Line Diagram 228LP-SEB-EDS-UPS-400*. In addition, the data sheets include supplemental information and requirements for VENDOR input.

1.4.3 The UPS systems shall be capable of supporting operational modes such as Normal, Loss of Normal AC Input Power, Return of Normal AC Input Power Source, Transfer to Bypass AC Power Source, Retransfer to Inverter and battery fault or disconnected.

1.4.4 Upon the occurrence of an inverter overload, inverter shutdown signal, or degradation of the inverter output, the static bypass switch shall automatically transfer from the inverter output to the bypass input AC power source without interruption of power.

1.4.5 Each UPS shall utilize a communication network to provide system information and status. This network shall provide total UPS information and shall be available from the UPS front panel display. The loss of the system information network shall not cause the UPS to transfer to the bypass input power source or to drop the critical load.

1.5 Submittals

Submittals that are listed within this section shall be prepared and processed in accordance with requirements of CSI Section 01 33 00, "*Submittals*" and shall include all of the required Quality Assurance documentation in accordance with CSI Section 01 40 00, "*Quality Assurance*" .

1.5.1 All VENDOR requests for information (RFI) shall be submitted on form A-6003-417 (provided by BUYER).

1.5.2 For each UPS system included in the contract, the VENDOR shall provide timely delivery of the following technical documents prior to BUYER's release to purchase the materials and/or to commence fabrication impacted by the particular document.

1.5.2.1 Provide descriptions and catalog information in accordance with QA Clause B33.

1.5.2.2 Product data for all UPS's, battery chargers, batteries, switches and auxiliaries identified on associated data sheets. Equipment data shall include the MANUFACTURER's name

and address, the model number, and specific information on performance, operating curves and data, ratings, capacities, characteristic efficiencies, equipment dimensions, evidence of compliance with safety and performance standards, and other data required to fully describe the equipment. Data shall be submitted in sets covering complete systems or functioning units.

A. Battery product data shall include the following specialized documents:

   i. Battery charge and discharge curves.
   ii. Material Safety Data Sheets.

1.5.2.3 Bill of material drawings or lists shall correlate components to outline drawings and diagrams. Components shall be identified by MANUFACTURER and catalog number. If the catalog number referred to does not contain all operating characteristics, such as in case of an auxiliary relay, the following information, but not limited to, shall also be supplied to enable the BUYER to analyze circuits under various conditions:

A. Nominal voltage
B. Operating voltage range
C. Minimum pick-up voltage
D. Drop-out voltage
E. Pick-up time at minimum pick-up voltage
F. Inrush VA and power factor, if AC
G. Continuous VA AC, coil resistance - DC
H. Number and type of contacts
I. Contact ratings: making, continuous, interrupting

1.5.2.4 Dimensional drawing(s) for the UPS system and auxiliary equipment, indicating all dimensions necessary for support, lift and shipping of the completed units. Drawings shall be provided to show front elevation, floor plan, top view, conduit entry/exit locations, gross weight, center of gravity, required clearances and access envelopes.

1.5.2.5 Elementary diagrams shall contain the following:

A. Device designation correlated to outline and wiring diagrams.
B. Contact developments for control and selector switches.
C. Each type of device internal wiring diagram.
D. Total of control circuit loads for idle, normal, and emergency operating conditions.
E. Device terminals, and terminal block points to which devices are wired shall be shown and the location of these shall be denoted (board, cabinet remote, etc.).
F. If special cables are required for external connections (coaxial, twisted pairs, twisted and shielded), they shall be identified.

1.5.2.6 Panel internal connection wiring diagrams shall show identification of devices, terminals, and connecting wires.

A. The system used for designation of control wiring shall show device identification with identified terminals arranged in substantially correct physical relationship, and shall provide sufficient information at each wire termination to locate the other termination

without recourse to routing, supplementary tabulations, or to information on function of wire. The VENDOR is solely responsible for correctness of the internal wiring and for proper functioning of the equipment being furnished.

1.5.2.7 A cabling interface diagram shall be prepared to show the VENDOR's terminal block arrangement and location for all interfaces with the BUYER's power and control cables.

1.5.2.8 Equipment heat loss data shall be provided for each UPS system.

1.5.2.9 The VENDOR shall provide calculations and associated equipment documentation supporting the design of the UPS system. Calculations specific for verification of battery sizing and appropriate run-time are required.

1.5.2.10 The VENDOR shall identify and submit all software and firmware used on the UPS for approval. The submittal shall list all applicable software and firmware, current software version, and software VENDOR.

1.5.3 The following procedures, plans and qualifications shall be approved by the BUYER prior to implementation of the procedures and plans:

1.5.3.1 Test and inspection plans/procedures for requirements specified in Section 2.6 shall be submitted for BUYER review and approval in accordance with QA Clause B13.

1.5.3.2 Material control procedure

1.5.3.3 Packaging, Storage, Shipping, and Handling (PSSH) Plan in accordance with QA Clause B85

1.5.4 The VENDOR shall prepare a Final Data Package submittal for each item. The Final Data Package shall be submitted and approved by the BUYER prior to release for shipment. The package shall include:

1.5.4.1 The VENDOR's Certificate of Conformance (CoC) in accordance with QA Clause B79.

1.5.4.2 Dimension Verification Reports (including critical dimensions), in accordance with QA Clause B52.

1.5.4.3 Certified Factory Acceptance Test Reports, in accordance with QA Clause B52.

1.5.4.4 Final Inspection Report which documents the results of the final inspection, in accordance with QA Clause B52.

1.5.4.5 Non Conformance Reports (NCR) dispositioned as "use-as-is" or "repair", in accordance with QA Clause B22.

1.5.4.6 MANUFACTURER's/VENDOR's data (i.e., data sheets, material cut sheets, operation and maintenance manuals, etc.) in accordance with QA Clause B33.

1.5.4.7 Approved design changes including Engineering Change Notices (ECN's) & Design Change Notices (DCN's).

1.5.4.8 Detailed listing of Recommended Spare Parts in accordance with QA Clause B82 for commissioning support and one year operation.

1.5.4.9 Electrical components within the assembly listed by a Nationally Recognized Testing Laboratory (NRTL) and labeled accordingly (if applicable), per QA Clause B66.

1.5.4.10 Certification against the procurement of potentially suspect or counterfeit items (i.e., all supplied materials shall be genuine, new, and unused), in accordance with QA Clause B76.

1.5.4.11 Installation, operations and maintenance manuals

1.6 Delivery, Storage, and Handling

1.6.1 Refer to CSI Section 01 66 00 "Delivery, Storage, and Handling" for project related requirements to supplement those identified in this specification.

1.6.2 VENDOR shall provide related submittals in accordance with requirements for the Final Data Package as identified in Section 1.5.4 above, QA Clause B85 and CSI Section 01 66 00 for Delivery, Storage, and Handling.

1.6.2.1 Battery delivery, storage and installation schedule shall be stringently coordinated with BUYER to ensure appropriate measures are taken to ensure batteries are operational when needed. Age control shall be identified in accordance with QA Clause B43.

1.7 Quality Assurance

1.7.1 The quality assurance level of UPS systems and components is Enhanced Quality Assurance (EQA).

1.7.2 Refer to CSI Section 01 40 00 "Quality Assurance" for project related requirements to supplement those identified in this specification.

1.7.3 The MANUFACTURER's plant shall be ISO 9001 certified.

1.7.4 Equipment shall comply with NEMA PE 1.

1.7.5 UPS assemblies shall be identified with a Part number/Model number, in accordance with QA Clause B32.

1.7.6 See Section 2.6 for additional shop quality controls and acceptance testing requirements.

1.7.7 Applicable QA Quality Clauses are summarized in the table below. The full QA Clause definition and associated requirements are located in CSI Section, 01 40 00, "*Quality Assurance*".

Table 1.7-1 Procurement Quality Clauses

SUPPLIER FABRICATION
B13 Fabrication/Inspection/Test Plan
B16 Source Inspection
B22 Nonconformance Documentation and Reporting
MATERIAL IDENTIFICATION
B32 Identification of Items with Part Number/Model Number
B33 Identification of Items with Catalog Cut
B43 Identification of Age Control Items
TESTING AND TEST DATA
B52 Inspection and Test Report
B66 Nationally Recognized Testing Laboratory (NRTL) Listed or Labeled Components in a System
INSPECTION AND ACCEPTANCE CRITERIA
B76 Procurement of Potentially Suspect or Counterfeit Items
B79 Certificate of Conformance
B82 Recommended Spare Parts Listing
MATERIAL HANDLING
B85 Packaging/Shipping Procedures

1.7.8 The following verification points required by this section shall be in accordance with CSI Section 01 40 00, "*Quality Assurance*" verified by the BUYER, as applicable. At a minimum, the following witness and hold points shall apply:

Table 1.7-2 Hold and Witness Point Verification

Verification Point Description	Type of Verification
Document Review and Approval	H
Prior to Inspections	H, W
Prior to Acceptance/Performance Testing	H, W
Routine Production Tests	H
Full Load Test	W
Final Inspection Prior to Shipping	H
Prior to Shipment	H
	(H) Hold (W) Witness

1.7.1 The VENDOR shall provide required notifications of verification points in accordance with CSI Section 01 40 00, "*Quality Assurance*" as applicable, and shall not proceed past required hold points without written authorization from the BUYER QA representative. Source inspection at VENDOR facility shall be in accordance with QA Clause B16.

1.7.2 All defects in materials, wiring and other issues as a result of testing shall be repaired or replaced by the VENDOR at no additional cost to the BUYER.

1.8 Site Conditions

1.8.1 The Low Activity Waste Pretreatment System (LAWPS) design site conditions are as follows:

– Outdoor temperature:	-25°F to 115°F
– Outdoor relative humidity:	0 – 100%
– Barometric pressure:	14.35 psia (measured at a meteorological tower 733 feet above sea level)

1.8.2 The LAWPS EEC and SEB conditions are as follows:

- Normal Operational Indoor temperature:	60°F to 80°F
- Off-Normal Indoor temperature:	-25°F to 115°F
- Normal Operational Indoor relative humidity:	5% to 70% RH @ Normal Operational Indoor Temperature
- Off-Normal Indoor relative humidity:	0% to 100% RH @ Off-Normal Indoor Temperature

1.8.3 The UPS systems and components will be located indoors and shall be suitable for operation in the conditions indicated above.

1.8.4 The UPS systems and components are located in a non-hazardous area.

1.8.5 The UPS systems and components shall meet and withstand Natural Phenomena Hazard (NPH) requirements for general service equipment specified in CSI Section 01 81 01, "General Service Systems and Components Natural Phenomena Hazard Performance Requirements".

2.0 PART 2 – PRODUCTS

2.1 Manufacturers

2.1.1 See UPS data sheets for specified MANUFACTURER.

2.1.2 It is the VENDOR's responsibility to review the catalog information listed on the associated data sheet and to verify it meets requirements identified in this specification. The VENDOR shall notify the BUYER of any discrepancies and recommend modifications needed to meet the requirements.

2.1.3 See CSI Section 01 25 00, "Substitutions and Design Changes" for submittal of equipment alternatives.

2.2 Materials

2.2.1 Not Used.

2.3 Equipment

2.3.1 Operational Requirements

2.3.1.1 Each UPS system shall be capable of supporting the following automatic operational modes including the following:

A. Normal Conditions: Load is supplied with power flowing from the normal power input terminals, through the rectifier-charger and inverter, with the battery connected in parallel with the rectifier-charger output.
B. Abnormal Supply Conditions, Power Failure: The batteries shall supply DC power to the inverter so that there is no interruption of power to loads upon deviation of the normal AC input power source tolerances or complete failure. The batteries are discharging and supplying power to the inverter for the specified protection time. Power re-routing via switches shall not be required.
C. Return of Normal AC Input Power Source: The rectifier shall start and assume DC load from batteries once normal AC input power source returns. The rectifier shall then supply the inverter with DC power. This shall be an automatic function and shall cause no disturbance to loads.
D. Transfer to Bypass Input AC Power Source: Upon the occurrence of an inverter overload, short circuit, inverter shutdown signal, or degradation of the inverter output, the static bypass switch shall automatically transfer the loads from the inverter output to the bypass input AC power source without interruption of power. When the bypass input AC power source is above or below normal voltage limits or out of synchronism with the inverter, the transfer shall be inhibited.

E. Retransfer to Inverter: The static bypass switch shall be capable of automatically retransferring the loads back to the inverter after its output has returned to normal and stabilized for a period of time. Retransfer shall not occur if the two sources are not synchronized.
F. Battery Fault: Under battery fault conditions, the UPS shall continue to function and meet performance criteria except for the battery reserve time.

2.3.1.2 The UPS shall utilize a communication network to provide system information/status, operating mode information, and meter data. This network shall provide total UPS information and shall be available from the UPS front panel display. The loss of this system information network shall not cause the UPS to transfer to bypass or drop the load.

Communication to the PCS shall be Modbus over Transmission Control Protocol (TCP). In the case that Hypertext Transfer Protocol (HTTP) is available, it shall only be used for data display purposes.

2.3.1.3 Each UPS system shall be capable of supporting the manually induced operational modes including the following:

A. Turning Inverter Off: Turning the inverter off causes the static bypass transfer switch to transfer the load directly to the bypass AC supply circuit without disturbance or interruption.
B. Turning Inverter On: Turning the inverter on causes the static bypass transfer switch to transfer the load to the inverter.
C. Transfer to Bypass AC Power Source: Transfer to the bypass source can be accomplished manually through a push button without interruption. However, manual transfer to the bypass source shall lockout automatic retransfer to the inverter and shall require manual retransfer to the inverter.
D. Downgrade: Upon disconnection of batteries via the fused disconnect switch for maintenance/testing, the UPS shall continue to function and meet performance criteria except for the battery reserve time.

2.3.1.4 Maintenance Bypass/Isolation Switch Operation: Switch is interlocked so it cannot be operated unless the static bypass transfer switch is in the bypass mode. The device provides manual selection among the three conditions in subparagraphs below without interrupting supply to the load during switching:

A. Full Isolation: Load is supplied by the maintenance bypass AC power source; bypassing the UPS. Normal UPS AC input circuit, static bypass transfer switch, and UPS load terminals are completely disconnected from external circuits.
B. Maintenance Bypass: Load is supplied by the maintenance bypass AC power source; bypassing the UPS. UPS AC supply terminals are energized to permit operational checking, but system load terminals are isolated from the load.
C. Normal: Normal UPS AC supply terminals are energized and the load is supplied through either the static bypass transfer switch and the UPS rectifier-charger and inverter, or the battery and the inverter.

2.3.2 Performance Requirements

2.3.2.1 The UPS shall perform as specified herein while supplying rated full-load current, composed of any combination of linear and nonlinear load, up to 100 percent nonlinear load with a load crest factor of 3.0, under the following or combinations of the following conditions:

A. Inverter is switched to battery source.
B. Steady-state AC input voltage deviates up to plus or minus 10 percent from nominal voltage.
C. Steady-state input frequency deviates up to plus or minus 5 percent from nominal frequency.
D. Total Harmonic Distortion (THD) of input voltage is 15 percent or more with a minimum crest factor of 3.0, and the largest single harmonic component is a minimum of 5 percent of the fundamental value.
E. Load is 30 percent unbalanced continuously.

2.3.2.2 If battery is the sole energy source supplying rated full UPS load current at 80 percent power factor, duration of supply shall be a minimum of 15 minutes.

2.3.2.3 The overall UPS efficiency shall be equal to or greater than 90 percent at 100 percent load, 87 percent at 75 percent load, and 85 percent at 50 percent load.

2.3.2.4 The maximum permissible acoustical noise emanating from any UPS component under any condition of normal operation shall be 72 dBA measured 4.9 ft from nearest surface of component enclosure.

2.3.2.5 The maximum energizing inrush current shall be 8 times the full-load current.

2.3.2.6 The maximum AC output-voltage regulation for loads up to 50 percent unbalanced shall be plus or minus 2 percent over the full range of battery voltage.

2.3.2.7 The output frequency of 60 Hz shall be limited to plus or minus 0.5 percent over the full range of input voltage, load, and battery voltage.

2.3.2.8 Limitation of harmonic distortion of input current to the UPS shall be as follows:

A. Either a tuned harmonic filter or an arrangement of rectifier-charger circuits shall limit THD to 5 percent, maximum, at rated full UPS load current, for power sources with X/R ratio between 2 and 30. Input power data shall be indicated by BUYER on the data sheets as referenced in Appendix A.

2.3.2.9 The maximum harmonic content of the output-voltage waveform shall be 5 percent rms total and 3 percent rms for any single harmonic, for rated full load with THD up to 50 percent, with a crest factor of 3.0.

2.3.2.10 Input power factor shall be a minimum of 0.85 lagging when supply voltage and current are at nominal rated values and the UPS is supplying rated full-load current.

2.3.2.11 EMI Emissions shall comply with FCC rules and regulations and with 47 CFR 15 for Class A equipment.

2.4 Components

2.4.1 UPS System Requirements

2.4.1.1 Rectifier-charger, inverter, static bypass transfer switch, and system controls shall be solid-state devices using hermetically sealed, semiconductor elements.

2.4.1.2 Enclosures shall be NEMA 250, Type 12 and shall be front accessibly only for maintenance activities and to allow for the easy removal of major components.

2.4.1.3 Control assemblies shall be mounted on modular plug-ins, readily accessible for maintenance.

2.4.1.4 Surge suppression for protection of internal UPS components from surges that enter at each AC power input connection including main disconnect switch, static bypass transfer switch shall be provided. Protection shall also be provided for rectifier-charger, inverter, controls, and output components.

A. Factory-installed surge suppressors tested according to IEEE C62.41.1 and IEEE C62.41.2, Category B shall be used.
B. Additional Surge Protection: Protect internal UPS components from low-frequency, high-energy voltage surges described in IEEE C62.41.1 and IEEE C62.41.2. Design the circuits connecting with external power sources and select circuit elements, conductors, conventional surge suppressors, and rectifier components and controls so input assemblies will have adequate mechanical strength and thermal and current-carrying capacity to withstand stresses imposed by 40-Hz, 180 percent voltage surges described in IEEE C62.41.1 and IEEE C62.41.2.

2.4.2 Rectifier-Charger Requirements

2.4.2.1 The battery charger shall consist of surge suppression and the rectifier.

2.4.2.2 General

A. The system internal DC source shall be a full wave solid state rectifier with microprocessor based control circuitry to provide constant voltage and required current output when operated from the BUYER's normal AC source.
B. The rectifier shall have automatic AC line voltage compensation and automatic DC voltage regulation.
C. The rectifier shall be for ungrounded (DC output) operation. It shall be capable of operation, while disconnected from the BUYER's external battery bank.
D. The rectifier shall be compatible with its associated battery feed and inverter.
E. The battery charger shall be sized adequately to supply the inverter during rated full output load conditions and simultaneously recharge the battery from fully discharged condition to 95 percent of full charge within 10 times the rated discharge time for duration of supply under battery power at full load.
F. The output Ripple shall be limited by output filtration to less than 0.5 percent of rated current, peak to peak to maintain battery life.

G. Control Circuits shall be designed to be immune to frequency variations within rated frequency ranges of normal and emergency power sources.
H. Battery Float-Charging Conditions shall comply with battery MANUFACTURER's written instructions for battery terminal voltage and charging current required for maximum battery life.

2.4.3 Inverter Requirements

2.4.3.1 The inverter shall be a solid-state switching device providing uninterrupted power transfer.

2.4.3.2 General

A. The inverter shall have noise filter capacitors and input surge protection. The inverter shall be of a pulse width modulated (PWM) inverter design.
B. The inverter shall include controls for voltage regulation and current limitation.
C. The inverter shall sense low DC voltage and turn off the inverter at the battery final discharge voltage to protect the battery.

2.4.3.3 The inverter shall be capable of operating at full kVA capacity, while supplying loads with a total power factor (based on the vector sum) in the range specified on the BUYER's data sheets.

2.4.4 Static Transfer Switch

2.4.4.1 The static switch shall be a high speed transfer device provided as an integral part of the UPS; one input shall be connected to the inverter output, the other connected to the bypass power source.

2.4.4.2 General

A. The static switch shall be 150% load rated.
B. The static switch shall transfer under overload or short circuit conditions to the alternate (bypass input) power source.
C. The static switch shall have integrated logic control which shall sense voltage, current, and frequency of the normal and bypass inputs, and provide automatic uninterrupted transfer of the load to the bypass input source.
D. The static switch shall be provided with a manual test switch.
E. The transfer time of the static switch shall not exceed 10 microseconds.
F. The switch shall re-transfer from the bypass input to the inverter source provided the following conditions are met:

i. The inverter source and the alternate source are synchronized.
ii. The automatic re-transfer function is enabled.

2.4.5 Battery Requirements

2.4.5.1 For each UPS module, provide a storage battery system with sufficient ampere-hour rating to maintain UPS output at full capacity for the specified duration. The battery shall be of heavy-duty, industrial design suitable for UPS service.

2.4.5.2 Batteries shall be valve-regulated lead-acid (VRLA) units. Battery banks shall be equipped with fusible disconnect switches.

2.4.5.3 The batteries shall be sized by the VENDOR in accordance with IEEE 485 to supply DC power to loads for fifteen (15) minutes run-time during loss of normal power. VENDOR shall provide battery sizing calculations. VENDOR shall provide battery discharge tables/curves supporting the equipment sizing; at 80% rated battery capacity, the documentation shall demonstrate that the inverter load (with efficiency factors included) can be adequately supplied.

2.4.5.4 Batteries shall have a life expectancy of 20 years. The MANUFACTURER is to provide life cycle replacement and maintenance instructions required to achieve 20-year cumulative service.

2.4.5.5 All cells within the battery string shall be of the same MANUFACTURER and model.

2.4.5.6 The battery design shall make-up part of the integrated UPS system and capable of supporting the rated full-load output power for a run-time period of 15 minutes. Batteries shall be configured in open racks in accordance with Section 2.4.5.9 herein.

2.4.5.7 Battery Cells

A. All cells shall be sealed in acid tight, spray proof, transparent plastic containers with sealed covers. The sealing between the container and the cover must remain tight over the life of the cell.
B. Sediment space shall be provided below the plates for the material accumulated during the life of the battery, permitting unimpaired operation and precluding shorting of plates.

2.4.5.8 Battery Plates

A. The plates shall be of a material with adequate strength to retain their shape during cyclic operation. The plates should have good conductivity with low internal resistance to carry the current to and from all parts of the plates to the cell posts under all operating conditions.
B. Negative plates shall be designed and constructed to match the positive plate and have a life equal to or greater than the positive plates.
C. The retainers and separators provided between the plates shall be impervious to the chemical action within the cell, and shall provide proper spacing and insulation between the plates, and permit free circulation of electrolyte.
D. The cell elements shall be designed such that they allow normal growth of the positive plates without causing any undue stress on the cell jar walls.

2.4.5.9 Battery Racks

A. VENDOR shall furnish steel battery racks or equivalent module supporting structure properly insulated and painted.
B. The cell mounting rails shall be provided with acid resistant insulation.
C. The insulation between the cells and rail steel shall be rated for the full voltage of the battery bank.

D. Battery terminal or exposed interconnecting bus bars shall be provided with insulated covers to protect against inadvertent contact.
E. Battery rack shall be designed to allow removal of an individual cell anywhere in the lineup.
F. The battery rack shall be provided with all necessary components and parts for a complete free-standing installation. Battery racks shall include, but not be limited to:
   i. Frames
   ii. Support rail assemblies and insulating covers
   iii. Cross braces
   iv. Restraint rails, brackets and cell spacers
   v. Nuts, bolts and washers
G. Each rack assembly shall be provided with two ground pads (one at each end) for connections of the BUYER's grounding cables.
H. The battery rack configuration is subject to the BUYER's approval and shall be designed to fit within the envelope listed below:
   i. 228LP-SEB-EDS-UPS-400 (Battery Bank Tag: 228LP-SEB-EDS-BAT-400)
      a. Width – 3 feet, 6 inches
      b. Depth – 2 feet
   ii. 251LP-EEC-EDS-UPS-100 (Battery Bank Tag: 251LP-EEC-EDS-BAT-100)
      a. Width – 5 feet, 10 inches
      b. Depth – 2 feet
I. Secondary containment shall be provided for installation under batteries; containment shall be sized to contain the volume of one battery container at a minimum.

2.4.6 Maintenance Bypass Switch Requirements

2.4.6.1 A manually operated make-before-break bypass switch shall be provided to allow transfer of the loads directly from the inverter to the alternate source.

2.4.6.2 The maintenance bypass switch shall also electrically isolate the static switch and the inverter from the bypass source.

2.4.6.3 The maintenance bypass switch shall be installed in a separate enclosure from the UPS.

2.4.6.4 Input circuit breaker shall be provided for the maintenance bypass switch in the separate enclosure. The circuit breaker shall have a lock-out/tag-out safety feature for maintenance.

2.4.7 Local Controls and Indications

2.4.7.1 Group displays, indications, and basic system controls shall be provided on a common control panel on the front of each UPS enclosure.

2.4.7.2 Minimum local displays, indicating devices, and controls include those listed below. Sensors, transducers, terminals, relays, and wiring shall be provided to support each items. Alarms shall include audible signals and visual displays.

2.4.7.3 Local UPS Indications:

A. Local indications shall include the following:

i. Input voltage
ii. Input current, each phase, line to line.
iii. Bypass source input voltage
iv. System output voltage
v. System output current
vi. System output frequency.
vii. DC output voltage.
viii. DC output current
ix. DC output current (battery charge/discharge).
x. Elapsed time discharging battery.

B. Basic status condition indications shall include the following:

i. UPS is in normal operation.
ii. Static transfer switch position
iii. Power supply is in (load-on battery).
iv. Synchronization Status
v. UPS is in alarm condition.
vi. Approaching end of battery operation.
vii. Inverter overtemperature.
viii. Static bypass transfer switch overtemperature.
ix. Inverter power supply fault.
x. Inverter output overvoltage or undervoltage.
xi. UPS overload shutdown.

C. Local UPS Manual controls shall include the following:

i. Inverter on-off.
ii. UPS start.
iii. Battery test.
iv. Alarm silence/reset.
v. Output-voltage adjustment.

2.4.8 Alarms

2.4.8.1 Dry-form "C" contacts shall be available for remote PCS indication of the following conditions:

A. UPS battery is supplying load
B. UPS is on-line.
C. UPS load is on bypass
D. UPS in alarm condition (common trouble).
E. Emergency power off switch, capable of local operation and operation by means of activation by external dry contacts.

2.4.9 UPS Local Alarm Panel Requirements

2.4.9.1 Labeled Light Emitting Diodes (LED)s on panel faceplate shall indicate the minimum basic status conditions identified in 2.4.8.3. Audible signal shall indicate alarm conditions. Silencing switch in face of panel silences signal without altering visual indication.

2.4.9.2 Cabinet and faceplate shall be surface or flush mounted to suit mounting conditions indicated.

2.4.10 Battery Monitoring

2.4.10.1 Battery Ground-Fault Detector: Initiates alarm when resistance to ground of positive or negative bus of battery is less than 5000 ohms.

2.4.10.2 Annunciation of Alarms shall be provided at the UPS control panel.

2.4.10.3 Additional monitoring functions and features shall include the following:

A. Measuring and recording of the total voltage at battery terminals; alarm shall be initiated for excursions outside the proper float-voltage level.
B. Ambient temperature at battery shall initiate an alarm if temperature deviates from normally acceptable range.
C. Keypad on device front panel shall provide access to monitored data using front panel display.
D. Alarm contacts provided for local alarm for battery discharge events, abnormal temperature, and abnormal battery voltage or temperature; and a single remote alarm for alarm/trouble.
E. Storage of recorded data in nonvolatile electronic memory.
F. A Universal Serial Bus (USB) 2.0 port with cable shall permits downloading of data to a portable PC.

2.4.11 Control Wiring

2.4.11.1 All necessary control wiring shall be completely wired by the MANUFACTURER. Wiring shall not be smaller than No. 14 AWG stranded copper conductor with Type SIS 600 V insulation.

2.4.11.2 All wiring shall be marked at both ends with wire numbers as shown on the schematics. Labels shall be machined embossed, heat shrink tubular type.

2.4.11.3 All control wiring shall be secured in place by cable ties that are held in place by metal screws or studs. Cable ties shall be made of polyamide nylon or equal. Cable ties using self-adhesive materials as a means of support are not acceptable.

2.4.12 Terminals and Terminators

2.4.12.1 All control requiring a connection to an external control device shall be terminated in a 600 V terminal block that is clearly and uniquely marked. A minimum of two or 20%

spare terminals (whichever is greater) shall be provided. Control terminals using a solderless box lug shall be sized for a wire range of #14 AWG to #8 AWG.

2.4.12.2 AC line input connections shall be made by others directly to the AC input circuit breaker or incoming terminals.

2.4.13 Additional Materials/Recommended Spare Parts

2.4.13.1 VENDOR shall provide the necessary spare parts, special tools and fixtures required for the initial startup of the UPS system. A separate line item for this shall be listed in the initial proposal. Parts, tools, etc, shall include, but not be limited to the following:

A. Two diodes and/or silicon controlled rectifiers (SCR) for rectifier assembly used in the UPS system.
B. Five (5) lamps for each type of indicating lights used in the UPS system.
C. Two (2) color caps of each color used for indicating lights used in the UPS system.
D. Provide six (6) fuses of each type and size installed in each UPS.
E. Furnish one set of special tools, calibration devices and instruments required for operation, calibration and maintenance of the equipment.
F. Provide one (1) pint of touch-up paint that matches UPS finish.
G. Provide any other spare parts as recommended by VENDOR.

2.5 Fabrication

2.5.1 Not Used

2.6 Shop Quality Control

2.6.1 The quality control requirements listed in this section are in addition to the Quality Assurance Program requirements specified in Section 1.7 of this specification.

2.6.2 The VENDOR shall be responsible for performing and documenting all inspections and testing necessary to demonstrate compliance with all drawings and electrical requirements in this specification as well as other relevant specifications.

2.6.3 Shop Tests

2.6.3.1 Routine (production) tests shall be performed on the UPS.

2.6.3.2 The UPS system shall be completely assembled, wired, and adjusted in the factory under VENDOR's standard quality control procedures, to assure the accuracy of the wiring and functioning of the equipment.

2.6.3.3 Full-load Test (at 100% loading for a 15 minute duration)

2.6.4 Factory Acceptance Testing/Performance Testing

2.6.4.1 The VENDOR shall be responsible for performing and documenting all Factory Acceptance Test (FAT), inspections and testing necessary to demonstrate compliance with all relevant specifications, drawings, related standards and acceptance criteria as outline in the test plan.

2.6.4.2 Testing shall be performed following the approved test plans in accordance with requirements identified in Section 1.7.

3.0 PART 3 – EXECUTION

3.1 Preparation

3.1.1 Not Used.

3.2 Erection, Installation and Application

3.2.1 Not Used.

3.3 Field Quality Control

3.3.1 Not Used.

3.4 Adjusting and Cleaning

3.4.1 Not Used.

3.5 Demonstration

3.5.1 Not Used.

3.6 Protection

3.6.1 Not Used.

4.0 LIST OF APPENDICES

APPENDIX A – Supporting Documents Issued with Specification

Appendix A – Supporting Documents Issued with this Specification

Data Sheets:

- 251LP-EEC-EDS-UPS-100
- 228LP-SEB-EDS-UPS-400

Drawings:

- H-16-000616, *LAWPS Electrical One Line Diagram 251LP-EEC-EDS-UPS-100*
- H-16-000617, *LAWPS Electrical One Line Diagram 228LP-SEB-EDS-UPS-400*

SPECIFICATION

19-2-003

CONTROL VALVE SPECIFICATION

AECOM ATKINS AREVA

LOW ACTIVITY WASTE PRETREATMENT SYSTEM

Project No. 31269 (T5L01)

Document No. 19-2-003

CSI Section 40 91 00

Safety Related ☒ Non-Safety Related ☐

CONTROL VALVE SPECIFICATION

Prepared for

Washington River Protection Solutions, LLC

Revision: 0 Status: Final

HABIB TANIOS FEGHALI
STATE OF WASHINGTON
52852
REGISTERED
PROFESSIONAL ENGINEER

5/17/2017

FOR PERMITTING
5/17/2017

AECOM ATKINS AREVA

Project Number: 31269 (T5L01)
Doc. No.: 19-2-003
Date: May 17, 2017
Revision: 0

REVISION PAGE

Project Name:	LAWPS	**Discipline:**	19
Client:	Washington River Protection Solutions	**Project Number:**	31269 (T5L01)
		Latest Revision:	0

REVISION SIGNATURES

J. Brinkley John Brinkley DN: cn=John Brinkley, o=AECOM, ou=MS, email=john.brinkley@aecom.com, c=US Date: 2017.05.15 08:15:08 -06'00' Adobe Acrobat Reader version: 2017.009.20044		H. Feghali Habib Feghali Digitally signed by Habib Feghali DN: cn=Habib Feghali, o=AECOM, ou=Management Services, email=habib.feghali@aecom.com, c=US Date: 2017.05.15 15:14:39 -06'00'	
Prepared by	**Date**	**Approved by (SDE/Lead)**	**Date**
D. Horn Daniel Horn	Digitally signed by Daniel Horn Date: 2017.05.15 08:23:07 -06'00'	P. Bell Paul Bell	Digitally signed by Paul Bell Date: 2017.05.15 15:36:23 -06'00'
Checked by	**Date**	**Approved by (QA)** For DP	**Date**
Bernard S Din	Digitally signed by Bernard S Din DN: cn=Bernard S Din, o=AECOM, ou, email=bernard.din@aecom.com, c=US Date: 2017.05.15 15:25:55 -06'00'	Dan Priebe Michael Schultze	Digitally signed by Michael Schultze Date: 2017.05.15 18:43:21 -06'00'
Verified by (if required)	**Date**	**Approved by (PEM)**	**Date**

Status	Rev. No.	Date	Prepared By	Pages	Description of Changes
Final	0	5/17/2017	JAB	All	Approved for Bid

Safety Related: Yes ☒ No ☐	**Quality Level:** Full QA ☒ Enhanced QA ☐ Commercial QA ☐

TABLE OF CONTENTS

1.0 PART 1 - GENERAL 1

1.1 Section Scope 1
1.2 Related Sections 1
1.3 Codes and Standards 2
1.4 System Description 4
1.5 Submittals 5
1.6 Delivery, Storage & Handling 10
1.7 Quality Assurance 11
1.8 Site Conditions 13

2.0 PART 2 – PRODUCTS 15

2.1 Manufacturers 15
2.2 Material 15
2.3 Equipment 15
2.4 Components 20
2.5 Fabrication 23
2.6 Shop Quality Control 25

3.0 PART 3 – EXECUTION 26

3.1 Preparation 26
3.2 Erection, Installation & Application 26
3.3 Field Quality Control 26
3.4 Adjusting and Cleaning 26
3.5 Demonstration/Testing 26
3.6 Protection 29

4.0 LIST OF APPENDICES 30

4.1 Appendix A - Supporting Documentation Issued with this Specification 30

LIST OF TERMS

Abbreviations and Acronyms

Term	Definition
ANSI	American National Standards Institute
API	American Petroleum Institute
ASME	American Society of Mechanical Engineers
ASTM	American Society for Testing and Materials
ASNT	American Society for Nondestructive Testing
AWS	American Welding Society
CFR	Code of Federal Regulations
CGD	Commercial Grade Dedication
CGI	Commercial Grade Item
CMTR	Certified Material Test Reports
CoC	Certificate of Conformance
COTS	Commercial-off-the-shelf
CQA	Commercial Quality Assurance
CSI	Construction Specifications Institute
CWI	Certified Welding Inspector
DOE	U. S. Department of Energy
EQA	Enhanced Quality Assurance
FCI	Fluid Controls Institute
FMEDA	Failure Modes, Effects, and Diagnostics Analysis
FQA	Full Quality Assurance
HART	Highway Addressable Remote Transducer
IEC	International Electrotechnical Commission
IEEE	Institute of Electrical and Electronics Engineers
ILAC	International Laboratory Accreditation Cooperation
ISA	International Society of Automation
ISO	International Organization for Standardization
LAWPS	Low Activity Waste Pretreatment System
LLC	Limited Liability Company
NACLA	National Cooperation for Laboratory Accreditation
NCSL	National Conference of Standards Laboratories

Term	Definition
NDE	Nondestructive Examination
NEC	National Electric Code
NFPA	National Fire Protection Association
NPS	Nominal Pipe Size
NPT	National Pipe Thread
NRTL	Nationally Recognized Testing Laboratory
NQA	Nuclear Quality Assurance
PDF	Portable Document Format
PSSH	Packaging, Storage, Shipping, and Handling
PWHT	Post Weld Heat Treatment
QA	Quality Assurance
QAIP	QA Inspection Plan
QL	Quality Level
RFI	Request for Information
SDC	Seismic Design Criteria
SDS	Safety Data Sheet
SIL	Safety Integrity Level
SIS	Safety Instrumented System
SMAW	Shielded Metal Arc Welding
SPL	Sound Pressure Level
SS	Safety Significant, Stainless Steel
TBD	To Be Determined
TBV	To Be Verified
UL	Underwriters Laboratories
USA	United States of America
WAC	Washington Administrative Code
WPS	Welding Procedure Specification
WRC	Welding Research Council
WQR	Welding Qualification Record

Units

Unit	Description
In^2, Ft^2	Area, Square Inch, Square Foot
ppm	Concentration, Parts per Million
A	Current, Ampere
mA	Current, Milliampere
Lb/Hr	Flow (mass), Pounds per Hour
GPM	Flow (volumetric), Gallons per Minute
Cv	Flow Coefficient
Hz	Frequency, Hertz
in	Length, Inch
Lb	Mass, Pound
psia	Pressure, Pounds per Square Inch - Absolute
psid, inH_2O	Pressure, Pounds per Square Inch – Differential, Inches of Water
psig	Pressure, Pounds per Square Inch - Gauge
RH	Relative Humidity
°C	Temperature, Degree Centigrade
°F	Temperature, Degree Fahrenheit
cP	Viscosity, Centipoise
VAC	Voltage, Alternating Current
VDC	Voltage, Direct Current

Definitions

BUYER – The company for whom the VENDOR is performing work or services.

COMMERCIAL QUALITY ASSURANCE (CQA) – Level of controls for those items, services, or processes where, based on an evaluation of risk or nuclear safety, no additional quality controls beyond the provider's published or stated attributes of the item, service, or process is required.

DESIGN CHANGE – Within the context of this specification, a DESIGN CHANGE is technically equivalent to a SUBSTITUTION (see SUBSTITUTION). However, the term DESIGN CHANGE may be used to refer to more significant changes to the design compared to a simple substitution.

DEVIATION – Any departure from the requirements contained in the purchase order and specification which VENDOR proposes to incorporate if approved by BUYER.

ENHANCED QUALITY ASSURANCE (EQA) – Level of controls for those items, services, or processes where, based on an evaluation of risk or nuclear safety, additional controls beyond the provider's published or stated attributes of the item, service, or process are needed to verify critical attributes.

FULL QUALITY ASSURANCE (FQA) – Level of controls applied for items, services, or processes that are commensurate with the controls invoked under ASME NQA-1 or other appropriate national consensus standard.

HANDLING – The movement or transportation of items following receipt from offsite/ project locations. This includes movement within storage areas and movement/transportation from receipt or storage areas to field locations. Handling requirements include the need for special handling tools and equipment, restrictions on material composition of surfaces in contact with the item, protection against damage or deterioration, which could occur during movement and placement, protection against physical damage due to excessive shock or vibration, and protection against entry of dirt, water, or other contaminants.

HOLD POINT – A Mandatory inspection activity beyond which work shall not proceed until (1) the inspection is performed by an independent inspector and/or BUYER and acceptance is authenticated, or (2) a written release is authorized by the organization who established the hold point.

MANUFACTURER – The Party responsible for making the product

MORE CONSERVATIVE – "More conservative" shall be interpreted as "more protective of the health, safety and well-being of Site workers and facilities, the public, and environment, as applicable."

NONCONFORMANCE – A deficiency in characteristic, documentation, or procedure that renders the quality of an item or activity unacceptable or indeterminate.

PROCUREMENT QUALITY CLAUSES (QA CLAUSES) – Procurement quality clauses are to be used for the acquisition of items and services. The clauses establish contractual obligations for quality program systems, identification, traceability, documents submittals, testing, reporting, qualification, special process controls, inspections, etc.

PRODUCT DATA – Printed information including, but not limited to, catalog cuts, color charts, illustrations, diagrams, templates, performance curves, brochures, and other forms of Product literature.

QUALITY ASSURANCE RECORDS – Quality assurance plans, procedures, and records, including completed documents that furnish evidence of the quality of an item or activities affecting quality.

SHALL / MUST – Denotes project requirements, compliance is required.

SHIPPING – The movement of items from an off-site/project location (VENDOR, warehouse, etc.) to an on-site/project location, or movement from an onsite/ project location to an off-site/project location. Shipping requirements include packaging and securing of items to protect against damage or deterioration which could occur during movement and transportation, protection against physical damage due to excessive shock or vibration, protection against entry of dirt, water, or other contaminants, and protection against other environmental conditions such as temperature or humidity.

SHOULD – Denotes recommendation or expectation, compliance is expected.

SPECIFICATION – Refers to any design, fabrication or supply specification.

STORAGE – Holding of items in areas that address: the probable maximum period to be held, the inherent physical limitations of the item itself, and required protection from potential hazards such as fire, corrosion, chemical attack and environmental conditions. Storage also includes the requirements for maintaining the integrity and operability of items through routine maintenance, cleaning, or other means of preservation.

SUBSTITUTION – Any change or deviation from issued approved drawings, designs, methods, or contract terms and conditions. Changes in products, materials, equipment, methods of construction, and test criteria required by the Contract Documents proposed by the VENDOR after award of the Contract are considered to be requests for substitution.

VENDOR – The company responsible for the supply of equipment and/or services.

WITNESS POINT – An inspection activity beyond which work shall not proceed until an inspector and/or BUYER is notified and (1) the inspection is performed and released, or (2) the inspection is deferred and can be completed at a later time, or (3) a written waiver is issued by the organization who established the witness point.

1.0 PART 1 - GENERAL

1.1 Section Scope

1.1.1 This section establishes the minimum requirements for the procurement of automatic valves for the Low Activity Waste Pre-treatment System (LAWPS) Project (Project T5L01). This specification includes pressure relief valves located within the pits and automatic valves and pressure relief valves that are located outside of process pits and vaults. The scope of the services identified in this specification encompasses both safety and non-safety related valves. The Quality Level (QL) and Safety Significance of each item is determined by referring to the Valve Data Sheet(s) attached to the procurement documents accompanying this specification.

1.1.2 This specification applies to all valve assemblies, including actuators, positioners, limit switches, solenoid valves and accessories, furnished by the VENDOR.

1.1.3 instrumentation and accessories furnished by the instrumentation VENDOR.

1.1.4 This document serves to define the minimum requirements for control valves applied on the LAWPS project.

1.1.5 The following valves are covered within this section:

- Automatic On/Off valves that are located outside pits and vaults, and that are not required to be remotely maintainable
- Modulating Control Valves that are located outside pits and vaults and that are not required to be remotely maintainable
- Self-Contained Pressure Regulators
- Pressure Relief Valves

1.1.6 Valves that are located in process pits and vaults which are required to be remotely maintainable are included in "Specialty Valves and Instrumentation Procurement Specification," 15-2-022.

1.1.7 VENDOR shall assume complete responsibility for the design, fabrication, inspection, testing and shipping, including all documentation as required by BUYER and detailed in the purchase order and this specification.

1.2 Related Sections

1.2.1 The following related documents contain additional instrumentation requirements:

01 25 00	Substitutions and Design Changes
01 33 00	Submittals
01 40 00	Quality Assurance
01 60 00	Labeling
01 66 00	Delivery Storage and Handling

01 81 01	General Service Natural Phenomena Hazard Performance Requirements
01 81 02	Safety Natural Phenomena Hazard Performance Requirements
40 05 00	Piping, Fittings and Flanges
40 05 00 11	Piping Materials Specification
40 05 05 33	Pipe Welding

1.2.2 Should there be any conflicts/discrepancies amongst these documents, this specification and/or datasheets; the VENDOR shall request a written resolution from the BUYER or BUYER's representative.

1.3 Codes and Standards

1.3.1 Work shall be performed in accordance with the referenced codes, standards, and documents for this specification.

1.3.2 The following codes and standards, of the exact issue shown, form part of the BUYER basis of design to the extent specified in the applicable sections of this document. In the event of a conflict between documents referenced herein and the requirements of this specification, the requirements of this specification shall take precedence only when this specification's requirements are more stringent or conservative. If a code or standard not listed below is to be applied to the scope (see Section 1.1), apply the latest code or standard as of April 16, 2015. VENDOR shall state, with proposal, any exceptions to these standards that, in VENDOR's opinion, are not applicable in whole or part.

1.3.3 In addition to Codes and Standards listed herein, all materials and workmanship shall be in accordance with all applicable US and local jurisdiction laws, codes and regulations.

1.3.4 Government Documents

1.3.4.1 DOE – United States Department of Energy
- DOE Order 414.1D, *Quality Assurance*

1.3.4.2 OSHA – Occupational Safety and Health Administration
- 29 CFR 1910 (2012)

1.3.4.3 Washington Administrative Code (WAC)
- 296-46B-010, *Inspections*
- 296-46B-903, *Equipment Standards*
- 296-46B-997, *Engineer Approval*
- 296-46B-999, *Electrical Testing Laboratory Requirements*

1.3.5 Non-Government Documents

1.3.5.1 ASME - American Society of Mechanical Engineers
- ASME B16.34, (2013), *Valves Flanged, Threaded and Welding End*
- ASME B31.3 (2012), *Process Piping*

- ASME B46.1 (2009), Surface Texture (Surface Roughness, Waviness, and Lay)
- ASME NQA-1, 2008 (2009 Addenda), *Quality Assurance Requirements for Nuclear Facility Applications*
- ASME QME-1 (2012), *Qualification of Active Mechanical Equipment Used in Nuclear Facilities*

1.3.5.2 ASNT – American Society for Nondestructive Testing

- ASNT SNT-TC-1A (2011), *Recommended Practice Personnel Qualifications and Certification in Non-destructive Testing*

1.3.5.3 ASTM – American Society for Testing and Materials

- ASTM A262 (2015), Sizing and Selection (2014), *Standard Practice for Detecting Susceptibility to Intergranular Attack in Austenitic Stainless Steels*

1.3.5.4 API - American Petroleum Institute

- API STD 520 Part I – *Sizing and Selection* (2014), *Sizing , Selection and Installation of Pressure-relieving Devices in Refineries*
- API RP 520 Part II – *Installation* (2011), *Sizing, Selection and Installation of Relieving Devices in Refineries*
- API STD 521 (2014), *Pressure-Relieving and Depressuring Systems*
- API STD 526 (2009), *Flanged Steel Pressure Relief Valves*
- API STD 527 (2014), *Seat Tightness of Pressure Relief Valves*
- API STD 598 (2009), *Valve Inspection and Testing*

1.3.5.5 AWS – American Welding Society

- AWS A4.2 (2006), *Standard Procedures for Calibrating Magnetic Instruments to Measure the Delta Ferrite Content of Austenitic and Duplex Ferritic-Austenitic Stainless Steel Weld Metal*

1.3.5.6 FCI - Fluid Controls Institute, Inc.

- FCI 70-2 (2013), *Control Valve Seat Leakage*
- FCI 70-3 (2014), *Regulator Seat Leakage*

1.3.5.7 IEC – International Electrotechnical Commission

- IEC 61508 (2010), *Functional Safety of Electrical/Electronic/ Programmable Electronic Safety-Related Systems*

1.3.5.8 IEEE – Institute of Electrical and Electronics Engineers

- IEEE 344 (2013), Standard for Seismic Qualification of Equipment for Nuclear Power Generating Stations
- IEEE 383 (2008), *Standard for Type Test for Qualifying Electric Cables and Splices for Nuclear Facility*
- IEEE 384 (2008), *Standard Criteria for Independence of Class 1E Equipment and Circuits*

1.3.5.9 ISA – The International Society of Automation

- ISA 5.1 (2009), *Instrumentation Symbols and Identification*
- ISA 12.10 (1988), *Area Classification in Hazardous (Classified) Dust Locations*

- ISA 12.12.01 (2013), *Nonincendive Electrical Equipment for Use in Class I and II, Division 2 and Class III, Division 1 and 2 Hazardous (Classified) Locations*
- ISA 20, (1981), Specification Forms for Process Measurement and Control Instruments, Primary Elements and Control Valves
- ISA 75.01.01 (2012), *Industrial-Process Control Valves – Part 2-1: Flow Capacity – Sizing Equations for Fluid Flow Under Installed Conditions*
- ISA 75.17 (1989), *Control Valve Aerodynamic Noise Prediction*
- ANSI/ISA 84,00.01 Part 1 (IEC 61511-1 Mod) (2004), *Functional Safety: Safety Instrumented Systems for the Process Industry Sector*

1.3.5.10 ISO/IEC – International Organization for Standardization / International Electrotechnical Commission

- ISO/IEC 17025 (2005), *General Requirements for the Competence of Testing and Calibration Laboratories*

1.3.5.11 NCSL – National Conference of Standards Laboratories

- NCSL Z540-3 (2006), *Requirements for the Calibration of Measuring and Test Equipment*

1.3.5.12 NEMA – National Electrical Manufacturers Association

- NEMA ICS 1 (2000), (reaffirmed 2010), *Industrial Control and Systems: General Requirements*
- NEMA ICS 6 (1993), (reaffirmed 2011), *Industrial Controls and Systems: Enclosures*
- NEMA 250 2014, Enclosures for Electrical Equipment (1000 Volts Maximum)

1.3.5.13 NFPA – National Fire Protection Association

- NFPA 70 (2014), *National Electric Code*

1.3.5.14 UL – Underwriters Laboratories

- UL-1581 (2001), *Standard for Safety Reference Standard for Electrical Wires, Cables, and Flexible Cords*
- UL-44 (2014), *Rubber and Insulated Wires and Cables*

1.3.6 Non-Code of Record Documents/Related Documents/Drawings

See Section 1.2, Related Sections.

1.4 System Description

1.4.1 Description

The devices that fall under the scope of supply of this specification are as follows:

1.4.1.1 The valves described in this document are for the process control of radioactive fluids, process services, pressure containment and pressure relief by modulating or on/off means. Each valve is identified with a tag number and associated with a corresponding data

sheet. The process conditions and physical characteristics for each valve are identified on its respective data sheet as listed in Appendix A, Valve Data Sheet List.

1.4.1.2 All accessories, materials, and methods of fabrication not specifically addressed in this Specification, but which are necessary to provide complete valve assembly as defined on the valve data sheets. This selection shall be carried out in accordance with good engineering practices subject to written approval by the BUYER.

1.5 Submittals

Submittals that are listed within this section shall be prepared and processed in accordance with requirements of CSI Section 01 33 00, "Submittals," and shall include all of the required Quality Assurance documentation in accordance with CSI Section 01 40 00, "Quality Assurance," of this specification.

1.5.1 Technical Submittals include:

1.5.1.1 List of Fabrication Codes and Standards including Revision and/or Issue Date.

1.5.1.2 VENDOR Proposal Package, as identified in CSI Section 01 33 00 "Submittals."

A. Project Schedule

B. Drawing List

C. Quality Assurance Program Manual

D. Manufacturer's Cut Sheets

E. Valve List

F. General Arrangements

G. Marked-up BUYER's Data Sheet Indicating Changes and/or Additions.

H. SIS Safety Manual and Diagnostic Data (reference Section 2.3.2) (where applicable)

1.5.1.3 Request for Information (RFI), shall be submitted on BUYER supplied form A-6003-417.

1.5.1.4 Nonconformance Reports/Deficiency Reports shall be approved, in accordance with QA Clause B22.

1.5.1.5 Final Design Review Package per 1.5.6. BUYER approval required prior to release for shipment.

1.5.1.6 Final Lifetime Records per Section 1.5.7.

1.5.2 Instrumentation and controls drawing symbols, legend, and terminology shall comply with guidelines of ISA-5.1 and ISA-51.1.

1.5.3 Drawings should be prepared in accordance with BUYER procedures.

1.5.4 All assemblies shall be identified by a part number/model number, in accordance with QA Clause B32.

1.5.5 The following final design review package documents shall be submitted for Review and Approval prior to releasing the equipment for fabrication.

1.5.5.1 Quality Assurance Program Manual per NQA-1-2008/2009 Addendum

A. Suspect/Counterfeit Items Program per DOE O 414.1D, Attachment 3. Submit certification against the procurement of potentially suspect or counterfeit items (i.e., all supplied materials shall be genuine, new, and unused), in accordance with QA Clause B76.

1.5.5.2 For Safety (FQA) items, the VENDOR shall meet the requirements of the BUYER's Commercial Grade Dedication (CGD) plan.

1.5.5.3 Calculations

A. Seismic criteria compliance per Section 1.8.1.3 and 1.8.1.4.
   i. Seismic criteria compliance shall have calculation support documentation per Section 1.5.5.4.
B. Valve sizing to include sound pressure level (SPL)
   i. Pressure Relief Valve sizing shall have calculation support documentation per Section 1.5.5.4.

1.5.5.4 Calculation Support Documentation

A. Commercial-off-the-shelf (COTS) software used for engineering analysis or engineering/environmental modeling shall have support documentation provided in accordance with QA Clause B15.
B. Spreadsheet calculations using COTS software shall have support documentation provided in accordance with QA Clause B18.

1.5.5.5 Fabrication/Inspection/Test Plan in accordance with QA Clause B13.

A. The VENDOR as a minimum shall incorporate BUYER's QA Inspection Plan (QAIP) inspections and reviews into VENDOR's Inspection and Test Plan.
B. The VENDOR's Fabrication/Inspection/Test Plan shall describe the inspections and/or tests to be performed, delineate VENDOR Hold and Witness points and allow for inclusion of BUYER Hold and Witness points.
C. This plan shall include lower tier VENDORs and subcontractor's names and locations where fabrication, inspection, installation and testing will be performed.
D. The VENDOR's Inspection and Test Plan shall incorporate all inspections requirements of the BUYER's Commercial Grade Dedication (CGD) plan.
E. Test Plan shall include functional testing of the actuator and valve assembly to required line pressures with closure time required by the valve data sheet.

1.5.5.6 Valve Data Sheets

A. Manufacturer data sheets for the following but not limited to:
   - Valve body and bonnet
   - Gaskets and seals
   - Actuator
   - Positioner
   - Limit switches
   - Solenoid valves
   - All adapters and accessories

B. Data Sheets shall be supplied in accordance with QA Clause B33.

1.5.5.7 Drawings

A. Dimensioned general arrangement (GA) drawings drawn to scale.
B. Assembly Drawings: Fabrication level assembly drawings showing all components and actuator removal clearances.
C. Pneumatic schematic to show configuration of the valve assemblies with all major components identified.
D. Wiring termination documentation shall include but are not limited to, detail electrical schematics, electrical wiring diagrams, termination schedules, and supplied cable details.

1.5.5.8 Procedures and Qualifications

A. Weld Procedure Specifications and Weld Procedure Qualification Records shall be provided for all welds that are performed on process containment components, in accordance with QA Clause B28.
B. Welder Qualification Records shall be provided for personnel that perform project work, in accordance with QA Clause B28.
C. American Welding Society Certified Welding Inspector (CWI) Qualifications Records will be provided for personnel that perform project work, in accordance with QA Clause B25.
D. Nondestructive Examination (NDE) Procedures will be provided, in accordance with QA Clause B31.
E. NDE Personnel Qualification Records will be provided for personnel that perform project work, in accordance with QA Clause B31.
F. Records of Annual Visual Acuity Examinations for all ASME B31.3, weld and NDE examination personnel.
G. Material Control Procedures shall be provided to ensure prevention of component material and weld rods/fillers contamination, particularly stainless steel cross contamination with carbon steel and halogens.

1.5.5.9 Certified Electrical Inspector Qualifications Records - where data sheets specify critical characteristic: valve components and devices provided to IEC 61508, Certified Electrical Inspector Qualifications Records will be provided for personnel that perform project work, in accordance with QA Clause B17.

1.5.5.10 Failure Modes, Effects, and Diagnostics Analysis (FMEDA) documentation (where required).

1.5.5.11 Calibration certificates for VENDOR owned instruments and measurement equipment used during testing shall be submitted in accordance with QA Clause B12.

1.5.6 Delivery Storage and Handling

1.5.6.1 Packaging, Storage, Shipping & Handling (PSSH) Plan, in accordance with QA Clause B85.

1.5.6.2 Site Assembly Instructions for each device.

1.5.6.3 Cleaning Plan

1.5.7 Final Lifetime Records

The VENDOR shall prepare documentation for Final Data Package for each item. Documents will be submitted and approved prior to final acceptance of the equipment. Documents shall include:

1.5.7.1 Certificates of Conformance (CoCs) & Signature Verification Sheets

A. To demonstrate compliance with the Codes and Standards, VENDOR shall ensure that these products are supplied with a Certificate of Conformance, in accordance with QA Clause B79.
B. Certificate of Conformance shall certify that valves are new and not used, and comply with the requirements herein. Certificate of Conformance shall also certify the manufacturing standard that applies to the valves and the CoC references the corresponding purchase order.
C. Certificate of Conformance shall be provided confirming device firmware/software to FMEDA (reference Section 1.5.7.4.E) (where applicable).

1.5.7.2 Certified Material Test Reports (CMTRs)

A. CMTRs shall be supplied in accordance with QA Clause B49.
B. Instrument components and accessories (e.g. flanges) that provide for process containment shall be supplied with CMTRs.
C. Process Air and Instrument Air service valves do not require CMTRs.
D. Filler Material, weld wire and electrode CMTRs for all welds performed on process containment components.

1.5.7.3 Weld Documentation

A. Weld maps.
B. Weld Inspection Reports: All welds that are performed on process containment components shall be 100% visual examination per ASME B31.3.
   i. For pressure relief valves, process containment is defined to include the discharge components of the valve as well as the inlet and seat components.
C. Weld History Reports: All welds that are performed on process containment components shall have weld history maintained and logged.

D. Nondestructive Inspection Reports, in accordance with QA Clause B31 and Section 2.6.1.4.
E. Liquid Penetrant Material Certification, in accordance with QA Clause B46 and Section 2.6.1.4.

1.5.7.4 Certificates and Reports

A. Calibration Certificates shall be submitted for supplied instrumentation in accordance with QA Clause B61.
B. Calibration documentation indicating instrument and/or control device calibrated, setpoints, calibration results (including "As Found," and "As Left" data), test curves, test reports, and calibration technicians initials, and date of calibration.
C. Pressure Test Reports, in accordance with QA Clause B52. Reports shall include as a minimum design pressure or working pressure, full test pressure, hold times, halogen content of water used in testing, temperature of water during the test, and pressure gauge range.
D. Final Inspection Reports, in accordance with QA Clause B52.
E. FMEDAs are to be supplied as part of this section.
F. Flame test reports for insulated wiring (if applicable per Section 2.5.6), in accordance with QA Clause B55.
G. Seismic test reports (if applicable) in accordance with QA Clause B52.
H. Electrical components shall be listed by a Nationally Recognized Testing Laboratory (NRTL) and labeled accordingly, in accordance with QA Clause B65.
I. Calibration certificates for VENDOR owned instruments and measurement equipment used during testing shall be submitted in accordance with QA Clause B12.

1.5.7.5 Nonconformance Reports, in accordance with QA Clause B22.

1.5.7.6 Manufacturers/VENDORS Data

A. Datasheets on all instruments shall be supplied, in accordance with QA Clause B33.
B. Safety Data Sheets (SDS) shall be provided where available. SDSs shall be compliant to OSHA 29 CFR 1910 requirements.
C. Installation and instruction manuals for all instruments and accessories including but not limited to: operation, installation and maintenance.
D. Recommended spare parts list shall be provided, in accordance with QA Clause B82.
E. Safety manuals for all instruments, components and accessories that can affect safety function of valves designated as SS on data sheets.

1.5.7.7 Calculations (reference Section 1.5.5.3)

1.5.7.8 As Built Drawings

A. Provide block diagrams and engineering drawings. Drawings shall delineate instruments, equipment panels and contain complete parts lists with VENDOR's part number, quantities and material descriptions.

B. Provide final pneumatic schematic drawings per valve assembly.
C. Wiring diagrams showing cables, wiring, and wiring terminations.
D. Diagrams shall show operation of equipment/systems in enough detail to provide clear understanding and permit troubleshooting of installation.
E. Designate field installed wires with numbers or letter and retain same designation throughout, independent of splices at terminal blocks.
F. All drawings shall be submitted in native and Portable Document Format (PDF).

1.6 Delivery, Storage & Handling

1.6.1 After acceptance of shop test by BUYER, VENDOR shall disconnect all equipment and prepare the items for shipment per CSI Section 01 66 00, "Delivery Storage and Handling," as appropriate to satisfy Level C protection at a minimum.

1.6.2 VENDOR shall submit a PSSH Plan per Section 1.5.6.

1.6.3 Each valve shall be labelled per CSI Section 01 60 00, "Labeling."

1.6.4 Weld preps and flange faces shall be protected with covers that will prevent damage during shipment, storage and handling.

1.6.5 Classification of items and packaging will follow the guidelines of ASME NQA-1.

1.6.5.1 Safety rated (FQA) valves, as designated on data sheets, shall be classified as Level B Items.

1.6.5.2 Non-SS rated valves shall be classified as Level C Items.

1.6.6 Covers shall be either wood or plastic bolted, snapped or wired on covers. Self-fastening plastic covers are acceptable. Covers or caps containing fluorides, chlorides, sulfur, lead, zinc, copper and mercury are not allowed on stainless steel ends.

1.6.7 Valves shall be supported with cribbing as necessary to comply with CSI Section 01 66 00, "Delivery Storage and Handling," requirements for shipping.

1.6.8 Valves shall be covered during shipping as specified by CSI Section 01 66 00, "Delivery Storage and Handling."

1.6.9 Each valve assembly shall be completely drained of all liquid prior to shipment. VENDOR shall be responsible for all valve damage which occurs as a result of improper drainage.

1.6.10 VENDOR shall be responsible for ensuring that no physical damage to equipment occurs during transit to the plant and field sites.

1.6.11 Each valve assembly including actuator and all accessories shall be kept as a matched set during shipment and delivery. Loose components shall be securely attached to the valve or be shipped separately in a box.

1.6.12 VENDOR shall advise on requirements for storage of equipment at site prior to installation.

1.6.13 VENDOR shall provide installation instructions per Section 1.5.7.6, Manufacturers/VENDORS Data.

1.7 Quality Assurance

1.7.1 Refer to CSI Section 01 40 00, "Quality Assurance," for Quality Assurance requirements.

1.7.2 The verification points, required by Table 1.7-1, shall be in accordance with CSI Section 01 40 00, "Quality Assurance," and verified by the BUYER, as applicable.

1.7.3 The VENDOR shall implement and maintain a quality system, in accordance with the applicable elements of ASME NQA-1 2008/2009A.

1.7.4 The VENDOR shall implement and maintain a calibration system, in accordance with ISO/IEC 17025:2005, General requirements for the competence of testing and calibration laboratories; or as an alternative, a calibration system that complies with NCSL Z540-3, Requirements for the Calibration of Measuring and Test Equipment. The contractor may accept accreditation of the VENDOR's calibration system if the identified accredited body is recognized by either the National Cooperation for Laboratory Accreditation (NACLA) or the International Laboratory Accreditation Cooperation (ILAC) in lieu of Contractor review and approval. Vendor shall retain copies of ISO 17025, NACLA, and/or ILAC certification documentation.

1.7.5 VENDOR shall allow BUYER or BUYER's representative access to their and / or any lower tier supplier's facility and records pertaining to this procurement for the purpose of Quality Assurance Audits and surveillance at mutually agreed times. Source inspections will be performed in accordance with QA Clause B16.

1.7.6 VENDOR labor shall be appropriately qualified for tasks by education, experience, and certifications.

1.7.7 Upon completion, VENDOR shall provide as electronic files all documents/information as detailed in CSI Section 01 33 00, "Submittals."

1.7.8 Unless otherwise specified, items required by the Purchase Order shall be procured directly from the original manufacturer or an authorized master distributor. Items delivered under this Purchase Order will be inspected by the BUYER for indications of suspect or counterfeit or fraudulent conditions. Detection by the BUYER of any suspect or counterfeit item leading to evidence of deliberate misrepresentation of any supplied item may result in an investigation into the validity of certification, fraud, and/or forgery. Reference DOE Order 414.1D, Attachment 3, Suspect/Counterfeit Items Prevention.

1.7.9 The following verification points required by this section shall be in accordance with CSI Section 01 40 00, "Quality Assurance," verified by the BUYER, as applicable.

1.7.9.1 At a minimum, the following witness and hold points for instrumentation and controls shall apply:

Table 1.7-1 Hold and Witness Point Verification

Verification Point Description	Type of Verification
Prior to Fabrication	Hold
Prior to Testing	Witness
Prior to Seismic Testing	Hold
Prior to Inspections	Witness
Prior to Acceptance Testing	Hold
Prior to Shipping	Hold

1.7.10 The VENDOR shall provide required notifications of verification points, in accordance with CSI Section 01 40 00, "Quality Assurance," as applicable, and shall not proceed past required hold points without written authorization from the BUYER QA representative.

1.7.11 The full QA Clause definition and associate requirements are located in CSI Section 01 40 00, "Quality Assurance."

1.7.12 Applicable QA Clauses are summarized in the table below. The full QA Clause definition and associate requirements are located in CSI Section 01 40 00, "Quality Assurance."

Table 1.7-2 Procurement Quality Clause

SUPPLIER FABRICATION
B12 Supplier Use of Calibrated Equipment
B13 Fabrication/Inspection/Test Plan
B15 Supplier Use of Commercial off the Shelf Software
B16 Source Inspection
B17 Certified Electrical Inspector (Non-NEC-IAEI)
B18 Supplier Use of Spreadsheet Calculations Using Commercial off the Shelf Software
B22 Nonconformance Documentation and Reporting
B25 Certified Weld Inspector (CWI)
B28 Welding Procedures and Qualifications
B31 Nondestructive Examination Process
MATERIAL IDENTIFICATION
B32 Identification of Items with Part Number/Model Number

SUPPLIER FABRICATION
B33 Identification of Items with Product Data Sheet
TESTING AND TEST DATA
B37 Identification and Traceability of Items
B46 Liquid Penetrant Material Certification
B49 Certified Material Test Report
B52 Inspection and Test Report
B55 Flame Test Report
B61 Certification of Calibration
B65 Nationally Recognized Testing Laboratory (NRTL) Listed or Labeled
INSPECTION AND ACCEPTANCE CRITERIA
B76 Procurement of Potentially Suspect or Counterfeit Items
B79 Certificate of Conformance
B82 Recommended Spare Parts Listing
MATERIAL HANDLING
B85 Packaging/Shipping Procedures

1.7.13 All materials and items used in the construction of the valves shall be identified and traceable, in accordance with QA clauses B32 and B37.

1.8 Site Conditions

1.8.1 Valve data sheets shall specify ambient conditions for valve locations. VENDOR's equipment shall be suitable for operation in the conditions of service as stated below:

1.8.1.1 The LAWPS site design site conditions are as follows:

- Outdoor temperature: -25°F to 115°F
- Outdoor relative humidity: 0 – 100%
- Barometric pressure: 14.35 psia (measured at a meteorological tower 733 feet above sea level)

1.8.1.2 The LAWPS site indoor conditions are to be maintained as follows:

- Normal Operational Indoor temperature: 60°F to 120°F +/-10°F
- Off-Normal Indoor temperature: 20°F to 140°F
- Normal Operational Indoor relative humidity: 5% to 70% RH @ Normal Operational Indoor Temperature Above

- Off-Normal Indoor relative humidity: 5% to 100% RH @ Off-Normal Indoor Temperature Above

1.8.1.3 For valves designated as SS for Confinement (Conf_SS) or SS on data sheets, Seismic service shall be to CSI Section 01 81 02, "Safety Natural Phenomena Hazard Performance Requirements."

A. Valves and valve accessories shall at a minimum meet data sheet specified SDC (seismic design criteria) and limit state requirements; see Section 3.5.5, Seismic Testing.
B. All valve assemblies that are designated as Limit State D on the valve data sheets shall be qualified by seismic testing.

1.8.1.4 For valves designated as EQA with seismic design criteria on data sheets, seismic service shall be to CSI Section 01 81 01, "General Service Natural Phenomena Hazard Performance Requirements."

A. Valves and valve accessories shall meet data sheet specified SDC and limit state requirements at a minimum.
B. Valves and valve accessories shall be qualified by calculation/analysis see Section 1.5.5.3, or Seismic Testing, see Section 3.5.5.

2.0 PART 2 – PRODUCTS

2.1 Manufacturers

2.1.1 Sub-contracting to other manufacturers is to be in accordance with the procurement package.

2.1.2 Materials which are specified by manufacturer and/or proprietary name on instrument data sheets are so specified only for the purpose of establishing the type and standard of quality required. The manufacturer and/or proprietary names do not preclude the use of BUYER-approved substitutes. Where names of manufacturers are listed, the order of listing is not indicative of an order of preference. All substitutions shall be accompanied with manufacturer's catalog data.

2.2 Material

2.2.1 Certified Material Test Reports (CMTRs) and chemical analysis data are also required for thermoplastic materials used in valve construction that contribute to maintaining confinement and shall be supplied in accordance with QA Clause B49.

2.2.2 All valves and accessories shall conform to the applicable valve data sheet and any additional requirements of this specification.

2.2.3 All products shall be new and unused. Items not specified herein or on the drawings shall be new and of the highest quality of their respective kinds.

2.2.4 No item shall contain any asbestos materials (e.g., bonnet gaskets, stem packing, etc.) or incompatible materials subject to radiation degradation, see Section 2.3.1.9.

2.2.5 The use of non-combustible and limited-combustible materials is required to the fullest extent possible. Where there is an opportunity to choose between readily available materials, non-combustible and limited-combustible materials shall be selected.

2.2.6 VENDOR shall standardize on components used to the greatest extent possible.

2.2.7 Marking materials and liquid penetrant materials used on austenitic stainless steels and nickel base alloys shall not cause corrosive or other harmful effects.

2.3 Equipment

2.3.1 General Requirements

2.3.1.1 All valves shall be designed, fabricated and tested in accordance with ASME B16.34.

2.3.1.2 All valves and valve accessories shall be suitable for continuous operation under the design environmental conditions and area classification.

2.3.1.3 Location of all valve assemblies shall be planned for accessibility and removal. The valve assembly shall be designed and arranged so it can be adequately inspected, tested, and maintained.

2.3.1.4 All valve assemblies shall be calibrated before shipment. A calibration sticker shall be attached to each valve assembly with the technician's initials and date of calibration. Calibration Stickers should be traceable to the instrument, instrument serial number and certificate of calibration.

2.3.1.5 The sizing and selection of valves and the method of fabrication shall be the responsibility of the VENDOR and shall be carried out in accordance with referenced specifications, data sheets and good engineering practices.

2.3.1.6 All equipment shall meet the area classification stated on referenced data sheet.

2.3.1.7 Valve materials shall comply with the material specified on each valve's respective data sheet, and at a minimum shall comply with CSI Section 40 05 00 11, "Piping Materials Specification." All valve materials shall be suitable for the maximum and minimum design pressure and temperature as stated on the valve data sheet.

2.3.1.8 Valve end connections shall meet the requirements in CSI Section 40 05 00, "Piping, Fitting and Flanges."

2.3.1.9 Valve data sheets will specify local ionizing radiation levels over the required lifetime of the product. Materials and electronics shall be provided to withstand these required levels.

2.3.1.10 Data sheets provide preliminary sizing and selection information. VENDOR shall perform final sizing and selection.

2.3.1.11 All actuated valves shall be furnished with an adjustable air filter/regulator combination. The assembly shall have an integrally mounted metal case output gauge and shall use 316 stainless steel or better tubing and fittings between instruments and filter/regulator.

2.3.1.12 Welds that provide process containment or that include components that provide process containment shall be provided with certifications per CSI Section 40 05 05 33, "Pipe Welding." These certifications shall include but are not limited to the following:

- Filler Material, weld wire and electrode CMTRs
- Welder qualifications
- Weld procedures and/or specification
- Weld examination inspection records
- NDE Test Reports
- Records of Annual Visual Acuity Examinations
- Quality control inspector certification/qualification records

2.3.1.13 Analog control instrumentation that interfaces with the main plant control equipment shall use isolated 4-20 mA 24VDC.

2.3.1.14 CQA devices shall be provided with the following Final Lifetime Records submittals as a minimum:

A. CoCs in accordance with Section 1.5.7.1
B. Certificates of Calibration in accordance with Sections 1.5.7.4.A and 1.5.7.4.B
C. Data Sheets, Drawings and Manufacturers/VENDORS data in accordance with Sections 1.5.5.6, 1.5.5.7 and 1.5.7.6
D. Calculations in accordance with Sections 1.5.5.3 and 1.5.7.7
E. Reports in accordance with Section 1.5.7.4.H

2.3.1.15 EQA devices shall be provided with the following Final Lifetime Records submittals as a minimum:

A. CoCs in accordance with Section 1.5.7.1
B. Certificates of Calibration in accordance with Sections 1.5.7.4.A, 1.5.7.4.B and 1.5.7.4.I
C. Data Sheets, Drawings and Manufacturers/VENDORS data in accordance with Sections 1.5.5.6, 1.5.5.7 and 1.5.7.6
D. Calculations in accordance with Sections 1.5.5.3 and 1.5.7.7
E. Reports in accordance with Sections 1.5.7.4.D, 1.5.7.4.G (if applicable) and 1.5.7.4.H
F. Where devices are designated with critical characteristic: provide containment, the following additional submittals shall be provided:

   i. Welding Procedures, Qualifications and Documentation in accordance with Sections 1.5.5.8 and 1.5.7.3.
   ii. CMTRs in accordance with Section 1.5.7.2.
   iii. Reports in accordance with Section 1.5.7.4.C and 1.5.7.4.G (if applicable)

2.3.1.16 FQA devices shall be provided with the following Final Lifetime Records submittals as a minimum:

A. CoCs in accordance with Section 1.5.7.1
B. Certificates of Calibration in accordance with Sections 1.5.7.4.A, 1.5.7.4.B and 1.5.7.4.I
C. Data Sheets, Drawings and Manufacturers/VENDORS data in accordance with Sections 1.5.5.6, 1.5.5.7 and 1.5.7.6
D. Calculations in accordance with Sections 1.5.5.3 and 1.5.7.7
E. Reports in accordance with Sections 1.5.7.4.D, 1.5.7.4.G and 1.5.7.4.H
F. Where devices are designated with critical characteristic: provide containment, the following additional submittals shall be provided:

   i. Welding Procedures, Qualifications and Documentation in accordance with Sections 1.5.5.8 and 1.5.7.3
   ii. CMTRs in accordance with Section 1.5.7.2.
   iii. Reports in accordance with Section 1.5.7.4.C

G. Where devices are designated with critical characteristic: valve components, the following additional submittals shall be provided:

i. Where devices provided to IEC 61508, Certified Electrical Inspector Qualifications Records in accordance with Sections 1.5.5.9
ii. Where devices provided to IEC 61508, reports in accordance with Sections 1.5.5.10 and 1.5.7.4.E.
iii. Where devices provided to IEC 61508 and instrumentation and controls components seismic criteria provided, report in accordance with Section 1.5.7.4.G.
iv. Where IEEE 383 compliant wiring specified, report in accordance with Section 1.5.7.4.F
v. Where devices provided to IEC 61508, CoCs in accordance with Section 1.5.7.1.C

2.3.2 SS designated valve assemblies with critical characteristic: valve components shall have designated components certified to IEC 61508, Functional Safety of Electrical/Electronic/ Programmable Electronic Safety Related Systems.

2.3.2.1 FMEDA certification shall be provided by a certified third party laboratory.

2.3.2.2 Valve and valve accessories, at a minimum, shall meet the Safety Integrity Level (SIL) specified on the valve data sheet.

2.3.2.3 Diagnostics

A. Instrumentation shall have diagnostic coverage to IEC 61508 requirements.
B. BUYER shall supply diagnostic coverage data. This shall include but not be limited to:
- List of Detectable Faults
- Diagnostic Coverage Ratio

2.3.3 For FQA designated valves with critical characteristic: provide containment the following shall apply:

2.3.3.1 Material shall exhibit no chromium carbides or detrimental intermetallic phases as demonstrated by testing and accepting a minimum of one specimen per heat treatment lot, in accordance with ASTM A262, Practice A.

2.3.3.2 All materials and items used in the construction of the valves shall be identified and traceable per Section 1.7.13.

2.3.4 Electrical Requirements

2.3.4.1 The assemblies shall meet the area electrical classification stated on the Equipment Data Sheets.

2.3.4.2 All electrical designs shall comply with NFPA 70, National Electrical Code (NEC), and Washington Administrative Code (WAC) requirements. WAC requirements include but are not limited to the following: 296-46B-010, 296-46B-903, 296-46B-997 and 296-46B-999.

2.3.4.3 All system grounds shall comply with the National Electric Code (NFPA 70) requirements.

2.3.4.4 Where SS designated valves with critical characteristic: valve components provide for both SS and non-SS circuits, IEEE 384 Standard Criteria for Independence of Class 1E Equipment and Circuits separation shall be applied as provided in Section 2.5.9.

2.3.5 Identification and Marking

2.3.5.1 Valves and valve accessories shall be permanently labelled with identification numbers, in accordance with tags identified in data sheets and drawings.

2.3.5.2 Wire identification: VENDOR shall clearly and permanently label internal panel wiring as shown on VENDOR's termination wiring diagrams.

2.3.5.3 Each instrument shall have a stainless steel nameplate attached. Nameplates shall include at least the manufacturer's name, figure number, serial number and size.

2.3.5.4 All valves and valve accessory labels shall be provided and affixed to instrument, in accordance with CSI Section 01 60 00, "Labeling."

2.3.5.5 VENDOR shall designate wires with numbers or letters and retain same designation throughout, independent of splices at terminal blocks.

2.3.6 Maintainability

2.3.6.1 Equipment shall have access covers where replacement of parts or component maintenance is necessary.

2.3.6.2 The design shall incorporate installed test connections, jacks and plugs for testing and calibration.

2.3.7 Critical Characteristics

2.3.7.1 Component critical characteristics of performance are stated on respective data sheets with associated required documentation.

2.3.8 Security

2.3.8.1 Positioners and other programmable devices provided as part of SS rated valves shall be provided with security features to meet ISA 84, Functional Safety: Safety Instrumented Systems for the Process Industry Sector, Clause 11, Section 11.6.4 to prevent inadvertent modifications. These features may include but are not limited to:

- Security switches or jumpers
- Software/Firmware lockout or password protection
- Removal or deactivation of configuration buttons.

2.4 Components

2.4.1 On/Off Valves

2.4.1.1 Minimum valve leakage class rating shall be Class IV for on/off valves per ANSI/FCI 70-2 unless specified otherwise on the valve data sheet.

2.4.1.2 Valves shall be designed to fail to data sheet designated safe position upon loss of air.

2.4.1.3 Spring opposed pneumatic actuators shall be used for 'Fail Open' or 'Fail Closed' applications and 'Fail Last' applications shall use a trip valve to lock valve in its last position.

2.4.1.4 Pneumatic actuators shall be sized for the required torque to operate against the maximum shutoff pressure and shall be capable of fully opening and fully closing the valve using a minimum air supply pressure as stated on the valve's data sheet. The actuator shall be capable of maintaining the fail-safe position using only the actuator spring. It is not the intent that valves be able to open against full shutoff differential pressure under the low pressure condition. However, it is the intent that the valves can be maintained in their non-failure state under the low pressure condition.

2.4.1.5 Valves that specify limit switches on the datasheet shall be provided with open/closed position switches wired to an enclosure mounted to the top of the actuator.

2.4.1.6 VENDOR shall provide all accessories as stated on valve data sheet or provide alternate accessories with BUYER's approval.

2.4.1.7 Low wattage, 24 VDC solenoid pilot valves shall be provided unless noted otherwise on the valve data sheet. The solenoid pilot valve vent shall be furnished with a bug-proof fitting.

2.4.1.8 Each valve and associated actuator accessories shall be mounted on the valve assembly and be completely assembled, piped and wired.

2.4.1.9 Where designated on data sheets, valve positioners shall be required. Refer to 2.4.2.11.B for requirements.

2.4.1.10 Valve opening and closing cycle times shall be provided to support the BUYER's hydraulic analysis as indicated in the datasheet notes as "Data to be provided by VENDOR."

2.4.1.11 Where specified on datasheets, lockable needle valves shall be provided to adjust the valve closure speed.

2.4.2 Modulating Control Valves

2.4.2.1 Each control valve shall be selected for body design, trim and size on an individual basis. Valve flow characteristics (e.g. equal percentage, linear, quick opening) shall be suitable for the process conditions.

2.4.2.2 Control valves shall generally be globe type single or double port design. Angle valves, butterfly valves, gate valves, gage guide type or characterized ball valves may be used if required by service conditions. Butterfly valves shall be high performance type if used.

Control valves shall be selected to minimize the variety and types for purchasing and spare parts stocking.

2.4.2.3 Minimum valve leakage class rating shall be Class IV for all valves per ANSI/FCI 70-2 unless specified otherwise on the valve data sheet.

2.4.2.4 Each valve and actuator accessories shall be mounted on the valve assembly and be completely assembled, piped and wired.

2.4.2.5 Sound pressure level produced by the control valves shall not exceed an overall 85 dBA as calculated per ISA 75.17. Where this SPL level is exceeded, the design of the trim shall maximize the noise attenuation within the valve body before considering the use of insulation, increased wall thickness, diffusers, silencers, etc.

2.4.2.6 Flow direction shall be permanently marked on the valve body.

2.4.2.7 The control valve body shall not exceed the line size. Standard body sizes shall be used; whenever non-standard sizes are required, reduced trim shall be used to allow installation of standard body sized valves. The valve body size shall not be more than two line sizes smaller than the process line size. Split body globe valves shall not be used.

2.4.2.8 Valve Trim

A. Temperature and flow control valves shall be furnished with equal percentage characteristics. Level and pressure control valves where the variation from maximum to minimum flow varies more than 10 to 1 and where maximum to minimum pressure drop varies more than 15 to 1 shall be furnished with equal percentage characteristics. All other valves in constant pressure drop services shall be linear characteristics.
B. Hardened reduced trim shall be used for valves in flashing services. Any valve that is in cavitating services shall not exhibit choked flow at any specified design condition. Plugging services may require other types of cavitation resistant control valves other than globe valves. Cage-guided trim valves shall only be used in clean liquid, vapor or gas services.
C. Globe valves shall be single seated unless otherwise required.

2.4.2.9 Sizing and Characteristics

A. Control valves shall be sized to handle pressure drops under start-up, upset, turndown or abnormal operating conditions. Control in the lower 10% and upper 10% of valve stroke shall be avoided. The valve control type shall be designated based on the control requirements.
B. Control valve shall be sized to operate between 50% and 70% of the valves capacity at normal flow rate, unless otherwise noted. Valve characteristics shall be selected based on process requirements.
C. Butterfly valve shall have a minimum opening angle of 10 degrees and a maximum opening angle of 60 degrees. High performance butterfly valves may be sized at 15 degrees minimum and 75 degrees maximum. High performance butterfly valves are preferred. A minimum of 150% shear safety factor at the specified shutoff pressure drop conditions shall be applied.

D. Valve sizing shall be in accordance with ISA 75.01.01, Flow Equations for Sizing Control Valves. The valve sizing coefficient (Cv) shall define the valve capacity at 100% valve travel.
E. Two phase fluids require special sizing considerations. The valve outlet should be no more than one size smaller than the downstream piping size. To minimize vibration, a minimum of 10 diameters of straight pipe shall be provided on the outlet of the valve and an expander shall be located on the outlet of the valve.

2.4.2.10 Actuators

A. Control valve actuators shall be pneumatic diaphragm or piston type except where hydraulic actuators are required due to force requirements.
B. In the event of fluid pressure failure or loss of signal, the actuator shall drive the valve to the safe position specified in the valve data sheet. The size of the actuator shall meet the control, shutoff, and leakage class requirements at the minimum air pressure supplied.
C. All actuator components, such as springs, internal parts, fasteners, and hardware shall be capable of withstanding the environmental conditions.

2.4.2.11 Accessories

A. Valve positioners are required on all control valves.
B. Valve positioners shall be loop powered, 4-20 mA (HART). Positioners shall be direct acting. Reverse acting valve positioners and reversing relays shall not be used.
C. Limit switches, where required, shall be proximity type with hermetically sealed contacts.
D. Solenoid pilot valves, where required, shall be low powered 24 VDC. Solenoid valve coils shall be rated for continuous duty.

2.4.3 Self-Contained Pressure Regulators

2.4.3.1 Each regulator shall be selected for body design, trim and size on an individual basis.

2.4.3.2 Pressure or temperature regulator valves shall be used only in low-pressure air, inert gas and water services.

2.4.3.3 Minimum valve leakage class rating shall be per ANSI/FCI 70-3 unless specified otherwise on the valve data sheet.

2.4.4 Pressure Relief Valves

2.4.4.1 Each relief valve shall be selected for body design, trim and size on an individual basis.

2.4.4.2 Except for thermal relief of liquids, general safety relief valves shall be direct-acting angle pattern, spring-loaded, full nozzle entry, adjustable blow-down, high capacity designs, in accordance with API RP/STD 520 Parts I and II, API STD 521, API STD 526, and applicable ASME boiler and pressure vessel codes. Special relief valves shall be applied where thermal expansion of liquids is expected.

2.4.4.3 Calculation sheets for proper sizing are outlined in API STD 520 Part I. The variation in superimposed back pressure shall not exceed 10% of the set pressure for conventional relief valve applications. Worst case scenario shall be used for valve sizing. Sizes shall be identified in accordance with API STD 526 showing inlet size, orifice area and outlet size.

2.4.4.4 Valves in hot water or air service shall be supplied with lifting levers. Lifting levers shall be packed if the valve vents into a closed system.

2.4.4.5 Process sensing lines shall be 1/2in NPS unless otherwise stated in the valve data sheet.

2.4.4.6 Pressure relief valves shall comply with API STD 527, Seat Tightness of Pressure Relief Valves, for seat tightness requirements unless specified otherwise on the valve data sheet.

2.5 Fabrication

2.5.1 Welding shall be performed in accordance to with ASME B31.3 and ASME B16.34 for valve body, bonnet and trim.

2.5.2 Defects in the body, bonnet, disk or plugs of a cast or forged carbon and alloy valves revealed by inspection, examination or test must be rejected. No repaired components shall be used in the fabrication of valves.

2.5.3 All terminal boxes shall conform to the electrical area classification.

2.5.4 ¾in NPT conduit connections are preferred for all instrument, terminal box and junction box electrical interfaces. ½in NPT is an accepted secondary preference.

2.5.5 Teflon tape shall not be used for instrument connections. Swagelok SWAK Anaerobic Thread Sealant or equivalent liquid thread dope, as approved by BUYER, shall be used instead.

2.5.6 All wiring and insulation within panels shall be flame resistant. Wiring insulation shall be capable of passing the flame test of UL 44, UL 1581, IEEE 383 or other BUYER approved flame test.

2.5.6.1 Valves designated as critical characteristic: valve components with IEEE 383 compliant wiring shall have flame test reports provided per Section 1.5.7.4.F.

2.5.7 Finishes

2.5.7.1 External paint color for all valve assemblies shall be VENDOR's standard.

2.5.7.2 All paint shall be suitable for the environment in which the valve assembly will be located

2.5.7.3 Paint shall be applied in strict compliance with the paint manufacturer's instructions.

2.5.7.4 Each steel alloy valve shall be painted in accordance with the VENDOR's standard practice. Nameplates, identification tags, machined mating surfaces and stainless steel material shall not be painted.

2.5.8 For SS designated valves with critical characteristic: provide containment the following shall apply:

2.5.8.1 Surfaces

A. Piping, plate, or bar surfaces providing process containment shall have a surface finish not exceeding 32 μ in (Ra), in accordance with ASME B46.1.
B. Castings and forgings:
   i. The external surface shall not exceed 125 μ in (Ra), in accordance with ASME B46.1
   ii. Castings and forgings shall be free of cracks, tears, or other linear defects.
C. Conditions not addressed by these criteria shall be documented with proposed disposition and submitted to the BUYER for approval prior to any rework.

2.5.8.2 Austenitic stainless steel (P-No. 8) welding materials for pressure boundary and load bearing welds shall contain a minimum delta ferrite content of five percent. The maximum ferrite content shall not exceed 12 % for post weld heat treatment (PWHT) applications. Compliance with the minimum and maximum ferrite requirements may be based upon the certified chemical analysis and the Welding Research Council (WRC) Delta Ferrite Diagram or a ferrite gage complying with American Welding Society (AWS) A4.2. Alternatively, for Shielded Metal Arc Welding (SMAW) electrodes and solid wire filler metal manufactured in the United States of America (USA), a CMTR may be used to confirm acceptability of the ferrite requirements.

2.5.9 Where SS designated valves with critical characteristic: valve components provide for both SS and non-SS circuits, IEEE 384 *Standard Criteria for Independence of Class 1E Equipment and Circuits* separation shall be applied as follows:

2.5.9.1 A separate junction box shall be provided for termination of safety rated solenoids and/or switches.

2.5.9.2 SS terminals and cable entries shall require physical separation spacing of 1In in the horizontal and 3In in the vertical from Non-SS terminals and cable entries.

2.5.9.3 Separate cable conduit entry shall be provided for SS and non-SS cables.

2.5.9.4 Vendor provided wiring shall maintain the separation distance stated in section 2.5.9.2 for any customized wiring provided to meet this specification and data sheet requirements. Note: This requirement does not apply to VENDOR standard wiring practices for their instruments.

2.5.9.5 Location of cable entries and terminals shall permit separation distance stated in section 2.5.9.2 to be maintained during field installation of Buyer cables and wires.

2.6 Shop Quality Control

2.6.1 Inspections

2.6.1.1 VENDOR shall submit a Fabrication/Inspection/Test Plan, in accordance with Section 1.5.5.3.

2.6.1.2 All NDE testing shall be performed in accordance with ASNT SNT-TC-1A.

2.6.1.3 VENDOR or lower tier suppliers shall be responsible for qualifying the welding procedures. All welder and weld inspector qualifications and welding and inspection procedures shall be current for the duration of the project work performed.

2.6.1.4 Weld inspections shall be in accordance with VENDOR/manufacturer's WPS/WQR and CSI Section 40 05 05 03, "Pipe Welding," with the following clarifications:

A. Welds to be examined include but are not limited to:
- End flange to body transition
- Body transition area to the bonnet
- Small integral nozzle/bleed connections
- Both ends of butt-welding end valves
- Welds of welded bonnets

2.6.1.5 Prior to any inspection and testing performed and/or witnessed by BUYER, VENDOR shall perform inspections and tests to ensure that the equipment meets specifications and is suitable for the intended service. VENDOR's own inspections shall be appropriate for the intended purpose and shall conform to good industry practices and to applicable regulations, codes and standards.

2.6.1.6 VENDOR shall document the inspections and shall maintain files of such information and make such files available to BUYER upon request.

2.6.1.7 All inspection and testing requirements will be in accordance with accepted codes and standards and approved test plans with BUYER's established hold/witness points as identified in the contract documents.

A. All test and inspections shall be traceable to the item inspected.
B. Inspections and tests shall be performed by certified / qualified personnel.
C. Calibrated measurement and test equipment shall be used to determine the acceptance of inspections and tests.

2.6.2 Shop Testing

2.6.2.1 Detailed requirements for shop testing are found in Section 3.5, Demonstration/Testing.

3.0 PART 3 – EXECUTION

3.1 Preparation

3.1.1 Not Used

3.2 Erection, Installation & Application

3.2.1 VENDOR to make provisions for technical query support during the site assembly installation, startup, and commissioning phases of the project.

3.3 Field Quality Control

3.3.1 Inspection

3.3.1.1 Detail equipment drawings and inspection records shall be made available for review and approval prior to testing of the equipment. A final equipment inspection and integrated field test shall be conducted.

3.3.1.2 Areas of inspection shall include verification of fabrication, assembly and testing in accordance with VENDOR's procedures.

3.3.1.3 BUYER reserves the right to inspect all phases of test phases.

3.4 Adjusting and Cleaning

3.4.1 VENDOR shall refer to CSI Section 01 66 00, "Delivery Storage and Handling," for cleaning requirements.

3.5 Demonstration/Testing

3.5.1 VENDOR shall submit a Fabrication/Inspection/Test Plan, in accordance with Section 1.5.5.3..

3.5.2 All defects in materials, wiring and assembly detected as a result of testing shall be repaired or replaced by the VENDOR at no additional cost to BUYER.

3.5.3 Completed Fabrication/Inspection/Test Plan, test procedures and test results shall be recorded and submitted to BUYER.

3.5.4 The VENDOR shall be responsible for performing and documenting all inspections and testing necessary to demonstrate compliance with all relevant specifications, drawings and related standards, as outlined in the Test Plan and procedures.

3.5.5 Seismic Testing

3.5.5.1 Valve assemblies for this test shall be furnished as functionally identical units to those delivered to BUYER for installation.

3.5.5.2 Testing shall be in accordance with CSI Section 01 81 02' "Safety Natural Phenomena Hazard Performance Requirements," data sheet designated seismic requirements and functional acceptance per Section 1.8.1.3, 1.8.1.4 and 3.5.5.3. Testing shall be conducted in accordance with IEEE 344, *Standard for Seismic Qualification of Equipment for Nuclear Power Generating Stations*.

3.5.5.3 For qualification activities, valves shall be considered QV Category A valves as defined in ASME QME-1.

A. All valves denoted as having seismic Limit State D shall be capable of operation before and after the data sheet specified seismic event (e.g. SDC-2, Limit State D).
B. Valves denoted as having seismic Limit State A, B or C shall either fail to data sheet specified safe state or be capable of operation after the specified seismic event.

3.5.6 As-Built Drawings

3.5.6.1 Any changes made during fabrication or testing shall be clearly identified (marked in red) on a full record set of contract drawings, and submitted to BUYER to document as-built conditions.

3.5.6.2 As-built mark-ups shall be incorporated into the as-built drawings which shall be submitted to BUYER for final approval prior to delivery.

3.5.6.2.1 A set of as-built drawings shall be included with the delivery of the equipment.

3.5.7 Pressure Testing

3.5.7.1 Each valve shall be hydrostatically shell and seat tested in accordance with the ASME B16.34, ANSI/FCI 70-2, ANSI/FCI 70-3 and API 598.

3.5.7.2 The water used for testing valves with stainless steel components shall not have a chloride content exceeding 50 ppm. VENDOR to supply certificate of analysis verifying the halogen content meets this requirement.

3.5.7.3 If a bypass is required, then the bypass shall be welded to the main valve and hydrostatically tested to prove that the piping and the bypass valve will withstand a pressure not less than 150% of the main valve's 100°F pressure rating.

3.5.7.4 The range of the pressure gauge shall not exceed minimum/maximum range as specified by the applicable code or standard.

3.5.8 Non-Destructive Examination

3.5.8.1 All castings shall be visually inspected on all accessible surfaces.

3.5.8.2 Non-destructive examination is required for each Safety Significant (SS) valve as indicated in the valve data sheet.

3.5.8.3 Verification of O-rings, gaskets and seals functionality according to the following acceptance criteria:

A. Material shall be confirmed per the call out of the applicable valve data sheet.
B. Material composition shall be established via chemical analysis per the call out on the applicable valve data sheet.
C. Surfaces shall be free from protruding foreign material and be free of surface defects as determined by visual examination.
D. Dimensional tolerances are compliant as specified in manufacturer's data or to tolerances on drawings for fabricated items. Where no manufacturer's data is available, the tolerance shall be as identified by the applicable dimensional standard.

3.5.8.4 Non-destructive personnel certifications shall be in accordance with ASNT SNT-TC-1A to Level II or Level III.

3.5.8.5 Vendor should have a certified Level III individual for interpretation of defects or for resolution of interpretations.

3.5.9 Electrical Testing and Inspection

3.5.9.1 VENDOR shall perform continuity test on all electrical circuits to verify all devices are installed and connected in accordance with drawings and/or specifications.

3.5.10 Final Inspection Report

The VENDOR shall prepare a final inspection report for each item which documents the result of the final inspection. This inspection shall include and confirm as minimum the following:

3.5.10.1 All inspection documentation identified in report is complete with all inspection signatures and is assembled as defined in CSI Section 01 33 00, "Submittals."

3.5.10.2 All critical dimensions and general dimension tolerances on VENDOR documents are achieved.

3.5.10.3 Overall visual inspection to cover any damage to vulnerable equipment items to include but not limited to instruments, electrical or instrument cable, small bore piping, and seals, etc.

3.5.10.4 Equipment orientation/configuration is correct.

3.5.10.5 Confirmation that all structural and equipment bolt tightening has been completed to specification.

3.5.10.6 Confirmation that all valves operate across full range of travel and to datasheet and specification requirements.

3.5.10.7 Confirmation that all remote and local control and feedback indications are provided to datasheet requirements.

3.5.10.8 Surface finish matches design documents and Section 2.5.8.1.

3.5.10.9 Labelling to include correct item identification and marking.

3.5.10.10 Any specific fabrication requirements defined on data sheets or associated fabrication specifications have been accounted for in the final fabrication.

3.5.10.11 All VENDOR issued as-built drawing data matches the final fabrication.

3.6 Protection

3.6.1 Not Used

4.0 LIST OF APPENDICES

4.1 Appendix A - Supporting Documentation Issued with this Specification

Appendix A – Supporting Documentation Issued with this Specification

Data sheets: As provided with the purchase order

SPECIFICATION

19-2-008-1

NON-SAFETY RATED INSTRUMENTS SPECIFICATION

AECOM ATKINS AREVA

LOW ACTIVITY WASTE PRETREATMENT SYSTEM

Project No. 31269 (T5L01)

Document No. 19-2-008-1

CSI Section 40 70 00 01

Safety Related ☐ Non-Safety Related ☒

NON-SAFETY RATED INSTRUMENTS SPECIFICATION

Prepared for

Washington River Protection Solutions, LLC

Revision: 0 Status: Final

HABIB TANIOS FEGHALI
STATE OF WASHINGTON
52852
REGISTERED
PROFESSIONAL ENGINEER

5/17/2017

FOR PERMITTING
HTF 5/17/2017

AECOM ATKINS AREVA

Project Number: 31269 (T5L01)
Doc. No.: 19-2-008-1
Date: May 17, 2017
Revision: 0

REVISION PAGE

Project Name:	LAWPS	**Discipline:**	19
Client:	Washington River Protection Solutions	**Project Number:**	31269 (T5L01)
		Latest Revision:	0

REVISION SIGNATURES

D. Horn Daniel Horn Digitally signed by Daniel Horn Date: 2017.05.15 07:12:46 -06'00'		H. Feghali Habib Feghali Digitally signed by Habib Feghali DN: cn=Habib Feghali, o=AECOM, ou=Management Services, email=habib.feghali@aecom.com, c=US Date: 2017.05.15 09:10:10 -06'00'	
Prepared by	**Date**	**Approved by (SDE/Lead)**	**Date**
J. Brinkley John Brinkley	Digitally signed by John Brinkley Date: 2017.05.15 08:33:52 -06'00'	P. Bell Paul Bell	Digitally signed by Paul Bell Date: 2017.05.15 15:37:10 -06'00'
Checked by	**Date**	**Approved by (QA)** For DP	**Date**
N/A		D. Priebe Michael Schultze	Digitally signed by Michael Schultze Date: 2017.05.15 18:47:45 -06'00'
Verified by (if required)	**Date**	**Approved by (PEM)**	**Date**

Status	Rev. No.	Date	Prepared By	Pages	Description of Changes
Final	0	05/17/2017	DPH	All	Approved for Bid

Safety Related: Yes ☐ No ☒	**Quality Level:** Full QA ☐ Enhanced QA ☒ Commercial QA ☐

TABLE OF CONTENTS

1.0 PART 1 - GENERAL 1
1.1 Section Scope 1
1.2 Related Sections 1
1.3 Codes and Standards 1
1.4 System Description 4
1.5 Submittals 4
1.6 Delivery, Storage & Handling 9
1.7 Quality Assurance 9
1.8 Site Conditions 11

2.0 PART 2 – PRODUCTS 13
2.1 Manufacturers 13
2.2 Material 13
2.3 Equipment 13
2.4 Components 17
2.5 Fabrication 26
2.6 Shop Quality Control 30

3.0 PART 3 – EXECUTION 32
3.1 Preparation 32
3.2 Erection, Installation & Application 32
3.3 Field Quality Control 32
3.4 Adjusting and Cleaning 32
3.5 Demonstration/Testing 32
3.6 Protection 33

4.0 LIST OF APPENDICES 34
4.1 Appendix A - Supporting Documentation Issued with this Specification 34

LIST OF TERMS

Abbreviations and Acronyms

Term	Definition
API	American Petroleum Institute
ASME	American Society of Mechanical Engineers
ASTM	American Society for Testing and Materials
AWG	American Wire Gauge
B&PV	Boiler and Pressure Vessel Code
CFR	Code of Federal Regulations
CGD	Commercial Grade Dedication
CMTR	Certified Material Test Reports
CoC	Certificate of Conformance
COTS	Commercial-off-the-shelf
CQA	Commercial Quality Assurance
CSI	Construction Specifications Institute
CWI	Certified Welding Inspector
DOE	U. S. Department of Energy
EQA	Enhanced Quality Assurance
FQA	Full Quality Assurance
GA	General Arrangement
HART	Highway Addressable Remote Transducer
IEC	International Electrotechnical Commission
IEEE	Institute of Electrical and Electronics Engineers
I/O	Input/Output
ILAC	International Laboratory Accreditation Cooperation
ISA	International Society of Automation
ISO	International Organization for Standardization
LAWPS	Low Activity Waste Pretreatment System
LCD	Liquid Crystal Display
NACLA	National Cooperation for Laboratory Accreditation
NCSL	National Conference of Standards Laboratories
NEC	National Electric Code
NDE	Nondestructive Examination

Term	Definition
NEMA	National Electrical Manufacturers Association
NFPA	National Fire Protection Association
NPS	Nominal Pipe Size
NPT	National Pipe Thread
NRTL	Nationally Recognized Testing Laboratory
OSHA	Occupational Safety and Health Administration
PCS	Process Control System
PDF	Portable Document Format
PSSH	Packaging, Storage, Shipping, and Handling
QA	Quality Assurance
QAIP	QA Inspection Plan
RF	Raised Face
RFI	Request for Information
SDC	Seismic Design Criteria
SDS	Safety Data Sheet
SS	Stainless Steel
SWC	Surge Withstand Capability
TBD	To Be Determined
UL	Underwriters Laboratories
WAC	Washington Administrative Code
WRPS	Washington River Protection Solutions, LLC

Units

Unit	Description
°C	Degree Centigrade
°F	Degree Fahrenheit
A	Ampere
CFM	Cubic Feet per Minute
cP	Centipoise
Ft	Foot
Ft^2	Square Foot
GPM	Gallons per Minute
Hz	Hertz
In	Inch
In^2	Square Inch
inH_2O	Inches of Water Column
Lb	Pound
Lb/Ft^3	Pound per Cubic Foot
Lb/Hr	Pound per Hour
mA	Milliampere
ohm	Electrical Resistance
psia	Pounds per Square Inch (absolute)
psid	Pounds per Square Inch (differential)
psig	Pounds per Square Inch (gauge)
RH	Relative Humidity
VAC	Voltage Alternating Current
VDC	Voltage Direct Current

Definitions

BUYER – The company for whom the VENDOR is performing work or services.

COMMERCIAL QUALITY ASSURANCE (CQA) – Level of controls for those items, services or processes where, based on and evaluation of risk or nuclear safety, no additional quality controls beyond the provider's published or stated attributes of the item, service, or process is required.

DESIGN CHANGE – Within the context of this specification, a DESIGN CHANGE is technically equivalent to a SUBSTITUTION (see SUBSTITUTION). However, the term DESIGN CHANGE may be used to refer to more significant changes to the design compared to a simple substitution.

DEVIATION – Any departure from the requirements contained in the purchase order and specification which VENDOR proposes to incorporate if approved by BUYER.

ENHANCED QUALITY ASSURANCE (EQA) – Level of controls for those items, services, or processes where, based on an evaluation of risk or nuclear safety, additional controls beyond the provider's published or stated attributes of the item, service or process are needed to verify critical attributes.

FULL QUALITY ASSURANCE (FQA) – Level of controls applied for items services, or processes that are commensurate with the controls invoked under ASME NQA-1 or other appropriate national consensus standard.

HANDLING – The movement or transportation of items following receipt from offsite/ project locations. This includes movement within storage areas and movement/transportation from receipt or storage areas to field locations. Handling requirements include the need for special handling tools and equipment, restrictions on material composition of surfaces in contact with the item, protection against damage or deterioration, which could occur during movement and placement, protection against physical damage due to excessive shock or vibration, and protection against entry of dirt, water, or other contaminants.

HOLD POINT – A Mandatory inspection activity beyond which work shall not proceed until (1) the inspection is performed by an independent inspector and/or BUYER and acceptance is authenticated, or (2) a written release is authorized by the organization who established the hold point.

MANUFACTURER – The Party responsible for making the product

MORE CONSERVATIVE – "More conservative" shall be interpreted as "more protective of the health, safety and well-being of Site workers and facilities, the public, and environment, as applicable."

NONCONFORMANCE – A deficiency in characteristic, documentation, or procedure that renders the quality of an item or activity unacceptable or indeterminate.

PROCUREMENT QUALITY CLAUSES (QA CLAUSES) – Procurement quality clauses are to be used for the acquisition of items and services. The clauses establish contractual obligations for quality program systems, identification, traceability, documents submittals, testing, reporting, qualification, special process controls, inspections, etc.

PRODUCT DATA – Printed information including, but not limited to, catalog cuts, color charts, illustrations, diagrams, templates, performance curves, brochures, and other forms of Product literature.

QUALITY ASSURANCE RECORDS – Quality assurance plans, procedures, and records, including completed documents that furnish evidence of the quality of an item or activities affecting quality.

SHALL / MUST – Denotes project requirements, compliance is required.

SHIPPING – The movement of items from an off-site/project location (VENDOR, warehouse, etc.) to an on-site/project location, or movement from an onsite/ project location to an off-site/project location. Shipping requirements include packaging and securing of items to protect against damage or deterioration which could occur during movement and transportation, protection against physical damage due to excessive shock or vibration, protection against entry of dirt, water, or other contaminants, and protection against other environmental conditions such as temperature or humidity.

SHOULD – Denotes recommendation or expectation, compliance is expected.

SPECIFICATION – Refers to any design, fabrication or supply specification.

STORAGE – Holding of items in areas that address: the probable maximum period to be held, the inherent physical limitations of the item itself, and required protection from potential hazards such as fire, corrosion, chemical attack and environmental conditions. Storage also includes the requirements for maintaining the integrity and operability of items through routine maintenance, cleaning, or other means of preservation.

SUBSTITUTION – Any change or deviation from issued approved drawings, designs, methods, or contract terms and conditions. Changes in products, materials, equipment, methods of construction, and test criteria required by the Contract Documents proposed by the VENDOR after award of the Contract are considered to be requests for substitution.

VENDOR – The company responsible for the supply of equipment and/or services.

WITNESS POINT – An inspection activity beyond which work shall not proceed until an inspector and/or BUYER is notified and (1) the inspection is performed and released, or (2) the inspection is deferred and can be completed at a later time, or (3) a written waiver is issued by the organization who established the witness point.

1.0 PART 1 - GENERAL

1.1 Section Scope

1.1.1 This specification covers engineering, design, fabrication, shipping and delivery for non-safety rated instrumentation for the Low Activity Waste Pretreatment System (LAWPS) Project (Project T5L01).

1.1.2 This specification applies to all non-safety equipment furnished by the instrumentation VENDOR.

1.1.3 This document serves to define the minimum requirements for non-safety instrumentation elements applied on the LAWPS project.

1.2 Related Sections

1.2.1 The following related documents contain additional instrumentation requirements:

01 25 00	Substitutions and Design Changes
01 33 00	Submittals
01 40 00	Quality Assurance
01 60 00	Labeling
01 66 00	Delivery, Storage, and Handling
01 81 01	General Service Natural Phenomena Hazard Performance Requirements
40 05 05 33	Pipe Welding

1.2.2 Should there be any conflicts/discrepancies amongst these documents; the VENDOR shall request a written resolution from the BUYER or BUYER's representative.

1.3 Codes and Standards

1.3.1 Work shall be performed in accordance with the referenced codes, standards, and documents for this specification.

1.3.2 The following codes and standards, of the exact issue shown, form part of the BUYER basis of design to the extent specified in the applicable sections of this document. In the event of a conflict between documents referenced herein and the requirements of this specification, the requirements of this specification shall take precedence only when this specification's requirements are more stringent or conservative. If a code or standard not listed below is to be applied to the scope (see Section 1.1), apply the latest code or standard as of April 16, 2015. VENDOR shall state, with proposal, any exceptions to these standards that, in VENDOR's opinion, are not applicable in whole or part.

1.3.3 In addition to Codes and Standards listed herein, all materials and workmanship shall be in accordance with all applicable US and local jurisdiction laws, codes and regulations.

1.3.4 Government Documents

1.3.4.1 DOE – United States Department of Energy
- DOE Order 414.1D, *Quality Assurance*

1.3.4.2 OSHA – Occupational Safety and Health Administration
- 29 CFR 1910 (2012)

1.3.4.3 Washington Administrative Code (WAC)
- 296-46B-010, *Inspections*
- 296-46B-903, *Equipment Standards*
- 296-46B-997, *Engineer Approval*
- 296-46B-999, *Electrical Testing Laboratory Requirements*

1.3.5 Non-Government Documents

1.3.5.1 ASME - American Society of Mechanical Engineers
- ASME AG-1, (2012), *Code on Nuclear Air and Gas Treatment*
- ASME B16.5 (2013), *Pipe Flanges and Flanged Fittings NPS ½ Through NPS 24 Metric/Inch Standard*
- ASME B16.36, (2009), *Orifice Flanges*
- ASME B31.3 (2012), *Process Piping*
- ASME B40.100 (2013), *Pressure Gauges and Gauge Attachments*
- ASME Boiler and Pressure Vessel Code (B&PV) Section II Pt C (2013), *Specifications for Welding Rods, Electrodes, and Filler Metals*
- ASME B&PV Section IX (2013), *Boiler and Pressure Vessel Code - Welding and Brazing Qualifications*
- ASME MFC-3M (2004) (addendum 2007) *Measurement of Fluid Flow in Pipes Using Orifice, Nozzle, and Venturi*
- ASME MFC-5.1 (2011) *Measurement of Liquid Flow in closed Conduits Using Transit-Time Ultras Sonic Flowmeters*
- ASME MFC-6M (2013) *Measurement of Fluid Flow in Pipes Using Vortex Flow Meters*
- ASME MFC-11 (2014) *Measurement of Fluid flow by Means of Coriolis Mass Flowmeters*
- ASME MFC-12M (2014) *Measurement of Fluid Flow in Closed Conduits Using Multiport Averaging Pitot Primary Elements*
- ASME MFC-14M (2008) *Measurement of Fluid Flow Using Small Bore Precision Orifice Meters*
- ASME MFC-16 (2014) *Measurement of Liquid Flow in Closed Circuits with Electromagnetic Flowmeters*
- ASME MFC-18M (2011) *Measurement of Fluid Flow using Variable Area Meters*
- ASME MFC-21.2 (2010) *Measurement of Fluid Flow by means of Thermal Dispersion Mass Flowmeters*

- ASME NQA-1, (2008) (2009 Addenda), *Quality Assurance Requirements for Nuclear Facility Applications*
- ASME PTC-19.1 (2013), *Test Uncertainty*
- ASME PTC-19.2 (2010), *Pressure Measurement Instruments and Apparatus Supplement*
- ASME PTC-19.3 (2010) TW, *Thermowell Performance Test Codes*
- ASME PTC-19.5 (2013), *Flow Measurement*

1.3.5.2 API - American Petroleum Institute

- API RP 551 (2007), *Process Measurement Instrumentation*
- API 598 (2009), *Valve Inspection and Testing*

1.3.5.3 ASTM - American Society for Testing and Materials

- ASTM E230/E230M (2012), *Standard Specification and Temperature-Electromotive Force (emf) Tables for Standardized Thermocouples*
- ASTM E585 (2012), *Standard Specification for Mineral-Insulated, Metal-Sheathed Base Metal Thermocouple Cable*
- ASTM E608/E608M (2013), *Standard Specification for Mineral-Insulated, Metal-Sheathed Base Metal Thermocouples*
- ASTM E1137/E1137M (2014), *Standard Specification for Industrial Platinum Resistance Thermometers*

1.3.5.4 IEEE – Institute of Electrical and Electronics Engineers

- IEEE C37.90 (2011), *Relays and Relay Systems Associated with Electric Power Apparatus*
- IEEE C37.90.1 (2012), *Guide for Surge Withstand Capability (SWC) Tests*
- IEEE 383 (2008), *Standard for Type Test for Qualifying Electric Cables and Splices for Nuclear Facility*

1.3.5.5 ISA – The International Society of Automation

- ISA 5.1 (2009), *Instrumentation Symbols and Identification*
- ISA 5.4 (1991), *Instrument Loop Diagrams*
- ISA 12.10 (1988), *Area Classification in Hazardous (Classified) Dust Locations*
- ISA 12.12.01 (2013), *Nonincendive Electrical Equipment for Use in Class I and II, Division 2 and Class III, Divisions 1 and 2 Hazardous (Classified) Locations*
- ISA 60079-29-1 (2013), *Explosive Atmospheres – Part 29-1: Gas Detectors – Performance requirements of detectors for flammable gases*
- ISA 20, (1981), *Specification Forms for Process Measurement and Control Instruments, Primary Elements and Control Valves*
- ISA TR5.1.01/TR77.40.01 (2012), *Functional Diagram Usage*

1.3.5.6 ISO – International Organization for Standardization

- ISO 9001, *Quality Management Systems - Requirements*

1.3.5.7 ISO/IEC – International Organization for Standardization / International Electrotechnical Commission

- ISO/IEC 17025 (2005), *General Requirements for the Competence of Testing and Calibration Laboratories*

1.3.5.8 NCSL – National Conference of Standards Laboratories
- NCSL Z540-3 (2006), *Requirements for the Calibration of Measuring and Test Equipment*

1.3.5.9 NEMA – National Electrical Manufacturers Association
- NEMA ICS 1 (2000), (reaffirmed 2010), *Industrial Control and Systems: General Requirements*
- NEMA ICS 6 (1993), (reaffirmed 2011), *Industrial Controls and Systems: Enclosures*
- NEMA 250 2014, *Enclosures for Electrical Equipment (1000 Volts Maximum)*

1.3.5.10 NFPA – National Fire Protection Association
- NFPA 70 (2014), *National Electric Code*

1.3.5.11 UL – Underwriters Laboratories
- UL-44 (2014), *Rubber and Insulated Wires and Cables*
- UL-1581 (2001), *Standard for Safety Reference Standard for Electrical Wires, Cables, and Flexible Cords*
- UL-508A (2013), *Industrial Control Panels*

1.3.6 Non-Code of Record Documents/Related Documents/Drawings

See Section 1.2, Related Sections.

1.4 System Description

1.4.1 Description

The instrumentation that falls under the scope of supply of this specification is as follows:

1.4.1.1 Instrumentation as defined on the instrument data sheets listed in Appendix A Supporting Documents.

1.4.1.2 All accessories, materials, and methods of fabrication not specifically addressed in this Specification, but which are necessary to provide complete instrument as defined on the data sheets. This selection shall be carried out in accordance with good engineering practices subject to written approval by BUYER.

1.5 Submittals

1.5.1 Submittals that are listed within this section shall be prepared and processed in accordance with requirements of CSI Section 01 33 00, "Submittals" and shall include all of the required Quality Assurance documentation in accordance with CSI Section 01 40 00, "Quality Assurance."

1.5.2 Instrumentation and controls drawing symbols, legend, and terminology shall comply with guidelines of ISA-5.1 and ISA-51.1.

1.5.3 Final Data Package submittal items listed in Section 1.5.9 shall be submitted and approved by the BUYER prior to release for shipment.

1.5.4 Calculations and drawings should be prepared in accordance with VENDOR procedures.

1.5.5 The following documents shall be submitted with the Proposal Package.

1.5.5.1 Project Schedule

1.5.5.2 Drawing List

1.5.5.3 Quality Assurance Program Manual per ISO 9001, *Quality Management Systems – Requirements* or NQA-1-2008/2009 Addendum.

A. Suspect/Counterfeit Items Program per DOE O 414.1D, Attachment 3 or Buyer approved program. Submit certification against the procurement of potentially suspect or counterfeit items (i.e., all supplied materials shall be genuine, new, and unused), in accordance with QA Clause B76.

1.5.5.4 Instrument List

1.5.5.5 General Arrangements

1.5.6 The following final design review package documents shall be submitted for Review and Approval prior to releasing the equipment for fabrication.

1.5.6.1 Calculations

A. Seismic criteria compliance per Section 1.8.1.3 and 2.3.1.21.
B. For thermowells, VENDOR shall provide calculations in accordance with ASME PTC-19.3-TW for BUYER's review and approval to determine that the wake frequency is not greater than 66% of the thermowell resonant frequency and that fatigue and bending stress are within appropriate limits.
C. Instrument sizing

1.5.6.2 Fabrication/Inspection/Test Plan in accordance with QA Clause B13.

A. The VENDOR as a minimum shall incorporate BUYER's QA Inspection Plan (QAIP) inspections and reviews into VENDOR's Inspection and Test Plan.
B. This plan shall include lower tier VENDORs and subcontractor's names and locations where fabrication, inspection, installation and testing will be performed.
C. The VENDOR's Inspection and Test Plan shall incorporate all inspections required for Enhanced Quality Assurance (EQA) devices.

1.5.6.3 Instrument Data Sheets

A. Data Sheets shall be supplied in accordance with QA Clause B33.
B. BUYER shall verify that instrument manufacturer model number is complete with all necessary options and components. BUYER shall provide any purchase order specific model option numbers as part of Instrument Data Sheets.

1.5.6.4 Drawings

A. Dimensioned general arrangement (GA) drawings.
B. Wiring termination documentation shall include but are not limited to, detail electrical schematics, electrical wiring diagrams, power distribution and grounding diagrams, termination schedules, input/output (I/O) schedule, label details, system configuration details and supplied cable details.

1.5.6.5 Manufacturers Data – Cabinets & Enclosures

A. Catalog cut sheets showing model information and ratings in accordance with QA Clause B33.
B. Seismic Qualification Documentation (if any).

1.5.6.6 Welding Procedures and Qualifications where EQA data sheets specify process containment as a critical characteristic, in accordance with QA Clause B28.

A. American Weld Society Certified Welding Inspector (CWI) Qualifications Records will be provided for personnel that perform project work where specified on EQA data sheets, in accordance with QA Clause B25.
B. Nondestructive Examination (NDE) Procedures will be provided where specified on EQA data sheets, in accordance with QA Clause B31.
C. Material Control Procedures shall be provided to ensure prevention of component and weld rods/fillers material contamination, particularly stainless steel cross contamination with carbon steel and halogens.

1.5.6.7 Certified Electrical Inspector Qualifications Records, where EQA data sheets specify (process condition) measurement as a critical characteristic, will be provided for personnel that perform project work in accordance with QA Clause B17.

1.5.7 Technical Submittals

1.5.7.1 VENDOR Proposal Package (Reference Section 1.5.5)

1.5.7.2 List of Fabrication Codes and Standards

1.5.7.3 Request for Information (RFI)
- RFI shall be submitted on BUYER supplied form A-6003-417.

1.5.7.4 Final Design Review Package (Reference Section 1.5.6)

1.5.7.5 Nonconformance Reports/Deficiency Reports

A. Non-conformance reports shall be approved in accordance with QA Clause B22.

1.5.8 Delivery Storage and Handling

1.5.8.1 Packaging, Storage, Shipping & Handling (PSSH) Plan in accordance with QA Clause B85.

1.5.8.2 Site Assembly Instructions for each device.

1.5.9 Final Lifetime Records

The VENDOR shall prepare a documentation Final Data Package for each item, comprised of the following:

1.5.9.1 Certificates of Conformance (COCs) & Signature Verification Sheets

A. To demonstrate compliance with the Codes and Standards, VENDOR shall ensure that these products are supplied with a Certificate of Conformance in accordance with QA Clause B79.
B. Certificate of Conformance shall certify that devices are new and not used, and comply with the requirements herein. Certificate of Conformance shall also certify the manufacturing standard that applies to the valves and the COC references the corresponding purchase order.

1.5.9.2 Certified Material Test Reports (CMTRs)

A. CMTRs shall be supplied in accordance with QA Clause B49.
B. Where specified on EQA data sheets.
   i. Instrument components and accessories (e.g. flanges) that provide for process containment shall be supplied with CMTRs.
   ii. Filler Material, weld wire and electrode CMTRs for all welds performed on process containment components.
   iii. Welded materials critical to instrument measurement functions (e.g. orifice plates, magnetic meter lining protectors, guided wave radar probe).
C. Commercial Quality Assurance (CQA) devices do not require CMTRs.

1.5.9.3 Weld Documentation

A. Where EQA data sheets specify process containment as a critical characteristic the following apply:
   i. Weld maps
   ii. Weld Inspection Reports in accordance with QA clause B52: All welds that are performed on process containment components shall be 100% visual examination per ASME B31.3.
   iii. Weld History Reports in accordance with QA Clause B52: All welds that are performed on process containment components shall have weld history maintained and logged, in accordance with QA Clause B46 and section 2.6.1.2.
   iv. Nondestructive Inspection Reports in accordance with QA Clause B31.
   v. Liquid Penetrant Material Certification, in accordance with QA Clause B46 and section 2.6.1.2.

1.5.9.4 Certificates and Reports

A. Certification of Calibration shall be submitted for instrumentation in accordance with QA Clause B61. Calibration documentation indicating instrument and/or

control device calibrated, setpoints, calibration results (including "As Found," and "As Left" data), test curves, test reports, and calibration technicians initials, and date of calibration.

B. Pressure Test Reports in accordance with QA Clause B52. Pressure Test Reports in accordance with QA Clause B52. Reports shall include as a minimum design pressure or working pressure, full test pressure, hold times, halogen content of water used in testing, temperature of water during the test, and pressure gauge range.

C. Calibration certificates for VENDOR owned instruments and measurement equipment used during testing, in accordance with QA Clause B12.

1.5.9.5 Nonconformance Reports shall be approved In accordance with QA Clause B22.

1.5.9.6 Manufacturers/VENDORS Data

A. Data sheets on all instruments shall be supplied in accordance with QA Clause B33.

i. All items shall be labeled with a part number/model number in accordance with QA Clause B32.

ii. All electrical panels and electrical equipment shall be listed by a Nationally Recognized Testing Laboratory (NRTL) and labeled in accordance with QA Clause B65.

B. Safety Data Sheets (SDS) shall be provided where available. SDS shall be compliant to OSHA 29 CFR 1910 requirements.

C. Installation and instruction manuals for all instruments and accessories including but not limited to: operation, installation and maintenance.

D. Firmware/Software Records and Licenses

E. Recommended spare parts listing in accordance with QA Clause B82.

1.5.9.7 Calculations (reference Section 1.5.6.1)

1.5.9.8 As-Built Drawings

A. Provide block diagrams and engineering drawings. Drawings shall delineate instruments, equipment panels and contain complete parts lists with VENDOR's part number, quantities and material descriptions.

B. Enclosure layout drawings; exterior and interior (if applicable).

C. System power and grounding diagrams.

D. Wiring diagrams showing cables, wiring, and wiring terminations. Wiring diagrams shall delineate termination panels for field devices.

E. Diagrams shall show operation of equipment/systems in enough detail to provide clear understanding and permit troubleshooting of installation.

F. Designate field installed wires with numbers or letter and retain same designation throughout, independent of splices at terminal blocks.

G. All drawings shall be submitted in native and Portable Document Format (PDF).

1.6 Delivery, Storage & Handling

1.6.1 After acceptance of shop test by BUYER, VENDOR shall disconnect all equipment and prepare the items for shipment per CSI Section 01 66 00, "Delivery Storage and Handling," as appropriate to specified level of protection.

1.6.2 VENDOR shall submit a PSSH per Section 1.5.8.1 Packaging, Storage, Shipping & Handling (PSSH) Plan in accordance with QA Clause B85.

1.6.3 Panels shall be suitably packed or crated to ISA-RP60.11 standards so as to be protected from damage during shipment.

1.6.4 VENDOR shall provide installation instructions per Section 1.5.9.6, Manufacturers/VENDOR Data.

1.6.5 All interconnecting cables shall be labelled at each end specifying panel, terminal panel and plug-in receptacle to which cable is to be reconnected.

1.6.6 VENDOR shall be responsible for ensuring that no physical damage to equipment occurs during transit to the plant and field sites.

1.6.7 Firmware and software program discs (if applicable) shall be separately packaged and mailed by insured express mail to BUYER. Two separate identical copies shall be mailed in separate packages to ensure that at least one of them is delivered to the proper person.

1.6.8 VENDOR shall advise on requirements for storage of equipment at site prior to installation.

1.6.9 Instruments and Panels shall be crated, boxed or otherwise protected against damage or loss during shipment, and to facilitate field handling.

1.6.10 Butt weld ends and flanges shall be protected with either wood, wood fiber or plastic covers. All female threaded and socket weld openings shall be closed with either plastic or metal plugs. Covers or caps containing fluorides, chlorides, sulfur, lead, zinc, copper and mercury are not allowed on stainless steel ends.

1.6.11 Loose components shall be securely attached to the unit or be shipped separately in a box.

1.7 Quality Assurance

1.7.1 Applicable QA Clauses are summarized in the table below. The full QA Clause definition and associated requirements are located in CSI Section 01 40 00, "Quality Assurance."

Table 1.7-1 Procurement Quality Clause

SUPPLIER FABRICATION
B12 Supplier Use of Calibrated Equipment
B13 Fabrication/Inspection/Test Plan
B17 Certified Electrical Inspector (Non-NEC-IAEI)
B22 Nonconformance Documentation and Reporting
B25 Certified Weld Inspector (CWI)
B28 Welding Procedures and Qualifications
B31 Nondestructive Examination Process
MATERIAL IDENTIFICATION
B32 Identification of Items with Part number/Model number
B33 Identification of Items with Catalog Cut
TESTING AND TEST DATA
B46 Liquid Penetrant Material Certification
B49 Certified Material Test Report
B52 Inspection and Test Report
B61 Certification of Calibration
B65 Nationally Recognized Testing Laboratory (NRTL) Listed or Labeled
INSPECTION AND ACCEPTANCE CRITERIA
B76 Procurement of Potentially Suspect or Counterfeit Items
B79 Certificate of Conformance
B82 Recommended Spare Parts Listing
MATERIAL HANDLING
B85 Packaging/Shipping Procedures

1.7.2 The verification points, required by Table 1.7-2, shall be in accordance with CSI Section 01 40 00, "Quality Assurance," and verified by the BUYER, as applicable.

1.7.3 The VENDOR shall implement and maintain a calibration system in accordance with ISO/IEC 17025:2005, *General Requirements for the Competence of Testing and Calibration Laboratories*; or as an alternative, a calibration system that complies with NCSL Z540-3, *Requirements for the Calibration of Measuring and Test Equipment*. The contractor may accept accreditation of the VENDOR's calibration system if the identified accredited body is recognized by either the National Cooperation for Laboratory Accreditation (NACLA) or the International Laboratory Accreditation Cooperation (ILAC) in lieu of Contractor review and approval.

1.7.4 VENDOR labor shall be appropriately qualified for tasks by education, experience, and certifications.

1.7.5 Upon completion, VENDOR shall provide as electronic files all submittal documents/information as detailed within in CSI Section 01 33 00, "Submittals."

1.7.6 The following verification points required by this section shall be in accordance with CSI Section 01 40 00, "Quality Assurance," verified by the BUYER, as applicable.

1.7.6.1 At a minimum, the following witness and hold points for instrumentation and controls shall apply:

Table 1.7-2 Hold and Witness Point Verification

Verification Point Description	Type of Verification
Prior to Shipping	Hold

1.7.6.2 Additional instrument specific hold and witness points may be specified on the data sheets.

1.7.7 The VENDOR shall provide required notifications of verification points in accordance with CSI Section 01 40 00, "Quality Assurance," as applicable, and shall not proceed past required hold points without written authorization from the BUYER QA representative.

1.8 Site Conditions

1.8.1 VENDOR's equipment shall be suitable for operation in the conditions of service as stated below:

Instruments data sheets shall specify ambient conditions for instrument locations.

1.8.1.1 The LAWPS site design site conditions are as follows:

- Outdoor temperature: -25°F to 115°F
- Outdoor relative humidity: 0 – 100%
- Barometric pressure: 14.35 psia (measured at a meteorological tower 733 feet above sea level)

1.8.1.2 The LAWPS site indoor conditions are to be maintained as follows:

- Normal Operational Indoor temperature: 60°F to 120°F +/-10°F
- Off-Normal Indoor temperature: 20°F to 140°F
- Normal Operational Indoor relative humidity: 5% to 70% RH @ Normal Operational Indoor Temperature Above
- Off-Normal Indoor relative humidity: 5% to 100% RH @ Off-Normal Indoor Temperature Above

1.8.1.3 Seismic service shall be to CSI Section 01 81 01, "General Service Natural Phenomena Hazard Performance Requirements."

A. Panels and instruments as a minimum shall meet CSI Section 01 81 01 Section 1.8.7 anchorage requirements.

2.0 PART 2 – PRODUCTS

2.1 Manufacturers

2.1.1 Sub-contracting to other manufacturers is to be in accordance with the procurement package.

2.1.2 Materials which are specified by manufacturer and/or proprietary name on instrument data sheets are so specified only for the purpose of establishing the type and standard of quality required. The manufacturer and/or proprietary names do not preclude the use of BUYER-approved substitutes. Where names of manufacturers are listed, the order of listing is not indicative of an order of preference. All substitutions shall be accompanied with manufacturer's catalog data.

2.2 Material

2.2.1 The instruments, controls and software supplied shall be industry standard, commercial off-the-shelf, and be part of an existing product line.

2.2.2 All products shall be new and unused. Items not specified herein or on the drawings shall be new and of the highest quality of their respective kinds.

2.2.3 The use of non-combustible and limited-combustible materials is required to the fullest extent possible. Where there is an opportunity to choose between readily available materials, non-combustible and limited-combustible materials shall be selected.

2.2.4 VENDOR shall standardize on components used to the greatest extent possible.

2.3 Equipment

2.3.1 General Requirements

2.3.1.1 All instrumentation and control devices shall be suitable for continuous operation under the design environmental conditions and area classification.

2.3.1.2 Location of all instruments shall be planned for accessibility and removal.

2.3.1.3 All instruments shall be calibrated before shipment. A calibration sticker shall be attached to each instrument and/or control device with the technician's initials and date of calibration.

2.3.1.4 All alarm switches shall operate with actuating contacts closed for normal process conditions. Abnormal process conditions shall cause relays to de-energize and contacts to open. Multifunction alarms shall be avoided.

2.3.1.5 Engineering Units (Units of Measurement)
Engineering Units for all instrumentation and control equipment shall be US customary units. The following are some of the common units used:

Table 2.3-1 Engineering Units

Unit Description	Unit
Area	In^2, Ft^2
Density	Lb/Ft^3
Flow (mass)	Lb/Hr
Flow (volumetric)	GPM, CFM
Length	In, Ft
Level	%, In, Ft
Mass	Lb
Pressure (absolute)	psia
Pressure (gage)	psig
Pressure (differential)	psid, in H_2O
Temperature	°F
Viscosity	cP

2.3.1.6 Process connections for instrumentation shall conform to this specification and as stated on the data sheets.

2.3.1.7 Analog control instrumentation that interfaces with the main plant control equipment shall use isolated 4-20 mA 24 VDC.

2.3.1.8 All process transmitters supplied by VENDOR shall be 4-20 mA 24 VDC transmitters with HART communication and shall be equipped with surge protection.

2.3.1.9 Process transmitters shall have an integral LCD display, where available from VENDOR.

2.3.1.10 VENDOR shall provide one configuration and calibration device for each manufacturer's transmitter type.

2.3.1.11 Flow measuring device calculations shall be prepared by the VENDOR using customary U.S. measurement units. Charts, scales, and other documents covered by this specification shall also be in U.S. customary measurement units.

2.3.1.12 All elastomers (liners, gasketing, packing, etc.) shall be compatible with the process service. Teflon components must be approved by BUYER prior to use.

2.3.1.13 All alarm or shutdown switches shall have hermetically sealed, dual, Form C contacts with a minimum rating of 10A resistive at 120 VAC, 0.5A resistive at 125 VDC, or 3A resistive at 28 VDC.

2.3.1.14 All electro-mechanical switch contacts used with interrogation voltages under 120 VAC shall have gold flashed contacts.

2.3.1.15 Mercury switches shall not be used.

2.3.1.16 The measuring element shall be able to withstand a differential pressure equal to the maximum body rating without significantly affecting calibration.

2.3.1.17 Process sensing lines shall be NPS ½ unless otherwise stated in data sheets.

2.3.1.18 Where specified on instrument data sheets, welds that provide process containment or that include components that provide process containment shall be provided with certifications per CSI Section 40 05 05 33, "Pipe Welding." These certifications shall include but are not limited to the following:

- Filler Material, weld wire and electrode CMTRs
- Welder qualifications
- Weld procedures and/or specification
- Weld examination inspection records
- NDE Inspector certification / qualification records

2.3.1.19 Instrument data sheets will specify local ionizing radiation levels. Materials and electronics shall be provided to withstand these required levels.

2.3.1.20 Transmitter housing will preferably have two compartments to separate the electronics from the field connections.

2.3.1.21 Instruments shall meet seismic service requirements, where requirement stated on instrument data sheets.

A. Wall mounted panels and enclosures that do not have specific seismic requirements shall meet anchorage requirements in Section 1.8.1.3.A. (If applicable)

2.3.1.22 Ventilation service instruments shall be provided with accuracies meeting or exceeding ASME AG-1 Table TA-3200.

2.3.1.23 Instruments shall meet standard tolerances for respective referenced instrument type specific codes unless specific tolerance requirements are stated on the data sheets.

2.3.1.24 CQA devices shall be provided with the following Final Lifetime Records submittals as a minimum:

A. CoCs in accordance with Section 1.5.9.1
B. Certificates of Calibration in accordance with Section 1.5.9.4.A
C. Data Sheets, Drawings and Manufacturers/VENDORS data in accordance with Sections 1.5.6.3, 1.5.6.4, 1.5.6.5 and 1.5.9.6
D. Calculations in accordance with Sections 1.5.6.1 and 1.5.9.7

2.3.1.25 EQA devices shall be provided with the following Final Lifetime Records submittals as a minimum:

A. CoCs in accordance with Section 1.5.9.1
B. Certificates of Calibration in accordance with Sections 1.5.9.4.A and 1.5.9.4.C
C. Data Sheets, Drawings and Manufacturers/VENDORS data in accordance with Sections 1.5.6.3, 1.5.6.4, 1.5.6.5 and 1.5.9.6
D. Calculations in accordance with Sections 1.5.6.1 and 1.5.9.7
E. Where devices are designated with critical characteristic: process containment, the following additional submittals shall be provided:

   i. Welding Procedures, Qualifications and Documentation in accordance with Sections 1.5.6.6 and 1.5.9.3.
   ii. CMTRs in accordance with Section 1.5.9.2.
   iii. Reports in accordance with Section 1.5.9.4.B.

F. Where devices are designated with critical characteristic: (process condition) measurement, the following additional submittals shall be provided:

   i. Certified Electrical Inspector Qualifications Records in accordance with Sections 1.5.6.7

2.3.2 Electrical Requirements

2.3.2.1 The equipment and its installation shall meet the area electrical classification stated on the Equipment Data Sheets.

2.3.2.2 All electrical designs shall comply with NFPA 70, *National Electrical Code* (NEC), and Washington Administrative Code (WAC) requirements.

2.3.2.3 All system grounds shall comply with the NEC requirements.

2.3.2.4 External instrument power, if required from BUYER, shall be provided as 120 VAC.

2.3.2.5 At no time shall any voltage in excess of 125 VDC or 120 VAC, 60 Hz be allowed in any instrument/control systems panel without express written release from BUYER.

2.3.3 Identification and Marking

2.3.3.1 Instruments and control components shall be permanently labelled with identification numbers in accordance with tags identified in data sheets and drawings.

2.3.3.2 Wire identification: VENDOR shall clearly and permanently label internal panel wiring as shown on VENDOR's termination wiring diagrams.

2.3.3.3 Each instrument shall have a stainless steel nameplate attached. Nameplates shall include at least the manufacturer's name, figure number, serial number and size.

2.3.3.4 All Instrument and accessory labels shall be provided and affixed to instrument in accordance with CSI Section 01 60 00, "Labeling."

2.3.3.5 Designate wires with numbers or letters and retain same designation throughout, independent of splices at terminal blocks.

2.3.3.6 All thermowells shall have the instrument tag number stamped or engraved on the well so that the number is plainly visible when the well is installed in the pipe with pipe insulation installed.

2.3.3.7 Panel tubing bulkhead fittings shall be tagged with the instrument tag number.

2.3.4 Maintainability

2.3.4.1 Equipment shall have access panels where replacement of parts or component maintenance is necessary.

2.3.4.2 The design shall incorporate installed test connections, jacks and plugs for testing and calibration.

2.3.5 Critical Characteristics

Component critical characteristics of performance are stated on respective data sheets with associated required documentation. (If applicable)

2.4 Components

2.4.1 Flow Instruments

2.4.1.1 General

A. Orifice, flow nozzle, and venturi calculations shall be performed in accordance with ASME or "Flow Measurement Engineering Handbook," by Richard W. Miller, as appropriate.
B. Maximum allowable turndown for differential pressure type flow meters shall not exceed 5.0 to 1. Normally, it is preferred that turndown not exceed 4.0 to 1. Where larger turndowns are required, VENDOR shall confirm device accuracy and repeatability.
C. In the final documentation Data Sheets, VENDOR shall specify the actually measured internal pipe diameters, orifice bores, and Beta ratios with an accuracy of ±0.001in. Beta ratios shall be between 0.25 and 0.7. VENDOR shall provide flow calculations at the measured flow element bore.
D. For liquid service and for gas service greater than 100 psia, differential pressure measurement spans shall be at least 100 inH_2O at the designed flow rate, unless otherwise approved by the BUYER. Differential pressure measurement span shall not exceed 400 inH_2O.
E. For gas service, orifice design differential pressure range in inH_2O shall not exceed the magnitude of the process static pressure in psia.
F. Differential pressure transmitters shall have stainless steel sensing parts unless process service conditions require other materials.

G. All differential pressure flow transmitters shall be installed with a stainless steel 5-valve manifold equalizing assembly. Electronic transmitters shall mount directly to the manifold.
H. Pipe section upstream and downstream lengths from a flowmeter shall be based on requirements of the governing standard or the flowmeter manufacturer's recommendations, whichever is longer.
I. Flow instrumentation application and installation shall meet the requirements of API 551 except where modified by this specification.
J. Square Root Extraction used on differential pressure type flowmeters will be performed in the LAWPS PCS or Safety instrument System (SIS), and not in the flow transmitter.
K. Horizontal installation of flowmeters is preferred and vertical installation should be avoided wherever possible. Meter runs may be installed vertically only if:
   - The process fluid is liquid and the flow is upwards.
   - The process fluid is gas and the flow is downwards.
   - Vertical installation is required by the type of flow instrument (i.e. rotameters);

2.4.1.2 Orifice Plates

A. Orifice plates for flow measurement shall be concentric, square-edged orifice plates meeting the requirements of ASME-MFC-3M or ASME PTC-19.5.
B. For wet gases or dirty fluids, eccentric orifice plates may be used upon written release by BUYER.
C. Orifice plate material shall be 316 SS or a material that is more corrosion resistant and wear resistant as required by the process.
D. Orifice plates shall have shall have the following information stamped or engraved on the upstream side of the orifice plate:
   - Tag Number
   - Plate Material
   - Line Size
   - Orifice Bore
   - Flange Pressure Rating
   - The word "Inlet"

E. All orifices shall be bored to the nearest 1/8in, unless otherwise required on instrument data sheets.
F. Orifice flanges shall comply with ASME B16.36. Minimum pressure rating for orifice flanges shall be ASME class 300 flanges.
G. Orifice flanges shall be raised face (RF) flanges.
H. Orifice flanges shall be weldneck flanges. Slip-on flanges are prohibited.
I. Orifices in services that require frequent inspection shall be installed in a junior orifice fitting.
J. Orifices in services requiring that the orifice plate be inspected or changed while the meter run is in service shall use senior orifice fittings.
K. Flow measurement orifices 1-1/2in or smaller shall normally be supplied as integral orifice flowmeters.

2.4.1.3 Flow Nozzles

A. Flow nozzle material shall be 316 SS minimum.
B. Flow nozzles shall meet the requirements of ASME-MFC-3M or ASME PTC-19.5.

2.4.1.4 Venturis

A. Venturis shall meet the requirements of ASME-MFC-3M or ASME PTC-19.5.

2.4.1.5 Coriolis Mass Flowmeters

A. Coriolis meters shall meet the requirements of ASME- MFC-11.
B. Display shall be provided with Coriolis meter with the following features as a minimum:
   - Flow rate display
   - Totalized flow display
   - Manual or remote reset
   - Flow-no flow indication
   - Diagnostic failure indication
   - Power-On Indication

C. Coriolis meters, where specified, shall provide density data to PCS.
D. Coriolis meters, where remote transmitters are specified, option for remote mounting elements core processor shall also be provided with distance limitation to the transmitter and element.
E. VENDOR shall provide all cabling between Coriolis meter components.

2.4.1.6 Magnetic Flowmeters

A. Magnetic flow tube shall be lined with a material suitable for the application. The liner shall be attached to the tube such that the partial or full vacuum will not cause the liner to collapse. The field coils and cores shall be field replaceable without removing the tube from the line and without affecting calibrated accuracy.
B. Electrode type and material shall be based on data sheet process conditions and notes.
C. Magnetic flow meters, where required, may have remote transmitters specified. Interconnecting wiring from remote housing to transmitter shall be provided to data sheet specified length. Remote transmitters shall be provided with mounting bracket and hardware.
D. Magnetic flow meter process connections shall be weldneck RF flanges. Flanges shall be rated per the piping specification.
E. Separate sealed electrode housing shall be used where option is available.
F. Lining protectors shall be provided. Material shall be BUYER approved.
G. Magnetic flow meters shall be equipped with an internal, adjustable low flow cut off. Below selected value, the output shall be driven to zero flow signal.
H. Magnetic flow meters shall meet the requirements of ASME- MFC-16.

2.4.1.7 Vortex Flowmeters

A. Vortex Meters shall meet the requirements of ASME- MFC-6M.
B. Vortex Meters shall be equipped with an internal, adjustable low flow cut off. Below selected value, the output shall be driven to zero flow signal.

2.4.1.8 Variable Area Flowmeters and Flow Switches

A. Variable Area Meters and Switches shall meet the requirements of ASME- MFC-18M.

2.4.2 Level Instruments

2.4.2.1 General

A. Differential pressure level instruments shall be provided with a stainless steel, 5-valve manifold, unless diaphragm seals are required on instrument data sheet.
B. Use of any level instrument with a radioactive element is prohibited.
C. Level instrumentation application and installation shall meet the requirements of API 551 except where modified by this specification.
D. Level transmitter probe connections shall be RF flanges. Flanges shall be rated per the piping specification.

2.4.2.2 Displacer and Float Type Level Devices

A. For services below 600 psig, magnetic float level gauges, transmitters, and switches on a single column may be provided in place of separate level devices.
B. For general liquid services, local level instruments may be of the external displacement or float type and shall be of the conventional torque tube type. Devices shall have a minimum level range of 14in, and shall have a maximum level range of 48in.
C. Block, vent and drain valves shall be supplied. 1/2in shall be standard valve size. Other sizes must be approved by BUYER.
D. Flanged float assemblies shall be provided to allow access to the float mechanism for maintenance.
E. Differential pressure and displacement-type level instruments shall have bodies and trim suitable for process fluid conditions and temperatures. Minimum trim materials shall be stainless steel, unless other material specified on data sheets.

2.4.2.3 Non-Contacting Radar

A. Non-contacting radar installations shall be mounted in BUYER supplied stilling wells. The stilling wells as a minimum shall be 3 NPS.

2.4.2.4 Guided Wave Radar

A. Guided wave radar installations may be mounted in BUYER supplied stilling wells. The stilling wells as a minimum shall be 3 NPS.
B. Flexible probes mounted in stilling wells shall be provided with centering discs. VENDOR shall provide number and spacing requirements for each device.
C. Non-contacting radar devices, where required, may have remote transmitters specified. Interconnecting wiring from remote housing to transmitter shall be provided to data sheet specified length. Remote transmitters shall be provided with mounting bracket and hardware.
D. End weights shall be provided by VENDOR for flexible probes.
E. VENDOR shall provide probes to specified lengths. Probes are not to be provided as a field cut probe.

2.4.2.5 Gauge Glasses

A. Magnetic level gauges are preferred to gauge glasses and shall be used wherever codes allow this substitution to be made.
B. All gauge glasses shall be of the reflex type with the exception of the following, which shall be of the transparent type with illuminators:

   i. Liquids containing any type of sediment that can coat the inner surface of the reflex glass.
   ii. Liquids at temperatures of 32°F or less. All gauges of this type shall also be equipped with frost shields and be large chamber type.
   iii. Solvent service.
   iv. Three-phase production separators.
   v. Mica shields and large chambers shall be used on boiling liquids and condensate.

C. Tubular Pyrex glasses may be used only on vessels or tanks that are at atmospheric pressure and then these may be used only with specific written permission from BUYER. Where tubular Pyrex glasses are permitted, at least four vertical protection bars shall be used to protect the glass from damage.
D. For level gauge installation, the standard gauge glass section length shall have 12-5/8in visible. A maximum of 4 sections may be used in one gauge assembly.
E. Liquid level gauge cocks shall be of the ballcheck, offset, easy cleanout type with a union or flanged connection, 1/2in NPT gauge and 3/4in union process connections.

2.4.2.6 Ultrasonic Level Switches

A. Ultrasonic level switches, where required, may have remote transmitters specified. Interconnecting wiring from remote housing to transmitter shall be provided to data sheet specified length. Remote transmitters shall be provided with mounting bracket and hardware.

2.4.3 Pressure Instruments

2.4.3.1 General

A. Primary pressure elements shall be stainless steel for all pressure instruments unless conditions of service require otherwise. Aluminum pressure containing parts shall not be used.
B. Pressure instruments shall be provided with 5 or 2-valve manifolds or block and bleed valves. Minimum acceptable manifold and valve material is 316 SS.
C. Pressure instrumentation application and installation shall meet the requirements of API 551 except where modified by this specification.

2.4.3.2 Pressure Gauges

A. Pressure gauges shall be 4-1/2in dial, solid front safety case type with blowout back, 1/2in NPT bottom connection, plastic or drawn stainless steel case, 316 SS bourdon and socket, stainless steel movement, micrometer pointer. When physical conditions require it, a 1/2in NPT back male connection can be provided.
B. Dials shall be plastic or aluminum, white background with black dial and delineations.
C. 316 SS pulsation dampeners shall be provided for pulsating pressure services.
D. A siphon shall be provided for all close-coupled gauges in steam service. Gauges mounted below the instrument tap that have a significant run of impulse tubing need not have a siphon.
E. Ranging of the instrument should be that the normal working value lies between 60% and 75% of the full scale of the device. The range shall also be capable of accepting any high transients without any subsequent deterioration in performance.
F. Measuring element shall withstand an overpressure of 1.3 x full scale (and full vacuum when specified) without having any effect on the calibration.
G. Pressure gauges with diaphragm seals shall be supplied completely assembled and filled. The diaphragm shall be welded to the body so that the fluid will not escape when the diaphragm is disassembled.

2.4.3.3 Pressure Switches

A. Pressure switches installed shall be capable of sensing full line pressure without damage or affecting calibration.
B. Dedicated switches shall be provided for all shutdowns.
C. Hermetically sealed, dual Form C contacts shall be supplied on all field mounted pressure switches. Electrical leads on factory sealed switches shall be at least 18in long and labeled to identify normally open, normally closed, and common leads. For low pressure applications where dual Form C contacts are unavailable, or where a dual Form C switch unit would produce an unacceptably wide deadband, a single Form C switch may be use with written release from the BUYER.
D. Overpressure protection shall be provided for 150% of maximum range setting on all pressure switches and 150% of normal static head for all differential pressure switches.

E. For differential pressure switches, the setpoint and the deadband shall each be unaffected by changes of static pressure.

2.4.3.4 Pressure Transmitters

A. Pneumatic transmitters shall be force balance type with 0-100% output receiver gauge.
B. Electronic transmitters shall be two wire, smart type, surge protected, loop powered, strain gauge or capacitance type sensing element with an integral 0-100% output meter.
C. Transmitter bodies shall normally be stainless steel.
D. Where required, pressure transmitters shall be provided with 316 SS pulsation dampers, to ensure reliable service.
E. Absolute pressure transmitters shall be provided where absolute pressure is required (such as surge control, mass flow correction or vacuum pressure measurement).
F. Transmitters shall be provided with diaphragm seals where required to minimize or prevent exposure to corrosive processes or limit contamination.

2.4.3.5 Diaphragm Seals

A. Where specified, pressure instruments shall be equipped either with a diaphragm seal capable of withstanding the erosions and temperatures of the process fluids. Selection of seals shall be approved by BUYER.
B. Diaphragm seal flange shall mate to ASME B16.5 flanges, unless otherwise specified on instrument data sheets. Flange connections shall be 2in unless otherwise specified on data sheets.
C. Capillary will be provided with all seals with lengths specified per the data sheets.
D. Seal fill fluid shall be specified on data sheets.

2.4.4 Temperature Instruments

2.4.4.1 General

A. Each temperature sensor must be installed in a thermowell or protection tube or VENDOR supplied fixture. For pipe installations, immersion shall be selected so that the tip of the sensing element is inserted within the center 1/3 of the pipe, unless required to be shorter by thermowell wake frequency and stress caculations per PTC-19.3-TW. Where thermowells are installed in lines smaller than 3in, the piping shall be expanded to 3in size, or a pipe tee shall be used to accommodate the thermowell.
B. Standard length thermowells shall be used.
C. Refer to API 551 Section 5 for additional information and requirements.
D. Thermocouples and RTDs shall normally be magnesium oxide insulated between sheath and conductors; glass insulation may be used for special applications. Thermocouples shall use minimum 18-gauge wire.
E. Thermocouples and RTDs shall normally have a ¼ in OD SS sheath.

F. Thermocouples and RTDs shall be spring loaded, with copper-free aluminum head, with 3/4in NPT conduit connection, terminal block and ground connection.

2.4.4.2 RTDs

A. RTDs shall be 3-wire or 4-wire, 100-ohm platinum. RTD calibration curve shall comply with ASTM E1137, Grade B.
B. RTDs shall normally be magnesium oxide insulated between the sheath and the conductors; glass insulation may be used for special applications.
C. RTDs for bearing metal temperature measurement shall be spring loaded with a bayonet process connection. These shall be built specifically for measuring bearing metal temperature and shall be tip-sensitive.
D. Flexible RTDs for underground installations may require devices with up to a minimum 48in (4ft) bend radius. Flexible RTDs, where required, shall be provided with minimum bend radius and to Design Basis Drawing as specified on data sheet.
E. RTDs for pipe surface temperature measurement shall be spring loaded. These shall be built specifically for measuring pipe surface temperature and shall be tip-sensitive.

2.4.4.3 Thermocouples

A. Grounded Type E thermocouples shall be used for process temperatures up to +1200°F. Thermocouples shall comply with ASTM-E230/E230M and ASTM-E608/E608M.
B. All thermocouples shall be duplex type. One set of thermocouple leads shall remain as a spare in the event of individual thermocouple burnout, or for a connection to an independent recording device.
C. Ungrounded thermocouples may be used for special applications. Use of ungrounded thermocouples must be approved in writing by BUYER.
D. Thermocouple burnout indication shall be fail-safe.
E. Thermocouple extension wires shall be of the same materials as the corresponding thermocouples. Thermocouple extension wire shall not be spliced.

2.4.4.4 Thermometers

A. Thermometers shall be located where they can easily be read from a walkway or normal operating area. Dial thermometers shall be bimetallic with a 5in dial, adjustable dial angle, stainless steel case, and a hermetically sealed, externally accessible calibration adjustment. Where a line mounted instrument would be difficult to read, thermometers shall be of the capillary type with the gauge mounted for easy viewing.
B. Ranging of the instrument should be that the normal working value lies between 60% and 75% of the full scale of the device. The range shall also be capable of accepting any high transients without any subsequent deterioration in performance.

2.4.4.5 Temperature Transmitters

A. Electronic temperature transmitters shall be two-wire loop powered, surge protected, thermocouple or RTD to current converter. Output shall be 4-20 mA 24 VDC, isolated and linearized for the type of element utilized.

2.4.4.6 Thermowells

A. Thermowell material shall normally be 316 SS minimum. Welded thermowells shall be a material that is compatible with the pipe material for welding purposes.
B. Thermowells shall be machined from solid bar stock, tapered shank, 1in NPT process connection, except as noted below.
C. Thermowells shall have a 1/2in element connection. Thermowells for 1/4in elements shall have a minimum bore diameter of 0.260in., unless otherwise required on instrument data sheets for custom thermowell applications. Thermowells for 5/16in temperature measuring elements shall have a minimum bore diameter of 0.385in. Test wells shall have 0.385in bore diameter.
D. Where specified, welded thermowells shall be used. Welded thermowells installed in pipe with a wall thickness of less than 1in shall be installed in a 1in sockolet. Welded thermowells installed in a pipe with a pipe thickness greater than or equal to 1in shall be at least 1.5in diameter wells. These shall be welded directly into the pipe with a full penetration weld.
E. Flanged-type thermowells shall typically be 1-1/2in RF. Flanges shall be rated per the piping specification with a minimum flange rating of Class 300.
F. Threaded thermowells for insulated lines shall have a lagging extension.
G. Test wells shall be supplied with a plug attached to the test well by a stainless steel chain.
H. Where specified in data sheets, BUYER supplied pre-installed thermowells and extensions will be used.

2.4.4.7 Pipe Clamp Sensor

A. Where specified in data sheets, VENDOR supplied pipe clamp sensor assemblies will be used.

2.4.5 Traps and Drainers

2.4.5.1 Where automated drain valves are not appropriate, continuous drainers or traps shall be used for modulating service in the following instances:

A. Trapping liquids in gas and air streams.
B. Draining condensate.
C. Venting air or gas from liquid streams.

2.4.5.2 Use of traps must be approved by BUYER.

2.4.5.3 Preferred traps for process service shall be the inverted bucket type.

2.4.6 Vibration Switches and Transmitters

2.4.6.1 Vibration switches shall be solid-state switches with an integral 4-20 mA 24 VDC transmitter output.

2.4.6.2 VENDOR shall provide configuration information for interface with BUYER's PCS.

2.4.7 Local Signal Indicator

2.4.7.1 Signal Indicators shall be loop powered 4-20 mA 24 Vdc devices designed to be wired in series with a transmitter.

2.5 Fabrication

2.5.1 Instrument Requirements

2.5.1.1 Welding

A. Welding shall be performed in accordance to CSI Section 40 05 05 33, "Pipe Welding."

2.5.1.2 Mounting

A. All panel-mounted instruments shall be flush mounted.
B. Instruments mounted outdoors shall be surface, yoke, or bracket mounted and shall be protected by weatherproof and heated housings where required.
C. Off-skid local field-mounted panels will be mounted on field-erected concrete pads.
D. Instruments shall be mounted on supports (racks) that will not transmit vibration to the instrument. These supports shall not be mounted on the machinery.

2.5.1.3 Instrument Air Piping and Tubing

A. Instrument air tubing wall thickness shall comply with the requirements of ASME B31.3 and with the requirements of the manufacturer of the compression tube fittings.
B. Instrument Air tubing shall be seamless, 316 stainless steel tubing.
C. Instrument air headers and instrument air lines shall be sloped for drainage of any moisture. Drain valves shall be provided at all low points.
D. Tube fittings for use with stainless steel tubing shall be 316 stainless steel tube fittings.
E. Teflon tape shall not be used for instrument connections. Swagelok SWAK Anaerobic Thread Sealant or equivalent liquid thread dope as approved by BUYER shall be used instead.

2.5.1.4 Electrical Installation

A. All terminal boxes and junction boxes in an area shall conform to the electrical area classification as stated on instrument data sheet.

B. All thermocouple junctions shall be on terminal strips in watertight terminal boxes.
C. All instrument wiring shall be done in a logical and workmanlike manner.
D. Each field mounted digital device shall have an individually fused circuit.
E. Fieldbus junction bricks shall be installed in a junction box or an electronics cabinet. Fieldbus cables may have prefabricated connectors at the instrument, but shall be terminated on a terminal strip at the junction brick. Fieldbus cables shall not be installed with extra length coiled, but shall be cut to proper length upon installation.
F. 3/4in NPT conduit connection are preferred for all instrument, terminal box and junction box electrical interfaces. 1/2in is an accepted secondary preference.

2.5.1.5 Winterization

A. All instruments and control system devices shall be adequately protected, weatherproofed, shielded from the sun, insulated, and heat-traced to maintain acceptable data transmission and integrity at the stated environmental conditions as noted in equipment data sheets. Enclosures are normally located outdoors unless otherwise noted on the equipment data sheet and shall be stainless steel, galvanized, epoxy resin painted, or fiberglass.

2.5.1.6 Finishes

A. All paint shall be suitable for the environment in which the panel will be mounted.
B. Paint in non-corrosive environments shall be a polyurethane paint system suitable for outdoor service.
C. Paint for corrosive environments shall be an epoxy resin coating system, or other paint system as approved by BUYER.
D. Paint shall be applied in strict compliance with the paint manufacturer's instructions.

2.5.2 Panel/Enclosure Requirements

2.5.2.1 General

A. VENDOR shall be responsible for providing panel/enclosures as appropriate for all equipment provided by VENDOR.
B. Panels shall be constructed of sheet steel with framing and reinforcement to insure rigidity and prevent panel sagging, deformation, or buckling during shipment, installation, and seismic service.
C. Panels shall meet seismic service requirement Section 1.8, Site Conditions.
D. Panels shall have an external, permanently attached nameplate with panel identification number and description of panel function engraved on the nameplate.
E. Panels to be located within BUYER enclosure/building shall be designed so that they can be set immediately adjacent to walls or other panels without affecting cooling of components in the panel. No openings for panel ventilation shall be provided in the side panels of panels. No openings for panel ventilation shall be

provided in the back panels of front-entry panels. Any required panel opening for providing circulation of cooling air shall be in the panel doors.

F. Panels for outdoor service shall be rated NEMA 4 stainless steel. Panels for indoor service or inside an environmentally protected enclosure will be NEMA 12 painted. NEMA 4 panels with door clips shall not be supplied without written authorization by BUYER.

G. All control panel doors shall be gasketed. All control panel doors shall include a locking 3-point latch.

H. Panels in classified areas and corrosive areas shall be purged. Panels shall have low pressure switches with a pressure switch to detect purge system failure. Each purged panel shall also be equipped with door position switches to alarm when a panel door is not closed.

I. Panel air conditioners shall be provided as required to maintain the proper environment for instrumentation in the panel. Each instance of use of a panel air conditioner shall require specific written release from BUYER.

J. Panels shall be sandblasted, given a phosphate treatment, and painted. Panel surface preparation, primer coat, and finish coat shall be applied per the paint manufacturer's instructions.

K. External paint color for all panels shall be VENDOR's standard, interior panel finish shall be white.

L. VENDOR's assembly shop shall provide label certifying that control cabinet(s) assembled to meet UL508A, *Industrial Control Panels.*

2.5.2.2 Panel Electrical Requirements

A. Panels to be mounted outdoors shall have the following:

   i. Panels shall be supplied with strip heaters and thermostatic controls. If external power is required, BUYER provided power shall be 120 VAC.

B. All panels including instrument components, electrical wiring and devices must conform to the electrical area classification specified in the equipment data sheets.

C. All wiring, which is internal to the panel assembly, shall be completely connected during system fabrication and testing, and shall not be disconnected before shipment.

D. Space allotted for wiring, field cables, and interconnecting cables shall be arranged so that wiring and cables do not block access to any panel hardware or field terminations to allow for equipment maintenance or removal.

E. All panel mounted equipment shall be attached to the panel structure with machine screws (or bolts), lock washers, and nuts. Use of metal clips or machine screws with metal clips to attach equipment to the panel structure is specifically prohibited.

F. Segregation (by distance or barriers) shall be provided for analog, digital, power cabling and wiring.

G. Wiring and cable shall be neatly dressed with nylon ties and be free from nicks or cuts in the insulation. Plastic slotted duct may also be used as an alternative to nylon ties. All wiring shall be suitably sized for the intended service.

H. Power and signal wiring within panels shall be segregated and separated, and routed to minimize electromagnetic interference. The installation of signal wiring should ensure that "dirty" signals, from potentially noisy plant environments, and noise sensitive signals, e.g. from thermocouples, are suitably separated from other signal wiring. Where specific circumstances may result in a greater likelihood of electromagnetic interference, e.g. cables carrying high frequencies or large currents, then special segregation and separation arrangements, to the specific approval of BUYER or BUYER's representative, shall be applied.

I. Panels shall be designed and built to minimize both the production and susceptibility of equipment to electromagnetic noise.

J. All wiring and insulation within panels shall be flame resistant. Wiring insulation shall be capable of passing the flame test of UL 44, UL 1581, IEEE 383 or other BUYER approved flame test.

K. Where wires are run through holes in metal partitions, the holes shall be equipped with grommets to prevent chafing of insulation.

L. VENDOR shall provide space and supports for panel wiring. Wireways, or other BUYER approved means, shall be used to neatly secure and support wiring. Panel wireways shall not be greater than 50% full.

M. Panel wiring shall not block access for maintenance or removal of any panel mounted hardware.

N. Each wire and cable shall be provided with labels on both ends of the wire or cable.

O. Copper shall be used unless fiber is specified on reference documents.

P. Panels shall be suitable for cable entry from above and below (indoors), and side and below only (outdoors). VENDOR's panel drawings shall show the areas for cable entrance including pertinent dimensions. Separate conduit Entries shall be provided for signal wiring and 120V power wiring.

Q. Field Wiring

   i. All terminations for field wiring shall be made on dedicated terminal blocks.
   ii. Terminations for field wiring accept wire sizes up to 14 AWG for 24 VDC wiring and 12 AWG for 120 VAC. Terminations for field wiring shall be of the compression type.
   iii. Field wiring shall connect to only one side of the terminal blocks.
   iv. Each terminal shall carry no more than 1 wire on either side of the block. If jumpers are required, the terminal shall have no more than 2 wires.
   v. All terminals shall be numbered in accordance with VENDOR's wiring drawings.
   vi. The routing space provided for BUYER's field cables shall not block access to any panel mounted hardware or terminal blocks for maintenance or equipment removal.

R. Interconnecting Cable Requirements (when supplied by VENDOR)

   i. All cables and connectors shall be resistant to heat, moisture, and flame. Insulation for interconnecting cables shall be capable of passing the flame test requirements of Section 2.5.2.2.J, Panel Electrical Requirements or other BUYER approved flame test procedure.

ii. Space shall be allotted for VENDOR's prefabricated cable such that the cable does not block access to any panel mounted device for the purpose of maintenance or removal. The space reserved for VENDOR's prefabricated cable shall not interfere with the space allotted for BUYER's field cables during either installation or normal maintenance functions.

iii. Interconnecting cables between panels that are bolted together into a group shall be run internally to the panel assembly. These cables shall not be disconnected for shipment.

iv. Cable tags shall be permanently attached to each end of each prefabricated cable. The cable shall be provided with indelible designations in accordance with VENDOR's wiring diagrams. Adhesive cable tags are strictly prohibited.

v. PVC insulated cables shall be BUYER approved.

S. Panel Grounding

i. Locknuts with grounding bushings or hubs (waterproof, if mounted outdoors) with ground lugs shall be used on conduit entries.

2.5.3 Prohibited and Hazardous Products

2.5.3.1 VENDOR shall provide no equipment that contains either mercury or asbestos. In the event that no workable substitute is available, VENDOR must obtain a written release from the BUYER on an item-by-item basis before providing any instrumentation or control equipment containing these materials.

2.6 Shop Quality Control

2.6.1 Inspections

2.6.1.1 VENDOR shall submit a Fabrication/Inspection/Test Plan in accordance with Section 1.5.6.2.. VENDOR or lower tier suppliers shall be responsible for qualifying the welding procedures. All welder and weld inspector qualifications and welding and inspection procedures shall be current for the duration of the project work performed.

2.6.1.2 Where EQA data sheets specify process containment as a critical characteristic, weld inspections shall be accordance with CSI Section 40 05 05 33, "Pipe Welding," with the following clarifications:

A. All welds that are performed on process containment components shall have 100% visual examination per ASME B31.3.

B. 100% radiographic examination of pressure boundary welds. If approved by BUYER on a weld-for-weld basis, ultrasonic examination may be substituted for radiography.

C. Liquid penetrant method shall be applied to 100% of all sockets, fillets and attachment welds.

2.6.1.3 Prior to any inspection and testing performed and/or witnessed by BUYER, VENDOR shall perform adequate inspections and tests to ensure that the equipment meets

specifications and is suitable for the intended service. VENDOR's own inspections shall be appropriate for the intended purpose and shall conform to good industry practices and to applicable regulations, codes and standards.

2.6.1.4 VENDOR shall adequately document the inspections and shall maintain adequate files of such information and make such files available to BUYER upon request.

2.6.1.5 All inspection and testing requirements will be in accordance with accepted codes and standards and approved test plans with BUYER's established hold/witness points as identified in the contract documents.

A. Inspections and tests shall be performed by certified / qualified personnel.
B. Calibrated measurement and test equipment shall be used to determine the acceptance of inspections and tests.

2.6.2 Shop Testing

Detailed requirements for shop testing are found in Section 3.5, Demonstration/Testing.

3.0 PART 3 – EXECUTION

3.1 Preparation

3.1.1 Not Used

3.2 Erection, Installation & Application

3.2.1 Not Used

3.3 Field Quality Control

3.3.1 Inspection

3.3.1.1 Detail equipment drawings and inspection records shall be made available for review and approval prior to testing of the equipment. A final equipment inspection and integrated field test shall be conducted.

3.3.1.2 Areas of inspection shall include verification of fabrication, assembly and testing in accordance with VENDOR's procedures.

3.3.1.3 BUYER reserves the right to inspect all phases of test phases.

3.4 Adjusting and Cleaning

VENDOR shall refer to CSI Section 01 66 00, "Delivery, Storage and Handling," for cleaning requirements.

3.5 Demonstration/Testing

3.5.1 VENDOR shall submit an Inspection and Fabrication/Inspection/Test Plan in accordance with Section 1.5.6.2..

3.5.2 All defects in materials, wiring and assembly detected as a result of testing shall be repaired or replaced by the VENDOR at no additional cost to BUYER.

3.5.3 Test results should be recorded and submitted to BUYER. Test results shall be recorded if specified on the data sheets as a requirement.

3.5.4 The VENDOR shall be responsible for performing and documenting all inspections and testing necessary to demonstrate compliance with all relevant specifications, drawings and related standards, as outlined in the Test Plan.

3.5.5 Pressure Testing

3.5.5.1 Device bodies shall be pressure tested per Manufacturer standards to be meet device body rating and in accordance to 1.5.5.3 Quality Assurance Program Manual.

A. Devices shall be pressure tested where required by data sheet.
B. Calibration of device shall be performed after device pressure testing. (Reference section 1.5.9.4.A)

3.6 Protection

3.6.1 Not Used

4.0 LIST OF APPENDICES

4.1 Appendix A - Supporting Documentation Issued with this Specification

Appendix A – Supporting Documentation Issued with this Specification

Data sheets: As provided with the purchase order

SPECIFICATION

19-2-008-2

SAFETY RATED INSTRUMENTS SPECIFICATION

AECOM ATKINS AREVA

LOW ACTIVITY WASTE PRETREATMENT SYSTEM

Project No. 31269 (T5L01)

Document No. 19-2-008-2

CSI Section 40 70 00 02

Safety Related ☒ Non-Safety Related ☐

SAFETY RATED INSTRUMENTS SPECIFICATION

Prepared for

Washington River Protection Solutions, LLC

Revision: 0 Status: Final

HABIB TANIOS FEGHALI
STATE OF WASHINGTON
52852
REGISTERED
PROFESSIONAL ENGINEER

5/16/2017

FOR PERMITTING
HTF 5/16/2017

AECOM ATKINS AREVA

Project Number: 31269 (T5L01)
Doc. No.: 19-2-008-2
Date: May 17, 2017
Revision: 0

REVISION PAGE

Project Name:	LAWPS	**Discipline:**	19
Client:	Washington River Protection Solutions	**Project Number:**	31269 (T5L01)
		Latest Revision:	0

REVISION SIGNATURES

D. Horn Daniel Horn	Digitally signed by Daniel Horn Date: 2017.05.15 07:05:10 -06'00'	H. Feghali Habib Feghali	Digitally signed by Habib Feghali DN: cn=Habib Feghali, o=AECOM, ou=Management Services, email=habib.feghali@aecom.com, c=US Date: 2017.05.15 15:15:16 -06'00'
Prepared by	**Date**	**Approved by (SDE/Lead)**	**Date**
J. Brinkley John Brinkley	Digitally signed by John Brinkley Date: 2017.05.15 08:36:27 -06'00'	P. Bell Paul Bell	Digitally signed by Paul Bell Date: 2017.05.15 15:38:07 -06'00'
Checked by	**Date**	**Approved by (QA)** For DP	**Date**
B. Din Bernard S Din	Digitally signed by Bernard S Din DN: cn=Bernard S Din, o=AECOM, ou, email=bernard.din@aecom.com, c=US Date: 2017.05.15 15:23:26 -06'00'	D. Priebe Michael Schultze	Digitally signed by Michael Schultze Date: 2017.05.15 18:48:46 -06'00'
Verified by (if required)	**Date**	**Approved by (PEM)**	**Date**

Status	Rev. No.	Date	Prepared By	Pages	Description of Changes
Final	0	5/17/2017	DPH	All	Approved for Bid

Safety Related: Yes ☒ No ☐	**Quality Level:** Full QA ☒ Enhanced QA ☐ Commercial QA ☐

TABLE OF CONTENTS

1.0 PART 1 - GENERAL 1

1.1 Section Scope 1
1.2 Related Sections 1
1.3 Codes and Standards 1
1.4 System Description 4
1.5 Submittals 5
1.6 Delivery, Storage & Handling 10
1.7 Quality Assurance 11
1.8 Site Conditions 13

2.0 PART 2 – PRODUCTS 14

2.1 Manufacturers 14
2.2 Material 14
2.3 Equipment 14
2.4 Components 18
2.5 Fabrication 27
2.6 Shop Quality Control 32

3.0 PART 3 - EXECUTION 34

3.1 Preparation 34
3.2 Erection, Installation & Application 34
3.3 Field Quality Control 34
3.4 Adjusting And Cleaning 34
3.5 Demonstration/Testing 34
3.6 Protection 36

4.0 LIST OF APPENDICES 37

4.1 Appendix A - Supporting Documentation Issued with this Specification 37

LIST OF TERMS

Abbreviations and Acronyms

Term	Definition
API	American Petroleum Institute
ASME	American Society of Mechanical Engineers
ASTM	American Society for Testing and Materials
AVL	Approved Vendors List
AWG	American Wire Gauge
B&PV	Boiler and Pressure Vessel Code
CFR	Code of Federal Regulations
CGD	Commercial Grade Dedication
CGI	Commercial Grade Item
CMTR	Certified Material Test Reports
CoC	Certificate of Conformance
COTS	Commercial-off-the-shelf
CQA	Commercial Quality Assurance
CSI	Construction Specifications Institute
CWI	Certified Welding Inspector
DOE	U. S. Department of Energy
EQA	Enhanced Quality Assurance
FMEDA	Failure Modes, Effects, and Diagnostics Analysis
FQA	Full Quality Assurance
GA	General Arrangement
HART	Highway Addressable Remote Transducer
IEC	International Electrotechnical Commission
IEEE	Institute of Electrical and Electronics Engineers
I/O	Input/Output
ILAC	International Laboratory Accreditation Cooperation
ISA	International Society of Automation
ISO	International Organization for Standardization
LAWPS	Low Activity Waste Pretreatment System
LCD	Liquid Crystal Display
NACLA	National Cooperation for Laboratory Accreditation
NCSL	National Conference of Standards Laboratories
NEC	National Electric Code
NDE	Nondestructive Examination
NEMA	National Electrical Manufacturers Association
NFPA	National Fire Protection Association
NPS	Nominal Pipe Size

Term	Definition
NPT	National Pipe Thread
NRTL	Nationally Recognized Testing Laboratory
OSHA	Occupational Safety and Health Administration
PCS	Process Control System
PDF	Portable Document Format
PSSH	Packaging, Storage, Shipping, and Handling
QA	Quality Assurance
QAIP	QA Inspection Plan
RF	Raised Face
RFI	Request for Information
SDC	Seismic Design Criteria
SDS	Safety Data Sheet
SIL	Safety Integrity Level
SIS	Safety Instrumented System
SS	Safety Significant, Stainless Steel
SWC	Surge Withstand Capability
TBD	To Be Determined
TBV	To Be Verified
UL	Underwriters Laboratories
WAC	Washington Administrative Code
WRPS	Washington River Protection Solutions, LLC

Units

Unit	Description
°C	Degree Centigrade
°F	Degree Fahrenheit
A	Ampere
CFM	Cubic Feet per Minute
cP	Centipoise
Ft	Foot
Ft^2	Square Foot
GPM	Gallons per Minute
Hz	Hertz
In	Inch
In^2	Square Inch
inH_2O	Inches of Water Column
Lb	Pound
Lb/Ft^3	Pound per Cubic Foot
Lb/Hr	Pound per Hour
mA	Milliampere
ohm	Electrical Resistance
psia	Pounds per Square Inch (absolute)
psid	Pounds per Square Inch (differential)
psig	Pounds per Square Inch (gauge)
RH	Relative Humidity
VAC	Voltage Alternating Current
VDC	Voltage Direct Current

Definitions

BUYER – The company for whom the VENDOR is performing work or services.

COMMERCIAL QUALITY ASSURANCE (CQA) – Level of controls for those items, services or processes where, based on an evaluation of risk or nuclear safety, no additional quality controls beyond the provider's published or stated attributes of the item, service, or process is required.

DESIGN CHANGE – Within the context of this specification, a DESIGN CHANGE is technically equivalent to a SUBSTITUTION (see SUBSTITUTION). However, the term DESIGN CHANGE may be used to refer to more significant changes to the design compared to a simple substitution.

DEVIATION – Any departure from the requirements contained in the purchase order and specification which VENDOR proposes to incorporate if approved by BUYER.

ENHANCED QUALITY ASSURANCE (EQA) – Level of controls for those items, services, or processes where, based on an evaluation of risk or nuclear safety, additional controls beyond the provider's published or stated attributes of the item, service or process are needed to verify critical attributes.

FULL QUALITY ASSURANCE (FQA) – Level of controls applied for items services, or processes that are commensurate with the controls invoked under ASME NQA-1 or other appropriate national consensus standard.

HANDLING – The movement or transportation of items following receipt from offsite/ project locations. This includes movement within storage areas and movement/transportation from receipt or storage areas to field locations. Handling requirements include the need for special handling tools and equipment, restrictions on material composition of surfaces in contact with the item, protection against damage or deterioration, which could occur during movement and placement, protection against physical damage due to excessive shock or vibration, and protection against entry of dirt, water, or other contaminants.

HOLD POINT – A Mandatory inspection activity beyond which work shall not proceed until (1) the inspection is performed by an independent inspector and/or BUYER and acceptance is authenticated, or (2) a written release is authorized by the organization who established the hold point.

MANUFACTURER – The Party responsible for making the product.

MORE CONSERVATIVE – "More conservative" shall be interpreted as "more protective of the health, safety and well-being of Site workers and facilities, the public, and environment, as applicable."

NONCONFORMANCE – A deficiency in characteristic, documentation, or procedure that renders the quality of an item or activity unacceptable or indeterminate.

PROCUREMENT QUALITY CLAUSES (QA CLAUSES) – Procurement quality clauses are to be used for the acquisition of items and services. The clauses establish contractual obligations for quality program systems, identification, traceability, documents submittals, testing, reporting, qualification, special process controls, inspections, etc.

PRODUCT DATA – Printed information including, but not limited to, catalog cuts, color charts, illustrations, diagrams, templates, performance curves, brochures, and other forms of Product literature.

QUALITY ASSURANCE RECORDS – Quality assurance plans, procedures, and records, including completed documents that furnish evidence of the quality of an item or activities affecting quality.

SHALL / MUST – Denotes project requirements, compliance is required.

SHIPPING – The movement of items from an off-site/project location (VENDOR, warehouse, etc.) to an on-site/project location, or movement from an onsite/ project location to an off-site/project

location. Shipping requirements include packaging and securing of items to protect against damage or deterioration which could occur during movement and transportation, protection against physical damage due to excessive shock or vibration, protection against entry of dirt, water, or other contaminants, and protection against other environmental conditions such as temperature or humidity.

SHOULD – Denotes recommendation or expectation, compliance is expected.

SPECIFICATION – Refers to any design, fabrication or supply specification.

STORAGE – Holding of items in areas that address: the probable maximum period to be held, the inherent physical limitations of the item itself, and required protection from potential hazards such as fire, corrosion, chemical attack and environmental conditions. Storage also includes the requirements for maintaining the integrity and operability of items through routine maintenance, cleaning, or other means of preservation.

SUBSTITUTION – Any change or deviation from issued approved drawings, designs, methods, or contract terms and conditions. Changes in products, materials, equipment, methods of construction, and test criteria required by the Contract Documents proposed by the VENDOR after award of the Contract are considered to be requests for substitution.

VENDOR – The company responsible for the supply of equipment and/or services.

WITNESS POINT – An inspection activity beyond which work shall not proceed until an inspector and/or BUYER is notified and (1) the inspection is performed and released, or (2) the inspection is deferred and can be completed at a later time, or (3) a written waiver is issued by the organization who established the witness point.

1.0 PART 1 - GENERAL

1.1 Section Scope

1.1.1 This specification covers engineering, design, fabrication, shipping and delivery for safety rated instrumentation for the Low Activity Waste Pretreatment System (LAWPS) Project (Project T5L01).

1.1.2 This specification applies to all instrumentation and accessories furnished by the instrumentation VENDOR.

1.1.3 This document serves to define the minimum requirements for instrumentation elements applied on the LAWPS project.

1.1.4 VENDOR shall assume complete responsibility for the design, fabrication, inspection, testing and shipping, including all documentation as required by BUYER and detailed in the purchase order and this specification.

1.2 Related Sections

1.2.1 The following related documents contain additional instrumentation requirements:

01 25 00	Substitutions and Design Changes
01 33 00	Submittals
01 40 00	Quality Assurance
01 60 00	Labeling
01 66 00	Delivery, Storage, and Handling
01 81 02	Safety Natural Phenomena Hazard Performance Requirements
40 05 05 33	Pipe Welding

1.2.2 Should there be any conflicts/discrepancies amongst these documents, this specification and/or datasheets; the VENDOR shall request a written resolution from the BUYER or BUYER's representative.

1.3 Codes and Standards

1.3.1 Work shall be performed in accordance with the referenced codes, standards, and documents for this specification.

1.3.2 The following codes and standards, of the exact issue shown, form part of the BUYER basis of design to the extent specified in the applicable sections of this document. In the event of a conflict between documents referenced herein and the requirements of this specification, the requirements of this specification shall take precedence only when this specification's requirements are more stringent or conservative. If a code or standard not listed below is to be applied to the scope (see Section 1.1), apply the latest code or standard as of April 16, 2015.

VENDOR shall state, with proposal, any exceptions to these standards that, in VENDOR's opinion, are not applicable in whole or part.

1.3.3 In addition to Codes and Standards listed herein, all materials and workmanship shall be in accordance with all applicable US and local jurisdiction laws, codes and regulations.

1.3.4 Government Documents

1.3.4.1 DOE – United States Department of Energy
- DOE Order 414.1D, *Quality Assurance*

1.3.4.2 OSHA – Occupational Safety and Health Administration
- 29 CFR 1910 (2012)

1.3.4.3 Washington Administrative Code (WAC)
- 296-46B-010, *Inspections*
- 296-46B-903, *Equipment Standards*
- 296-46B-997, *Engineer Approval*
- 296-46B-999, *Electrical Testing Laboratory Requirements*

1.3.5 Non-Government Documents

1.3.5.1 ASME - American Society of Mechanical Engineers
- ASME B16.5 (2013), *Pipe Flanges and Flanged Fittings NPS ½ Through NPS 24 Metric/Inch Standard*
- ASME B16.36, (2009), *Orifice Flanges*
- ASME B31.3 2012, *Process Piping*
- ASME B40-100 (2013), *Pressure Gauges and Gauge Attachments*
- ASME Boiler and Pressure Vessel Code (B&PV) Section II Pt C (2013), *Specifications for Welding Rods, Electrodes, and Filler Metals*
- ASME B&PV Section IX (2013), *Boiler and Pressure Vessel Code - Welding and Brazing Qualifications*
- ASME MFC-3M (2004) (addendum 2007) *Measurement of Fluid Flow in Pipes Using Orifice, Nozzle, and Venturi*
- ASME MFC-5.1 (2011) *Measurement of Liquid Flow in closed Conduits Using Transit-Time Ultras Sonic Flowmeters*
- ASME MFC-6M (2013) *Measurement of Fluid Flow in Pipes Using Vortex Flow Meters*
- ASME MFC-11 (2014) *Measurement of Fluid flow by Means of Coriolis Mass Flowmeters*
- ASME MFC-12M (2014) *Measurement of Fluid Flow in Closed Conduits Using Multiport Averaging Pitot Primary Elements*
- ASME MFC-14M (2008) *Measurement of Fluid Flow Using Small Bore Precision Orifice Meters*
- ASME MFC-16 (2014) *Measurement of Liquid Flow in Closed Circuits with Electromagnetic Flowmeters*
- ASME MFC-18M (2011) *Measurement of Fluid Flow using Variable Area Meters*

- ASME MFC-21.2 (2010) *Measurement of Fluid Flow by means of Thermal Dispersion Mass Flowmeters*
- ASME NQA-1, (2008) (2009 Addenda), *Quality Assurance Requirements for Nuclear Facility Applications*
- ASME PTC-19.1 (2013), *Test Uncertainty Instruments and Apparatus*
- ASME PTC-19.2 (2010), *Pressure Measurement Instruments and Apparatus Supplement*
- ASME PTC-19.3 (2010) TW, Thermowell *Performance Test Codes*
- ASME PTC-19.5 (2013), *Flow Measurement*

1.3.5.2 API - American Petroleum Institute

- API RP 551 (2007), *Process Measurement Instrumentation*
- API 598 (2009), *Valve Inspection and Testing*

1.3.5.3 ASTM - American Society for Testing and Materials

- ASTM E230/E230M (2012), *Standard Specification and Temperature-Electromotive Force (emf) Tables for Standardized Thermocouples*
- ASTM E585 2012, *Standard Specification for Mineral-Insulated, Metal-Sheathed Base Metal Thermocouple Cable*
- ASTM E608/E608M (2013), *Standard Specification for Mineral-Insulated, Metal-Sheathed Base Metal Thermocouples*
- ASTM E1137/E1137M (2014), *Standard Specification for Industrial Platinum Resistance Thermometers*

1.3.5.4 IEC – International Electrotechnical Commission

- IEC 61508 (2010), *Functional Safety of Electrical/Electronic/ Programmable Electronic Safety-Related Systems*

1.3.5.5 IEEE – Institute of Electrical and Electronics Engineers

- IEEE C37.90 (2011), *Relays and Relay Systems Associated with Electric Power Apparatus*
- IEEE C37.90.1 2012, *Guide for Surge Withstand Capability (SWC) Tests*
- IEEE 344 (2013), *Standard for Seismic Qualification of Equipment for Nuclear Power Generating Stations*
- IEEE 383 (2008), *Standard for Type Test for Qualifying Electric Cables and Splices for Nuclear Facility*
- IEEE 384 (2008), *Standard Criteria for Independence of Class 1E Equipment and Circuits*

1.3.5.6 ISA – The International Society of Automation

- ISA 5.1 (2009), *Instrumentation Symbols and Identification*
- ISA 5.4 (1991), *Instrument Loop Diagrams*
- ISA 12.10 (1988), *Area Classification in Hazardous (Classified) Dust Locations*
- ISA 12.12.01 (2013), *Nonincendive Electrical Equipment for Use in Class I and II, Division 2 and Class III, Divisions 1 and 2 Hazardous (Classified) Locations*
- ISA 60079-29-1 (2013), *Explosive Atmospheres – Part 29-1: Gas Detectors – Performance requirements of detectors for flammable gases*

- ISA 20, (1981), *Specification Forms for Process Measurement and Control Instruments, Primary Elements and Control Valves*
- ISA 12.04.04 (2012), *Pressurized Enclosure*
- ISA TR5.1.01/TR77.40.01 (2012), *Functional Diagram Usage*
- ANSI/ISA 84,00.01 Part 1 (IEC 61511-1 Mod) (2004), *Functional Safety: Safety Instrumented Systems for the Process Industry Sector*

1.3.5.7 ISO/IEC – International Organization for Standardization / International Electrotechnical Commission

- ISO/IEC 17025 (2005), *General Requirements for the Competence of Testing and Calibration Laboratories*

1.3.5.8 NCSL – National Conference of Standards Laboratories

- NCSL Z540-3 (2006), *Requirements for the Calibration of Measuring and Test Equipment*

1.3.5.9 NEMA – National Electrical Manufacturers Association

- NEMA ICS 1 (2000), (reaffirmed 2010), *Industrial Control and Systems: General Requirements*
- NEMA ICS 6 (1993), (reaffirmed 2011), *Industrial Controls and Systems: Enclosures*
- NEMA 250 (2014), *Enclosures for Electrical Equipment (1000 Volts Maximum)*

1.3.5.10 NFPA – National Fire Protection Association

- NFPA 70 (2014), *National Electric Code*

1.3.5.11 UL – Underwriters Laboratories

- UL-44 (2014), *Rubber and Insulated Wires and Cables*
- UL-1581 (2001), *Standard for Safety Reference Standard for Electrical Wires, Cables, and Flexible Cords*
- UL-508A (2013), *Industrial Control Panels*

1.3.6 Non-Code of Record Documents/Related Documents/Drawings

See Section 1.2, Related Sections.

1.4 System Description

1.4.1 Description

The instrumentation that falls under the scope of supply of this specification is as follows:

1.4.1.1 Instrumentation as defined on the instrument data sheets listed in Appendix A Supporting Documents.

1.4.1.2 All accessories, materials, and methods of fabrication not specifically addressed in this Specification, but which are necessary to provide complete instrument as defined on the data sheets. This selection shall be carried out in accordance with good engineering practices subject to written approval by BUYER.

1.5 Submittals

1.5.1 Submittals that are listed within this section shall be prepared and processed in accordance with requirements of CSI Section 01 33 00 "Submittals" and shall include all of the required Quality Assurance documentation in accordance with CSI Section 01 40 00 "Quality Assurance" of this specification.

1.5.2 Instrumentation and controls drawing symbols, legend, and terminology shall comply with guidelines of ISA-5.1 and ISA-51.1.

1.5.3 Final Data Package submittal items listed in Section 1.5.9 shall be submitted and approved by the BUYER prior to release for shipment.

1.5.4 Calculations and drawings should be prepared in accordance with VENDOR procedures.

1.5.5 The following documents shall be submitted with the Proposal Package:

1.5.5.1 Project Schedule

1.5.5.2 Drawing List

1.5.5.3 Quality Assurance Program Manual per NQA-1-2008/2009 Addendum

A. Suspect/Counterfeit Items Program per DOE O 414.1D, Attachment 3 Submit certification against the procurement of potentially suspect or counterfeit items (i.e., all supplied materials shall be genuine, new, and unused), in accordance with QA Clause B76.

1.5.5.4 For Safety Related (FQA) items, the VENDOR shall meet the requirements of the BUYER's Commercial Grade Dedication (CGD) plan.

1.5.5.5 Instrument List

1.5.5.6 General Arrangements

1.5.5.7 SIS Safety Manuals and Diagnostic Data (Reference Section 2.3.2) (where applicable)

1.5.6 The following final design review package documents shall be submitted for Review and Approval prior to releasing the equipment for fabrication.

1.5.6.1 Calculations

A. Seismic criteria compliance per Sections 1.8.1.3 and 3.5.6.

B. For thermowells, VENDOR shall provide calculations in accordance with ASME PTC-19.3-TW for BUYER's review and approval to determine that the wake frequency is not greater than 66% of the thermowell resonant frequency and that fatigue and bending stress are within appropriate limits.
C. Instrument sizing

1.5.6.2 Fabrication/Inspection/Test Plan in accordance with QA Clause B13.

A. The vendor as a minimum shall incorporate BUYER's QA Inspection Plan (QAIP) inspections and reviews into VENDOR's Inspection and Test Plan.
B. This plan shall include lower tier VENDORs and subcontractor's names and locations where fabrication, inspection, installation and testing will be performed.
C. The VENDOR's Inspection and Test Plan shall incorporate all inspections requirements of the BUYER's Commercial Grade Dedication (CGD) plan.

1.5.6.3 Instrument Data Sheets

A. Data sheets shall be supplied in accordance with QA Clause B33.
B. BUYER shall verify that instrument manufacturer model number is complete with all necessary options and components. BUYER shall provide any purchase order specific model option numbers as part of Instrument Data Sheets.

1.5.6.4 Drawings

A. Dimensioned general arrangement (GA) drawings.
B. Wiring termination documentation shall include but are not limited to, detail electrical schematics, electrical wiring diagrams, power distribution and grounding diagrams, termination schedules, input/output (I/O) schedule, label details, system configuration details and supplied cable details.

1.5.6.5 Manufacturers Data – Cabinets & Enclosures

A. Catalog cut sheets showing model information and ratings in accordance with QA Clause B33.
B. Seismic Qualification Documentation (if any).

1.5.6.6 Welding Qualifications/Controls

A. Weld Procedure Specifications and Weld Procedure Qualification Records shall be provided for all welds that are performed on process containment components, in accordance with QA Clause B28.
B. Welder Qualification Records shall be provided for personnel that perform project work, in accordance with QA Clause B28.
C. American Weld Society Certified Welding Inspector (CWI) Qualifications Records will be provided for personnel that perform project work in accordance with QA Clause B25.
D. Nondestructive Examination (NDE) Procedures will be provided in accordance with QA Clause B31.

E. NDE Personnel Qualification Records will be provided for personnel that perform project work, in accordance with QA Clause B31.
F. Records of Annual Visual Acuity Examinations for all ASME B31.3, weld and NDE examination personnel.
G. Material Control Procedures shall be provided to ensure prevention of component and weld rods/fillers material contamination, particularly stainless steel cross contamination with carbon steel and halogens.

1.5.6.7 Certified Electrical Inspector Qualifications Records will be provided for personnel that perform project work in accordance with QA Clause B17.

1.5.6.8 Failure Modes, Effects, and Diagnostics Analysis (FMEDA) documentation (where required).

1.5.6.9 Calibration records shall be submitted in accordance with QA Clause B12.

1.5.7 Technical Submittals

1.5.7.1 VENDOR Proposal Package (Reference Section 1.5.5)

1.5.7.2 List of Fabrication Codes and Standards

1.5.7.3 Request for Information (RFI)
- RFI shall be submitted on BUYER supplied form A-6003-417.

1.5.7.4 Final Design Review Package (Reference Section 1.5.6)

1.5.7.5 Nonconformance Reports/Deficiency Reports

A. Non-conformance reports shall be approved in accordance with QA Clause B22.

1.5.8 Delivery Storage and Handling

1.5.8.1 Packaging, Storage, Shipping & Handling (PSSH) Plan in accordance with QA Clause B85.

1.5.8.2 Site Assembly Instructions for each device.

1.5.8.3 Cleaning Plan

1.5.9 Final Lifetime Records

The VENDOR shall prepare a documentation Final Data Package for each item, comprised of the following:

1.5.9.1 Certificates of Conformance (COCs) & Signature Verification Sheets

A. To demonstrate compliance with the Codes and Standards, VENDOR shall ensure that these products are supplied with a Certificate of Conformance in accordance with QA Clause B79.

B. Certificate of Conformance shall certify that devices are new and not used, and comply with the requirements herein. Certificate of Conformance shall also certify the manufacturing standard that applies to the valves and the COC references the corresponding purchase order.
C. Certificate of Conformance shall be provided confirming device firmware/software to FMEDA (reference Section 1.5.9.4.D) (where applicable).

1.5.9.2 Certified Material Test Reports (CMTRs)

A. CMTRs shall be supplied in accordance with QA Clause B49.
B. Instrument components and accessories (e.g. flanges) that provide for process containment shall be supplied with CMTRs.
C. Filler Material, weld wire and electrode CMTRs for all welds performed on process containment components.
D. Wetted materials critical to instrument measurement functions (e.g. orifice plates, magnetic meter lining protectors, guided wave radar probe).

1.5.9.3 Weld Documentation

A. Weld maps.
B. Weld Inspection Reports in accordance with QA Clause B52: All welds that are performed on process containment components shall be 100% visual examination per ASME B31.3.
C. Weld History Reports in accordance with QA Clause B52: All welds that are performed on process containment components shall have weld history maintained and logged.
D. Nondestructive Inspection Reports in accordance with QA Clause B31 and section 2.6.1.2.
E. Liquid Penetrant Material Certification, in accordance with QA Clause B46 and section 2.6.1.2.

1.5.9.4 Certificates and Reports

A. Certification of Calibration shall be submitted for instrumentation in accordance with QA Clause B61. Calibration documentation indicating instrument and/or control device calibrated, setpoints, calibration results (including "As Found," and "As Left" data), test curves, test reports, and calibration technicians initials, and date of calibration
B. Pressure Test Reports in accordance with QA Clause B52. Reports shall include as a minimum design pressure or working pressure, full test pressure, hold times, halogen content of water used in testing, temperature of water during the test, and pressure gauge range.
C. Final Inspection Reports in accordance with QA Clause B52.
D. FMEDAs are to be supplied as part of this section.
E. Seismic test reports (if applicable) in accordance with QA Clause B52.
F. Calibration certificates for Vendor owned instruments and measurement equipment used during testing, in accordance with QA Clause B12.

G. Flame test reports for insulated wiring (if applicable), in accordance with QA Clause B55.
H. Certification against the procurement of potentially suspect or counterfeit items (i.e., all supplied materials shall be genuine, new, and unused), in accordance with QA Clause B76.

1.5.9.5 Nonconformance Reports shall be approved in accordance with QA Clause B22.

1.5.9.6 Manufacturers/VENDORS Data

A. Data sheets on all instruments shall be supplied in accordance with QA Clause B33.
   i. All items shall be labeled with a part number/model number in accordance with QA Clause B32.
   ii. All electrical panels and electrical equipment shall be listed by a Nationally Recognized Testing Laboratory (NRTL) and labeled in accordance with QA Clause B65.

B. Safety Data Sheets (SDS) shall be provided where available. SDS shall be compliant to OSHA 29 CFR 1910 requirements.
C. Installation and instruction manuals for all instruments and accessories including but not limited to: operation, installation and maintenance.
D. Firmware/Software Records and Licenses
E. Safety Manuals for all instruments and for accessories that can affect safety function of instruments.
F. Recommended spare parts listing in accordance with QA Clause B82.

1.5.9.7 Calculations (reference Section 1.5.6.1)

1.5.9.8 As-Built Drawings

A. Provide block diagrams and engineering drawings. Drawings shall delineate instruments, equipment panels and contain complete parts lists with VENDOR's part number, quantities and material descriptions.
B. Enclosure layout drawings; exterior and interior (if applicable).
C. System power and grounding diagrams.
D. Wiring diagrams showing cables, wiring, and wiring terminations. Wiring diagrams shall delineate termination panels for field devices.
E. Diagrams shall show operation of equipment/systems in enough detail to provide clear understanding and permit troubleshooting of installation.
F. Designate field installed wires with numbers or letter and retain same designation throughout, independent of splices at terminal blocks.
G. All drawings shall be submitted in native and Portable Document Format (PDF).

1.6 Delivery, Storage & Handling

1.6.1 After acceptance of shop test by BUYER, VENDOR shall disconnect all equipment and prepare the items for shipment per CSI Section 01 66 00, "Delivery Storage and Handling," as appropriate to specified level of protection.

1.6.2 VENDOR shall submit a PSSH per Section 1.5.8.1, Packaging, Storage, Shipping & Handling (PSSH) Plan in accordance with QA Clause B85.

1.6.3 VENDOR shall receive, clean, package, store, preserve, handle, and ship equipment to protect against physical damage, or any effect that would affect quality or cause deterioration at all times while items are located on the VENDOR's premises in accordance with ASME NQA-1-2008/2009A, *Quality Assurance Requirements for Nuclear Facility Applications*, Part II, Subpart 2.2.

1.6.4 Classification of items and packaging will follow the guidelines of ASME NQA-1. Components shall be classified as Level B Items.

1.6.5 Panels shall be suitably packed or crated to ISA-RP60.11 standards so as to be protected from damage during shipment.

1.6.6 VENDOR shall provide installation instructions per Section 1.5.9.6, Manufacturers/VENDORS Data.

1.6.7 All interconnecting cables shall be labelled at each end specifying panel, terminal panel and plug-in receptacle to which cable is to be reconnected.

1.6.8 VENDOR shall be responsible for ensuring that no physical damage to equipment occurs during transit to the plant and field sites.

1.6.9 Firmware and software program discs (if applicable) shall be separately packaged and mailed by insured express mail to BUYER. Two separate identical copies shall be mailed in separate packages to ensure that at least one of them is delivered to the proper person.

1.6.10 VENDOR shall advise on requirements for storage of equipment at site prior to installation.

1.6.11 Instruments and Panels shall be crated, boxed or otherwise protected against damage or loss during shipment, and to facilitate field handling.

1.6.12 Butt weld ends and flanges shall be protected with either wood, wood fiber or plastic covers. All female threaded and socket weld openings shall be closed with either plastic or metal plugs. Covers or caps containing fluorides, chlorides, sulfur, lead, zinc, copper and mercury are not allowed on stainless steel ends.

1.6.13 Loose components shall be securely attached to the unit or be shipped separately in a box.

1.7 Quality Assurance

1.7.1 Applicable QA Clauses are summarized in the table below. The full QA Clause definition and associated requirements are located in CSI Section 01 40 00, "Quality Assurance".

Table 1.7-1 Procurement Quality Clause

SUPPLIER FABRICATION
B12 Supplier Use of Calibrated Equipment
B13 Fabrication/Inspection/Test Plan
B16 Source Inspection
B17 Certified Electrical Inspector (Non-NEC-IAEI)
B22 Nonconformance Documentation and Reporting
B25 Certified Weld Inspector (CWI)
B28 Welding Procedures and Qualifications
B31 Nondestructive Examination Process
MATERIAL IDENTIFICATION
B32 Identification of Items with Part number/Model number
B33 Identification of Items with Catalog Cut
TESTING AND TEST DATA
B37 Identification and Traceability of Items
B46 Liquid Penetrant Material Certification
B49 Certified Material Test Report
B52 Inspection and Test Report
B55 Flame Test Report
B61 Certification of Calibration
B65 Nationally Recognized Testing Laboratory (NRTL) Listed or Labeled
INSPECTION AND ACCEPTANCE CRITERIA
B76 Procurement of Potentially Suspect or Counterfeit Items
B79 Certificate of Conformance
B82 Recommended Spare Parts Listing
MATERIAL HANDLING
B85 Packaging/Shipping Procedures

1.7.2 The verification points, required by Table 1.7-2, shall be in accordance with CSI Section 01 40 00, "Quality Assurance," and verified by the BUYER, as applicable.

1.7.3 The VENDOR shall implement and maintain a quality system in accordance with the applicable elements of the selected version of ASME NQA-1.

1.7.4 The VENDOR shall implement and maintain a calibration system in accordance with ISO/IEC 17025:2005, *General Requirements for the Competence of Testing and Calibration Laboratories*; or as an alternative, a calibration system that complies with NCSL Z540-3, *Requirements for the Calibration of Measuring and Test Equipment*. The contractor may accept accreditation of the VENDOR's calibration system if the identified accredited body is recognized by either the National Cooperation for Laboratory Accreditation (NACLA) or the International Laboratory Accreditation Cooperation (ILAC) in lieu of Contractor review and approval.

1.7.5 VENDOR shall allow BUYER or BUYER's representative access to their and / or any lower tier supplier's facility and records pertaining to this procurement for the purpose of Quality Assurance Audits and surveillance at mutually agreed times. Source inspections will be performed in accordance with QA Clause B16.

1.7.6 VENDOR labor shall be appropriately qualified for tasks by education, experience, and certifications.

1.7.7 Upon completion, VENDOR shall provide as electronic files all submittal documents/information as detailed in CSI Section 01 33 00, "Submittals."

1.7.8 Unless otherwise specified, items required by the Purchase Order shall be procured directly from the original manufacturer or an authorized master distributor. Items delivered under this Purchase Order will be inspected by the BUYER for indications of suspect or counterfeit or fraudulent conditions. Detection by the BUYER of any suspect or counterfeit item leading to evidence of deliberate misrepresentation of any supplied item may result in an investigation into the validity of certification, fraud, and/or forgery. Reference DOE Order 414.1D, Attachment 3, Suspect/Counterfeit Items Prevention.

1.7.9 The following verification points required by this section shall be in accordance with CSI Section 01 40 00, "Quality Assurance," verified by the BUYER, as applicable.

1.7.9.1 At a minimum, the following witness and hold points for instrumentation and controls shall apply:

Table 1.7-2 Hold and Witness Point Verification

Verification Point Description	Type of Verification
Prior to Fabrication	Hold
First Article Inspection	Hold
Prior to Purchase	Hold
Prior to Inspections	Witness

Verification Point Description	Type of Verification
Calibration/Testing	Hold
Prior to Shipping	Hold

1.7.10 The VENDOR shall provide required notifications of verification points in accordance with CSI Section 01 40 00, "Quality Assurance," as applicable, and shall not proceed past required hold points without written authorization from the BUYER QA representative

1.8 Site Conditions

1.8.1 VENDOR's equipment shall be suitable for operation in the conditions of service as stated below:

Instruments data sheets shall specify ambient conditions for instrument locations.

1.8.1.1 The LAWPS site design site conditions are as follows:

- Outdoor temperature: -25°F to 115°F
- Outdoor relative humidity: 0 – 100%
- Barometric pressure: 14.35 psia (measured at a meteorological tower 733 feet above sea level)

1.8.1.2 The LAWPS site indoor conditions are to be maintained as follows:

- Normal Operational Indoor temperature: 60°F to 120°F +/-10°F
- Off-Normal Indoor temperature: 20°F to 140°F
- Normal Operational Indoor relative humidity: 5% to 70% RH @ Normal Operational Indoor Temperature Above
- Off-Normal Indoor relative humidity: 5% to 100% RH @ Off-Normal Indoor Temperature Above

1.8.1.3 Seismic service shall be to CSI Section 01 81 02, "Safety Natural Phenomena Hazard Performance Requirements".

A. Panels and instruments shall as a minimum shall meet seismic requirements designated on the instrument data sheets.
B. Instruments designated on instrument data sheets as SS for Confinement (conf_SS) are not required to function or fail to safe state during or after the test.
C. Safety rated instruments, designated on instrument data sheets as SS, with Limit State D seismic requirements, shall meet specified SDC requirements with equipment either functioning after the test or failing to safe state during or after the test.

2.0 PART 2 – PRODUCTS

2.1 Manufacturers

2.1.1 Sub-contracting to other manufacturers is to be in accordance with the procurement package.

2.1.2 Materials which are specified by manufacturer and/or proprietary name on instrument data sheets are so specified only for the purpose of establishing the type and standard of quality required. The manufacturer and/or proprietary names do not preclude the use of BUYER-approved substitutes. Where names of manufacturers are listed, the order of listing is not indicative of an order of preference. All substitutions shall be accompanied with manufacturer's catalog data.

2.2 Material

2.2.1 The instruments, controls and software supplied shall be industry standard, commercial off-the-shelf, and be part of an existing product line.

2.2.2 All products shall be new and unused. Items not specified herein or on the drawings shall be new and of the highest quality of their respective kinds.

2.2.3 The use of non-combustible and limited-combustible materials is required to the fullest extent possible. Where there is an opportunity to choose between readily available materials, non-combustible and limited-combustible materials shall be selected.

2.2.4 VENDOR shall standardize on components used to the greatest extent possible.

2.2.5 Inline devices shall be provided with radiation compatible materials that are not subject to deterioration based on data sheet specified lifetime dose rate for device.

2.2.6 Marking materials and liquid penetrant materials used on austenitic stainless steels and nickel base alloys shall not cause corrosive or other harmful effects.

2.3 Equipment

2.3.1 General Requirements

2.3.1.1 All instrumentation and control devices shall be suitable for continuous operation under the design environmental conditions and area classification.

2.3.1.2 Location of all instruments shall be planned for accessibility and removal.

2.3.1.3 All instruments shall be calibrated before shipment. A calibration sticker shall be attached to each instrument and/or control device with the technician's initials and date of calibration.

2.3.1.4 All alarm switches shall operate with actuating contacts closed for normal process conditions. Abnormal process conditions shall cause relays to de-energize and contacts to open. Multifunction alarms shall be avoided.

2.3.1.5 Engineering Units (Units of Measurement)

Engineering Units for all instrumentation and control equipment shall be US customary units. The following are some of the common units used:

Table 2.3-1 Engineering Units

Unit Description	Unit
Area	In^2, Ft^2
Density	Lb/Ft^3
Flow (mass)	Lb/Hr
Flow (volumetric)	GPM, CFM
Length	In, Ft
Level	%, In, Ft
Mass	Lb
Pressure (absolute)	psia
Pressure (gage)	psig
Pressure (differential)	psid, in H_2O
Temperature	°F
Viscosity	cP

2.3.1.6 Process connections for instrumentation shall conform to this specification.

2.3.1.7 Analog control instrumentation that interfaces with the main plant control equipment shall use isolated 4-20 mA 24 VDC.

2.3.1.8 All process transmitters supplied by VENDOR shall be 4-20 mA 24 VDC transmitters with HART communication and shall be equipped with surge protection.

2.3.1.9 Process transmitters shall have an integral LCD display, where available from vendor.

2.3.1.10 VENDOR shall provide one configuration and calibration device for each manufacturer's transmitter type.

2.3.1.11 Flow measuring device calculations shall be prepared by the VENDOR using customary U.S. measurement units. Charts, scales, and other documents covered by this Specification shall also be in U.S. customary measurement units.

2.3.1.12 All elastomers (liners, gasketing, packing, etc.) shall be compatible with the process service and radiation environment as defined on the datasheets.. Teflon components should be avoided in radiation zones and must be approved by BUYER prior to use.

2.3.1.13 All alarm or shutdown switches shall have hermetically sealed, dual, Form C contacts with a minimum rating of 10A resistive at 120 VAC, 0.5A resistive at 125 VDC, or 3A resistive at 28 VDC.

2.3.1.14 All electro-mechanical switch contacts used with interrogation voltages under 120 VAC shall have gold flashed contacts.

2.3.1.15 Mercury switches shall not be used.

2.3.1.16 The measuring element shall be able to with stand a differential pressure equal to the maximum body rating without significantly affecting calibration.

2.3.1.17 Process sensing lines shall be NPS ½ unless otherwise stated in data sheets.

2.3.1.18 Welds that provide process containment or that include components that provide process containment shall be provided with certifications per CSI Section 40 05 05 33, "Pipe Welding". These certifications shall include but are not limited to the following:

- Filler Material, weld wire and electrode CMTRs.
- Welder qualifications
- Weld procedures and/or specification
- Weld examination inspection records
- NDE Inspector certification / qualification records

2.3.1.19 Instrument data sheets will specify local ionizing radiation levels. Materials and electronics shall be provided to withstand these required levels.

2.3.1.20 Transmitter housing will preferably have two compartments to separate the electronics from the field connections.

2.3.1.21 Instruments shall meet seismic service requirements as stated on data sheets. (Reference Sections 1.8.1.3 and 3.5.6)

2.3.1.22 Instruments shall meet standard tolerances for respective referenced instrument type specific codes unless specific tolerance requirements are stated on the data sheets.

2.3.1.23 FQA devices shall be provided with the following Final Lifetime Records submittals as a minimum:

A. CoCs in accordance with Section 1.5.9.1
A. Certificates of Calibration in accordance with Sections 1.5.9.4.A and 1.5.9.4.F
B. Data Sheets, Drawings and Manufacturers/VENDORS data in accordance with Sections 1.5.6.3, 1.5.6.4, 1.5.6.5 and 1.5.9.6
C. Calculations in accordance with Sections 1.5.6.1. and 1.5.9.7
D. Reports in accordance with Section 1.5.9.4.C, 1.5.9.4.E, 1.5.9.4.G and 1.5.9.4.H
E. Where devices are designated with critical characteristic: process containment, the following additional submittals shall be provided:

   i. Welding Procedures, Qualifications and Documentation in accordance with Sections 1.5.6.6 and 1.5.9.3.
   ii. CMTRs in accordance with Section 1.5.9.2.
   iii. Reports in accordance with Section 1.5.9.4.B.

F. Where devices are designated with critical characteristic: (process condition) measurement, the following additional submittals shall be provided:

   i. Certified Electrical Inspector Qualifications Records in accordance with Sections 1.5.6.7
   ii. Reports in accordance with Sections 1.5.5.9 and 1.5.9.4.E.
   iii. CoCs in accordance with Section 1.5.9.1.C

2.3.2 Safety rated instruments designated on instrument data sheets as SS shall be certified to IEC 61508 (2010), Functional Safety of Electrical/Electronic/ Programmable Electronic Safety Related Systems.

2.3.2.1 FMEDA certification shall be provided by a certified third party laboratory.

2.3.2.2 Instruments as a minimum shall meet the reliability data specified on the instrument data sheet

2.3.2.3 Diagnostics

A. Instruments that are designated on instrument data sheets as SS shall have diagnostic coverage to IEC 61508 requirements.
B. BUYER shall supply diagnostic coverage data. This shall include but not be limited to:
   - List of Detectable Faults
   - Diagnostic Coverage ratio

2.3.3 For FQA designated instruments with critical characteristic: process containment the following shall apply:

2.3.3.1 All materials and items used in the construction of the devices shall be identified and traceable, in accordance with QA clauses B32 and B37.

2.3.4 Electrical Requirements

2.3.4.1 The equipment and its installation shall meet the area electrical classification stated on the Equipment Data Sheets.

2.3.4.2 All electrical designs shall comply with NFPA 70, *National Electrical Code* (NEC), and Washington Administrative Code (WAC) requirements.

2.3.4.3 All system grounds shall comply with the NEC requirements.

2.3.4.4 External instrument power, if required from BUYER, shall be provided as 120 VAC.

2.3.4.5 At no time shall any voltage in excess of 125 VDC or 120 VAC, 60 Hz be allowed in any instrument/control systems panel without express written release from BUYER.

2.3.5 Identification and Marking

2.3.5.1 Instruments and control components shall be permanently labelled with identification numbers in accordance with tags identified in data sheets and drawings.

2.3.5.2 Wire identification: VENDOR shall clearly and permanently label internal panel wiring as shown on VENDOR's termination wiring diagrams.

2.3.5.3 Each instrument shall have a stainless steel nameplate attached. Nameplates shall include at least the manufacturer's name, figure number, serial number and size.

2.3.5.4 All Instrument and accessory labels shall be provided and affixed to instrument in accordance with CSI Section 01 60 00, "Labeling".

2.3.5.5 Designate wires with numbers or letters and retain same designation throughout, independent of splices at terminal blocks.

2.3.5.6 All thermowells shall have the instrument tag number stamped or engraved on the well so that the number is plainly visible when the well is installed in the pipe with pipe insulation installed.

2.3.5.7 Panel tubing bulkhead fittings shall be tagged with the instrument tag number.

2.3.6 Maintainability

2.3.6.1 Equipment shall have access panels where replacement of parts or component maintenance is necessary.

2.3.6.2 The design shall incorporate installed test connections, jacks and plugs for testing and calibration.

2.3.7 Critical Characteristics

Component critical characteristics of performance are stated on respective data sheets with associated required documentation.

2.3.8 Security

2.3.8.1 Transmitters shall be provided with security features to meet ISA 84, *Functional Safety: Safety Instrumented Systems for the Process Industry Sector*, Clause 11, Section 11.6.4 to prevent inadvertent modifications. These features may include but are not limited to:

- Security switches or jumpers
- Software/Firmware lockout or password protection
- Removal or deactivation of configuration buttons

2.4 Components

2.4.1 Flow Instruments

2.4.1.1 General

A. Orifice, flow nozzle, and venturi calculations shall be performed in accordance with ASME or "Flow Measurement Engineering Handbook," by Richard W. Miller, as appropriate.

B. Maximum allowable turndown for differential pressure type flow meters shall not exceed 5.0 to 1. Normally, it is preferred that turndown not exceed 4.0 to 1. Where larger turndowns are required, VENDOR shall confirm device accuracy and repeatability.
C. In the final documentation data sheets, VENDOR shall specify the actually measured internal pipe diameters, orifice bores, and Beta ratios with an accuracy of ±0.001in. Beta ratios shall be between 0.25 and 0.7. VENDOR shall provide flow calculations at the measured flow element bore.
D. For liquid service and for gas service greater than 100 psia, differential pressure measurement spans shall be at least 100 inH_2O at the designed flow rate, unless otherwise approved by the BUYER. Differential pressure measurement span shall not exceed 400 inH_2O.
E. For gas service, orifice design differential pressure range in inH_2O shall not exceed the magnitude of the process static pressure in psia.
F. Differential pressure transmitters shall have stainless steel sensing parts unless process service conditions require other materials.
G. All differential pressure flow transmitters shall be installed with a stainless steel 5-valve manifold equalizing assembly. Electronic transmitters shall mount directly to the manifold.
H. Pipe section upstream and downstream lengths from a flowmeter shall be based on requirements of the governing standard or the flowmeter manufacturer's recommendations, whichever is longer.
I. Flow instrumentation application and installation shall meet the requirements of API 551 except where modified by this specification.
J. Square Root Extraction used on differential pressure type flowmeters will be performed in the LAWPS Process Control System (PCS) or Safety instrument System (SIS), and not in the flow transmitter.
K. Horizontal installation of flowmeters is preferred and vertical installation should be avoided wherever possible. Meter runs may be installed vertically only if:
   - The process fluid is liquid and the flow is upwards.
   - The process fluid is gas and the flow is downwards.
   - Vertical installation is required by the type of flow instrument

2.4.1.2 Orifice Plates

A. Orifice plates for flow measurement shall be concentric, square-edged orifice plates meeting the requirements of ASME-MFC-3M or ASME PTC-19.5.
B. For wet gases or dirty fluids, eccentric orifice plates may be used upon written release by BUYER.
C. Orifice plate material shall be 316 SS or a material that is more corrosion resistant and wear resistant as required by the process.
D. Orifice plates shall have shall have the following information stamped or engraved on the upstream side of the orifice plate:
   - Tag Number
   - Plate Material
   - Line Size
   - Orifice Bore

- Flange Pressure Rating
- The word "Inlet"

E. All orifices shall be bored to the nearest 1/8in. , unless otherwise required on instrument data sheets.
F. Orifice flanges shall comply with ASME B16.36. Minimum pressure rating for orifice flanges shall be ASME class 300 flanges.
G. Orifice flanges shall be raised face (RF) flanges.
H. Orifice flanges shall be weldneck flanges. Slip-on flanges are prohibited.
I. Orifices in services that require frequent inspection shall be installed in a junior orifice fitting.
J. Orifices in services requiring that the orifice plate be inspected or changed while the meter run is in service shall use senior orifice fittings.
K. Flow measurement orifices 1-1/2in or smaller shall normally be supplied as integral orifice flowmeters.

2.4.1.3 Flow Nozzles

A. Flow nozzle material shall be 316 SS minimum.
B. Flow nozzles shall meet the requirements of ASME-MFC-3M or ASME PTC-19.5.

2.4.1.4 Venturis

A. Venturis shall meet the requirements of ASME-MFC-3M or ASME PTC-19.5.

2.4.1.5 Coriolis Mass Flowmeters

A. Coriolis meters shall meet the requirements of ASME- MFC-11.
B. Display shall be provided with Coriolis meter with the following features as a minimum:
   - Flow rate display
   - Totalized flow display
   - Manual or remote reset
   - Flow-no flow indication
   - Diagnostic failure indication
   - Power-On Indication

C. Coriolis meters, where specified, shall provide density data to PCS.
D. Coriolis meters, where remote transmitters are specified, option for remote mounting elements core processor shall also be provided with distance limitation to the transmitter and element.
E. VENDOR shall provide all cabling between Coriolis meter components.
F. Coriolis meters shall be provided with the Smart Meter Verification (SMV) feature. Where SMV cannot be included in the model number on instrument data sheets, SMV to be provided through Engineered to Order Program, with field activation / set up.

2.4.1.6 Magnetic Flowmeters

A. Magnetic flow tube shall be lined with a material suitable for the application. The liner shall be attached to the tube such that the partial or full vacuum will not cause the liner to collapse. The field coils and cores shall be field replaceable without removing the tube from the line and without affecting calibrated accuracy.
B. Electrode type and material shall be based on data sheet process conditions and notes.
C. Magnetic flow meters, where required, may have remote transmitters specified. Interconnecting wiring from remote housing to transmitter shall be provided to data sheet specified length. Remote transmitters shall be provided with mounting bracket and hardware.
D. Magnetic flow meter process connections shall be weldneck RF flanges. Flanges shall be rated per the piping specification.
E. Separate sealed electrode housing shall be used where option is available.
F. Lining protectors shall be provided. Material shall be BUYER approved.
G. Magnetic flow meters shall be equipped with an internal, adjustable low flow cut off. Below selected value, the output shall be driven to zero flow signal.
H. Magnetic flow meters shall meet the requirements of ASME- MFC-16.

2.4.1.7 Vortex Flowmeters

A. Vortex Meters shall meet the requirements of ASME- MFC-6M.
B. Vortex Meters shall be equipped with an internal, adjustable low flow cut off. Below selected value, the output shall be driven to zero flow signal.

2.4.2 Level Instruments

2.4.2.1 General

A. Differential pressure level instruments shall be provided with a stainless steel, 5-valve manifold, unless diaphragm seals are required on instrument data sheet.
B. Use of any level instrument with a radioactive element is prohibited.
C. Instrument Preferences (where appropriate for application):
   i. Non-contacting radar devices shall be first preference in tanks within the vaults and pits. Guided wave radar devices are a secondary preference for waste services.
   ii. Differential pressure level devices shall be first preference in above ground tanks.
D. Level instrumentation application and installation shall meet the requirements of API 551 except where modified by this specification.
E. Level transmitter probe connections shall be RF flanges. Flanges shall be rated per the piping specification.

2.4.2.2 Displacer and Float Type Level Devices

A. For services below 600 psig, magnetic float level gauges, transmitters, and switches on a single column may be provided in place of separate level devices.
B. For general liquid services, local level instruments may be of the external displacement or float type and shall be of the conventional torque tube type. Devices shall have a minimum level range of 14in, and shall have a maximum level range of 48in.
C. Block, vent and drain valves shall be supplied. 1/2in shall be standard valve size. Other sizes must be approved by BUYER.
D. Flanged float assemblies shall be provided to allow access to the float mechanism for maintenance.
E. Differential pressure and displacement-type level instruments shall have bodies and trim suitable for process fluid conditions and temperatures. Minimum trim materials shall be stainless steel, unless other material specified on data sheets.

2.4.2.3 Non-Contacting Radar

A. Non-contacting radar installations shall be mounted in BUYER supplied stilling wells. The stilling wells as a minimum shall be 3 NPS.

2.4.2.4 Guided Wave Radar

A. Guided wave radar installations may be mounted in BUYER supplied stilling wells. The stilling wells as a minimum shall be 3 NPS.
B. Flexible probes mounted in stilling wells shall be provided with centering discs. VENDOR shall provide number and spacing requirements for each device.
C. Non-contacting radar devices, where required, may have remote transmitters specified. Interconnecting wiring from remote housing to transmitter shall be provided to data sheet specified length. Remote transmitters shall be provided with mounting bracket and hardware.
D. End weights shall be provided by VENDOR for flexible probes.
E. VENDOR shall provide probes to specified lengths. Probes are not to be provided as a field cut probe.

2.4.2.5 Gauge Glasses

A. Magnetic level gauges are preferred to gauge glasses and shall be used wherever codes allow this substitution to be made.
B. All gauge glasses shall be of the reflex type with the exception of the following, which shall be of the transparent type with illuminators:
   i. Liquids containing any type of sediment that can coat the inner surface of the reflex glass.
   ii. Liquids at temperatures of 32°F or less. All gauges of this type shall also be equipped with frost shields and be large chamber type.
   iii. Solvent service.
   iv. Three-phase production separators.

v. Mica shields and large chambers shall be used on boiling liquids and condensate.

C. Tubular Pyrex glasses may be used only on vessels or tanks that are at atmospheric pressure and then these may be used only with specific written permission from BUYER. Where tubular Pyrex glasses are permitted, at least four vertical protection bars shall be used to protect the glass from damage.
D. For level gauge installation, the standard gauge glass section length shall have 12-5/8in visible. A maximum of 4 sections may be used in one gauge assembly.
E. Liquid level gauge cocks shall be of the ballcheck, offset, easy cleanout type with a union or flanged connection, 1/2in NPT gauge and 3/4in union process connections.

2.4.3 Pressure Instruments

2.4.3.1 General

A. Primary pressure elements shall be stainless steel for all pressure instruments unless conditions of service require otherwise. Aluminum pressure containing parts shall not be used.
B. Pressure instruments shall be provided with 5 or 2-valve manifolds or block and bleed valves. Minimum acceptable manifold and valve material is 316 SS.
C. Pressure instrumentation application and installation shall meet the requirements of API 551 except where modified by this specification.

2.4.3.2 Pressure Gauges

A. Pressure gauges shall be 4-1/2in dial, solid front safety case type with blowout back, 1/2in NPT bottom connection, plastic or drawn stainless steel case, 316 SS bourdon and socket, stainless steel movement, micrometer pointer. When physical conditions require it, a 1/2in NPT back male connection can be provided.
B. Dials shall be plastic or aluminum, white background with black dial and delineations.
C. 316 SS pulsation dampeners shall be provided for pulsating pressure services. Filled gauges shall not be used without written release from BUYER.
D. A siphon shall be provided for all close-coupled gauges in steam service. Gauges mounted below the instrument tap that have a significant run of impulse tubing need not have a siphon.
E. Ranging of the instrument should be that the normal working value lies between 60% and 75% of the full scale of the device. The range shall also be capable of accepting any high transients without any subsequent deterioration in performance.
F. Measuring element shall withstand an overpressure of 1.3 x full scale (and full vacuum when specified) without having any effect on the calibration.
G. Pressure gauges with diaphragm seals shall be supplied completely assembled and filled. The diaphragm shall be welded to the body so that the fluid will not escape when the diaphragm is disassembled.

2.4.3.3 Pressure Switches

A. Pressure switches installed shall be capable of sensing full line pressure without damage or affecting calibration.
B. Dedicated switches shall be provided for all shutdowns.
C. Hermetically sealed, dual Form C contacts shall be supplied on all field mounted pressure switches. Electrical leads on factory sealed switches shall be at least 18in long and labeled to identify normally open, normally closed, and common leads. For low pressure applications where dual Form C contacts are unavailable, or where a dual Form C switch unit would produce an unacceptably wide deadband, a single Form C switch may be use with written release from the BUYER.
D. Overpressure protection shall be provided for 150% of maximum range setting on all pressure switches and 150% of normal static head for all differential pressure switches.
E. For differential pressure switches, the setpoint and the deadband shall each be unaffected by changes of static pressure.

2.4.3.4 Pressure Transmitters

A. Pneumatic transmitters shall be force balance type with 0-100% output receiver gauge.
B. Electronic transmitters shall be two wire, smart type, surge protected, loop powered, strain gauge or capacitance type sensing element with an integral 0-100% output meter.
C. Transmitter bodies shall normally be stainless steel.
D. Where required, pressure transmitters shall be provided with 316 SS pulsation dampers, to ensure reliable service.
E. Absolute pressure transmitters shall be provided where absolute pressure is required (such as surge control , mass flow correction or vacuum pressure measurement).
F. Transmitters shall be provided with diaphragm seals where required to minimize or prevent exposure to corrosive processes or limit contamination.

2.4.3.5 Diaphragm Seals

A. Where specified, pressure instruments shall be equipped either with a diaphragm seal capable of withstanding the erosions and temperatures of the process fluids. Selection of seals shall be approved by BUYER.
B. Diaphragm seal flange shall mate to ASME B16.5 flanges, unless otherwise specified in instrument data sheet. Flange connections shall be 2in unless otherwise specified on data sheets.
C. Capillary will be provided with all seals with lengths specified per the data sheets.
D. Seal fill fluid shall be specified on data sheets.

2.4.4 Temperature Instruments

2.4.4.1 General

A. Each temperature sensor must be installed in a thermowell, protection tube or VENDOR supplied fixture. For pipe installations, immersion shall be selected so that the tip of the sensing element is inserted within the center 1/3 of the pipe, unless required to be shorter by thermowell wake frequency and stress calculations per PTC-19.3-TW. Where thermowells are installed in lines smaller than 3in, the piping shall be expanded to 3in size, or a pipe tee shall be used to accommodate the thermowell.
B. Standard length thermowells shall be used.
C. Refer to API 551 Section 5 for additional information and requirements.
D. Thermocouples and RTDs shall normally be magnesium oxide insulated between sheath and conductors; glass insulation may be used for special applications. Thermocouples shall use minimum 18-gauge wire.
E. Thermocouples and RTDs shall normally have a 1/4in OD SS sheath.
F. Thermocouples and RTDs shall be spring loaded, with copper-free aluminum head, with 3/4in NPT conduit connection, terminal block and ground connection.

2.4.4.2 RTDs

A. RTDs shall be 4-wire, single element, 100-ohm platinum.. RTD calibration curve shall comply with ASTM E1137, Grade B.
B. RTDs shall normally be magnesium oxide insulated between the sheath and the conductors; glass insulation may be used for special applications.
C. RTDs for bearing metal temperature measurement shall be spring loaded with a bayonet process connection. These shall be built specifically for measuring bearing metal temperature and shall be tip-sensitive.
D. Flexible RTDs for underground installations may require devices with up to a minimum 48in (4ft) bend radius. Flexible RTDs, where required, shall be provided with minimum bend radius and to Design Basis Drawing as specified on data sheet.
E. RTDs for pipe surface temperature measurement shall be spring loaded. These shall be built specifically for measuring pipe surface temperature and shall be tip-sensitive.

2.4.4.3 Thermocouples

A. Grounded Type E thermocouples shall be used for process temperatures up to +1200°F. Thermocouples shall comply with ASTM-E230/E230M and ASTM-E608/E608M.
B. All thermocouples shall be duplex type. One set of thermocouple leads shall remain as a spare in the event of individual thermocouple burnout, or for a connection to an independent recording device.
C. Ungrounded thermocouples may be used for special applications. Use of ungrounded thermocouples must be approved in writing by BUYER.
D. Thermocouple burnout indication shall be fail-safe.

E. Thermocouple extension wires shall be of the same materials as the corresponding thermocouples. Thermocouple extension wire shall not be spliced.

2.4.4.4 Thermometers

A. Thermometers shall be located where they can easily be read from a walkway or normal operating area. Dial thermometers shall be bimetallic with a 5in dial, adjustable dial angle, stainless steel case, and a hermetically sealed, externally accessible calibration adjustment. Where a line mounted instrument would be difficult to read, thermometers shall be of the capillary type with the gauge mounted for easy viewing.
B. Ranging of the instrument should be that the normal working valve lies between 60% and 75% of the full scale of the device. The range shall also be capable of accepting any high transients without any subsequent deterioration in performance.

2.4.4.5 Temperature Transmitters

A. Electronic temperature transmitters shall be two-wire loop powered, surge protected, thermocouple or RTD to current converter. Output shall be 4-20 mA 24 VDC, isolated and linearized for the type of element utilized.

2.4.4.6 Thermowells

A. Thermowell material shall normally be 316 SS minimum. Welded thermowells shall be a material that is compatible with the pipe material for welding purposes.
B. Thermowells shall be machined from solid bar stock, tapered shank, 1in NPT process connection, except as noted below.
C. Thermowells shall have a 1/2in element connection. Thermowells for 1/4in elements shall have a minimum bore diameter of 0.260in. , unless otherwise required on instrument data sheets for custom thermowell applications. Thermowells for 5/16in temperature measuring elements shall have a minimum bore diameter of 0.385in. Test wells shall have 0.385in bore diameter.
D. Where specified, welded thermowells shall be used. Welded thermowells installed in pipe with a wall thickness of less than 1in shall be installed in a 1in sockolet. Welded thermowells installed in a pipe with a pipe thickness greater than or equal to 1in shall be at least 1.5In diameter wells. These shall be welded directly into the pipe with a full penetration weld.
E. Flanged-type thermowells shall be 1-1/2In RF. Flanges shall be rated per the piping specification with a minimum flange rating of Class 300.
F. Threaded thermowells for insulated lines shall have a lagging extension.
G. Test wells shall be supplied with a plug attached to the test well by a stainless steel chain.
H. Where specified in data sheets, BUYER supplied pre-installed thermowells and extensions will be used.

2.4.4.7 Pipe Clamp Sensor

A. Where specified in data sheets, vendor supplied pipe clamp sensor assemblies will be used.

2.4.5 Traps and Drainers

2.4.5.1 Where automated drain valves are not appropriate, continuous drainers or traps shall be used for modulating service in the following instances:

A. Trapping liquids in gas and air streams.
B. Draining condensate.
C. Venting air or gas from liquid streams.

2.4.5.2 Use of traps must be approved by BUYER.

2.4.5.3 Preferred traps for process service shall be the inverted bucket type.

2.5 Fabrication

2.5.1 Instrument Requirements

2.5.1.1 Welding

A. Welding shall be performed in accordance to CSI Section 40 05 05 03, "Pipe Welding".

2.5.1.2 Mounting

A. All panel-mounted instruments shall be flush mounted.
B. Instruments mounted outdoors shall be surface, yoke, or bracket mounted and shall be protected by weatherproof and heated housings where required.
C. Off-skid local field-mounted panels will be mounted on field-erected concrete pads.
D. Instruments shall be mounted on supports (racks) that will not transmit vibration to the instrument. These supports shall not be mounted on the machinery.

2.5.1.3 Instrument Air Piping and Tubing

A. Instrument air tubing wall thickness shall comply with the requirements of ASME B31.3 and with the requirements of the manufacturer of the compression tube fittings.
B. Instrument Air tubing shall be seamless, 316 stainless steel tubing.
C. Instrument air headers and instrument air lines shall be sloped for drainage of any moisture. Drain valves shall be provided at all low points.
D. Tube fittings for use with stainless steel tubing shall be 316 stainless steel tube fittings.

E. Teflon tape shall not be used for instrument connections. Swagelok SWAK Anaerobic Thread Sealant or equivalent liquid thread dope as approved by BUYER shall be used instead.

2.5.1.4 Electrical Installation

A. All terminal boxes and junction boxes in an area shall conform to the electrical area classification as stated on instrument data sheet.
B. All thermocouple junctions shall be on terminal strips in watertight terminal boxes.
C. All instrument wiring shall be done in a logical and workmanlike manner.
D. Each field mounted digital device shall have an individually fused circuit.
E. Fieldbus junction bricks shall be installed in a junction box or an electronics cabinet. Fieldbus cables may have prefabricated connectors at the instrument, but shall be terminated on a terminal strip at the junction brick. Fieldbus cables shall not be installed with extra length coiled, but shall be cut to proper length upon installation.
F. 3/4in NPT conduit connection are preferred for all instrument, terminal box and junction box electrical interfaces. 1/2in is an accepted secondary preference.
G. Where safety rated instruments, designated on instrument data sheets as Safety Significant (SS), provide for both SS and non-SS circuits, IEEE 384 *Standard Criteria for Independence of Class 1E Equipment and Circuits* separation shall be applied as follows:

    i. SS terminals and cable entries shall require physical separation spacing of 1In in the horizontal and 3In in the vertical from Non-SS terminals and cable entries.
    ii. Separate cable conduit entry shall be provided for SS and non-SS cables.
    iii. VENDOR provided wiring shall maintain the separation distance stated in section i for any customized wiring provided to meet this specification and data sheet requirements. Note: This requirement does not apply to VENDOR standard wiring practices for their instruments.
    iv. Location of cable entries and terminals shall permit separation distance stated in section i to be maintained during field installation of BUYER cables and wires.

2.5.1.5 Winterization

A. All instruments and control system devices shall be adequately protected, weatherproofed, shielded from the sun, insulated, and heat-traced to maintain acceptable data transmission and integrity at the stated environmental conditions as noted in equipment data sheets. Enclosures are normally located outdoors unless otherwise noted on the equipment data sheet and shall be stainless steel, galvanized, epoxy resin painted, or fiberglass.

2.5.1.6 Finishes

A. All paint shall be suitable for the environment in which the panel will be mounted.
B. Paint in non-corrosive environments shall be a polyurethane paint system suitable for outdoor service.
C. Paint for corrosive environments shall be an epoxy resin coating system, or other paint system as approved by BUYER.
D. Paint shall be applied in strict compliance with the paint manufacturer's instructions.

2.5.2 Panel/Enclosure Requirements

2.5.2.1 General

A. VENDOR shall be responsible for providing panel/enclosures as appropriate for all equipment provided by VENDOR.
B. Panels shall be constructed of sheet steel with framing and reinforcement to insure rigidity and prevent panel sagging, deformation, or buckling during shipment, installation, and seismic service.
C. Panels shall meet seismic service requirement Section 1.8, Site Conditions.
D. Panels shall have an external, permanently attached nameplate with panel identification number and description of panel function engraved on the nameplate.
E. Panels to be located within BUYER enclosure/building shall be designed so that they can be set immediately adjacent to walls or other panels without affecting cooling of components in the panel. No openings for panel ventilation shall be provided in the side panels of panels. No openings for panel ventilation shall be provided in the back panels of front-entry panels. Any required panel opening for providing circulation of cooling air shall be in the panel doors.
F. Panels for outdoor service shall be rated NEMA 4 stainless steel. NEMA 4 panels with door clips shall not be supplied without written authorization by BUYER.
G. All control panel doors shall be gasketed. All control panel doors shall include a locking 3-point latch.
H. Panels in classified areas and corrosive areas shall be purged. Panels shall have low pressure switches with a pressure switch to detect purge system failure. Each purged panel shall also be equipped with door position switches to alarm when a panel door is not closed.
I. Panel air conditioners shall be provided as required to maintain the proper environment for instrumentation in the panel. Each instance of use of a panel air conditioner shall require specific written release from BUYER.
J. Panels shall be sandblasted, given a phosphate treatment, and painted. Panel surface preparation, primer coat, and finish coat shall be applied per the paint manufacturer's instructions.
K. External paint color for all panels shall be VENDOR's standard, interior panel finish shall be white.
L. VENDOR's assembly shop shall provide label certifying that control cabinet(s) assembled to meet UL508A, Industrial Control Panels.

2.5.2.2 Panel Electrical Requirements

A. Panels to be mounted outdoors shall have the following:

   i. Panels shall be supplied with strip heaters and thermostatic controls. If external power is required, BUYER provided power shall be 120 VAC.

B. All panels including instrument components, electrical wiring and devices must conform to the electrical area classification specified in the equipment data sheets.

C. All wiring, which is internal to the panel assembly, shall be completely connected during system fabrication and testing, and shall not be disconnected before shipment.

D. Space allotted for wiring, field cables, and interconnecting cables shall be arranged so that wiring and cables do not block access to any panel hardware or field terminations to allow for equipment maintenance or removal.

E. All panel mounted equipment shall be attached to the panel structure with machine screws (or bolts), lock washers, and nuts. Use of metal clips or machine screws with metal clips to attach equipment to the panel structure is specifically prohibited.

F. Segregation (by distance or barriers) shall be provided for analog, digital, power cabling and wiring.

G. Wiring and cable shall be neatly dressed with nylon ties and be free from nicks or cuts in the insulation. Plastic slotted duct may also be used as an alternative to nylon ties. All wiring shall be suitably sized for the intended service.

H. Power and signal wiring within panels shall be segregated and separated, and routed to minimize electromagnetic interference. The installation of signal wiring should ensure that "dirty" signals, from potentially noisy plant environments, and noise sensitive signals, e.g. from thermocouples, are suitably separated from other signal wiring. Where specific circumstances may result in a greater likelihood of electromagnetic interference, e.g. cables carrying high frequencies or large currents, then special segregation and separation arrangements, to the specific approval of BUYER or BUYER's representative, shall be applied.

I. Panels shall be designed and built to minimize both the production and susceptibility of equipment to electromagnetic noise.

J. All wiring and insulation within panels shall be flame resistant. Wiring insulation shall be capable of passing the flame test of UL 44, UL 1581, IEEE 383 or other BUYER approved flame test.

   i. Where wiring to IEEE 383 is designated on data sheets, flame test reports shall be provided per Section 1.5.9.4.G.

K. Where wires are run through holes in metal partitions, the holes shall be equipped with grommets to prevent chafing of insulation.

L. VENDOR shall provide space and supports for panel wiring. Wireways, or other BUYER approved means, shall be used to neatly secure and support wiring. Panel wireways shall not be greater than 50% full.

M. Panel wiring shall not block access for maintenance or removal of any panel mounted hardware.

N. Each wire and cable shall be provided with labels on both ends of the wire or cable.
O. Copper shall be used unless fiber is specified on reference documents.
P. Panels shall be suitable for cable entry from above and below (indoors), and side and below only (outdoors). VENDOR's panel drawings shall show the areas for cable entrance including pertinent dimensions.
Q. Field Wiring

   i. All terminations for field wiring shall be made on dedicated terminal blocks.
   ii. Terminations for field wiring accept wire sizes up to 14 AWG for 24 VDC wiring and 12 AWG for 120 VAC. Terminations for field wiring shall be of the compression type.
   iii. Field wiring shall connect to only one side of the terminal blocks.
   iv. Each terminal shall carry no more than 1 wire on either side of the block. If jumpers are required, the terminal shall have no more than 2 wires.
   v. All terminals shall be numbered in accordance with VENDOR's wiring drawings.
   vi. The routing space provided for BUYER's field cables shall not block access to any panel mounted hardware or terminal blocks for maintenance or equipment removal.

R. Interconnecting Cable Requirements (when supplied by VENDOR)

   i. All cables and connectors shall be resistant to heat, moisture, and flame. Insulation for interconnecting cables shall be capable of passing the flame test requirements of Section 2.5.2.2.J, Panel Electrical Requirements or other BUYER approved flame test procedure.
   ii. Space shall be allotted for VENDOR's prefabricated cable such that the cable does not block access to any panel mounted device for the purpose of maintenance or removal. The space reserved for VENDOR's prefabricated cable shall not interfere with the space allotted for BUYER's field cables during either installation or normal maintenance functions.
   iii. Interconnecting cables between panels that are bolted together into a group shall be run internally to the panel assembly. These cables shall not be disconnected for shipment.
   iv. Cable tags shall be permanently attached to each end of each prefabricated cable. The cable shall be provided with indelible designations in accordance with VENDOR's wiring diagrams. Adhesive cable tags are strictly prohibited.
   v. Interconnecting cables, where specified on data sheets as being located in high radiation zones, shall be radiation resistant to the dose rate stated on the data sheet.
   vi. Use of PVC insulated cables shall be BUYER approved.

S. Panel Grounding

   i. Locknuts with grounding bushings or hubs (waterproof, if mounted outdoors) with ground lugs shall be used on conduit entries.

T. Where safety rated instruments, designated on instrument data sheets as SS, and related panels provide for both SS and non-SS circuits, IEE 384 separation shall be applied as stated in Section 2.5.1.4.G.i.

2.5.3 Prohibited and Hazardous Products

2.5.3.1 VENDOR shall provide no equipment that contains either mercury or asbestos. In the event that no workable substitute is available, VENDOR must obtain a written release from the BUYER on an item-by-item basis before providing any instrumentation or control equipment containing these materials.

2.6 Shop Quality Control

2.6.1 Inspections

2.6.1.1 VENDOR shall submit a Fabrication/Inspection/Test Plan in accordance with Section 1.5.6.2. VENDOR or lower tier suppliers shall be responsible for qualifying the welding procedures. All welder and weld inspector qualifications and welding and inspection procedures shall be current for the duration of the project work performed.

2.6.1.2 Weld inspections shall be accordance with CSI Section 40 05 05 33, "Pipe Welding," with the following clarifications:

A. All welds that are performed on process containment components shall have 100% visual examination per ASME B31.3.
B. 100% radiographic examination of pressure boundary welds. If approved by BUYER on a weld-for-weld basis, ultrasonic examination may be substituted for radiography.
C. Liquid penetrant method shall be applied to 100% of all sockets, fillets and attachment welds.

2.6.1.3 Prior to any inspection and testing performed and/or witnessed by BUYER, VENDOR shall perform inspections and tests to ensure that the equipment meets specifications and is suitable for the intended service. VENDOR's own inspections shall be appropriate for the intended purpose and shall conform to good industry practices and to applicable regulations, codes and standards.

2.6.1.4 VENDOR shall document the inspections and shall maintain files of such information and make such files available to BUYER upon request.

2.6.1.5 All inspection and testing requirements will be in accordance with accepted codes and standards and approved test plans with BUYER's established hold/witness points as identified in the contract documents.

A. All test and inspections shall be traceable to the item inspected.
B. Inspections and tests shall be performed by certified / qualified personnel.
C. Calibrated measurement and test equipment shall be used to determine the acceptance of inspections and tests.

2.6.2 Shop Testing

Detailed requirements for shop testing are found in Section 3.5, Demonstration/Testing.

3.0 PART 3 - EXECUTION

3.1 Preparation

3.1.1 Not Used

3.2 Erection, Installation & Application

3.2.1 Where specified on the data sheet that field technician calibration is required, VENDOR shall provide estimate of service for that device. Estimated shall include the following:

- Hourly Rate
- Estimated hours to complete
- Travel Expenses

3.3 Field Quality Control

3.3.1 Inspection

3.3.1.1 Detail equipment drawings and inspection records shall be made available for review and approval prior to testing of the equipment. A final equipment inspection and integrated field test shall be conducted.

3.3.1.2 Areas of inspection shall include verification of fabrication, assembly and testing in accordance with VENDOR's procedures.

3.3.1.3 BUYER reserves the right to inspect all phases of test phases.

3.4 Adjusting And Cleaning

VENDOR shall refer to CSI Section 01 66 00, "Delivery, Storage and Handling," for cleaning requirements.

3.5 Demonstration/Testing

3.5.1 VENDOR shall submit an Inspection and Fabrication/Inspection/Test Plan in accordance with Section 1.5.6.2.

3.5.2 All defects in materials, wiring and assembly detected as a result of testing shall be repaired or replaced by the VENDOR at no additional cost to BUYER.

3.5.3 Test results shall be recorded and submitted to BUYER.

3.5.4 The VENDOR shall be responsible for performing and documenting all inspections and testing necessary to demonstrate compliance with all relevant specifications, drawings and related standards, as outlined in the Test Plan.

3.5.5 Pressure Testing

3.5.5.1 Device bodies shall be pressure tested per Manufacturer standards to meet device body rating and in accordance to 1.5.5.3, Quality Assurance Program Manual.

A. Calibration of device shall be performed after device pressure testing.

3.5.6 Seismic Testing

3.5.6.1 Instruments and panels for this test shall be furnished as functionally identical units to those delivered to BUYER for installation.

3.5.6.2 Instruments that are designated on instrument data sheets as conf_SS shall be qualified by calculation/analysis (reference section 1.5.6.1) or Seismic Testing.

3.5.6.3 All instruments that are designated on instrument data sheets as SS shall undergo Seismic Testing.

3.5.6.4 Testing shall be in accordance with CSI Section 01 81 02, "Safety Natural Phenomena Hazard Performance Requirements," data sheet designated seismic requirements and functional acceptance per section 1.8.1.3.B and 1.8.1.3.B. Testing shall be conducted in accordance with IEEE 344, *Standard for Seismic Qualification of Equipment for Nuclear Power Generating Stations*.

3.5.6.5 Testing shall meet the requirements of the BUYER's CGD plan.

3.5.7 As-Built Drawings

3.5.7.1 Any changes made during testing shall be clearly identified (marked in red) on a full record set of contract drawings, and submitted to BUYER to document as-built conditions.

3.5.7.2 As-built mark-ups shall be incorporated into the as-built drawings which shall be submitted to BUYER for final approval prior to delivery.

A. A set of as-built drawings shall be included with the delivery of the equipment.

3.5.8 Final inspection Report

The VENDOR shall prepare a final inspection report for each item which documents the result of the final inspection. This inspection shall include and confirm as minimum the following:

3.5.8.1 All inspection documentation identified is complete with all inspection signatures and assembled as defined within this specification and CSI Section 01 33 00, "Submittals".

3.5.8.2 All critical dimensions and general dimension tolerances on design documents are achieved (if applicable).

3.5.8.3 Overall visual inspection to cover any damage to vulnerable equipment items to include but not limited to instruments, electrical or instrument cable, small bore piping, and seals, etc.

3.5.8.4 Equipment orientation/configuration is correct.

3.5.8.5 Confirmation that all structural and equipment bolt tightening has been completed to BUYER specified torque values and fabrication specification.

3.5.8.6 Surface finish matches design documents.

3.5.8.7 Labeling to include correct item identification and marking.

3.5.8.8 Any specific fabrication requirements defined on data sheets or associated fabrication specifications have been accounted for in the final fabrication.

3.5.8.9 All VENDOR issued as-built drawing data matches the final fabrication.

3.6 Protection

3.6.1 Not Used

4.0 LIST OF APPENDICES

4.1 Appendix A - Supporting Documentation Issued with this Specification

Appendix A – Supporting Documentation Issued with this Specification

Document Number	Document
H-16-001921	LAWPS Temperature Transmitter TYP ASSY and Installation

Data sheets: As provided with the purchase order

SPECIFICATION

19-2-017

LEAK DETECTION INSTRUMENTS SPECIFICATION

AECOM ATKINS AREVA

LOW ACTIVITY WASTE PRETREATMENT SYSTEM

Project No. 31269 (T5L01)

Document No. 19-2-017

CSI Section 40 72 83

Safety Related ☐ Non-Safety Related ☒

LEAK DETECTION INSTRUMENTS SPECIFICATION

Prepared for

Washington River Protection Solutions, LLC

Revision: 0 Status: Final

HABIB TANIOS FEGHALI
STATE OF WASHINGTON
52852
REGISTERED
PROFESSIONAL ENGINEER

5/16/2017

FOR PERMITTING
HTF 5/16/2017

REVISION PAGE

Project Name:	LAWPS	**Discipline:**	19
Client:	Washington River Protection Solutions	**Project Number:**	31269 (T5L01)
		Latest Revision:	0

REVISION SIGNATURES

S. Firican	Alexandru Firican Digitally signed by Alexandru Firican DN: cn=Alexandru Firican, o=AECOM, ou=MS, email=alexandru.firican@aecom.com, c=US Date: 2017.05.15 08:28:37 -06'00'	H. Feghali	Habib Feghali Digitally signed by Habib Feghali DN: cn=Habib Feghali, o=AECOM, ou=Management Services, email=habib.feghali@aecom.com, c=US Date: 2017.05.15 09:21:52 -06'00'
Prepared by	**Date**	**Approved by (SDE/Lead)**	**Date**
D. Horn	Daniel Horn Digitally signed by Daniel Horn Date: 2017.05.15 08:43:51 -06'00'	P. Bell	Paul Bell Digitally signed by Paul Bell Date: 2017.05.15 15:39:47 -06'00'
Checked by	**Date**	**Approved by (QA)** For DP	**Date**
N/A		D. Priebe	Michael Schultze Digitally signed by Michael Schultze Date: 2017.05.15 18:50:06 -06'00'
Verified by (if required)	**Date**	**Approved by (PEM)**	**Date**

Status	Rev. No.	Date	Prepared By	Pages	Description of Changes
Final	0	5/17/2017	ASF	All	Approved for Bid

Safety Related: Yes ☐ No ☒	**Quality Level:** Full QA ☐ Enhanced QA ☒ Commercial QA ☐

TABLE OF CONTENTS

1.0 PART 1 – GENERAL 1

1.1 Section Scope 1
1.2 Related Sections 1
1.3 Codes and Standards 1
1.4 System Description 3
1.5 Submittals 3
1.6 Delivery, Storage, and Handling 5
1.7 Quality Assurance 5
1.8 Site Conditions 7

2.0 PART 2 - PRODUCTS 8

2.1 Manufacturers 8
2.2 Materials 8
2.3 Equipment 8
2.4 Components 9
2.5 Fabrication 10
2.6 Shop Quality Control 10

3.0 PART 3 - EXECUTION 11

3.1 Preparation 11
3.2 Erection, Installation, and Application 11
3.3 Field Quality Control 11
3.4 Adjusting and Cleaning 11
3.5 Demonstration 11
3.6 Protection 11

4.0 List of Appendices 12

4.1 Appendix A - List of Instrument Data Sheets Issued with this Specification 12

LIST OF TERMS

Abbreviations and Acronyms

Term	Definition
ASME	American Society of Mechanical Engineers
CoC	Certificate of Conformance
CQA	Commercial Quality Assurance
CSI	Construction Specifications Institute
EQA	Enhanced Quality Assurance
FQA	Full Quality Assurance
ID	Identification
ILAC	International Laboratory Accreditation Cooperation
ISA	International Society for Automation
LAWPS	Low Activity Waste Pretreatment System
NACLA	National Cooperation for Laboratory Accreditation
NEMA	National Electrical Manufacturers Association
NFPA	National Fire Protection Association
NRTL	Nationally Recognized Testing Laboratory
PSSH	Packaging, Storage, Shipping and Handling
RFI	Request for Information
SPDT	Single Pole, Double Throw
TBV	To Be Verified
WAC	Washington Administrative Code

Units

Unit	Description
°F	Degree Fahrenheit
psia	Pounds per Square Inch (absolute)
RH	Relative Humidity
VDC	Volts Direct Current

Definitions

BUYER – The company for whom the VENDOR is performing work or services.

COMMERCIAL QUALITY ASSURANCE (CQA) - Level of controls for those items, services, or processes where, based on an evaluation of risk or nuclear safety, no additional quality controls beyond the provider's published or stated attributes of the item, service, or process is required.

DESIGN CHANGE – Within the context of this specification, a DESIGN CHANGE is technically equivalent to a SUBSTITUTION (see SUBSTITUTION). However, the term DESIGN CHANGE may be used to refer to more significant changes to the design compared to a simple substitution.

DEVIATION – Any departure from the requirements contained in the purchase order and specification which VENDOR proposes to incorporate if approved by BUYER.

ENHANCED QUALITY ASSURANCE (EQA) - Level of controls for those items, services, or processes where, based on an evaluation of risk or nuclear safety, additional controls beyond the provider's published or stated attributes of the item, service, or process are needed to verify critical attributes.

FULL QUALITY ASSURANCE (FQA) - Level of controls applied for items services, or processes that are commensurate with the controls invoked under ASME NQA-1 or other appropriate national consensus standard.

HANDLING - The movement or transportation of items following receipt from offsite/ project locations. This includes movement within storage areas and movement/transportation from receipt or storage areas to field locations. Handling requirements include the need for special handling tools and equipment, restrictions on material composition of surfaces in contact with the item, protection against damage or deterioration, which could occur during movement and placement, protection against physical damage due to excessive shock or vibration, and protection against entry of dirt, water, or other contaminants.

HOLD POINT – A mandatory inspection activity beyond which work shall not proceed until (1) the inspection is performed by an independent inspector and/or BUYER and acceptance is authenticated, or (2) a written release is authorized by the organization who established the hold point.

MANUFACTURER – The party responsible for making the product.

MORE CONSERVATIVE – "More conservative" shall be interpreted as "more protective of the health, safety and well-being of Site workers and facilities, the public, and environment, as applicable."

NONCONFORMANCE – a deficiency in characteristic, documentation, or procedure that renders the quality of an item or activity unacceptable or indeterminate.

PRESSURE-CONTAINING COMPONENTS – Items that form the pressure-containing envelope of the piping system.

PROCUREMENT QUALITY CLAUSES (QA CLAUSES) - Procurement quality clauses are to be used for the acquisition of items and services. The clauses establish contractual obligations for quality program systems, identification, traceability, documents submittals, testing, reporting, qualification, special process controls, inspections, etc.

PRODUCT DATA – Printed information including, but not limited to, catalog cuts, color charts, illustrations, diagrams, templates, performance curves, brochures, and other forms of Product literature.

QUALITY ASSURANCE RECORDS – Quality assurance plans, procedures, and records, including completed documents that furnish evidence of the quality of an item or activities affecting quality.

SHALL / MUST – Denotes project requirements, compliance is required

SHIPPING – The movement of items from an off-site/project location (VENDOR, warehouse, etc.) to an on-site/project location, or movement from an onsite/ project location to an off-site/project location. Shipping requirements include packaging and securing of items to protect against damage or deterioration which could occur during movement and transportation, protection against physical damage due to excessive shock or vibration, protection against entry of dirt, water, or other contaminants, and protection against other environmental conditions such as temperature or humidity.

SHOULD – Denotes recommendation or expectation, compliance is expected.

SPECIFICATION – Refers to any design, fabrication or supply specification.

STORAGE – Holding of items in areas that address: the probable maximum period to be held, the inherent physical limitations of the item itself, and required protection from potential hazards such as fire, corrosion, chemical attack and environmental conditions. Storage also includes the requirements for maintaining the integrity and operability of items through routine maintenance, cleaning, or other means of preservation.

SUBSTITUTION – Any change or deviation from issued approved drawings, designs, methods, or contract terms and conditions. Changes in products, materials, equipment, methods of construction, and test criteria required by the Contract Documents proposed by the VENDOR after award of the Contract are considered to be requests for substitution.

VENDOR – The Company responsible for the supply of equipment or services.

WITNESS POINT – An inspection activity beyond which work shall not proceed until an inspector and/or BUYER is notified and (1) the inspection is performed and released, or (2) the inspection is deferred and can be completed at a later time, or (3) a written waiver is issued by the organization who established the witness point.

1.0 PART 1 – GENERAL

1.1 Section Scope

1.1.1 This specification covers engineering, design, fabrication, shipping and delivery for general service, intrinsically safe rated Leak Detection field instrumentation for the Low Activity Waste Pretreatment System (LAWPS) Project (Project T5L01). The leak detection components include point sensor electrodes, interconnecting cables and relays.

1.1.2 The leak detection sensors and remoted control elements shall be suitable for installation in the area classification specified on instrument data sheets.

1.2 Related Sections

1.2.1 The following related documents contain additional instrumentation requirements:

01 25 00	Substitutions and Design Changes
01 33 00	Submittals
01 40 00	Quality Assurance
01 60 00	Labeling
01 66 00	Delivery, Storage, and Handling
01 81 01	General Service Natural Phenomena Hazard Performance Requirements

1.2.2 Should there be any conflicts/discrepancies amongst these documents; the VENDOR shall request a written resolution from the BUYER or BUYER's representative.

1.3 Codes and Standards

1.3.1 Work shall be performed in accordance with the referenced codes, standards, and documents for this specification.

1.3.2 The following codes and standards, of the exact issue shown, form part of the BUYER basis of design to the extent specified in the applicable sections of this document. In the event of a conflict between documents referenced herein and the requirements of this specification, the requirements of this specification shall take precedence only when this specification's requirements are more stringent or conservative. If a code or standard not listed below is to be applied to the scope (see Section 1.1), apply the latest code or standard as of April 16, 2015. VENDOR shall state, with proposal, any exceptions to these standards that, in VENDOR's opinion, are not applicable in whole or part.

1.3.3 In addition to Codes and Standards listed herein, all materials and workmanship shall be in accordance with all applicable US and local jurisdiction laws, codes and regulations.

1.3.4 Government Documents

1.3.4.1 DOE – United States Department of Energy
- DOE Order 414.1D (2011), *Quality Assurance*

1.3.4.2 OSHA – Occupational Safety and Health Administration
- 29 CFR 1910 (2015)

1.3.4.3 Washington Administrative Code (WAC)
- 173-303-640 (2015), *Tank Systems*
- 296-46B-010, *Inspections*
- 296-46B-903, *Equipment Standards*
- 296-46B-997, *Engineer Approval*
- 296-46B-999, *Electrical Testing Laboratory Requirements*

1.3.5 Non-Government Documents

1.3.5.1 FM Global – Factory Mutual Global

1.3.5.2 FM Approval Guide, LLC.

1.3.5.3 ISA – The International Society of Automation
- ISA 12.12.01 (2013), *Nonincendive Electrical Equipment for Use in Class I and II, Division 2 and Class III, Divisions 1 and 2 Hazardous (Classified) Locations*

1.3.5.4 ISO – International Organization for Standardization
- ISO 9001, *Quality Management Systems - Requirements*

1.3.5.5 ISO/IEC – International Organization for Standardization / International Electrotechnical Commission
- ISO/IEC 17025 (2005), *General Requirements for the Competence of Testing and Calibration Laboratories*

1.3.5.6 NCSL – National Conference of Standards Laboratories
- NCSL Z540-3 (2006), *Requirements for the Calibration of Measuring and Test Equipment*

1.3.5.7 NFPA – National Fire Protection Association
- NFPA 70 (2014), *National Electric Code*

1.3.5.8 UL – Underwriters Laboratories
- UL-44 (2014), *Rubber and Insulated Wires and Cables*
- UL-1581 (2001), *Standard for Safety Reference Standard for Electrical Wires, Cables, and Flexible Cords*

1.4 System Description

1.4.1 Description

The Leak Detection instrumentation that falls under the scope of supply of this specification is as follows:

1.4.1.1 Leak Detector components as defined on the instrument data sheets listed in Appendix A - List of Supporting Documentation to be issued with this Specification.

1.4.1.2 VENDOR shall provide for the selection of all accessories, materials, and methods of fabrication not specifically addressed in this Specification, but which are necessary to provide complete instrument as defined on the data sheets. This selection shall be carried out in accordance with good engineering practices subject to written approval by BUYER.

1.5 Submittals

Submittals that are listed within this section shall be prepared and processed in accordance with requirements of CSI Section 01 33 00 "Submittals" and shall include all of the required Quality Assurance documentation in accordance with CSI Section 01 40 00 "Quality Assurance" of this specification.

1.5.1 Quality Assurance submittals (Complete list in Section 1.7 Quality Assurance)

1.5.1.1 Quality Assurance Program for Nonconformance Documentation and Reporting in accordance with QA Clause B22.

1.5.1.2 Quality Assurance Program per ISO 9001, *Quality Management Systems – Requirements* or NQA-1-2008/2009 Addendum.

A. Suspect/Counterfeit Items Program per DOE O 414.1D, Attachment 3 or BUYER approved program. Submit certification against the procurement of potentially suspect or counterfeit items (i.e., all supplied materials shall be genuine, new, and unused), in accordance with QA Clause B76.

1.5.2 Technical Submittals include:

1.5.2.1 List of Fabrication Codes and Standards including Revision and/or Issue Date.

1.5.2.2 VENDOR Technical Proposal Package, as identified in CSI Section 01 33 00 "Submittals". The following documents shall be submitted with Technical Proposal Package:

A. Project Schedule
B. Drawing List
C. Quality Assurance Program Manual
D. Manufacturer's Cut Sheets

E. Marked-up BUYER's Data Sheet Indicating Changes and/or Additions.

1.5.2.3 Request for Information (RFI), shall be submitted on BUYER supplied form A-6003-417.

1.5.2.4 Nonconformance Reports/Deficiency Reports shall be approved in accordance with QA Clause B22.

1.5.2.5 Final Lifetime Records, per Section 1.5.4.

1.5.3 Delivery Storage and Handling

1.5.3.1 Packaging, Storage, Shipping & Handling (PSSH) Plan in accordance with QA Clause B85.

1.5.3.2 Site Assembly Instructions for each device.

1.5.4 Final Lifetime Records

The VENDOR shall prepare a documentation Final Data Package for each item. Documents will be submitted and approved prior to final acceptance of the equipment and release for shipment. Documents shall include:

1.5.4.1 Certificates of Conformance (CoCs) & Signature Verification Sheets

A. To demonstrate compliance with the Codes and Standards, VENDOR shall ensure that these products are supplied with a Certificate of Conformance in accordance with QA Clause B79.

1.5.4.2 Certificates and Reports

A. Calibration Certificates, in accordance with QA Clause B61
B. Calibration Reports : Calibration documentation indicating instrument and/or control device calibrated, setpoints, calibration results (including "As Found", and "As Left" data), test curves, test reports, and calibration technicians initials, and date of calibration.
C. Calibration certificates for VENDOR owned instruments and measurement equipment used during testing shall be submitted in accordance with QA Clause B12.
D. Electrical components shall be listed by a Nationally Recognized Testing Laboratory (NRTL) and labeled accordingly, in accordance with QA Clause B65.
E. Certification against the procurement of potentially suspect or counterfeit items (i.e., all supplied materials shall be genuine, new, and unused), in accordance with QA Clause B76.

1.5.4.3 Nonconformance Reports in accordance with QA Clause B22.

1.5.4.4 Manufacturers/ VENDORS Data

A. Datasheets on all instruments shall be supplied in accordance with QA Clause B33.
B. All items shall be labeled with a part number/model number in accordance with QA Clause B32.
C. Enclosure catalog cut sheets showing model information and ratings.
D. Installation and instruction manuals for all instruments and accessories including but not limited to: operation, installation and maintenance.
E. Recommended spare parts list in accordance with QA Clause B82

1.6 Delivery, Storage, and Handling

1.6.1 Refer to related CSI Section 01 66 00 "Delivery, Storage and Handling" for general delivery, storage and handling related requirements in addition to the requirements of this section.

1.6.2 VENDOR shall be responsible for ensuring that no physical damage to equipment occurs during transit to the plant and field sites.

1.6.3 VENDOR shall advise on requirements for storage of equipment at site prior to installation.

1.6.4 Instruments shall be crated, boxed or otherwise protected against damage or loss during shipment, and to facilitate field handling.

1.6.5 Loose components shall be securely attached to the unit or be shipped separately in a box.

1.7 Quality Assurance

1.7.1 Applicable QA Clauses are summarized in the table below. The full QA Clause definition and associated requirements are located in CSI Section 01 40 00 "Quality Assurance".

1.7.2 The VENDOR shall implement and maintain a quality system in accordance with the applicable elements ISO 9001 Quality Management Systems – Requirements and Suspect/Counterfeit Items Program.

1.7.3 The VENDOR shall implement and maintain a calibration system in accordance with ISO/IEC 17025:2005, General requirements for the competence of testing and calibration laboratories; or as an alternative, a calibration system that complies with NCSL Z540-3, Requirements for the Calibration of Measuring and Test Equipment. The contractor may accept accreditation of the VENDOR's calibration system if the identified accredited body is recognized by either the National Cooperation for Laboratory Accreditation (NACLA) or the International Laboratory Accreditation Cooperation (ILAC) in lieu of Contractor review and approval.

1.7.4 Unless otherwise specified, items required by the Purchase Order shall be procured directly from the original manufacturer or an authorized master distributor. Items delivered under this Purchase Order will be inspected by the BUYER for indications of suspect or counterfeit or fraudulent

conditions. Detection by the BUYER of any suspect or counterfeit item leading to evidence of deliberate misrepresentation of any supplied item may result in an investigation into the validity of certification, fraud, and/or forgery. Reference DOE Order 414.1D, Attachment 3, Suspect/Counterfeit Items Prevention.

1.7.5 VENDOR labor shall be appropriately qualified for tasks by education, experience, and certifications.

1.7.6 Upon completion, VENDOR shall provide as electronic files all documents/information as detailed in this specification

1.7.7 The following verification points required by this section shall be in accordance with CSI Section 01 40 00 "Quality Assurance" verified by the BUYER, as applicable. At a minimum, the following witness and hold points shall apply:

Table 1.7-1 Hold and Witness Point Verification

Verification Point Description	Type of Verification
Prior to Shipping of Instruments	Hold

1.7.8 The VENDOR shall provide required notifications of verification points in accordance with CSI Section 01 40 00 "Quality Assurance" as applicable, and shall not proceed past required hold points without written authorization from the BUYER QA representative.

The full QA Clause definition and associate requirements are located in CSI Section 01 40 00 "Quality Assurance".

Table 1.7-2 Procurement Quality Clause

SUPPLIER FABRICATION
B12 Supplier Use of Calibrated Equipment
B22 Nonconformance Documentation and Reporting
MATERIAL IDENTIFICATION
B32 Identification of Items with Part number/Model number
B33 Identification of Items with Product Data Sheet
TESTING AND TEST DATA
B61 Certification of Calibration
B65 Nationally Recognized Testing Laboratory (NRTL) Listing or Labeled
INSPECTION AND ACCEPTANCE CRITERIA
B76 Procurement of Potentially Suspect or Counterfeit Items
B79 Certificate of Conformance

INSPECTION AND ACCEPTANCE CRITERIA
B82 Recommended Spare Parts Listing
MATERIAL HANDLING
B85 Packaging/Shipping Procedures

1.8 Site Conditions

1.8.1 VENDOR's equipment shall be suitable for operation in the conditions of service as stated below:

Instruments data sheets shall specify ambient conditions for instrument locations.

1.8.1.1 The LAWPS site design site conditions are as follows:

- Outdoor temperature: -25°F to 115°F
- Outdoor relative humidity: 0 – 100%
- Barometric pressure: 14.35 psia (measured at a meteorological tower 733 feet above sea level)

1.8.1.2 The LAWPS site indoor conditions are to be maintained as follows:

- Indoor temperature: 60°F to 120°F +/-10°F
- Off-Normal Indoor temperature: 20°F to 140°F
- Normal Operational Indoor relative humidity: 5% to 70% RH @ Normal Operational Indoor Temperature Above
- Off-Normal Indoor relative humidity: 5% to 100% RH @ Off-Normal Indoor Temperature Above.

1.8.1.3 The LAWPS vault conditions are as follows:

- Normal Operational Vault temperature: 60°F to 120°F +/-10°F
- Off-Normal Vault temperature: 20°F to 140°F
- Normal Vault relative humidity: 5% - 50% RH @ Normal Temperature Above

2.0 PART 2 - PRODUCTS

2.1 Manufacturers

Subject to compliance with the requirements specified herein, the following list of preferred manufacturers is identified:

Table 2.1-1 Recommended Hardware

Description	Vendor	Model no.
Leak Detector	Fluid Components International (FCI)	FLT93S

2.1.1 Deviation from the Table 2.1-1 specified suppliers shall not be permitted without prior written approval from the BUYER.

2.2 Materials

2.2.1 See Data Sheets for specific required materials.

2.2.2 The instruments, controls and software supplied shall be industry standard, commercial off-the-shelf, and be part of an existing product line.

2.2.3 All products shall be new and unused. Items not specified herein or on the drawings shall be new and of the highest quality of their respective kinds.

2.2.4 The use of non-combustible and limited-combustible materials is required to the fullest extent possible. Where there is an opportunity to choose between readily available materials, non-combustible and limited-combustible materials shall be selected.

2.2.5 VENDOR shall standardize on components used to the greatest extent possible.

2.3 Equipment

2.3.1 General Requirements

2.3.1.1 The system shall be capable of performing automatic, continuous leak sensing in the designated location.

2.3.1.2 Units shall have sensing probes with an accuracy of 0.25 in. of the measured liquid level

2.3.1.3 Instrumentation shall be supplied in accordance with the requirements of this specification and the respective instrument data sheets.

2.3.2 Electrical Requirements

2.3.2.1 All electrical design shall comply with NFPA 70, Washington Administrative Codes (WAC), FM Approval Guide and ISA 12.12.01. WAC requirements include but are not limited to the following: 173-303-640, 296-46B-010, 296-46B-903, 296-46B-997 and 296-46B-999.

2.3.3 Identification and Marking

2.3.3.1 Instruments and control components shall be permanently labelled with identification numbers in accordance with tags identified in data sheets and drawings.

2.3.3.2 Each instrument shall have a stainless steel nameplate attached. Nameplates shall include at least the manufacturer's name, figure number, serial number and size.

2.3.3.3 All Instrument and accessory labels shall be provided and affixed to instrument in accordance with CSI Section 01 60 00, "Labeling".

2.4 Components

2.4.1 Sensing Element

2.4.1.1 The sensing element shall be a thermal dispersion type.

2.4.1.2 The sensing element shall be 316L stainless steel with all-welded construction.

2.4.1.3 The sensing element shall be provided with a 50ft. length interconnecting cable, capable of supporting the weight of the element.

2.4.1.4 Interconnecting cables, where specified on data sheets as being located in high radiation zones, shall be radiation resistant, for radiation doses specified on instrument data sheets.

2.4.1.5 The sensing element shall be capable of continuous operation in the site conditions listed in Section 1.8, depending on sensor location.

2.4.1.6 The sensing element will be installed in the electrical hazardous area classification specified on the instrument data sheets.

2.4.2 Control Circuit / Remote Enclosure

2.4.2.1 The control circuit enclosure shall be rated to NEMA 4X. The enclosure shall provide cable entry and termination for the sensor element cabling while maintaining this rating.

2.4.2.2 The enclosure shall be capable of continuous operation in the site conditions listed in Section 1.8

2.4.2.3 The control circuit enclosure will be installed in theelectrical hazardous area classification specified on instrument data sheet.

2.4.2.4 The control circuit shall have hermetically sealed, SPDT (Single Pole, Double Throw) relay contacts in order to provide two Wet/Dry Level service Alarm. For unit fault detection, Alarm no. 1 shall be set for high level / "wet" and Alarm no. 2 shall be set for low level / "dry" in order to alarm when unit fails in the opposite direction than wet.

2.4.2.5 The control circuit power voltage shall be 24VDC.

2.4.3 Critical Characteristics

2.4.3.1 Critical characteristics for instruments are included in the corresponding data sheets.

2.5 Fabrication

2.5.1 Finishes

2.5.1.1 External paint color for all enclosures shall be VENDOR's standard.

2.5.1.2 All paint shall be suitable for the environment in which the enclosure will be mounted.

2.5.1.3 Paint shall be applied in strict compliance with the paint manufacturer's instructions.

2.5.1.4 All wiring and insulation supplied shall be flame resistant. Wiring insulation shall be capable of passing the flame test of UL 44, UL 1581 or other BUYER approved flame test.

2.6 Shop Quality Control

2.6.1 Not Used

3.0 PART 3 - EXECUTION

3.1 Preparation

3.1.1 Not Used

3.2 Erection, Installation, and Application

3.2.1 Not Used

3.3 Field Quality Control

3.3.1 Not Used

3.4 Adjusting and Cleaning

3.4.1 VENDOR shall refer to CSI Section 01 66 00 "Delivery, Storage and Handling" for cleaning requirements.

3.5 Demonstration

3.5.1 Not Used

3.6 Protection

3.6.1 Not Used

4.0 LIST OF APPENDICES

4.1 Appendix A - List of Instrument Data Sheets Issued with this Specification

Appendix A – List of Instrument Data Sheets issued with this Specification

Data sheets: As provided with the purchase order

SPECIFICATION

19-2-018

FACILITY INSPECTION CCTV

AECOM ATKINS AREVA

LOW ACTIVITY WASTE PRETREATMENT SYSTEM

Project No. 31269 (T5L01)

Document No. 19-2-018

CSI Section 28 20 00

Safety Related ☐ Non-Safety Related ☒

FACILITY INSPECTION CCTV SYSTEM SPECIFICATION

Prepared for

Washington River Protection Solutions, LLC

Revision: 0 Status: Final

HABIB TANIOS FEGHALI
STATE OF WASHINGTON
52852
REGISTERED
PROFESSIONAL ENGINEER

5/17/2017

FOR PERMITTING
HTF 5/17/2017

AECOM ATKINS AREVA

Project Number: 31269 (T5L01)
Doc. No.: 19-2-018
Date: May 17, 2017
Revision: 0

REVISION PAGE

Project Name:	LAWPS	**Discipline:**	19
Client:	Washington River Protection Solutions	**Project Number:**	31269 (T5L01)
		Latest Revision:	0

REVISION SIGNATURES

I. Leaver lain Leaver Digitally signed by Iain Leaver Date: 2017.05.15 08:38:30 -07'00'		H. Feghali Habib Feghali Digitally signed by Habib Feghali DN: cn=Habib Feghali, o=AECOM, ou=Management Services, email=habib.feghali@aecom.com, c=US Date: 2017.05.15 10:23:32 -06'00'	
Prepared by	**Date**	**Approved by (SDE/Lead)**	**Date**
D. Horn Daniel Horn Digitally signed by Daniel Horn Date: 2017.05.15 10:17:04 -06'00'		P. Bell Paul Bell Digitally signed by Paul Bell Date: 2017.05.15 15:38:59 -06'00'	
Checked by	**Date**	**Approved by (QA)** For DP	**Date**
N/A		D. Priebe Michael Schultze Digitally signed by Michael Schultze Date: 2017.05.15 18:49:24 -06'00'	
Verified by (if required)	**Date**	**Approved by (PEM)**	**Date**

Status	Rev. No.	Date	Prepared By	Pages	Description of Changes
Final	0	5/17/17	IL	ALL	Approved for Bid

Safety Related: Yes ☐ No ☒	**Quality Level:** Full QA ☐ Enhanced QA ☐ Commercial QA ☒

TABLE OF CONTENTS

1.0 PART 1 - GENERAL 1
1.1 Section Scope 1
1.2 Related Sections 1
1.3 Codes and Standards 1
1.4 System Description 2
1.5 Submittals 5
1.6 Delivery, Storage & Handling 6
1.7 Quality Assurance 6
1.8 Site Conditions 7

2.0 PART 2 – PRODUCTS 9
2.1 Manufacturers 9
2.2 Material 9
2.3 Equipment 9
2.4 Components 10
2.5 Fabrication 13
2.6 Shop Quality Control 13

3.0 PART 3 – EXECUTION 15
3.1 Preparation 15
3.2 Erection, Installation & Application 15
3.3 Field Quality Control 15
3.4 Adjusting and Cleaning 15
3.5 Demonstration 15
3.6 Protection 16

4.0 LIST OF APPENDICES 17

LIST OF TERMS

Abbreviations and Acronyms

Term	Definition
ASME	American Society of Mechanical Engineers
CCTV	Closed Circuit Television
CFR	Code of Federal Regulations
CoC	Certificate of Conformance
COTS	Commercial-off-the-shelf
CQA	Commercial Quality Assurance
CSI	Construction Specifications Institute
DOE	U. S. Department of Energy
EQA	Enhanced Quality Assurance
FQA	Full Quality Assurance
HD	High Definition
LAWPS	Low Activity Waste Pretreatment System
LED	Light-emitting Diode
NEC	National Electric Code
NEMA	National Electrical Manufacturers Association
NFPA	National Fire Protection Association
NQA	Nuclear Quality Assurance
NRTL	Nationally Recognized Testing Laboratory
OSHA	Occupational Safety and Health Administration
PTZ	Pan, Tilt and Zoom
QA	Quality Assurance
RFI	Request for Information
TBD	To Be Determined
TBV	To Be Verified
TV	Television
WRPS	Washington River Protection Solutions, LLC

Units

Unit	Description
°F	Degree Fahrenheit
A	Ampere
Ft	Foot
Hz	Hertz
In	Inch
RH	Relative Humidity
VAC	Voltage Alternating Current

Definitions

BUYER – The company for whom the VENDOR is performing work or services.

COMMERCIAL QUALITY ASSURANCE (CQA) – Level of controls for those items, services or processes where, based on and evaluation of risk or nuclear safety, no additional quality controls beyond the provider's published or stated attributes of the item, service, or process is required.

DESIGN CHANGE – Within the context of this specification, a DESIGN CHANGE is technically equivalent to a SUBSTITUTION (see SUBSTITUTION). However, the term DESIGN CHANGE may be used to refer to more significant changes to the design compared to a simple substitution.

DEVIATION – Any departure from the requirements contained in the purchase order and specification which VENDOR proposes to incorporate if approved by BUYER.

ENHANCED QUALITY ASSURANCE (EQA) – Level of controls for those items, services, or processes where, based on an evaluation of risk or nuclear safety, additional controls beyond the provider's published or stated attributes of the item, service or process are needed to verify critical attributes.

FULL QUALITY ASSURANCE (FQA) – Level of controls applied for items services, or processes that are commensurate with the controls invoked under ASME NQA-1 or other appropriate national consensus standard.

HANDLING – The movement or transportation of items following receipt from offsite/ project locations. This includes movement within storage areas and movement/transportation from receipt or storage areas to field locations. Handling requirements include the need for special handling tools and equipment, restrictions on material composition of surfaces in contact with the item, protection against damage or deterioration, which could occur during movement and placement, protection against physical damage due to excessive shock or vibration, and protection against entry of dirt, water, or other contaminants.

HOLD POINT – A Mandatory inspection activity beyond which work shall not proceed until (1) the inspection is performed by an independent inspector and/or BUYER and acceptance is

authenticated, or (2) a written release is authorized by the organization who established the hold point.

MANUFACTURER – The Party responsible for making the product

MORE CONSERVATIVE – "More conservative" shall be interpreted as "more protective of the health, safety and well-being of Site workers and facilities, the public, and environment, as applicable."

NONCONFORMANCE – A deficiency in characteristic, documentation, or procedure that renders the quality of an item or activity unacceptable or indeterminate.

PROCUREMENT QUALITY CLAUSES (QA CLAUSES) – Procurement quality clauses are to be used for the acquisition of items and services. The clauses establish contractual obligations for quality program systems, identification, traceability, documents submittals, testing, reporting, qualification, special process controls, inspections, etc.

PRODUCT DATA – Printed information including, but not limited to, catalog cuts, color charts, illustrations, diagrams, templates, performance curves, brochures, and other forms of Product literature.

QUALITY ASSURANCE RECORDS – Quality assurance plans, procedures, and records, including completed documents that furnish evidence of the quality of an item or activities affecting quality.

SHALL / MUST – Denotes project requirements, compliance is required.

SHIPPING – The movement of items from an off-site/project location (VENDOR, warehouse, etc.) to an on-site/project location, or movement from an onsite/ project location to an off-site/project location. Shipping requirements include packaging and securing of items to protect against damage or deterioration which could occur during movement and transportation, protection against physical damage due to excessive shock or vibration, protection against entry of dirt, water, or other contaminants, and protection against other environmental conditions such as temperature or humidity.

SHOULD – Denotes recommendation or expectation, compliance is expected.

SPECIFICATION – Refers to any design, fabrication or supply specification.

STORAGE – Holding of items in areas that address: the probable maximum period to be held, the inherent physical limitations of the item itself, and required protection from potential hazards such as fire, corrosion, chemical attack and environmental conditions. Storage also includes the requirements for maintaining the integrity and operability of items through routine maintenance, cleaning, or other means of preservation.

SUBSTITUTION – Any change or deviation from issued approved drawings, designs, methods, or contract terms and conditions. Changes in products, materials, equipment, methods of construction, and test criteria required by the Contract Documents proposed by the VENDOR after award of the Contract are considered to be requests for substitution.

VENDOR – The company responsible for the supply of equipment and/or services.

WITNESS POINT – An inspection activity beyond which work shall not proceed until an inspector and/or BUYER is notified and (1) the inspection is performed and released, or (2) the inspection is deferred and can be completed at a later time, or (3) a written waiver is issued by the organization who established the witness point.

1.0 PART 1 - GENERAL

1.1 Section Scope

1.1.1 This specification covers engineering, design, shipping and delivery for a stand-alone facility inspection closed circuit television (CCTV) system for the Low Activity Waste Pretreatment System (LAWPS) Project (Project T5L01).

1.1.2 This specification applies to all CCTV components furnished by the CCTV VENDOR.

1.2 Related Sections

1.2.1 The following related documents contain additional requirements:

01 25 00	Substitutions and Design Changes
01 33 00	Submittals
01 40 00	Quality Assurance
01 60 00	Labeling
01 66 00	Delivery, Storage, and Handling

1.2.2 Should there be any conflicts/discrepancies amongst these documents; the VENDOR shall request a written resolution from the BUYER or BUYER's representative.

1.3 Codes and Standards

1.3.1 Work shall be performed in accordance with the referenced codes, standards, and documents for this specification.

1.3.2 The following codes and standards, of the exact issue shown, form part of the BUYER basis of design to the extent specified in the applicable sections of this document. In the event of a conflict between documents referenced herein and the requirements of this specification, the requirements of this specification shall take precedence only when this specification's requirements are more stringent or conservative. If a code or standard not listed below is to be applied to the scope (see Section 1.1), apply the latest code or standard as of April 16, 2015. VENDOR shall state, with proposal, any exceptions to these standards that, in VENDOR's opinion, are not applicable in whole or part.

1.3.3 In addition to Codes and Standards listed herein, all materials and workmanship shall be in accordance with all applicable US and local jurisdiction laws, codes and regulations.

1.3.4 Government Documents

1.3.4.1 Washington Administrative Code (WAC)
- 296-46B-010, *Inspections*

- 296-46B-903, *Equipment Standards*
- 296-46B-997, *Engineer Approval*
- 296-46B-999, *Electrical Testing Laboratory Requirements*

1.3.5 Non-Government Documents

1.3.5.1 NEMA – National Electrical Manufacturers Association
- NEMA ICS 6 1993, reaffirmed 2011, *Industrial Controls and Systems: Enclosures*

1.3.5.2 NFPA – National Fire Protection Association
- NFPA 70 2014, *National Electric Code*

1.4 System Description

1.4.1 Description

The LAWPS facility inspection CCTV system is a stand-alone high definition color closed circuit TV (Television) system used for inspecting tanks, valves and pipes. The design assumption is that such inspections will be required on an annual (TBV) basis. The cameras are radiation hardened pan, tilt and zoom (PTZ) cameras with integral LED (Light-emitting Diode) lighting capable of being lowered through 6 inch ports in the vault cover plates. The cameras can be lowered to the bottom of all tanks (approx. 45Ft) supported by the camera cable. The camera cable is connected to a stand-alone portable control unit which can display and record images along with controlling the camera. Additionally there is included a 110 VAC halogen light, capable of being lowered through the same (or different) port to provide additional illumination. The sketch in section 1.4.2 demonstrates how the system will be used.

This camera system shall use the same camera being procured for use at A & AX farms along with other components from the same VENDOR. Using the same equipment allows for reduced spares capacity and efficiencies in operator and technician training.

Expected dose rates and total dose data are provided in Table 1.8-1.

The equipment that falls under the scope of supply of this specification is as follows:

1.4.1.1 Camera – One PTZ High Definition (HD) rad hardened color CCTV camera with integral LED lights.

1.4.1.2 Camera control unit - One portable inspection station for controlling viewing and recording.

1.4.1.3 Camera cable - One 100ft HD camera cable with Kevlar braiding to support camera hanging from cable only.

1.4.1.4 Drop light - One 110VAC halogen light, or equivalent.

1.4.1.5 Drop light power cable - One 100ft 110VAC lighting cable for halogen light, or equivalent.

1.4.1.6 VENDOR shall provide for the selection of all accessories not specifically addressed in this Specification, but which are necessary to provide complete a stand-alone facility inspection CCTV system. This section shall be carried out in accordance with good engineering practices and requires review and written approval by BUYER.

1.4.2 CCTV System Overview Sketch

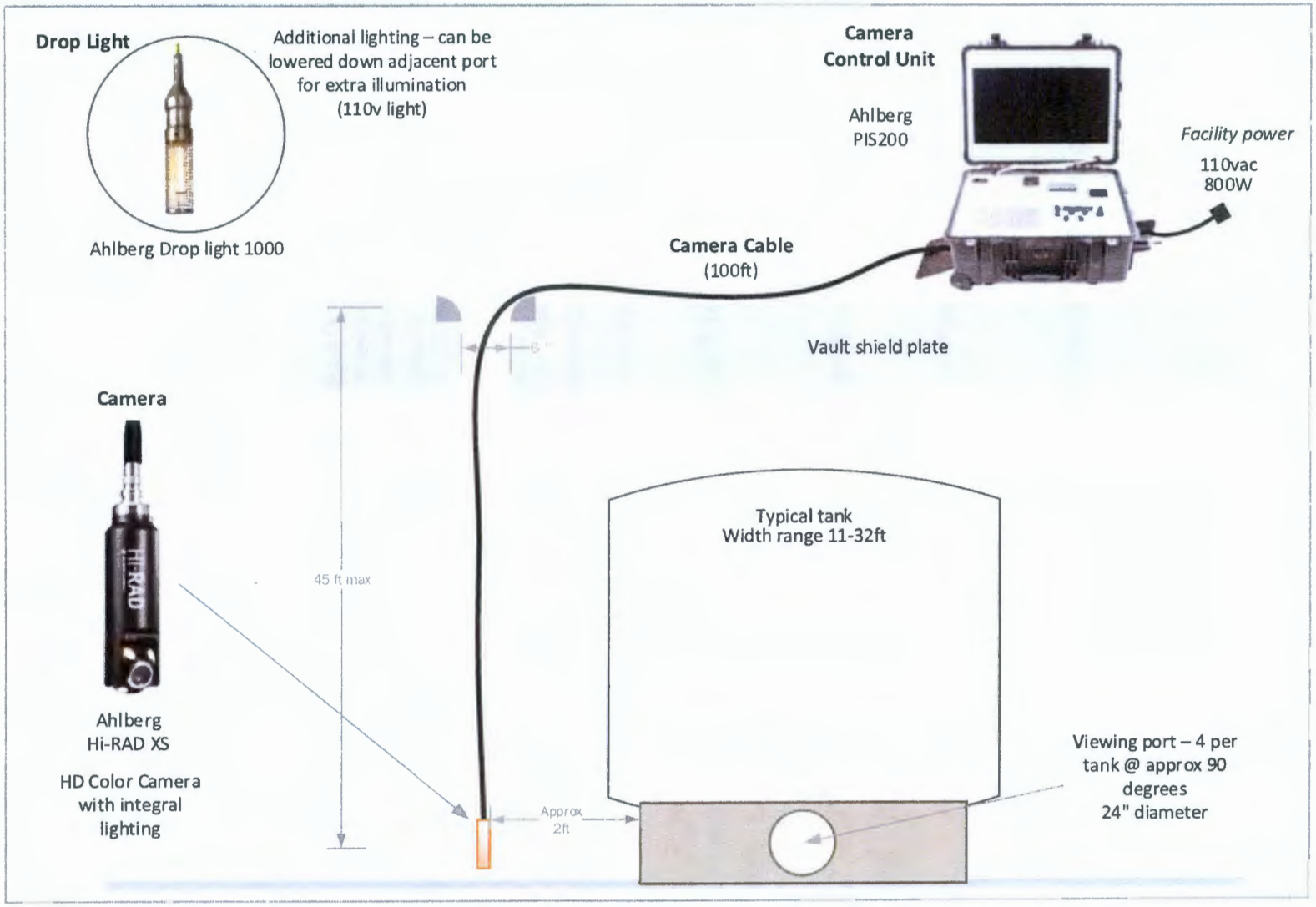

1.5 Submittals

Submittals that are listed within this section shall be prepared and processed in accordance with requirements of CSI Section 01 33 00, "Submittals," and shall include all of the required Quality Assurance documentation in accordance with CSI Section 01 40 00, "Quality Assurance."

1.5.1 List of Fabrication Codes and Standards

1.5.2 Request for Information (RFI); All RFIs shall be submitted on form A-6003-417 provided by BUYER

1.5.3 Product Submittals

1.5.3.1 Certificates of Conformance in accordance with QA Clause B79.

1.5.4 Delivery Storage and Handling

1.5.4.1 A Packaging, Handling, Shipping, and Storage Plan in accordance with QA Clause B85.

1.5.5 Final Lifetime Records

The VENDOR shall prepare documentation for Final Data Package for each item. Package shall include:

1.5.5.1 Certificates of Conformance (COCs) & Signature Verification Sheets

A. To demonstrate compliance with the Codes and Standards, VENDOR shall ensure that these products are supplied with a Certificate of Conformance in accordance with QA Clause B79.

1.5.5.2 Certificates and Reports

A. Any Field Evaluation report performed by an Nationally Recognized Testing Laboratory (NRTL) in accordance with Hanford Site QA Clause B65.
B. Certification against the procurement of potentially suspect or counterfeit items (i.e., all supplied materials shall be genuine, new, and unused), in accordance with QA Clause B76.

1.5.5.3 Manufacturers/VENDORs Data

A. Datasheets on all equipment shall be supplied in accordance with QA Clause B33.
B. Equipment shall be labeled with a part number/model number in accordance with QA Clause B32.
C. Installation and instruction manuals for all supplied equipment and accessories including but not limited to: operation, installation and maintenance.
D. Firmware/Software Records and Licenses

E. Recommended spare parts listing, in accordance with QA Clause B82.

1.6 Delivery, Storage & Handling

1.6.1 After acceptance of demonstration test by BUYER, VENDOR shall disconnect all equipment and prepare the items for shipment per CSI Section 01 66 00, "Delivery Storage and Handling", as appropriate to specified level of protection (Level B).

1.6.2 VENDOR shall provide installation instructions per section 1.5.5.3, Manufacturers/VENDORs Data.

1.6.3 VENDOR shall advise on requirements for storage of equipment.

1.6.4 Equipment shall be boxed or otherwise protected against damage or loss during shipment, and to facilitate field handling.

1.6.5 Loose components shall be securely attached to the unit or be shipped separately in a box.

1.7 Quality Assurance

1.7.1 Refer to CSI Section 01 40 00, "Quality Assurance", for Quality Assurance requirements.

1.7.2 The verification points, required by Table 1.7-1, shall be in accordance with CSI Section 01 40 00, "Quality Assurance", and verified by the BUYER, as applicable.

1.7.3 VENDOR labor shall be appropriately qualified for tasks by education, experience, and certifications.

1.7.4 Upon completion, VENDOR shall provide as electronic files all documents/information as detailed in the CSI Section 01 33 00, "Submittals.."

1.7.5 The following verification points required by this section shall be in accordance with CSI Section 01 40 00, "Quality Assurance," verified by the BUYER, as applicable.

1.7.5.1 At a minimum, the following witness and hold points for the CCTV system shall apply:

Table 1.7.-1 Hold and Witness Point Verification

Verification Point Description	Type of Verification
Prior to Demonstration	Witness
Prior to Shipping	Hold

1.7.6 The VENDOR shall provide required notifications of verification points in accordance with CSI Section 01 40 00, "Quality Assurance," as applicable, and shall not proceed past required hold points without written authorization from the BUYER QA representative.

1.7.7 Applicable QA Clauses are summarized in the table below. The full QA Clause definition and associated requirements are located in CSI Section 01 40 00, "Quality Assurance.."

Table 1.7-2 Procurement Quality Clause

MATERIAL IDENTIFICATION
B32 Identification of Items with Catalog Cut
B33 Identification of Items with Catalog Cut
TESTING AND TEST DATA
B65 Nationally Recognized Testing Laboratory (NRTL) Listed or Labeled
INSPECTION AND ACCEPTANCE CRITERIA
B76 Procurement of Potentially Suspect or Counterfeit Items
B79 Certificate of Conformance
B82 Recommended Spare Parts Listing
MATERIAL HANDLING
B85 Packaging/Shipping Procedures

1.8 Site Conditions

1.8.1 VENDOR's equipment shall be suitable for operation in the conditions of service as stated below:

1.8.1.1 The LAWPS site design site conditions are as follows:

- Outdoor temperature: -25°F to 115°F
- Outdoor relative humidity: 0 – 100%
- Barometric pressure: 14.35 psia (measured at a meteorological tower 733 feet above sea level)

1.8.1.2 The LAWPS site indoor conditions are as follows:

- Normal Operational Indoor temperature: 60°F to 100°F +/-10°F
- Off-Normal Indoor temperature: 20°F to 140°F
- Normal Operational Indoor relative humidity: 5% to 70% RH @ Normal Operational Indoor Temperature Above
- Off-Normal Indoor relative humidity: 5% to 100% RH @ Off-Normal Indoor Temperature Above.

1.8.1.3 The LAWPS vault conditions are as follows:

- Normal Operational Vault temperature: 60°F to 120°F +/-10°F
- Off-Normal Vault temperature: 20°F to 140°F
- Normal relative humidity: 5% - 50% RH @ Normal Temperature Above

1.8.2 The camera, camera cable, drop light and drop light power cable shall be suitable for operation in the following use cases over a 15 year life and be able to withstand a total integrated dose of 62,000 rad. (TBV - HOLD I-001: radiation levels to be confirmed as design progresses)

Table 1.8-1 Expected Dose Rates and Total Dose

Use Case	rad/hour (HOLD I-001 TBV)	Hours	rad/year	Years	Total Integrated Dose (rad) (HOLD I-002 TBV)
Annual inspection	10	80	800	15	12000
Ad Hoc inspections - expected case	400	5	2000	15	30000
Ad Hoc inspections - worst case	2000	5	10000	2	20000
				Total	**62000**

1.8.2.1 Annual (TBV) Inspection: Process stopped, most tanks drained, heal remaining etc. 2 week inspection. Rad/hour figure (TBV - HOLD I-001) during design progression, provides order of magnitude value.

1.8.2.2 Ad Hoc inspections - expected case: Inspection of valve or pipe etc. Process stopped, not drained, inspection 1 per year (TBV) - based on 4x 90 R/hour - expected waste stream 10, 1.5 Inch line valve seal dose. Rad/hour figure (TBV - HOLD I-001) during design progression, provides order of magnitude value.

1.8.2.3 Ad Hoc inspections - worst case: Inspection by ion exchange column for 5 hours - twice in 15 years (TBV). Rad/hour figure (TBV - HOLD I-001) during design progression, provides order of magnitude value.

2.0 PART 2 – PRODUCTS

2.1 Manufacturers

2.1.1 Sub-contracting to other manufacturers is to be in accordance with the procurement package.

2.1.2 The camera, camera control unit and camera cable shall be manufactured by Ahlberg Cameras AB.

2.1.3 For the drop light and drop light power cable, the manufacturer and model are so specified only for the purpose of establishing the type and standard of quality required. The manufacturer and/or proprietary names do not preclude the use of BUYER-approved substitutes. Where names of manufacturers are listed, the order of listing is not indicative of an order of preference. All substitutions shall be accompanied with manufacturer's catalog data.

2.2 Material

2.2.1 The equipment and software supplied shall be industry standard, commercial off-the-shelf (COTS), and be part of an existing product line.

2.2.2 All products shall be new and unused. Items not specified herein or on the drawings shall be new and of the highest quality of their respective kinds.

2.2.3 The use of non-combustible and limited-combustible materials is required to the fullest extent possible. Where there is an opportunity to choose between readily available materials, non-combustible and limited-combustible materials shall be selected.

2.2.4 VENDOR shall standardize on components used to the greatest extent possible.

2.3 Equipment

2.3.1 General Requirements

2.3.1.1 The supplied equipment shall function together to provide the display and storage of video and still images from the camera.

2.3.1.2 The supplied equipment shall be listed or labeled by an organization currently recognized by Occupational Safety and Health Administration (OSHA) as a Nationally Recognized Testing Laboratory (NRTL). Alternatively, the equipment may have a Field Evaluation performed by an NRTL at the VENDOR's shop prior to delivery.

2.3.2 Electrical Requirements

2.3.2.1 All electrical designs shall comply with NFPA 70, National Electrical Code (NEC), and Washington Administrative Code (WAC) requirements. WAC requirements include

but are not limited to: 296-46B-010, Inspections; 296-46B-903, Equipment Standards; 296-46B-997, Engineer Approval; and 296-46B-999, Electrical Testing Laboratory Requirements

2.3.2.2 VENDOR shall provide a system which will operate without failures attributed to ground problems when installed according to NEC requirements and VENDOR's recommendations.

2.3.2.3 At no time shall any voltage in excess of 120 VAC, 60 Hz be allowed in any component without express written release from BUYER.

2.4 Components

2.4.1 Cameras

2.4.1.1 The camera shall be supplied from Ahlberg Cameras AB.

2.4.1.2 A single model HI RAD XS Extra Small HD PTZ- Camera shall be supplied.

2.4.1.3 The camera shall have a service life of at least 15 years.

2.4.1.4 The camera shall be able to provide useable images when subjected to the dose rates and total dose provided in Section 1.8.2.

2.4.1.5 The camera shall be capable of being lowered vertically through 6 Inch diameter ports in shield plates.

2.4.1.6 The camera shall provide high definition images of at least 720P resolution.

2.4.1.7 The camera shall provide color images.

2.4.1.8 The camera shall have integrated lights.

2.4.1.9 The camera shall be able to be focused, at a minimum, within a range of 2ft to 32ft.

2.4.1.10 The camera shall have an optical zoom of at least 10x.

2.4.1.11 The camera shall be in a watertight (i.e. NEMA 6 or equivalent) housing to prevent damage from any exposure to liquid and to allow for decontamination.

2.4.1.12 The camera shall be capable of being supported solely by the signal cable.

2.4.1.13 The camera shall be capable of being rotated 360° while suspended by the signal cable.

2.4.1.14 The camera shall have the ability to provide images +/- 135°, from the vertical while suspended by the signal cable.

2.4.1.15 The camera shall be capable of operating in the LAWPS site indoor conditions listed in Section 1.8, including the conditions listed for the vault.

2.4.2 Camera control unit

2.4.2.1 The camera control unit shall be supplied from Ahlberg Cameras AB.

2.4.2.2 A single model PIS 200 Portable Inspection Station camera control unit shall be supplied.

2.4.2.3 The control unit shall display HD (min 720P) color images from HI-RAD XS cameras.

2.4.2.4 The control unit shall be capable of displaying images from any HI-RAD XS camera connected to it.

2.4.2.5 The control unit shall have connectors to allow the camera to be connected without tools.

2.4.2.6 The control unit shall have the capability to record HD (min 720P) color video in a non-proprietary format.

2.4.2.7 The control unit shall store the video on non-proprietary removable media.

2.4.2.8 The control unit shall be capable of storing the video for a minimum of 8hrs recording time without swapping media.

2.4.2.9 The control unit shall be capable of taking still images while recording video.

2.4.2.10 The control unit shall allow the operator to control the pan, tilt and zoom of the connected camera.

2.4.2.11 The control unit shall allow the operator to turn the camera lights on and off.

2.4.2.12 The control unit shall operate on 110VAC 60Hz at less than 15A.

2.4.2.13 The control unit shall have a power cord with a standard 110VAC 15A male plug connector.

2.4.2.14 The control unit shall be portable, such that it can be wheeled / and or carried to locations in the facility with the need to any permanent or portable cranes / lifts.

2.4.2.15 The control unit shall be capable of operating in the LAWPS site indoor conditions listed in Section 1.8, excluding the conditions listed for the vault.

2.4.3 Camera cable

2.4.3.1 The camera cable shall be supplied from Ahlberg Cameras AB.

2.4.3.2 A single 100ft length of model T30-10K Camera Cable shall be supplied.

2.4.3.3 The camera cable shall have a service life of at least 15 years.

2.4.3.4 The camera cable shall be able to provide useable images when subjected to the dose rates and total dose provided in Section 1.8.2.

2.4.3.5 The camera cable shall have a waterproof (i.e. NEMA 6 or equivalent) connector, suitable for connecting to the camera control unit without tools, on the end connecting to the camera.

2.4.3.6 The camera cable shall have a connector, suitable for connecting to the camera control unit without tools, on one end.

2.4.3.7 The camera cable shall be capable of supporting the weight of the camera hanging at a height of at least 50ft.

2.4.3.8 The camera cable shall be capable of transmitting HD (min 720P) color images between the camera and control unit.

2.4.3.9 The camera cable shall be capable of operating in the LAWPS site indoor conditions listed in Section 1.8, including the conditions listed for the vault.

2.4.4 Drop light

2.4.4.1 The drop light shall be an Ahlberg Cameras, model Drop Light 1000, or equivalent.

2.4.4.2 A single drop light shall be supplied.

2.4.4.3 The drop light shall provide 180° illumination.

2.4.4.4 The drop light shall have a service life of at least 15 years.

2.4.4.5 The drop light shall be able to provide illumination when subjected to the dose rates and total dose provided in Section 1.8.2.

2.4.4.6 The drop light shall be capable of being lowered vertically through 6 Inch diameter ports in shield plates.

2.4.4.7 The drop light (and connector if used) shall be capable of being supported solely by the power cable.

2.4.4.8 The drop light shall be powered by 110VAC at less than 15A combined load for all devices provided.

2.4.4.9 The drop light shall be in a watertight housing (i.e. NEMA 6 or equivalent) to prevent damage from any exposure to liquid.

2.4.4.10 The drop light shall be capable of operating in the LAWPS site indoor conditions listed in Section 1.8, including the conditions listed for the vault.

2.4.5 Drop light power cable

2.4.5.1 The drop light power cable shall be Ahlberg Cameras, model T3X2.5 or equivalent.

2.4.5.2 A single 100ft length of drop light power cable shall be supplied.

2.4.5.3 The drop light power cable shall have a service life of at least 15 years.

2.4.5.4 The drop light power cable shall be able to provide illumination when subjected to the dose rates and total dose provided in Section 1.8.2.

2.4.5.5 The drop light power cable shall be either wired directly to the drop light or be connected by means of a waterproof (i.e. NEMA 6 or equivalent) connector.

2.4.5.6 The drop light power cable shall be capable of supporting the weight of the camera hanging at a height of at least 50ft.

2.4.5.7 The drop light power cable shall have a standard 110VAC 15A plug connector.

2.4.5.8 The drop light power cable shall be capable of operating in the LAWPS site indoor conditions listed in Section 1.8, including the conditions listed for the vault.

2.4.6 Required Spare Components

As this camera system uses the same camera being procured for use at A & AX farms, spare cameras will be coordinated with A & AX farm spares.

The following spare parts shall be supplied:

A. Camera Cable (Reference section 2.4.3)
B. Drop Light (Reference section 2.4.4)
C. Drop Light power cable (Reference section 2.4.5)

Price and estimated lead time shall be provided for the following parts:

A. Camera (Reference section 2.4.1)

2.5 Fabrication

2.5.1 Prohibited and Hazardous Products

2.5.1.1 VENDOR shall provide no equipment that contains either mercury or asbestos. In the event that no workable substitute is available, VENDOR must obtain a written release from the BUYER on an item-by-item basis before providing components containing these materials.

2.6 Shop Quality Control

2.6.1 Inspections

2.6.1.1 Prior to any inspection and testing performed and/or witnessed by BUYER, VENDOR shall perform adequate inspections and tests to ensure that the equipment meets specifications and is suitable for the intended service. VENDOR's own inspections shall be appropriate for the intended purpose and shall conform to good industry practices and to applicable regulations, codes and standards.

2.6.1.2 VENDOR shall adequately document the inspections and shall maintain adequate files of such information and make such files available to BUYER upon request.

2.6.1.3 BUYER intends to provide and/or require inspection and testing of system prior to delivery, with witnessing as may be specified, sufficient to ensure that all

specifications have been met and that the equipment will be satisfactory for its intended service.

2.6.1.4 All inspection and testing requirements will be in accordance with accepted codes and standards and approved test plans with BUYER's established hold/witness points as identified in the contract documents.

2.6.2 Shop Testing

2.6.2.1 Detailed requirements for shop testing are found in section 3.5, Demonstration.

3.0 PART 3 – EXECUTION

3.1 Preparation

3.1.1 Not Used

3.2 Erection, Installation & Application

3.2.1 Not Used

3.3 Field Quality Control

3.3.1 Not Used

3.4 Adjusting and Cleaning

3.4.1 Not Used

3.5 Demonstration

3.5.1 All defects in materials, wiring and assembly detected as a result of testing shall be repaired or replaced by the VENDOR at no additional cost to BUYER.

3.5.2 Test results shall be recorded and submitted to BUYER.

3.5.3 The VENDOR shall be responsible for performing and documenting all inspections and testing necessary to demonstrate compliance with all equipment and component requirements identified in this specification as outlined in the Test plan.

3.5.4 Final Inspection Report

The VENDOR shall prepare a final inspection report for each item which documents the result of the final inspection. This inspection shall include and confirm as minimum the following:

3.5.4.1 All identified inspection documentation is complete with all inspection signatures and assembled as defined in CSI Section 01 33 00, "Submittals," and section 1.5.5.

3.5.4.2 Compliance with all equipment and component requirements identified in this specification.

3.5.4.3 Overall visual inspection to cover any damage to vulnerable equipment items to include but not limited to instruments, electrical or instrument cable, small bore piping, and seals, etc.

3.5.4.4 Equipment orientation/configuration is correct.

3.5.4.5 Labeling to include correct item identification and marking.

3.6 Protection

3.6.1 Not Used

4.0 LIST OF APPENDICES

4.1.1 Not Used

CALCULATION

31269-16-CALC-0401

CALCULATION FOR PIPING WALL THICKNESS FOR NON-SAFETY SIGNIFICANT PIPE MATERIAL CLASSES

AECOM ATKINS AREVA CALCULATION COVER SHEET		Calculation No. 31269-16-CALC-0401			
		Prel	Final	Void	Revision
			X		0
CLIENT	Washington River Protection Solutions, LLC	**Discipline**	Piping		
PROJECT TITLE	Low Activity Waste Pretretment System	**Project No.**	31269 (T5L01)		
SUBJECT/FEATURE	Calculation for Piping Wall Thickness for Non-Safety Significant Pipe Material Classes	**No. of Sheets**	22		

CALCULATION OBJECTIVE

Determine the required piping wall thickness for all non-safety significant piping line classes (P1, P6, P8 and P10) based on the specification design conditions. Calculations shall be in accordance with the requirements of Section 304/Section A304 "Pressure Design of Components" in ASME B31.3 and the respective material specification (ASTM/AWWA).

RESULTS / CONCLUSIONS

Attachments 8.3 – 8.6 have specific sizes indicated.

- P1; Carbon Steel ASTM A53 Gr. B ERW
  Threaded Joints: ½" – 2": Schedule XS;
  Welded Joints: 3" – 16": STD Wall

- P6; Stainless Steel ASTM TP304/304L SMLS (½" – 4") / EFW 100% X-Ray (6" – 12")
  Threaded Joint: ½" – 1½": Schedule 80S;
  Welded Joints: ½" – 4": Schedule 40S, 6" – 12": Schedule 10S

- P8; Carbon Steel ASTM A106 Gr. B SMLS
  Welded Joints: 4" – 6": STD Wall

- P10; PVC ASTM D1784 CL 12454 / AWWA C-900
  Mechanical Joint: 4" – 12": DR 18

ASSUMPTIONS / OPEN ITEMS

There are no open items in this calculation.

AECOM ATKINS AREVA

CALCULATION COVER SHEET

Calculation No. 31269-16-CALC-0401			
Prel	Final	Void	Revision
	X		0

CLIENT	Washington River Protection Solutions, LLC	**Discipline**	Piping
PROJECT TITLE	Low Activity Waste Pretretment System	**Project No.**	31269 (T5L01)
SUBJECT/FEATURE	Calculation for Piping Wall Thickness for Non-Safety Significant Pipe Material Classes	**No. of Sheets**	22

DESIGN CRITERIA / DESIGN BASIS (with Reference to Source of Data)

The required wall thickness for piping material classes P1, P6 and P8 were determined based on the calculation for straight pipe under internal pressure per ASME B31.3 Section 304 "Pressure Design of Components".

The required wall thickness for piping material class P10 was determined based on AWWA C900 Table 1, which specifies DR rating and the associated pressure class at 73.4°F.

REFERENCES / SOURCE DOCUMENTS

See Calculation Sheet, Section 4.0.

FOR CALCULATIONS GENERATED BY COMPUTER PROGRAM

Computer Program Name	Version or Date	Operating System Type	Validated
Excel Spreadsheet: "Minimum required Wall Thickness of Straight Pipe Under Internal Pressure, Per ASME B31.3"	Version 1.5 (9/15/16)	Window 7 (64 Bit)	Not Required. Checked by Hand Calculation.

QUALITY CLASSIFICATION		TBD	YES	NO
	SAFETY RELATED?			X
	DESIGN VERIFICATION REQUIRED?			X

Quality Level

FQA ☐ EQA ☐ CQA ☒ TBD ☐

AECOM ATKINS AREVA

CALCULATION COVER SHEET

Calculation No.			
31269-16-CALC-0401			
Prel	Final	Void	Revision
	X		0

CLIENT	Washington River Protection Solutions, LLC	**Discipline**	Piping
PROJECT TITLE	Low Activity Waste Pretretment System	**Project No.**	31269 (T5L01)
SUBJECT/FEATURE	Calculation for Piping Wall Thickness for Non-Safety Significant Pipe Material Classes	**No. of Sheets**	22

REV. NO.	REVISION REASON	PREPARED BY	DATE	CHECKED BY	DATE	VERIFIED BY	DATE	APPROVED BY	DATE
0	Final	REB	5/15/17	JCJ	5/15/17	-	-	MSJ	5/17/17
		(G. Jones for REB)							

Sealed / Stamped By: MATTHEW S. JEND PE

Registration No. 54709 State WASHINGTON

Date: MAY 17, 2017

PE Seal or Stamp

MATTHEW SEAN JEND
STATE OF WASHINGTON
54709
REGISTERED
PROFESSIONAL ENGINEER

5/17/17

FOR PERMITTING
MSJ 5/17/17

AECOM ATKINS AREVA

CALCULATION COVER SHEET

Calculation No. 31269-16-CALC-0401			
Prel	Final	Void	Revision
	X		0

CLIENT	Washington River Protection Solutions, LLC	**Discipline**	Piping
PROJECT TITLE	Low Activity Waste Pretretment System	**Project No.**	31269 (T5L01)
SUBJECT/FEATURE	Calculation for Piping Wall Thickness for Non-Safety Significant Pipe Material Classes	**No. of Sheets**	22

CALCULATION REVISIONS PAGE

Rev. No.	Pages	Description of Changes
0	All	Approved for Design

TABLE OF CONTENTS

1.0 CALCULATION OBJECTIVE 1

2.0 DESIGN CRITERIA / DESIGN BASIS 1

3.0 ASSUMPTIONS / OPEN ITEMS 7

4.0 REFERENCES / SOURCE DOCUMENTS 7

5.0 APPROACH / METHODOLOGY 8

6.0 COMPUTATIONS 9

7.0 RESULTS / CONCLUSIONS 9

8.0 ATTACHMENTS 9

1.0 CALCULATION OBJECTIVE

Determine the required piping wall thicknesses for all non-safety significant piping line classes (P1, P6, P8 and P10) based on the specification design conditions. Calculations shall be in accordance with the requirements of Section 304/Section A304 "Pressure Design of Components" in ASME B31.3 and the respective material specification (ASTM/AWWA).

2.0 DESIGN CRITERIA / DESIGN BASIS

The required wall thicknesses for piping material classes P1, P6 and P8 were determined based on the calculation for straight pipe under internal pressure per ASME B31.3 Section 304 "Pressure Design of Components". The equations and associated nomenclature is as follows.

ASME B31.3 Section 304.1.1.a Equation 2:

$$t_m = t + c \qquad (2)$$

ASME B31.3 Section 304.1.1.b:

c = sum of the mechanical allowances (thread or groove depth) plus corrosion and erosion allowances. For threaded components, the nominal thread depth (dimension h of ASME B1.20.1, or equivalent) shall apply. For machined surfaces or grooves where the tolerance is not specified, the tolerance shall be assumed to be 0.5 mm (0.02 in.) in addition to the specified depth of the cut.

D = outside diameter of pipe as listed in tables of standards or specifications or as measured

d = inside diameter of pipe. For pressure design calculation, the inside diameter of the pipe is the maximum value allowable under the purchase specification.

E = quality factor from Table A-1A or A-1B

P = internal design gage pressure

S = stress value for material from Table A-1

T = pipe wall thickness (measured or minimum in accordance with the purchase specification)

t = pressure design thickness, as calculated in accordance with para. 304.1.2 for internal pressure or as determined in accordance with para. 304.1.3 for external pressure

t_m = minimum required thickness, including mechanical, corrosion, and erosion allowances

W = weld joint strength reduction factor in accordance with para. 302.3.5(e)

Y = coefficient from Table 304.1.1, valid for $t < D/6$ and for materials shown. The value of Y may be interpolated for intermediate temperatures.

ASME B31.3 Section 304.1.2 Equation 3a:

$$t = \frac{PD}{2(SEW + PY)} \qquad (3a)$$

Threaded pipe was determined using the greater of the thickness calculation per ASME B31.3 Section 304.1.2 or the thickness shown in ASME B31.3 Table 314.2.1.

Table 314.2.1 Minimum Thickness of External Threaded Components

Fluid Service	Notch-Sensitive Material	Size Range [Note (1)] DN	Size Range [Note (1)] NPS	Min. Wall Thickness [Note (2)]
Normal	Yes [Note (3)]	≤ 40	≤ 1½	Sch. 80
		50	2	Sch. 40
		65–150	2½–6	Sch. 40
Normal	No [Note (4)]	≤ 50	≤ 2	Sch. 40S
		65–150	2½–6	Sch. 40S
Category D	Either	≤ 300	≤ 12	In accordance with para. 304.1.1

GENERAL NOTE: Use the greater of para. 304.1.1 or thickness shown in this Table.

NOTES:

(1) For sizes > DN 50 (NPS 2), the joint shall be safeguarded (see Appendix G) for a fluid service that is flammable, toxic, or damaging to human tissue.

(2) Nominal wall thicknesses is listed for Sch. 40 and 80 in ASME B36.10M and for Sch. 40S in ASME B36.19M.

(3) For example, carbon steel.

(4) For example, austenitic stainless steel.

Inputs to this calculation were compiled as seen below:

TABLE 1

Piping Line Class[1]	Nominal Pipe Size[2] / End Type	Internal Design Gage Pressure (P) (psig) and Design Temperature (T) (°F)[3]	Corrosion Allowance (inches)[4]	Material Classification[4]
P1	½" – 2" Threaded	150 psig @ -20/100°F 150 psig @ 200°F	0.063"	ASTM A53 Gr. B, ERW
	3" – 16" Welded			
P6	½" – 1½" Threaded	275 psig @ -20/100°F 230 psig @ 200°F	0.063"	ASTM A312 TP304/304L, SMLS
	½" – 4" Welded			
	6" – 12" Welded			ASTM A312 TP304/304L, EFW (100% X-Ray)
P8	4" – 6" Welded	50 psig @ -20/100°F 50 psig @ 150°F	0.063"	ASTM A106 Gr. B, SMLS

Notes to Table 1:

1. All non-safety significant piping line classes are per ASME B31.3 for Normal Fluid Service.
2. Outside diameter of pipe is as listed in ASME B36.10M or ASME B36.19M, as appropriate.
3. Internal Design Gage Pressure and Design Temperature for Piping Line Class P8 was based on 24590-WTP-ICD-MG-030 "ICD 30 Interface Control Document for Direct LAW Feed."
4. The corrosion allowance and recommended material are in accordance with 31269-21-RPT-0001.

Additional inputs, in accordance with ASME B31.3, are as follows:

TABLE 2 (Information per ASME B31.3 (2012))

Piping Line Class	Quality Factor (E) (Table A-1B)	Stress Value (S) (Table A-1)	Weld Joint (W) (Para. 302.3.5.e)	Coefficient (Y) (Table 304.1.1)
P1	0.85	20 ksi	1	0.4
P6	1	20 ksi	1	0.4
P8	1	20 ksi	1	0.4

Additionally, calculations were completed to determine the minimum required thickness of straight pipe prior to bending in order to be sufficient to meet the minimum thickness requirements after bending for 2.5D bends for piping class P8. Calculations were completed for both 2D and 3D bends and the results were interpolated.

Minimum wall thickness after bending, in its finished form, was calculated in accordance with ASME B31.3 Section 304.2.1 "Pipe Bends" and then in order to compensate for wall thinning from bending, a calculation was completed to determine the appropriate material allowance considering the bending method, material, pipe size, bend radius and the bend fabricator's equipment in accordance with PFI ES-24 Section 7.0 "Material Allowances." The equations and associated nomenclature are as follows.

ASME B31.3 Section 304.2.1:

304.2.1 Pipe Bends. The minimum required thickness, t_m, of a bend, after bending, in its finished form, shall be determined in accordance with eqs. (2) and (3c)

ASME B31.3 Section 304.1.1.a Equation 2:

$$t_m = t + c \qquad (2)$$

ASME B31.3 Section 304.2.1 Equation 3c – 3e:

$$t = \frac{PD}{2[(SEW/I) + PY]} \qquad (3c)$$

where at the intrados (inside bend radius)

$$I = \frac{4(R_1/D) - 1}{4(R_1/D) - 2} \qquad (3d)$$

and at the extrados (outside bend radius)

$$I = \frac{4(R_1/D) + 1}{4(R_1/D) + 2} \qquad (3e)$$

and at the sidewall on the bend centerline radius, $I = 1.0$, and where

R_1 = bend radius of welding elbow or pipe bend

PFI ES-24 Section 7.0:

7.0 MATERIAL ALLOWANCES

7.1 The following recommendations for material allowances will vary with the bending method, material, pipe size, bend radius and the bend fabricator's equipment. It is suggested that the purchaser contact the fabricator for specific information.

7.2 To compensate for wall thinning from bending, Tables 7.2.1, 7.2.2, 7.2.3, and 7.2.4 can be used as a guide for ordering pipe for the appropriate process. Experience indicates that the minimum thickness of straight pipe shown in the tables should be sufficient to meet the minimum thickness requirements after bending. Interpolation is permissible for bending to intermediate radii.

PFI ES-24 Table 7.2.1 – Table 7.2.4:

TABLE 7.2.1
FURNACE BENDING

Bend Radius	Minimum Thickness Prior to Bending
6D	1.06 tm
5D	1.08 tm
4D	1.14 tm
3D	1.25 tm

TABLE 7.2.2
INDUCTION AND INCREMENTAL BENDING

Bend Radius	Minimum Thickness Prior to Bending
6Dn	1.06 tm
5Dn	1.08 tm
4Dn	1.10 tm
3Dn	1.14 tm
2Dn	1.22 tm
1.5Dn	1.30 tm

TABLE 7.2.3
ROTARY DRAW BENDING

Bend Radius	Minimum Thickness Prior to Bending
6Dn	1.09 tm
5Dn	1.14 tm
4Dn	1.20 tm
3Dn	1.28 tm

TABLE 7.2.4
RAM AND ROLL BENDING

Bend Radius	Minimum Thickness Prior to Bending
6Dn	1.08 tm
5Dn	1.10 tm
4Dn	1.13 tm
3Dn	1.17 tm

Inputs to this calculation were as summarized in Table 1. The maximum thinning for each bend radius as a result of the manufacturing processes listed in PFI ES-24 Tables 7.2.1-7.2.4 was used to calculate the most conservative required minimum wall thickness prior to bending.

Lastly, the mill tolerance was verified in the respective ASTM. The minimum wall thickness was specified to not be more than 12.5% under the specified wall thickness.

The required wall thickness for piping material class P10 was determined based on AWWA C900 Table 1, which specifies DR rating and the associated pressure class at 73.4°F. AWWA C900 calculates the pressure class using equation 1 per AWWA C900 Section 4.7.

Table 1 Dimensions, pressure classes, and dimension ratios (DRs) for PVC* pipe with cast-iron-pipe-equivalent ODs

Nominal Size	Pressure Class at 73.4°F (23°C)			OD—in. (mm)				Wall Thickness—in. (mm)			
in.	psi	(kPa)	DR	Average		Tolerance		Minimum		Tolerance	
4	165	(1,140)	25	4.800	(121.9)	±0.009	(0.23)	0.192	(4.88)	+0.023	(0.58)
4	235	(1,620)	18	4.800	(121.9)	±0.009	(0.23)	0.267	(6.78)	+0.032	(0.81)
4	305	(2,100)	14	4.800	(121.9)	±0.009	(0.23)	0.343	(8.71)	+0.041	(1.04)
6	165	(1,140)	25	6.900	(175.3)	±0.011	(0.28)	0.276	(7.01)	+0.033	(0.84)
6	235	(1,620)	18	6.900	(175.3)	±0.011	(0.28)	0.383	(9.73)	+0.046	(0.17)
6	305	(2,100)	14	6.900	(175.3)	±0.011	(0.28)	0.493	(12.52)	+0.059	(1.50)
8	165	(1,140)	25	9.050	(229.9)	±0.015	(0.38)	0.362	(9.19)	+0.043	(1.09)
8	235	(1,620)	18	9.050	(229.9)	±0.015	(0.38)	0.503	(12.78)	+0.060	(1.52)
8	305	(2,100)	14	9.050	(229.9)	±0.015	(0.38)	0.646	(16.41)	+0.078	(1.98)
10	165	(1,140)	25	11.100	(281.9)	±0.015	(0.38)	0.444	(11.28)	+0.053	(1.35)
10	235	(1,620)	18	11.100	(281.9)	±0.015	(0.38)	0.617	(15.67)	+0.074	(1.88)
10	305	(2,100)	14	11.100	(281.9)	±0.015	(0.38)	0.793	(20.14)	+0.095	(2.41)
12	165	(1,140)	25	13.200	(335.3)	±0.015	(0.38)	0.528	(13.41)	+0.063	(1.60)
12	235	(1,620)	18	13.200	(335.3)	±0.015	(0.38)	0.733	(18.62)	+0.088	(2.24)
12	305	(2,100)	14	13.200	(335.3)	±0.015	(0.38)	0.943	(23.95)	+0.113	(2.87)

*Hydrostatic design stress (HDS) = 2,000 psi

3.0 ASSUMPTIONS / OPEN ITEMS

There are no open items in this calculation.

4.0 REFERENCES / SOURCE DOCUMENTS

1. Excel Spreadsheet (Version 1.5); "*Minimum Required Wall Thickness of Straight Pipe Under Internal Pressure, Per ASME B31.3*"
2. Excel Spreadsheet (Version 1.0); "*Wall Thickness Prior to Bending, Per ASME B31.3 (2012) and PFI ES-24 (2013) Section 7*"
3. ASME B31.3 (2012); Process Piping

4. ASME B36.10M (2004 R2010); *Welded and Seamless Wrought Steel Pipe*
5. ASME B36.19M (2004 R2010); *Stainless Steel Pipe*
6. ASTM A106/A106M (2014); *Standard Specification for Seamless Carbon Steel Pipe for High-Temperature Service*
7. ASTM A312/A312M (2015); *Standard Specification for Seamless, Welded and Heavily Cold Worked Austenitic Stainless Steel Pipes*
8. ASTM A53/A53M (2012); *Standard Specification for Pipe, Steel, Black, Hot-Dipped, Zinc-Coated, Welded and Seamless*
9. ASTM D1784 (2011); *Standard Specification for Rigid Poly(Vinyl Chloride) (PVC) Compounds and Chlorinated Poly(Vinyl Chloride) (CPVC) Compounds*
10. ANSI/AWWA C900 (2008); *Polyvinyl Chloride (PVC) Pressure Pipe and Fabricated Fittings, 4 in. Through 12 in. (100 mm Through 300 mm), for Water Distribution*
11. 24590-WPT-ICD-MG-01-030 (Revision 0); *ICD 30 – Interface Control Document for Direct LAW Feed*
12. 31269-16-2-001 (Revision 0); *Piping Materials Specification*
13. 31269-22-DBD-001 (Revision 1); *Design Basis Document*
14. 31269-21-RPT-0001 (Revision 0); *Material of Construction Evaluation*

5.0 APPROACH / METHODOLOGY

Excel Spreadsheet (Version 1.5); *"Minimum Required Wall Thickness of Straight Pipe Under Internal Pressure, Per ASME B31.3,"* was developed in order to facilitate a semi-automatic calculation of straight sections of pipe per ASME B31.3. This spreadsheet has been locked in order to prevent any manual modification. A printout of all macros and formulas can be seen in Attachment 8.1. This calculation was verified and is substantiated by a manual wall thickness calculation as seen in Attachment 8.2.

Excel Spreadsheet Version (1.0); "*Wall Thickness Prior to Bending, Per ASME B31.3 (2012) and PFI ES-24 (2013) Section 7*" was developed in order to facilitate a semi-automatic calculation of pipe bends per ASME B31.3 and PFI ES-24. This spreadsheet has been locked in order to prevent any manual modification. A printout of all macros and formulas can be seen in Attachment 8.7. This calculation was verified and is substantiated by a manual wall thickness calculation as seen in Attachment 8.8.

6.0 COMPUTATIONS

Computations can be seen in Attachments 8.3 – 8.6.

7.0 RESULTS / CONCLUSIONS

Attachments 8.3 – 8.6 have specific sizes indicated.

- P1; Carbon Steel ASTM A53 Gr. B ERW
  Threaded Joints: ½" – 2": Schedule XS;
  Welded Joints: 3" – 16": STD Wall

- P6; Stainless Steel ASTM TP304/304L SMLS (½" – 4") / EFW 100% X-Ray (6" – 12")
  Threaded Joint: ½" – 1½": Schedule 80S;
  Welded Joints: ½" – 4": Schedule 40S, 6" – 12": Schedule 10S

- P8; Carbon Steel ASTM A106 Gr. B SMLS
  Welded Joints: 4" – 6": STD Wall

- P10; PVC ASTM D1784 CL 12454 / AWWA C-900
  Mechanical Joint: 4" – 12": DR 18

8.0 ATTACHMENTS

8.1. Macro and Formula Print out of Excel Spreadsheet (Version 1.5); *"Minimum Required Wall Thickness of Straight Pipe Under Internal Pressure, Per ASME B31.3"*

8.2. Manual Minimum Wall Thickness Calculation per ASME B31.3 – Pipe Line Class P1

8.3. Excel Spreadsheet (Version 1.5); *"Minimum Required Wall Thickness of Straight Pipe Under Internal Pressure, Per ASME B31.3"* – Pipe Line Class P1

8.4. Excel Spreadsheet (Version 1.5); *"Minimum Required Wall Thickness of Straight Pipe Under Internal Pressure, Per ASME B31.3"* – Pipe Line Class P6

8.5. Manual Minimum Wall Thickness Calculation per ASME B31.3 – Pipe Line Class P6

8.6. Excel Spreadsheet (Version 1.5); *"Minimum Required Wall Thickness of Straight Pipe Under Internal Pressure, Per ASME B31.3"* – Pipe Line Class P8

8.7. Macro and Formula Print out of Excel Spreadsheet Version (1.0); "*Wall Thickness Prior to Bending, Per ASME B31.3 (2012) and PFI ES-24 (2013) Section 7*"

8.8. Manual Minimum Wall Thickness Calculation per ASME B31.3 for Pipe Bends – Pipe Line Class P8

8.9. Excel Spreadsheet (Version 1.0); *"Wall Thickness Prior to Bending, Per ASME B31.3 (2012) and PFI ES-24 (2013) Section 7" – Pipe Line Class P8*

ATTACHMENT 8.1 - MACRO AND FORMULA PRINT OUT OF EXCEL SPREADSHEET (VERSION 1.5); "MINIMUM REQUIRED WALL THICKNESS OF STRAIGHT PIPE UNDER INTERNAL PRESSURE, PER ASME B31.3"

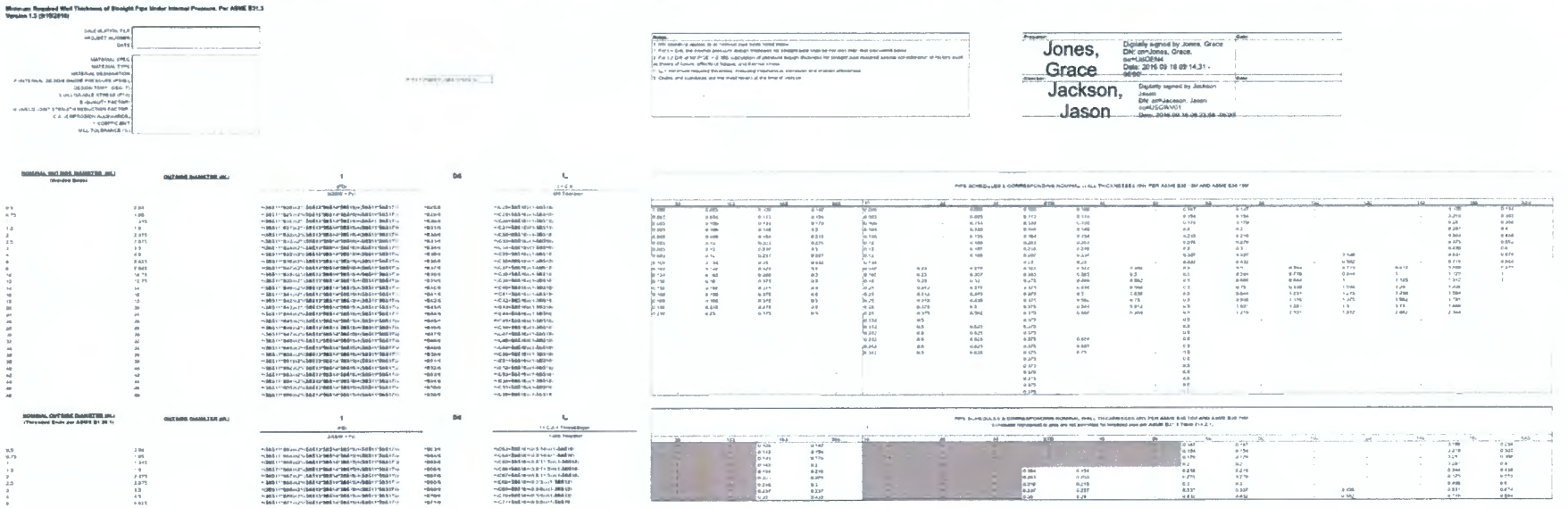

ATTACHMENT 8.2 - MANUAL MINIMUM WALL THICKNESS CALCULATION PER ASME B31.3 – PIPE LINE CLASS P1

PIPE WALL THICKNESS CALCULATION PER ASME B31.3 "STRAIGHT PIPE UNDER INTERNAL PRESSURE"

CODE	ASME B31.3	OTHER	-	CALC. NO.	-
MATERIAL	Carbon Steel	ASTM	A53	PREPARED BY:	Jones, Grace
GRADE	B	CLASS	-		
SEAMLESS	ERW	WELDED (W)	1.00		
PRESSURE (P)	150	TEMP.	200°F	CHECKED BY:	Jason C. Jackson
STRESS (S)	20000	FACTOR (γ)	0.4		
BASED ON	0.85 LONG, JT. FACTOR (E)				
CORROSION ALLOWANCE (C)		0.0630	MILL TOLERANCE (M) %		0.125

Digitally signed by Jones, Grace
DN: cn=Jones, Grace, ou=HUSDEM4
Date: 2016.09.26 17:07:25 -06'00'

Digitally signed by Jason C. Jackson
DN: cn=Jason C. Jackson, o=AECOM, ou=Engineering, email=jason.jackson@aecom.com, c=US
Date: 2017.03.16 14:01:06 -06'00'

$t_m =$	$\frac{P}{2(SEW+P\gamma)}$	x D + C / (1- M)		k =	$\frac{P}{2(SEW+P\gamma)}$		=	$\frac{150}{34120}$		=	0.004396			NOMINAL SIZE
	k	x	D	=		+	C	=	/	(1-M)	t_m			
	0.004396	x	0.840	=	0.0037	+	0.063	=	0.0667	/	0.875	= 0.0762		1/2
												T=	SCH:	

t_m = MINIMUM REQUIRED THICKNESS

D = OUTSIDE DIAMETER IN INCHES

T = SELECTED WALL THICKNESS

k = CALCULATED CONSTANT

M = MILL TOLERANCE = (PER ASTM SPEC)

ATTACHMENT 8.3 – EXCEL SPREADSHEET (VERSION 1.5); "MINIMUM REQUIRED WALL THICKNESS OF STRAIGHT PIPE UNDER INTERNAL PRESSURE, PER ASME B31.3" – PIPE LINE CLASS P1

Minimum Required Wall Thickness of Straight Pipe Under Internal Pressure, Per ASME B31.3
Version 1.5 (8/15/2016)

CALCULATION FILE	-
PROJECT NUMBER	31269
DATE	9/26/2016
MATERIAL SPEC	P1
MATERIAL TYPE	ERW
MATERIAL DESIGNATION	A53 GR. B
P: INTERNAL DESIGN GAUGE PRESSURE (PSIG)	150
DESIGN TEMP. (DEG. F)	200
S: ALLOWABLE STRESS (PSI)	20000
E: QUALITY FACTOR	0.85
W: WELD JOINT STRENGTH REDUCTION FACTOR	1.00
C.A.: CORROSION ALLOWANCE	0.063
Y: COEFFICIENT	0.4
MILL TOLERANCE (%)	0.125

P/SE = 0.009

Notes:
1. Mill tolerance applies to all nominal pipe sizes listed below.
2. For t < D/6, the internal pressure design thickness for straight pipe shall be not less than that calculated below.
3. For t ≥ D/6 or for P/SE > 0.385, calculation of pressure design thickness for straight pipe requires special consideration of factors such as theory of failure, effects of fatigue, and thermal stress.
4. L = minimum required thickness, including mechanical, corrosion and erosion allowances.
5. Codes and standards are the most recent at the time of Version.

Preparer: Jones, Grace — Date: Digitally signed by Jones, Grace DN: cn=Jones, Grace, ou=USDEN4 Date: 2016.09.26 17:12:35 -

Checker: Jason C. Jackson — Date: Digitally signed by Jason C. Jackson DN: cn=Jason C. Jackson, o=AECOM, ou=Piping, email=jason.jacksonuae@aecom.com, c=US Date: 2017.05.10 14:32:16 -06'00'

NOMINAL OUTSIDE DIAMETER (IN.) (Welded Ends)	OUTSIDE DIAMETER (IN.)	t (IN.) = P·D / (2(SE·W + P·Y))	D/6	t_m = t + C.A. / (1-Mill Tolerance)
0.50	0.840	0.0037	0.14	0.0762
0.75	1.050	0.0046	0.18	0.0773
1.00	1.315	0.0058	0.22	0.0786
1.50	1.900	0.0084	0.32	0.0815
2.00	2.375	0.0104	0.40	0.0839
2.50	2.875	0.0128	0.48	0.0864
3.00	3.500	0.0154	0.58	0.0896
4.00	4.500	0.0198	0.75	0.0946
6.00	6.625	0.0291	1.10	0.1053
8.00	8.625	0.0379	1.44	0.1153
10.00	10.750	0.0473	1.79	0.1260
12.00	12.750	0.0561	2.13	0.1361
14.00	14.000	0.0615	2.33	0.1423
16.00	16.000	0.0703	2.67	0.1524
18.00	18.000	0.0794	3.00	0.1624
20.00	20.000	0.0879	3.33	0.1723
24.00	24.000	0.1055	4.00	0.1920
26.00	26.000	0.1143	4.33	0.2020
28.00	28.000	0.1231	4.67	0.2127
30.00	30.000	0.1319	5.00	0.2227
32.00	32.000	0.1407	5.33	0.2328
34.00	34.000	0.1495	5.67	0.2428
36.00	36.000	0.1583	6.00	0.2529
38.00	38.000	0.1671	6.33	0.2629
40.00	40.000	0.1759	6.67	0.2730
42.00	42.000	0.1848	7.00	0.2830
44.00	44.000	0.1936	7.33	0.2931
46.00	46.000	0.2022	7.67	0.3031
48.00	48.000	0.2110	8.00	0.3132

PIPE SCHEDULES & CORRESPONDING NOMINAL WALL THICKNESSES (IN), PER ASME B36.10M AND ASME B36.19M

	5S	10S	40S	80S	10	20	30	STD	40	60	XS	80	100	120	140	160	XXS
0.50	0.065	0.083	0.109	0.147	0.083	-	0.095	0.109	0.109	-	0.147	0.147	-	-	-	0.188	0.294
0.75	0.065	0.083	0.113	0.154	0.083	-	0.095	0.113	0.113	-	0.154	0.154	-	-	-	0.219	0.308
1.00	0.065	0.109	0.133	0.179	0.109	-	0.114	0.133	0.133	-	0.179	0.179	-	-	-	0.250	0.358
1.50	0.065	0.109	0.145	0.200	0.109	-	0.125	0.145	0.145	-	0.200	0.200	-	-	-	0.281	0.400
2.00	0.065	0.109	0.154	0.218	0.109	-	0.125	0.154	0.154	-	0.218	0.218	-	-	-	0.344	0.436
2.50	0.083	0.120	0.203	0.276	0.120	-	0.188	0.203	0.203	-	0.276	0.276	-	-	-	0.375	0.552
3.00	0.083	0.120	0.216	0.300	0.120	-	0.188	0.216	0.216	-	0.300	0.300	-	-	-	0.438	0.600
4.00	0.083	0.120	0.237	0.337	0.120	-	0.188	0.237	0.237	-	0.337	0.337	-	0.438	-	0.531	0.674
6.00	0.109	0.134	0.280	0.432	0.134	-	-	0.280	0.280	-	0.432	0.432	-	0.562	-	0.719	0.864
8.00	0.109	0.148	0.322	0.500	0.148	0.250	0.277	0.322	0.322	0.406	0.500	0.500	0.594	0.719	0.812	0.906	0.875
10.00	0.134	0.165	0.365	0.500	0.165	0.250	0.307	0.365	0.365	0.500	0.500	0.594	0.718	0.844	1.000	1.125	1.000
12.00	0.156	0.180	0.375	0.500	0.180	0.250	0.330	0.375	0.406	0.562	0.500	0.688	0.844	1.000	1.125	1.312	1.000
14.00	0.156	0.188	0.375	0.500	0.250	0.312	0.375	0.375	0.438	0.594	0.500	0.750	0.938	1.094	1.250	1.406	-
16.00	0.165	0.165	0.375	0.500	0.250	0.312	0.375	0.375	0.500	0.656	0.500	0.844	1.031	1.219	1.438	1.594	-
18.00	0.165	0.188	0.375	0.500	0.250	0.312	0.438	0.375	0.562	0.750	0.500	0.938	1.156	1.375	1.562	1.781	-
20.00	0.165	0.218	0.375	0.500	0.250	0.375	0.500	0.375	0.594	0.812	0.500	1.031	1.281	1.500	1.750	1.969	-
24.00	0.218	0.250	0.375	0.500	0.250	0.375	0.562	0.375	0.688	0.969	0.500	1.218	1.531	1.812	2.062	2.344	-
26.00	-	-	-	-	0.312	0.500	-	0.375	-	-	0.500	-	-	-	-	-	-
28.00	-	-	-	-	0.312	0.500	0.625	0.375	-	-	0.500	-	-	-	-	-	-
30.00	-	-	-	-	0.312	0.500	0.625	0.375	-	-	0.500	-	-	-	-	-	-
32.00	-	-	-	-	0.312	0.500	0.625	0.375	0.688	-	0.500	-	-	-	-	-	-
34.00	-	-	-	-	0.312	0.500	0.625	0.375	0.688	-	0.500	-	-	-	-	-	-
36.00	-	-	-	-	0.312	0.500	0.625	0.375	0.750	-	0.500	-	-	-	-	-	-
38.00	-	-	-	-	-	-	-	0.375	-	-	0.500	-	-	-	-	-	-
40.00	-	-	-	-	-	-	-	0.375	-	-	0.500	-	-	-	-	-	-
42.00	-	-	-	-	-	-	-	0.375	-	-	0.500	-	-	-	-	-	-
44.00	-	-	-	-	-	-	-	0.375	-	-	0.500	-	-	-	-	-	-
46.00	-	-	-	-	-	-	-	0.375	-	-	0.500	-	-	-	-	-	-
48.00	-	-	-	-	-	-	-	0.375	-	-	0.500	-	-	-	-	-	-

NOMINAL OUTSIDE DIAMETER (IN.) (Threaded Ends per ASME B1.20.1)	OUTSIDE DIAMETER (IN.)	t (IN.) = P·D / (2(SE·W + P·Y))	D/6	t_m = t + C.A. + Thread Depth / (1-Mill Tolerance)
0.50	0.840	0.0037	0.14	0.1415
0.75	1.050	0.0046	0.18	0.1426
1.00	1.315	0.0058	0.22	0.1561
1.50	1.900	0.0084	0.32	0.1612
2.00	2.375	0.0104	0.40	0.1634
2.50	2.875	0.0128	0.48	0.2067
3.00	3.500	0.0154	0.58	0.2038
4.00	4.500	0.0198	0.75	0.2089
6.00	6.625	0.0291	1.10	0.2196

PIPE SCHEDULES & CORRESPONDING NOMINAL WALL THICKNESSES (IN), PER ASME B36.10M AND ASME B36.19M
(Schedules highlighted in grey are not permitted for threaded pipe per ASME B31.3 Table 314.2.1)

	5S	10S	40S	80S	10	20	30	STD	40	60	XS	80	100	120	140	160	XXS
0.50	-	-	0.109	0.147	-	-	-	-	-	-	0.147	0.147	-	-	-	0.188	0.294
0.75	-	-	0.113	0.154	-	-	-	-	-	-	0.154	0.154	-	-	-	0.219	0.308
1.00	-	-	0.133	0.179	-	-	-	-	-	-	0.179	0.179	-	-	-	0.250	0.358
1.50	-	-	0.145	0.200	-	-	-	-	-	-	0.200	0.200	-	-	-	0.281	0.400
2.00	-	-	0.154	0.218	-	-	-	0.154	0.154	-	0.218	0.218	-	-	-	0.344	0.436
2.50	-	-	0.203	0.276	-	-	-	0.203	0.203	-	0.276	0.276	-	-	-	0.375	0.552
3.00	-	-	0.216	0.300	-	-	-	0.216	0.216	-	0.300	0.300	-	-	-	0.438	0.600
4.00	-	-	0.237	0.337	-	-	-	0.237	0.237	-	0.337	0.337	-	0.438	-	0.531	0.674
6.00	-	-	0.280	0.432	-	-	-	0.280	0.280	-	0.432	0.432	-	0.562	-	0.719	0.864

ATTACHMENT 8.4 – EXCEL SPREADSHEET (VERSION 1.5); "MINIMUM REQUIRED WALL THICKNESS OF STRAIGHT PIPE UNDER INTERNAL PRESSURE, PER ASME B31.3" – PIPE LINE CLASS P6

Minimum Required Wall Thickness of Straight Pipe Under Internal Pressure, Per ASME B31.3
Version 1.5 (5/15/2016)

CALCULATION FILE	-
PROJECT NUMBER	31269
DATE	9/28/2016
MATERIAL SPEC	P6
MATERIAL TYPE	SMLS / ERW 100% X-RAY
MATERIAL DESIGNATION	A312 TP 304/304L
P: INTERNAL DESIGN GAUGE PRESSURE (PSIG)	275
DESIGN TEMP. (DEG. F)	100
S: ALLOWABLE STRESS (PSI)	20000
E: QUALITY FACTOR	1.00
W: WELD JOINT STRENGTH REDUCTION FACTOR	1.00
C.A. (CORROSION ALLOWANCE)	0.013
Y COEFFICIENT	0.4
WALL TOLERANCE (%)	0.125

P SE = 6.014

Notes:
1. Mill tolerance applies to all nominal pipe sizes listed below.
2. For t ≤ D/6, the internal pressure design thickness for straight pipe shall be not less than that calculated below.
3. For t ≥ D/6 or for P/SE > 0.385, calculation of pressure design thickness for straight pipe required special consideration of factors such as theory of failure, effects of fatigue, and thermal stress.
4. t_m = minimum required thickness, including mechanical, corrosion and erosion allowances.
5. Codes and standards are the most recent at the time of Version.

Preparer: Jones, Grace — Date: Digitally signed by Jones, Grace DN: cn=Jones, Grace, ou=USDEN4 Date: 2016.09.26 17:17:25 -06'00'

Checker: Jason C. Jackson — Date: Digitally signed by Jason C. Jackson DN: cn=Jason C. Jackson, o=AECOM, ou=Piping, email=jason.jackson@aecom.com, c=US Date: 2017.05.10 14:36:40 -06'00'

NOMINAL OUTSIDE DIAMETER (IN.) (Welded Ends)	OUTSIDE DIAMETER (IN.)	t (PD) / 2(SEW + Py)	D/6	t_m = t + C.A. / (1-Mill Tolerance)
0.50	0.840	0.0057	0.14	0.0766
0.75	1.050	0.0072	0.18	0.0952
1.00	1.315	0.0090	0.22	0.0523
1.50	1.900	0.0130	0.32	0.0960
2.00	2.375	0.0162	0.40	0.0908
2.50	2.875	0.0197	0.48	0.0945
3.00	3.500	0.0238	0.58	0.0992
4.00	4.500	0.0306	0.75	0.1072
6.00	6.625	0.0453	1.10	0.1208
8.00	8.625	0.0590	1.44	0.1394
10.00	10.750	0.0735	1.79	0.1560
12.00	12.750	0.0872	2.13	0.1716
14.00	14.000	0.0957	2.33	0.1814
16.00	16.000	0.1094	2.67	0.1970
18.00	18.000	0.1231	3.00	0.2127
20.00	20.000	0.1367	3.33	0.2283
24.00	24.000	0.1641	4.00	0.2595
26.00	26.000	0.1778	4.33	0.2752
28.00	28.000	0.1914	4.67	0.2908
30.00	30.000	0.2051	5.00	0.3064
32.00	32.000	0.2188	5.33	0.3221
34.00	34.000	0.2325	5.67	0.3377
36.00	36.000	0.2461	6.00	0.3533
38.00	38.000	0.2598	6.33	0.3689
40.00	40.000	0.2735	6.67	0.3846
42.00	42.000	0.2872	7.00	0.4002
44.00	44.000	0.3008	7.33	0.4158
46.00	46.000	0.3145	7.67	0.4315
48.00	48.000	0.3282	8.00	0.4471

PIPE SCHEDULES & CORRESPONDING NOMINAL WALL THICKNESSES (IN) PER ASME B36.10M AND ASME B36.19M

5S	10S	40S	80S	10	20	30	STD	40	60	XS	80	100	120	140	160	XXS
0.065	0.083	0.109	0.147	0.083	-	0.095	0.109	0.126	-	0.147	0.147	-	-	-	0.188	0.294
0.065	0.083	0.113	0.154	0.083	-	0.095	0.113	0.113	-	0.154	0.154	-	-	-	0.219	0.308
0.065	0.109	0.133	0.179	0.109	-	0.114	0.133	0.133	-	0.179	0.179	-	-	-	0.250	0.358
0.065	0.109	0.145	0.200	0.109	-	0.125	0.145	0.145	-	0.200	0.200	-	-	-	0.281	0.400
0.065	0.109	0.154	0.218	0.109	-	0.125	0.154	0.154	-	0.218	0.218	-	-	-	0.344	0.436
0.083	0.120	0.203	0.276	0.120	-	0.165	0.203	0.203	-	0.276	0.276	-	-	-	0.375	0.552
0.083	0.120	0.216	0.300	0.120	-	0.188	0.216	0.216	-	0.300	0.300	-	-	-	0.438	0.600
0.083	0.120	0.237	0.337	0.120	-	0.188	0.237	0.237	-	0.337	0.337	-	0.438	-	0.531	0.674
0.109	0.134	0.250	0.432	0.134	-	-	0.250	0.250	-	0.432	0.432	-	0.562	-	0.719	0.864
0.109	0.145	0.322	0.500	0.145	0.250	0.277	0.322	0.322	0.406	0.500	0.500	0.594	0.719	0.812	0.906	0.875
0.134	0.165	0.365	0.500	0.165	0.250	0.307	0.365	0.365	0.500	0.500	0.594	0.719	0.844	1.000	1.125	1.000
0.156	0.180	0.375	0.500	0.180	0.250	0.330	0.375	0.406	0.562	0.500	0.688	0.844	1.000	1.125	1.312	1.000
0.156	0.188	0.375	0.500	0.250	0.312	0.375	0.375	0.437	0.594	0.500	0.750	0.938	1.094	1.250	1.406	-
0.165	0.188	0.375	0.500	0.250	0.312	0.375	0.375	0.500	0.656	0.500	0.844	1.031	1.219	1.438	1.594	-
0.165	0.188	0.375	0.500	0.250	0.312	0.438	0.375	0.562	0.750	0.500	0.938	1.156	1.375	1.562	1.781	-
0.165	0.218	0.375	0.500	0.250	0.375	0.500	0.375	0.594	0.812	0.500	1.031	1.281	1.500	1.750	1.969	-
0.218	0.250	0.375	0.500	0.250	0.375	0.562	0.375	0.688	0.969	0.500	1.219	1.531	1.812	2.062	2.344	-
-	-	-	-	0.312	0.500	-	0.375	-	-	0.500	-	-	-	-	-	-
-	-	-	-	0.312	0.500	0.625	0.375	-	-	0.500	-	-	-	-	-	-
-	-	-	-	0.312	0.500	0.625	0.375	-	-	0.500	-	-	-	-	-	-
-	-	-	-	0.312	0.500	0.625	0.375	0.800	-	0.500	-	-	-	-	-	-
-	-	-	-	0.312	0.500	0.625	0.375	0.906	-	0.500	-	-	-	-	-	-
-	-	-	-	0.312	0.500	0.625	0.375	0.750	-	0.500	-	-	-	-	-	-
-	-	-	-	-	-	-	0.375	-	-	0.500	-	-	-	-	-	-
-	-	-	-	-	-	-	0.375	-	-	0.500	-	-	-	-	-	-
-	-	-	-	-	-	-	0.375	-	-	0.500	-	-	-	-	-	-
-	-	-	-	-	-	-	0.375	-	-	0.500	-	-	-	-	-	-
-	-	-	-	-	-	-	0.375	-	-	0.500	-	-	-	-	-	-
-	-	-	-	-	-	-	0.375	-	-	0.500	-	-	-	-	-	-

NOMINAL OUTSIDE DIAMETER (IN.) (Threaded Ends per ASME B1.20.1)	OUTSIDE DIAMETER (IN.)	t (PD) / 2(SEW + Py)	D/6	t_m = t + C.A. + Thread Depth / (1-Mill Tolerance)
0.50	0.840	0.0057	0.14	0.1439
0.75	1.050	0.0072	0.18	0.1455
1.00	1.315	0.0090	0.22	0.1613
1.50	1.900	0.0130	0.32	0.1964
2.00	2.375	0.0162	0.40	0.1761
2.50	2.875	0.0197	0.48	0.2003
3.00	3.500	0.0238	0.58	0.2136
4.00	4.500	0.0306	0.75	0.2214
6.00	6.625	0.0453	1.10	0.2391

PIPE SCHEDULES & CORRESPONDING NOMINAL WALL THICKNESSES (IN) PER ASME B36.10M AND ASME B36.19M
(Schedules highlighted in grey are not permitted for threaded pipe per ASME B31.3 Table 314.2.1)

5S	10S	40S	80S	10	20	30	STD	40	60	XS	80	100	120	140	160	XXS
-	-	0.109	0.147	-	-	-	-	-	-	0.147	0.147	-	-	-	0.188	0.294
-	-	0.113	0.154	-	-	-	-	-	-	0.154	0.154	-	-	-	0.219	0.308
-	-	0.133	0.179	-	-	-	-	-	-	0.179	0.179	-	-	-	0.250	0.358
-	-	0.145	0.200	-	-	-	-	[illegible]	-	0.200	0.200	-	-	-	0.281	0.400
-	-	0.154	0.218	-	-	-	0.154	0.154	-	0.218	0.218	-	-	-	0.344	0.436
-	-	0.203	0.276	-	-	-	0.203	0.203	-	0.276	0.276	-	-	-	0.375	0.552
-	-	0.216	0.300	-	-	-	0.216	0.216	-	0.300	0.300	-	-	-	0.438	0.600
-	-	0.237	0.337	-	-	-	0.237	0.237	-	0.337	0.337	-	0.438	-	0.531	0.674
-	-	0.250	0.432	-	-	-	0.250	0.250	-	0.432	0.432	-	0.562	-	0.719	0.594

ATTACHMENT 8.5 – MANUAL MINIMUM WALL THICKNESS CALCULATION PER ASME B13.3 – PIPE LINE CLASS P6

PIPE WALL THICKNESS CALCULATION PER ASME B31.3 "STRAIGHT PIPE UNDER INTERNAL PRESSURE"

CODE	ASME B31.3	OTHER	-	CALC. NO.	-
MATERIAL	Stainless Steel	ASTM	A312	PREPARED BY:	Bailey, Rachel — Digitally signed by Bailey Rachel DN: cn=Bailey, Rachel ou=Users Date: 2017.04.17 09:13:26 -05'00'
GRADE	304/304L	CLASS	-		
SEAMLESS	-	WELDED (W)	1.00		
PRESSURE (P)	275	TEMP.	-20	CHECKED BY:	Jason C. Jackson — Digitally signed by Jason C. Jackson DN: cn=Jason C. Jackson, o=AECOM, ou=Piping, email=jason.jackson@aecom.com, c=US Date: 2017.05.10 14:37:14 -06'00'
STRESS (S)	20000	FACTOR (γ)	0.4		
BASED ON	1.00 LONG, JT. FACTOR (E)				
CORROSION ALLOWANCE (C)	0.0630	MILL TOLERANCE (M) %	0.125		

$t_m = \frac{P}{2(SEW+P\gamma)} \times D + C / (1-M)$				$k = \frac{P}{2(SEW+P\gamma)} = \frac{275}{40220} = 0.006837$							NOMINAL SIZE
	k	x	D	=	+	C	=	/	(1-M)	t_m	
	0.006837	x	1.660	= 0.0114	+	0.063	=	0.0744	/ 0.875	= 0.0850	1 1/4
										T= 0.140	SCH: 40S

t_m = MINIMUM REQUIRED THICKNESS

D = OUTSIDE DIAMETER IN INCHES

T = SELECTED WALL THICKNESS

k = CALCULATED CONSTANT

M = MILL TOLERANCE = (PER ASTM SPEC)

ATTACHMENT 8.6 – EXCEL SPREADSHEET (VERSION 1.5); "MINIMUM REQUIRED WALL THICKNESS OF STRAIGHT PIPE UNDER INTERNAL PRESSURE, PER ASME B31.3" – PIPE LINE CLASS P8

Minimum Required Wall Thickness of Straight Pipe Under Internal Pressure, Per ASME B31.3
Version 1.3 (9/15/2016)

CALCULATION FILE	-
PROJECT NUMBER	31269
DATE	9/29/2016
MATERIAL SPEC	P8
MATERIAL TYPE	SMLS
MATERIAL DESIGNATION	A106 GR. B
P: INTERNAL DESIGN GAUGE PRESSURE (PSIG)	50
DESIGN TEMP (DEG F)	100
S: ALLOWABLE STRESS (PSI)	20000
E: QUALITY FACTOR	1.00
W: WELD JOINT STRENGTH REDUCTION FACTOR	1.00
C.A.: CORROSION ALLOWANCE	0.063
Y COEFFICIENT	0.4
MILL TOLERANCE (%)	0.125

P/SE = 0.003

Notes:
1. Mill tolerance applies to all nominal pipe sizes listed below.
2. For t < D/6, the internal pressure design thickness for straight pipe shall be not less than that calculated below.
3. For t ≥ D/6 or for P/SE > 0.385, calculation of pressure design thickness for straight pipe required special consideration of factors such as theory of failure, effects of fatigue, and thermal stress.
4. t_m = minimum required thickness, including mechanical, corrosion and erosion allowances.
5. Codes and standards are the most recent at the time of Version.

Preparer: Jones, Grace — Digitally signed by Jones, Grace DN: cn=Jones, Grace, ou=USDEN4 Date: 2016.09.26 17:20:26 -06'00'

Checker: Jason C. Jackson — Date: Digitally signed by Jason C. Jackson DN: cn=Jason C. Jackson, o=AECOM, ou=Piping, email=jason.jackson@aecom.com, c=US Date: 2017.05.10 14:37:36 -05'00'

NOMINAL OUTSIDE DIAMETER (IN.) (Welded Ends)	OUTSIDE DIAMETER (IN)	t (PD) / (2(SEW + PY))	D/6	t_m = t + C.A. / (1-Mill Tolerance)
0.50	0.840	0.0010	0.14	0.0732
0.75	1.050	0.0013	0.18	0.0735
1.00	1.315	0.0018	0.22	0.0739
1.50	1.900	0.0034	0.32	0.0747
2.00	2.375	0.0030	0.40	0.0754
2.50	2.875	0.0036	0.48	0.0761
3.00	3.500	0.0044	0.58	0.0770
4.00	4.500	0.0056	0.75	0.0784
6.00	6.625	0.0083	1.10	0.0813
8.00	8.625	0.0108	1.44	0.0843
10.00	10.750	0.0134	1.79	0.0879
12.00	12.750	0.0159	2.13	0.0912
14.00	14.000	0.0175	2.33	0.0930
16.00	16.000	0.0200	2.67	0.0963
18.00	18.000	0.0225	3.00	0.0997
20.00	20.000	0.0250	3.33	0.1030
24.00	24.000	0.0300	4.00	0.1063
26.00	26.000	0.0325	4.33	0.1081
28.00	28.000	0.0350	4.67	0.1123
30.00	30.000	0.0375	5.00	0.1149
32.00	32.000	0.0400	5.33	0.1177
34.00	34.000	0.0425	5.67	0.1205
36.00	36.000	0.0450	6.00	0.1234
38.00	38.000	0.0475	6.33	0.1262
40.00	40.000	0.0500	6.67	0.1291
42.00	42.000	0.0524	7.00	0.1319
44.00	44.000	0.0549	7.33	0.1349
46.00	46.000	0.0574	7.67	0.1378
48.00	48.000	0.0598	8.00	0.1405

PIPE SCHEDULES & CORRESPONDING NOMINAL WALL THICKNESSES (IN) PER ASME B36.10M AND ASME B36.19M

5S	10S	40S	80S	10	20	30	STD	40	60	XS	80	100	120	140	160	XXS
0.065	0.083	0.109	0.147	0.083	-	0.095	0.109	0.109	-	0.147	0.147	-	-	-	0.188	0.294
0.065	0.083	0.113	0.154	0.083	-	0.095	0.113	0.113	-	0.154	0.154	-	-	-	0.219	0.308
0.065	0.109	0.133	0.179	0.109	-	0.114	0.133	0.133	-	0.179	0.179	-	-	-	0.250	0.358
0.065	0.109	0.145	0.200	0.109	-	0.125	0.145	0.145	-	0.200	0.200	-	-	-	0.281	0.400
0.083	0.109	0.154	0.218	0.109	-	0.125	0.154	0.154	-	0.218	0.218	-	-	-	0.344	0.436
0.083	0.120	0.203	0.276	0.120	-	0.188	0.203	0.203	-	0.276	0.276	-	-	-	0.375	0.552
0.083	0.120	0.216	0.300	0.120	-	0.188	0.216	0.216	-	0.300	0.300	-	-	-	0.438	0.600
0.083	0.120	0.237	0.337	0.120	-	0.188	0.237	0.237	-	0.337	0.337	-	0.438	-	0.531	0.674
0.109	0.134	0.258	0.432	0.134	-	-	0.258	0.258	-	0.432	0.432	-	0.562	-	0.719	0.864
0.108	0.148	0.322	0.500	0.148	0.250	0.277	0.322	0.322	0.406	0.500	0.500	0.594	0.719	0.812	0.906	0.875
0.134	0.165	0.365	0.500	0.165	0.250	0.307	0.365	0.365	0.500	0.500	0.594	0.719	0.844	1.000	1.125	1.000
0.156	0.180	0.375	0.500	0.180	0.250	0.330	0.375	0.406	0.562	0.500	0.688	0.844	1.000	1.125	1.312	1.000
0.156	0.188	0.375	0.500	0.250	0.312	0.375	0.375	0.438	0.594	0.500	0.750	0.938	1.094	1.250	1.406	-
0.165	0.188	0.375	0.500	0.250	0.312	0.375	0.375	0.500	0.656	0.500	0.844	1.031	1.219	1.438	1.594	-
0.165	0.188	0.375	0.500	0.250	0.312	0.438	0.375	0.562	0.750	0.500	0.938	1.156	1.375	1.562	1.781	-
0.165	0.218	0.375	0.500	0.250	0.375	0.500	0.375	0.594	0.812	0.500	1.031	1.281	1.500	1.750	1.969	-
0.218	0.250	0.375	0.500	0.250	0.375	0.562	0.375	0.688	0.969	0.500	1.219	1.531	1.812	2.062	2.344	-
-	-	-	-	0.312	0.500	-	0.375			0.500	-	-	-	-	-	-
-	-	-	-	0.312	0.500	0.625	0.375	-	-	0.500	-	-	-	-	-	-
-	-	-	-	0.312	0.500	0.625	0.375	-	-	0.500	-	-	-	-	-	-
-	-	-	-	0.312	0.500	0.625	0.375	0.625	-	0.500	-	-	-	-	-	-
-	-	-	-	0.312	0.500	0.625	0.375	0.656	-	0.500	-	-	-	-	-	-
-	-	-	-	0.312	0.500	0.625	0.375	0.750	-	0.500	-	-	-	-	-	-
-	-	-	-	-	-	-	0.375	-	-	0.500	-	-	-	-	-	-
-	-	-	-	-	-	-	0.375	-	-	0.500	-	-	-	-	-	-
-	-	-	-	-	-	-	0.375	-	-	0.500	-	-	-	-	-	-
-	-	-	-	-	-	-	0.375	-	-	0.500	-	-	-	-	-	-
-	-	-	-	-	-	-	0.375		-	0.500	-	-	-	-	-	-

NOMINAL OUTSIDE DIAMETER (IN.) (Threaded Ends per ASME B1.20.1)	OUTSIDE DIAMETER (IN)	t (PD) / (2(SEW + PY))	D/6	t_m = t + C.A. + "Thread Depth" / (1-Mill Tolerance)
0.50	0.840	0.0010	0.14	0.1365
0.75	1.050	0.0013	0.18	0.1368
1.00	1.315	0.0018	0.22	0.1334
1.50	1.900	0.0024	0.32	0.1342
2.00	2.375	0.0030	0.40	0.1349
2.50	2.875	0.0036	0.48	0.1354
3.00	3.500	0.0044	0.58	0.1313
4.00	4.500	0.0056	0.75	0.1327
6.00	6.625	0.0083	1.10	0.1357

PIPE SCHEDULES & CORRESPONDING NOMINAL WALL THICKNESSES (IN) PER ASME B36.10M AND ASME B36.19M
(Schedules highlighted in grey are not permitted for threaded pipe per ASME B31.3 Table 314.2.1)

5S	10S	40S	80S	10	20	30	STD	40	60	XS	80	100	120	140	160	XXS
-	-	0.109	0.147	-	-	-	-	-	-	0.147	0.147	-	-	-	0.188	0.294
-	-	0.113	0.154	-	-	-	-	-	-	0.154	0.154	-	-	-	0.219	0.308
-	-	0.133	0.179	-	-	-	-	-	-	0.179	0.179	-	-	-	0.250	0.358
-	-	0.145	0.200	-	-	-	-	-	-	0.200	0.200	-	-	-	0.281	0.400
-	-	0.154	0.218	-	-	-	0.154	0.154	-	0.218	0.218	-	-	-	0.344	0.436
-	-	0.203	0.276	-	-	-	0.203	0.203	-	0.276	0.276	-	-	-	0.375	0.552
-	-	0.216	0.300	-	-	-	0.216	0.216	-	0.300	0.300	-	-	-	0.438	0.600
-	-	0.237	0.337	-	-	-	0.237	0.237	-	0.337	0.337	-	0.438	-	0.531	0.674
-	-	0.258	0.432	-	-	-	0.258	0.280	-	0.432	0.432	-	0.562	-	0.719	0.864

ATTACHMENT 8.7 – MACRO AND FORMULA PRINT OUT OF EXCEL SPREADSHEET VERSION (1.0); "WALL THICKNESS PRIOR TO BENDING, PER ASME B31.3 (2012) AND PFI ES-24 (2013) SECTION 7"

Wall Thickness Prior to Bending, Per ASME B31.3 (2012) Para. 304.2.1 and PFI ES-24 (1998) Section 7

CALCULATION FILE:
PROJECT NUMBER:
DATE:

MATERIAL SPEC
MATERIAL TYPE:
MATERIAL DESIGNATION:
DESIGN PRESSURE (P:SIG):
DESIGN TEMP. (DEG. F):
S:ALLOWABLE STRESS (P:S):
E (QUALITY FACTOR)
W (WELD JOINT STRENGTH)
CORROSION ALLOWANCE:
Y COEFFICIENT:
MILL TOLERANCE (%):
RADIUS OF BEND: (D):

Notes/Assumptions:
1. Worst case fabrication methods per radius of bend from PFI ES-24 (1998) Section 7 were used to calculate minimum wall thickness prior to bending.
2. Standard bend radiuses per PFI ES-24 only. No interpolation available.
3. Mill tolerance applies to all sizes listed below.

NOMINAL DIAMETER	ACTUAL DIAMETER	INTRADOS OF BEND	EXTRADOS OF BEND	CENTERLINE OF BEND	MIN. WT @ INTRADOS	MIN WT @ EXTRADOS
0.5	0.84	=(((4*($B$18*B22/B22)-1))/((4*$B$18*B22/B22)-2))	=(((4*$B$18*B22/B22)+1)/((4*$B$18*B22/B22)+2))	1	=(((($B$10*B22)/2*(((($B$12*$B$13*$B$14)/(C22)+($B$10*$B$16)))+$B$15)/((100-$B$17)/100)))	=(((($B$10*B22)/2*(((($B$12*$B$13*$B$14)/(D22)+($B$10*$B$16)))+$B$15)/((100-$B$17)/100)))
0.75	1.05	=(((4*($B$18*B23/B23)-1))/((4*$B$18*B23/B23)-2))	=(((4*$B$18*B23/B23)+1)/((4*$B$18*B23/B23)+2))	1	=(((($B$10*B23)/2*(((($B$12*$B$13*$B$14)/(C23)+($B$10*$B$16)))+$B$15)/((100-$B$17)/100)))	=(((($B$10*B23)/2*(((($B$12*$B$13*$B$14)/(D23)+($B$10*$B$16)))+$B$15)/((100-$B$17)/100)))
1	1.315	=(((4*($B$18*B24/B24)-1))/((4*$B$18*B24/B24)-2))	=(((4*$B$18*B24/B24)+1)/((4*$B$18*B24/B24)+2))	1	=(((($B$10*B24)/2*(((($B$12*$B$13*$B$14)/(C24)+($B$10*$B$16)))+$B$15)/((100-$B$17)/100)))	=(((($B$10*B24)/2*(((($B$12*$B$13*$B$14)/(D24)+($B$10*$B$16)))+$B$15)/((100-$B$17)/100)))
1.5	1.9	=(((4*($B$18*B25/B25)-1))/((4*$B$18*B25/B25)-2))	=(((4*$B$18*B25/B25)+1)/((4*$B$18*B25/B25)+2))	1	=(((($B$10*B25)/2*(((($B$12*$B$13*$B$14)/(C25)+($B$10*$B$16)))+$B$15)/((100-$B$17)/100)))	=(((($B$10*B25)/2*(((($B$12*$B$13*$B$14)/(D25)+($B$10*$B$16)))+$B$15)/((100-$B$17)/100)))
2	2.375	=(((4*($B$18*B26/B26)-1))/((4*$B$18*B26/B26)-2))	=(((4*$B$18*B26/B26)+1)/((4*$B$18*B26/B26)+2))	1	=(((($B$10*B26)/2*(((($B$12*$B$13*$B$14)/(C26)+($B$10*$B$16)))+$B$15)/((100-$B$17)/100)))	=(((($B$10*B26)/2*(((($B$12*$B$13*$B$14)/(D26)+($B$10*$B$16)))+$B$15)/((100-$B$17)/100)))
2.5	2.875	=(((4*($B$18*B27/B27)-1))/((4*$B$18*B27/B27)-2))	=(((4*$B$18*B27/B27)+1)/((4*$B$18*B27/B27)+2))	1	=(((($B$10*B27)/2*(((($B$12*$B$13*$B$14)/(C27)+($B$10*$B$16)))+$B$15)/((100-$B$17)/100)))	=(((($B$10*B27)/2*(((($B$12*$B$13*$B$14)/(D27)+($B$10*$B$16)))+$B$15)/((100-$B$17)/100)))
3	3.5	=(((4*($B$18*B28/B28)-1))/((4*$B$18*B28/B28)-2))	=(((4*$B$18*B28/B28)+1)/((4*$B$18*B28/B28)+2))	1	=(((($B$10*B28)/2*(((($B$12*$B$13*$B$14)/(C28)+($B$10*$B$16)))+$B$15)/((100-$B$17)/100)))	=(((($B$10*B28)/2*(((($B$12*$B$13*$B$14)/(D28)+($B$10*$B$16)))+$B$15)/((100-$B$17)/100)))
4	4.5	=(((4*($B$18*B29/B29)-1))/((4*$B$18*B29/B29)-2))	=(((4*$B$18*B29/B29)+1)/((4*$B$18*B29/B29)+2))	1	=(((($B$10*B29)/2*(((($B$12*$B$13*$B$14)/(C29)+($B$10*$B$16)))+$B$15)/((100-$B$17)/100)))	=(((($B$10*B29)/2*(((($B$12*$B$13*$B$14)/(D29)+($B$10*$B$16)))+$B$15)/((100-$B$17)/100)))
6	6.625	=(((4*($B$18*B30/B30)-1))/((4*$B$18*B30/B30)-2))	=(((4*$B$18*B30/B30)+1)/((4*$B$18*B30/B30)+2))	1	=(((($B$10*B30)/2*(((($B$12*$B$13*$B$14)/(C30)+($B$10*$B$16)))+$B$15)/((100-$B$17)/100)))	=(((($B$10*B30)/2*(((($B$12*$B$13*$B$14)/(D30)+($B$10*$B$16)))+$B$15)/((100-$B$17)/100)))
8	8.625	=(((4*($B$18*B31/B31)-1))/((4*$B$18*B31/B31)-2))	=(((4*$B$18*B31/B31)+1)/((4*$B$18*B31/B31)+2))	1	=(((($B$10*B31)/2*(((($B$12*$B$13*$B$14)/(C31)+($B$10*$B$16)))+$B$15)/((100-$B$17)/100)))	=(((($B$10*B31)/2*(((($B$12*$B$13*$B$14)/(D31)+($B$10*$B$16)))+$B$15)/((100-$B$17)/100)))
10	10.75	=(((4*($B$18*B32/B32)-1))/((4*$B$18*B32/B32)-2))	=(((4*$B$18*B32/B32)+1)/((4*$B$18*B32/B32)+2))	1	=(((($B$10*B32)/2*(((($B$12*$B$13*$B$14)/(C32)+($B$10*$B$16)))+$B$15)/((100-$B$17)/100)))	=(((($B$10*B32)/2*(((($B$12*$B$13*$B$14)/(D32)+($B$10*$B$16)))+$B$15)/((100-$B$17)/100)))
12	12.75	=(((4*($B$18*B33/B33)-1))/((4*$B$18*B33/B33)-2))	=(((4*$B$18*B33/B33)+1)/((4*$B$18*B33/B33)+2))	1	=(((($B$10*B33)/2*(((($B$12*$B$13*$B$14)/(C33)+($B$10*$B$16)))+$B$15)/((100-$B$17)/100)))	=(((($B$10*B33)/2*(((($B$12*$B$13*$B$14)/(D33)+($B$10*$B$16)))+$B$15)/((100-$B$17)/100)))
14	14	=(((4*($B$18*B34/B34)-1))/((4*$B$18*B34/B34)-2))	=(((4*$B$18*B34/B34)+1)/((4*$B$18*B34/B34)+2))	1	=(((($B$10*B34)/2*(((($B$12*$B$13*$B$14)/(C34)+($B$10*$B$16)))+$B$15)/((100-$B$17)/100)))	=(((($B$10*B34)/2*(((($B$12*$B$13*$B$14)/(D34)+($B$10*$B$16)))+$B$15)/((100-$B$17)/100)))
16	16	=(((4*($B$18*B35/B35)-1))/((4*$B$18*B35/B35)-2))	=(((4*$B$18*B35/B35)+1)/((4*$B$18*B35/B35)+2))	1	=(((($B$10*B35)/2*(((($B$12*$B$13*$B$14)/(C35)+($B$10*$B$16)))+$B$15)/((100-$B$17)/100)))	=(((($B$10*B35)/2*(((($B$12*$B$13*$B$14)/(D35)+($B$10*$B$16)))+$B$15)/((100-$B$17)/100)))
18	18	=(((4*($B$18*B36/B36)-1))/((4*$B$18*B36/B36)-2))	=(((4*$B$18*B36/B36)+1)/((4*$B$18*B36/B36)+2))	1	=(((($B$10*B36)/2*(((($B$12*$B$13*$B$14)/(C36)+($B$10*$B$16)))+$B$15)/((100-$B$17)/100)))	=(((($B$10*B36)/2*(((($B$12*$B$13*$B$14)/(D36)+($B$10*$B$16)))+$B$15)/((100-$B$17)/100)))
20	20	=(((4*($B$18*B37/B37)-1))/((4*$B$18*B37/B37)-2))	=(((4*$B$18*B37/B37)+1)/((4*$B$18*B37/B37)+2))	1	=(((($B$10*B37)/2*(((($B$12*$B$13*$B$14)/(C37)+($B$10*$B$16)))+$B$15)/((100-$B$17)/100)))	=(((($B$10*B37)/2*(((($B$12*$B$13*$B$14)/(D37)+($B$10*$B$16)))+$B$15)/((100-$B$17)/100)))
24	24	=(((4*($B$18*B38/B38)-1))/((4*$B$18*B38/B38)-2))	=(((4*$B$18*B38/B38)+1)/((4*$B$18*B38/B38)+2))	1	=(((($B$10*B38)/2*(((($B$12*$B$13*$B$14)/(C38)+($B$10*$B$16)))+$B$15)/((100-$B$17)/100)))	=(((($B$10*B38)/2*(((($B$12*$B$13*$B$14)/(D38)+($B$10*$B$16)))+$B$15)/((100-$B$17)/100)))
26	26	=(((4*($B$18*B39/B39)-1))/((4*$B$18*B39/B39)-2))	=(((4*$B$18*B39/B39)+1)/((4*$B$18*B39/B39)+2))	1	=(((($B$10*B39)/2*(((($B$12*$B$13*$B$14)/(C39)+($B$10*$B$16)))+$B$15)/((100-$B$17)/100)))	=(((($B$10*B39)/2*(((($B$12*$B$13*$B$14)/(D39)+($B$10*$B$16)))+$B$15)/((100-$B$17)/100)))
28	28	=(((4*($B$18*B40/B40)-1))/((4*$B$18*B40/B40)-2))	=(((4*$B$18*B40/B40)+1)/((4*$B$18*B40/B40)+2))	1	=(((($B$10*B40)/2*(((($B$12*$B$13*$B$14)/(C40)+($B$10*$B$16)))+$B$15)/((100-$B$17)/100)))	=(((($B$10*B40)/2*(((($B$12*$B$13*$B$14)/(D40)+($B$10*$B$16)))+$B$15)/((100-$B$17)/100)))
30	30	=(((4*($B$18*B41/B41)-1))/((4*$B$18*B41/B41)-2))	=(((4*$B$18*B41/B41)+1)/((4*$B$18*B41/B41)+2))	1	=(((($B$10*B41)/2*(((($B$12*$B$13*$B$14)/(C41)+($B$10*$B$16)))+$B$15)/((100-$B$17)/100)))	=(((($B$10*B41)/2*(((($B$12*$B$13*$B$14)/(D41)+($B$10*$B$16)))+$B$15)/((100-$B$17)/100)))
32	32	=(((4*($B$18*B42/B42)-1))/((4*$B$18*B42/B42)-2))	=(((4*$B$18*B42/B42)+1)/((4*$B$18*B42/B42)+2))	1	=(((($B$10*B42)/2*(((($B$12*$B$13*$B$14)/(C42)+($B$10*$B$16)))+$B$15)/((100-$B$17)/100)))	=(((($B$10*B42)/2*(((($B$12*$B$13*$B$14)/(D42)+($B$10*$B$16)))+$B$15)/((100-$B$17)/100)))
34	34	=(((4*($B$18*B43/B43)-1))/((4*$B$18*B43/B43)-2))	=(((4*$B$18*B43/B43)+1)/((4*$B$18*B43/B43)+2))	1	=(((($B$10*B43)/2*(((($B$12*$B$13*$B$14)/(C43)+($B$10*$B$16)))+$B$15)/((100-$B$17)/100)))	=(((($B$10*B43)/2*(((($B$12*$B$13*$B$14)/(D43)+($B$10*$B$16)))+$B$15)/((100-$B$17)/100)))
36	36	=(((4*($B$18*B44/B44)-1))/((4*$B$18*B44/B44)-2))	=(((4*$B$18*B44/B44)+1)/((4*$B$18*B44/B44)+2))	1	=(((($B$10*B44)/2*(((($B$12*$B$13*$B$14)/(C44)+($B$10*$B$16)))+$B$15)/((100-$B$17)/100)))	=(((($B$10*B44)/2*(((($B$12*$B$13*$B$14)/(D44)+($B$10*$B$16)))+$B$15)/((100-$B$17)/100)))
40	40	=(((4*($B$18*B45/B45)-1))/((4*$B$18*B45/B45)-2))	=(((4*$B$18*B45/B45)+1)/((4*$B$18*B45/B45)+2))	1	=(((($B$10*B45)/2*(((($B$12*$B$13*$B$14)/(C45)+($B$10*$B$16)))+$B$15)/((100-$B$17)/100)))	=(((($B$10*B45)/2*(((($B$12*$B$13*$B$14)/(D45)+($B$10*$B$16)))+$B$15)/((100-$B$17)/100)))
42	42	=(((4*($B$18*B46/B46)-1))/((4*$B$18*B46/B46)-2))	=(((4*$B$18*B46/B46)+1)/((4*$B$18*B46/B46)+2))	1	=(((($B$10*B46)/2*(((($B$12*$B$13*$B$14)/(C46)+($B$10*$B$16)))+$B$15)/((100-$B$17)/100)))	=(((($B$10*B46)/2*(((($B$12*$B$13*$B$14)/(D46)+($B$10*$B$16)))+$B$15)/((100-$B$17)/100)))
48	48	=(((4*($B$18*B47/B47)-1))/((4*$B$18*B47/B47)-2))	=(((4*$B$18*B47/B47)+1)/((4*$B$18*B47/B47)+2))	1	=(((($B$10*B47)/2*(((($B$12*$B$13*$B$14)/(C47)+($B$10*$B$16)))+$B$15)/((100-$B$17)/100)))	=(((($B$10*B47)/2*(((($B$12*$B$13*$B$14)/(D47)+($B$10*$B$16)))+$B$15)/((100-$B$17)/100)))

ATTACHMENT 8.7 – MACRO AND FORMULA PRINT OUT OF EXCEL SPREADSHEET VERSION (1.0); "WALL THICKNESS PRIOR TO BENDING, PER ASME B31.3 (2012) AND PFI ES-24 (2013) SECTION 7"

	H	I
21	MIN. WT @ CENTERLINE	MIN. WT PRIOR TO BENDING
22	=(((($B$10*B22)/(2*(($B$12*$B$13*$B$14)/E22)+($B$10*$B$16)))+$B$15)/((100-$B$17)*0.01))	=(MAX(F22:H22))*(VLOOKUP($B$18,'PFI ES-24 Tables'!$A$15:$B$20,2,FALSE))
23	=(((($B$10*B23)/(2*(($B$12*$B$13*$B$14)/E23)+($B$10*$B$16)))+$B$15)/((100-$B$17)*0.01))	=(MAX(F23:H23))*(VLOOKUP($B$18,'PFI ES-24 Tables'!$A$15:$B$20,2,FALSE))
24	=(((($B$10*B24)/(2*(($B$12*$B$13*$B$14)/E24)+($B$10*$B$16)))+$B$15)/((100-$B$17)*0.01))	=(MAX(F24:H24))*(VLOOKUP($B$18,'PFI ES-24 Tables'!$A$15:$B$20,2,FALSE))
25	=(((($B$10*B25)/(2*(($B$12*$B$13*$B$14)/E25)+($B$10*$B$16)))+$B$15)/((100-$B$17)*0.01))	=(MAX(F25:H25))*(VLOOKUP($B$18,'PFI ES-24 Tables'!$A$15:$B$20,2,FALSE))
26	=(((($B$10*B26)/(2*(($B$12*$B$13*$B$14)/E26)+($B$10*$B$16)))+$B$15)/((100-$B$17)*0.01))	=(MAX(F26:H26))*(VLOOKUP($B$18,'PFI ES-24 Tables'!$A$15:$B$20,2,FALSE))
27	=(((($B$10*B27)/(2*(($B$12*$B$13*$B$14)/E27)+($B$10*$B$16)))+$B$15)/((100-$B$17)*0.01))	=(MAX(F27:H27))*(VLOOKUP($B$18,'PFI ES-24 Tables'!$A$15:$B$20,2,FALSE))
28	=(((($B$10*B28)/(2*(($B$12*$B$13*$B$14)/E28)+($B$10*$B$16)))+$B$15)/((100-$B$17)*0.01))	=(MAX(F28:H28))*(VLOOKUP($B$18,'PFI ES-24 Tables'!$A$15:$B$20,2,FALSE))
29	=(((($B$10*B29)/(2*(($B$12*$B$13*$B$14)/E29)+($B$10*$B$16)))+$B$15)/((100-$B$17)*0.01))	=(MAX(F29:H29))*(VLOOKUP($B$18,'PFI ES-24 Tables'!$A$15:$B$20,2,FALSE))
30	=(((($B$10*B30)/(2*(($B$12*$B$13*$B$14)/E30)+($B$10*$B$16)))+$B$15)/((100-$B$17)*0.01))	=(MAX(F30:H30))*(VLOOKUP($B$18,'PFI ES-24 Tables'!$A$15:$B$20,2,FALSE))
31	=(((($B$10*B31)/(2*(($B$12*$B$13*$B$14)/E31)+($B$10*$B$16)))+$B$15)/((100-$B$17)*0.01))	=(MAX(F31:H31))*(VLOOKUP($B$18,'PFI ES-24 Tables'!$A$15:$B$20,2,FALSE))
32	=(((($B$10*B32)/(2*(($B$12*$B$13*$B$14)/E32)+($B$10*$B$16)))+$B$15)/((100-$B$17)*0.01))	=(MAX(F32:H32))*(VLOOKUP($B$18,'PFI ES-24 Tables'!$A$15:$B$20,2,FALSE))
33	=(((($B$10*B33)/(2*(($B$12*$B$13*$B$14)/E33)+($B$10*$B$16)))+$B$15)/((100-$B$17)*0.01))	=(MAX(F33:H33))*(VLOOKUP($B$18,'PFI ES-24 Tables'!$A$15:$B$20,2,FALSE))
34	=(((($B$10*B34)/(2*(($B$12*$B$13*$B$14)/E34)+($B$10*$B$16)))+$B$15)/((100-$B$17)*0.01))	=(MAX(F34:H34))*(VLOOKUP($B$18,'PFI ES-24 Tables'!$A$15:$B$20,2,FALSE))
35	=(((($B$10*B35)/(2*(($B$12*$B$13*$B$14)/E35)+($B$10*$B$16)))+$B$15)/((100-$B$17)*0.01))	=(MAX(F35:H35))*(VLOOKUP($B$18,'PFI ES-24 Tables'!$A$15:$B$20,2,FALSE))
36	=(((($B$10*B36)/(2*(($B$12*$B$13*$B$14)/E36)+($B$10*$B$16)))+$B$15)/((100-$B$17)*0.01))	=(MAX(F36:H36))*(VLOOKUP($B$18,'PFI ES-24 Tables'!$A$15:$B$20,2,FALSE))
37	=(((($B$10*B37)/(2*(($B$12*$B$13*$B$14)/E37)+($B$10*$B$16)))+$B$15)/((100-$B$17)*0.01))	=(MAX(F37:H37))*(VLOOKUP($B$18,'PFI ES-24 Tables'!$A$15:$B$20,2,FALSE))
38	=(((($B$10*B38)/(2*(($B$12*$B$13*$B$14)/E38)+($B$10*$B$16)))+$B$15)/((100-$B$17)*0.01))	=(MAX(F38:H38))*(VLOOKUP($B$18,'PFI ES-24 Tables'!$A$15:$B$20,2,FALSE))
39	=(((($B$10*B39)/(2*(($B$12*$B$13*$B$14)/E39)+($B$10*$B$16)))+$B$15)/((100-$B$17)*0.01))	=(MAX(F39:H39))*(VLOOKUP($B$18,'PFI ES-24 Tables'!$A$15:$B$20,2,FALSE))
40	=(((($B$10*B40)/(2*(($B$12*$B$13*$B$14)/E40)+($B$10*$B$16)))+$B$15)/((100-$B$17)*0.01))	=(MAX(F40:H40))*(VLOOKUP($B$18,'PFI ES-24 Tables'!$A$15:$B$20,2,FALSE))
41	=(((($B$10*B41)/(2*(($B$12*$B$13*$B$14)/E41)+($B$10*$B$16)))+$B$15)/((100-$B$17)*0.01))	=(MAX(F41:H41))*(VLOOKUP($B$18,'PFI ES-24 Tables'!$A$15:$B$20,2,FALSE))
42	=(((($B$10*B42)/(2*(($B$12*$B$13*$B$14)/E42)+($B$10*$B$16)))+$B$15)/((100-$B$17)*0.01))	=(MAX(F42:H42))*(VLOOKUP($B$18,'PFI ES-24 Tables'!$A$15:$B$20,2,FALSE))
43	=(((($B$10*B43)/(2*(($B$12*$B$13*$B$14)/E43)+($B$10*$B$16)))+$B$15)/((100-$B$17)*0.01))	=(MAX(F43:H43))*(VLOOKUP($B$18,'PFI ES-24 Tables'!$A$15:$B$20,2,FALSE))
44	=(((($B$10*B44)/(2*(($B$12*$B$13*$B$14)/E44)+($B$10*$B$16)))+$B$15)/((100-$B$17)*0.01))	=(MAX(F44:H44))*(VLOOKUP($B$18,'PFI ES-24 Tables'!$A$15:$B$20,2,FALSE))
45	=(((($B$10*B45)/(2*(($B$12*$B$13*$B$14)/E45)+($B$10*$B$16)))+$B$15)/((100-$B$17)*0.01))	=(MAX(F45:H45))*(VLOOKUP($B$18,'PFI ES-24 Tables'!$A$15:$B$20,2,FALSE))
46	=(((($B$10*B46)/(2*(($B$12*$B$13*$B$14)/E46)+($B$10*$B$16)))+$B$15)/((100-$B$17)*0.01))	=(MAX(F46:H46))*(VLOOKUP($B$18,'PFI ES-24 Tables'!$A$15:$B$20,2,FALSE))
47	=(((($B$10*B47)/(2*(($B$12*$B$13*$B$14)/E47)+($B$10*$B$16)))+$B$15)/((100-$B$17)*0.01))	=(MAX(F47:H47))*(VLOOKUP($B$18,'PFI ES-24 Tables'!$A$15:$B$20,2,FALSE))

ASME B31.3 PFI ES-24 Tables

Minimum Thickness Prior to Bending Tables per PFI ES-24 (2013), Section 7

TABLE 7.2.1
FURNACE BENDING

BEND RADIUS * D	MIN. WT PRIOR TO BENDING * t_{min}
6	1.06
5	1.08
4	1.14
3	1.25

TABLE 7.2.2
INDUCTION AND INCREMENTAL BENDING

BEND RADIUS * D	MIN. WT PRIOR TO BENDING * t_{min}
6	1.06
5	1.08
4	1.1
3	1.14
2	1.22
1.5	1.3

TABLE 7.2.3
ROTARY DRAW BENDING

BEND RADIUS * D	MIN. WT PRIOR TO BENDING * t_{min}
6	1.09
5	1.14
4	1.2
3	1.28

TABLE 7.2.4
RAM AND ROLL BENDING

BEND RADIUS * D	MIN. WT PRIOR TO BENDING * t_{min}
6	1.08
5	1.1
4	1.13
3	1.17

BEND RADIUS * D	MAX FACTOR * tmin
6	1.09
5	1.14
4	1.2
3	1.28
2	1.22
1.5	1.3

ASME B31.3 PFI ES-24 Tables

ATTACHMENT 8.8 – MANUAL MINIMUM WALL THICKNESS CALCULATION PER ASME B31.3 FOR PIPE BENDS – PIPE LINE CLASS P8

Piping Material Class P8	
P	50 psi
D	4.5 in.
S	20000 psi
R_1	3D
E	1.0
W	1.0
Y	0.4
Inside Bend Radius (Intrados)	$I = \frac{4\left(\frac{R1}{D}\right)-1}{4\left(\frac{R1}{D}\right)-2} = \frac{4\left(\frac{3*4.5}{4.5}\right)-1}{4\left(\frac{3*4.5}{4.5}\right)-2} = 1.1$
Outside Bend Radius (Extrados)	$I = \frac{4\left(\frac{R1}{D}\right)+1}{4\left(\frac{R1}{D}\right)+2} = \frac{4\left(\frac{3*4.5}{4.5}\right)+1}{4\left(\frac{3*4.5}{4.5}\right)+2} = 0.93$
Centerline Bend Radius	1.0

Min. Thickness @ Inside Bend Radius (Intrados)

$$\mathbf{tmin} = \mathbf{t} + \mathbf{c} = \frac{\mathbf{PD}}{2\left(\left(\frac{\mathbf{SEW}}{\mathbf{I}}\right)+\mathbf{PY}\right)} + \mathbf{c} = \frac{\frac{50*4.5}{2\left(\left(\frac{20000*1*1}{1.1}\right)+50*0.4\right)}+0.063}{0.875} = \mathbf{0.079\ in.}$$

Min. Thickness @ Outside Bend Radius (Extrados)

$$\mathbf{tmin} = \mathbf{t} + \mathbf{c} = \frac{\mathbf{PD}}{2\left(\left(\frac{\mathbf{SEW}}{\mathbf{I}}\right)+\mathbf{PY}\right)} + \mathbf{c} = \frac{\frac{50*4.5}{2\left(\left(\frac{20000*1*1}{0.93}\right)+50*0.4\right)}+0.063}{0.875} = \mathbf{0.078\ in.}$$

Min. Thickness @ Centerline Bend Radius

$$\mathbf{tmin} = \mathbf{t} + \mathbf{c} = \frac{\mathbf{PD}}{2\left(\left(\frac{\mathbf{SEW}}{\mathbf{I}}\right)+\mathbf{PY}\right)} + \mathbf{c} = \frac{\frac{50*4.5}{2\left(\left(\frac{20000*1*1}{1.0}\right)+50*0.4\right)}+0.063}{0.875} = \mathbf{0.078\ in.}$$

Min. Wall Thickness Prior to Bending

$$\text{tmin} = \max(\text{tmin @ bend}) * \max(\text{material tolerance per PFI ES} - 24)$$

$$\mathbf{tmin} = \mathbf{0.079 * 1.28 = 0.101\ in.}$$

Prepared By: Bailey, Rachel

Digitally signed by Bailey, Rachel
DN: cn=Bailey, Rachel, ou=Users
Date: 2017.05.10 14:19:49 -06'00'

Checked By: Jason C. Jackson

Digitally signed by Jason C. Jackson
DN: cn=Jason C. Jackson, o=AECOM, ou=Piping, email=jason.jackson@aecom.com, c=US
Date: 2017.05.10 14:38:06 -06'00'

ATTACHMENT 8.9 – MINIMUM WALL THICKNESS EXCEL SPREADSHEET (VERSION 1.0); "WALL THICKNESS PRIOR TO BENDING, PER ASME B31.3 (2012) AND PFI ES-24 (2013) SECTION 7" – PIPE LINE CLASS P8

Wall Thickness Prior to Bending. Per ASME B31.3 (2014) Para. 304.2.1 and PFI ES-24 (2013) Section 7

CALCULATION FILE:	-
PROJECT NUMBER:	31269
DATE:	4/5/2017
MATERIAL SPEC:	P8
MATERIAL TYPE:	SMLS
MATERIAL DESIGNATION:	A106 Gr. B
DESIGN PRESSURE (PSIG):	50
DESIGN TEMP. (DEG. F):	-20
S:ALLOWABLE STRESS (PSI):	20000
E (QUALITY FACTOR):	1.00
W (WELD JOINT STENGTH):	1.00
CORROSION ALLOWANCE:	0.063
Y COEFFICIENT:	0.4
MILL TOLERANCE (%):	12.5
RADIUS OF BEND: (D):	2.0

Notes/Assumptions:
1. Worst case fabrication methods per radius of bend from PFI ES-24 (2013) Section 7 were used to calculate minimum wall thickness prior to bending.
2. Standard bend radiuses per PFI ES-24 only. No interpolation available.
3. Mill tolerance applies to all sizes listed below

Preparer:	Date:
Bailey, Rachel	Digitally signed by Bailey, Rachel DN: cn=Bailey, Rachel ou=Users Date: 2017.04.17 12:10:34 -06'00'
Checker:	**Date:**
Jason C. Jackson	Digitally signed by Jason C. Jackson DN: cn=Jason C Jackson, o=AECOM, ou=Piping, email=jason.jacksonwae com.com, c=US Date: 2017.05.10 14:38:35 -06'00'

PIPE SCHEDULES & CORRESPONDING NOMINAL WALL THICKNESSES (IN). PER ASME B36.10M (2004) AND ASME B36.19M (2004)

NOMINAL DIAMETER	ACTUAL DIAMETER	INTRADOS OF BEND	EXTRADOS OF BEND	CENTERLINE OF BEND	MIN. WT @ INTRADOS	MIN WT @ EXTRADOS	MIN. WT @ CENTERLINE	MIN. WT PRIOR TO BENDING	5S	10S	40S	80S	10	20	30	STD	40	60	XS	80	100	120	140	160	XXS
0.50	0.840	1.167	0.900	1.000	0.0734	0.0731	0.0732	0.0895	0.065	0.083	0.109	0.147	0.083	-	0.095	0.109	0.109	-	0.147	0.147	-	-	-	0.188	0.294
0.75	1.050	1.167	0.900	1.000	0.0737	0.0733	0.0735	0.0900	0.065	0.083	0.113	0.154	0.083	-	0.095	0.113	0.113	-	0.154	0.154	-	-	-	0.219	0.308
1.00	1.315	1.167	0.900	1.000	0.0742	0.0737	0.0739	0.0905	0.065	0.109	0.133	0.179	0.109	-	0.114	0.133	0.133	-	0.179	0.179	-	-	-	0.250	0.358
1.50	1.900	1.167	0.900	1.000	0.0752	0.0744	0.0747	0.0917	0.065	0.109	0.145	0.200	0.109	-	0.125	0.145	0.145	-	0.200	0.200	-	-	-	0.281	0.400
2.00	2.375	1.167	0.900	1.000	0.0760	0.0751	0.0754	0.0927	0.065	0.109	0.154	0.218	0.109	-	0.125	0.154	0.154	-	0.218	0.218	-	-	-	0.344	0.436
2.50	2.875	1.167	0.900	1.000	0.0768	0.0757	0.0761	0.0937	0.083	0.120	0.203	0.276	0.120	-	0.188	0.203	0.203	-	0.276	0.276	-	-	-	0.375	0.552
3.00	3.500	1.167	0.900	1.000	0.0778	0.0765	0.0770	0.0949	0.083	0.120	0.216	0.300	0.120	-	0.188	0.216	0.216	-	0.300	0.300	-	-	-	0.438	0.600
4.00	4.500	1.167	0.900	1.000	0.0795	0.0778	0.0784	0.0970	0.083	0.120	0.237	0.337	0.120	-	0.188	0.237	0.237	-	0.337	0.337	-	0.438	-	0.531	0.674
6.00	6.625	1.167	0.900	1.000	0.0830	0.0805	0.0815	0.1013	0.109	0.134	0.280	0.432	0.134	-	-	0.280	0.280	-	0.432	0.432	-	0.562	-	0.719	0.864
8.00	8.625	1.167	0.900	1.000	0.0864	0.0831	0.0843	0.1054	0.109	0.148	0.322	0.500	0.148	0.250	0.277	0.322	0.322	0.406	0.500	0.500	0.594	0.719	0.812	0.906	0.875
10.00	10.750	1.167	0.900	1.000	0.0899	0.0858	0.0873	0.1097	0.134	0.165	0.365	0.500	0.165	0.250	0.307	0.365	0.365	0.500	0.500	0.500	0.594	0.719	0.844	1.000	1.125	1.000
12.00	12.750	1.167	0.900	1.000	0.0932	0.0884	0.0902	0.1137	0.156	0.180	0.375	0.500	0.180	0.250	0.330	0.375	0.406	0.562	0.500	0.688	0.844	1.000	1.125	1.312	1.000
14.00	14.000	1.167	0.900	1.000	0.0953	0.0900	0.0920	0.1163	0.156	0.188	0.375	0.500	0.250	0.312	0.375	0.375	0.438	0.594	0.500	0.750	0.938	1.094	1.250	1.406	-
16.00	16.000	1.167	0.900	1.000	0.0986	0.0926	0.0948	0.1203	0.165	0.188	0.375	0.500	0.250	0.312	0.375	0.375	0.500	0.656	0.500	0.844	1.031	1.219	1.438	1.594	-
18.00	18.000	1.167	0.900	1.000	0.1020	0.0951	0.0977	0.1244	0.165	0.188	0.375	0.500	0.250	0.312	0.438	0.375	0.562	0.750	0.500	0.938	1.156	1.375	1.562	1.781	-
20.00	20.000	1.167	0.900	1.000	0.1053	0.0977	0.1005	0.1285	0.188	0.218	0.375	0.500	0.250	0.375	0.500	0.375	0.594	0.812	0.500	1.031	1.281	1.500	1.750	1.969	-
24.00	24.000	1.167	0.900	1.000	0.1120	0.1028	0.1063	0.1366	0.218	0.250	0.375	0.500	0.250	0.375	0.562	0.375	0.688	0.969	0.500	1.219	1.531	1.812	2.062	2.344	-
26.00	26.000	1.167	0.900	1.000	0.1153	0.1054	0.1091	0.1408	-	-	-	-	0.312	0.500	-	0.375	-	-	0.500	-	-	-	-	-	-
28.00	28.000	1.167	0.900	1.000	0.1186	0.1080	0.1120	0.1447	-	-	-	-	0.312	0.500	0.625	0.375	-	-	0.500	-	-	-	-	-	-
30.00	30.000	1.167	0.900	1.000	0.1219	0.1105	0.1148	0.1488	0.250	0.312	-	-	0.312	0.500	0.625	0.375	-	-	0.500	-	-	-	-	-	-
32.00	32.000	1.167	0.900	1.000	0.1253	0.1131	0.1177	0.1528	-	-	-	-	0.312	0.500	0.625	0.375	0.688	-	0.500	-	-	-	-	-	-
34.00	34.000	1.167	0.900	1.000	0.1286	0.1157	0.1205	0.1569	-	-	-	-	0.312	0.500	0.625	0.375	0.688	-	0.500	-	-	-	-	-	-
36.00	36.000	1.167	0.900	1.000	0.1319	0.1182	0.1234	0.1610	-	-	-	-	0.312	0.500	0.625	0.375	0.750	-	0.500	-	-	-	-	-	-
40.00	40.000	1.167	0.900	1.000	0.1386	0.1234	0.1291	0.1691	-	-	-	-	-	-	-	0.375	-	-	0.500	-	-	-	-	-	-
42.00	42.000	1.167	0.900	1.000	0.1419	0.1260	0.1319	0.1731	-	-	-	-	-	-	-	0.375	-	-	0.500	-	-	-	-	-	-
48.00	48.000	1.167	0.900	1.000	0.1519	0.1337	0.1405	0.1853	-	-	-	-	-	-	-	0.375	-	-	0.500	-	-	-	-	-	-

ATTACHMENT 8.9 – MINIMUM WALL THICKNESS EXCEL SPREADSHEET (VERSION 1.0); "WALL THICKNESS PRIOR TO BENDING, PER ASME B31.3 (2012) AND PFI ES-24 (2013) SECTION 7" – PIPE LINE CLASS P8

Wall Thickness Prior to Bending, Per ASME B31.3 (2014) Para. 304.2.1 and PFI ES-24 (2013) Section 7

CALCULATION FILE:	-
PROJECT NUMBER:	31269
DATE:	4/5/2017
MATERIAL SPEC:	P8
MATERIAL TYPE:	SMLS
MATERIAL DESIGNATION:	A106 Gr. B
DESIGN PRESSURE (PSIG):	50
DESIGN TEMP. (DEG. F):	-20
S:ALLOWABLE STRESS (PSI):	20000
E: (QUALITY FACTOR):	1.00
W: (WELD JOINT STRENGTH):	1.00
CORROSION ALLOWANCE:	0.063
Y COEFFICIENT:	0.4
MILL TOLERANCE (%):	12.5
RADIUS OF BEND (D):	3.0

Notes/Assumptions:
1. Worst case fabrication methods per radius of bend from PFI ES-24 (2013) Section 7 were used to calculate minimum wall thickness prior to bending.
2. Standard bend radiuses per PFI ES-24 only. No interpolation available.
3. Mill tolerance applies to all sizes listed below.

Preparer: Bailey, Rachel — Date: Digitally signed by Bailey, Rachel DN: cn=Bailey, Rachel, c=US Date: 2017.04.17 12:13:28 -04'00'

Checker: Jason C Jackson — Date: Digitally signed by Jason C Jackson DN: cn=Jason C Jackson, c=AECOM, ou=Piping, email=jason.jackson@aecom.com, c=US Date: 2017.05.19 14:44:39 -05'00'

PIPE SCHEDULES & CORRESPONDING NOMINAL WALL THICKNESSES (IN), PER ASME B36.10M (2004) AND ASME B36.19M (2004)

NOMINAL DIAMETER	ACTUAL DIAMETER	INTRADOS OF BEND	EXTRADOS OF BEND	CENTERLINE OF BEND	MIN. WT @ INTRADOS	MIN WT @ EXTRADOS	MIN. WT @ CENTERLINE	MIN. WT PRIOR TO BENDING	5S	10S	40S	80S	10	20	30	STD	40	60	XS	80	100	120	140	160	XXS
0.50	0.840	1.100	0.929	1.000	0.0733	0.0731	0.0732	0.0838	0.065	0.083	0.109	0.147	0.083	-	0.095	0.109	0.109	-	0.147	0.147	-	-	-	0.188	0.294
0.75	1.050	1.100	0.929	1.000	0.0736	0.0734	0.0735	0.0843	0.065	0.083	0.113	0.154	0.083	-	0.095	0.113	0.113	-	0.154	0.154	-	-	-	0.219	0.308
1.00	1.315	1.100	0.929	1.000	0.0741	0.0737	0.0739	0.0848	0.065	0.109	0.133	0.179	0.109	-	0.114	0.133	0.133	-	0.179	0.179	-	-	-	0.250	0.358
1.50	1.900	1.100	0.929	1.000	0.0750	0.0745	0.0747	0.0860	0.065	0.109	0.145	0.200	0.109	-	0.125	0.145	0.145	-	0.200	0.200	-	-	-	0.281	0.400
2.00	2.375	1.100	0.929	1.000	0.0757	0.0751	0.0754	0.0869	0.065	0.109	0.154	0.218	0.109	-	0.125	0.154	0.154	-	0.218	0.218	-	-	-	0.344	0.436
2.50	2.875	1.100	0.929	1.000	0.0765	0.0758	0.0761	0.0879	0.083	0.120	0.203	0.276	0.120	-	0.188	0.203	0.203	-	0.276	0.276	-	-	-	0.375	0.552
3.00	3.500	1.100	0.929	1.000	0.0775	0.0766	0.0770	0.0892	0.083	0.120	0.216	0.300	0.120	-	0.188	0.216	0.216	-	0.300	0.300	-	-	-	0.438	0.600
4.00	4.500	1.100	0.929	1.000	0.0791	0.0780	0.0784	0.1012	0.083	0.120	0.237	0.337	0.120	-	0.188	0.237	0.237	-	0.337	0.337	-	0.438	-	0.531	0.674
6.00	6.625	1.100	0.929	1.000	0.0824	0.0808	0.0815	0.1055	0.109	0.134	0.280	0.432	0.134	-	-	0.280	0.280	-	0.432	0.432	-	0.562	-	0.719	0.864
8.00	8.625	1.100	0.929	1.000	0.0855	0.0834	0.0843	0.1095	0.109	0.148	0.322	0.500	0.148	0.250	0.277	0.322	0.322	0.406	0.500	0.500	0.594	0.719	0.812	0.906	0.875
10.00	10.750	1.100	0.929	1.000	0.0889	0.0862	0.0873	0.1138	0.134	0.165	0.365	0.500	0.165	0.250	0.307	0.365	0.365	0.500	0.500	0.594	0.719	0.844	1.000	1.125	1.000
12.00	12.750	1.100	0.929	1.000	0.0920	0.0889	0.0902	0.1178	0.156	0.180	0.375	0.500	0.180	0.250	0.330	0.375	0.406	0.562	0.500	0.688	0.844	1.000	1.125	1.312	1.000
14.00	14.000	1.100	0.929	1.000	0.0940	0.0905	0.0920	0.1203	0.156	0.188	0.375	0.500	0.250	0.312	0.375	0.375	0.438	0.594	0.500	0.750	0.938	1.094	1.250	1.406	-
16.00	16.000	1.100	0.929	1.000	0.0971	0.0932	0.0948	0.1243	0.165	0.188	0.375	0.500	0.250	0.312	0.375	0.375	0.500	0.656	0.500	0.844	1.031	1.219	1.438	1.594	-
18.00	18.000	1.100	0.929	1.000	0.1003	0.0959	0.0977	0.1283	0.165	0.188	0.375	0.500	0.250	0.312	0.438	0.375	0.562	0.750	0.500	0.938	1.156	1.375	1.562	1.781	-
20.00	20.000	1.100	0.929	1.000	0.1034	0.0985	0.1005	0.1323	0.188	0.218	0.375	0.500	0.250	0.375	0.500	0.375	0.594	0.812	0.500	1.031	1.281	1.500	1.750	1.969	-
24.00	24.000	1.100	0.929	1.000	0.1097	0.1038	0.1063	0.1404	0.218	0.250	0.375	0.500	0.250	0.375	0.562	0.375	0.688	0.969	0.500	1.219	1.531	1.812	2.062	2.344	-
26.00	26.000	1.100	0.929	1.000	0.1128	0.1065	0.1091	0.1444	-	-	-	-	0.312	0.500	-	0.375	-	-	0.500	-	-	-	-	-	-
28.00	28.000	1.100	0.929	1.000	0.1160	0.1091	0.1120	0.1484	-	-	-	-	0.312	0.500	0.625	0.375	-	-	0.500	-	-	-	-	-	-
30.00	30.000	1.100	0.929	1.000	0.1191	0.1118	0.1148	0.1524	0.250	0.312	-	-	0.312	0.500	0.625	0.375	-	-	0.500	-	-	-	-	-	-
32.00	32.000	1.100	0.929	1.000	0.1222	0.1144	0.1177	0.1565	-	-	-	-	0.312	0.500	0.625	0.375	0.688	-	0.500	-	-	-	-	-	-
34.00	34.000	1.100	0.929	1.000	0.1254	0.1171	0.1205	0.1605	-	-	-	-	0.312	0.500	0.625	0.375	0.688	-	0.500	-	-	-	-	-	-
36.00	36.000	1.100	0.929	1.000	0.1285	0.1197	0.1234	0.1645	-	-	-	-	0.312	0.500	0.625	0.375	0.750	-	0.500	-	-	-	-	-	-
40.00	40.000	1.100	0.929	1.000	0.1348	0.1250	0.1291	0.1725	-	-	-	-	-	-	-	0.375	-	-	0.500	-	-	-	-	-	-
42.00	42.000	1.100	0.929	1.000	0.1379	0.1277	0.1319	0.1765	-	-	-	-	-	-	-	0.375	-	-	0.500	-	-	-	-	-	-
48.00	48.000	1.100	0.929	1.000	0.1473	0.1356	0.1405	0.1886	-	-	-	-	-	-	-	0.375	-	-	0.500	-	-	-	-	-	-

CALCULATION

31269-16-CALC-0402

CALCULATION FOR PIPING WALL THICKNESS FOR SAFETY SIGNIFICANT PIPE MATERIAL CLASSES

AECOM ATKINS AREVA CALCULATION COVER SHEET		Calculation No. 31269-16-CALC-0402			
		Prel	Final	Void	Revision
			X		0
CLIENT	Washington River Protection Solutions, LLC	**Discipline**	Piping		
PROJECT TITLE	Low Activity Waste Pretretment System	**Project No.**	31269 (T5L01)		
SUBJECT/FEATURE	Calculation for Piping Wall Thickness for Safety Significant Pipe Material Classes	**No. of Sheets**	32		

CALCULATION OBJECTIVE

Determine the required piping wall thickness for all safety significant piping line classes (P3, P4, P5, P7, P9 and P12) based on the specification design conditions. Calculations shall be in accordance with the requirements of Section 304, "Pressure Design of Components" in ASME B31.3 and the respective material specification (ASTM).

RESULTS / CONCLUSIONS

Attachments 8.3 – 8.15 have specific sizes indicated.

- P3; Carbon Steel ASTM A106 Gr. B SMLS
  Threaded Joint: ½" – 1½": Schedule XS;
  Welded Joints: ½" – 1½": Schedule XS; 2" – 6": STD Wall
- P4; Stainless Steel ASTM A312 TP304/304L SMLS
  Threaded Joints: ½" – 1½": Schedule 80S;
  Welded Joints: ½" – 12": Schedule 40S
- P5; Stainless Steel ASTM A312 TP316/316L SMLS
  Welded Joints: ½" – 12": Schedule 40S
- P7; Stainless Steel ASTM A312 TP316/316L SMLS
  Welded Joints: 2" – 3": Schedule 40S
- P9; Stainless Steel ASTM TP304/304L SMLS (½" – 4") / EFW 100% X-Ray (6" – 36")
  Threaded Joint: ½" – 1½": Schedule 80S;
  Welded Joints: ½" – 4": Schedule 40S, 6" – 24": Schedule 10S, 30" – 36": STD Wall
- P12; Stainless Steel ASTM A269-TP-316L SMLS (¼" – ½")
  Welded Joints: ¼" – 3/8": 0.035"; ½": 0.049"

ASSUMPTIONS / OPEN ITEMS

There are no open items in this calculation.

AECOM ATKINS AREVA CALCULATION COVER SHEET		Calculation No. 31269-16-CALC-0402			
		Prel	Final	Void	Revision
			X		0
CLIENT	Washington River Protection Solutions, LLC	**Discipline**	Piping		
PROJECT TITLE	Low Activity Waste Pretretment System	**Project No.**	31269 (T5L01)		
SUBJECT/FEATURE	Calculation for Piping Wall Thickness for Safety Significant Pipe Material Classes	**No. of Sheets**	32		

DESIGN CRITERIA / DESIGN BASIS (with Reference to Source of Data)

The required wall thicknesses for piping material classes P3, P4, P5, P7, P9 and P12 were determined based on the calculation for straight pipe under internal pressure per ASME B31.3 Section 304 "Pressure Design of Components".

Additionally, for the double containment piping system, which utilizes piping material class P7 for carrier piping and piping material class P8 for secondary containment piping, it was required to verify that the wall thickness of the carrier piping was suitable for the external pressure it would experience during pneumatic testing. During a pneumatic test of the containment piping, the carrier piping will experience 55 psig of external pressure. Therefore, the adequacy of the wall thickness, which was specified in the Piping Material Specification 31269-16-2-001, was verified based on the calculation for straight pipe under external pressure per ASME B31.3 Section 304.1.3 "Straight Pipe Under External Pressure" and the procedure outlined in the BPV Code, Section VIII, Division 1, UG-28 through UG-30.

Lastly, calculations were completed to determine the minimum required thicknesses of straight pipe prior to bending in order to be sufficient to meet the minimum thickness requirements after bending for the following piping classes:

- P5 (3D and 5D bends)
- P7 (5D bends)
- P9 (3D and 5D bends)

Minimum wall thickness after bending, in its finished form, was calculated in accordance with ASME B31.3 Section 304.2.1 "Pipe Bends." Subsequently in order to compensate for wall thinning from bending, a calculation was completed to determine the appropriate material allowance considering the bending method, material, pipe size, bend radius and the bend fabricator's equipment in accordance with PFI ES-24 Section 7.0 "Material Allowances."

REFERENCES / SOURCE DOCUMENTS

See Calculation Sheet, Section 4.0.

AECOM ATKINS AREVA

CALCULATION COVER SHEET

Calculation No. 31269-16-CALC-0402			
Prel	Final	Void	Revision
	X		0

CLIENT	Washington River Protection Solutions, LLC	**Discipline**	Piping
PROJECT TITLE	Low Activity Waste Pretretment System	**Project No.**	31269 (T5L01)
SUBJECT/FEATURE	Calculation for Piping Wall Thickness for Safety Significant Pipe Material Classes	**No. of Sheets**	32

FOR CALCULATIONS GENERATED BY COMPUTER PROGRAM

Computer Program Name	Version or Date	Operating System Type	Validated
Excel Spreadsheet: "Minimum Required Wall Thickness of Straight Pipe Under Internal Pressure, Per ASME B31.3"	Version 1.5 (9/15/16)	Window 7 (64 Bit)	Not Required. Checked by Hand Calculation.
Excel Spreadsheet: "Wall Thickness Prior to Bending, Per ASME B31.3 (2014) Para. 304.2.1 and PFI ES-24 (2013) Section 7"	Version 1.0	Windows 7 (64 Bit)	Not Required. Checked by Hand Calculation.

QUALITY CLASSIFICATION		TBD	YES	NO
	SAFETY RELATED?		X	
	DESIGN VERIFICATION REQUIRED?		X	

Quality Level

FQA ☒ EQA ☐ CQA ☐ TBD ☐

AECOM ATKINS AREVA

CALCULATION COVER SHEET

Calculation No. 31269-16-CALC-0402			
Prel	Final	Void	Revision
	X		0

CLIENT	Washington River Protection Solutions, LLC	Discipline	Piping
PROJECT TITLE	Low Activity Waste Pretreatment System	Project No.	31269 (T6L01)
SUBJECT/FEATURE	Calculation for Piping Wall Thickness for Safety Significant Pipe Material Classes	No. of Sheets	32

REV. NO.	REVISION REASON	PREPARED BY	DATE	CHECKED BY	DATE	VERIFIED BY	DATE	APPROVED BY	DATE
0	Final	REB	5/15/17	JCJ	5/15/17	MQ	05/15/2017	MSJ	5/17/17
		(G. Jones for REB)		JCJ					

Sealed / Stamped By: Matthew S. Jend PE

Registration No. 54709 State Washington

Date: May 17, 2017

PE Seal or Stamp

MATTHEW SEAN JEND
STATE OF WASHINGTON
54709
REGISTERED
PROFESSIONAL ENGINEER

5/17/17

For Permitting
MSJ 5/17/17

AECOM ATKINS AREVA

CALCULATION COVER SHEET

Calculation No.			
31269-16-CALC-0402			
Prel	Final	Void	Revision
	X		0

CLIENT	Washington River Protection Solutions, LLC	**Discipline**	Piping
PROJECT TITLE	Low Activity Waste Pretretment System	**Project No.**	31269 (T5L01)
SUBJECT/FEATURE	Calculation for Piping Wall Thickness for Safety Significant Pipe Material Classes	**No. of Sheets**	32

CALCULATION REVISIONS PAGE

Rev. No.	Pages	Description of Changes
0	All	Approved for Design

TABLE OF CONTENTS

1.0 CALCULATION OBJECTIVE 1

2.0 DESIGN CRITERIA / DESIGN BASIS 1

3.0 ASSUMPTIONS / OPEN ITEMS 10

4.0 REFERENCES / SOURCE DOCUMENTS 10

5.0 APPROACH / METHODOLOGY 11

6.0 COMPUTATIONS 11

7.0 RESULTS / CONCLUSIONS 11

8.0 ATTACHMENTS 12

1.0 CALCULATION OBJECTIVE

Determine the required piping wall thicknesses for all safety significant piping line classes (P3, P4, P5, P7, P9 and P12) based on the specification design conditions. Calculations shall be in accordance with the requirements of Section 304, "Pressure Design of Components" in ASME B31.3 and the respective material specification (ASTM).

2.0 DESIGN CRITERIA / DESIGN BASIS

The required wall thicknesses for piping material classes P3, P4, P5, P7, P9 and P12 were determined based on the calculation for straight pipe under internal pressure per ASME B31.3 Section 304 "Pressure Design of Components". The equations and associated nomenclature is as follows.

ASME B31.3 Section 304.1.1(a) Equation 2:

$$t_m = t + c \qquad (2)$$

ASME B31.3 Section 304.1.1(b):

c = sum of the mechanical allowances (thread or groove depth) plus corrosion and erosion allowances. For threaded components, the nominal thread depth (dimension h of ASME B1.20.1, or equivalent) shall apply. For machined surfaces or grooves where the tolerance is not specified, the tolerance shall be assumed to be 0.5 mm (0.02 in.) in addition to the specified depth of the cut.

D = outside diameter of pipe as listed in tables of standards or specifications or as measured

d = inside diameter of pipe. For pressure design calculation, the inside diameter of the pipe is the maximum value allowable under the purchase specification.

E = quality factor from Table A-1A or A-1B

P = internal design gage pressure

S = stress value for material from Table A-1

T = pipe wall thickness (measured or minimum in accordance with the purchase specification)

t = pressure design thickness, as calculated in accordance with para. 304.1.2 for internal pressure or as determined in accordance with para. 304.1.3 for external pressure

t_m = minimum required thickness, including mechanical, corrosion, and erosion allowances

W = weld joint strength reduction factor in accordance with para. 302.3.5(e)

Y = coefficient from Table 304.1.1, valid for $t < D/6$ and for materials shown. The value of Y may be interpolated for intermediate temperatures.

ASME B31.3 Section 304.1.2 Equation 3a:

$$t = \frac{PD}{2(SEW + PY)} \qquad (3a)$$

Threaded pipe was determined using the greater of the thickness calculation per ASME B31.3 Section 304.1.2 or the thickness shown in ASME B31.3 Table 314.2.1.

ASME B31.3 Table 314.2.1:

Table 314.2.1 Minimum Thickness of External Threaded Components

Fluid Service	Notch-Sensitive Material	Size Range [Note (1)] DN	Size Range [Note (1)] NPS	Min. Wall Thickness [Note (2)]
Normal	Yes [Note (3)]	≤ 40	≤ 1½	Sch. 80
		50	2	Sch. 40
		65–150	2½–6	Sch. 40
Normal	No [Note (4)]	≤ 50	≤ 2	Sch. 40S
		65–150	2½–6	Sch. 40S
Category D	Either	≤ 300	≤ 12	In accordance with para. 304.1.1

GENERAL NOTE: Use the greater of para. 304.1.1 or thickness shown in this Table.

NOTES:

(1) For sizes > DN 50 (NPS 2), the joint shall be safeguarded (see Appendix G) for a fluid service that is flammable, toxic, or damaging to human tissue.

(2) Nominal wall thicknesses is listed for Sch. 40 and 80 in ASME B36.10M and for Sch. 40S in ASME B36.19M.

(3) For example, carbon steel.

(4) For example, austenitic stainless steel.

Inputs to this calculation were compiled as seen below:

TABLE 1

Piping Line Class[1]	Nominal Pipe Size[2] / End Type	Internal Design Gage Pressure (P) (psig) and Design Temperature (T) (°F)	Corrosion Allowance (inches)[3]	Material Classification[3]
P3	½" – 1½" Threaded	100 psig @ -20/100°F 100 psig @ 200°F	0.063"	ASTM A106 Gr. B, SMLS
	½" – 6" Welded			
P4	½" – 1½" Threaded	165 psig @ -20/100°F 165 psig @ 200°F	0.063"	ASTM A312 TP304/304L, SMLS
	½" – 12" Welded			
P5	½" – 12" Welded	400 psig @ -20/100°F 400 psig @ 170°F	0.063"	ASTM A312 TP316/316L, SMLS
P7	2" – 3" Welded	720 psig @ -20/100°F 620 psig @ 200°F	0.063"	ASTM A312 TP316/316L, SMLS
P9	½" – 1½" Threaded	100 psig @ -20/100°F 100 psig @ 200°F	0.063"	ASTM A312 TP304/304L, SMLS
	½" – 4" Welded			
	6" – 36" Welded			ASTM A312 TP304/304L, EFW (100% X-Ray)
P12	¼" – ½" Welded	400 psig @ -20/100°F 400 psig @ 200°F	0.0"	ASTM A269 TP-316L, SMLS

Notes to Table 1:

1. All safety significant piping line classes are per ASME B31.3 for Normal Fluid Service.
2. Outside diameter of pipe is as listed in ASME B36.10M or ASME B36.19M, as appropriate. Outside diameter of tubing is equivalent to the nominal pipe size.
3. The corrosion allowance and recommended material are in accordance with 31269-21-RPT-0001.

Additional inputs, in accordance with ASME B31.3, are as follows:

TABLE 2 (Information per ASME B31.3 (2012))

Piping Line Class	Quality Factor (E) (Table A-1B)	Stress Value (S) (Table A-1)	Weld Joint (W) (Para. 302.3.5.e)	Coefficient (Y) (Table 304.1.1)
P3	1	20 ksi	1	0.4
P4	1	20 ksi	1	0.4
P5	1	20 ksi	1	0.4
P7	1	20 ksi	1	0.4
P9	1	20 ksi	1	0.4
P12	1	16.7 ksi	1	0.4

Lastly, the mill tolerance was verified in the respective ASTM. The minimum wall thickness was specified to not be more than 12.5% under the specified wall thickness for pipe material classes P3, P4, P5, P7 and P9. The minimum wall thickness was specified to not be more than 15% under the specified wall thickness for pipe material class P12.

Additionally, for the double containment piping system, which utilizes piping material class P7 for carrier piping and piping material class P8 for secondary containment piping, it was required to verify that the wall thickness of the carrier piping was suitable for the external pressure it would experience during pneumatic testing. During a pneumatic test of the containment piping, the carrier piping will experience 55 psig of external pressure. Therefore, the adequacy of the wall thickness, which was specified in the Piping Material Specification 31269-16-2-001, was verified based on the calculation for straight pipe under external pressure per ASME B31.3 Section 304.1.3 "Straight Pipe Under External Pressure" and the procedure outlined in the BPV Code, Section VIII, Division 1, UG-28 through UG-30. The equations and associated nomenclature are as follows.

ASME B31.3 Section 304.1.3:

304.1.3 Straight Pipe Under External Pressure. To determine wall thickness and stiffening requirements for straight pipe under external pressure, the procedure outlined in the BPV Code, Section VIII, Division 1, UG-28 through UG-30 shall be followed, using as the design length, L, the running centerline length between any two sections stiffened in accordance with UG-29. As an exception, for pipe with $D_o/t < 10$, the value of S to be used in determining P_{a2} shall be the lesser of the following values for pipe material at design temperature:

(a) 1.5 times the stress value from Table A-1 of this Code, or

(b) 0.9 times the yield strength tabulated in Section II, Part D, Table Y-1 for materials listed therein

(The symbol D_o in Section VIII is equivalent to D in this Code.)

ASME BPVC Section VIII Division 1:

UG-28 THICKNESS OF SHELLS AND TUBES UNDER EXTERNAL PRESSURE

(a) Rules for the design of shells and tubes under external pressure given in this Division are limited to cylindrical shells, with or without stiffening rings, tubes, and spherical shells. Three typical forms of cylindrical shells are shown in Fig. UG-28. Charts used in determining minimum required thicknesses of these components are given in Subpart 3 of Section II, Part D.

(b) The symbols defined below are used in the procedures of this paragraph:

A = factor determined from Fig. G in Subpart 3 of Section II, Part D and used to enter the applicable material chart in Subpart 3 of Section II, Part D. For the case of cylinders having D_o/t values less than 10, see UG-28(c)(2).

B = factor determined from the applicable material chart or table in Subpart 3 of Section II. Part D for maximum design metal temperature [see UG-20(c)]

D_o = outside diameter of cylindrical shell course or tube

E = modulus of elasticity of material at design temperature. For external pressure design in accordance with this Section, the modulus of elasticity to be used shall be taken from the applicable materials chart in Subpart 3 of Section II, Part D. (Interpolation may be made between lines for intermediate temperatures.)

L = total length, in. (mm), of a tube between tubesheets, or design length of a vessel section between lines of support (see Fig. UG-28.1). A line of support is:

(1) a circumferential line on a head (excluding conical heads) at one-third the depth of the head from the head tangent line as shown on Fig. UG-28;

(2) a stiffening ring that meets the requirements of UG-29;

(3) a jacket closure of a jacketed vessel that meets the requirements of 9-5;

(4) a cone-to-cylinder junction or a knuckle-to-cylinder junction of a toriconical head or section that satisfies the moment of inertia requirement of 1-8.

P = external design pressure [see Note in UG-28(f)]

P_a = calculated value of maximum allowable external working pressure for the assumed value of t, [see Note in (f) below]

R_o = outside radius of spherical shell

t = minimum required thickness of cylindrical shell or tube, or spherical shell, in. (mm)

t_s = nominal thickness of cylindrical shell or tube, in. (mm)

ASME BPVC Section VIII Division 1, Equation for maximum allowable external pressure for cylinders having a diameter to thickness ratio value greater than or equal to 10:

$$P_a = \frac{4B}{3(D_o/t)}$$

Inputs to this calculation were compiled as seen below:

TABLE 3		
Piping Material Class P7	2" NPS	3" NPS
D_o (1)	2.375"	3.5"
t (1)	(0.154") * (1-0.125) – 0.063" = 0.072"	(0.216") * (1-.125) – 0.063" = 0.126"
L (2)	10 ft. = 120 in	10 ft. = 120 in
D_o / t (3)	32.9	27.8
L / D_o (3)	50.5	34.3
A (4)	0.00106	0.00146
B (4)	9772	10979

Notes for Table 3:

1. Actual outside diameter is as specified in ASME B36.19M. Thickness is calculated using the nominal schedule thickness per ASME B36.19M minus the mill and corrosion allowances.
2. The total length of the pipe between lines of support was defined per ASME BPVC Section VIII Division 1 UG-28. Pipe will be supported every 10 ft. (120 in.) by spacers to ensure the annular space between the carrier and containment piping remains uniform.
3. Calculated value.
4. Determined per ASME BPVC Section II Part D Subpart 3 Figure G and Figure HA-2. Tabular values for Figure G and Figure HA-2 are specified in Table G and Table HA-2, respectively.

Lastly, calculations were completed to determine the minimum required thickness of straight pipe prior to bending in order to be sufficient to meet the minimum thickness requirements after bending for the following piping classes:

- P5 (3D and 5D bends)
- P7 (5D bends)
- P9 (3D and 5D bends)

Minimum wall thickness after bending, in its finished form, was calculated in accordance with ASME B31.3 Section 304.2.1 "Pipe Bends" and then in order to compensate for wall thinning from bending, a calculation was completed to determine the appropriate material allowance considering the bending method, material, pipe size, bend radius and the bend fabricator's equipment in accordance with PFI ES-24 Section 7.0 "Material Allowances." The equations and associated nomenclature are as follows.

ASME B31.3 Section 304.2.1:

304.2.1 Pipe Bends. The minimum required thickness, t_m, of a bend, after bending, in its finished form, shall be determined in accordance with eqs. (2) and (3c)

ASME B31.3 Section 304.1.1.a Equation 2:

$$t_m = t + c \qquad (2)$$

ASME B31.3 Section 304.2.1 Equation 3c – 3e:

$$t = \frac{PD}{2[(SEW/I) + PY]} \qquad (3c)$$

where at the intrados (inside bend radius)

$$I = \frac{4(R_1/D) - 1}{4(R_1/D) - 2} \qquad (3d)$$

and at the extrados (outside bend radius)

$$I = \frac{4(R_1/D) + 1}{4(R_1/D) + 2} \qquad (3e)$$

and at the sidewall on the bend centerline radius, $I = 1.0$, and where

R_1 = bend radius of welding elbow or pipe bend

PFI ES-24 Section 7.0:

7.0 MATERIAL ALLOWANCES

7.1 The following recommendations for material allowances will vary with the bending method, material, pipe size, bend radius and the bend fabricator's equipment. It is suggested that the purchaser contact the fabricator for specific information.

7.2 To compensate for wall thinning from bending, Tables 7.2.1, 7.2.2, 7.2.3, and 7.2.4 can be used as a guide for ordering pipe for the appropriate process. Experience indicates that the minimum thickness of straight pipe shown in the tables should be sufficient to meet the minimum thickness requirements after bending. Interpolation is permissible for bending to intermediate radii.

PFI ES-24 Table 7.2.1 – Table 7.2.4:

TABLE 7.2.1
FURNACE BENDING

Bend Radius	Minimum Thickness Prior to Bending
6D	1.06 tm
5D	1.08 tm
4D	1.14 tm
3D	1.25 tm

TABLE 7.2.2
INDUCTION AND INCREMENTAL BENDING

Bend Radius	Minimum Thickness Prior to Bending
6Dn	1.06 tm
5Dn	1.08 tm
4Dn	1.10 tm
3Dn	1.14 tm
2Dn	1.22 tm
1.5Dn	1.30 tm

TABLE 7.2.3
ROTARY DRAW BENDING

Bend Radius	Minimum Thickness Prior to Bending
6Dn	1.09 tm
5Dn	1.14 tm
4Dn	1.20 tm
3Dn	1.28 tm

TABLE 7.2.4
RAM AND ROLL BENDING

Bend Radius	Minimum Thickness Prior to Bending
6Dn	1.08 tm
5Dn	1.10 tm
4Dn	1.13 tm
3Dn	1.17 tm

Inputs to this calculation were as summarized in Table 1. The maximum thinning for each bend radius as a result of the manufacturing processes listed in PFI ES-24 Tables 7.2.1-7.2.4 was used to calculate the most conservative required minimum wall thickness prior to bending.

3.0 ASSUMPTIONS / OPEN ITEMS

There are no open items in this calculation.

4.0 REFERENCES / SOURCE DOCUMENTS

1. Excel Spreadsheet (Version 1.5); *"Minimum Required Wall Thickness of Straight Pipe Under Internal Pressure, Per ASME B31.3"*
2. Excel Spreadsheet (Version 1.0); "*Wall Thickness Prior to Bending, Per ASME B31.3 (2012) and PFI ES-24 (2013) Section 7*"
3. ASME B31.3 (2012); *Process Piping*
4. ASME B36.10M (2004 R2010); *Welded and Seamless Wrought Steel Pipe*
5. ASME B36.19M (2004 R2010); *Stainless Steel Pipe*
6. ASME BPVC Section II Part D (2013); *Materials Properties (Customary)*
7. ASME BPVC Section VIII Division 1 (2013); *Rules for Construction of Pressure Vessels*
8. ASTM A106/A106M (2014); *Standard Specification for Seamless Carbon Steel Pipe for High-Temperature Service*
9. ASTM A269 (2013); *Standard Specification for Seamless and Welded Austenitic Stainless Steel Tubing for General Service*
10. ASTM A312/A312M (2015); *Standard Specification for Seamless, Welded and Heavily Cold Worked Austenitic Stainless Steel Pipes*
11. PFI ES-24 (2013); *Pipe Bending Methods, Tolerances, Process and Material Requirements*
12. 24590-WPT-ICD-MG-01-030 (Revision 0); *ICD 30 – Interface Control Document for Direct LAW Feed*
13. 31269-16-2-001 (Revision 0); *Piping Material Specification*
14. 31269-22-DBD-001 (Revision 1); *Design Basis Document*
15. 31269-21-RPT-0001 (Revision 0); *Material of Construction Evaluation*

5.0 APPROACH / METHODOLOGY

Excel Spreadsheet (Version 1.5); *"Minimum Required Wall Thickness of Straight Pipe Under Internal Pressure, Per ASME B31.3,"* was developed in order to facilitate a semi-automatic calculation of straight sections of pipe per ASME B31.3. This spreadsheet has been locked in order to prevent any manual modification. A printout of all macros and formulas can be seen in Attachment 8.1. This calculation was verified and is substantiated by a manual wall thickness calculation as seen in Attachment 8.2.

Manual calculations were completed for the calculation of straight sections of pipe material class P12 under internal pressure per ASME B31.3 as seen in Attachment 8.8.

Manual calculations were completed for the calculation of straight sections of pipe under external pressure per ASME B31.3 as seen in Attachment 8.9.

Excel Spreadsheet Version (1.0); "*Wall Thickness Prior to Bending, Per ASME B31.3 (2012) and PFI ES-24 (2013) Section 7*" was developed in order to facilitate a semi-automatic calculation of pipe bends per ASME B31.3 and PFI ES-24. This spreadsheet has been locked in order to prevent any manual modification. A printout of all macros and formulas can be seen in Attachment 8.10. This calculation was verified and is substantiated by a manual wall thickness calculation as seen in Attachment 8.11.

6.0 COMPUTATIONS

Computations can be seen in Attachments 8.3 – 8.9 and 8.12 – 8.15.

7.0 RESULTS / CONCLUSIONS

Attachments 8.3 – 8.9 and 8.12 – 8.15 have specific sizes indicated.

- P3; Carbon Steel ASTM A106 Gr. B SMLS
  Threaded Joint: ½" – 1½": Schedule XS;
  Welded Joints: ½" – 1½": Schedule XS; 2" – 6": STD Wall

- P4; Stainless Steel ASTM A312 TP304/304L SMLS
  Threaded Joints: ½" – 1½": Schedule 80S;
  Welded Joints: ½" – 12": Schedule 40S

- P5; Stainless Steel ASTM A312 TP316/316L SMLS
  Welded Joints: ½" – 12": Schedule 40S

- P7; Stainless Steel ASTM A312 TP316/316L SMLS
  Welded Joints: 2" – 3": Schedule 40S

- P9; Stainless Steel ASTM TP304/304L SMLS (½" – 4") / EFW 100% X-Ray (6" – 36")
  Threaded Joint: ½" – 1½": Schedule 80S;
  Welded Joints: ½" – 4": Schedule 40S, 6" – 24": Schedule 10S, 30" – 36": STD Wall

- P12; Stainless Steel ASTM A269-TP-316L SMLS (¼" – ½")
  Welded Joints: ¼" – 3/8": 0.035"; ½": 0.049"

8.0 ATTACHMENTS

8.1. Macro and Formula Print out of Excel Spreadsheet (Version 1.5); *"Minimum Required Wall Thickness of Straight Pipe Under Internal Pressure, Per ASME B31.3"*

8.2. Manual Minimum Wall Thickness Calculation per ASME B31.3 – Pipe Line Class P4

8.3. Excel Spreadsheet (Version 1.5); *"Minimum Required Wall Thickness of Straight Pipe Under Internal Pressure, Per ASME B31.3"* – Pipe Line Class P3

8.4. Excel Spreadsheet (Version 1.5); *"Minimum Required Wall Thickness of Straight Pipe Under Internal Pressure, Per ASME B31.3"* – Pipe Line Class P4

8.5. Excel Spreadsheet (Version 1.5); *"Minimum Required Wall Thickness of Straight Pipe Under Internal Pressure, Per ASME B31.3"* – Pipe Line Class P5

8.6. Excel Spreadsheet (Version 1.5); *"Minimum Required Wall Thickness of Straight Pipe Under Internal Pressure, Per ASME B31.3"* – Pipe Line Class P7

8.7. Excel Spreadsheet (Version 1.5); *"Minimum Required Wall Thickness of Straight Pipe Under Internal Pressure, Per ASME B31.3"* – Pipe Line Class P9

8.8. Manual Minimum Wall Thickness Calculation per ASME B31.3 for Straight Pipe Under Internal Pressure – Pipe Line Class P12

8.9. Manual Minimum Wall Thickness Calculation per ASME B31.3 for Straight Pipe Under External Pressure – Pipe Line Class P7

8.10. Macro and Formula Print out of Excel Spreadsheet Version (1.0); "*Wall Thickness Prior to Bending, Per ASME B31.3 (2012) and PFI ES-24 (2013) Section 7*"

8.11. Manual Minimum Wall Thickness Calculation per ASME B31.3 for Pipe Bends – Pipe Line Class P5

8.12. Excel Spreadsheet (Version 1.0); "*Wall Thickness Prior to Bending, Per ASME B31.3 (2012) and PFI ES-24 (2013) Section 7*" – Pipe Line Class P5

8.13. Excel Spreadsheet (Version 1.0); "*Wall Thickness Prior to Bending, Per ASME B31.3 (2012) and PFI ES-24 (2013) Section 7*" – Pipe Line Class P7

8.14. Excel Spreadsheet (Version 1.0); "*Wall Thickness Prior to Bending, Per ASME B31.3 (2012) and PFI ES-24 (2013) Section 7*" – Pipe Line Class P9

ATTACHMENT 8.1 - MACRO AND FORMULA PRINT OUT OF EXCEL SPREADSHEET (VERSION 1.5); "MINIMUM REQUIRED WALL THICKNESS OF STRAIGHT PIPE UNDER INTERNAL PRESSURE, PER ASME B31.3"

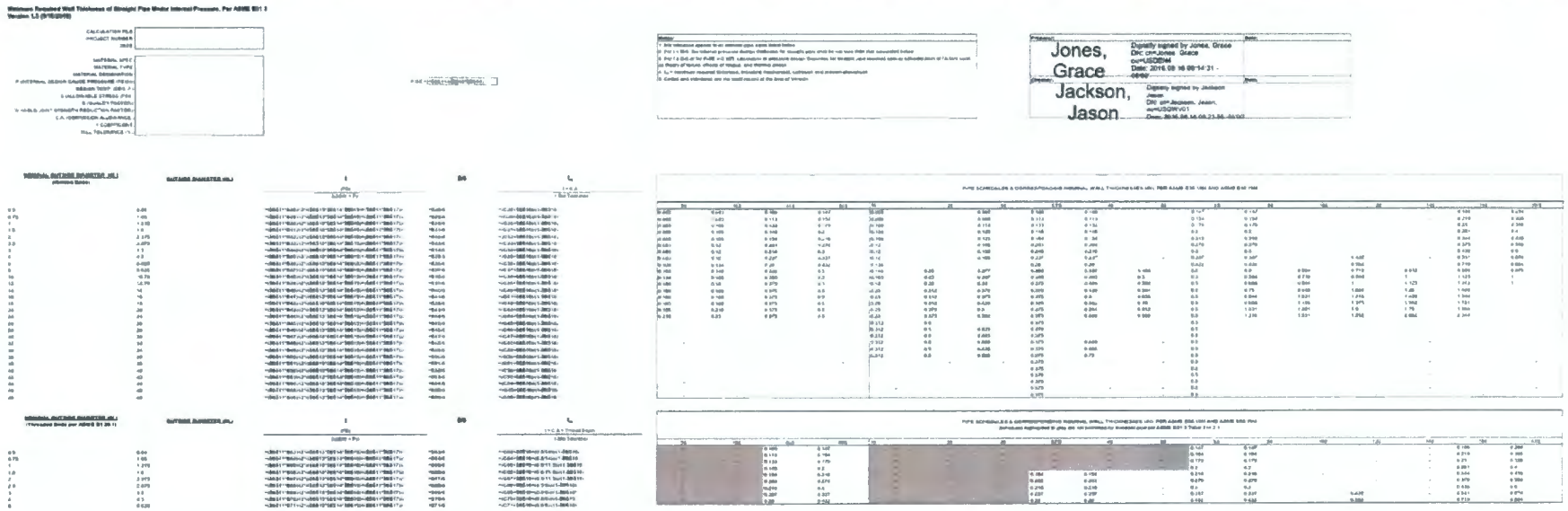

ATTACHMENT 8.2 - MANUAL MINIMUM WALL THICKNESS CALCULATION PER ASME B31.3 – PIPE LINE CLASS P4

PIPE WALL THICKNESS CALCULATION PER ASME B31.3 "STRAIGHT PIPE UNDER INTERNAL PRESSURE"

CODE	ASME B31.3	OTHER	-	CALC. NO.	-
MATERIAL	316/316L	ASTM	A312	PREPARED BY:	Bailey, Rachel — Digitally signed by Bailey, Rachel DN: cn=Bailey, Rachel, ou=Users Date: 2017.04.17 11:51:36 -06'00'
GRADE	-	CLASS	-		
SEAMLESS	-	WELDED (W)	1.00		
PRESSURE (P)	165	TEMP.	200°F	CHECKED BY:	Jason C. Jackson — Digitally signed by Jason C. Jackson DN: cn=Jason C. Jackson, o=AECOM, ou=Piping, email=jason.jackson@aecom.com, c=US Date: 2017.05.10 15:09:59 -06'00'
STRESS (S)	20000	FACTOR (γ)	0.4		
BASED ON	1.00 LONG, JT. FACTOR (E)				
CORROSION ALLOWANCE (C)	0.0630	MILL TOLERANCE (M) %	0.125		

$t_m = \frac{P}{2(SEW+P\gamma)} \times D + C / (1-M)$											$k = \frac{P}{2(SEW+P\gamma)} = \frac{165}{40132} = 0.004111$	NOMINAL SIZE
	k	x	D	=		+	C	=		/	(1-M)	t_m
	0.004111	x	12.75	=	0.0524	+	0.063	=	0.1154	/	0.875	= 0.1319	12
											T=	SCH:

t_m = MINIMUM REQUIRED THICKNESS

D = OUTSIDE DIAMETER IN INCHES

T = SELECTED WALL THICKNESS

k = CALCULATED CONSTANT

M = MILL TOLERANCE = (PER ASTM SPEC)

ATTACHMENT 8.3 – EXCEL SPREADSHEET (VERSION 1.5); "MINIMUM REQUIRED WALL THICKNESS OF STRAIGHT PIPE UNDER INTERNAL PRESSURE, PER ASME B31.3" – PIPE LINE CLASS P3

Minimum Required Wall Thickness of Straight Pipe Under Internal Pressure, Per ASME B31.3
Version 1.5 (9/15/2016)

CALCULATION FILE	-
PROJECT NUMBER	31269
DATE	9/17/2016
MATERIAL SPEC	P3
MATERIAL TYPE	SS316
MATERIAL DESIGNATION	A106 GR. B
P: INTERNAL DESIGN GAUGE PRESSURE (PSIG)	100
DESIGN TEMP. (DEG. F)	200
S: ALLOWABLE STRESS (PSI)	20000
E: (QUALITY FACTOR)	1.00
W: WELD JOINT STRENGTH REDUCTION FACTOR	1.00
C.A. (CORROSION ALLOWANCE)	0.063
Y COEFFICIENT	0.4
MILL TOLERANCE (%)	0.125

P/SE = 0.005

Notes:
1. Mill tolerance applies to all nominal pipe sizes listed below
2. For t < D/6 the internal pressure design thickness for straight pipe shall be not less than that calculated below
3. For t ≥ D/6 or for P/SE > 0.385 calculation of pressure design thickness for straight pipe required special consideration of factors such as theory of failure, effects of fatigue, and thermal stress
4. t_m = minimum required thickness, including mechanical, corrosion and erosion allowances
5. Codes and standards are the most recent at the time of Version

Preparer: Jones, Grace — Digitally signed by Jones, Grace DN: cn=Jones, Grace, ou=USDEN4 Date: 2016.09.17 13:30:09 -06'00'

Checker: Jason C. Jackson — Date: Digitally signed by Jason C. Jackson DN: cn=Jason C. Jackson, o=AECOM, ou=Piping, email=jason.jacksonenercon.com, c=US Date: 2017.05.10 15:10:39 -06'00'

NOMINAL OUTSIDE DIAMETER (IN.) (Threaded Ends)	OUTSIDE DIAMETER (IN.)	t (PD)/(2(SEW + Py))	D/6	t_m (t + C.A. / (1-Mill Tolerance))
0.50	0.840	0.0021	0.14	0.0744
0.75	1.050	0.0026	0.18	0.0730
1.00	1.315	0.0033	0.22	0.0757
1.50	1.900	0.0047	0.32	0.0774
2.00	2.375	0.0059	0.40	0.0788
2.50	2.875	0.0072	0.48	0.0862
3.00	3.500	0.0087	0.58	0.0820
4.00	4.500	0.0112	0.75	0.0840
6.00	6.625	0.0165	1.10	0.0809
8.00	8.625	0.0215	1.44	0.0960
10.00	10.750	0.0268	1.79	0.1027
12.00	12.750	0.0318	2.13	0.1084
14.00	14.000	0.0348	2.33	0.1119
16.00	16.000	0.0399	2.67	0.1176
18.00	18.000	0.0449	3.00	0.1233
20.00	20.000	0.0499	3.33	0.1290
24.00	24.000	0.0599	4.00	0.1404
28.00	28.000	0.0649	4.33	0.1461
26.00	26.000	0.0699	4.67	0.1518
30.00	30.000	0.0749	5.00	0.1575
32.00	32.000	0.0799	5.33	0.1632
34.00	34.000	0.0849	5.67	0.1689
36.00	36.000	0.0899	6.00	0.1747
38.00	38.000	0.0949	6.33	0.1804
40.00	40.000	0.0999	6.67	0.1861
42.00	42.000	0.1049	7.00	0.1918
44.00	44.000	0.1099	7.33	0.1975
46.00	46.000	0.1149	7.67	0.2033
48.00	48.000	0.1199	8.00	0.2089

PIPE SCHEDULES & CORRESPONDING NOMINAL WALL THICKNESSES (IN); PER ASME B36.10M AND ASME B36.19M

5S	10S	40S	80S	10	20	30	STD	40	60	XS	80	100	120	140	160	XXS
0.065	0.083	0.109	0.147	0.083	-	0.095	0.109	0.109	-	0.147	-	-	-	-	0.188	0.294
0.065	0.083	0.113	0.154	0.083	-	0.095	0.113	0.113	-	0.154	0.154	-	-	-	0.218	0.308
0.065	0.109	0.133	0.179	0.109	-	0.134	0.133	0.133	-	0.179	0.179	-	-	-	0.250	0.358
0.065	0.109	0.145	0.200	0.109	-	0.145	0.145	0.145	-	0.200	0.200	-	-	-	0.281	0.400
0.065	0.109	0.154	0.218	0.109	-	0.154	0.154	0.154	-	0.218	0.218	-	-	-	0.344	0.436
0.065	0.120	0.203	0.276	0.120	-	0.158	0.203	0.203	-	0.276	0.276	-	-	-	0.375	0.552
0.065	0.120	0.216	0.300	0.120	-	0.166	0.216	0.216	-	0.300	0.300	-	-	-	0.438	0.600
0.065	0.126	0.237	0.337	0.120	-	0.188	0.237	0.237	-	0.337	0.337	-	0.438	-	0.531	0.674
0.109	0.134	0.250	0.432	0.134	-	-	0.250	0.280	-	0.432	0.432	-	0.562	-	0.719	0.864
0.109	0.148	0.322	0.500	0.148	0.250	0.277	0.322	0.322	0.406	0.500	0.500	0.594	0.719	0.812	0.906	0.875
0.134	0.165	0.365	0.500	0.165	0.250	0.307	0.365	0.365	0.500	0.500	0.594	0.719	0.844	1.000	1.125	1.000
0.156	0.165	0.375	0.500	0.165	0.250	0.330	0.375	0.406	0.562	0.500	0.688	0.844	1.000	1.125	1.312	1.000
0.156	0.165	0.375	0.500	0.250	0.312	0.375	0.375	0.438	0.594	0.500	0.750	0.938	1.094	1.250	1.406	-
0.165	0.165	0.375	0.500	0.250	0.312	0.375	0.375	0.500	0.656	0.500	0.844	1.031	1.219	1.438	1.594	-
0.165	0.165	0.375	0.500	0.250	0.312	0.438	0.375	0.562	0.750	0.500	0.938	1.125	1.375	1.562	1.781	-
0.165	0.215	0.375	0.500	0.250	0.375	0.500	0.375	0.594	0.812	0.500	1.031	1.281	1.500	1.750	1.969	-
0.218	0.250	0.375	0.500	0.250	0.375	0.562	0.375	0.688	0.969	0.500	1.219	1.531	1.812	2.062	2.344	-
-	-	-	-	0.312	0.500	-	0.375	-	-	0.500	-	-	-	-	-	-
-	-	-	-	0.312	0.500	0.625	0.375	-	-	0.500	-	-	-	-	-	-
-	-	-	-	0.312	0.500	0.625	0.375	-	-	0.500	-	-	-	-	-	-
-	-	-	-	0.312	0.500	0.625	0.375	0.688	-	0.500	-	-	-	-	-	-
-	-	-	-	0.312	0.500	0.625	0.375	0.750	-	0.500	-	-	-	-	-	-
-	-	-	-	-	-	-	0.375	-	-	0.500	-	-	-	-	-	-
-	-	-	-	-	-	-	0.375	-	-	0.500	-	-	-	-	-	-
-	-	-	-	-	-	-	0.375	-	-	0.500	-	-	-	-	-	-
-	-	-	-	-	-	-	0.375	-	-	0.500	-	-	-	-	-	-
-	-	-	-	-	-	-	0.375	-	-	0.500	-	-	-	-	-	-
-	-	-	-	-	-	-	0.375	-	-	0.500	-	-	-	-	-	-

NOMINAL OUTSIDE DIAMETER (IN.) (Threaded Ends per ASME B1.20.1)	OUTSIDE DIAMETER (IN.)	t (PD)/(2(SEW + Py))	D/6	t_m (t + C.A. + Thread Depth / (1-Mill Tolerance))
0.50	0.840	0.0021	0.14	0.1397
0.75	1.050	0.0026	0.18	0.1403
1.00	1.315	0.0033	0.22	0.1453
1.50	1.900	0.0047	0.32	0.1569
2.00	2.375	0.0059	0.40	0.1653
2.50	2.875	0.0072	0.48	0.1845
3.00	3.500	0.0087	0.58	0.1883
4.00	4.500	0.0112	0.75	0.1981
6.00	6.625	0.0165	1.10	0.2053

PIPE SCHEDULES & CORRESPONDING NOMINAL WALL THICKNESSES (IN); PER ASME B36.10M AND ASME B36.19M
(Schedules highlighted in grey are not permitted for threaded pipe per ASME B31.3 Table 314.3.1)

5S	10S	40S	80S	10	20	30	STD	40	60	XS	80	100	120	140	160	XXS
-	-	0.109	0.147	-	-	-	-	-	-	0.147	0.147	-	-	-	0.188	0.294
-	-	0.113	0.154	-	-	-	-	-	-	0.154	0.154	-	-	-	0.218	0.308
-	-	0.133	0.179	-	-	-	-	-	-	0.179	0.179	-	-	-	0.250	0.358
-	-	0.145	0.200	-	-	-	-	-	-	0.200	0.200	-	-	-	0.281	0.400
-	-	0.154	0.218	-	-	-	0.134	0.154	-	0.218	0.218	-	-	-	0.344	0.436
-	-	0.203	0.276	-	-	-	0.203	0.203	-	0.276	0.276	-	-	-	0.375	0.552
-	-	0.216	0.300	-	-	-	0.216	0.216	-	0.300	0.300	-	-	-	0.438	0.600
-	-	0.237	0.337	-	-	-	0.237	0.237	-	0.337	0.337	-	0.438	-	0.531	0.674
-	-	0.250	0.432	-	-	-	0.250	0.280	-	0.432	0.432	-	0.562	-	0.719	0.864

ATTACHMENT 8.4 –EXCEL SPREADSHEET (VERSION 1.5); "MINIMUM REQUIRED WALL THICKNESS OF STRAIGHT PIPE UNDER INTERNAL PRESSURE, PER ASME B31.3" – PIPE LINE CLASS P4

Minimum Required Wall Thickness of Straight Pipe Under Internal Pressure, Per ASME B31.3
Version 1.5 (9/15/2016)

CALCULATION FILE	-
PROJECT NUMBER	31269
DATE	4/5/2017

MATERIAL SPEC	P4
MATERIAL TYPE	SMLS
MATERIAL DESIGNATION	A312 TP304-304L
P (INTERNAL DESIGN GAUGE PRESSURE (PSIG))	185
DESIGN TEMP. (DEG. F)	200
S (ALLOWABLE STRESS (PSI))	20000
E (QUALITY FACTOR)	1.00
W (WELD JOINT STRENGTH REDUCTION FACTOR)	1.00
C.A. (CORROSION ALLOWANCE)	0.063
Y COEFFICIENT	0.4
MILL TOLERANCE (%)	0.125

P/SE = 0.008

Notes:
1. Mill tolerance applies to all nominal pipe sizes listed below.
2. For t < D/6, the internal pressure design thickness for straight pipe shall be not less than that calculated below.
3. For t ≥ D/6 or for P/SE > 0.385, calculation of pressure design thickness for straight pipe required special consideration of factors such as theory of failure, effects of fatigue, and thermal stress.
4. t_m = minimum required thickness, including mechanical, corrosion and erosion allowances.
5. Codes and standards are the most recent at the time of validation.

Preparer:	Date:
Bailey, Rachel	Digitally signed by Bailey, Rachel DN: cn=Bailey, Rachel, ou=Users, Date: 2017.04.17 11:08:03 -08'00'
Checker:	**Date:**
Jason C. Jackson	Digitally signed by Jason C. Jackson DN: cn=Jason C. Jackson, o=AECOM, ou=Piping, email=jason.jackson@aecom.com, c=US Date: 2017.05.18 15:11:26 -06'00'

NOMINAL OUTSIDE DIAMETER (IN.) (Welded Ends)	OUTSIDE DIAMETER (IN.)	t (PDo / 2(SEW + Py))	D/6	t_m (t + C.A. / (1-Mill Tolerance))
0.50	0.840	0.0035	0.14	0.0756
0.75	1.050	0.0043	0.18	0.0788
1.00	1.315	0.0054	0.22	0.0852
1.50	1.900	0.0078	0.32	0.0909
2.00	2.375	0.0098	0.40	0.0932
2.50	2.875	0.0118	0.48	0.0955
3.00	3.500	0.0144	0.58	0.0983
4.00	4.500	0.0185	0.75	0.1031
6.00	6.625	0.0272	1.10	0.1131
8.00	8.625	0.0355	1.44	0.1225
10.00	10.750	0.0442	1.79	0.1325
12.00	12.750	0.0524	2.13	0.1419
14.00	14.000	0.0576	2.33	0.1476
16.00	16.000	0.0658	2.67	0.1572
18.00	18.000	0.0740	3.00	0.1668
20.00	20.000	0.0822	3.33	0.1765
24.00	24.000	0.0987	4.00	0.1958
26.00	26.000	0.1069	4.33	0.2054
28.00	28.000	0.1151	4.67	0.2036
30.00	30.000	0.1233	5.00	0.2130
32.00	32.000	0.1316	5.33	0.2224
34.00	34.000	0.1398	5.67	0.2318
36.00	36.000	0.1480	6.00	0.2412
38.00	38.000	0.1562	6.33	0.2506
40.00	40.000	0.1645	6.67	0.2600
42.00	42.000	0.1727	7.00	0.2693
44.00	44.000	0.1809	7.33	0.2787
46.00	46.000	0.1891	7.67	0.2881
48.00	48.000	0.1973	8.00	0.2975

PIPE SCHEDULES & CORRESPONDING NOMINAL WALL THICKNESSES (IN): PER ASME B36.10M AND ASME B36.19M

5S	10S	40S	80S	10	20	30	STD	40	60	XS	80	100	120	140	160	XXS
0.065	0.083	0.109	0.147	0.083	-	0.095	0.109	0.109	-	0.147	0.147	-	-	-	0.188	0.294
0.065	0.083	0.113	0.154	0.083	-	0.095	0.113	0.113	-	0.154	0.154	-	-	-	0.219	0.308
0.065	0.109	0.133	0.179	0.109	-	0.114	0.133	0.133	-	0.179	0.179	-	-	-	0.250	0.358
0.065	0.109	0.145	0.200	0.109	-	0.123	0.145	0.145	-	0.200	0.200	-	-	-	0.281	0.400
0.065	0.109	0.154	0.218	0.109	-	0.123	0.154	0.154	-	0.218	0.218	-	-	-	0.344	0.436
0.083	0.120	0.203	0.276	0.120	-	0.160	0.203	0.203	-	0.276	0.276	-	-	-	0.375	0.552
0.083	0.120	0.216	0.300	0.120	-	0.160	0.216	0.216	-	0.300	0.300	-	-	-	0.438	0.600
0.083	0.120	0.237	0.337	0.120	-	0.160	0.237	0.237	-	0.337	0.337	-	0.438	-	0.531	0.674
0.109	0.134	0.250	0.432	0.134	-		0.250	0.250	-	0.432	0.432	-	0.562	-	0.719	0.864
0.109	0.148	0.322	0.500	0.148	0.250	0.277	0.322	0.322	0.406	0.500	0.500	0.594	0.719	0.812	0.906	0.875
0.134	0.165	0.365	0.500	0.165	0.250	0.307	0.365	0.365	0.500	0.500	0.594	0.719	0.844	1.000	1.125	1.000
0.156	0.165	0.375	0.500	0.165	0.250	0.330	0.375	0.406	0.562	0.500	0.656	0.844	1.000	1.125	1.312	1.000
0.156	0.165	0.375	0.500	0.250	0.312	0.375	0.375	0.438	0.594	0.500	0.750	0.938	1.094	1.250	1.406	-
0.156	0.165	0.375	0.500	0.250	0.312	0.375	0.375	0.500	0.656	0.500	0.844	1.031	1.219	1.438	1.594	-
0.165	0.165	0.375	0.500	0.250	0.312	0.437	0.375	0.562	0.750	0.500	0.938	1.156	1.375	1.562	1.781	-
0.165	0.218	0.375	0.500	0.250	0.375	0.500	0.375	0.594	0.812	0.500	1.031	1.281	1.500	1.750	1.969	-
0.218	0.250	0.375	0.500	0.250	0.375	0.562	0.375	0.688	0.906	0.500	1.219	1.531	1.812	2.062	2.344	-
-	-	-	-	0.312	0.500	-	0.375	-	-	0.500	-	-	-	-	-	-
-	-	-	-	0.312	0.500	0.625	0.375	-	-	0.500	-	-	-	-	-	-
-	-	-	-	0.312	0.500	0.625	0.375	-	-	0.500	-	-	-	-	-	-
-	-	-	-	0.312	0.500	0.625	0.375	0.688	-	0.500	-	-	-	-	-	-
-	-	-	-	0.312	0.500	0.625	0.375	0.688	-	0.500	-	-	-	-	-	-
-	-	-	-	0.312	0.500	0.625	0.375	0.750	-	0.500	-	-	-	-	-	-
-	-	-	-	-	-	-	0.375	-	-	0.500	-	-	-	-	-	-
-	-	-	-	-	-	-	0.375	-	-	0.500	-	-	-	-	-	-
-	-	-	-	-	-	-	0.375	-	-	0.500	-	-	-	-	-	-
-	-	-	-	-	-	-	0.375	-	-	0.500	-	-	-	-	-	-
-	-	-	-	-	-	-	0.375	-	-	0.500	-	-	-	-	-	-
-	-	-	-	-	-	-	0.375	-	-	0.500	-	-	-	-	-	-
-	-	-	-	-	-	-	0.375	-	-	0.500	-	-	-	-	-	-

NOMINAL OUTSIDE DIAMETER (IN.) (Threaded Ends per ASME B1.20.1)	OUTSIDE DIAMETER (IN.)	t (PDo / 2(SEW + Py))	D/6	t_m (t + C.A. + Thread Depth / (1-Mill Tolerance))
0.50	0.840	0.0035	0.14	0.1473
0.75	1.050	0.0043	0.18	0.1422
1.00	1.315	0.0054	0.22	0.1377
1.50	1.900	0.0078	0.32	0.1804
2.00	2.375	0.0098	0.40	0.1837
2.50	2.875	0.0118	0.48	0.1886
3.00	3.500	0.0144	0.58	0.2027
4.00	4.500	0.0185	0.75	0.2074
6.00	6.625	0.0272	1.10	0.2174

PIPE SCHEDULES & CORRESPONDING NOMINAL WALL THICKNESSES (IN): PER ASME B36.10M AND ASME B36.19M
(Schedules highlighted in grey are not permitted for threaded pipe per ASME B31.3 Table 314.2.1)

5S	10S	40S	80S	10	20	30	STD	40	60	XS	80	100	120	140	160	XXS
-	-	0.109	0.147	-	-	-	-	-	-	0.147	0.147	-	-	-	0.188	0.294
-	-	0.113	0.154	-	-	-	-	-	-	0.154	0.154	-	-	-	0.219	0.308
-	-	0.133	0.179	-	-	-	-	-	-	0.179	0.179	-	-	-	0.250	0.358
-	-	0.145	0.200	-	-	-	-	-	-	0.200	0.200	-	-	-	0.281	0.400
-	-	0.154	0.218	-	-	-	0.154	0.154	-	0.218	0.218	-	-	-	0.344	0.436
-	-	0.203	0.276	-	-	-	0.203	0.203	-	0.276	0.276	-	-	-	0.375	0.552
-	-	0.216	0.300	-	-	-	0.216	0.216	-	0.300	0.300	-	-	-	0.438	0.600
-	-	0.237	0.337	-	-	-	0.237	0.237	-	0.337	0.337	-	0.438	-	0.531	0.674
-	-	0.250	0.432	-	-	-	0.250	0.250	-	0.432	0.432	-	0.562	-	0.719	0.864

ATTACHMENT 8.5 – EXCEL SPREADSHEET (VERSION 1.5); "MINIMUM REQUIRED WALL THICKNESS OF STRAIGHT PIPE UNDER INTERNAL PRESSURE, PER ASME B31.3" – PIPE LINE CLASS P5

Minimum Required Wall Thickness of Straight Pipe Under Internal Pressure, Per ASME B31.3
Version 1.5 (9/15/2016)

CALCULATION FILE	-
PROJECT NUMBER	31269
DATE	9/17/2016
MATERIAL SPEC	P5
MATERIAL TYPE	SMLS
MATERIAL DESIGNATION	A312 TP316/316L
P (INTERNAL DESIGN GAUGE PRESSURE (PSIG))	400
DESIGN TEMP. (DEG. F.)	200
S (ALLOWABLE STRESS (PSI))	20000
E (QUALITY FACTOR)	1.00
W (WELD JOINT STRENGTH REDUCTION FACTOR)	1.00
C.A. (CORROSION ALLOWANCE)	0.063
Y COEFFICIENT	0.4
MILL TOLERANCE (%)	0.125

P/SE = 0.020

Notes:
1. Mill tolerance applies to all nominal pipe sizes listed below
2. For t < D/6, the internal pressure design thickness for straight pipe shall be not less than that calculated below
3. For t ≥ D/6 or for P/SE > 0.385, calculation of pressure design thickness for straight pipe requires special consideration of factors such as theory of failure, effects of fatigue and thermal stress
4. t_m = minimum required thickness, including mechanical, corrosion and erosion allowances
5. Codes and standards are the most recent at the time of Revision.

Preparer: Jones, Grace — Digitally signed by Jones, Grace DN: cn=Jones, Grace, ou=USDEN4 Date: 2016.09.17 13:37:29 -06'00'

Checker: Jason C. Jackson — Date: Digitally signed by Jason C Jackson DN: cn=Jason C Jackson, o=AECOM, ou=Piping, email=jason.jackson@aecom.com, c=US Date: 2017.05.10 15:11:45 -06'00'

NOMINAL OUTSIDE DIAMETER (IN.) (Viewed Ends)	OUTSIDE DIAMETER (IN.)	t (PD) / (2(SE/W + Py))	D/6	t_m (1 + C.A.) / (1-Mill Tolerance)
0.50	0.840	0.0003	0.14	0.2615
0.75	1.050	0.0104	0.18	0.2619
1.00	1.315	0.0130	0.22	0.2669
1.50	1.900	0.0188	0.32	0.2830
2.00	2.375	0.0236	0.40	0.2929
2.50	2.875	0.0285	0.48	0.3029
3.00	3.500	0.0347	0.58	0.3146
4.00	4.500	0.0446	0.75	0.3346
6.00	6.625	0.0657	1.10	0.3771
8.00	8.625	0.0856	1.44	0.4196
10.00	10.750	0.1066	1.79	0.4639
12.00	12.750	0.1265	2.13	0.5086
14.00	14.000	0.1389	2.33	0.5307
16.00	16.000	0.1587	2.67	0.5734
18.00	18.000	0.1786	3.00	0.6161
20.00	20.000	0.1984	3.33	0.6588
24.00	24.000	0.2381	4.00	0.7441
26.00	26.000	0.2579	4.33	0.7868
28.00	28.000	0.2773	4.67	0.8295
30.00	30.000	0.2970	5.00	0.8721
32.00	32.000	0.3173	5.33	0.9148
34.00	34.000	0.3373	5.67	0.9575
36.00	36.000	0.3571	6.00	1.0002
38.00	38.000	0.3770	6.33	1.0428
40.00	40.000	0.3968	6.67	1.0855
42.00	42.000	0.4167	7.00	1.1282
44.00	44.000	0.4365	7.33	1.1709
46.00	46.000	0.4563	7.67	1.2135
48.00	48.000	0.4762	8.00	1.2562

PIPE SCHEDULES & CORRESPONDING NOMINAL WALL THICKNESSES (IN.) PER ASME B36.10M AND ASME B36.19M

5S	10S	40S	80S	10	20	30	STD	40	60	XS	80	100	120	140	160	XXS
0.065	0.083	0.109	0.147	0.083	-	0.095	0.109	0.109	-	0.147	0.147	-	-	-	0.188	0.294
0.065	0.083	0.113	0.154	0.083	-	0.095	0.113	0.113	-	0.154	0.154	-	-	-	0.219	0.308
0.065	0.109	0.133	0.179	0.109	-	0.134	0.133	0.133	-	0.179	0.179	-	-	-	0.250	0.358
0.065	0.109	0.145	0.200	0.109	-	0.138	0.145	0.145	-	0.200	0.200	-	-	-	0.281	0.400
0.083	0.109	0.154	0.218	0.109	-	0.148	0.154	0.154	-	0.218	0.218	-	-	-	0.344	0.436
0.083	0.120	0.203	0.276	0.120	-	0.165	0.203	0.203	-	0.276	0.276	-	-	-	0.375	0.552
0.083	0.120	0.216	0.300	0.120	-	0.165	0.216	0.216	-	0.300	0.300	-	-	-	0.438	0.600
0.083	0.120	0.237	0.337	0.120	-	0.165	0.237	0.237	-	0.337	0.337	-	0.438	-	0.531	0.674
0.109	0.134	0.280	0.432	0.134	-	-	0.280	0.280	-	0.432	0.432	-	0.562	-	0.719	0.864
0.109	0.148	0.322	0.500	0.148	0.250	0.277	0.322	0.322	0.406	0.500	0.500	0.594	0.719	0.812	0.906	0.875
0.134	0.165	0.365	0.500	0.165	0.250	0.307	0.365	0.365	0.500	0.500	0.594	0.719	0.844	1.000	1.125	1.000
0.156	0.180	0.375	0.500	0.180	0.250	0.330	0.375	0.406	0.562	0.500	0.688	0.844	1.000	1.125	1.312	1.000
0.156	0.188	0.375	0.500	0.250	0.312	0.375	0.375	0.438	0.594	0.500	0.750	0.938	1.094	1.250	1.406	-
0.165	0.188	0.375	0.500	0.250	0.312	0.375	0.375	0.500	0.656	0.500	0.844	1.031	1.219	1.438	1.594	-
0.165	0.198	0.375	0.500	0.250	0.312	0.438	0.375	0.562	0.750	0.500	0.938	1.156	1.375	1.562	1.781	-
0.165	0.218	0.375	0.500	0.250	0.375	0.500	0.375	0.594	0.812	0.500	1.031	1.281	1.500	1.750	1.969	-
0.218	0.258	0.375	0.500	0.250	0.375	0.562	0.375	0.688	0.969	0.500	1.219	1.531	1.812	2.062	2.344	-
-	-	-	-	0.312	0.500	-	0.375	-	-	0.500	-	-	-	-	-	-
-	-	-	-	0.312	0.500	0.625	0.375	-	-	0.500	-	-	-	-	-	-
-	-	-	-	0.312	0.500	0.625	0.375	-	-	0.500	-	-	-	-	-	-
-	-	-	-	0.312	0.500	0.625	0.375	0.865	-	0.500	-	-	-	-	-	-
-	-	-	-	0.312	0.500	0.625	0.375	0.906	-	0.500	-	-	-	-	-	-
-	-	-	-	0.312	0.500	0.625	0.375	0.750	-	0.500	-	-	-	-	-	-
-	-	-	-	-	-	-	0.375	-	-	0.500	-	-	-	-	-	-
-	-	-	-	-	-	-	0.375	-	-	0.500	-	-	-	-	-	-
-	-	-	-	-	-	-	0.375	-	-	0.500	-	-	-	-	-	-
-	-	-	-	-	-	-	0.375	-	-	0.500	-	-	-	-	-	-
-	-	-	-	-	-	-	0.375	-	-	0.500	-	-	-	-	-	-
-	-	-	-	-	-	-	0.375	-	-	0.500	-	-	-	-	-	-
-	-	-	-	-	-	-	0.375	-	-	0.500	-	-	-	-	-	-

NOMINAL OUTSIDE DIAMETER (IN.) (Threaded Ends per ASME B1.20.1)	OUTSIDE DIAMETER (IN.)	t (PD) / (2(SE/W + Py))	D/6	t_m (1 + C.A. + Thread Depth) / (1-Mill Tolerance)
0.50	0.840	0.0003	0.14	0.1460
0.75	1.050	0.0104	0.18	0.1482
1.00	1.315	0.0130	0.22	0.1664
1.50	1.900	0.0188	0.32	0.1730
2.00	2.375	0.0236	0.40	0.1794
2.50	2.875	0.0285	0.48	0.2188
3.00	3.500	0.0347	0.58	0.2260
4.00	4.500	0.0446	0.75	0.2373
6.00	6.625	0.0657	1.10	0.2614

PIPE SCHEDULES & CORRESPONDING NOMINAL WALL THICKNESSES (IN.) PER ASME B36.10M AND ASME B36.19M
(Schedules highlighted in grey are not permitted for threaded pipe per ASME B31.3 Table 314.2.1)

5S	10S	40S	80S	10	20	30	STD	40	60	XS	80	100	120	140	160	XXS
-	-	0.109	0.147	-	-	-	-	-	-	0.147	0.147	-	-	-	0.188	0.294
-	-	0.113	0.154	-	-	-	-	-	-	0.154	0.154	-	-	-	0.219	0.308
-	-	0.133	0.179	-	-	-	-	-	-	0.179	0.179	-	-	-	0.250	0.358
-	-	0.145	0.200	-	-	-	-	-	-	0.200	0.200	-	-	-	0.281	0.400
-	-	0.154	0.218	-	-	-	0.154	0.154	-	0.218	0.218	-	-	-	0.344	0.436
-	-	0.203	0.276	-	-	-	0.203	0.203	-	0.276	0.276	-	-	-	0.375	0.552
-	-	0.216	0.300	-	-	-	0.216	0.216	-	0.300	0.300	-	-	-	0.438	0.600
-	-	0.237	0.337	-	-	-	0.237	0.237	-	0.337	0.337	-	0.438	-	0.531	0.674
-	-	0.250	0.432	-	-	-	0.280	0.280	-	0.432	0.432	-	0.562	-	0.719	0.864

ATTACHMENT 8.6 –EXCEL SPREADSHEET (VERSION 1.5); "MINIMUM REQUIRED WALL THICKNESS OF STRAIGHT PIPE UNDER INTERNAL PRESSURE, PER ASME B31.3" – PIPE LINE CLASS P7

Minimum Required Wall Thickness of Straight Pipe Under Internal Pressure, Per ASME B31.3
Version 1.5 (9/15/2016)

CALCULATION FILE:	
PROJECT NUMBER:	31269
DATE:	9/17/2016

MATERIAL SPEC	P7
MATERIAL TYPE:	316L S
MATERIAL DESIGNATION	A312 TP316/316L
P (INTERNAL DESIGN GAUGE PRESSURE (PSIG)):	730
DESIGN TEMP. (DEG. F):	100
S (ALLOWABLE STRESS (PSI)):	20000
E (QUALITY FACTOR):	1.00
W (WELD JOINT STRENGTH REDUCTION FACTOR):	1.00
C.A. (CORROSION ALLOWANCE):	0.063
Y COEFFICIENT:	0.4
MILL TOLERANCE (%):	0.125

P/SE = 0.036

Notes:

1. Mill tolerance applies to all nominal pipe sizes listed below
2. For t < D/6, the internal pressure design thickness for straight pipe shall be not less than that calculated below
3. For t ≥ D/6 or for P/SE > 0.385, calculation of pressure design thickness for straight pipe requires special consideration of factors such as theory of failure, effects of fatigue, and thermal stress.
4. t_m = minimum required thickness, including mechanical, corrosion and erosion allowances.
5. Codes and standards are the most recent at the time of Version.

Preparer: Jones, Grace — Digitally signed by Jones, Grace DN: cn=Jones, Grace, o=USDEN4 Date: 2016.09.17 13:40:02 -06'00'

Checker: Jason C. Jackson — Digitally signed by Jason C. Jackson DN: cn=Jason C. Jackson, o=AECOM, ou=Piping, email=jason.jackson@aecom.com, c=US Date: 2017.03.10 13:28:49-06'00'

NOMINAL OUTSIDE DIAMETER (IN.) (Welded Ends)	OUTSIDE DIAMETER (IN.)	t (PD) / (2(SE/W + PY))	D/6	t_m (t + C.A.) / (1-Mill Tolerance)
0.50	0.840	0.0149	0.14	0.0680
0.75	1.050	0.0186	0.18	0.0933
1.00	1.315	0.0233	0.22	0.0867
1.50	1.900	0.0337	0.32	0.1125
2.00	2.375	0.0421	0.40	0.1202
2.50	2.875	0.0510	0.48	0.1300
3.00	3.500	0.0621	0.58	0.1430
4.00	4.500	0.0798	0.75	0.1033
6.00	6.625	0.1175	1.10	0.2084
8.00	8.625	0.1530	1.44	0.2469
10.00	10.750	0.1908	1.79	0.2900
12.00	12.750	0.2262	2.13	0.3305
14.00	14.000	0.2484	2.33	0.3599
16.00	16.000	0.2839	2.67	0.3983
18.00	18.000	0.3194	3.00	0.4370
20.00	20.000	0.3549	3.33	0.4776
24.00	24.000	0.4258	4.00	0.5597
26.00	26.000	0.4614	4.33	0.6013
28.00	28.000	0.4960	4.67	0.6380
30.00	30.000	0.5323	5.00	0.6504
32.00	32.000	0.5678	5.33	0.7209
34.00	34.000	0.6033	5.67	0.7615
36.00	36.000	0.6388	6.00	0.8021
38.00	38.000	0.6743	6.33	0.8428
40.00	40.000	0.7098	6.67	0.8832
42.00	42.000	0.7453	7.00	0.9237
44.00	44.000	0.7808	7.33	0.9643
46.00	46.000	0.8163	7.67	1.0049
48.00	48.000	0.8517	8.00	1.0454

PIPE SCHEDULES & CORRESPONDING NOMINAL WALL THICKNESSES (IN.) PER ASME B36.10M AND ASME B36.19M

5S	10S	40S	80S	10	20	30	STD	40	60	XS	80	100	120	140	160	XXS
0.065	0.083	0.109	0.147	0.083	-	0.095	0.109	0.109	-	0.147	0.147	-	-	-	0.188	0.294
0.065	0.083	0.113	0.154	0.083	-	0.095	0.113	0.113	-	0.154	0.154	-	-	-	0.219	0.308
0.065	0.109	0.133	0.179	0.109	-	0.114	0.133	0.133	-	0.179	0.179	-	-	-	0.250	0.358
0.065	0.109	0.145	0.200	0.109	-	0.125	0.145	0.145	-	0.200	0.200	-	-	-	0.281	0.400
0.065	0.109	0.154	0.218	0.109	-	0.125	0.154	0.154	-	0.218	0.218	-	-	-	0.344	0.436
0.083	0.120	0.203	0.276	0.120	-	0.188	0.203	0.203	-	0.276	0.276	-	-	-	0.375	0.552
0.083	0.120	0.216	0.300	0.120	-	0.188	0.216	0.216	-	0.300	0.300	-	-	-	0.438	0.600
0.083	0.120	0.237	0.337	0.120	-	0.188	0.237	0.237	-	0.337	0.337	-	0.438	-	0.531	0.674
0.109	0.134	0.280	0.432	0.134	-	-	0.280	0.280	-	0.432	0.432	-	0.562	-	0.719	0.864
0.109	0.148	0.322	0.500	0.148	0.250	0.277	0.322	0.322	0.406	0.500	0.500	0.594	0.719	0.812	0.906	0.875
0.134	0.165	0.365	0.500	0.165	0.250	0.307	0.365	0.365	0.500	0.500	0.594	0.719	0.844	1.000	1.125	1.000
0.156	0.180	0.375	0.500	0.180	0.250	0.330	0.375	0.406	0.562	0.500	0.688	0.844	1.000	1.125	1.312	1.000
0.156	0.188	0.375	0.500	0.250	0.312	0.375	0.375	0.438	0.594	0.500	0.750	0.938	1.094	1.250	1.406	-
0.188	0.218	0.375	0.500	0.250	0.312	0.375	0.375	0.500	0.656	0.500	0.844	1.031	1.219	1.438	1.594	-
0.188	0.218	0.375	0.500	0.250	0.375	0.500	0.375	0.562	0.750	0.500	0.938	1.156	1.375	1.562	1.781	-
0.218	0.250	0.375	0.500	0.250	0.375	0.562	0.375	0.688	0.906	0.500	1.094	1.281	1.500	1.750	1.969	-
-	-	-	-	0.312	0.500	-	0.375	-	-	0.500	-	-	-	-	-	-
-	-	-	-	0.312	0.500	0.625	0.375	-	-	0.500	-	-	-	-	-	-
-	-	-	-	0.312	0.500	0.625	0.375	0.688	-	0.500	-	-	-	-	-	-
-	-	-	-	0.312	0.500	0.625	0.375	0.800	-	0.500	-	-	-	-	-	-
-	-	-	-	0.312	0.500	0.625	0.375	0.750	-	0.500	-	-	-	-	-	-
-	-	-	-	-	-	-	0.375	-	-	0.500	-	-	-	-	-	-
-	-	-	-	-	-	-	0.375	-	-	0.500	-	-	-	-	-	-
-	-	-	-	-	-	-	0.375	-	-	0.500	-	-	-	-	-	-
-	-	-	-	-	-	-	0.375	-	-	0.500	-	-	-	-	-	-
-	-	-	-	-	-	-	0.375	-	-	0.500	-	-	-	-	-	-
-	-	-	-	-	-	-	0.375	-	-	0.500	-	-	-	-	-	-

NOMINAL OUTSIDE DIAMETER (IN.) (Threaded Ends per ASME B1.20.1)	OUTSIDE DIAMETER (IN.)	t (PD) / (2(SE/W + PY))	D/6	t_m (t + C.A. + Thread Depth) / (1-Mill Tolerance)
0.50	0.840	0.0149	0.14	0.1543
0.75	1.050	0.0186	0.18	0.1588
1.00	1.315	0.0233	0.22	0.1752
1.50	1.900	0.0337	0.32	0.1900
2.00	2.375	0.0421	0.40	0.1897
2.50	2.875	0.0510	0.48	0.2448
3.00	3.500	0.0621	0.58	0.2873
4.00	4.500	0.0798	0.75	0.2779
6.00	6.625	0.1175	1.10	0.3206

PIPE SCHEDULES & CORRESPONDING NOMINAL WALL THICKNESSES (IN.) PER ASME B36.10M AND ASME B36.19M
(Schedules highlighted in gray are not permitted for threaded pipe per ASME B31.3 Table 314.2.1)

5S	10S	40S	80S	10	20	30	STD	40	60	XS	80	100	120	140	160	XXS
-	-	0.109	0.147	-	-	-	-	-	-	0.147	0.147	-	-	-	0.188	0.294
-	-	0.113	0.154	-	-	-	-	-	-	0.154	0.154	-	-	-	0.219	0.308
-	-	0.133	0.179	-	-	-	-	-	-	0.179	0.179	-	-	-	0.250	0.358
-	-	0.145	0.200	-	-	-	-	-	-	0.200	0.200	-	-	-	0.281	0.400
-	-	0.154	0.218	-	-	-	0.154	0.154	-	0.218	0.218	-	-	-	0.344	0.436
-	-	0.203	0.276	-	-	-	0.203	0.203	-	0.276	0.276	-	-	-	0.375	0.552
-	-	0.216	0.300	-	-	-	0.216	0.216	-	0.300	0.300	-	-	-	0.438	0.600
-	-	0.237	0.337	-	-	-	0.237	0.237	-	0.337	0.337	-	0.438	-	0.531	0.674
-	-	0.280	0.432	-	-	-	0.280	0.280	-	0.432	0.432	-	0.562	-	0.719	0.864

ATTACHMENT 8.7 – EXCEL SPREADSHEET (VERSION 1.5); "MINIMUM REQUIRED WALL THICKNESS OF STRAIGHT PIPE UNDER INTERNAL PRESSURE, PER ASME B31.3" – PIPE LINE CLASS P9

Minimum Required Wall Thickness of Straight Pipe Under Internal Pressure, Per ASME B31.3
Version 1.5 (9/15/2016)

CALCULATION FILE	-
PROJECT NUMBER	31269
DATE	9/17/2016

MATERIAL SPEC	P9
MATERIAL TYPE	SMLS
MATERIAL DESIGNATION	A312 TP304/304L
P (INTERNAL DESIGN GAUGE PRESSURE (PSIG))	150
DESIGN TEMP (DEG F)	200
S (ALLOWABLE STRESS (PSI))	20000
E (QUALITY FACTOR)	1.00
W (WELD JOINT STRENGTH REDUCTION FACTOR)	1.00
C.A. (CORROSION ALLOWANCE)	0.063
Y COEFFICIENT	0.4
MILL TOLERANCE (%)	0.125

P/SE = 0.005

Notes:
1. Mill tolerance applies to all nominal pipe sizes listed below.
2. For t < D/6, the internal pressure design thickness for straight pipe shall be not less than that calculated below.
3. For t ≥ D/6 or for P/SE > 0.385, calculation of pressure design thickness for straight pipe requires special consideration of factors such as theory of failure, effects of fatigue, and thermal stress.
4. t_m = minimum required thickness, including mechanical, corrosion and erosion allowances.
5. Codes and standards are the most recent at the time of Version.

Preparer: Jones, Grace — Digitally signed by Jones, Grace; DN: cn=Jones, Grace, ou=USDEN4; Date: 2016.09.17 13:43:23 -06'00'

Checker: Jason C. Jackson — Date: Digitally signed by Jason C. Jackson; DN: cn=Jason C. Jackson, o=AECOM, ou=Fulong, email=jason.jackson@aecom.com, c=US; Date: 2017.05.16 15:20:46 -06'00'

NOMINAL OUTSIDE DIAMETER (IN.) (Welded Ends)	OUTSIDE DIAMETER (IN.)	t = (PD) / (2(SE/W + PY))	D/6	t_m = (t + C.A.) / (1 - Mill Tolerance)
0.50	0.840	0.0021	0.14	0.0744
0.75	1.050	0.0026	0.18	0.0790
1.00	1.315	0.0033	0.22	0.0757
1.50	1.900	0.0047	0.32	0.0774
2.00	2.375	0.0058	0.40	0.0750
2.50	2.875	0.0072	0.48	0.0802
3.00	3.500	0.0087	0.58	0.0828
4.00	4.500	0.0112	0.75	0.0848
6.00	6.625	0.0165	1.10	0.0909
8.00	8.625	0.0215	1.44	0.0986
10.00	10.750	0.0268	1.79	0.1037
12.00	12.750	0.0318	2.12	0.1084
14.00	14.000	0.0349	2.33	0.1118
16.00	16.000	0.0399	2.67	0.1176
18.00	18.000	0.0449	3.00	0.1233
20.00	20.000	0.0499	3.33	0.1290
24.00	24.000	0.0599	4.00	0.1404
26.00	26.000	0.0649	4.33	0.1461
28.00	28.000	0.0699	4.67	0.1518
30.00	30.000	0.0749	5.00	0.1575
32.00	32.000	0.0799	5.33	0.1632
34.00	34.000	0.0849	5.67	0.1689
36.00	36.000	0.0899	6.00	0.1747
38.00	38.000	0.0949	6.33	0.1804
40.00	40.000	0.0999	6.67	0.1861
42.00	42.000	0.1049	7.00	0.1918
44.00	44.000	0.1099	7.33	0.1975
46.00	46.000	0.1149	7.67	0.2032
48.00	48.000	0.1199	8.00	0.2089

PIPE SCHEDULES & CORRESPONDING NOMINAL WALL THICKNESSES (IN.) PER ASME B36.10M AND ASME B36.19M

5S	10S	40S	80S	10	20	30	STD	40	60	XS	80	100	120	140	160	XXS
0.065	0.083	0.109	0.147	0.083	-	0.095	0.109	0.109	-	0.147	0.147	-	-	-	0.188	0.294
0.065	0.083	0.113	0.154	0.083	-	0.095	0.113	0.113	-	0.154	0.154	-	-	-	0.219	0.308
0.065	0.109	0.133	0.179	0.109	-	0.114	0.133	0.133	-	0.179	0.179	-	-	-	0.250	0.358
0.065	0.109	0.145	0.200	0.109	-	0.129	0.145	0.145	-	0.200	0.200	-	-	-	0.281	0.400
0.065	0.109	0.154	0.218	0.109	-	0.123	0.154	0.154	-	0.218	0.218	-	-	-	0.344	0.436
0.083	0.120	0.203	0.276	0.120	-	0.164	0.203	0.203	-	0.276	0.276	-	-	-	0.375	0.552
0.083	0.120	0.216	0.300	0.120	-	0.183	0.216	0.216	-	0.300	0.300	-	-	-	0.438	0.600
0.083	0.120	0.237	0.337	0.120	-	0.100	0.237	0.237	-	0.337	0.337	-	0.438	-	0.531	0.674
0.109	0.134	0.250	0.432	0.134	-	-	0.250	0.250		0.432	0.432		0.562	-	0.719	0.864
0.109	0.148	0.322	0.500	0.148	0.250	0.277	0.322	0.322	0.406	0.500	0.500	0.594	0.719	0.812	0.906	0.875
0.134	0.165	0.365	0.500	0.165	0.250	0.307	0.365	0.365	0.500	0.500	0.594	0.719	0.844	1.000	1.125	1.000
0.156	0.180	0.375	0.500	0.180	0.250	0.330	0.375	0.406	0.562	0.500	0.688	0.844	1.000	1.125	1.312	1.000
0.156	0.188	0.375	0.500	0.250	0.312	0.375	0.375	0.438	0.594	0.500	0.750	0.938	1.094	1.250	1.406	
0.165	0.188	0.375	0.500	0.250	0.312	0.375	0.375	0.500	0.656	0.500	0.844	1.031	1.219	1.438	1.594	-
0.165	0.188	0.375	0.500	0.250	0.312	0.438	0.375	0.562	0.750	0.500	0.938	1.156	1.375	1.562	1.781	-
0.180	0.218	0.375	0.500	0.250	0.375	0.500	0.375	0.594	0.812	0.500	1.031	1.281	1.500	1.750	1.969	-
0.218	0.250	0.375	0.562	0.250	0.375	0.562	0.375	0.656	0.969	0.500	1.219	1.531	1.812	2.062	2.344	
-	-	-	-	0.312	0.500	-	0.375	-	-	0.500	-	-	-	-	-	-
		-	-	0.312	0.500	0.625	0.375			0.500	-	-			-	
-	-	-	-	0.312	0.500	0.625	0.375	-	-	0.500	-	-	-	-	-	-
-		-	-	0.312	0.500	0.625	0.375	0.688	-	0.500	-	-			-	
	-	-	-	0.312	0.500	0.625	0.375	0.812	-	0.500		-	-	-	-	
-	-	-	-	-	-	-	0.375	-	-	0.500	-	-	-	-	-	-
-	-	-		-	-	-	0.375	-	-	0.500	-	-			-	
-	-	-	-	-	-	-	0.375	-	-	0.500	-	-	-	-	-	-
-	-	-	-	-	-	-	0.375	-	-	0.500	-	-	-	-	-	-
-	-	-	-	-	-	-	0.375	-	-	0.500	-	-	-	-	-	-
-	-	-	-	-	-	-	0.375	-	-	0.500	-	-	-	-	-	-

NOMINAL OUTSIDE DIAMETER (IN.) (Threaded Ends per ASME B1.20.1)	OUTSIDE DIAMETER (IN.)	t = (PD) / (2(SE/W + PY))	D/6	t_m = (t + C.A. + Thread Depth) / (1 - Mill Tolerance)
0.50	0.840	0.0021	0.14	0.1357
0.75	1.050	0.0026	0.18	0.1409
1.00	1.315	0.0033	0.22	0.1353
1.50	1.900	0.0047	0.32	0.1369
2.00	2.375	0.0059	0.40	0.1323
2.50	2.875	0.0072	0.48	0.1343
3.00	3.500	0.0087	0.58	0.1363
4.00	4.500	0.0112	0.75	0.1381
6.00	6.625	0.0165	1.10	0.2052

PIPE SCHEDULES & CORRESPONDING NOMINAL WALL THICKNESSES (IN.) PER ASME B36.10M AND ASME B36.19M
(Schedules highlighted in grey are not permitted for threaded pipe per ASME B31.3 Table 314.2.1)

5S	10S	40S	80S	10	20	30	STD	40	60	XS	80	100	120	140	160	XXS
-	-	0.109	0.147	-	-	-	-	-	-	0.147	0.147	-	-	-	0.188	0.294
-	-	0.113	0.154	-	-	-	-	-	-	0.154	0.154	-	-	-	0.219	0.308
-	-	0.133	0.179	-	-	-	-	-	-	0.179	0.179	-	-	-	0.250	0.358
-	-	0.145	0.200	-	-	-	-	-	-	0.200	0.200	-	-	-	0.281	0.400
-	-	0.154	0.218	-	-	-	0.154	0.154	-	0.218	0.218	-	-	-	0.344	0.436
-	-	0.203	0.276	-	-	-	0.203	0.203	-	0.276	0.276	-	-	-	0.375	0.552
-	-	0.216	0.300	-	-	-	0.216	0.216	-	0.300	0.300	-	-	-	0.438	0.600
-	-	0.237	0.337	-	-	-	0.237	0.237	-	0.337	0.337	-	0.438	-	0.531	0.674
-	-	0.250	0.433	-	-	-	0.250	0.250	-	0.432	0.432	-	0.562	-	0.719	0.864

ATTACHMENT 8.7 – EXCEL SPREADSHEET (VERSION 1.4); "MINIMUM REQUIRED WALL THICKNESS OF STRAIGHT PIPE UNDER INTERNAL PRESSURE, PER ASME B31.3" – PIPE LINE CLASS P9

Minimum Required Wall Thickness of Straight Pipe Under Internal Pressure, Per ASME B31.3
Version 1.5 (9/19/2016)

CALCULATION FILE	-
PROJECT NUMBER	31269
DATE	8/17/2016

MATERIAL SPEC	P9
MATERIAL TYPE	ERW (100% XRAY)
MATERIAL DESIGNATION	A312 TP304/304L
P (INTERNAL DESIGN GAUGE PRESSURE (PSIG))	150
DESIGN TEMP. (DEG. F)	300
S (ALLOWABLE STRESS (PSI))	20000
E (QUALITY FACTOR)	1.00
W (WELD JOINT STRENGTH REDUCTION FACTOR)	1.00
C.A. (CORROSION ALLOWANCE)	0.063
Y COEFFICIENT	0.4
MILL TOLERANCE (%)	0.125

P/SE = 0.005

Notes:
1. Mill tolerance applies to all nominal pipe sizes listed below
2. For t < D/6, the internal pressure design thickness for straight pipe shall be not less than that calculated below
3. For t ≥ D/6 or for P/SE > 0.385, calculation of pressure design thickness for straight pipe requires special consideration of factors such as theory of failure, effects of fatigue, and thermal stress
4. t_m = minimum required thickness, including mechanical, corrosion and erosion allowances
5. Codes and standards are the most recent at the time of Variation

Preparer: Jones, Grace — Digitally signed by Jones, Grace DN: cn=Jones, Grace, o=USDEN4 Date: 2016.09.17 13:50:19 -06'00'

Checker: Jason C. Jackson — Date: Digitally signed by Jason C. Jackson DN: cn=Jason C. Jackson, o=AECOM, ou=Piping, email=jason.jackson@aecom.com, c=US Date: 2017.10.10 13:28:09 -06'00'

NOMINAL OUTSIDE DIAMETER (IN.) (Welded Ends)	OUTSIDE DIAMETER (IN.)	t (PD) / (SEW + PY)	D/6	t_m = t + C.A. / (1-Mill Tolerance)
0.50	0.840	0.0021	0.14	0.0744
0.75	1.050	0.0026	0.18	0.0730
1.00	1.315	0.0033	0.22	0.0757
1.50	1.900	0.0047	0.32	0.0774
2.00	2.375	0.0059	0.40	0.0790
2.50	2.875	0.0072	0.48	0.0802
3.00	3.500	0.0087	0.58	0.0820
4.00	4.500	0.0112	0.75	0.0843
6.00	6.625	0.0165	1.10	0.0909
8.00	8.625	0.0215	1.44	0.0966
10.00	10.750	0.0268	1.79	0.1027
12.00	12.750	0.0318	2.13	0.1084
14.00	14.000	0.0349	2.33	0.1119
16.00	16.000	0.0399	2.67	0.1176
18.00	18.000	0.0449	3.00	0.1233
20.00	20.000	0.0499	3.33	0.1290
24.00	24.000	0.0599	4.00	0.1404
26.00	26.000	0.0649	4.33	0.1461
28.00	28.000	0.0699	4.67	0.1518
30.00	30.000	0.0749	5.00	0.1575
32.00	32.000	0.0798	5.33	0.1632
34.00	34.000	0.0848	5.67	0.1689
36.00	36.000	0.0898	6.00	0.1747
38.00	38.000	0.0948	6.33	0.1804
40.00	40.000	0.0998	6.67	0.1861
42.00	42.000	0.1048	7.00	0.1918
44.00	44.000	0.1098	7.33	0.1975
46.00	46.000	0.1148	7.67	0.2032
48.00	48.000	0.1198	8.00	0.2089

PIPE SCHEDULES & CORRESPONDING NOMINAL WALL THICKNESSES (IN.) PER ASME B36.10M AND ASME B36.19M

5S	10S	40S	80S	10	20	30	STD	40	60	XS	80	100	120	140	160	XXS
0.065	0.083	0.109	0.147	0.083	-	0.095	0.109	0.113	-	0.147	0.147	-	-	-	0.188	0.294
0.065	0.083	0.113	0.154	0.083	-	0.095	0.113	0.113	-	0.154	0.154	-	-	-	0.218	0.308
0.065	0.109	0.133	0.179	0.109	-	0.114	0.133	0.133	-	0.179	0.179	-	-	-	0.250	0.358
0.065	0.109	0.145	0.200	0.109	-	0.125	0.145	0.145	-	0.200	0.200	-	-	-	0.281	0.400
0.065	0.109	0.154	0.218	0.109	-	0.125	0.154	0.154	-	0.218	0.218	-	-	-	0.344	0.436
0.065	0.120	0.203	0.276	0.120	-	0.156	0.203	0.203	-	0.276	0.276	-	-	-	0.375	0.552
0.065	0.120	0.216	0.300	0.120	-	0.188	0.216	0.216	-	0.300	0.300	-	-	-	0.438	0.600
0.065	0.120	0.237	0.337	0.120	-	0.188	0.237	0.237	-	0.337	0.337	-	0.438	-	0.531	0.674
0.109	0.134	0.280	0.432	0.134	-	-	0.280	0.280	-	0.432	0.432	-	0.562	-	0.719	0.864
0.109	0.148	0.322	0.500	0.148	0.230	0.277	0.322	0.322	0.406	0.500	0.500	0.594	0.718	0.812	0.906	0.979
0.134	0.165	0.365	0.500	0.165	0.250	0.307	0.365	0.365	0.500	0.500	0.594	0.718	0.844	1.000	1.125	1.000
0.156	0.165	0.375	0.500	0.165	0.250	0.330	0.375	0.406	0.562	0.500	0.688	0.844	1.000	1.125	1.312	1.000
0.156	0.165	0.375	0.500	0.230	0.312	0.375	0.375	0.438	0.594	0.500	0.750	0.938	1.094	1.250	1.406	-
0.165	0.165	0.375	0.500	0.250	0.312	0.375	0.375	0.500	0.656	0.500	0.844	1.031	1.219	1.438	1.594	-
0.165	0.165	0.375	0.500	0.250	0.312	0.438	0.375	0.562	0.750	0.500	0.938	1.156	1.375	1.562	1.781	-
0.165	0.215	0.375	0.500	0.250	0.375	0.500	0.375	0.594	0.812	0.500	1.031	1.281	1.500	1.750	1.969	-
0.218	0.250	0.375	0.500	0.250	0.375	0.562	0.375	0.656	0.869	0.500	1.219	1.531	1.812	2.062	2.344	-
-	-	-	-	0.312	0.500	-	0.375	-	-	0.500	-	-	-	-	-	-
-	-	-	-	0.312	0.500	0.625	0.375	-	-	0.500	-	-	-	-	-	-
-	-	-	-	0.312	0.500	0.625	0.375	0.688	-	0.500	-	-	-	-	-	-
-	-	-	-	0.312	0.500	0.625	0.375	0.688	-	0.500	-	-	-	-	-	-
-	-	-	-	0.312	0.500	0.625	0.375	0.750	-	0.500	-	-	-	-	-	-
-	-	-	-	-	-	-	0.375	-	-	0.500	-	-	-	-	-	-
-	-	-	-	-	-	-	0.375	-	-	0.500	-	-	-	-	-	-
-	-	-	-	-	-	-	0.375	-	-	0.500	-	-	-	-	-	-
-	-	-	-	-	-	-	0.375	-	-	0.500	-	-	-	-	-	-
-	-	-	-	-	-	-	0.375	-	-	0.500	-	-	-	-	-	-
-	-	-	-	-	-	-	0.375	-	-	0.500	-	-	-	-	-	-

NOMINAL OUTSIDE DIAMETER (IN.) (Threaded Ends per ASME B1.20.1)	OUTSIDE DIAMETER (IN.)	t (PD) / (SEW + PY)	D/6	t_m = t + C.A. + Thread Depth / (1-Mill Tolerance)
0.50	0.840	0.0021	0.14	0.1387
0.75	1.050	0.0026	0.18	0.1403
1.00	1.315	0.0033	0.22	0.1553
1.50	1.900	0.0047	0.32	0.1588
2.00	2.375	0.0059	0.40	0.1663
2.50	2.875	0.0072	0.48	0.1948
3.00	3.500	0.0087	0.58	0.1963
4.00	4.500	0.0112	0.75	0.1981
6.00	6.625	0.0165	1.10	0.2032

PIPE SCHEDULES & CORRESPONDING NOMINAL WALL THICKNESSES (IN.), PER ASME B36.10M AND ASME B36.19M
(Schedules highlighted in grey are not permitted for threaded pipe per ASME B31.3 Table 314.2.1)

5S	10S	40S	80S	10	20	30	STD	40	60	XS	80	100	120	140	160	XXS
-	-	0.109	0.147	-	-	-	-	-	-	0.147	0.147	-	-	-	0.188	0.294
-	-	0.113	0.154	-	-	-	-	-	-	0.154	0.154	-	-	-	0.219	0.308
-	-	0.133	0.179	-	-	-	-	-	-	0.179	0.179	-	-	-	0.250	0.358
-	-	0.143	0.200	-	-	-	-	-	-	0.200	0.200	-	-	-	0.281	0.400
-	-	0.154	0.218	-	-	-	0.154	0.154	-	0.218	0.218	-	-	-	0.344	0.436
-	-	0.203	0.203	-	-	-	0.203	0.203	-	0.276	0.276	-	-	-	0.375	0.552
-	-	0.216	0.216	-	-	-	0.216	0.216	-	0.300	0.300	-	-	-	0.438	0.600
-	-	0.237	0.237	-	-	-	0.237	0.237	-	0.337	0.337	-	0.438	-	0.531	0.674
-	-	0.280	0.432	-	-	-	0.280	0.280	-	0.432	0.432	-	0.562	-	0.719	0.864

ATTACHMENT 8.8 – MANUAL MINIMUM WALL THICKNESS CALCULATION PER ASME B31.3 – PIPE LINE CLASS P12

PIPE WALL THICKNESS CALCULATION PER ASME B31.3 "STRAIGHT PIPE UNDER INTERNAL PRESSURE"

CODE	ASME B31.3	OTHER	-	CALC. NO.	-
MATERIAL	TP316L	ASTM	A269	PREPARED BY:	Jones, Grace
GRADE	-	CLASS	-		Digitally signed by Jones, Grace DN: cn=Jones, Grace, ou=USDEN4 Date: 2016.09.17 14:01:13 -06'00'
SEAMLESS	-	WELDED (W)	1.00		
PRESSURE (P)	400	TEMP.	200°F	CHECKED BY:	Jason C. Jackson
STRESS (S)	16700	FACTOR (y)	0.4		Digitally signed by Jason C. Jackson DN: cn=Jason C. Jackson, o=AECOM, ou=Piping, email=jason.jackson@aecom.com, c=US Date: 2017.05.16 152931 -06'00'
BASED ON	1.00 LONG, JT. FACTOR (E)				
CORROSION ALLOWANCE (C)	0.0000	MILL TOLERANCE (M) %	0.150		

$t_m = \frac{P}{2(SEW+Py)} \times D + C / (1 - M)$ $\quad k = \frac{P}{2(SEW+Py)} = \frac{400}{33720} = 0.011862$

k	x	D	=		+	C	=		/	(1-M)	t_m		NOMINAL SIZE
0.011862	x	0.25	=	0.0030	+	0.000	=	0.0030	/	0.850	= 0.0035		1/4
											T= 0.035"	SCH:	N/A
0.011862	x	0.38	=	0.0044	+	0.000	=	0.0044	/	0.850	= 0.0052		3/8
											T= 0.035"	SCH:	N/A
0.011862	x	0.50	=	0.0059	+	0.000	=	0.0059	/	0.850	= 0.0070		1/2
											T= 0.049"	SCH:	N/A

t_m = MINIMUM REQUIRED THICKNESS

D = OUTSIDE DIAMETER IN INCHES

T = SELECTED WALL THICKNESS

k = CALCULATED CONSTANT

M = MILL TOLERANCE = (PER ASTM SPEC)

ATTACHMENT 8.9 – MANUAL MINIMUM WALL THICKNESS CALCULATION PER ASME B31.3 FOR STRAIGHT PIPE UNDER EXTERNAL PRESSURE – PIPE LINE CLASS P7

Piping Material Class P7	2" NPS	3" NPS
D_o	2.375"	3.5"
t	(0.154") * (1-0.125) – 0.063" = 0.072"	(0.216") * (1-.125) – 0.063" = 0.126"
L	10 ft. = 120 in	10 ft. = 120 in
P	55 psig	55 psig
D_o / t	32.9	27.8
L / D_o	50.5	34.3
A	0.00106	0.00146
B	9772	10979
$P_a = \frac{4B}{3*(\frac{Do}{t})}$	396.03 psig	526.57 psig
P_a > P ?	TRUE	TRUE

Prepared By:

Bailey, Rachel

Digitally signed by Bailey, Rachel
DN: cn=Bailey, Rachel, ou=Users
Date: 2017.05.10 12:42:20 -06'00'

Checked by:

Jason C. Jackson

Digitally signed by Jason C. Jackson
DN: cn=Jason C. Jackson, o=AECOM, ou=Piping, email=jason.jackson@aecom.com, c=US
Date: 2017.05.10 15:28:56 -06'00'

ATTACHMENT 8.10–MACRO AND FORMULA PRINT OUT OF EXCEL SPREADSHEET VERSION (1.0); "WALL THICKNESS PRIOR TO BENDING, PER ASME B31.3 (2012) AND PFI ES-24 (2013) SECTION 7" – PIPE LINE CLASS P5

Wall Thickness Prior to Bending, Per ASME B31.3 (2012) Para. 304.2.1 and PFI ES-24 (1998) Section 7

CALCULATION FILE:	LAWPS
PROJECT NUMBER:	31269
DATE:	42366
MATERIAL SPEC:	P5
MATERIAL TYPE:	SMLS
MATERIAL DESIGNATION:	A312 TP316/316L
DESIGN PRESSURE (PSIG):	400
DESIGN TEMP. (DEG. F):	200
S:ALLOWABLE STRESS (PSI):	20000
E: (QUALITY FACTOR)	1
W: (WELD JOINT STENGTH)	1
CORROSION ALLOWANCE:	0.063
Y COEFFICENT:	0.4
MILL TOLERANCE (%):	12.5
RADIUS OF BEND: (D)	3

Notes/Assumptions:
1. Worst case fabrication methods per radius of bend from PFI ES-24 (1998) Section 7 were used to calculate minimum wall thickness prior to bending.
2. Standard bend radiuses per PFI ES-24 only. No interpolation available.
3. Mill tolerance applies to all sizes listed below.

NOMINAL DIAMETER	ACTUAL DIAMETER	INTRADOS OF BEND	EXTRADOS OF BEND	CENTERLINE OF BEND	MIN. WT @ INTRADOS	MIN WT @ EXTRADOS
0.5	0.84	=(($B$18*B22/B22)-1)/(($B$18*B22/B22)-2)	=(($B$18*B22/B22)+1)/(($B$18*B22/B22)+2)	1	=(($B$10*B22)/(2*(($B$12*$B$13*$B$14)/(C22)+($B$10*$B$16)))+$B$15)/(100-$B$17)*0.01))	=(($B$10*B22)/(2*(($B$12*$B$13*$B$14)/(D22)+($B$10*$B$16)))+$B$15)/(100-$B$17)*0.01))
0.75	1.05	=(($B$18*B23/B23)-1)/(($B$18*B23/B23)-2)	=(($B$18*B23/B23)+1)/(($B$18*B23/B23)+2)	1	=(($B$10*B23)/(2*(($B$12*$B$13*$B$14)/(C23)+($B$10*$B$16)))+$B$15)/(100-$B$17)*0.01))	=(($B$10*B23)/(2*(($B$12*$B$13*$B$14)/(D23)+($B$10*$B$16)))+$B$15)/(100-$B$17)*0.01))
1	1.315	=(($B$18*B24/B24)-1)/(($B$18*B24/B24)-2)	=(($B$18*B24/B24)+1)/(($B$18*B24/B24)+2)	1	=(($B$10*B24)/(2*(($B$12*$B$13*$B$14)/(C24)+($B$10*$B$16)))+$B$15)/(100-$B$17)*0.01))	=(($B$10*B24)/(2*(($B$12*$B$13*$B$14)/(D24)+($B$10*$B$16)))+$B$15)/(100-$B$17)*0.01))
1.5	1.9	=(($B$18*B25/B25)-1)/(($B$18*B25/B25)-2)	=(($B$18*B25/B25)+1)/(($B$18*B25/B25)+2)	1	=(($B$10*B25)/(2*(($B$12*$B$13*$B$14)/(C25)+($B$10*$B$16)))+$B$15)/(100-$B$17)*0.01))	=(($B$10*B25)/(2*(($B$12*$B$13*$B$14)/(D25)+($B$10*$B$16)))+$B$15)/(100-$B$17)*0.01))
2	2.375	=(($B$18*B26/B26)-1)/(($B$18*B26/B26)-2)	=(($B$18*B26/B26)+1)/(($B$18*B26/B26)+2)	1	=(($B$10*B26)/(2*(($B$12*$B$13*$B$14)/(C26)+($B$10*$B$16)))+$B$15)/(100-$B$17)*0.01))	=(($B$10*B26)/(2*(($B$12*$B$13*$B$14)/(D26)+($B$10*$B$16)))+$B$15)/(100-$B$17)*0.01))
2.5	2.875	=(($B$18*B27/B27)-1)/(($B$18*B27/B27)-2)	=(($B$18*B27/B27)+1)/(($B$18*B27/B27)+2)	1	=(($B$10*B27)/(2*(($B$12*$B$13*$B$14)/(C27)+($B$10*$B$16)))+$B$15)/(100-$B$17)*0.01))	=(($B$10*B27)/(2*(($B$12*$B$13*$B$14)/(D27)+($B$10*$B$16)))+$B$15)/(100-$B$17)*0.01))
3	3.5	=(($B$18*B28/B28)-1)/(($B$18*B28/B28)-2)	=(($B$18*B28/B28)+1)/(($B$18*B28/B28)+2)	1	=(($B$10*B28)/(2*(($B$12*$B$13*$B$14)/(C28)+($B$10*$B$16)))+$B$15)/(100-$B$17)*0.01))	=(($B$10*B28)/(2*(($B$12*$B$13*$B$14)/(D28)+($B$10*$B$16)))+$B$15)/(100-$B$17)*0.01))
4	4.5	=(($B$18*B29/B29)-1)/(($B$18*B29/B29)-2)	=(($B$18*B29/B29)+1)/(($B$18*B29/B29)+2)	1	=(($B$10*B29)/(2*(($B$12*$B$13*$B$14)/(C29)+($B$10*$B$16)))+$B$15)/(100-$B$17)*0.01))	=(($B$10*B29)/(2*(($B$12*$B$13*$B$14)/(D29)+($B$10*$B$16)))+$B$15)/(100-$B$17)*0.01))
6	6.625	=(($B$18*B30/B30)-1)/(($B$18*B30/B30)-2)	=(($B$18*B30/B30)+1)/(($B$18*B30/B30)+2)	1	=(($B$10*B30)/(2*(($B$12*$B$13*$B$14)/(C30)+($B$10*$B$16)))+$B$15)/(100-$B$17)*0.01))	=(($B$10*B30)/(2*(($B$12*$B$13*$B$14)/(D30)+($B$10*$B$16)))+$B$15)/(100-$B$17)*0.01))
8	8.625	=(($B$18*B31/B31)-1)/(($B$18*B31/B31)-2)	=(($B$18*B31/B31)+1)/(($B$18*B31/B31)+2)	1	=(($B$10*B31)/(2*(($B$12*$B$13*$B$14)/(C31)+($B$10*$B$16)))+$B$15)/(100-$B$17)*0.01))	=(($B$10*B31)/(2*(($B$12*$B$13*$B$14)/(D31)+($B$10*$B$16)))+$B$15)/(100-$B$17)*0.01))
10	10.75	=(($B$18*B32/B32)-1)/(($B$18*B32/B32)-2)	=(($B$18*B32/B32)+1)/(($B$18*B32/B32)+2)	1	=(($B$10*B32)/(2*(($B$12*$B$13*$B$14)/(C32)+($B$10*$B$16)))+$B$15)/(100-$B$17)*0.01))	=(($B$10*B32)/(2*(($B$12*$B$13*$B$14)/(D32)+($B$10*$B$16)))+$B$15)/(100-$B$17)*0.01))
12	12.75	=(($B$18*B33/B33)-1)/(($B$18*B33/B33)-2)	=(($B$18*B33/B33)+1)/(($B$18*B33/B33)+2)	1	=(($B$10*B33)/(2*(($B$12*$B$13*$B$14)/(C33)+($B$10*$B$16)))+$B$15)/(100-$B$17)*0.01))	=(($B$10*B33)/(2*(($B$12*$B$13*$B$14)/(D33)+($B$10*$B$16)))+$B$15)/(100-$B$17)*0.01))
14	14	=(($B$18*B34/B34)-1)/(($B$18*B34/B34)-2)	=(($B$18*B34/B34)+1)/(($B$18*B34/B34)+2)	1	=(($B$10*B34)/(2*(($B$12*$B$13*$B$14)/(C34)+($B$10*$B$16)))+$B$15)/(100-$B$17)*0.01))	=(($B$10*B34)/(2*(($B$12*$B$13*$B$14)/(D34)+($B$10*$B$16)))+$B$15)/(100-$B$17)*0.01))
16	16	=(($B$18*B35/B35)-1)/(($B$18*B35/B35)-2)	=(($B$18*B35/B35)+1)/(($B$18*B35/B35)+2)	1	=(($B$10*B35)/(2*(($B$12*$B$13*$B$14)/(C35)+($B$10*$B$16)))+$B$15)/(100-$B$17)*0.01))	=(($B$10*B35)/(2*(($B$12*$B$13*$B$14)/(D35)+($B$10*$B$16)))+$B$15)/(100-$B$17)*0.01))
18	18	=(($B$18*B36/B36)-1)/(($B$18*B36/B36)-2)	=(($B$18*B36/B36)+1)/(($B$18*B36/B36)+2)	1	=(($B$10*B36)/(2*(($B$12*$B$13*$B$14)/(C36)+($B$10*$B$16)))+$B$15)/(100-$B$17)*0.01))	=(($B$10*B36)/(2*(($B$12*$B$13*$B$14)/(D36)+($B$10*$B$16)))+$B$15)/(100-$B$17)*0.01))
20	20	=(($B$18*B37/B37)-1)/(($B$18*B37/B37)-2)	=(($B$18*B37/B37)+1)/(($B$18*B37/B37)+2)	1	=(($B$10*B37)/(2*(($B$12*$B$13*$B$14)/(C37)+($B$10*$B$16)))+$B$15)/(100-$B$17)*0.01))	=(($B$10*B37)/(2*(($B$12*$B$13*$B$14)/(D37)+($B$10*$B$16)))+$B$15)/(100-$B$17)*0.01))
24	24	=(($B$18*B38/B38)-1)/(($B$18*B38/B38)-2)	=(($B$18*B38/B38)+1)/(($B$18*B38/B38)+2)	1	=(($B$10*B38)/(2*(($B$12*$B$13*$B$14)/(C38)+($B$10*$B$16)))+$B$15)/(100-$B$17)*0.01))	=(($B$10*B38)/(2*(($B$12*$B$13*$B$14)/(D38)+($B$10*$B$16)))+$B$15)/(100-$B$17)*0.01))
26	26	=(($B$18*B39/B39)-1)/(($B$18*B39/B39)-2)	=(($B$18*B39/B39)+1)/(($B$18*B39/B39)+2)	1	=(($B$10*B39)/(2*(($B$12*$B$13*$B$14)/(C39)+($B$10*$B$16)))+$B$15)/(100-$B$17)*0.01))	=(($B$10*B39)/(2*(($B$12*$B$13*$B$14)/(D39)+($B$10*$B$16)))+$B$15)/(100-$B$17)*0.01))
28	28	=(($B$18*B40/B40)-1)/(($B$18*B40/B40)-2)	=(($B$18*B40/B40)+1)/(($B$18*B40/B40)+2)	1	=(($B$10*B40)/(2*(($B$12*$B$13*$B$14)/(C40)+($B$10*$B$16)))+$B$15)/(100-$B$17)*0.01))	=(($B$10*B40)/(2*(($B$12*$B$13*$B$14)/(D40)+($B$10*$B$16)))+$B$15)/(100-$B$17)*0.01))
30	30	=(($B$18*B41/B41)-1)/(($B$18*B41/B41)-2)	=(($B$18*B41/B41)+1)/(($B$18*B41/B41)+2)	1	=(($B$10*B41)/(2*(($B$12*$B$13*$B$14)/(C41)+($B$10*$B$16)))+$B$15)/(100-$B$17)*0.01))	=(($B$10*B41)/(2*(($B$12*$B$13*$B$14)/(D41)+($B$10*$B$16)))+$B$15)/(100-$B$17)*0.01))
32	32	=(($B$18*B42/B42)-1)/(($B$18*B42/B42)-2)	=(($B$18*B42/B42)+1)/(($B$18*B42/B42)+2)	1	=(($B$10*B42)/(2*(($B$12*$B$13*$B$14)/(C42)+($B$10*$B$16)))+$B$15)/(100-$B$17)*0.01))	=(($B$10*B42)/(2*(($B$12*$B$13*$B$14)/(D42)+($B$10*$B$16)))+$B$15)/(100-$B$17)*0.01))
34	34	=(($B$18*B43/B43)-1)/(($B$18*B43/B43)-2)	=(($B$18*B43/B43)+1)/(($B$18*B43/B43)+2)	1	=(($B$10*B43)/(2*(($B$12*$B$13*$B$14)/(C43)+($B$10*$B$16)))+$B$15)/(100-$B$17)*0.01))	=(($B$10*B43)/(2*(($B$12*$B$13*$B$14)/(D43)+($B$10*$B$16)))+$B$15)/(100-$B$17)*0.01))
36	36	=(($B$18*B44/B44)-1)/(($B$18*B44/B44)-2)	=(($B$18*B44/B44)+1)/(($B$18*B44/B44)+2)	1	=(($B$10*B44)/(2*(($B$12*$B$13*$B$14)/(C44)+($B$10*$B$16)))+$B$15)/(100-$B$17)*0.01))	=(($B$10*B44)/(2*(($B$12*$B$13*$B$14)/(D44)+($B$10*$B$16)))+$B$15)/(100-$B$17)*0.01))
40	40	=(($B$18*B45/B45)-1)/(($B$18*B45/B45)-2)	=(($B$18*B45/B45)+1)/(($B$18*B45/B45)+2)	1	=(($B$10*B45)/(2*(($B$12*$B$13*$B$14)/(C45)+($B$10*$B$16)))+$B$15)/(100-$B$17)*0.01))	=(($B$10*B45)/(2*(($B$12*$B$13*$B$14)/(D45)+($B$10*$B$16)))+$B$15)/(100-$B$17)*0.01))
42	42	=(($B$18*B46/B46)-1)/(($B$18*B46/B46)-2)	=(($B$18*B46/B46)+1)/(($B$18*B46/B46)+2)	1	=(($B$10*B46)/(2*(($B$12*$B$13*$B$14)/(C46)+($B$10*$B$16)))+$B$15)/(100-$B$17)*0.01))	=(($B$10*B46)/(2*(($B$12*$B$13*$B$14)/(D46)+($B$10*$B$16)))+$B$15)/(100-$B$17)*0.01))
48	48	=(($B$18*B47/B47)-1)/(($B$18*B47/B47)-2)	=(($B$18*B47/B47)+1)/(($B$18*B47/B47)+2)	1	=(($B$10*B47)/(2*(($B$12*$B$13*$B$14)/(C47)+($B$10*$B$16)))+$B$15)/(100-$B$17)*0.01))	=(($B$10*B47)/(2*(($B$12*$B$13*$B$14)/(D47)+($B$10*$B$16)))+$B$15)/(100-$B$17)*0.01))

ASME B31.3 | PFI ES-24 Tables

ATTACHMENT 8.10–MACRO AND FORMULA PRINT OUT OF EXCEL SPREADSHEET VERSION (1.0); "WALL THICKNESS PRIOR TO BENDING, PER ASME B31.3 (2012) AND PFI ES-24 (2013) SECTION 7" – PIPE LINE CLASS P5

	H	I
21	MIN. WT @ CENTERLINE	MIN. WT PRIOR TO BENDING
22	=(((($B$10*B22)/(2*(((($B$12*$B$13*$B$14)/E22)+($B$10*$B$16)))+$B$15)/((100-$B$17)*0.01))	=(MAX(F22:H22))*(VLOOKUP($B$18,'PFI ES-24 Tables'!$A$15:$B$20,2,FALSE))
23	=(((($B$10*B23)/(2*(((($B$12*$B$13*$B$14)/E23)+($B$10*$B$16)))+$B$15)/((100-$B$17)*0.01))	=(MAX(F23:H23))*(VLOOKUP($B$18,'PFI ES-24 Tables'!$A$15:$B$20,2,FALSE))
24	=(((($B$10*B24)/(2*(((($B$12*$B$13*$B$14)/E24)+($B$10*$B$16)))+$B$15)/((100-$B$17)*0.01))	=(MAX(F24:H24))*(VLOOKUP($B$18,'PFI ES-24 Tables'!$A$15:$B$20,2,FALSE))
25	=(((($B$10*B25)/(2*(((($B$12*$B$13*$B$14)/E25)+($B$10*$B$16)))+$B$15)/((100-$B$17)*0.01))	=(MAX(F25:H25))*(VLOOKUP($B$18,'PFI ES-24 Tables'!$A$15:$B$20,2,FALSE))
26	=(((($B$10*B26)/(2*(((($B$12*$B$13*$B$14)/E26)+($B$10*$B$16)))+$B$15)/((100-$B$17)*0.01))	=(MAX(F26:H26))*(VLOOKUP($B$18,'PFI ES-24 Tables'!$A$15:$B$20,2,FALSE))
27	=(((($B$10*B27)/(2*(((($B$12*$B$13*$B$14)/E27)+($B$10*$B$16)))+$B$15)/((100-$B$17)*0.01))	=(MAX(F27:H27))*(VLOOKUP($B$18,'PFI ES-24 Tables'!$A$15:$B$20,2,FALSE))
28	=(((($B$10*B28)/(2*(((($B$12*$B$13*$B$14)/E28)+($B$10*$B$16)))+$B$15)/((100-$B$17)*0.01))	=(MAX(F28:H28))*(VLOOKUP($B$18,'PFI ES-24 Tables'!$A$15:$B$20,2,FALSE))
29	=(((($B$10*B29)/(2*(((($B$12*$B$13*$B$14)/E29)+($B$10*$B$16)))+$B$15)/((100-$B$17)*0.01))	=(MAX(F29:H29))*(VLOOKUP($B$18,'PFI ES-24 Tables'!$A$15:$B$20,2,FALSE))
30	=(((($B$10*B30)/(2*(((($B$12*$B$13*$B$14)/E30)+($B$10*$B$16)))+$B$15)/((100-$B$17)*0.01))	=(MAX(F30:H30))*(VLOOKUP($B$18,'PFI ES-24 Tables'!$A$15:$B$20,2,FALSE))
31	=(((($B$10*B31)/(2*(((($B$12*$B$13*$B$14)/E31)+($B$10*$B$16)))+$B$15)/((100-$B$17)*0.01))	=(MAX(F31:H31))*(VLOOKUP($B$18,'PFI ES-24 Tables'!$A$15:$B$20,2,FALSE))
32	=(((($B$10*B32)/(2*(((($B$12*$B$13*$B$14)/E32)+($B$10*$B$16)))+$B$15)/((100-$B$17)*0.01))	=(MAX(F32:H32))*(VLOOKUP($B$18,'PFI ES-24 Tables'!$A$15:$B$20,2,FALSE))
33	=(((($B$10*B33)/(2*(((($B$12*$B$13*$B$14)/E33)+($B$10*$B$16)))+$B$15)/((100-$B$17)*0.01))	=(MAX(F33:H33))*(VLOOKUP($B$18,'PFI ES-24 Tables'!$A$15:$B$20,2,FALSE))
34	=(((($B$10*B34)/(2*(((($B$12*$B$13*$B$14)/E34)+($B$10*$B$16)))+$B$15)/((100-$B$17)*0.01))	=(MAX(F34:H34))*(VLOOKUP($B$18,'PFI ES-24 Tables'!$A$15:$B$20,2,FALSE))
35	=(((($B$10*B35)/(2*(((($B$12*$B$13*$B$14)/E35)+($B$10*$B$16)))+$B$15)/((100-$B$17)*0.01))	=(MAX(F35:H35))*(VLOOKUP($B$18,'PFI ES-24 Tables'!$A$15:$B$20,2,FALSE))
36	=(((($B$10*B36)/(2*(((($B$12*$B$13*$B$14)/E36)+($B$10*$B$16)))+$B$15)/((100-$B$17)*0.01))	=(MAX(F36:H36))*(VLOOKUP($B$18,'PFI ES-24 Tables'!$A$15:$B$20,2,FALSE))
37	=(((($B$10*B37)/(2*(((($B$12*$B$13*$B$14)/E37)+($B$10*$B$16)))+$B$15)/((100-$B$17)*0.01))	=(MAX(F37:H37))*(VLOOKUP($B$18,'PFI ES-24 Tables'!$A$15:$B$20,2,FALSE))
38	=(((($B$10*B38)/(2*(((($B$12*$B$13*$B$14)/E38)+($B$10*$B$16)))+$B$15)/((100-$B$17)*0.01))	=(MAX(F38:H38))*(VLOOKUP($B$18,'PFI ES-24 Tables'!$A$15:$B$20,2,FALSE))
39	=(((($B$10*B39)/(2*(((($B$12*$B$13*$B$14)/E39)+($B$10*$B$16)))+$B$15)/((100-$B$17)*0.01))	=(MAX(F39:H39))*(VLOOKUP($B$18,'PFI ES-24 Tables'!$A$15:$B$20,2,FALSE))
40	=(((($B$10*B40)/(2*(((($B$12*$B$13*$B$14)/E40)+($B$10*$B$16)))+$B$15)/((100-$B$17)*0.01))	=(MAX(F40:H40))*(VLOOKUP($B$18,'PFI ES-24 Tables'!$A$15:$B$20,2,FALSE))
41	=(((($B$10*B41)/(2*(((($B$12*$B$13*$B$14)/E41)+($B$10*$B$16)))+$B$15)/((100-$B$17)*0.01))	=(MAX(F41:H41))*(VLOOKUP($B$18,'PFI ES-24 Tables'!$A$15:$B$20,2,FALSE))
42	=(((($B$10*B42)/(2*(((($B$12*$B$13*$B$14)/E42)+($B$10*$B$16)))+$B$15)/((100-$B$17)*0.01))	=(MAX(F42:H42))*(VLOOKUP($B$18,'PFI ES-24 Tables'!$A$15:$B$20,2,FALSE))
43	=(((($B$10*B43)/(2*(((($B$12*$B$13*$B$14)/E43)+($B$10*$B$16)))+$B$15)/((100-$B$17)*0.01))	=(MAX(F43:H43))*(VLOOKUP($B$18,'PFI ES-24 Tables'!$A$15:$B$20,2,FALSE))
44	=(((($B$10*B44)/(2*(((($B$12*$B$13*$B$14)/E44)+($B$10*$B$16)))+$B$15)/((100-$B$17)*0.01))	=(MAX(F44:H44))*(VLOOKUP($B$18,'PFI ES-24 Tables'!$A$15:$B$20,2,FALSE))
45	=(((($B$10*B45)/(2*(((($B$12*$B$13*$B$14)/E45)+($B$10*$B$16)))+$B$15)/((100-$B$17)*0.01))	=(MAX(F45:H45))*(VLOOKUP($B$18,'PFI ES-24 Tables'!$A$15:$B$20,2,FALSE))
46	=(((($B$10*B46)/(2*(((($B$12*$B$13*$B$14)/E46)+($B$10*$B$16)))+$B$15)/((100-$B$17)*0.01))	=(MAX(F46:H46))*(VLOOKUP($B$18,'PFI ES-24 Tables'!$A$15:$B$20,2,FALSE))
47	=(((($B$10*B47)/(2*(((($B$12*$B$13*$B$14)/E47)+($B$10*$B$16)))+$B$15)/((100-$B$17)*0.01))	=(MAX(F47:H47))*(VLOOKUP($B$18,'PFI ES-24 Tables'!$A$15:$B$20,2,FALSE))

ASME B31.3 | PFI ES-24 Tables

Minimum Thickness Prior to Bending Tables per PFI ES-24 (2013), Section 7

TABLE 7.2.1
FURNACE BENDING

BEND RADIUS * D	MIN. WT PRIOR TO BENDING * t_{min}
6	1.06
5	1.08
4	1.14
3	1.25

TABLE 7.2.2
INDUCTION AND INCREMENTAL BENDING

BEND RADIUS * D	MIN. WT PRIOR TO BENDING * t_{min}
6	1.06
5	1.08
4	1.1
3	1.14
2	1.22
1.5	1.3

TABLE 7.2.3
ROTARY DRAW BENDING

BEND RADIUS * D	MIN. WT PRIOR TO BENDING * t_{min}
6	1.09
5	1.14
4	1.2
3	1.28

TABLE 7.2.4
RAM AND ROLL BENDING

BEND RADIUS * D	MIN. WT PRIOR TO BENDING * t_{min}
6	1.08
5	1.1
4	1.13
3	1.17

BEND RADIUS * D	MAX FACTOR * tmin
6	1.09
5	1.14
4	1.2
3	1.28
2	1.22
1.5	1.3

ASME B31.3 PFI ES-24 Tables

ATTACHMENT 8.11 – MANUAL MINIMUM WALL THICKNESS CALCULATION PER ASME B31.3 FOR PIPE BENDS – PIPE LINE CLASS P5

Piping Material Class P5	
P	400 psi
D	3.5 in.
S	20000 psi
R_1	3D
E	1.0
W	1.0
Y	0.4
Inside Bend Radius (Intrados)	$I = \frac{4\left(\frac{R1}{D}\right)-1}{4\left(\frac{R1}{D}\right)-2} = \frac{4\left(\frac{3*3.5}{3.5}\right)-1}{4\left(\frac{3*3.5}{3.5}\right)-2} = 1.1$
Outside Bend Radius (Extrados)	$I = \frac{4\left(\frac{R1}{D}\right)+1}{4\left(\frac{R1}{D}\right)+2} = \frac{4\left(\frac{3*3.5}{3.5}\right)+1}{4\left(\frac{3*3.5}{3.5}\right)+2} = 0.93$
Centerline Bend Radius	1.0

Min. Thickness @ Inside Bend Radius (Intrados)

$$tmin = t + c = \frac{PD}{2\left(\left(\frac{SEW}{I}\right)+PY\right)} + c = \frac{\frac{400*3.5}{2\left(\left(\frac{20000*1*1}{1.1}\right)+400*0.4\right)}+0.063}{0.875} = 0.116 \text{ in.}$$

Min. Thickness @ Outside Bend Radius (Extrados)

$$tmin = t + c = \frac{PD}{2\left(\left(\frac{SEW}{I}\right)+PY\right)} + c = \frac{\frac{400*3.5}{2\left(\left(\frac{20000*1*1}{0.93}\right)+400*0.4\right)}+0.063}{0.875} = 0.109 \text{ in.}$$

Min. Thickness @ Centerline Bend Radius

$$tmin = t + c = \frac{PD}{2\left(\left(\frac{SEW}{I}\right)+PY\right)} + c = \frac{\frac{400*3.5}{2\left(\left(\frac{20000*1*1}{1.0}\right)+400*0.4\right)}+0.063}{0.875} = 0.112 \text{ in.}$$

Min. Wall Thickness Prior to Bending

$$tmin = \max(tmin\ @\ bend) * \max(\text{material tolerance per PFI ES} - 24)$$

$$tmin = 0.116 * 1.28 = 0.148 \text{ in.}$$

Prepared By: Bailey, Rachel

Digitally signed by Bailey, Rachel
DN: cn=Bailey, Rachel, ou=Users
Date: 2017.05.10 12:42:37 -06'00'

Checked By: Jason C. Jackson

Digitally signed by Jason C. Jackson
DN: cn=Jason C. Jackson, o=AECOM, ou=Piping, email=jason.jackson@aecom.com, c=US
Date: 2017.05.10 15:29:25 -06'00'

ATTACHMENT 8.12 – MINIMUM WALL THICKNESS EXCEL SPREADSHEET (VERSION 1.0); "WALL THICKNESS PRIOR TO BENDING, PER ASME B31.3 (2012) AND PFI ES-24 (2013) SECTION 7" – PIPE LINE CLASS P5

CALCULATION FILE:	-
PROJECT NUMBER:	31269
DATE:	9/17/2016
MATERIAL SPEC.	P5
MATERIAL TYPE:	SMLS
MATERIAL DESIGNATION:	A312 TP316/316L
DESIGN PRESSURE (PSIG):	400
DESIGN TEMP. (DEG. F):	200
S:ALLOWABLE STRESS (PSI):	20000
E. (QUALITY FACTOR)	1.00
W: (WELD JOINT STENGTH)	1.00
CORROSION ALLOWANCE:	0.083
Y COEFFICIENT:	0.4
MILL TOLERANCE (%):	12.5
RADIUS OF BEND. (D)	5.0

Notes/Assumptions.
1. Worst case fabrication methods per radius of bend from PFI ES-24 (2013) Section 7 were used to calculate minimum wall thickness prior to bending.
2. Standard bend radiuses per PFI ES-24 only. No interpolation available.
3. Mill tolerance applies to all sizes listed below.

Preparer: Jones, Grace — Date: Digitally signed by Jones, Grace DN: cn=Jones, Grace ou=USDEBH Date: 2016.09.26 14:44:12 -05'00'

Checker: Jason C. Jackson — Date: Digitally signed by Jason C Jackson DN: cn=Jason C. Jackson, o=AECOM, ou=Piping, email=jason.jackson@aecom.com, c=US Date: 2017.05.18 15:29:54 -05'00'

PIPE SCHEDULES & CORRESPONDING NOMINAL WALL THICKNESSES (IN), PER ASME B36.10M (2004) AND ASME B36.19M (2004)

NOMINAL DIAMETER	ACTUAL DIAMETER	INTRADOS OF BEND	EXTRADOS OF BEND	CENTERLINE OF BEND	MIN. WT @ INTRADOS	MIN WT @ EXTRADOS	MIN. WT @ CENTERLINE	MIN. WT PRIOR TO BENDING	5S	10S	40S	80S	10	20	30	STD	40	60	XS	80	100	120	140	160	XXS
0.50	0.840	1.056	0.955	1.000	0.0820	0.0811	0.0815	0.0935	0.065	0.083	0.109	0.147	0.083	-	0.095	0.109	0.109	-	0.147	0.147	-	-	-	0.188	0.294
0.75	1.050	1.056	0.955	1.000	0.0846	0.0834	0.0839	0.0964	0.065	0.083	0.113	0.154	0.083	-	0.095	0.113	0.113	-	0.154	0.154	-	-	-	0.219	0.308
1.00	1.315	1.056	0.955	1.000	0.0877	0.0862	0.0869	0.1000	0.065	0.109	0.133	0.179	0.109	-	0.114	0.133	0.133	-	0.179	0.179	-	-	-	0.250	0.358
1.50	1.900	1.056	0.955	1.000	0.0947	0.0920	0.0935	0.1080	0.065	0.109	0.145	0.200	0.109	-	0.125	0.145	0.145	-	0.200	0.200	-	-	-	0.281	0.400
2.00	2.375	1.056	0.955	1.000	0.1004	0.0977	0.0989	0.1145	0.065	0.109	0.154	0.218	0.109	-	0.125	0.154	0.154	-	0.218	0.218	-	-	-	0.344	0.436
2.50	2.875	1.056	0.955	1.000	0.1064	0.1031	0.1046	0.1213	0.083	0.120	0.203	0.276	0.120	-	0.188	0.203	0.203	-	0.276	0.276	-	-	-	0.375	0.552
3.00	3.500	1.056	0.955	1.000	0.1139	0.1099	0.1117	0.1298	0.083	0.120	0.216	0.300	0.120	-	0.188	0.216	0.216	-	0.300	0.300	-	-	-	0.438	0.600
4.00	4.500	1.056	0.955	1.000	0.1258	0.1207	0.1230	0.1434	0.083	0.120	0.237	0.337	0.120	-	0.188	0.237	0.237	-	0.337	0.337	-	0.438	-	0.531	0.674
6.00	6.625	1.056	0.955	1.000	0.1513	0.1437	0.1471	0.1724	0.109	0.134	0.280	0.432	0.134	-	-	0.280	0.280	-	0.432	0.432	-	0.562	-	0.719	0.864
8.00	8.625	1.056	0.955	1.000	0.1752	0.1654	0.1698	0.1997	0.109	0.148	0.322	0.500	0.148	0.250	0.277	0.322	0.322	0.406	0.500	0.500	0.594	0.719	0.812	0.906	0.875
10.00	10.750	1.056	0.955	1.000	0.2006	0.1884	0.1939	0.2287	0.134	0.165	0.365	0.500	0.165	0.250	0.307	0.365	0.365	0.500	0.500	0.594	0.719	0.844	1.000	1.125	1.000
12.00	12.750	1.056	0.955	1.000	0.2245	0.2100	0.2166	0.2560	0.156	0.180	0.375	0.500	0.180	0.250	0.330	0.375	0.406	0.562	0.500	0.688	0.844	1.000	1.125	1.312	1.000
14.00	14.000	1.056	0.955	1.000	0.2393	0.2236	0.2307	0.2730	0.156	0.188	0.375	0.500	0.250	0.312	0.375	0.375	0.438	0.594	0.500	0.750	0.938	1.094	1.250	1.406	-
16.00	16.000	1.056	0.955	1.000	0.2634	0.2452	0.2534	0.3003	0.165	0.188	0.375	0.500	0.250	0.312	0.375	0.375	0.500	0.656	0.500	0.844	1.031	1.219	1.438	1.594	-
18.00	18.000	1.056	0.955	1.000	0.2873	0.2669	0.2761	0.3275	0.165	0.188	0.375	0.500	0.250	0.312	0.438	0.375	0.562	0.750	0.500	0.938	1.156	1.375	1.562	1.781	-
20.00	20.000	1.056	0.955	1.000	0.3112	0.2885	0.2988	0.3548	0.188	0.218	0.375	0.500	0.250	0.375	0.500	0.375	0.594	0.812	0.500	1.031	1.281	1.500	1.750	1.969	-
24.00	24.000	1.056	0.955	1.000	0.3591	0.3318	0.3441	0.4094	0.218	0.250	0.375	0.500	0.250	0.375	0.562	0.375	0.688	0.969	0.500	1.219	1.531	1.812	2.062	2.344	-
26.00	26.000	1.056	0.955	1.000	0.3830	0.3535	0.3668	0.4366	-	-	-	-	0.312	0.500	-	0.375	-	-	0.500	-	-	-	-	-	-
28.00	28.000	1.056	0.955	1.000	0.4069	0.3751	0.3895	0.4639	-	-	-	-	0.312	0.500	0.625	0.375	-	-	0.500	-	-	-	-	-	-
30.00	30.000	1.056	0.955	1.000	0.4309	0.3968	0.4121	0.4912	0.250	0.312	-	-	0.312	0.500	0.625	0.375	-	-	0.500	-	-	-	-	-	-
32.00	32.000	1.056	0.955	1.000	0.4548	0.4184	0.4348	0.5185	-	-	-	-	0.312	0.500	0.625	0.375	0.688	-	0.500	-	-	-	-	-	-
34.00	34.000	1.056	0.955	1.000	0.4787	0.4401	0.4575	0.5457	-	-	-	-	0.312	0.500	0.625	0.375	0.688	-	0.500	-	-	-	-	-	-
36.00	36.000	1.056	0.955	1.000	0.5026	0.4618	0.4802	0.5730	-	-	-	-	0.312	0.500	0.625	0.375	0.750	-	0.500	-	-	-	-	-	-
40.00	40.000	1.056	0.955	1.000	0.5505	0.5051	0.5255	0.6276	-	-	-	-	-	-	-	0.375	-	-	0.500	-	-	-	-	-	-
42.00	42.000	1.056	0.955	1.000	0.5744	0.5267	0.5482	0.6548	-	-	-	-	-	-	-	0.375	-	-	0.500	-	-	-	-	-	-
48.00	48.000	1.056	0.955	1.000	0.6462	0.5917	0.6162	0.7367	-	-	-	-	-	-	-	0.375	-	-	0.500	-	-	-	-	-	-

ATTACHMENT 8.12 – MINIMUM WALL THICKNESS EXCEL SPREADSHEET (VERSION 1.0); "WALL THICKNESS PRIOR TO BENDING, PER ASME B31.3 (2012) AND PFI ES-24 (2013) SECTION 7" – PIPE LINE CLASS P5

CALCULATION FILE:	-
PROJECT NUMBER:	31269
DATE:	9/17/2016
MATERIAL SPEC:	P5
MATERIAL TYPE:	SMLS
MATERIAL DESIGNATION:	A312 TP316/316L
DESIGN PRESSURE (PSIG):	400
DESIGN TEMP (DEG. F):	200
S:ALLOWABLE STRESS (PSI):	20000
E: (QUALITY FACTOR)	1.00
W: (WELD JOINT STENGTH)	1.00
CORROSION ALLOWANCE:	0.063
Y COEFFICIENT:	0.4
MILL TOLERANCE (%):	12.5
RADIUS OF BEND: (D)	3.0

Notes/Assumptions:
1. Worst case fabrication methods per radius of bend from PFI ES-24 (2013) Section 7 were used to calculate minimum wall thickness prior to bending.
2. Standard bend radiuses per PFI ES-24 only. No interpolation available.
3. Mill tolerance applies to all sizes listed below.

Preparer: Jones, Grace — Date: Digitally signed by Jones, Grace DN: cn=Jones, Grace ou=USDB94 Date: 2016-09-26 14:43:40 -05'00'

Checker: Jason C. Jackson — Date: Digitally signed by Jason C. Jackson DN: cn=Jason C. Jackson, o=AECOM, ou=Piping, email=jason.jackson@aecom.com, c=US Date: 2017.05.10 15:30:15 -06'00'

PIPE SCHEDULES & CORRESPONDING NOMINAL WALL THICKNESSES (IN). PER ASME B36.10M (2004) AND ASME B36.19M (2004)

NOMINAL DIAMETER	ACTUAL DIAMETER	INTRADOS OF BEND	EXTRADOS OF BEND	CENTERLINE OF BEND	MIN. WT @ INTRADOS	MIN WT @ EXTRADOS	MIN. WT @ CENTERLINE	MIN. WT PRIOR TO BENDING	5S	10S	40S	80S	10	20	30	STD	40	60	XS	80	100	120	140	160	XXS
0.50	0.840	1.100	0.929	1.000	0.0825	0.0806	0.0815	0.1056	0.065	0.083	0.109	0.147	0.083	-	0.095	0.109	0.109	-	0.147	0.147	-	-	-	0.188	0.294
0.75	1.050	1.100	0.929	1.000	0.0851	0.0831	0.0839	0.1089	0.065	0.083	0.113	0.154	0.083	-	0.095	0.113	0.113	-	0.154	0.154	-	-	-	0.219	0.308
1.00	1.315	1.100	0.929	1.000	0.0884	0.0859	0.0869	0.1131	0.065	0.109	0.133	0.179	0.109	-	0.114	0.133	0.133	-	0.179	0.179	-	-	-	0.250	0.358
1.50	1.900	1.100	0.929	1.000	0.0957	0.0920	0.0935	0.1225	0.065	0.109	0.145	0.200	0.109	-	0.125	0.145	0.145	-	0.200	0.200	-	-	-	0.281	0.400
2.00	2.375	1.100	0.929	1.000	0.1016	0.0970	0.0989	0.1300	0.065	0.109	0.154	0.218	0.109	-	0.125	0.154	0.154	-	0.218	0.218	-	-	-	0.344	0.436
2.50	2.875	1.100	0.929	1.000	0.1078	0.1023	0.1046	0.1380	0.083	0.120	0.203	0.276	0.120	-	0.188	0.203	0.203	-	0.276	0.276	-	-	-	0.375	0.552
3.00	3.500	1.100	0.929	1.000	0.1156	0.1089	0.1117	0.1480	0.083	0.120	0.216	0.300	0.120	-	0.188	0.216	0.216	-	0.300	0.300	-	-	-	0.438	0.600
4.00	4.500	1.100	0.929	1.000	0.1281	0.1194	0.1230	0.1639	0.083	0.120	0.237	0.337	0.120	-	0.188	0.237	0.237	-	0.337	0.337	-	0.438	-	0.531	0.674
6.00	6.625	1.100	0.929	1.000	0.1546	0.1418	0.1471	0.1978	0.109	0.134	0.280	0.432	0.134	-	-	0.280	0.280	-	0.432	0.432	-	0.562	-	0.719	0.864
8.00	8.625	1.100	0.929	1.000	0.1795	0.1629	0.1698	0.2297	0.109	0.148	0.322	0.500	0.148	0.250	0.277	0.322	0.322	0.406	0.500	0.500	0.594	0.719	0.812	0.906	0.875
10.00	10.750	1.100	0.929	1.000	0.2060	0.1852	0.1939	0.2636	0.134	0.165	0.365	0.500	0.165	0.250	0.307	0.365	0.365	0.500	0.500	0.594	0.719	0.844	1.000	1.125	1.000
12.00	12.750	1.100	0.929	1.000	0.2309	0.2063	0.2168	0.2955	0.156	0.180	0.375	0.500	0.180	0.250	0.330	0.375	0.406	0.562	0.500	0.688	0.844	1.000	1.125	1.312	1.000
14.00	14.000	1.100	0.929	1.000	0.2485	0.2195	0.2307	0.3155	0.156	0.188	0.375	0.500	0.250	0.312	0.375	0.375	0.438	0.594	0.500	0.750	0.938	1.094	1.250	1.406	-
16.00	16.000	1.100	0.929	1.000	0.2714	0.2405	0.2534	0.3474	0.165	0.188	0.375	0.500	0.250	0.312	0.375	0.375	0.500	0.656	0.500	0.844	1.031	1.219	1.438	1.594	-
18.00	18.000	1.100	0.929	1.000	0.2963	0.2616	0.2761	0.3793	0.165	0.188	0.375	0.500	0.250	0.312	0.438	0.375	0.562	0.750	0.500	0.938	1.156	1.375	1.562	1.781	-
20.00	20.000	1.100	0.929	1.000	0.3212	0.2827	0.2988	0.4112	0.188	0.218	0.375	0.500	0.250	0.375	0.500	0.375	0.594	0.812	0.500	1.031	1.281	1.500	1.750	1.969	-
24.00	24.000	1.100	0.929	1.000	0.3711	0.3248	0.3441	0.4750	0.218	0.250	0.375	0.500	0.250	0.375	0.562	0.375	0.688	0.969	0.500	1.219	1.531	1.812	2.062	2.344	-
26.00	26.000	1.100	0.929	1.000	0.3960	0.3459	0.3668	0.5069	-	-	-	-	0.312	0.500	-	0.375	-	-	0.500	-	-	-	-	-	-
28.00	28.000	1.100	0.929	1.000	0.4209	0.3670	0.3895	0.5388	-	-	-	-	0.312	0.500	0.625	0.375	-	-	0.500	-	-	-	-	-	-
30.00	30.000	1.100	0.929	1.000	0.4459	0.3880	0.4121	0.5707	0.250	0.312	-	-	0.312	0.500	0.625	0.375	-	-	0.500	-	-	-	-	-	-
32.00	32.000	1.100	0.929	1.000	0.4708	0.4091	0.4348	0.6026	-	-	-	-	0.312	0.500	0.625	0.375	0.688	-	0.500	-	-	-	-	-	-
34.00	34.000	1.100	0.929	1.000	0.4957	0.4302	0.4575	0.6345	-	-	-	-	0.312	0.500	0.625	0.375	0.688	-	0.500	-	-	-	-	-	-
36.00	36.000	1.100	0.929	1.000	0.5206	0.4512	0.4802	0.6664	-	-	-	-	0.312	0.500	0.625	0.375	0.750	-	0.500	-	-	-	-	-	-
40.00	40.000	1.100	0.929	1.000	0.5705	0.4934	0.5255	0.7302	-	-	-	-	-	-	-	0.375	-	-	0.500	-	-	-	-	-	-
42.00	42.000	1.100	0.929	1.000	0.5954	0.5144	0.5482	0.7621	-	-	-	-	-	-	-	0.375	-	-	0.500	-	-	-	-	-	-
48.00	48.000	1.100	0.929	1.000	0.6702	0.5776	0.6162	0.8578	-	-	-	-	-	-	-	0.375	-	-	0.500	-	-	-	-	-	-

ATTACHMENT 8.13 – MINIMUM WALL THICKNESS EXCEL SPREADSHEET (VERSION 1.0); "WALL THICKNESS PRIOR TO BENDING, PER ASME B31.3 (2012) AND PFI ES-24 (2013) SECTION 7" – PIPE LINE CLASS P7

CALCULATION FILE	-
PROJECT NUMBER	31269
DATE	4/17/2017
MATERIAL SPEC	P7
MATERIAL TYPE	SMLS
MATERIAL DESIGNATION	A312 TP316/316L
DESIGN PRESSURE (PSIG)	729
DESIGN TEMP. (DEG. F)	-20
S ALLOWABLE STRESS (PSI)	20000
E. (QUALITY FACTOR)	1.00
W (WELD JOINT STENGTH)	1.00
CORROSION ALLOWANCE	0.063
Y COEFFICIENT	0.4
MILL TOLERANCE (%)	12.5
RADIUS OF BEND. (D)	5.0

Notes/Assumptions:
1. Worst case fabrication methods per radius of bend from PFI ES-24 (2013) Section 7 were used to calculate minimum wall thickness prior to bending
2. Standard bend radiusen per PFI ES-24 only. No interpolation available.
3. Mill tolerance applies to all sizes listed below.

Preparer: Bailey, Rachel — Date:

Checker: Jason C. Jackson — Date:

PIPE SCHEDULES & CORRESPONDING NOMINAL WALL THICKNESSES (IN), PER ASME B36.10M (2004) AND ASME B36.19M (2004)

NOMINAL DIAMETER	ACTUAL DIAMETER	INTRADOS OF BEND	EXTRADOS OF BEND	CENTERLINE OF BEND	MIN. WT @ INTRADOS	MIN WT @ EXTRADOS	MIN. WT @ CENTERLINE	MIN. WT PRIOR TO BENDING	5S	10S	40S	80S	10	20	30	STD	40	60	XS	80	100	120	140	160	XXS
0.50	0.84	1.056	0.955	1.000	0.0900	0.0883	0.0890	0.1026	0.065	0.083	0.109	0.147	0.083	-	0.095	0.109	0.109	-	0.147	0.147	-	-	-	0.188	0.294
0.75	1.05	1.056	0.955	1.000	0.0945	0.0923	0.0933	0.1077	0.065	0.083	0.113	0.154	0.083	-	0.095	0.113	0.113	-	0.154	0.154	-	-	-	0.219	0.308
1.00	1.32	1.056	0.955	1.000	0.1001	0.0975	0.0987	0.1141	0.065	0.109	0.133	0.179	0.109	-	0.114	0.133	0.133	-	0.179	0.179	-	-	-	0.250	0.358
1.50	1.90	1.056	0.955	1.000	0.1126	0.1088	0.1105	0.1284	0.065	0.109	0.145	0.200	0.109	-	0.125	0.145	0.145	-	0.200	0.200	-	-	-	0.281	0.400
2.00	2.38	1.056	0.955	1.000	0.1228	0.1180	0.1202	0.1400	0.065	0.109	0.154	0.218	0.109	-	0.125	0.154	0.154	-	0.218	0.218	-	-	-	0.344	0.436
2.50	2.88	1.056	0.955	1.000	0.1335	0.1277	0.1303	0.1522	0.083	0.120	0.203	0.276	0.120	-	0.188	0.203	0.203	-	0.276	0.276	-	-	-	0.375	0.552
3.00	3.50	1.056	0.955	1.000	0.1469	0.1398	0.1430	0.1674	0.083	0.120	0.216	0.300	0.120	-	0.188	0.216	0.216	-	0.300	0.300	-	-	-	0.438	0.600
4.00	4.50	1.056	0.955	1.000	0.1683	0.1592	0.1633	0.1918	0.083	0.120	0.237	0.337	0.120	-	0.188	0.237	0.237	-	0.337	0.337	-	0.438	-	0.531	0.674
6.00	6.63	1.056	0.955	1.000	0.2137	0.2003	0.2064	0.2436	0.109	0.134	0.280	0.432	0.134	-	-	0.280	0.280	-	0.432	0.432	-	0.562	-	0.719	0.864
8.00	8.63	1.056	0.955	1.000	0.2585	0.2391	0.2469	0.2924	0.109	0.148	0.322	0.500	0.148	0.250	0.277	0.322	0.322	0.406	0.500	0.500	0.594	0.719	0.812	0.906	0.875
10.00	10.75	1.056	0.955	1.000	0.3019	0.2802	0.2900	0.3442	0.134	0.165	0.365	0.500	0.165	0.250	0.307	0.365	0.365	0.500	0.500	0.594	0.719	0.844	1.000	1.125	1.000
12.00	12.75	1.056	0.955	1.000	0.3447	0.3190	0.3306	0.3930	0.156	0.180	0.375	0.500	0.180	0.250	0.330	0.375	0.406	0.562	0.500	0.688	0.844	1.000	1.125	1.312	1.000
14.00	14.00	1.056	0.955	1.000	0.3714	0.3432	0.3559	0.4235	0.156	0.188	0.375	0.500	0.250	0.312	0.375	0.375	0.438	0.594	0.500	0.750	0.938	1.094	1.250	1.406	-
16.00	16.00	1.056	0.955	1.000	0.4142	0.3819	0.3965	0.4722	0.165	0.188	0.375	0.500	0.250	0.312	0.375	0.375	0.500	0.656	0.500	0.844	1.031	1.219	1.438	1.594	-
18.00	18.00	1.056	0.955	1.000	0.4579	0.4207	0.4370	0.5218	0.165	0.188	0.375	0.500	0.250	0.312	0.438	0.375	0.562	0.750	0.500	0.938	1.156	1.375	1.562	1.781	-
20.00	20.00	1.056	0.955	1.000	0.4998	0.4594	0.4776	0.5698	0.188	0.218	0.375	0.500	0.250	0.375	0.500	0.375	0.594	0.812	0.500	1.031	1.281	1.500	1.750	1.969	-
24.00	24.00	1.056	0.955	1.000	0.5853	0.5369	0.5587	0.6673	0.218	0.250	0.375	0.500	0.250	0.375	0.562	0.375	0.688	0.969	0.500	1.219	1.531	1.812	2.062	2.344	-
26.00	26.00	1.056	0.955	1.000	0.6281	0.5756	0.5993	0.7161	-	-	-	-	0.312	0.500	-	0.375	-	-	0.500	-	-	-	-	-	-
28.00	28.00	1.056	0.955	1.000	0.6709	0.6144	0.6398	0.7648	-	-	-	-	0.312	0.500	0.625	0.375	-	-	0.500	-	-	-	-	-	-
30.00	30.00	1.056	0.955	1.000	0.7137	0.6531	0.6804	0.8136	0.250	0.312	-	-	0.312	0.500	0.625	0.375	-	-	0.500	-	-	-	-	-	-
32.00	32.00	1.056	0.955	1.000	0.7565	0.6918	0.7209	0.8624	-	-	-	-	0.312	0.500	0.625	0.375	0.688	-	0.500	-	-	-	-	-	-
34.00	34.00	1.056	0.955	1.000	0.7992	0.7306	0.7615	0.9111	-	-	-	-	0.312	0.500	0.625	0.375	0.688	-	0.500	-	-	-	-	-	-
36.00	36.00	1.056	0.955	1.000	0.8420	0.7693	0.8021	0.9599	-	-	-	-	0.312	0.500	0.625	0.375	0.750	-	0.500	-	-	-	-	-	-
40.00	40.00	1.056	0.955	1.000	0.9276	0.8468	0.8832	1.0574	-	-	-	-	-	-	-	0.375	-	-	0.500	-	-	-	-	-	-
42.00	42.00	1.056	0.955	1.000	0.9703	0.8855	0.9237	1.1062	-	-	-	-	-	-	-	0.375	-	-	0.500	-	-	-	-	-	-
48.00	48.00	1.056	0.955	1.000	1.0987	1.0018	1.0454	1.2525	-	-	-	-	-	-	-	0.375	-	-	0.500	-	-	-	-	-	-

ATTACHMENT 8.14 – MINIMUM WALL THICKNESS EXCEL SPREADSHEET (VERSION 1.0); "WALL THICKNESS PRIOR TO BENDING, PER ASME B31.3 (2012) AND PFI ES-24 (2013) SECTION 7" – PIPE LINE CLASS P9

CALCULATION FILE:	-
PROJECT NUMBER:	31269
DATE:	4/19/2017
MATERIAL SPEC:	P9
MATERIAL TYPE:	SMLS
MATERIAL DESIGNATION:	A312 TP304/304L
DESIGN PRESSURE (PSIG):	100
DESIGN TEMP. (DEG. F):	200
S: ALLOWABLE STRESS (PSI):	20000
E: (QUALITY FACTOR):	1.00
W: (WELD JOINT STENGTH):	1.00
CORROSION ALLOWANCE:	0.063
Y COEFFICIENT:	0.4
MILL TOLERANCE (%):	12.5
RADIUS OF BEND (D):	3.0

Notes/Assumptions:
1. Worst case fabrication methods per radius of bend from PFI ES-24 (2013) Section 7 were used to calculate minimum wall thickness prior to bending.
2. Standard bend radiuses per PFI ES-24 only. No interpolation available.
3. Mill tolerance applies to all sizes listed below.

Preparer: Bailey, Rachel — Date: Digitally signed by Bailey, Rachel DN: cn=Bailey, Rachel, ou=Users Date: 2017.04.17 12:13:42 -08'00'

Checker: Jason C. Jackson — Date: Digitally signed by Jason C. Jackson DN: cn=Jason C. Jackson, o=AECOM, ou=Piping, email=jason.jackson@aecom.com, c=US Date: 2017.05.10 13:31:03 -08'00'

PIPE SCHEDULES & CORRESPONDING NOMINAL WALL THICKNESSES (IN), PER ASME B36.10M (2004) AND ASME B36.19M (2004)

NOMINAL DIAMETER	ACTUAL DIAMETER	INTRADOS OF BEND	EXTRADOS OF BEND	CENTERLINE OF BEND	MIN. WT @ INTRADOS	MIN WT @ EXTRADOS	MIN. WT @ CENTERLINE	MIN. WT PRIOR TO BENDING	5S	10S	40S	80S	10	20	30	STD	40	60	XS	80	100	120	140	160	XXS
0.50	0.840	1.100	0.929	1.000	0.0746	0.0742	0.0744	0.0955	0.065	0.083	0.109	0.147	0.083	-	0.095	0.109	0.109	-	0.147	0.147	-	-	-	0.188	0.294
0.75	1.050	1.100	0.929	1.000	0.0753	0.0748	0.0750	0.0964	0.065	0.083	0.113	0.154	0.083	-	0.095	0.113	0.113	-	0.154	0.154	-	-	-	0.219	0.308
1.00	1.315	1.100	0.929	1.000	0.0761	0.0755	0.0757	0.0974	0.065	0.109	0.133	0.179	0.109	-	0.114	0.133	0.133	-	0.179	0.179	-	-	-	0.250	0.358
1.50	1.900	1.100	0.929	1.000	0.0780	0.0770	0.0774	0.0998	0.065	0.109	0.145	0.200	0.109	-	0.125	0.145	0.145	-	0.200	0.200	-	-	-	0.281	0.400
2.00	2.375	1.100	0.929	1.000	0.0794	0.0783	0.0788	0.1017	0.065	0.109	0.154	0.218	0.109	-	0.125	0.154	0.154	-	0.218	0.218	-	-	-	0.344	0.436
2.50	2.875	1.100	0.929	1.000	0.0810	0.0798	0.0802	0.1037	0.083	0.120	0.203	0.276	0.120	-	0.188	0.203	0.203	-	0.276	0.276	-	-	-	0.375	0.552
3.00	3.500	1.100	0.929	1.000	0.0830	0.0813	0.0820	0.1062	0.083	0.120	0.216	0.300	0.120	-	0.188	0.216	0.216	-	0.300	0.300	-	-	-	0.438	0.600
4.00	4.500	1.100	0.929	1.000	0.0861	0.0839	0.0848	0.1102	0.083	0.120	0.237	0.337	0.120	-	0.188	0.237	0.237	-	0.337	0.337	-	0.438	-	0.531	0.674
6.00	6.625	1.100	0.929	1.000	0.0928	0.0895	0.0909	0.1188	0.109	0.134	0.280	0.432	0.134	-	-	0.280	0.280	-	0.432	0.432	-	0.562	-	0.719	0.864
8.00	8.625	1.100	0.929	1.000	0.0990	0.0948	0.0966	0.1268	0.109	0.148	0.322	0.500	0.148	0.250	0.277	0.322	0.322	0.406	0.500	0.500	0.594	0.719	0.812	0.906	0.875
10.00	10.750	1.100	0.929	1.000	0.1057	0.1005	0.1027	0.1353	0.134	0.165	0.365	0.500	0.165	0.250	0.307	0.365	0.365	0.500	0.500	0.594	0.719	0.844	1.000	1.125	1.000
12.00	12.750	1.100	0.929	1.000	0.1120	0.1058	0.1084	0.1433	0.156	0.180	0.375	0.500	0.180	0.250	0.330	0.375	0.406	0.562	0.500	0.688	0.844	1.000	1.125	1.312	1.000
14.00	14.000	1.100	0.929	1.000	0.1159	0.1091	0.1119	0.1484	0.156	0.188	0.375	0.500	0.250	0.312	0.375	0.375	0.438	0.594	0.500	0.750	0.938	1.094	1.250	1.406	-
16.00	16.000	1.100	0.929	1.000	0.1222	0.1144	0.1178	0.1564	0.165	0.188	0.375	0.500	0.250	0.312	0.375	0.375	0.500	0.656	0.500	0.844	1.031	1.219	1.438	1.594	-
18.00	18.000	1.100	0.929	1.000	0.1284	0.1197	0.1233	0.1644	0.165	0.188	0.375	0.500	0.250	0.312	0.438	0.375	0.562	0.750	0.500	0.938	1.156	1.375	1.562	1.781	-
20.00	20.000	1.100	0.929	1.000	0.1347	0.1250	0.1290	0.1724	0.188	0.218	0.375	0.500	0.250	0.375	0.500	0.375	0.594	0.812	0.500	1.031	1.281	1.500	1.750	1.969	-
24.00	24.000	1.100	0.929	1.000	0.1473	0.1368	0.1404	0.1885	0.218	0.250	0.375	0.500	0.250	0.375	0.562	0.375	0.688	0.969	0.500	1.219	1.531	1.812	2.062	2.344	-
26.00	26.000	1.100	0.929	1.000	0.1535	0.1409	0.1461	0.1965	-	-	-	-	0.312	0.500	-	0.375	-	-	0.500	-	-	-	-	-	-
28.00	28.000	1.100	0.929	1.000	0.1598	0.1461	0.1518	0.2046	-	-	-	-	0.312	0.500	0.625	0.375	-	-	0.500	-	-	-	-	-	-
30.00	30.000	1.100	0.929	1.000	0.1661	0.1514	0.1575	0.2126	0.250	0.312	-	-	0.312	0.500	0.625	0.375	-	-	0.500	-	-	-	-	-	-
32.00	32.000	1.100	0.929	1.000	0.1724	0.1567	0.1632	0.2206	-	-	-	-	0.312	0.500	0.625	0.375	0.688	-	0.500	-	-	-	-	-	-
34.00	34.000	1.100	0.929	1.000	0.1786	0.1620	0.1689	0.2286	-	-	-	-	0.312	0.500	0.625	0.375	0.688	-	0.500	-	-	-	-	-	-
36.00	36.000	1.100	0.929	1.000	0.1849	0.1673	0.1747	0.2367	-	-	-	-	0.312	0.500	0.625	0.375	0.750	-	0.500	-	-	-	-	-	-
40.00	40.000	1.100	0.929	1.000	0.1974	0.1779	0.1861	0.2527	-	-	-	-	-	-	-	0.375	-	-	0.500	-	-	-	-	-	-
42.00	42.000	1.100	0.929	1.000	0.2037	0.1832	0.1918	0.2607	-	-	-	-	-	-	-	0.375	-	-	0.500	-	-	-	-	-	-
48.00	48.000	1.100	0.929	1.000	0.2225	0.1991	0.2089	0.2848	-	-	-	-	-	-	-	0.375	-	-	0.500	-	-	-	-	-	-

ATTACHMENT 8.15 – MINIMUM WALL THICKNESS EXCEL SPREADSHEET (VERSION 1.0); "WALL THICKNESS PRIOR TO BENDING, PER ASME B31.3 (2012) AND PFI ES-24 (2013) SECTION 7" – PIPE LINE CLASS P9

Wall Thickness Prior to Bending, Per ASME B31.3 (2014) Para. 304.2.1 and PFI ES-24 (2013) Section 7

CALCULATION FILE	-
PROJECT NUMBER	31269
DATE	4/10/2017
MATERIAL SPEC	P9
MATERIAL TYPE	SMLS
MATERIAL DESIGNATION	A312 TP304/304L
DESIGN PRESSURE (PSIG)	100
DESIGN TEMP (DEG F)	200
S ALLOWABLE STRESS (PSI)	20000
E (QUALITY FACTOR)	1.00
W (WELD JOINT STENGTH)	1.00
CORROSION ALLOWANCE	0.063
Y COEFFICIENT	0.4
MILL TOLERANCE (%)	12.5
RADIUS OF BEND (D)	5.0

Notes/Assumptions:
1. Worst case fabrication methods per radius of bend from PFI ES-24 (2013) Section 7 were used to calculate minimum wall thickness prior to bending.
2. Standard bend radiuses per PFI ES-24 only. No interpolation available.
3. Mill tolerance applies to all sizes listed below.

Preparer:	Date:
Bailey, Rachel	Digitally signed by Bailey Rachel DN: cn=Bailey, Rachel, o=Jacobs Date: 2017.04.17 12:22:05 -08'00'

Checker:	Date:
Jason C. Jackson	Digitally signed by Jason C. Jackson DN: cn=Jason C. Jackson, o=AECOM, ou=Piping, email=jason.jackson@aecom.com, c=US Date: 2017.05.16 15:31:47 -08'00'

PIPE SCHEDULES & CORRESPONDING NOMINAL WALL THICKNESSES (IN), PER ASME B36.10M (2004) AND ASME B36.19M (2004)

NOMINAL DIAMETER	ACTUAL DIAMETER	INTRADOS OF BEND	EXTRADOS OF BEND	CENTERLINE OF BEND	MIN. WT @ INTRADOS	MIN WT @ EXTRADOS	MIN. WT @ CENTERLINE	MIN. WT PRIOR TO BENDING	5S	10S	40S	80S	10	20	30	STD	40	60	XS	80	100	120	140	160	XXS
0.50	0.840	1.056	0.955	1.000	0.0745	0.0743	0.0744	0.0850	0.065	0.083	0.109	0.147	0.083	-	0.095	0.109	0.109	-	0.147	0.147	-	-	-	0.188	0.294
0.75	1.050	1.056	0.955	1.000	0.0752	0.0749	0.0750	0.0857	0.065	0.083	0.113	0.154	0.083	-	0.095	0.113	0.113	-	0.154	0.154	-	-	-	0.219	0.308
1.00	1.315	1.056	0.955	1.000	0.0760	0.0756	0.0757	0.0866	0.065	0.109	0.133	0.179	0.109	-	0.114	0.133	0.133	-	0.179	0.179	-	-	-	0.250	0.358
1.50	1.900	1.056	0.955	1.000	0.0777	0.0772	0.0774	0.0886	0.065	0.109	0.145	0.200	0.109	-	0.125	0.145	0.145	-	0.200	0.200	-	-	-	0.281	0.400
2.00	2.375	1.056	0.955	1.000	0.0791	0.0785	0.0786	0.0902	0.065	0.109	0.154	0.218	0.109	-	0.125	0.154	0.154	-	0.218	0.218	-	-	-	0.344	0.436
2.50	2.875	1.056	0.955	1.000	0.0807	0.0798	0.0802	0.0919	0.083	0.120	0.203	0.276	0.120	-	0.188	0.203	0.203	-	0.276	0.276	-	-	-	0.375	0.552
3.00	3.500	1.056	0.955	1.000	0.0825	0.0815	0.0820	0.0941	0.083	0.120	0.216	0.300	0.120	-	0.188	0.216	0.216	-	0.300	0.300	-	-	-	0.438	0.600
4.00	4.500	1.056	0.955	1.000	0.0855	0.0842	0.0848	0.0975	0.083	0.120	0.237	0.337	0.120	-	0.188	0.237	0.237	-	0.337	0.337	-	0.438	-	0.531	0.674
6.00	6.625	1.056	0.955	1.000	0.0919	0.0900	0.0909	0.1046	0.109	0.134	0.280	0.432	0.134	-	-	0.280	0.280	-	0.432	0.432	-	0.562	-	0.719	0.864
8.00	8.625	1.056	0.955	1.000	0.0980	0.0955	0.0966	0.1117	0.109	0.148	0.322	0.500	0.148	0.250	0.277	0.322	0.322	0.406	0.500	0.500	0.594	0.719	0.812	0.906	0.875
10.00	10.750	1.056	0.955	1.000	0.1044	0.1013	0.1027	0.1190	0.134	0.165	0.365	0.500	0.165	0.250	0.307	0.365	0.365	0.500	0.500	0.594	0.719	0.844	1.000	1.125	1.000
12.00	12.750	1.056	0.955	1.000	0.1104	0.1067	0.1084	0.1259	0.156	0.180	0.375	0.500	0.180	0.250	0.330	0.375	0.406	0.562	0.500	0.688	0.844	1.000	1.125	1.312	1.000
14.00	14.000	1.056	0.955	1.000	0.1141	0.1101	0.1119	0.1301	0.156	0.188	0.375	0.500	0.250	0.312	0.375	0.375	0.438	0.594	0.500	0.750	0.938	1.094	1.250	1.406	-
16.00	16.000	1.056	0.955	1.000	0.1202	0.1156	0.1176	0.1370	0.165	0.188	0.375	0.500	0.250	0.312	0.375	0.375	0.500	0.656	0.500	0.844	1.031	1.219	1.438	1.594	-
18.00	18.000	1.056	0.955	1.000	0.1262	0.1210	0.1233	0.1436	0.165	0.188	0.375	0.500	0.250	0.312	0.438	0.375	0.562	0.750	0.500	0.938	1.156	1.375	1.562	1.781	-
20.00	20.000	1.056	0.955	1.000	0.1322	0.1264	0.1290	0.1507	0.188	0.218	0.375	0.500	0.250	0.375	0.500	0.375	0.594	0.812	0.500	1.031	1.281	1.500	1.750	1.969	-
24.00	24.000	1.056	0.955	1.000	0.1442	0.1373	0.1404	0.1644	0.218	0.250	0.375	0.500	0.250	0.375	0.562	0.375	0.688	0.969	0.500	1.219	1.531	1.812	2.062	2.344	-
26.00	26.000	1.056	0.955	1.000	0.1502	0.1428	0.1461	0.1713	-	-	-	-	0.312	0.500	-	0.375	-	-	0.500	-	-	-	-	-	-
28.00	28.000	1.056	0.955	1.000	0.1563	0.1482	0.1516	0.1781	-	-	-	-	0.312	0.500	0.625	0.375	-	-	0.500	-	-	-	-	-	-
30.00	30.000	1.056	0.955	1.000	0.1623	0.1537	0.1575	0.1850	0.250	0.312	-	-	0.312	0.500	0.625	0.375	-	-	0.500	-	-	-	-	-	-
32.00	32.000	1.056	0.955	1.000	0.1683	0.1591	0.1632	0.1919	-	-	-	-	0.312	0.500	0.625	0.375	0.688	-	0.500	-	-	-	-	-	-
34.00	34.000	1.056	0.955	1.000	0.1743	0.1646	0.1689	0.1987	-	-	-	-	0.312	0.500	0.625	0.375	0.688	-	0.500	-	-	-	-	-	-
36.00	36.000	1.056	0.955	1.000	0.1803	0.1700	0.1747	0.2056	-	-	-	-	0.312	0.500	0.625	0.375	0.750	-	0.500	-	-	-	-	-	-
40.00	40.000	1.056	0.955	1.000	0.1924	0.1809	0.1861	0.2193	-	-	-	-	-	-	-	0.375	-	-	0.500	-	-	-	-	-	-
42.00	42.000	1.056	0.955	1.000	0.1984	0.1863	0.1918	0.2262	-	-	-	-	-	-	-	0.375	-	-	0.500	-	-	-	-	-	-
48.00	48.000	1.056	0.955	1.000	0.2165	0.2027	0.2089	0.2468	-	-	-	-	-	-	-	0.375	-	-	0.500	-	-	-	-	-	-

REPORT

31269-21-RPT-0001

MATERIAL OF CONSTRUCTION EVALUATION

AECOM ATKINS AREVA

LOW ACTIVITY WASTE PRETREATMENT SYSTEM

Project No. 31269 (T5L01)

31269-21-RPT-0001

Safety Related ☒ Non-Safety Related ☐

Material of Construction Evaluation

Prepared for

Washington River Protection Solutions, LLC

Revision: 1

Status: Final

MARK G WOODWORTH
STATE OF WASHINGTON
51519
REGISTERED
PROFESSIONAL ENGINEER

6-1-2017

For Permitting

REVISION PAGE

Project Name:	LAWPS	**Discipline:**	Process
Client:	Washington River Protection Solutions	**Project Number:**	31269 (T5L01)
		Latest Revision:	1

REVISION SIGNATURES

Tom Nelson	Tom Nelson	05/31/2017	Mark Woodworth	Mark Woodworth	
Prepared by		**Date**	**Approved by (SDE/Lead)**		**Date**
Stan Gingrich	Gingrich, Stan		Paul Bell	Schaller, John	For PMB
Checked by		**Date**	**Approved by (QA)**		**Date**
Milo Himes	Milo Himes		Dan Priebe	Michael Schultze Digitally signed by Michael Schultze Date: 2017.05.31 19:33:56 -06'00'	For DP
Verified by		**Date**	**Approved by (PEM)**		**Date**

Status	Rev. No.	Date	Prepared By	Pages	Description of Changes
Final	0	01/23/2017	Tom Nelson	45	Issued for 60% Design Review
Final	1	05/31/2017	Tom Nelson	47	Issued for Design

Safety Related: Yes ☒ No ☐ (This document is Safety Related only for final material recommendations and corrosion/erosion allowances.)	**Quality Level:** Full QA ☒ Enhanced QA ☐ Commercial QA ☐

EXECUTIVE SUMMARY

This report summarizes the recommended materials to be used in the Low Activity Waste Pretreatment System (LAWPS). The system consists of waste processing equipment and piping that will be used in a moderately corrosive environment through the various stages of pretreatment. The system also includes equipment and piping to provide the LAWPS facility with potable water, deionized water, glycol/water, nitric acid solution, sodium hydroxide solutions, sodium nitrite solution, oxalic acid solution, compressed air, and ventilation air. There are also process vent piping and ventilation exhaust ducts.

A material of construction evaluation was made after evaluating operating conditions, media composition and concentrations, temperature, pH, velocities and suspended particle hardness. The evaluation considered both corrosive and erosive effects of the media on the recommended materials. Based on these considerations, the recommended materials are:

- Carbon Steel
- Type 304L Stainless Steel or 304/304L Stainless Steel (dual certified)
- Type 316L Stainless Steel or 316/316L Stainless Steel (dual certified)
- Polyvinyl Chloride (PVC)
- Cement Lined Ductile Iron

Dual certified stainless steel (Type 304/304L and Type 316/316L) is preferred due to the higher allowable stress, however use of non-dual certified low carbon stainless steel (Type 304L and Type 316L) could be used for some services if dual certified stainless steel is not available.

The primary focus of this report was to evaluate the materials of construction for the pressure containing boundaries of the process equipment, piping and piping components. Internal components (e.g. valve trim) may be of different materials of construction as appropriate to their functions.

There have been numerous studies and reports written about materials of construction for Hanford tank waste, and the Waste Treatment and Immobilization Plant (WTP). These reports were reviewed and applied to the LAWPS facility. Type 316/316L stainless steel is the recommended material of construction for the main process equipment and piping. Based on the operating temperatures and waste composition, Type 316/316L stainless steel will be adequate for the 40 year life of the of LAWPS facility.

Alternate materials of construction were considered for the Lag Storage Tanks for potential cost savings. The Lag Storage Tanks are the largest equipment items in the LAWPS facility, and therefore using a less costly material such as carbon steel or Type 304/304L stainless steel was considered. The Hanford Double-Shell Tanks (DSTs) are carbon steel tanks, and (except for Tank AY-102) have been found to be fit for use based on the Double-Shell Tank System Integrity Assessment Report (Reference 33). Therefore, the Lag Storage Tanks, which will be used to store liquid waste of similar composition to the liquid waste stored in the DSTs, could possibly also be constructed of carbon steel. Revision 0 of this evaluation concluded that carbon steel could probably be used for the Lag Storage Tanks, however further evaluation would be required

to determine the best carbon steel material specification and construction methodology (e.g. post-weld heat treatment requirements, etc.). Although the base material cost of carbon steel is lower than stainless steel, other considerations such as higher corrosion/erosion allowances and post-weld heat treatment, if required, would add to the total installed cost of carbon steel. Based on Revision 0 of the MOC Evaluation, WRPS provided direction (via LAWPS/PTCN 0013): "Changing to carbon steel tanks would increase project risk in that the AY-102 root cause investigation may point to fabrication techniques unique to carbon steel tank fabrication as having contributed to the tank failure (e.g. stress relief and needed rework). Judgement is that the project schedule risk associated with the ongoing AY-102 root cause investigation is not worth the potential cost savings for carbon steel tanks. Recommendation is to stay with 316/316L stainless steel lag storage tanks."

Materials of construction for all other support systems, including reagents, water, and utility services were also evaluated. A generally conservative approach was taken in recommendations for materials of construction for these support systems, to ensure that they do not limit the life of the facility.

The report also recommends corrosion and erosion allowances.

Material designations and corrosion/erosion allowances are selected and defined by the appropriate design document (data sheet, specification, or equivalent).

TABLE OF CONTENTS

1.0 Introduction **1**

2.0 Previous Reports **3**

2.1 Reports Related to Hanford Tank Farm Operations 3

2.2 Reports Related to the Waste Treatments and Immobilization Plant (WTP) Project 5

2.3 Other Hanford and Savannah River Reports 8

3.0 Assessment Methodology **9**

4.0 Materials of Construction Evaluations by System **10**

4.1 Waste Processes and Piping in Which Waste pH is Always Over 12 10

4.2 Encasement Waste Transfer Piping 20

4.3 Cross Flow Filter System 23

4.4 IX System 26

4.5 Effluent Collection System 28

4.6 Nitric Acid (HNO_3) System 29

4.7 Sodium Hydroxide (NaOH) System 30

4.8 Sodium Nitrite ($NaNO_2$) System 31

4.9 Potable Water System 32

4.10 Process Water System 33

4.11 Glycol Water System 34

4.12 Fire Water System 35

4.13 Compressed Air Systems 36

4.14 Process Vents and HVAC Ventilation System 36

4.16 Fresh Resin and Spent Resin Systems 38

5.0 Conclusions and Recommendations **39**

6.0 References **45**

LIST OF FIGURES

Figure 1 – LAWPS Facility 1
Figure 2 – Caustic Service Chart 14

LIST OF TABLES

Table 1 – Waste Feed Composition and Operating Conditions 11
Table 2 – Localized Corrosion Design Limits for 300 Series Stainless Steel 16
Table 3 - Summary of Recommendations by System 40
Table 4 - Summary of Recommendations by Piping Specification 43

ABBREVIATIONS AND ACRONYMS

Term	Definition
CA	Corrosion Allowance
CFF	Cross Flow Filters
CR	Corrosion Rate
CSCC	Caustic Stress Corrosion Cracking
DCP	Double Containment Piping
DOE	(United States) Department of Energy
DST	Double Shell Tank
ECS	Effluent Collection System
FFT	Filter Feed Tank
fps	feet per second
HAZ	Heat Affected Zone
HVAC	Heating, Ventilation and Air Conditioning
IXC	Ion Exchange Column(s)
LAW	Low Activity Waste
LAWPS	Low Activity Waste Pretreatment System
LST	Lag Storage Tank
mm	millimeters
mps	meters per second
mpy	mils per year
MSA	Mission Support Alliance
PVC	Polyvinyl Chloride
ppm	parts per million
PREN	Pitting Resistance Equivalent Number
PWHT	Post Weld Heat Treatment
SCC	Stress Corrosion Cracking
sRF	Spherical Resorcinol-Formaldehyde
TPW	Treated Process Water
TWDT	Treated Waste Delay Tank
WRPS	Washington River Protection Solutions, LLC
wt%	weight percentage
UT	Ultrasonic Testing
WTP	Waste Treatment and Immobilization Plant

Term	Definition
yr	year

1.0 INTRODUCTION

The Low Activity Waste Pretreatment System (LAWPS) has several different stages of treatment and uses several reagents/chemicals and water. This evaluation recommends the materials of construction for each stage of treatment and for the reagent/chemical and water supply systems to ensure a 40 year facility design life.

Both corrosion and erosion were evaluated, although corrosion was the main concern as the solids content of most systems is relatively low. This evaluation considers chemical corrosion and erosion only, and not cathodic/induced corrosion.

The LAWPS primary function is to remove particulates and radioactive cesium (^{137}Cs) from the DST System supernatant waste. The treated waste is stored in Lag Storage Tanks (LST) and pumped to the Waste Treatment and Immobilization Plant (WTP). The solids and ^{137}Cs will be returned to the DST System. A system diagram of the LAWPS is provided in Figure 1.

Figure 1 – LAWPS Facility

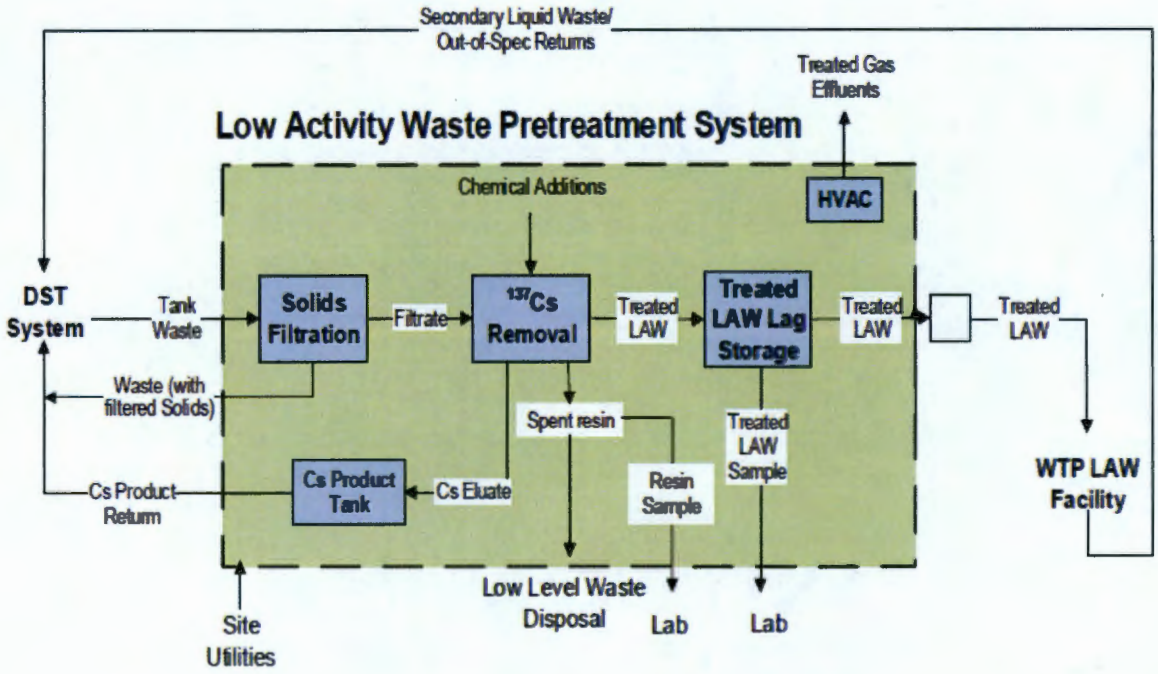

In order to recommend materials for LAWPS components, chemical constituents in the supernatant waste transfer from the DST System to LAWPS were reviewed. The chemicals that could influence corrosion parameters in the waste feed include chlorides, fluorides, nitrates, nitrites, hydroxide, and sulfate. Other considerations for corrosion that were evaluated are:

- Temperature
- Flow rate
- pH

- 40 year facility life

The only systems that could be affected by erosion are the Cross Flow Filter (CFF) system, the waste feed pipeline from Tank Farm to LAWPS and the waste return pipeline from the FFT to the Tank Farm. The fluids in these systems are flowing at a relatively high flow rates and will include entrained solids. Considerations for erosion that were evaluated are:

- Amount of suspended solids and their hardness
- Velocity

Proper selection of materials of construction and corrosion/erosion allowances are important for safety functions as required per RPP-RPT-58553, Revision 6, LAWPS Safety Control Development and Design Integration (Reference 29):

- For the Primary Process Piping and Pressurized Equipment, the safety function is to provide confinement of waste.

- For the Reagent System Confinement Boundary the safety function is to provide confinement of corrosive chemicals.

2.0 PREVIOUS REPORTS

There have been a number of previous reports addressing materials of construction, corrosion and erosion issues at the Hanford Tank Farm and at WTP. Because the LAWPS facility will be treating essentially the same waste as is stored in the Hanford Tank Farm and the low activity waste that will be treated at WTP, the materials of construction evaluations for these facilities are applicable to LAWPS. In addition to previous reports for Hanford facilities, other literature reports were used for this evaluation. Following is a listing and brief summary of these reports:

2.1 Reports Related to Hanford Tank Farm Operations

2.1.1 Deleted

2.1.2 Deleted

2.1.3 CH2M-32542-FP, Rev. 0, Inhibition of Stress Corrosion Cracking of Carbon Steel Storage Tanks at Hanford, C. Brossia, J. A. Beavers, M. P. H. Brongers, G. L. Edgemon, G. S. Frankel, B. Wiersma, H. Berman, L. Stock, K. D. Boomer, CH2M Hill Hanford Group, January 2007 (Reference 3).

The objective of this report was to determine the range of conditions under which the Hanford carbon steel tanks are susceptible to localized SCC. The report defines possible corrosion mitigation strategies.

2.1.4 RPP-34657-FP, Rev. 0, "A Study of Corrosion and Stress Corrosion Cracking of Carbon Steel Nuclear Waste Storage Tanks", K. D. Boomer, J. Beavers, C. Brossia, F. Gui, C. Scott, G. Edgemon, H. Berman, G. Frankel, CH2M Hill, September 2007 (Reference 4).

The objective of this report was to study the susceptibility/propensity of the carbon steel used in the DST walls to pitting and SCC.

2.1.5 Deleted

2.1.6 RPP-RPT-52791, Rev. 0, "Tank Farm Waste Transfer System Fitness-for-Service Erosion and Corrosion Bases", J. K. Engeman, C. L. Giradot, E. R. Wilson, WRPS, J. S. Garfield and D. J. Washenfelder, AEM Consulting, LLC, November 9, 2015 (Reference 6).

This report provides results of corrosion and erosion testing of existing Hanford waste transfer piping and pipe fittings using ultrasonic testing (UT). Both carbon steel and Type 304L stainless steel pipelines were tested.

The waste transfer pipelines evaluated were in services similar to the expected LAWPS waste transfer pipelines in regards to the following parameters:

- Waste compositions were similar to LAWPS feed.
- Velocities: 6 to 10 ft/sec
- Temperatures 80 to 130°F

- Densities: 1.1 to 1.4 g/mL
- Solids content: typically 3 to 5 percent (maximum 25 percent

2.1.7 RPP-RPT-58441, Rev. 1, Double-Shell Tank System Integrity Assessment Report (DSTAR), P. M. Giever and K. D. Boomer, WRPS, November 21, 2016 (Reference 33)

This integrity assessment report determined that the DST System is fit for use such that the tanks and ancillary systems are not leaking, are adequately designed, and are structurally adequate and compatible with the waste to ensure that the tank or ancillary system will not collapse, rupture, or fail. This report documents the activities, reviews, analyses, evaluations, and examinations performed by the Independent Qualified Registered Professional Engineer to support his determination.

2.1.8 PNNL-13571, Expert Panel Recommendations for Hanford Double-Shell Tank Life Extension, C. W. Stewart, S. H. Bush, H. S. Berman, C. J. Czajkowski, J. R. Divine, G. J. Posakony, A. B. Johnson, M. R. Elmore, D. A. Reynolds, R. P. Anantatmula, R. L. Sindelar, P. E. Zapp, Pacific Northwest Laboratories, June 2001 (Reference 34)

An expert workshop was held in Richland, Washington, May 1-4, 2001 to review the Hanford Double-Shell Tank Integrity Project and make recommendations to extend the life of the double-shell tanks. The scope of the workshop was limited to corrosion of the primary tank liner, and the main areas for review were waste chemistry control, headspace and annulus humidity control, tank inspection, and corrosion monitoring. The conclusion of the workshop was that DSTs were built to last 20-50 years, and with careful operational controls and management attention, their service life can be extended. Conversely, if appropriate conservative chemistry controls are not routinely maintained, and vital support systems become inoperative, DSTs may not achieve their original design life. The workshop developed 73 specific recommendations to improve the tank integrity program. A senior review committee selected from the initial workshop participants later grouped and sorted this list into 27 high-priority recommendations. The report describes the current state of the program, the final recommendations of the workshop, and the rationale for their selection.

2.1.9 RPP-28538, Rev. 5, Volume 1: IQRPE Double-Shell Tank Integrity Assessment Report HFFACO M-48-14, J. Huber, CH2M Hill Hanford Group, Inc., September 30, 2008 (Reference 35)

This document is the authoritative document for overall integrity assessment activity for the waste storage tanks, pits, vaults, and buried piping using the post June 30, 2005 DST System Configuration. For consideration of use of carbon steel for the Lag Storage Tanks, Section 4.6 of this document, "Calculations for Useful Life" provide estimates for the estimated useful life of the carbon steel DSTs. Based on the determined failure mode of through-wall pitting, the maximum credible measured corrosion rate of 2.8 mils/yr, the minimum wall thickness of 0.306 inches, the minimum time-to-penetration was calculated to be 109 years.

2.1.10 RPP-RPT-47337, Rev. 0, Specifications for the Minimization of the Stress Corrosion Cracking Threat in Double-Shell Tank Wastes, L. M. Stock, A. J. Feero, J. R. Follett, WRPS, August 2011 (Reference 28)

Specifications for the minimization of the threat of stress corrosion cracking in the double-shell tanks are presented together with the empirical evidence that justifies their selection. The fact that the wastes in these tanks have cooled significantly since the present chemistry control limits were first adopted provides an opportunity for the adjustment of the controls without compromising the integrity of the waste tanks. The new specifications for the nitrate ion rich wastes are shown below:

Double-Shell Tank Specification Criteria	Limit
Maximum Temperature	50 °C
Maximum Concentration of Nitrate Ion	6.0 M
Maximum Concentration of Hydroxide Ion	6.0 M
Minimum pH	11
Minimum Concentration of Nitrite Ion	0.05 M
Minimum Nitrite Ion/Nitrate Ion Ratio	0.15

2.1.11 RPP-RPT-58301, Rev. 0, Summary of Initial Two Rounds of Double-Shell Tank Ultrasonic Testing, K. D. Boomer, J. R. Gunter, B. J. Vazquez, (WRPS), J. S. Garfield (AEM Consulting), May 2015 (Reference 36)

This report documents and compares the first two rounds of ultrasonic testing inspections for the Hanford double-shell tanks (DST). The first inspections were performed from 1996 to 2006. The second round occurred from 2007 through the present. These examinations are performed for the purpose of detecting, reporting, and comparing plate-thinning areas, pitting areas, and linear indications.

The ultrasonic testing data for the primary tank walls show no significant loss of wall thickness, and the walls are more than adequate to support their structural function. The average wall thickness values are still above the nominal plate thickness values specified in the original design for primary tank wall thicknesses.

2.2 Reports Related to the Waste Treatments and Immobilization Plant (WTP) Project

2.2.1 24590-WTP-RPT-M-01-001, **"Materials Selection Report", Rev. 0, J. Devine, May 19, 2003** (Reference 7).

The purpose of this report was to document the basis for materials selection for the WTP project. The report reviews the basic corrosion processes that are relevant to materials of construction selection for the WTP. Uniform corrosion and various types of localized corrosion were evaluated. In addition to waste chemistry considerations, operating parameters such as temperature, velocity and pH were evaluated.

Materials of construction evaluated in this report include:

- Carbon steel
- Type 304/304L stainless steel

- Type 316/316L stainless steel
- Nickel/chromium/molybdenum alloys
- Titanium alloys
- Polymers
- Miscellaneous materials

The report summarizes the applicability of these materials to the WTP facility, and suggests limits of operations (e.g. temperature) for each material in various services.

2.2.2 24590-WTP-RPT-M-04-0008, **"Evaluation of Stainless Steel and Nickel Allow Wear Rates in WTP Waste Streams at Low Velocities", S. W. Vail, May 26, 2010** (Reference 8).

This report estimates wear due to corrosion and erosion of piping, vessels and components by process waste flow in the WTP facility. The focus is on wear due to relatively low velocities of waste (less than 13 fps). This is applicable to LAWPS, as the velocities in LAWPS piping will be less than 10 fps.

The equations were developed from testing using silica particles with a hardness of 9 on the Mhos scale. Reference 22 provides a range of 2.1 to 6.5 on the Mhos scale as the best available estimate of hardness of solids particles in the LAWPS waste feed, based on the minerals present in the waste feed. Therefore, the equations developed in Reference 22 are based on higher solid particle hardness than the best estimate of LAWPS waste feed solid particle hardness, and are therefore conservative.

The report develops equations for erosion rate, E, from a general equation:

$$E = aV^n d^p C^q,$$

Where, V is the velocity, d is the particle diameter, and C is the slurry solids content expressed as a weight fraction. The other constants in this equation are dependent on the material type.

For mild steel, E_w (mm/yr):

$$E_{w(steel)} = 0.223V^{2.148}d^{0.344}C^{0.556}$$

For stainless steel, the erosion rate is 40% of the erosion rate for mild steel.

Using these equations and information on the LAWPS streams that contain solids, erosion rates can be estimated.

Section 5 provides a review of published literature and testing results for corrosion rates for Type 304/304L and Type 316/316L in nitric acid, sodium hydroxide and waste solutions at various temperatures.

2.2.3 24590-WTP-RPT-ENG-11-154, **"UFP System Elevated Temperature Materials Corrosion Testing", R. B. Davis, October 18, 2011** (Reference 9).

This report provides evaluations of published literature and test results on various types of corrosion that could be possible in WTP wastes at temperature ranges from normal LAWPS temperatures to much higher temperature than will be used at LAWPS.

The report is applicable to LAWPS as it is based on essentially the same waste material that will be processed in LAWPS. The report provides support for use of Type 304/304L or Type 316/316L in high pH waste services, such as at LAWPS. The report supports that caustic stress corrosion cracking, pitting corrosion, or crevice corrosion should not be a problem for Type 304/304L or Type 316/316L in high pH LAWPS wastes, and that uniform corrosion rate should be less than 1 mpy

2.2.4 24590-WTP-RPT-M-11-002, **"WTP Materials Localized Corrosion Design Limits"**, Rev. 0, R. B. Davis and J. R. Devine, Bechtel, August 8, 2014 (Reference 10).

This report is a very thorough review of potential for localized corrosion with materials of construction that have been selected for WTP. The report provides limits on process conditions, such as chlorides and temperature.

Section 13:

> *"The purpose of this report is to provide the basis for the WTP material localized corrosion design limits placed on the materials used at WTP to ensure the operating life is not restricted by localized corrosion. The basis is generated from literature, experience, and testing. Numerous technical papers and reports have been reviewed and used to generate material localized corrosion design limits to protects against localized corrosion and conclude that there is an acceptable difference between documented failures and proposed material localized corrosion design limits which are provided in Tables 1-2, 1-3, and 1-4."*

This report focuses on materials of construction selection to protect against localized corrosion in WTP vessels and piping. The report also provides useful information on uniform corrosion and erosion, including corrosion/erosion rates and allowances.

WTP will process waste that has been treated by LAWPS, as well as other waste streams that originate from the Hanford Tank Farm. This report evaluated corrosion resistance in acidic (pH< 5), near-neutral (5<pH<10), and alkaline services (pH>10).

The report addresses high chloride ion concentrations that could potentially cause localized corrosion in austenitic stainless steels. The report finds that nitrate and hydroxyl ions are corrosion inhibitors that protect austenitic stainless steel from chloride ions and other oxidants. Nitrate and hydroxyl ions are filming inhibitors that protect by forming a polar monolayer barrier over the surface. If the concentration of nitrate and hydroxyl ions are sufficient, localized corrosion by chloride ions can be stopped because of the competitive nature of the ions for limited reaction sites. When the solution is acidic or near-neutral, nitrates have the more beneficial effect due to lack of hydroxide. At low pH with chlorides present, the nitrate inhibitive efficiency is defined as the minimum nitrate to chloride (NO_3^-/Cl^-) molar concentration ratio at which pitting corrosion is prevented. The minimum nitrate to chloride molar concentration ratio is material and temperature dependent.

2.3 Other Hanford and Savannah River Reports

2.3.1 WSRC-TR-2002-00427, "Corrosion Testing of Carbon Steel in Acid Cleaning Solutions",

B. J. Wiersma, K. H. Subramanian, September, 2002 (Reference 11).

This report presents the results of corrosion testing of carbon steel coupons in nitric acid solutions, oxalic acid solutions and mixed nitric acid / oxalic acid solutions.

2.3.2 WSRC-TR-2004-00109, "Corrosion Mechanisms and Rates for Carbon Steel and Stainless Steel Materials Exposed to Oxalic Acid", B. J. Wiersma, Savannah River Technology Center, Aiken, SC, March, 2004 (Reference 12).

This report presents the results of corrosion testing of carbon steel and stainless steel coupons in oxalic acid solutions at various temperatures and over various durations. The report concluded that carbon steel corrosion in 8% oxalic acid solutions is estimated to be about 100 mpy. For Type 304 and 316 stainless steel, the corrosion rates were very low (<1 mpy) at 35°C (95°F) and lower, and increased with increasing temperatures.

2.3.3 SRNL-STI-2016-00242, Revision 0, "LAWPS Mott Filter Electrochemical and Flow-Through Corrosion Tests, K. J. Imrich, J. I. Mickalonis, M. R. Duignan, D. T. Herman, M. L. Restivo, June 13, 2016 (Reference 13).

The report provides test results on corrosion of Type 316L porous metal filters (provided by Mott) such as will be used for the Cross Flow Filters at LAWPS. The electrochemical testing indicated that the Mott Type 316L filter was resistant to localized corrosion for a representative alkaline low activity waste (LAW) simulant and to the anticipated cleaning acid solutions of 0.45M nitric acid and 0.45M oxalic acid.

2.3.4 SRR-LWE-2011-00024, "Savannah River Site Tank Cleaning: Corrosion Rate for One Versus Eight Percent Oxalic Acid Solution - 11413", E. Ketusky, K. Subramanian and B. Wiersma, 20 Jan 2011, Waste Management Symposium 2011 (Reference 14).

This report provides test results for corrosion of carbon steel in oxalic acid solutions. The immersion coupon testing showed that the maximum time-averaged corrosion rate for a 1 wt% oxalic acid solution with sludge was less than 25 mpy for all conditions. For an agitated 8 wt% oxalic acid solution with sludge, the maximum time-averaged corrosion rate was about 30 mpy at 50°C, and 86 mpy at 75°C. If stagnant, the corrosion rate decreased to 24 mpy and 36 mpy, respectively. As such, the corrosion rates for 1 wt% oxalic acid with sludge are considered bounded by those for 8 wt% oxalic acid with sludge.

2.3.5 RPP-RPT-53523, Rev. 0, "Tank 241-C-105 Simulant Recipe Testing Effective Performance of a Cross-Flow Filter System for the Vacuum Mode Mobile Arm Retrieval System", S. J. Harrington, Washington River Protection Solutions, September, 2012. (Reference 22)

This report estimates properties of Hanford tank waste solids, based on simulant materials, and provides the basis for the solids hardness used for this Materials of Construction Evaluation.

3.0 ASSESSMENT METHODOLOGY

This report takes advantage of previous reports addressing materials of construction, corrosion and erosion issues at the Hanford Tank Farm and at WTP. Considerable research and evaluations have been performed on materials of construction selection for storing, transporting and treating essentially the same waste as will be treated in the LAWPS facility. Other available documents were also reviewed.

The piping and equipment were categorized into the systems based on similarity of corrosive and erosive properties of the fluids in each system. A system description is provided for each system, describing the fluid conditions and properties relevant to materials of construction. A discussion on possible materials of construction for each system is provided, and the recommended materials of construction and corrosion/erosion allowances.

General (uniform) corrosion, localized corrosion including pitting corrosion, crevice corrosion and stress corrosion cracking, and erosion were considered. The most important consideration for selection of materials for the waste processing streams was to ensure that the materials will not be susceptible to excessive localized corrosion, as this could lead to premature failure of equipment or piping. It should be noted that if pitting occurs in stainless steel, then pits continue to grow and pit growth will not stop if the conditions and environment stay the same. In carbon steel, pitting can be stopped in certain environments. Pitting can also initiate cracking in stainless steel.

Considering the 40 year life of the LAWPS facility, the hazardous nature of the materials handled, and the inaccessibility of the main process, the primary approach for this evaluation is one of conservatism. This conservative approach applies both to the recommendations of materials and to the corrosion/erosion allowances.

Cost was also a consideration, but a relatively minor one. Emphasis was placed on being certain that the material chosen for the specific applications met all the requirements for satisfactory performance over the 40 year LAWPS facility life.

When Type 304 and 316 stainless steel is recommended, dual certified stainless steel (Type 304/304L and Type 316/316L) is preferred due to the higher allowable stress, however use of non-dual certified stainless steel (Type 304L and Type 316L) are acceptable. The "L" stands for low carbon. This is necessary when welding the non-stabilized grades of the 300 series of stainless steel. When these alloys are at an elevated temperature for too long and/or cooled too slowly it is possible that the formation of chromium carbides could accumulate at the grain boundaries and cause a condition known as "sensitization". The use of the "L" grade prevents this. The non "L" grade has a tensile strength that is 5 ksi higher than the "L" grade due to its higher allowance of carbon. Dual certified stainless steel will have the higher tensile and yield strength and a carbon content low enough to prevent the formation of chromium carbides. For brevity, this report refers to Type 304/304L and Type 316/316L stainless steel, although non-dual stainless steel could be used also.

4.0 MATERIALS OF CONSTRUCTION EVALUATIONS BY SYSTEM

The piping and equipment can be categorized into the following systems for materials of construction evaluations. This categorization is solely for the purpose of recommending materials of construction based on similarity of corrosive and erosive properties.

4.1 Waste Processes and Piping in Which Waste pH is Always Over 12

4.1.1 System Descriptions

Waste Feed Pipeline from Tank Farm to LAWPS - Carrier Waste Transfer Piping

Waste is pumped from the Hanford Tank Farm (AP-107), through underground Double Containment Piping (DCP) to the FFT. The carrier (inner) piping contains the waste. The encasement (outer) piping provides secondary containment in the event of leaking of the carrier piping. The carrier piping will be periodically flushed with Treated Process Water (TPW) that is typically between 1 and 1.5 times the pipeline volume. The purpose of the flushing requirement is to remove solids from the pipeline.

This is Piping Specification P7.

The waste feed composition and operating conditions are provided in Table 1.

Table 1 – Waste Feed Composition and Operating Conditions

Chemical Components	Mole weight	Minimum Concentration (ppm)	Average Concentration (ppm)	Maximum Concentration (ppm)
Chloride, Cl^-	35.453	210	2,620	5,900
Fluoride, F^-	18.998	20	966	3,900
Nitrite, NO_2^-	46.0055	16,000	36,661	76,000
Nitrate, NO_3^-	62.0049	20,000	86,226	128,000
Free Hydroxide, OH^-	17.007	6,000	18,734	49,000
Sulfate, SO_4^{-2}	96.056	510	4,960	17,000
Reference for Minimum and Maximum Concentrations: Reference 15 Reference for Average Concentrations: Reference 27				

Density, gm/mL	1.28 (Reference 16, Table 3-4)
Operating Temperature:	The normal operating temperature for all piping and equipment in waste service during normal operations is between 68 and 113°F. The maximum operating temperature is 120°F. (Reference 16, Section 2.14.4, Item 11).
pH	The minimum pH of waste feed to LAWPS is 13.65. This is based on the minimum free hydroxide radical [OH-] concentration of 6,000 ppm, with a waste density of 1.28 gm/mL. The pH of the waste does not change as a result of the LAWPS process.
Solids Content:	Nominal Value 0.8% by weight; Maximum of 3.3% by weight.
Flow Rate	Maximum instantaneous = 76.4 gpm (based on MEB Case 2, Reference 18)
Velocity	Maximum in current design = 7.31 ft/s (based on MEB Case 2, Reference 18)

Waste Return Pipeline from FFT to Tank Farm - Carrier Waste Transfer Piping

Waste, with slightly concentrated solids content (maximum of 3.88% by weight), is pumped from the FFT by the DST Return Pumps back to the Tank Farm (AP-107) through an underground DCP pipeline. The maximum solids content is 3.88% by weight in the waste returned to AP-107 (versus 3.3% by weight in the FFT feed) because solids are concentrated in the CFF recirculation system, as permeate is removed by the CFF and the solids remain in the CFF recirculation system.

The carrier piping contains the waste. The encasement piping provides secondary containment in the event of leaking of the carrier piping. The carrier piping will be periodically flushed with TPW that is typically between 1 and 1.5 times the pipeline volume, for solids removal. The maximum operating temperature is 120°F.

This is Piping Specification P7.

Treated Waste Delay Tank (TWDT) and Lag Storage Tanks, Pumps and Piping

After the waste is treated in the CFF System to remove solids and in the IX System to remove ^{137}Cs, it flows to the TWDT and Lag Storage Tanks. The TWDT provides residence time to ensure accuracy of monitoring. The Lag Storage Tanks provide storage of waste for sampling and analysis prior to transfer to the WTP. The composition of the treated waste in this system is the same as the waste feed to LAWPS, except that the solids have been removed and the ^{137}Cs content is significantly reduced. Removal of solids eliminates any erosion concerns, and the reduction in ^{137}Cs content does not change the corrosion considerations. The maximum operating temperature is 120°F.

Piping in this system is Piping Specification P5.

Treated Waste Pipeline to WTP - Carrier Waste Transfer Piping

Treated waste is pumped from the Lag Storage Tanks to the WTP. Treated waste is pumped through an underground DCP pipeline to the WTP. The carrier piping contains the waste. The encasement piping provides secondary containment in the event of leaking of the carrier waste-carrying piping. The treated waste transfer pipeline will be periodically flushed with TPW that is typically between 1 and 1.5 times the pipeline volume. The composition of the waste in this system is the same as the waste feed to LAWPS, except that the solids have been removed and the ^{137}Cs content is significantly reduced. Removal of solids eliminates any erosion concerns, and the reduction in ^{137}Cs content does not impact the corrosion considerations. The maximum operating temperature is 120°F.

This is Piping Specification P7.

Neutralized Eluate Pipeline from the Cs Product Tank to the Tank Farm - Carrier Waste Transfer Piping

This piping will only see waste adjusted to a pH greater than 12 (pH of 13.4 per Reference 18) and TPW for flushing. The composition includes diluted waste, sodium salts and a large amount of hydroxide. The maximum operating temperature is 120°F.

This is Piping Specification P7.

4.1.2 Discussion of Materials Considered

Since the services above are all above pH 12, Type 304/304L and Type 316/316L are adequate. As will be discussed below, due to the high pH (high concentration of hydroxide ions), there is no potential for localized corrosion and minimal uniform corrosion. The more expensive alloys cannot be justified. In addition to Type 304/304L and Type 316/316L, carbon steel will be considered as it is significantly less expensive, and has been used successfully in the Hanford Tank Farm for high pH waste services.

4.1.2.1 Carbon Steel

Hanford has considerable experience with the use of carbon steel for storage of high level radioactive waste. To prevent this from occurring in the next generation carbon steel

DSTs, the tanks were fabricated with stress-relieved welds, and chemistry controls were implemented to maintain the waste at a high pH.

Research at Hanford and Savannah River Laboratories (References 3 and 4) predicted that SCC could be prevented by maintaining a high pH of the waste (>12) and post-weld heat treatment of the tanks.

Reference 7 evaluated the use of carbon steel for WTP waste services:

There is a higher propensity for Stress Corrosion Cracking (SCC) in carbon steel when the steel is in the hardened state. Low ratios of nitrite/nitrates accentuate this condition. When the report refers to heat treating the steel, it is referring to post weld heat treatment (PWHT) of the welds that join the tank sections. This higher hardness is due to the stresses produced in the weld metal and base metal heat affected zone (HAZ) as a result of the welding operation. The extent of these stresses is determined by several factors such as thickness, degree of restraint, cooling rate, carbon content, heat input, welding process, etc. Having these residual tensile stresses after welding in a susceptible atmosphere (low nitrite/nitrates ratio) can produce SCC. A properly performed PWHT will eliminate these stresses leading to much lower propensity for SCC.

Reference 6 evaluated corrosion and erosion of existing Hanford Tank Farm waste transfer piping and pipe fittings using ultrasonic testing (UT). Both carbon steel and 304 stainless steel piping was evaluated. Some forensic analyses performed in the laboratory (SEM) confirmed the results and also found no evidence of localized corrosion. The evaluation found "little to no evidence of corrosion or erosion within the waste transfer primary piping." Based on the worst-case piping wall loss rate, the evaluation determined the following as maximum corrosion/erosion rates for carbon steel carrier piping of 0.2 mpy.

Caustic Stress Corrosion Cracking (CSCC) is a potential problem for carbon steel in caustic services if the temperature is too high. The following Caustic Soda Service Chart (from Reference 6) shows the temperature that carbon steel can be used at for caustic services without risk of CSCC. To estimate an equivalent caustic concentration for the waste, it can be assumed that all of the hydroxide in the waste (both bound and unbound) is due to sodium hydroxide. The equivalent sodium hydroxide concentration is 3.57% by weight. At this concentration, CSCC will not occur at temperatures less than about 175°F. Nitrates also inhibit caustic stress corrosion cracking.

Figure 2 – Caustic Service Chart

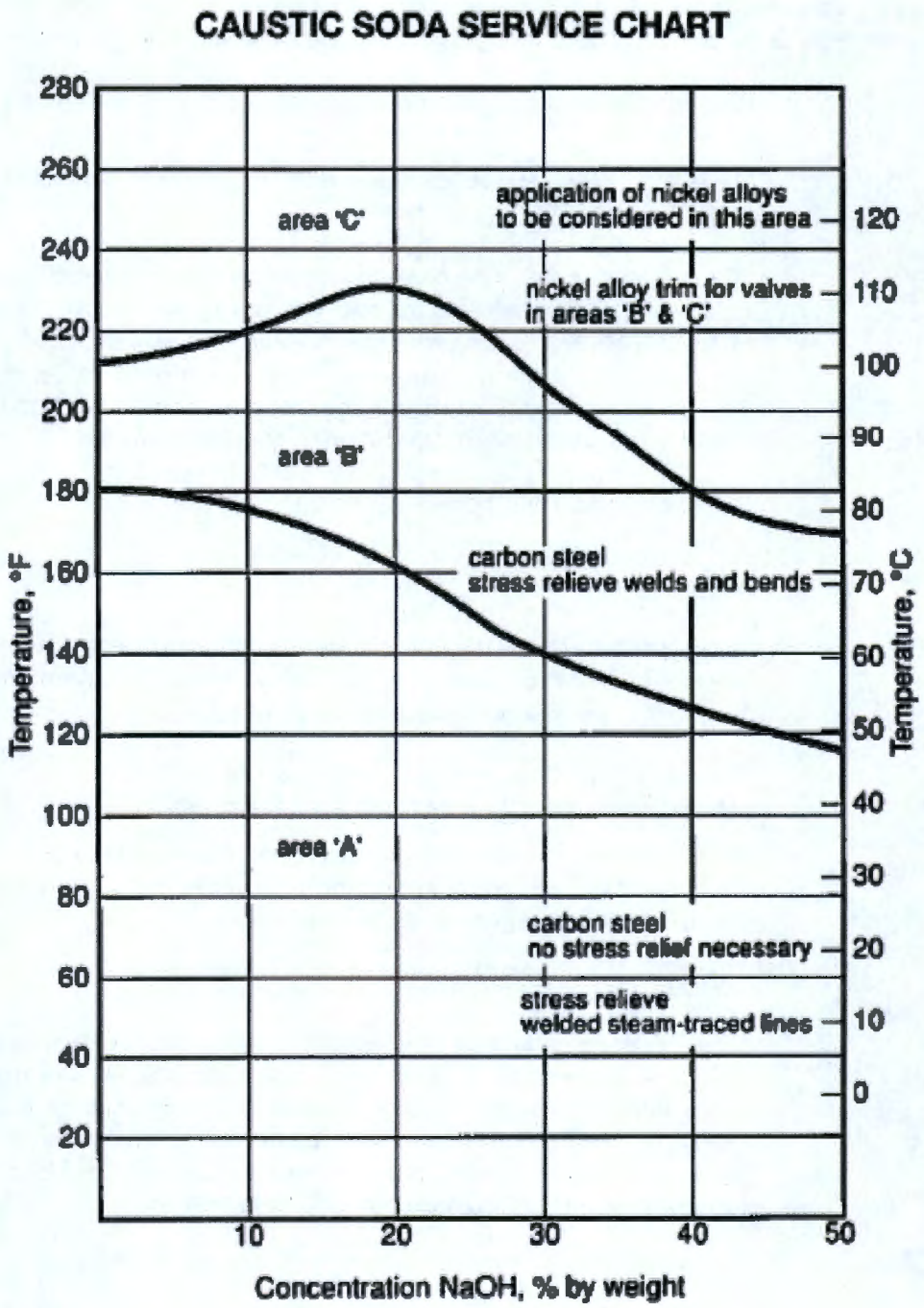

Source: *Corrosion Data Survey*, NACE, 1985

4.1.2.2 Type 304/304L and 316/316L Stainless Steel

Type 304L and 316L stainless steel have been selected for piping and some equipment services in the Hanford Tank Farm and for WTP for services similar to the high pH waste services at LAWPS. The following reports provide explanations for these selections:

- Reference 10, Section 2, describes the general approach to materials selection for WTP:

  "Type 304L, Type 316L, AL-6XN and Hastelloy C-22 are used for the majority of WTP vessels."

  "These materials are, in the order given, progressively more resistant to localized corrosion in acid and near-neutral solutions, as well as increasing in cost; all are resistant in alkaline conditions. The material choices allow engineers to reason that if conditions are more severe than those recommended for Type 304L, then Type 316L should be considered. If conditions are more severe than those, Type 316L can reasonably handle, then AL-6XN should be selected."

- Reference 7 evaluated the use of 304L and 316L stainless steel for waste service:

  Section 3:

  "Type 304L and Type 316L stainless steels have been selected for caustic processing vessels because they resist corrosion in sodium hydroxide solutions by forming a passive film that covers the surface."

- Reference 10 provided a more in-depth evaluation of 304L and 316L in waste services, considering the potential for localized corrosion in particular:

  For alkaline services (pH>10), the report determined that Type 304L and 316L are resistant to localized corrosion if the temperature and composition are controlled within design limits, as discussed below:

  Section 7.1:

  "The stainless steel surface is protected (i.e. passivated) at elevated pH, like the WTP pretreatment process. Corrosion is inhibited by the overwhelming concentration of OH- ions in the polarization layer that effectively blocks all other molecules. The OH- ions occupy surface sites and obstruct transport of aggressive anions, chlorides, and fluorides from reaching the oxide film and thereby reducing the film breakdown or "rupture" events."

  Section 10.3

  "The material localized corrosion design limits for Type 304L and Type 316L were conservatively selected from the above literature and test results. These alloys are resistant to localized pitting and crevice corrosion up to boiling. The chloride concentration and temperature influence depends on the hydroxide

concentration. The International Nickel Company and ASC Corrosion Handbooks indicate an absence of localized corrosion caused by chlorides up to boiling. The WTP testing showed an absence of localized corrosion up to boiling in a complex simulant. Danielson and Pittman tested Type 316L and Hastelloy C-22 at boiling and observed no localized corrosion. Work done at the University of Virginia and the Rebek summary paper discuss the ratio of chloride to hydroxide as a limit to indicate loss of passivity. A ratio up to 30 was indicated in testing. Testing at General Electric reported by Indig shows that CSCC is not an issue at the WTP operating conditions. This was also confirmed by WTP testing."

Section 1:

"Table 1-2 of this report shows the material localized corrosion design limits for the parameters listed in Table 1-2 and the corresponding temperature limits used in corrosion assessments for vessels and equipment made from 300 series stainless steels."

Table 2 – Localized Corrosion Design Limits for 300 Series Stainless Steel

Table 1-2 Localized Corrosion Design Limits for 300 Series Stainless Steel

Acidic pH < 5		Near Neutral 5 ≤ pH < 10			Caustic pH ≥ 10	
Temp (°F)	Cl^- / NO_3^- (molar)	Temp (°F)	Material	Cl^- (ppm)	Temp (°F)	Cl^- / OH^- (molar)
≤ 150	≤ 1.5	≤ 150	Type 304L	≤ 150	≤ 150	≤ 2
			Type 316L	≤ 300	150 < T ≤ 200	≤ 1

Note – the pH, temperatures, chloride, nitrate, and hydroxyl concentrations for a component will be specified in the corrosion evaluation for the component.

For high pH waste solutions, this table shows the difference in localized corrosion design limits for Type 304L and 316L. This indicates that in caustic solutions containing chlorides:

- Type 304L is resistant to localized corrosion up to 150°F if the Cl^-/OH^- molar ratio is equal to or less than 2.
- Type 316L is resistant to localized corrosion up to 200°F if the Cl^-/OH^- molar ratio is equal to or less than 1.

Based on the LAWPS waste feed composition, the maximum Cl^-/OH^- molar ratio is calculated using the highest chloride ion concentration and lowest hydroxide ion concentration:

Maximum chloride ion concentration = 5900 ppm Cl^-

Converting Cl^- to g-moles/L: $\frac{(5900 \text{ ppm } Cl^-)}{(1{,}000{,}000)} \times \frac{(1.28 \text{ gm/mL}) \times (1000 \text{ mL/L})}{(35.453 \text{ gm/g-mole})} = 0.213$ g-moles/L

Minimum hydroxide ion concentration = 6000 ppm OH^-

Converting OH^- to g-moles/L: $\frac{(6000 \text{ ppm } OH^-)}{(1{,}000{,}000)} \times \frac{(1.28 \text{ gm/mL}) \times (1000 \text{ mL/L})}{(17.007 \text{ gm/g-mole})} = 0.452$ g-moles/L

Maximum Cl-/OH- molar ratio = (0.213 g-moles/L Cl^-) / (0.452 g-moles/L OH^-) = 0.47

Because this ratio is less than 1.0:

- Type 304 should be completely resistant to localized corrosion for all LAWPS waste feed compositions and temperatures up to 150°F
- Type 316 should be completely resistant to localized corrosion for all LAWPS waste feed compositions and temperatures up to 200°F.

4.1.3 Recommendations for Materials of Construction

Based on the discussion above, carbon steel, Type 304/304L stainless steel or Type 316/316L stainless steel should all be adequate for waste processes and piping in which the waste pH is always over 12. The stainless steels will have a significantly higher corrosion resistance than carbon steel. Type 316/316L stainless steel has higher corrosion resistance than Type 304/304L stainless steel to most types of corrosion:

- Type 316/316L stainless steel is more resistant to pitting corrosion than Type 304/304L stainless steel. A measure of resistance to pitting corrosion called the pitting resistance equivalent number (PREN) has been developed. PREN is a theoretical way of comparing the pitting corrosion resistance of various types of stainless steels based on the chemical composition of the alloy. Higher PREN numbers indicate greater resistance to pitting corrosion. The most commonly used formula is as follows: (Reference 26)

  $$PREN = \%Cr + 3.3(\%Mo) + 16(\%N)$$

  For Type 304/304L stainless steel the range of PREN number is 18.0 to 20.0

  For Type 316/316L stainless steel the range of PREN number is 22.6 to 27.9

- In general, Type 316/316L stainless steel is more corrosion resistant to aqueous chloride-containing solutions than Type 304/304L stainless steel. (Reference 7, pages 8 and 21)

- Type 316L stainless steel is more resistant to CSCC initiation than Type 304L stainless steel because of the 2% to 3% added molybdenum. (Reference 9, page 9)

- As compared to Type 304/304L stainless steel, Type 316/316L stainless steel will better resist corrosion if the waste velocity falls below 3 feet per second or is stagnant.

Based on the considerations listed above, Type 316/316L stainless steel should be slightly more corrosion resistant than Type 304/304L stainless steel in waste processes and piping in which the waste pH is always over 12. Since high reliability for a 40 year service life is the most important consideration, Type 316/316L stainless steel is the recommended material of construction for all waste processing equipment and piping in which the waste pH is always over 12.

The only reason to consider carbon steel or 304/304L stainless steel instead of 316/316L stainless steel is a possible cost savings. Generally, the material cost of carbon steel is less than 304/304L stainless steel, and the material cost of 304/304L stainless steel is less than 316/316L stainless steel. It should be noted that there are other factors besides the raw material cost. For example, carbon steel may require a higher corrosion allowance and post-weld heat treatment. Additionally, the operating envelop would be reduced to the conditions satisfying both carbon steel and stainless steel corrosion criteria if carbon steel were used for the Lag Storage Tanks. Combining both materials (in waste service) in the same plant places an unnecessary burden on the technical and operating staffs.

Based on Revision 0 of the MOC Evaluation, WRPS provided direction (via LAWPS/PTCN 0013): "**Changing to carbon steel tanks would increase project risk in that the AY-102 root cause investigation may point to fabrication techniques unique to carbon steel tank fabrication as having contributed to the tank failure (e.g. stress relief and needed rework). Judgement is that the project schedule risk associated with the ongoing AY-102 root cause investigation is not worth the potential cost savings for carbon steel tanks. Recommendation is to stay with 316/316L stainless steel lag storage tanks.**"

4.1.4 Recommended Corrosion and Erosion Allowances

4.1.4.1 Carbon Steel

<u>Corrosion Allowance</u>

Reference 6 estimated a corrosion rate of 0.2 mpy for carbon steel pipelines in waste service; however the pipelines were in service less than 10% of the time. Also, the corrosion testing methodology used is not effective for evaluating localized corrosion such as pitting.

Reference 35 (Table 4-17) estimated remaining DST tank life based on the maximum credible liquid-vapor interface corrosion rate of 2.8 mils/yr.

Reference 38 documents and compares the first two rounds of ultrasonic testing inspections for the Hanford double-shell tanks (DST). The first inspections were performed from 1996 to 2006. The second round occurred from 2007 through the present. The ultrasonic testing data for the primary tank walls show no significant loss of wall thickness, and the walls are more than adequate to support their structural function. The average wall thickness values are still above the nominal plate thickness values specified in the original design for primary tank wall thicknesses.

Based on the above information, the most conservative estimate of corrosion rate for carbon steel in LAWPS waste service is 2.8 mils/yr. Assuming a corrosion rate of 2.8 mpy, the minimum corrosion allowance (CA) for a 40 year life is:

$$CA = 2.8 \text{ mpy} \times 0.001 \text{ inches/mil} \times 40 \text{ years} = 0.112 \text{ inches}$$

If the Lag Storage Tanks are fabricated with carbon steel, the recommended corrosion allowance is 0.125 inches (1/8"). This provides a design margin of 0.013 inches.

Erosion Allowance

The only place where carbon steel was considered for a waste service was for the Lag Storage Tanks. There are no significant solids in the Lag Storage Tanks, and therefore no erosion allowance would be required.

4.1.4.2 Types 304/304L and 316/316L Stainless Steel

Corrosion Allowance

Reference 6 estimates a corrosion rate of 0.2 mils/yr for stainless steel pipelines in waste service. Reference 8 estimates a more conservative corrosion rate of 0.6 mpy for Types 304/304L and 316/316L stainless steel in Hanford waste-caustic solutions. Using the more conservative estimate, the minimum corrosion allowance (CA) for a 40 year life is:

$$CA = 0.6 \text{ mpy} \times 0.001 \text{ inches/mil} \times 40 \text{ years} = 0.024 \text{ inches}$$

Erosion Allowance

If there are solids present, an erosion allowance should be added. Reference 8 develops equations for erosion rate, E, from a general equation:

$$E = aV^n d^p C^q$$

Where: V is the velocity, d is the particle diameter, and C is the slurry solids content expressed as a weight fraction. The other constants in this equation are dependent on the material type.

For mild steel, E_w (mm/yr):

$$E_{w(\text{carbon steel})} = 0.223V^{2.148}d^{0.344}C^{0.556}$$

Using the current maximum instantaneous velocity in the waste feed piping of 2.2 mps (7.31 fps), a mean particle diameter of 0.0075 mm (7.5 microns), and a maximum solids weight fraction of 0.0388 (3.88% weight): (References 16 and 21)

$$E_{w(\text{carbon steel})} = 0.223 \times (2.2)^{2.148} \times (0.0075)^{0.344} \times (0.0388)^{0.556} = 0.037 \text{ mm/yr} = 1.5 \text{ mpy}$$

For stainless steel, the erosion rate is 40% of the erosion rate for mild steel:

$$E_{w(\text{stainless steel})} = 0.40 \times E_{w(\text{carbon steel})} = 0.40 \times 1.5 \text{ mpy} = 0.60 \text{ mpy}$$

Calculating the minimum erosion allowance (EA) for a 40 year life is:

$$EA = 0.60 \text{ mpy} \times 0.001 \text{ inches/mil} \times 40 \text{ years} = 0.024 \text{ inches}$$

In addition to the methodology used in Reference 8, a qualitative assessment of erosion potential can be made based on velocity and the relative hardness of the particles to the material being eroded.

- Rated Velocity: 7.3 ft/s (Reference 20)
- Solids Concentration: 0 to 3.3 wt% (Reference 16, Table 3-4)
- Nominal Particle Size: 7.5 µm (Reference 16, Table 3-4)
- Particle Hardness: 2.5 to 6.5 Mhos (Reference 22, Table 1)
- Hardness of passive layer of chromium oxide on Type 316/316L stainless steel: 6.5 Mhos (Reference 19)

Since the maximum hardness of the solids particles is the same as the hardness of passive layer of chromium oxide on Type 316/316L stainless steel, and the velocity is not very high, very little erosion should be expected. This is consistent with the calculated erosion allowance of 0.024 inches over a 40 year life.

Combined Corrosion and Erosion Allowance

The combined minimum corrosion allowance and erosion allowance for Type 304/304L stainless steel or Type 316/316L stainless steel is:

CA + EA = 0.024 inches + 0.024 inches = 0.048 inches.

For in-plant waste processes and piping (Piping Specification P5) and waste transfer pipelines (Piping Specification P7), the recommended corrosion allowance/erosion is 0.0625 inches (1/16"). This provides a design margin of 0.014 inches.

4.2 Encasement Waste Transfer Piping

4.2.1 System Description

It is not expected that the encasement piping will be exposed to waste except in the event of a leak of the carrier pipe. If there is a leak, the leak should be detected within a relatively short period of time and repaired. Therefore, the encasement piping will normally be exposed only to air in the space between the carrier and encasement pipes. The maximum operating temperature is 120°F.

Reference 6 reported that the maximum corrosion rate for an encasement piping was 0.6 mpy, based on 33 years underground. All encasement piping evaluated have various forms of protective coatings, insulation and cathodic protection, and are buried at nominal depths of 2.5 to 4 ft. These parameters are all similar to the planned LAWPS waste transfer encasement piping.

This is Piping Specification P8.

4.2.2 Discussion of Materials Considered

Carbon steel is the only material considered for this service.

4.2.3 Recommendations for Materials of Construction

Carbon steel is the recommended material of construction

4.2.4 Protection of Exterior of Buried Waste Transfer Pipelines

The protection of buried waste transfer pipelines from external corrosion will be per the direction given from WRPS in 31269-17-RFI-001-R3, Response to LAWPS Request for Information, Cathodic Protection Requirements (Reference 25). Cathodic protection will not be used for these pipelines.

The pipelines will be protected from soil corrosion by fusion bonded epoxy dielectric coatings, polyurethane insulation, and fiberglass reinforced plastic (FRP) insulation jackets. These special coating features were adopted from the Association for Composite Tanks ACT-100, Specification for the Fabrication of FRP Clad Underground Storage Tanks.

WRPS provided a letter report prepared by DNV GL (Reference 31), which evaluated the Hanford buried waste transfer pipelines against the requirements of NACE SP0198-2010 and NACE SP-0169. The conclusions and recommendations of this letter report are applicable to LAWPS. Some excerpts from this letter report:

The strategy for protecting the carbon steel outer pipe from soil-side corrosion relies mainly on keeping the groundwater from contacting the steel surface. The steel is coated with fusion bonded epoxy (FBE) over most of the pipe surface with shrink sleeves at the girth welds, then encased in two-inch thick polyurethane foam insulation, and jacketed with a high density polyethylene (HDPE) outer barrier. The main purpose of the insulation is to provide mechanical support between the external and internal coating barriers to the piping. It is thought that such a three layer encasement would prevent water from contacting the pipe and thus would not require the application of cathodic protection. The annular space between the two co-axial pipes is leak tested continuously. There will also be periodic pneumatic testing of the annulus to ensure that leak pathways in the secondary piping do not exist.

A NACE Technical report on corrosion of thermally insulated, buried piping concluded that: (1) cathodic protection of insulated pipe was ineffective, (2) the primary corrosion protection for insulated, buried piping is a properly applied coating, and (3) routine inspection of corrosion, where practical, is necessary. The report mentioned that water ingress into the pipe through breaks in the external jacket at shrink sleeves occurred after a few years, and (4) a shop coated pipe, insulated with foam and covered by a polyethylene jacket corroded after about three years due to damage of the shop applied coating and water ingress from external joints.

CONCLUSIONS

Experience from the pipeline industry indicates that it is difficult to "water proof" a buried pipeline using the three-layer system. There will be defects in the field joints through which water, if present, can migrate. The polyurethane foam retains water and provides a crevice environment. The shop applied FBE coating is generally of high quality, but it is difficult to avoid holidays and the field joints can be vulnerable failure. The cathodic protection system for such a configuration

is also likely to be ineffective. However, for the transfer lines at Hanford, there may be mitigating circumstances that could enable management of the pipeline over extended time periods:

1. The external environment is relatively arid and the rainfall is low.

2. The pipe sits above the water table. However, low spots need to be investigated to ensure that water accumulation does not occur at these locations.

3. The annulus between the stainless steel inner pipe and the carbon steel outer pipe is periodically monitored using pneumatic tests.

4. Even if groundwater leaks into the annulus, the Type 316L stainless steel inner pipe is not likely to corrode. The galvanic contact between the carbon steel and the stainless steel will likely protect the latter, if there is sufficient water to contact both the metals.

RECOMMENDATIONS (with comments on applicability to LAWPS)

> *1. Perform field monitoring on the pipeline (e.g., a close interval survey, Direct Current Voltage Gradient (DCVG), etc.) to determine whether there are locations on the pipeline where holidays are present and there is evidence of external and or stray current corrosion.* (The DCP buried piping system is being provided with a leak detection system which will facilitate field monitoring.)

2. Mitigate any stray current corrosion and consider installing sacrificial anodes to mitigate other forms of external corrosion. An impressed current cathodic protection system for the entire pipeline is not recommended because of the shielding nature of the coating system. (Our interpretation of recommendation 2 is that it relates to existing pipelines, therefore it would not be applicable to our scope of work.)

3. Install instrumented coupons simulating the pipe coating configuration at locations where there is evidence of corrosion and at other locations where there is a higher likelihood of water penetration to the coating, such as low areas or on side slopes. (Our interpretation is that the installation of coupons would prove only the performance of the exterior FBE coating, which is not in question.)

Currently, the waterproofing for the DCP specification matches the description above except we are specifying a 200 mils thick Fiberglass-Reinforced Polyester (FRP) casing with a waterproof resin-rich liner in lieu of a HDPE jacket which matches the waterproofing system in W-211. W-211 uses a 200 mils thick Fiberglass-Reinforced Polyester (FRP) casing with a waterproof resin-rich liner. Regarding performance, FRP meets/exceeds the performance of HDPE in underground service.

4.2.5 Recommended Corrosion Allowances

Based on Reference 6, a corrosion rate of 0.6 mpy is recommended. The minimum corrosion allowance (CA) for a 40 year life is:

$$CA = 0.6 \text{ mpy} \times 0.001 \text{ inches/mil} \times 40 \text{ years} = 0.024 \text{ inches}$$

The recommended corrosion allowance is 0.0625 inches (1/16"). This provides a design margin of 0.038 inches.

4.3 Cross Flow Filter System

4.3.1 System Description

Waste is pumped from the FFT by the Filter Feed Pumps through the CFF recirculation loop to the CFFs and then back to the FFT. The velocity through the recirculation piping and the flow through the FFT are high enough to keep solids in suspension. The FFT has a partial jacket that uses chilled water to remove heat from the tank if necessary.

The CFFs remove solids from the waste using sintered metal tubes. The waste flows through the inside of the tubes, and the filtered waste (permeate) flows to the outside of the tubes and then to the Permeate Heat Exchanger and the Ion Exchange System. The CFFs may periodically be cleaned using NaOH, 0.45M nitric acid or oxalic acid, or by pulsing the CFFs with back pressure.

During normal operation the composition of the waste processed through this system is the same as the waste feed. The pH will be above 12, except when the system is being cleaned with nitric acid or oxalic acid. In addition to the waste feed (as described in Section 4.1) the CFF system will see the following materials during cleaning operations:

- Treated Process Water (TPW)
- 0.45M Nitric Acid
- 0.5M Oxalic Acid
- 0.10M Sodium Hydroxide
- 1.0M Sodium Hydroxide

0.45M nitric acid will normally be used to clean the CFFs, but oxalic acid may also be used. The concentration of oxalic acid to be used has not been finalized. The current assumption is that 0.5M (4.5% by weight, pH of 0.5) oxalic acid will be used.

The maximum normal operating temperature in this system is 120°F. There is a potential for higher temperatures due to loss of cooling water to the jacket when the system is in a recirculation mode. Assuming all worst case conditions the temperature in the Filter Feed Tank could rise to 170°F. Since this is a very unlikely event, and would not last very long (less than a day), the increased corrosion rate that could occur during this time is not significant for corrosion considerations.

Piping in this system is Piping Specification P5.

4.3.2 Discussion of Materials Considered

Carbon steel is not considered for this service, as corrosion rates in nitric acid and oxalic acid solutions are very high. References 11, 12, 13, and 14 all report high corrosion rates for carbon steel in nitric acid and oxalic acid solutions. Nitric acid is more corrosive than oxalic acid. Reference 11 reports that the corrosion rate for carbon steel in 0.3 M HNO_3 (slightly lower

concentration than the 0.45M nitric acid to be used at LAWPS) ranges from 384 to 569 mpy (1.05 to 1.56 mpd). Also, the corrosion of carbon steel by acid is accompanied by the evolution of hydrogen gas.

Based on References 8, 12 and 13, either Type 304L or Type 316L should be adequate for normal waste operations in the CFF System, and cleaning with nitric acid solutions, caustic solutions or oxalic acid solutions. No significant localized corrosion and very low general corrosion is expected. **Reference 12 reports that** ***"Stainless steel was shown to have an extremely low corrosion rate, less than 1 mil per year (to 8% oxalic acid)."*** If significantly higher concentrations of oxalic acid will be used additional evaluation may be required.

4.3.2.1 Localized corrosion design limits for solutions containing chlorides and nitrates

Although the waste should be removed from the CFF prior to addition of acids for cleaning, there is a potential for some waste remaining. In this case, the chloride content of the acid-waste solution could be a concern for localized corrosion. However, nitrate ions are protective in this environment if the nitrate ion concentration is adequate. Reference 10 provides specific localized corrosion design limits for solutions containing chlorides and nitrates in three pH ranges. Table 2 shows the localized corrosion design limits for 300 series stainless steel.

Based on the LAWPS waste feed composition, the maximum Cl^-/NO_3^- molar ratio is calculated using the highest chloride ion concentration and lowest nitrate ion concentration:

Maximum chloride ion concentration = 5900 ppm Cl^-

Converting Cl^- to g-moles/L: $\frac{(5900 \text{ ppm } Cl^-)}{(1{,}000{,}000)} \times \frac{(1.28 \text{ gm/mL}) \times (1000 \text{ mL/L})}{(35.453 \text{ gm/g-mole})} = 0.213 \text{ g-moles/L}$

Minimum nitrate ion concentration = 20,000 ppm NO_3^-

Converting NO_3^- to g-moles/L: $\frac{(20000 \text{ ppm } NO_3^-)}{(1{,}000{,}000)} \times \frac{(1.28 \text{ gm/mL}) \times (1000 \text{ mL/L})}{(62 \text{ gm/g-mole})} = 0.413 \text{ g-moles/L}$

Maximum Cl^-/NO_3^- molar ratio = (0.213 g-moles/L Cl^-) / (0.413 g-moles/L OH^-) = 0.52

Because this ratio is less than 1.5, either Type 304L or Type 316L should not experience localized corrosion in acid-waste solutions.

4.3.3 Recommendations for Materials of Construction

Either Type 304/304L stainless steel or Type 316/316L stainless steel should be adequate based on the discussion above. However, Type 316/316L stainless steel does have higher corrosion resistance than Type 304/304L stainless steel to most types of corrosion, as discussed in Section 4.1.3. Therefore, Type 316/316L stainless steel is recommended for this service.

4.3.4 Recommended Corrosion and Erosion Allowances

Corrosion Allowance

Based on Reference 8, a corrosion rate of 0.6 mpy is very conservative for Type 316/316L and Type 304/304L stainless steel for the Cross Flow Filter System.

The minimum corrosion allowance (CA) for a 40 year life is:

CA = 0.6 mpy x 0.001 inches/mil x 40 years = 0.024 inches

Erosion Allowance

The erosion in the CFF loop was evaluated based on the following considerations:

- Rated Velocity: 6.6 ft/s (Reference 21, Table 7.2)
- Solids Concentration: 0 to 3.88 wt% (Section 4.1.1 above)
- Nominal Particle Size: 7.5 µm (Reference 16, Table 3-4)
- Particle Hardness: 2.5 to 6.5 Mhos (Reference 23, Table 1)
- Hardness of passive layer of chromium oxide on Type 316/316L stainless steel: 6.5 Mhos (Reference 19)

For stainless steel, the erosion rate is 40% of the erosion rate for mild steel (same as calculated in Section 4.1.4).

$E_{w(\text{stainless steel})} = 0.40 \times E_{w(\text{carbon steel})} = 0.40 \times 1.5 \text{ mpy} = 0.60 \text{ mpy}$

The minimum erosion allowance (EA) for a 40 year life is:

EA = 0.60 mpy x 0.001 inches/mil x 40 years = 0.024 inches

No information could be found to estimate erosion of the CFF filter tubes. Paul Townson, an AECOM Senior Process Technologist with experience with sintered metal filters in applications similar to the LAWPS CFF provided the following information by email to Tom Nelson on 5/23/17:

> *I have worked with these porous metal filters for liquid/solid separation for over 20 years – but unfortunately do not have any erosion data for the porous media. Sellafield has used these filters since the late 1990's and I have never heard of a tube failing due to erosion. Actually, I have never heard of a tube failing. In their EARP plant they have 13 filter modules total, with ~400 tubes in each – so a lot of tubes! As I said on the phone, the filter tubes are not the pressure boundary so if a failure were to occur it would not be a safety issue, it would just contaminate the "clean" filtrate side. Recovery would be to simply flush out, and then change out the filter assembly for a new one. The only areas of concern would therefore be the slurry inlet piping and the dished end cap between the two filter passes, but neither of these areas see the high velocities seen in the filter tubes.*
>
> *The slurry flow path in EARP is very similar to LAWPS (except it is inverted) with slurry feeding into a central downcomer tube, then flow reversing and back up porous filter*

tubes arranged concentrically around the downcomer. The slurry in EARP is 10%wt solids, and can be higher, and is mainly an amorphous ferric hydroxide/oxide/oxyhydroxide type slurry. Much higher solids than LAWPS should be seeing.

The important points from this email are:

- Although no erosion data is available on 316L sintered metal filter tubes in service similar to the CFF, the experience of a subject matter expert is that erosion is not an issue.
- The filter tubes are not the pressure boundary, so if tube failed due to erosion, it would be an operational problem, but will not result in loss of waste confinement.
- The CFF Filters are designed for replacement of the filter tube bundle if failure due to erosion, or any other failure mechanism, were to occur.

Combined Corrosion and Erosion Allowance

The combined minimum corrosion allowance and erosion allowance for Type 304/304L or stainless steel Type 316/316L stainless steel is:

CA + EA = 0.024 inches + 0.024 inches = 0.048 inches.

For equipment, the recommended corrosion allowance is 0.0625 inches (1/16"). This provides a design margin of 0.014 inches.

The CFF waste piping with high solids content includes the 8" CFF recirculation piping, and the 2" piping connecting to the pipelines to/from AP-107. The LAWPS project made an early design decision to use Schedule 80S piping instead of Schedule 40S piping for the 8" CFF recirculation piping. The control valve in the 8" CFF recirculation piping is 6". The 8" x 6" reducers adjacent to the control valve will also be Schedule 80S piping. Using Schedule 80S piping instead of Schedule 40S piping provides conservatism in additional wall thickness: The additional wall thickness is 0.178 inches for 8" pipe.

4.4 IX System

4.4.1 System Description

This system includes the Permeate Heater Exchanger, the Ion Exchange Columns (IXC), the Back Pulse Tank, the Break Tanks, the Break Tank Pumps, and all associated piping.

The Permeate Heater Exchanger is a pipe-in-pipe heat exchanger that uses hot water (135°F) to heat the filtered waste (permeate) a maximum of 5°F, prior to treatment in the IXC in order to prevent most solids from precipitating.

The IXC are used to remove ^{137}Cs from the filtered waste. The composition of the waste flowing through the IXCs will be exactly the same as the waste feed from the Tank Farm (as per Section 4.1), except that the solids have been filtered out.

Periodically the ^{137}Cs is eluted from the IXCs ion exchange resin using dilute nitric acid. Following elution, the resin is regenerated using dilute sodium hydroxide. TPW is also used during the elution/regeneration process.

Therefore, in addition to high pH waste, the IXC will see the following materials:

- Ion exchange resin; spherical resorcinol-formaldehyde, (sRF)
- Filtered waste
- TPW
- 0.45M nitric acid
- 0.10M sodium hydroxide
- 1.0M sodium hydroxide

The maximum normal operating temperature in this system is 120°F. There is a potential for higher temperatures due to a power loss scenario resulting in operation of the Gas Removal System. If this occurs, the temperature in the IXCs, Break Tanks and Break Tank Pumps could rise to 155°F due to radiolytic heating. (Reference 17) Since this is a very unlikely event, and would not last very long, the increased corrosion rate that would occur during this time is not significant for corrosion considerations.

The effluent from the elution operations can either be routed to the Cs Product Tank, or can be routed to backflow through the Permeate Heat Exchanger and then backflow through the CFFs for cleaning of the CFFs.

Piping in this system is Piping Specification P5.

4.4.2 Discussion of Materials Considered

Because of the use of nitric acid to elute the IXCs, carbon steel cannot be used in this system.

Type 304/304L and Type 316/316L stainless steel are the only two materials of construction that are considered for this system.

4.4.3 Recommendations for Materials of Construction

The materials of construction considerations discussed in Section 4.3.3 for the CFF System are also applicable to the IX System. The main difference is there are no solids in the IX System. Type 316/316L stainless steel is recommended for the IX System.

4.4.4 Recommended Corrosion Allowance

Based on Reference 8, a corrosion rate of 0.6 mpy is very conservative for Type 316/316L stainless steel and Type 304/304L stainless steel for the IX System.

The minimum corrosion allowance (CA) for a 40 year life is:

CA = 0.6 mpy x 0.001 inches/mil x 40 years = 0.024 inches

The recommended corrosion allowance for this system is 0.0625 inches. This provides a design margin of 0.0385 inches.

No erosion allowance is required for this system as there are no solids.

4.5 Effluent Collection System

4.5.1 System Description

Liquids from elution and regeneration of the IXCs normally flow into the Cs Product Tank. The Cs Product Tank is also used to collect all drainage from radioactive control areas in the LAWPS facility. Contents of the Cs Product Tank are pumped to the DST System. Prior to pumping to the DST System, the following may be added to the Cs Product Tank:

- 19M sodium hydroxide to adjust the tank contents to a pH of 12
- 7.5M sodium nitrite (as corrosion inhibitor)
- TPW (for flushing)

The maximum operating temperature in this system is 120°F.

Piping in this system is Piping Specification P5.

The piping from the Cs Product Tank to the DST System is discussed above in Section 4.1 Treated Waste to WTP - Carrier Waste Transfer Piping.

4.5.2 Discussion of Materials Considered

Because of the use of nitric acid to elute the IXCs, carbon steel cannot be used in this system.

Type 304/304L stainless steel and Type 316/316L stainless steel are the only two materials of construction that are considered for this system.

4.5.3 Recommendations for Materials of Construction

The materials of construction considerations discussed in Section 4.3.3 for the CFF System are also applicable to the ECS. Type 316/316L stainless steel is recommended for the ECS System.

4.5.4 Recommended Corrosion Allowances

Based on Reference 8, a corrosion rate of 0.6 mpy is very conservative for Type 316/316L stainless steel and Type 304/304L stainless steel for this system.

The minimum corrosion allowance (CA) for a 40 year life is:

CA = 0.6 mpy x 0.001 inches/mil x 40 years = 0.024 inches

The recommended corrosion allowance for this system is 0.0625 inches. This provides a design margin of 0.0385 inches.

No erosion allowance is required for this system as there is no significant amount of solids.

4.6 Nitric Acid (HNO_3) System

4.6.1 System Description

This system includes the Nitric Acid Tanks, the Nitric Acid Pumps, and nitric acid piping. The maximum operating temperature in this system is 120°F.

4.6.1.1 Periodic use of the Nitric Acid Pumps and piping for Oxalic Acid

There currently is no oxalic acid system in the design; however oxalic acid may be used for cleaning of the CFFs. Reference 16 gives the following requirements for use of oxalic acid in LAWPS:

Section 2.4.7: "Capability to use other reagents for CFF cleaning, such as oxalic acid, will be provided. If other alternative reagents are selected (or different physical properties of previously selected reagents, such as pH, temperature, etc.), they will be evaluated for process and nuclear safety as well as compatibility with materials, waste, and the rest of the LAWPS design before they are approved for use in the facility"

Appendix C (31269-21-RFI-005): "LAWPS design will include a 0.5M oxalic acid connection for CFF cleaning. Oxalic acid will be used if required in the process."

It is anticipated that oxalic acid will be delivered by tank truck. The oxalic acid would be off-loaded and pumped using the Nitric Acid Pumps and piping. Therefore, the materials of construction for the Nitric Acid Pumps and piping need to consider periodic oxalic acid service (estimated to be no more than once per month for 24 hours).

Piping in this system is Piping Specification P4.

4.6.2 Discussion of Materials Considered

Only Type 304/304L stainless steel and Type 316/316L stainless steel are considered for this system.

4.6.3 Recommendations for Materials of Construction

The recommended material for piping and tanks in nitric acid service is Type 304/304L stainless steel. Type 304/304L stainless steel is considered the top choice for nitric acid service. Type 304/304L stainless steel is often referred to as "Nitric Grade Stainless Steel" in the chemical

processing industry. Type 316/316L stainless steel is not considered an upgrade in this application due to the molybdenum content of Type 316/316L stainless steel.

Reference 12 gives results from several testing programs for oxalic acid corrosion at different concentrations and different temperatures. Reference 12 reports that "Stainless steel was shown to have an extremely low corrosion rate, less than 1 mil per year (to 8% oxalic acid)." If significantly higher concentrations of oxalic acid will be used additional evaluation may be required.

4.6.4 Recommended Corrosion Allowances

Based on Reference 10, page 18, the maximum expected corrosion rate for Type 304/304L stainless steel in nitric acid service, at temperatures of 131°F or lower, is 0.4 mpy.

Assuming 12 days per year of oxalic acid service and 353 days per year of nitric acid service, the average annual corrosion rate will be:

$$(12/365) \times 1.0 \text{ mpy} + (353/365) \times 0.4 = 0.42 \text{ mpy}$$

The minimum corrosion allowance (CA) for a 40 year life is:

$$CA = 0.42 \text{ mpy} \times 0.001 \text{ inches/mil} \times 40 \text{ years} = 0.017 \text{ inches}$$

The recommended corrosion allowance for this system is 0.0625 inches (1/16"). This provides a design margin of 0.045 inches.

No erosion allowance is required for this system as there is no significant amount of solids.

4.7 Sodium Hydroxide (NaOH) System

4.7.1 System Description

The Sodium Hydroxide System includes tanks, electric tank heaters, tank agitators, pumps and piping to provide three different concentrations of sodium hydroxide solution:

- 19M NaOH
- 1.0M NaOH
- 0.1M NaOH

The maximum normal operating temperature in this system is 120°F.

The industry standard for the 19M (50%) sodium hydroxide is "Membrane Grade". The specification for Membrane Grade 19M sodium hydroxide is less than 0.01% wt (100 ppm) sodium chloride.

Piping in this system is Piping Specification P4.

4.7.2 Discussion of Materials Considered

Carbon steel and Type 304/304L or Type 316/316L stainless steel were considered for this system, however based on the discussion below, carbon steel will not be used for caustic service.

Figure 2 – Caustic Service Chart shows the limits for carbon steel in caustic service. For 19M NaOH (50% by weight), the maximum acceptable temperature without stress relieving is about 118°F. However, since all caustic piping will be electric heat traced (with local temperatures potentially over 118°F), all carbon steel piping (if it were used) should be stress relieved to prevent CSCC. Also, the electric tank heater elements temperatures could be relatively high (probably over 200°F), so these should be made of stainless steel.

4.7.3 Recommendations for Materials of Construction

It's possible that carbon steel could be used for the tanks for some cost savings, but the tanks may require post-weld heat treatment. Even though corrosion rates would be relatively low, some corrosion would be expected with carbon steel. Also, there may be some minor iron pickup in the NaOH using carbon steel.

The recommended material for NaOH service is Type 304/304L stainless steel. This is a conservative approach, and would apply to all components in the Sodium Hydroxide System.

A sodium chloride content of <100 ppm of the 19 M sodium hydroxide will not have any significant effect on corrosion of Type 304/304L stainless steel..

4.7.4 Recommended Corrosion Allowances

Based on Reference 10, page 18, the maximum expected corrosion rate for Type 304/304L stainless steel in sodium hydroxide service, at temperatures of 190°F or lower, is 0.2 mpy.

The minimum corrosion allowance (CA) for a 40 year life is:

CA = 0.2 mpy x 0.001 inches/mil x 40 years = 0.008 inches

The recommended corrosion allowance for this system is 0.0625 inches (1/16"). This provides a design margin of 0.054 inches.

No erosion allowance is required for this system as there is no significant amount of solids.

4.8 Sodium Nitrite ($NaNO_2$) System

4.8.1 System Description

This system consists of the 7.5M Sodium Nitrite Pump and sodium nitrite piping. The sodium nitrite will be provided in totes by others. The maximum normal operating temperature in this system is 120°F.

Piping in this system is Piping Specification P3.

4.8.2 Discussion of Materials Considered

The only material considered for this service is carbon steel.

4.8.3 Recommendations for Materials of Construction

The recommended material for sodium nitrite service is carbon steel. Sodium nitrite, at a concentration of 4000 ppm or higher as a fluid additive, is an excellent corrosion inhibitor for carbon steel. It will inhibit any aqueous corrosion of carbon steel. The concentration of 7.5M sodium nitrite is 398,000 ppm.

4.8.4 Recommended Corrosion Allowances

No significant corrosion is expected.

A minimum corrosion allowance of 0.0625 inches (1/16") is recommended.

4.9 Potable Water System

4.9.1 System Description

Potable Water is provided by the Hanford utility, MSA. Potable water is supplied to:

- Change Trailer
- Treated Process Water System (makeup water)
- Safety Shower / Eyewash System

The maximum operating temperature in this system is 113°F.

The chlorine content of the potable water in the distribution system is typically 0.3 to 0.7 ppm, with occasional spikes to just over 1.0 ppm. (Reference 32)This chlorine content is not high enough to cause corrosion issues with 304/304L stainless steel.

The potable water will not be stagnant anywhere in the system for any significant length of time. Therefore, microbially induced corrosion (MIC) will not be an issue

The underground piping in this system is Piping Specification P10. The above ground piping in this system is Piping Specification P6.

4.9.2 Discussion of Materials Considered

Carbon steel could be used, but considering the 40 year project life, and the fact that loss of potable water would result in a complete shutdown of the LAWPS facility, Type 304/304L stainless steel would be a better choice.

For underground potable water piping, PVC piping will be used, the same material as the MSA potable water piping.

4.9.3 Recommendations for Materials of Construction

Type 304/304L stainless steel is recommended for above ground piping and PVC is recommended for underground piping.

4.9.4 Recommended Corrosion Allowances

The corrosion rate for Type 304/304L in potable water service is negligible.

A minimum corrosion allowance of 0.0625 inches (1/16") is recommended.

No corrosion allowance is recommended for PVC piping.

4.10 Process Water System

4.10.1 System Description

The Process Water Systems includes:

- Treated Process Water (TPW) System:
  - Deionized Water System, which filters and deionizes the potable water to produce TPW.
  - The Treated Process Water Tank to store the TPW
  - The Treated Process Water Pumps and piping to distribute the TPW to the end users.
- Hot Water System
  - Hot Water Surge Tank, with electric heater
  - Hot Water Circulation Pumps and piping to/from the Permeate Heat Exchanger.
- Chilled Water System
  - Chilled Water Surge Tank
  - Water Chiller
  - Chilled Water Circulation Pumps and piping to/from the Filter Feed Tank jacket.

Piping in this system is Piping Specification P6.

The TPW is deionized water to a 0.2 MΩ purity, which could be increased to the 10 MΩ purity if necessary. The maximum operating temperature in this system is 120°F.

The Hot Water System is a closed loop system. The water is heated to 135°F, and is used to heat the waste in a pipe-in-pipe heat exchanger. There is very little water loss from this system (via the tank vent) and consequently very little TPW makeup. A biocide and corrosion inhibitor should be

periodically added to this system to prevent biological growth and corrosion. The biocide and corrosion inhibitor have not been selected at this time.

The Chilled Water System is a closed loop system. The water is cooled to 44°F, and is used to cool the waste in the Filter Feed Tank through the tank jacket. There is very little water loss from this system (via the tank vent) and consequently very little TPW makeup. A biocide and corrosion inhibitor should be periodically added to this system to prevent biological growth and corrosion. The biocide and corrosion inhibitor have not been selected at this time.

Piping in this system is Piping Specification P6.

4.10.2 Discussion of Materials Considered

Carbon steel is corroded by deionized water, and also results in reduction in the deionized water purity. Therefore carbon steel is not recommended.

Type 304/304L or Type 316/316L stainless steel are resistant to corrosion in deionized water.

4.10.3 Recommendations for Materials of Construction

Type 304/304L stainless steel is the recommended material of construction.

4.10.4 Recommended Corrosion Allowances

No significant corrosion is expected.

A minimum corrosion allowance of 0.0625 inches (1/16") is recommended.

4.11 Glycol Water System

4.11.1 System Description

This system is a closed-loop system that contains 50% water / 50% propylene glycol solution. The specific product that will be mixed with TPW is Dowfrost HD (Reference 23). This is primarily propylene glycol, and also contains corrosion inhibitors. Biocides are not required for this mixture of water and propylene glycol.

Piping in this system is Piping Specification P1.

4.11.2 Discussion of Materials Considered

Carbon steel is the material of construction that is typically used for these systems.

4.11.3 Recommendations for Materials of Construction

Carbon steel is the recommended material of construction.

4.11.4 Recommended Corrosion Allowances

The estimated corrosion rate for carbon steel in 50% water / 50% Dowfrost HD solution is 0.05 mpy (Reference 24).

The minimum corrosion allowance (CA) for a 40 year life is:

CA = 0.05 mpy x 0.001 inches/mil x 40 years = 0.002 inches

The recommended corrosion allowance for this system is 0.0625 inches (1/16"). This provides a design margin of 0.060 inches.

4.12 Fire Water System

4.12.1 System Description

The Fire Water System provides fire water to sprinklers and fire hydrants throughout the LAWPS facility.

The underground piping in this system is Piping Specification P10. The above ground piping in this system is Piping Specification P2.

There will be a fire water collection system for the Weather Enclosure and Lag Maintenance Area floors, which is not addressed in this evaluation. Refer to the Gravity Sanitary Sewer Specification, Document Number 12-2-006, CSI Section 33-30-00.

4.12.2 Discussion of Materials Considered

The underground fire water loop piping will be PVC. Where the fire water loop transitions above ground, the fire water piping will be cement lined ductile iron. The basis for this is NFPA 24, which requires ferrous metal fire water piping to be internally coated or lined. The main purpose of installing a cement/mortar lining to the interior wall of the pipe is to reduce the process of tuberculation (the forming of tubercles). The cement/mortar lining provides a barrier between the water and the pipe. It also reduces its susceptibility to corrosion. PVC is not used for above ground firewater piping because it can fail if exposed to extreme heat.

4.12.3 Recommendations for Materials of Construction

The recommended underground fire water piping is PVC. The recommended above ground fire water piping is cement lined ductile iron.

4.12.4 Recommended Corrosion Allowances

No corrosion allowance is required for either the PVC piping or cement lined ductile iron piping.

4.13 Compressed Air Systems

4.13.1 System Description

Compressed air is provided by the Air Compressors, Air Pre-Filters, Air Dryer, Air After-Filter and Air Receiver. The Air Receiver supplies two air distribution systems: the Instrument Air System and the Plant Air System. The air in both these systems is the same; air filtered and dried to a -40°F dew point. If the Air Receiver pressure drops too low, a valve will close in the plant air supply, to give priority to the instrument air system. The maximum temperature of this system is 135°F.

The piping in this system is Piping Specification P6.

Instrument air tubing is Piping Specification P12 (Type 316L stainless steel).

4.13.2 Discussion of Materials Considered

After the compressed air is dried (to a dew point of -40°F) carbon steel should be an adequate material of construction, as no significant corrosion should occur. However, experience with other instrument air systems at Hanford has been that water can get into the air distribution piping, resulting in corrosion and corrosion products. Therefore, WRPS requested that all compressed air piping be stainless steel, although the Air Receiver should be carbon steel (Reference 21). Type 304/304L stainless steel is adequate for the piping.

For instrument air tubing, Type 316L stainless steel is normally used.

4.13.3 Recommendations for Materials of Construction

The recommended materials for the Compressed Air System are:

- Carbon steel for the Air Receiver
- Type 304/304L stainless steel for the piping
- Type 316L stainless steel for the tubing

4.13.4 Recommended Corrosion Allowances

No significant corrosion is expected in this system.

The recommended corrosion allowance for the piping in this system is 0.0625 inches (1/16"). No corrosion allowance is required for the instrument air tubing.

4.14 Process Vents and HVAC Ventilation System

4.14.1 System Description

This system includes the supply and return HVAC piping in the pits and vaults, the vents from the waste-containing tanks and vessels, and the Demisters.

The HVAC ducts not in pits or vaults are HVAC Duct Specification H1.

The vents will be primarily air, with water vapor and small amounts of contamination from the waste in the tanks and vessels. The ventilation piping and ducts may have moisture condensing on the surfaces.

The piping in this system is primarily Piping Specification P9, although Piping Specification P5 is used the gas monitoring piping.

4.14.2 Discussion of Materials Considered

HVAC ducts are typically constructed from galvanized steel. An upgrade from galvanized steel is Type 304/304L stainless steel. The process vents will see a more corrosive environment due to the higher moisture content and waste contaminants. Therefore, Type 304/304L stainless steel piping should be used.

P5 was selected for the gas monitoring piping.

4.14.3 Recommendations for Materials of Construction

The recommended material for the HVAC Ventilation System is Type 304/304L stainless steel. Type 304/304L stainless steel will resist any corrosion expected in this system. P5 is recommended for the gas monitoring piping.

4.14.4 Recommended Corrosion Allowances

No significant corrosion is expected in this system.

The recommended corrosion allowance for this system is 0.0625 inches (1/16").

4.15 Tank Sample and Gas Monitoring Piping

4.15.1 System Description

This is piping and tubing that will be used to provide sample gas to flammable gas monitors from process tank. The gas will be primarily air, with water vapor and small amounts of contamination from the waste in the tanks and vessels.

The piping will be Piping Specification P5. The tubing in this system is Piping Specification P12.

4.15.2 Discussion of Materials Considered

The material in this system will be Type 316/316L stainless steel for the P5 piping and Type 316L stainless steel for the P12 tubing.

4.15.3 Recommendations for Materials of Construction

The recommended material for this system is Type 316/316L stainless steel for the piping and Type 316L stainless steel for the tubing..

4.15.4 Recommended Corrosion Allowances

No significant corrosion is expected, but a minimum 0.0625 inches corrosion allowance is recommended for the P5 piping. No corrosion allowance is recommended for the P12 tubing.

4.16 Fresh Resin and Spent Resin Systems

4.16.1 System Description

The Resin Handling System consists of two subsystems: Fresh Resin Subsystem and Spent Resin Subsystem. The resin, spherical resorcinol formaldehyde (sRF), is used to treat the Low Activity Waste (LAW) in two ion exchange (IX) columns. Cesium (Cs) is the main ion captured by the resin during loading operations.

Fresh resin is received in canisters and transferred to the Fresh Resin Tanks via gravity flow. The resin is pumped in a water slurry to the IX columns. Once the loading efficiency of the resin is significantly reduced that throughput requirements cannot be met, the resin, now called Spent Resin, is transferred to the Spent Resin subsystem as a water slurry. The Spent Resin is transferred to a High Integrity Container (HIC) where it is dewatered and prepared for disposal.

The piping in this system is Piping Specification P5.

4.16.2 Discussion of Materials Considered

Type 316/316L stainless steel is the only material of construction considered. This is the material of construction typically used for ion exchange resin systems.

4.16.3 Recommendations for Materials of Construction

The recommended material for both the Fresh Resin Subsystem and Spent Resin Subsystem is Type 316/316L stainless steel.

4.16.4 Recommended Corrosion Allowances

Since both the fresh resin and spent resin will be transferred in a water slurry (using TPW), no significant corrosion is expected. Since this is P5 piping, the recommended corrosion allowance for this system is 0.0625 inches.

No erosion allowance is recommended. This is because the resin is a much softer material than Type 316/316L stainless steel, and the frequency of flow through piping is infrequent. Therefore, no erosion is expected.

5.0 CONCLUSIONS AND RECOMMENDATIONS

The recommendations for the materials of construction are summarized in Table 4, Summary of Recommendations by System. This table shows the minimum required corrosion and erosion allowances, based on the discussions in Section 4, and the recommended corrosion and erosion allowances.

Table 5 shows the Summary of Recommendations by Piping Specification. The service descriptions are based on the Piping Material Index. In both tables, the corrosion and erosion allowances are applicable to both piping and equipment used for the service indicated.

These recommendations are valid only for the ranges of waste feed composition and operating conditions provided in Table 1. If the waste feed composition or operating conditions exceed the composition ranges or operating conditions provided in Table 1, additional evaluations may be required.

Table 3 - Summary of Recommendations by System

(Optional Recommendations are in Bold)

SYSTEM	SERVICES	PIPING SPECIFICATION	MATERIAL OF CONSTRUCTION	CALCULATED CORROSION ALLOWANCE	CALCULATED EROSION ALLOWANCE	MINIMUM CORROSION/ EROSION ALLOWANCE	RECOMMENDED CORROSION/ EROSION ALLOWANCE
	Waste Feed Pipeline from AP-107 to FFT Waste Return Pipeline from FFT to AP-107 (Carrier Piping)	P7	Type 316/316L Stainless Steel	0.024"	0.024"	0.048"	0.0625"
	Treated Waste Delay Tank and Lag Storage Tanks, Pumps and Piping	P5	Type 316/316L Stainless Steel	0.024"	0"	0.024"	0.0625"
	Treated Waste Pipeline to WTP (Carrier Piping)	P7	Type 316/316L Stainless Steel	0.024"	0"	0.024"	0.0625"
	Neutralized Eluate Pipeline from the Cs Product Tank to the Tank Far (Carrier Piping)	P7	Type 316/316L Stainless Steel	0.024"	0"	0.024"	0.0625"
Encasement Piping for Waste Transfer Pipelines	All Waste Transfer Pipelines (Encasement Pipe)	P8	Carbon Steel	0.024"	0"	0.024"	0.0625"
Cross Flow Filter (CFF) System	Filter Feed Tank, Filter Feed Pumps, Cross Flow Filters and Piping	P5	Type 316/316L Stainless Steel	0.024"	0.024"	0.048"	0.0625" (Also use Schedule 80S piping. See Section 4.3.4)
IX System	Permeate Heat Exchanger, Ion Exchange Columns, Back Pulse Tank, Break Tanks, Break Tank Pumps and Piping	P5	Type 316/316L Stainless Steel	0.024"	0"	0.024"	0.0625"
Effluent Collection System (ECS)	Cs Product Tank, Cs Product Pumps, Effluent Collection System and Piping	P5	Type 316/316L Stainless Steel	0.024"	0"	0.024"	0.0625"
Nitric Acid System	Nitric Acid Tanks, Nitric Acid Pumps and Piping	P4	Type 304/304L	0.017"	0"	0.017"	0.0625"

SYSTEM	SERVICES	PIPING SPECIFICATION	MATERIAL OF CONSTRUCTION	CALCULATED CORROSION ALLOWANCE	CALCULATED EROSION ALLOWANCE	MINIMUM CORROSION/ EROSION ALLOWANCE	RECOMMENDED CORROSION/ EROSION ALLOWANCE
			Stainless Steel				
Sodium Hydroxide System	19M, 1.0M and 0.1M NaOH: Tanks, Pumps and Piping	P4	Type 304/304L Stainless Steel	0.008"	0"	0.008"	0.0625"
Sodium Nitrite System	7.5M $NaNO_2$ Pumps and Piping	P3	Carbon Steel	0"	0"	0"	0.0625"
Potable Water System	Potable Water Distribution Piping, Safety Shower Water Storage Tank, Safety Showers (Above Ground)	P6	Type 304/304L Stainless Steel	0"	0"	0"	0.0625"
	Potable Water Piping (Underground)	P10	PVC	0"	0"	0"	0"
Process Water System	Treated Process Water System	P6	Type 304/304L Stainless Steel	0"	0"	0"	0.0625"
	Hot Water System	P6	Type 304/304L Stainless Steel	0"	0"	0"	0.0625"
	Chilled Water System	P6	Type 304/304L Stainless Steel	0"	0"	0"	0.0625"
Glycol Water System	Closed-loop Glycol Water Chiller, Pumps and Piping	P1	Carbon Steel	0.002"	0"	0.002"	0.0625"
Fire Water System	Underground Fire Water Loop Piping	P10	PVC	0"	0"	0"	0"
	Above Ground Piping	P2	Cement Lined Ductile Iron	0"	0"	0"	0"
Compressed Air System	Air Compressors, Air Pre-Filters, Air Dryer, Air After-Filter, Instrument Air Distribution Piping, Plant Air Distribution Piping	P6	Type 304/304L Stainless Steel	0"	0"	0"	0.0625"
	Air Receiver	N/A	Carbon Steel	0"	0"	0"	0.0625"

SYSTEM	SERVICES	PIPING SPECIFICATION	MATERIAL OF CONSTRUCTION	CALCULATED CORROSION ALLOWANCE	CALCULATED EROSION ALLOWANCE	MINIMUM CORROSION/ EROSION ALLOWANCE	RECOMMENDED CORROSION/ EROSION ALLOWANCE
	Instrument Air Tubing	P12	Type 316L Stainless Steel	0"	0"	0"	0"
Process Vents and HVAC System	Waste Process Vessel Vents, HVAC Supply and Return Ducts in Pits and Vaults, Demisters	P9	Type 304/304L Stainless Steel	0"	0"	0"	0.0625"
Tank Sample and Gas Monitoring Piping	Waste Tank Sample and Gas Monitoring Piping	P5	Type 316/316L Stainless Steel	0.024"	0"	0.024"	0.0625"
	Waste Tank Sample and Gas Monitoring Tubing	P12	Type 316L Stainless Steel	0"	0"	0"	0"
Fresh Resin and Spent Resin	Fresh and Spent Resin Piping, and Spent Resin Subsystem Equipment	P5	Type 316/316L Stainless Steel	0"	0"	0"	0.0625"

Table 4 - Summary of Recommendations by Piping Specification

(Service Descriptions are per Piping Material Index)SPECIFICATION DESIGNATION	SERVICE	MATERIAL OF CONSTRUCTION	RECOMMENDED CORROSION/EROSION ALLOWANCE
P1	Glycol Water Piping	Carbon Steel	0.0625"
P2	Above-Ground Fire Water Piping	Cement Lined Ductile Iron	0"
P3	7.5M Sodium Nitrite	Carbon Steel	0.0625"
P4	0.45M Nitric Acid	Type 304/304L Stainless Steel	0.0625"
	19M, 1M and 0.1M Sodium Hydroxide		
	Chemicals (services that could include sodium hydroxide, nitric acid, sodium nitrite or oxalic acid in aqueous solution)		
P5	In-Plant Waste without solids	Type 316/316L Stainless Steel	0.0625" (Also use Schedule 80S piping. See Section 4.3.4)
	Process Drains		
	CFF System		
	Fresh Resin and Spent Resin Piping		
	Waste Tank Sample and Gas Monitoring Piping		
P6	Chilled Water	Type 304/304L Stainless Steel	0.0625"
	Treated Process Water (TPW)		
	Hot Water		
	Condensate System		
	Fresh Resin		
	Compressed Air Piping (Instrument Air and Plant Air)		

(Service Descriptions are per Piping Material Index)SPECIFICATION DESIGNATION	SERVICE	MATERIAL OF CONSTRUCTION	RECOMMENDED CORROSION/EROSION ALLOWANCE
	Above Ground Potable Water		

SPECIFICATION DESIGNATION	SERVICE	MATERIAL OF CONSTRUCTION	RECOMMENDED CORROSION/EROSION ALLOWANCE
P7	Carrier Piping for Waste Transfer Piping: Waste Feed from AP-107, Waste Return to AP-107, Treated LAW, Cs Product Tank Return	Type 316/316L Stainless Steel	0.0625"
P8	Encasement Piping for Waste Transfer Lines	Carbon Steel	0.0625"
P9	Process Vents, Demisters, HVAC Supply and Return Air in Pits and Vaults	Type 304/304L Stainless Steel	0.0625"
P10	Underground Fire Water Piping Underground Potable Water Piping	PVC	0"
P12	Lag Tank Vent Sample System, Combustible Gas Monitors Instrument Air Tubing	Type 316L Stainless Steel	0"

6.0 REFERENCES

1. Deleted

2. Deleted

3. CH2M-32542-FP, Rev. 0, Inhibition of Stress Corrosion Cracking of Carbon Steel Storage Tanks at Hanford, C. Brossia, J. A. Beavers, M. P. H. Brongers, G. L. Edgemon, G. S. Frankel, B. Wiersma, H. Berman, L. Stock, K. D. Boomer, CH2M Hill Hanford Group, January 2007

4. RPP-34657-FP, Rev. 0, "A Study of Corrosion and Stress Corrosion Cracking of Carbon Steel Nuclear Waste Storage Tanks", K. D. Boomer, J. Beavers, C. Brossia, F. Gui, C. Scott, G. Edgemon, H. Berman, G. Frankel, CH2M Hill Hanford Group, September 2007

5. Deleted

6. RPP-RPT-52791, Rev. 0, "Tank Farm Waste Transfer System Fitness-for-Service Erosion and Corrosion Bases", J. K. Engeman, C. L. Giradot, E. R. Wilson, WRPS, J. S. Garfield and D. J. Washenfelder, AEM Consulting, LLC, November 9, 2015

7. 24590-WTP-RPT-M-01-001, "Materials Selection Report", Rev. 0, J. Devine, May 19, 2003

8. 24590-WTP-RPT-M-04-0008, "Evaluation of Stainless Steel and Nickel Allow Wear Rates in WTP Waste Streams at Low Velocities", S. W. Vail, May 26, 2010

9. 24590-WTP-RPT-ENG-11-154, "UFP System Elevated Temperature Materials Corrosion Testing", R. B. Davis, October 18, 2011

10. 24590-WTP-RPT-M-11-002, "WTP Materials Localized Corrosion Design Limits", Rev. 0, R. B. Davis and J. R. Devine, Bechtel, August 8, 2014

11. WSRC-TR-2002-00427, "Corrosion Testing of Carbon Steel in Acid Cleaning Solutions", B .J. Wiersma, K. H. Subramanian, September 2002

12. WSRC-TR-2004-00109, "Corrosion Mechanisms and Rates for Carbon Steel and Stainless Steel Materials Exposed to Oxalic Acid", B. J. Wiesma, Savannah River Technology Center, Aiken, SC, March, 2004

13. SRNL-STI-2016-00242, Revision 0, "LAWPS Mott Filter Electrochemical and Flow-Through Corrosion Tests, K. J. Imrich, J. I. Mickalonis, M. R. Duignan, D. T. Herman, M. L. Restivo, June 13, 2016

14. SRR-LWE-2011-00024, "Savannah River Site Tank Cleaning: Corrosion Rate for One Versus Eight Percent Oxalic Acid Solution - 11413", E. Ketusky, K. Subramanian and B. Wiersma, 20 Jan 2011, Waste Management Symposium 2011

15. 31269-05-RFI-011-R0, Response to LAWPS Request for Information "Confirmation of RPP-SPEC-56967", R. Russel, October 27, 2016

16. 31269-22-DBD-001, Low Activity Waste Pretreatment System Design Basis Document, Rev. 0, URS / Atkins / AREVA, Richland ,Washington

17. 31269-21-CALC-0057, "IX Recirculation Loop Heat and Evaporation Calculation", Rev. A, URS / Atkins / AREVA, Richland, Washington

18. 31269-21-CALC-0024, "LAWPS Mass and Energy Balance", Rev. 0, URS / Atkins / AREVA, Richland, Washington

19. NACE Corrosion Data Survey—Metals Section, 6th Edition, 1985, D.L. Graver, Editor, published by the National Association of Corrosion Engineers; Houston, TX 77084

20. 31269-21-CALC-0026, "Filter Feed Pump Sizing Calculation", Rev. 0, URS / Atkins / AREVA, Richland, Washington

21. Email from Brianna Atherton, Sept. 2, 2016, "Carbon vs Stainless Air system components"

22. RPP-RPT-53523, Rev. 0, "Tank 241-C-105 Simulant Recipe Testing Effective Performance of a Cross-Flow Filter System for the Vacuum Mode Mobile Arm Retrieval System", S. J. Harrington, Washington River Protection Solutions, September, 2012

23. Dowfrost HD Heat Transfer Fluid, Engineering Specifications for Closed-Loop HVAC Systems, Dow Chemical, 2002 (http://msdssearch.dow.com/PublishedLiteratureDOWCOM/dh_003e/0901b8038003e1ef.pdf?filepath=heattrans/pdfs/noreg/180-01273.pdf&fromPage=GetDoc)

24. Dow Answer Center, Answer ID 4808, LTTF - Corrosion Protection - DOWFROST and DOWFROST HD Fluids (http://dowac.custhelp.com/app/answers/detail/a_id/4808/~/lttf---corrosion-protection---dowfrost-and-dowfrost-hd-fluids)

25. 31269-17-RFI-001-R3, Response to LAWPS Request for Information "Confirmation of RPP-SPEC-56967", R. Russel, October 27, 2016

26. Penflex Engineering Bulletin: Calculating Pitting Resistance Equivalent Number (PREN) http://www.penflex.com/calculating-pitting-resistance-equivalent-number-pren/

27. RPP-SPEC-56967 Rev. 6, Project T5L01 Low Activity Waste Pretreatment System Specification, December 21, 2016

28. RPP-RPT-47337, Rev. 0, Specifications for the Minimization of the Stress Corrosion Cracking Threat in DST Wastes, L. M. Stock, A. J. Feero, J. R. Follett, WRPS, August 2011

29. RPP-RPT-58553, Rev. 6, LAWPS Safety Control Development and Design Integration, A. P. Jivelekas, Washington River Protection Solutions, December 5, 2016

30. LAWPS-PTCN-0013, Carbon Steel Lag Storage Tanks, January 26, 2017

31. Letter Report from DNV GL, Transfer Line Integrity Basis Assessment (Project Number: PP147774), Narai Sridhar and John Beavers, Det Norske Veritas (U.S.A.), Inc. (DNV GL), July 22,2016

32. Daily Chlorination Reports, Department of Energy 200W Section II and Section I (East Section), January 1, 2016 to December 31, 2016, Washington State Department of Health, Division of Environmental Health, Office of Drinking Water

33. RPP-RPT-58441, Rev. 1, Double-Shell Tank System Integrity Assessment Report (DSTAR), P. M. Giever and K. D. Boomer, WRPS, November 21, 2016

34. PNNL-13571, Expert Panel Recommendations for Hanford Double-Shell Tank Life Extension, C. W. Stewart, S. H. Bush, H. S. Berman, C. J. Czajkowski, J. R. Divine, G. J. Posakony, A. B. Johnson, M. R. Elmore, D. A. Reynolds, R. P. Anantatmula, R. L. Sindelar, P. E. Zapp, Pacific Northwest Laboratories, June 2001

35. RPP-28538, Rev. 5, Volume 1: IQRPE Double-Shell Tank Integrity Assessment Report HFFACO M-48-14, J. Huber, CH2M Hill Hanford Group, Inc., September 30, 2008

36. RPP-RPT-58301, Rev. 0, Summary of Initial Two Rounds of Double-Shell Tank Ultrasonic Testing, K. D. Boomer, J. R. Gunter, B. J. Vazquez, (WRPS), J. S. Garfield (AEM Consulting), May 2015

DOE/ORP-2016-01
Revision 0

Hanford Facility Dangerous Waste Part B Permit Application, Low Activity Waste Pretreatment System – Appendix 2, Volume 2

Prepared for the U.S. Department of Energy
Assistant Secretary for Environmental Management

Office of River Protection

P.O. Box 450
Richland, Washington 99352

Approved for Public Release;
Further Dissemination Unlimited

TRADEMARK DISCLAIMER

Reference herein to any specific commercial product, process, or service by tradename, trademark, manufacturer, or otherwise, does not necessarily constitute or imply its endorsement, recommendation, or favoring by the United States Government or any agency thereof or its contractors or subcontractors.

This report has been reproduced from the best available copy.

Printed in the United States of America

Approved for Public Release;
Further Dissemination Unlimited

APPENDIX 2 – VOLUME 2

DESIGN MEDIA

TABLE 2 – LAWPS DESIGN DRAWINGS

APPENDIX 2 – DESIGN MEDIA

Table A.2 LAWPS Design Drawings

Type	Drawing	Title
Process	H-16-000002	P&ID Equipment and Piping Symbols
Process	H-16-000003-1	P&ID Instrument Symbols and Valve Details
Process	H-16-000003-2	P&ID Instrument Symbols and Valve Details
Process	H-16-000004	P&ID Tagging Legend
Process	H-16-000010	LAWPS Process Flow Diagram – Main Process
Process	H-16-000011	LAWPS Process Flow Diagram – Lag Storage Tanks and Ventilation Exhaust
Process	H-16-000021	LAWPS P&ID AP Tank Farm Connections
Process	H-16-000022-1	LAWPS P&ID Filter Feed Tank Vault
Process	H-16-000022-2	LAWPS P&ID Filter Feed Tank Vault
Process	H-16-000023	LAWPS P&ID Cross Flow Filter Pit
Process	H-16-000024	LAWPS P&ID Back Pulse System (ON HOLD)
Process	H-16-000025	LAWPS P&ID IX Pit
Process	H-16-000026-01	LAWPS P&ID IX Valve Pits
Process	H-16-000026-02	LAWPS P&ID IX Valve Pits
Process	H-16-000027-01	LAWPS P&ID Cesium Tank Vault and Pits
Process	H-16-000027-02	LAWPS P&ID Cesium Tank Vault and Pits
Process	H-16-000027-03	LAWPS P&ID Cesium Tank Vault and Pits
Process	H-16-000028	LAWPS P&ID IX Treated Waste Delay Tank Pits
Process	H-16-000029	LAWPS P&ID IX Resin Sluicing, Dewatering, and Cranes
Process	H-16-000031	LAWPS P&ID Sumps
Process	H-16-000032	LAWPS P&ID LAG-TK-301 Lag Storage Tank
Process	H-16-000033	LAWPS P&ID LAG-TK-302 Lag Storage Tank
Process	H-16-000034	LAWPS P&ID LAG-TK-303 Lag Storage Tank
Process	H-16-000051	LAWPS P&ID Drains
Civil	H-16-000900	Site Plan
Civil	H-16-000903	Fencing Plan
Mechanical	H-16-001005	Equipment General Arrangement – Operating Floor Plan
Mechanical	H-16-001010	Equipment General Arrangement – Enlarged Floor Plan CFF/FT Damper Pit
Mechanical	H-16-001011	Equipment General Arrangement – Enlarged Floor Plan IX & Cs Damper Pit
Mechanical	H-16-001012	Equipment General Arrangement – IX Delay Tank and Pits
Mechanical	H-16-001013	Equipment General Arrangement – Enlarged Floor Plan LAG

Table A.2 LAWPS Design Drawings

Type	Drawing	Title
Mechanical	H-16-001014	Equipment General Arrangement Process Facility – Utility Rooms and Truck Access
Mechanical	H-16-001050	Equipment General Arrangement–Section A
Mechanical	H-16-001051	Equipment General Arrangement–Section B
Mechanical	H-16-001052	Equipment General Arrangement–Section C
Mechanical	H-16-001053	Equipment General Arrangement–Section D
Mechanical	H-16-001054	Equipment General Arrangement–Section E
Mechanical	H-16-001055	Equipment General Arrangement–Section F
Mechanical	H-16-001121	Filter Feed Pump CFF-P-103 Assembly DPD
Mechanical	H-16-001131	DST Return Pump CFF-P-102 Assembly DPD
Mechanical	H-16-001136	202LP-CFA-CFF-PV-101 Support Assembly DPD
Mechanical	H-16-001137	202L-CFA-CFF-PV-101 Frame Assembly DPD
Mechanical	H-16-001201-01	CFF Filter Module CFF-P-03 Assembly DPD
Mechanical	H-16-001201-02	CFF Filter Module CFF-P-03 Assembly DPD
Mechanical	H-16-001202-01	CFF Filter Module CFF-P-03 Filter Skid Assembly DPD
Mechanical	H-16-001202-02	CFF Filter Module CFF-P-03 Filter Skid Assembly DPD
Mechanical	H-16-001202-03	CFF Filter Module CFF-P-03 Filter Skid Assembly DPD
Mechanical	H-16-001203-01	CFF Filter Module CFF-P-03 Filter Frame Assembly DPD
Mechanical	H-16-001203-02	CFF Filter Module CFF-P-03 Filter Frame Assembly DPD
Mechanical	H-16-001203-03	CFF Filter Module CFF-P-03 Filter Frame Assembly DPD
Mechanical	H-16-001204	CFF Filter Module CFF-P-03 Valve Skid Assembly DPD
Mechanical	H-16-001205	CFF Filter Module CFF-P-03 Valve Skid Frame Assembly DPD
Mechanical	H-16-001206-01	CFF Filter Module CFF-P-03 CFF-EXCH-104 Assembly DPD
Mechanical	H-16-001206-02	CFF Filter Module CFF-P-03 CFF-EXCH-104 Assembly DPD
Mechanical	H-16-001206-03	CFF Filter Module CFF-P-03 CFF-EXCH-104 Assembly DPD
Mechanical	H-16-001207	CFF Filter Module CFF-P-03 CFF-EXCH-104 Frame Assembly DPD
Mechanical	H-16-001208	CFF Filter Module CFF-P-03 CFF-F-100 Assembly DPD
Mechanical	H-16-001209	CFF Filter Module CFF-P-03 CFF-F-100 Cartridge Assembly DPD
Mechanical	H-16-001210	CFF Filter Module CFF-P-03 CFF-F-101 Assembly DPD
Mechanical	H-16-001211-1	CFF Filter Module CFF-P-03 CFF-F-101 Cartridge Assembly DPD
Mechanical	H-16-001211-2	CFF Filter Module CFF-P-03 CFF-F-101 Cartridge Assembly DPD
Mechanical	H-16-001211-3	CFF Filter Module CFF-P-03 CFF-F-101 Cartridge Assembly DPD
Mechanical	H-16-001212-1	CFF Filter Module CFF-P-03 CFF-F-100 Filter Base DPD
Mechanical	H-16-001212-2	CFF Filter Module CFF-P-03 CFF-F-100 Filter Base DPD
Mechanical	H-16-001213-01	CFF Filter Module CFF-P-03 CFF-F-101 Filter Base DPD
Mechanical	H-16-001213-02	CFF Filter Module CFF-P-03 CFF-F-101 Filter Base DPD

Table A.2 LAWPS Design Drawings

Type	Drawing	Title
Mechanical	H-16-001275-01	CFF and FFT Pit/Vault LLP Equipment Interface
Mechanical	H-16-001275-02	CFF and FFT Pit/Vault LLP Equipment Interface
Mechanical	H-16-001275-03	CFF and FFT Pit/Vault LLP Equipment Interface
Mechanical	H-16-001275-04	CFF and FFT Pit/Vault LLP Equipment Interface
Mechanical	H-16-001280-01	Filter Tank Vault CFF-V-01 Tank CFF-TK-100 DPD
Mechanical	H-16-001280-02	Filter Tank Vault CFF-V-01 Tank CFF-TK-100 DPD
Mechanical	H-16-001280-03	Filter Tank Vault CFF-V-01 Tank CFF-TK-100 DPD
Mechanical	H-16-001280-04	Filter Tank Vault CFF-V-01 Tank CFF-TK-100 DPD
Mechanical	H-16-001280-05	Filter Tank Vault CFF-V-01 Tank CFF-TK-100 DPD
Mechanical	H-16-001280-06	Filter Tank Vault CFF-V-01 Tank CFF-TK-100 DPD
Mechanical	H-16-001311-01	IX-P-02 IX Pit Lead and Lag Column DPD
Mechanical	H-16-001311-02	IX-P-02 IX Pit Lead and Lag Column DPD
Mechanical	H-16-001312	IX-P-02 IX Pit Lead and Lag Column DPD
Mechanical	H-16-001900-1	Remote Valve Sleeved Assembly DPD
Mechanical	H-16-001900-2	Remote Valve Sleeved Assembly DPD
Mechanical	H-16-001901	Remote Valve Shaft Assembly DPD
Mechanical	H-16-001902	202LP-CFA-CFF-PV-101 Valve DPD
Mechanical	H-16-001903	Remote Pit Sleeved Assembly DPD
Mechanical	H-16-001908	FIT/PIT Instrument Support Assembly
Mechanical	H-16-001920	Tank Thermowell Typical Detail
Mechanical	H-16-001924-01	Remote Nut Sleeve Assembly
Mechanical	H-16-001924-02	Remote Nut Sleeve Assembly
Mechanical	H-16-001925	Jumper Nozzle Connection 2" Purex Kickoff Assembly
Mechanical	H-16-001926	Jumper Nozzle Connection 1" Purex Kickoff Assembly
Mechanical	H-16-001927	Jumper Nozzle Connection 3" Purex Kickoff Assembly
Mechanical	H-16-001928	Jumper Lifting Bail Assembly

DRAWING

H-16-000002

LAWPS P&ID EQUIPMENT AND PIPING SYMBOLS

LINES:

- PRIMARY PROCESS PIPING
- PIPING OR EQUIPMENT
- ELECTRICAL POWER OR SIGNAL
- PNEUMATIC INSTRUMENT SIGNAL (VARIABLE)
- CAPILLARY TUBE (FILLED SYSTEM)
- DCS (SOFTWARE) LOGIC CONNECTION
- HEAT TRACED
- VENDOR EQUIPMENT BORDER
- XX Y" — INSULATED PIPING
  - XX – PURPOSE OF INSULATION:
    - PF – FREEZE PROTECTION OR TO MAINTAIN PROCESS TEMPERATURE
    - CC – COLD CONSERVATION AND PREVENT CONDENSATION
    - PP – PERSONNEL PROTECTION
  - HOLD 1 Y" – THICKNESS OF INSULATION
- DOUBLE CONTAINMENT PIPING
- GUIDED RADAR SIGNAL
- HEAT TRACED AND INSULATED PIPING
- BUILDING / VAULT / PIT BREAK LINE

PUMPS AND BLOWERS:

- PROGRESSIVE CAVITY PUMP
- DIAPHRAGM PUMP
- SUBMERSIBLE SUMP PUMP
- CENTRIFUGAL FAN
- CENTRIFUGAL FAN WITH RADIAL VANE DAMPER
- BLOWER
- CENTRIFUGAL PUMP
- VACUUM PUMP
- PISTON PUMP
- POSITIVE DISPLACEMENT GEAR PUMP
- IN-LINE FAN
- TURBINE PUMP
- SUBMERSIBLE PUMP

HVAC SYMBOLS

- AIR OPERATED: MODULATING / TWO POSITION
- M — MOTOR OPERATED
- C — CHILLED WATER COIL
- DAMPER
- BACKDRAFT DAMPER
- INTAKE
- PRE FILTER — PRE-FILTER
- HEPA — HEPA FILTER
- AIR OUTLET
- AIR INLET
- M — MOTORIZED DAMPER
- 11 — EMBED IDENTIFIER
- ENGINEERED/EMBEDDED OPENING
- UNDUCTED CASCADE AIR
- HEATING ELEMENT (ELECTRIC)
- FS — FIRE SCREEN
- BS — HVAC BIRD SCREEN

VALVES:

- GATE
- GLOBE
- NEEDLE
- BUTTERFLY
- CHECK
- PLUG
- BALL
- 3-WAY BALL
- 3-WAY GLOBE
- WAFER CHECK VALVE
- 3-WAY PLUG
- INSTRUMENT ROOT VALVE
- KNIFE GATE
- VALVE MANIFOLD
- 1 — NOTE 1
  - FP FULL PORT
  - NC NORMALLY CLOSED
  - NO NORMALLY OPEN
  - NCLV NORMALLY CLOSED LOCKABLE VALVE
  - NOLV NORMALLY OPEN LOCKABLE VALVE

MISCELLANEOUS SYMBOLS:

- ELECTRICAL CONNECTION
- F — FILTER
- L — LUBRICATOR
- T — WATER TRAP OR AIR VENT
- WYE STRAINER
- JET (EJECTOR)
- REMOTE JUMPER CONNECTOR (3-WAY) — LETTERS SIGNIFY PORT IDENTIFICATION
- IN-LINE HEATER
- DMS — DEMISTER
- M — ROTARY MOTOR
- MCC — MOTOR CONTROL CENTER (ELECTRICAL SWITCH GEAR)
- MS — MOTOR STARTER (ELECTRICAL)
- VFD — VARIABLE FREQUENCY DRIVE
- BACK FLOW PREVENTER
- FLEX HOSE
- FLANGED CONNECTION
- PLUGGED OR CAPPED LINE
- CAPPED LINE (THREADED)
- REMOVABLE SPOOL
- DX — DIRECT EXPANSION COIL
- INDICATOR LIGHT (ALARM) (* – INDICATES COLOR)
  - COLOR LEGEND:
    - A–AMBER, G–GREEN, B–BLACK, R–RED, BL–BLUE, Y–YELLOW, W–WHITE
- CHEM JOINT
- RUPTURE DISK
- BASKET STRAINER
- DUPLEX BASKET STRAINER
- BREATHER — BREATHER FILTER (HEPA)
- CARBON — CARBON ADSORBER
- VACUUM BREAKER
- UNION
- SWAGE
- MPS — EXISTING MASTER PUMP SHUTDOWN SYSTEM. MPS RELAY NO.: TBD
- MUF — MUFFLER
- T/P X — TIE-IN (PROCESS/MECHANICAL)
- T/E X — TIE-IN (ELECTRICAL)
- T/I X — TIE-IN (I & C)
- EQUIPMENT INSULATION
- EQUIPMENT INSULATION HEAT TRACED
- AG — ABOVE GROUND
- UG — UNDER GROUND
- AIR LINE OILER
- FLANGED RESTRICTING ORIFICE CONNECTION
- HOSE CONNECTION WITH PLUG
- PIPE PLUG
- FILTER — FILTER
- FLOOR DRAIN
- DRAIN PLUG
- BLIND FLANGE
- MH OR HH — MANHOLE OR HAND HOLE
- CONCENTRIC REDUCER (SIZE DEFINED ON P&ID)
- ECCENTRIC REDUCER (SIZE DEFINED ON P&ID)
- SOLID ARROW ON/OFF PAGE CONNECTOR (NO ASSOCIATED DRAWING)
- SOLID ARROW ON/OFF PAGE CONNECTOR (NO ASSOCIATED DRAWING)
- OFF-PAGE CONNECTOR (OPC) DRAWING CONTINUATION ARROW USED ONLY FOR LINES ENTERING OR EXITING THE FACE OF THE DRAWING
  - ENTERING OPC — CONTINUATION DWG — DWG ZONE LOCATION
  - EXITING OPC — DWG ZONE LOCATION — CONTINUATION DWG
  - BI-DIRECTIONAL OPC
  - BI-DIRECTIONAL OPC
- TANK / RECEIVER (DISHED HEAD / BOTTOM)
- TANK (FLAT HEAD)
- TANK (FLAT BOTTOM, CONICAL ROOF)
- ION EXCHANGE COLUMN
- TANK (CONE BOTTOM)
- 55 GALLON DRUM
- AGITATOR
- MIXING EDUCTOR
- EJECTOR
- CRANE
- SAMPLER
- BOTTLE
- QUICK DISCONNECT
- END OF GROUP/PIPE RUN
- PIPING MATERIAL BREAK
- HEAT TRACING OR DOUBLE CONTAINMENT PIPING BREAK
- INSULATION BREAK
- EXPANSION JOINT
- HAND WHEEL
- JUMPER CONNECTION
- SPRAY NOZZLE
- P-TRAP
- GOOSENECK VENT
- TANK VENT/OVERFLOW BIRD SCREEN
- SLOPE
- FAN PROPELLER
- VORTEX BREAKER
- SPECTACLE BLIND (CLOSED)
- SPECTACLE BLIND (OPEN)
- SIGHT FLOW INDICATOR
- FLOW CONDITIONER
- AIR COOLED CONDENSER
- INTERNAL HEATING ELEMENT
- HEAT EXCHANGER (PFD ONLY)
- PIPE IN PIPE EXCHANGER
- CONTROL PANEL — CHILLER
- 2-PASS CROSS FLOW FILTER
- CONCRETE
- STEEL
- XXX XXX — SYSTEM BREAK
- SAFETY SHOWER / EYEWASH
- DRIP PAN
- CARTRIDGE FILTER
- CARBON — CARBON FILTER
- MISCELLANEOUS PACKAGED SYSTEM / EQUIPMENT SEE TEXT DESCRIPTOR

FIRE PROTECTION SYMBOLS:

- FIRE HYDRANT
- GATE VALVE WITH TRENCH ADAPTER
- GATE VALVE WITH POST INDICATOR
- ALARM CHECK VALVE
- DRY PIPE VALVE
- FIRE DEPARTMENT CONNECTION
- FIREWATER FLOW SWITCH
- FACP — FIRE ALARM CONTROL PANEL
- FIRE SPRINKLERS
- E — ENCLOSURE ELECTRIC HEATER

NOTES:

1. NOLV AND NCLV VALVES MAY HAVE SPECIAL REQUIREMENTS. SEE LAWPS VALVE LIST, 31289-16-LST-002, FOR NORMAL POSITION OF THESE VALVES AND THE REASON FOR THE POSITION.

HOLDS:

1. ALL INSULATION THICKNESSES TO BE VERIFIED PENDING REV. 0 ISSUE OF THE THERMAL INSULATION OF PIPING, VESSELS AND EQUIPMENT SPECIFICATION.

REVISION APPROVAL RECORD					REV 1
DISCIPLINE	BY	DATE	DISCIPLINE	BY	DATE
ARCH.	N/A		MECHANICAL	DS	05/15/17
BUILDING SERVICES	WL	05/15/17	PIPING	MJ	05/15/17
CIVIL	N/A		PROCESS	MW	05/15/17
ELECTRICAL	LC	05/15/17	QA / QC	PB	05/15/17
ENVIRON.	N/A		STRUCTURAL	N/A	
GEN. ARRANG.	N/A		FP	KB	05/15/17
I & C	HF	05/15/17			

DRAWING STATUS				
ISSUED	REV	DATE	SDE	PEM
PRELIMINARY				
RE-APPROVED FOR DESIGN	1	05/15/17	MW	MS For DP

NOT APPROVED FOR CONSTRUCTION UNLESS SIGNED AND DATED. DESTROY ALL PRINTS BEARING EARLIER DATE AND/OR REV.NO.

AECOM
URS ENERGY & CONSTRUCTION Inc. - an AECOM Company
ATKINS
AREVA

AECOM PROJECT NO.: 31289

DWG NUMBER	TITLE
DRAWING TRACEABILITY LIST	

REF NUMBER	TITLE
REFERENCES	
NEXT USED ON	H-16-000001

REV	DESCRIPTION	ORIG	CHK	APVD	IDV	DATE
1	RE-APPROVED FOR DESIGN	MB	TN	MW	N/A	05/15/17
0	APPROVED FOR DESIGN	MB	TN	MW	N/A	09/19/16

REVISIONS

MARK G WOODWARD, STATE OF WASHINGTON, 51519, REGISTERED PROFESSIONAL ENGINEER — 5/15/17 — For Permits

BLDG. NO. 202LP

INDEX NO. 7004

CAUTION: NOT COMPLETE WITHOUT CURRENT CHANGE DOCUMENTS FROM DATABASE

ATTENTION: DESTROY THIS DOCUMENT BY SHREDDING MAY CONTAIN SENSITIVE INFORMATION

NAME	DATE
DRAWN BY	
DRAWING APPROVAL	
DISCIPLINE ENGINEER	
ENGINEER	

U.S. DEPARTMENT OF ENERGY
Office of River Protection

LAWPS
P&ID EQUIPMENT AND PIPING SYMBOLS

SIZE F | DRAWING NUMBER H-16-000002 | SHEET 1 | REV 1

SCALE NONE

PLOTTED

ISSUED FOR 90% DESIGN
NOT FOR CONSTRUCTION

DRAWING

H-16-000003-1

LAWPS P&ID INSTRUMENT SYMBOLS AND VALVE DETAILS

MEASURING ELEMENTS:

- FLOW ORIFICE
- LEVEL GAGE GLASS, FLOAT, MAGNETIC, DISPLACEMENT OR DIFFERENTIAL-PRESSURE TYPE LEVEL INSTRUMENTS (L( ) XX) — XX - INDICATES THE TYPE
- VARIABLE AREA FLOW METER (ROTAMETER) (F( ))
- FLOW INDICATOR VALVED (ROTAMETER WITH ATTACHED VALVE) (FI)
- TEMPERATURE ELEMENT (WITH WELL) (TW TE)
- INLINE FLOW INSTRUMENT XX - METER TYPE (F( ) XX)
- PITOT OR PITOT- VENTURI TUBE FLOW METER
- AVERAGING PITOT TUBE FLOW METER
- DIRECT CONNECTED PRESSURE SENSOR (P( ))
- PRESSURE SENSOR WITH DIAPHRAGM SEAL, PIPED (P( ))

MISCELLANEOUS SYMBOLS:

- DIAPHRAGM SEAL
- LEVEL ELEMENT / LEAK DETECTION ELEMENT
- RUPTURE DISK (PRESSURE RELIEF)
- BELL (ALARM)
- TEMPERATURE SENSING ELEMENT
- RADIATION SENSING ELEMENT
- INLINE RADIATION ELEMENT
- ALARM HORN
- AIRSET
- GWR RADAR LEVEL SENSOR
- NCR RADAR LEVEL SENSOR (1)
- TURBINE OR PROPELLER FLOW METER
- GENERIC FLOW METER
- CORIOLIS FLOW METER
- FLOW NOZZLE
- ULTRASONIC FLOW METER
- VIDEO CAMERA (TV)
- VORTEX METER NOTE 9 (1)
- CCTV CAMERA (CCTV)
- MAGNETIC FLOW METER NOTE 10 (1) (M)
- PRESSURE OR VACUUM RELIEF (ANGLE PATTERN)
- INLINE PRESSURE OR VACUUM RELIEF
- 3-VALVE INSTRUMENT MANIFOLD
- INSTRUMENT INSTALLED IN A VALVE BODY (1)

I ORF O (R) CONVENTIONAL

RELIEF VALVE WITH DETAILS: (PSV)

- I INLET SIZE
- ORF ORIFICE SIZE
- O OUTLET SIZE
- (R) RELIEF CONDITION NOMENCLATURE:
  - F = FIRE
  - B = BLOCKED OUTLET
  - C = CONTROL FAILURE
  - P = PROCESS
  - M = MECHANICAL FAILURE
  - T = THERMAL EXPANSION
  - R = REVERSE FLOW

PILOT OPERATED RELIEF VALVE (PSV P)

VALVE ACTUATORS:

- DIAPHRAGM OPERATED
- DIAPHRAGM OPERATED WITH HANDWHEEL
- HAND OPERATED OR HANDWHEEL
- PNEUMATIC PISTON (SINGLE ACTING)
- PNEUMATIC PISTON WITH HANDWHEEL
- PNEUMATIC PISTON (DOUBLE ACTING)
- MOTOR OPERATED (M)
- MOTOR OPERATED VALVE W/ MANUAL OVER-RIDE (M)
- AIR OPERATED (A)
- SOLENOID (S)
- 3-WAY SOLENOID (S)
- 4-WAY SOLENOID (S)
- 4-WAY DUAL SOLENOID (S S)
- BACK PRESSURE REGULATOR (SELF CONTAINED)
- PRESSURE REDUCING REGULATOR (SELF CONTAINED)
- PRESSURE REDUCING REGULATOR WITH EXTERNAL PRESSURE TAP
- BACK PRESSURE REDUCING REGULATOR WITH EXTERNAL PRESSURE TAP
- DIAPHRAGM OPERATED W/ POSITIONER (IA)
- PNEUMATIC PISTON (SINGLE ACTING) W/ POSITIONER (IA)

INSTRUMENT SYMBOLS:

- PRIMARY ELEMENT OR LOCALLY MOUNTED INSTRUMENT
- ANNUNCIATOR CABINET OR PANEL MOUNTED INSTRUMENT
- INSTRUMENT MOUNTED ON BACK OF PANEL (INACCESSIBLE)
- INSTRUMENT MOUNTED AT AN AUXILIARY LOCATION
- INSTRUMENT MOUNTED AT AN AUXILIARY LOCATION (INACCESSIBLE) (1)
- RELAY (K)
- POWER RELAY (Y)
- HARDWARE INTERLOCK (I)
- COMPUTER INPUT / OUTPUT
- STATUS LIGHT, BEACON W = WHITE, R = RED, G = GREEN (W)
- SOFTWARE INTERLOCK (I)
- CONTROLLER (YYC FOR DCS PLC FOR PLC)
- DCS SHARED DISPLAY NOT NORMALLY ACCESSIBLE
- DCS MONITORING FUNCTION ACCESSIBLE IN AUXILLARY LOCATION (PANEL HMI)
- DCS CONTROL OR MONITORING FUNCTION ACCESSIBLE TO THE OPERATOR

NOTES:

1. LOOP NUMBERS FOR TAGS ARE TAKEN FROM THE VALVE TAG, AS SHOWN ON EACH P&ID THAT REFERENCES THIS DETAIL
2. INTERLOCK NUMBER AND PROPER SYMBOL (DCS OR PLC) WILL BE SHOWN ON PROCESS P&ID.
3. FOR VALVES LOCATED IN PITS WITH EXTENDED VALVE STEMS / ACTUATORS, LIMIT SWITCH AND POSITIONER WILL BE LOCATED OUTSIDE THE PITS.
4. SAFETY SOLENOID VALVE (SY) IS TO TRIP THE VALVE TO ITS FAILURE POSITION.
5. REMOTELY MAINTAINABLE MODULATING CONTROL VALVES WILL UTILIZE A PNEUMATIC PISTON ACTUATOR.
6. ACTUATOR TYPE (SINGLE ACTING, DOUBLE ACTING, ETC.) AND SOLENOID TYPE (3-WAY, 4-WAY, ETC.) WILL BE SPECIFIED ON THE INDIVIDUAL VALVE DATASHEETS.
7. FOR COMPLETE CONTROLS AND STATUS INDICATIONS OF MOTORS, CONTROL STATIONS, AND VFDS, SEE I/O LIST DOCUMENT 31269-19-LST-0002.
8. EVERY SAFETY PLC ANALOG INPUT SIGNAL IS ALSO WIRED VIA A SIGNAL SPLITTER TO AN ANALOG INPUT IN THE DCS FOR MONITORING AND DIAGNOSTICS. (1)
9. 10X STRAIGHT PIPE DIAMETERS (10D) UPSTREAM AND 5D DOWNSTREAM OF FLOWMETER ARE REQUIRED.
10. 5X STRAIGHT PIPE DIAMETERS (5D) UPSTREAM AND 2D DOWNSTREAM OF FLOWMETER ARE REQUIRED.

INSTRUMENT SYMBOL LETTER IDENTIFICATION TABLE

SYMBOL	FIRST LETTER: MEASURED OR INITIATING VARIABLE	FIRST LETTER: MODIFIER	SUCCEEDING LETTERS: READOUT OR PASSIVE FUNCTION	SUCCEEDING LETTERS: OUTPUT FUNCTION	SUCCEEDING LETTERS: MODIFIER
A	ANALYSIS		ALARM		
C	CONDUCTIVITY			CONTROL	
D	DENSITY	DIFFERENTIAL			
E	VOLTAGE		ELEMENT		
F	FLOW				
G			GLASS		
H	HAND (MANUALLY INITIATED)				HIGH
I	CURRENT		INDICATE		
J	POWER				
K	TIME				
L	LEVEL		LIGHT		LOW
M	MOISTURE				
O			ORIFICE, RESTRICTION		
P	PRESSURE, VACUUM				
Q	STATUS	TOTALIZE			
R	RADIATION		RECORDER		
S	SPEED	SAFETY		SWITCH	
SG	SPECIFIC GRAVITY				
T	TEMPERATURE			TRANSMIT	
U	MULTIVARIABLE				
V	VIBRATION			VALVE	
W	WEIGHT OR FORCE (STRAIN)		WELL		
WF	WEIGHT FACTOR				
X	TROUBLE	FAILURE	UNCLASSIFIED (1)		FAILURE
Y	EVENT, STATE OR PRESENCE			RELAY, COMPUTE, CONVERT	
Z	POSITION			ACTUATOR	

ISSUED FOR 90% DESIGN
NOT FOR CONSTRUCTION

REV	DESCRIPTION	ORIG	CHK	APVD	IDV	DATE
1	RE-APPROVED FOR DESIGN	GK	TN	MW	N/A	05/15/17
0	APPROVED FOR DESIGN	GK	TN	MW	N/A	09/19/18

REVISIONS

REVISION APPROVAL RECORD					REV 1
DISCIPLINE	BY	DATE	DISCIPLINE	BY	DATE
ARCH.	N/A		MECHANICAL	DS	05/15/17
BUILDING SERVICES	WL	05/15/17	PIPING	MJ	05/15/17
CIVIL	N/A		PROCESS	MW	05/15/17
ELECTRICAL	LC	05/15/17	QA / QC	PRC	05/15/17
ENVIRON.	N/A		STRUCTURAL	N/A	
GEN. ARRANG.	N/A		FP	KB	05/15/17
I & C	HF	05/15/17			

DRAWING STATUS				
ISSUED	REV	DATE	SDE	PEM
PRELIMINARY				
RE-APPROVED FOR DESIGN	1	05/15/17	MW	MS For DP

NOT APPROVED FOR CONSTRUCTION UNLESS SIGNED AND DATED. DESTROY ALL PRINTS BEARING EARLIER DATE AND/OR REV.NO.

AECOM
URS ENERGY & CONSTRUCTION Inc. - an AECOM Company
ATKINS
AREVA

AECOM PROJECT NO.: 31269

DRAWING TRACEABILITY LIST

DWG NUMBER	TITLE	REF NUMBER	TITLE
		REFERENCES	
		NEXT USED ON H-16-000001	

BLDG. NO. 202LP

SHEET NO. 7004

CAUTION
NOT COMPLETE WITHOUT CURRENT CHANGE DOCUMENTS FROM DATABASE

ATTENTION
DESTROY THIS DOCUMENT BY SHREDDING MAY CONTAIN SENSITIVE INFORMATION

	NAME	DATE
DRAWN BY		
CHECKED BY		
DISCIPLINE APPROVAL		
DISCIPLINE ENGINEER		
ENGINEER		

U.S. DEPARTMENT OF ENERGY
Office of River Protection

LAWPS
P&ID INSTRUMENT SYMBOLS & VALVE DETAILS (1)

SIZE F | DRAWING NUMBER H-16-000003 | SHEET 1 | REV 1

SCALE NONE

PLOTTED

MARK O. WOODWARD, STATE OF WASHINGTON, 51319, REGISTERED PROFESSIONAL ENGINEER 5/15/17

For Peer Review

DRAWING

H-16-000003-2

LAWPS P&ID INSTRUMENT SYMBOLS AND VAVLE DETAILS

DETAIL 1A: ON / OFF PNEUMATIC ACTUATED, DCS / PLC CONTROL

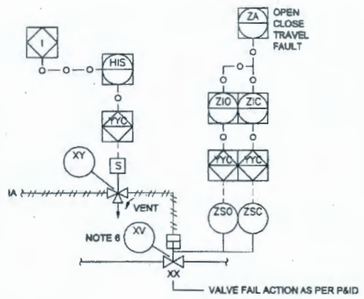

DETAIL 1A (SIS) : ON / OFF PNEUMATIC ACTUATED, DCS / PLC CONTROL

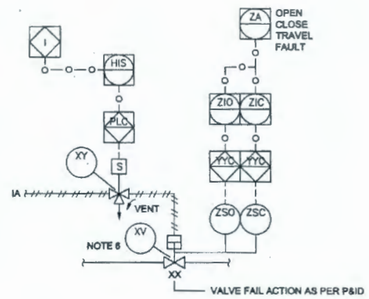

DETAIL 1B: THREE - WAY PNEUMATIC ACTUATED, DCS / PLC CONTROL

FC / FO

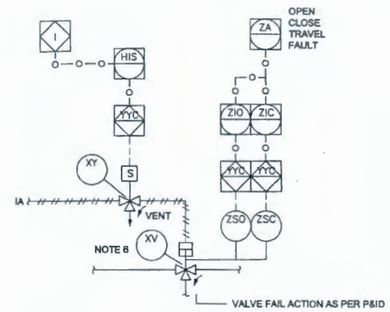

FL

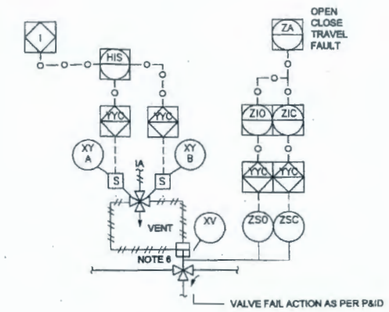

DETAIL 1C: MODULATING PNEUMATIC ACTUATED, DCS / PLC CONTROL

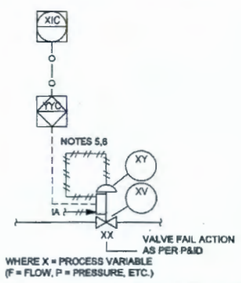

DETAIL 1D: ON/OFF PNEUMATIC ACTUATED DCS / PLC CONTROL WITH POSITION TRANSMITTER AND SAFETY SOLENOID

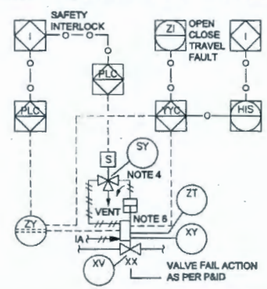

DETAIL 1E: ON/OFF PNEUMATIC ACTUATED DCS / PLC CONTROL WITH POSITION TRANSMITTER FOR SAFETY INTERLOCK

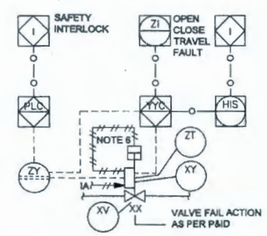

NOTES:

1. LOOP NUMBERS FOR TAGS ARE TAKEN FROM THE VALVE TAG, AS SHOWN ON EACH P&ID THAT REFERENCES THIS DETAIL.
2. INTERLOCK NUMBER AND PROPER SYMBOL (DCS OR PLC) WILL BE SHOWN ON PROCESS P&ID.
3. FOR VALVES LOCATED IN PITS WITH EXTENDED VALVE STEMS / ACTUATORS, LIMIT SWITCH AND POSITIONER WILL BE LOCATED OUTSIDE THE PITS.
4. SAFETY SOLENOID VALVE (SY) IS TO TRIP THE VALVE TO ITS FAILURE POSITION.
5. REMOTELY MAINTAINABLE MODULATING CONTROL VALVES WILL UTILIZE A PNEUMATIC PISTON ACTUATOR.
6. ACTUATOR TYPE (SINGLE ACTING, DOUBLE ACTING, ETC.) AND SOLENOID TYPE (3-WAY, 4-WAY, ETC.) WILL BE SPECIFIED ON THE INDIVIDUAL VALVE DATASHEETS.
7. FOR COMPLETE CONTROLS AND STATUS INDICATIONS OF MOTORS, CONTROL STATIONS, AND VFD'S, SEE I/O LIST DOCUMENT 31269-19-LST-0002.
8. EVERY SAFETY PLC ANALOG INPUT SIGNAL IS ALSO WIRED VIA A SIGNAL SPLITTER TO AN ANALOG INPUT IN THE DCS FOR MONITORING AND DIAGNOSTICS.

TAG	DESCRIPTION	I / O TYPE
ZSO	OPEN LIMIT SWITCH	DI
ZSC	CLOSE LIMIT SWITCH	DI
ZIO	LIMIT SWITCH INDICATION OPEN	SDI
ZIC	LIMIT SWITCH INDICATION CLOSE	SDI
ZA	VALVE STATUS	SOFT
HIS	VALVE SWITCH	SOFT
XY	SOLENOID VALVE/POSITIONER	DO/AO
ZT	POSITION TRANSMITTER	AI (SAFETY)
ZI	POSITION INDICATION	SOFT
XV	ON-OFF VALVE	N/A
SY	SAFETY SOLENOID (AS REQUIRED)	DO (SAFETY)
ZY	POSITION INDICATION (AS REQUIRED)	AI

VALVE FAIL POSITIONS	
SYMBOL	DESCRIPTION
FO	FAIL OPEN
FC	FAIL CLOSED
FL	FAIL LAST

REVISION APPROVAL REQORD				REV	1
DISCIPLINE	BY	DATE	DISCIPLINE	BY	DATE
ARCH.	N/A		MECHANICAL	DS	05/15/17
BUILDING SERVICES	WL	05/15/17	PIPING	MJ	05/15/17
CIVIL	N/A		PROCESS	MW	05/15/17
ELECTRICAL	LC	05/15/17	QA / QC	PB	05/15/17
ENVIRON.	N/A		STRUCTURAL	N/A	
GEN. ARRANG.	N/A		FP	KB	05/15/17
I & C	HF	05/15/17			

DRAWING STATUS				
ISSUED	REV	DATE	SDE	PEM
PRELIMINARY				
RE-APPROVED FOR DESIGN	1	05/15/17	MW	MS For DP

NOT APPROVED FOR CONSTRUCTION UNLESS SIGNED AND DATED. DESTROY ALL PRINTS BEARING EARLIER DATE AND/OR REV.NO.

AECOM
URS ENERGY & CONSTRUCTION Inc. - an AECOM Company
ATKINS
AREVA

AECOM PROJECT NO.: 31269

DWG NUMBER	TITLE
	DRAWING TRACEABILITY LIST

REF NUMBER	TITLE
	REFERENCES
NEXT USED ON H-16-000001	

REV	DESCRIPTION	ORIG	CHK	APVD	IDV	DATE
1	RE-APPROVED FOR DESIGN	GK	TN	MW	N/A	05/15/17

REVISIONS

MARK O WOODWORTH
STATE OF WASHINGTON
51519
REGISTERED
PROFESSIONAL ENGINEER
5/16/17
For Permitting

ISSUED FOR 90% DESIGN
NOT FOR CONSTRUCTION

BLDG. NO. 202LP

INDEX NO. 7004

CAUTION
NOT COMPLETE WITHOUT CURRENT CHANGE DOCUMENTS FROM DATABASE

ATTENTION
DESTROY THIS DOCUMENT BY SHREDDING MAY CONTAIN SENSITIVE INFORMATION

NAME	DATE	COMPANY
DRAWN BY		
DRAWING APPROVAL		
DISCIPLINE ENGINEER		
ENGINEER		

U.S. DEPARTMENT OF ENERGY
Office of River Protection

LAWPS
P&ID INSTRUMENT SYMBOLS & VALVE DETAILS

SIZE	DRAWING NUMBER	SHEET	REV
F	H-16-000003	2	1

SCALE NONE

PLOTTED

DOC_TB_F.DWG (JAN 2010)

DRAWING

H-16-000004

LAWPS P&ID TAGGING LEGEND

EQUIPMENT/VALVE/SPECIALTY ITEM IDENTIFICATION

XXXXX-XXX - XXXXX - XXXX - XXXX X

- OPTIONAL ALPHA DESIGNATOR
- SEQUENCE NUMBER
- COMPONENT (SEE TABLES)
- SYSTEM CODE (SEE TABLE)
- LOCATION (SEE TABLE)

LINE IDENTIFICATION

XXXXX - X" - XXX - XXXX - XX / XX

- PIPE SPECIFICATION CODE - EXTERNAL (SEE TABLE)
- PIPE SPECIFICATION CODE (SEE TABLE)
- LINE IDENTIFICATION NUMBER
- SERVICE CODE (SEE TABLE)
- LINE SIZE
- SYSTEM CODE (SEE TABLE)

JUMPER IDENTIFICATION

XXXXX - XX - X - [X-X-X]

- JUMPER CONNECTION (VARIES BASED ON CONNECTION)
- JUMPER IDENTIFER
- JUMPER SERVICE CODE (SEE TABLE)
- JUMPER LOCATION (SEE TABLE)
- JUMPER SYSTEM (SEE TABLE)

INSTRUMENT IDENTIFICATION

XXXXX-XXX - XXXXX - XXXXX - XXXX - X

- OPTIONAL ALPHA DESIGNATOR
- SEQUENCE NUMBER
- INSTRUMENT (SEE TABLE ON H-16-000003)
- SYSTEM (SEE TABLE)
- LOCATION (SEE TABLE)

LOCATION CODE

BUILDING CODE (MAX 5)	SUB-LOCATION CODE (MAX 5)	
107AP	INTER-AREA TRANSFER	ITS
202LP	CROSSFLOW FILTER AREA	CFA
202LP	CLEAN RESIN AREA	CRS
202LP	CS PRODUCT TANK AREA	CSA
202LP	FILTER FEED TANK AREA	FFA
202LP	ION EXCHANGE AREA	IXA
202LP	LAYDOWN AREA	LA
202LP	LAG STORAGE AREA	LSA
202LP	SPENT RESIN AREA	SRA
202LP	TRUCK ACCESS AIRLOCK	TAA
202LP	VENTILATION SUPPLY	VS
202LP	VENTILATION EXHAUST	VE
210LP	PROCESS AREA	PA
210LP	REAGENT STORAGE AREA	RSA
227LP	PERSONNEL CHANGE FACILITY	PCF
228LP	SAFETY EQUIPMENT BUILDING	SEB
251LP	ELECTRICAL EQUIPMENT CENTER	EEC
202LP	ELECTRICAL EQUIPMENT ROOM	EER
253LP	BACK UP POWER SYSTEM	BPS
253LP	GENERATOR EQUIPMENT BUILDING	GEB
274AW	CENTRAL CONTROL ROOM	CCR

SYSTEM CODE

SYSTEM DESCRIPTION	SYSTEM CODE (MAX 5)
BUILDING/VAULT VENTILATION	BVV
COOLING WATER	CW
CROSS FLOW FILTRATION	CFF
DISTRIBUTED CONTROL SYSTEM	DCS
CESIUM PRODUCT TANK & EFFLUENT COLLECTION SYSTEM	ECS
ELECTRICAL DISTRIBUTION SYSTEM	EDS
EXHAUST STACK SYSTEM	ESS
FIRE PROTECTION	FP
INTER-AREA TRANSFER SYSTEM	ITS
ION EXCHANGE	IX
LAG STORAGE TANK & DIVERSION	LAG
PROCESS VESSEL VENTILATION	PVV
REAGENT SYSTEM	RS
RESIN HANDLING	RH
SAFETY INSTRUMENTED SYSTEM	SIS
UTILITIES	UT
HANFORD LOCAL AREA NETWORK	HLAN

COMPONENT CODES

EQUIPMENT COMPONENT DESCRIPTION	COMPONENT CODE (MAX 4)
AIR COOLED CONDENSER	CND
AIR HANDLING UNIT	AHU
AIR RECEIVER	X
BACKDRAFT DAMPER	BDD
CABINET	CBT
COMPRESSOR	CPR
CONTROL PIPING STAND	CP
COOLER/ CHILLER	CLR
COOLING SYSTEM	CLG
CRANE	CRN
DAMPER	DMPR
DEIONIZER	DI
DEMISTER	DMST
DRYER	DR
EJECTOR/EDUCTOR	EJR
EMERGENCY DIESEL GENERATOR	EDG
FAN	FN
FAN MOTOR	FM
FILL HEAD	FH
FILTER	F
FIRE ALARM CONTROL PANEL	FACP
HEAT EXCHANGER	EXCH
HEATER	HTR
HOIST	HST
ION EXCHANGE COLUMN	IXC
LOUVER	LVR
MIXER	MIX
MIXER MOTOR	MM
MONITORING SYSTEM	MON
PNEUMATIC LID TOOL	LT
PRESSURE SAFETY VALVE	PSV
PUMP	P
PUMP MOTOR	PM
SAMPLER	SAMP
SKID	SK
SPECIAL TOOLS	TOL
STACK	ST
TANK	TK

ELECTRICAL EQUIPMENT COMPONENT DESCRIPTION	COMPONENT CODE (MAX 4)
AUTOMATIC TRANSFER SWITCH	ATS
BATTERY	BATT
BREAKER	BKR
CHARGER	CHG
CONTACTOR	CONT
CONTROL POWER TRANSFORMER	CPT
CURRENT TRANSFORMER	CT
DISCONNECT SWITCH	DS
FIRE ALARM CONTROL PANEL	FACP
FUSE	FU
GENERATOR	GEN
GROUND FAULT CIRCUIT INTERRUPTER	GFCI
HAND SWITCH (ON/OFF)	HS
HAND SWITCH (HAND/OFF/AUTO)	HOA
INVERTER	INV
JUNCTION BOX	JBX
JUNCTION BOX - POWER	JBP
MANUAL TRANSFER SWITCH	MTS
MOTOR CONTROL CENTER	MCC
MOTOR CIRCUIT PROTECTOR	MCP
LOAD BANK	LBK
LOCAL MOTOR STARTER	LMS
PANEL - HEAT TRACE	HTP
PANEL - INSTRUMENT / CONTROL	PNL
PANEL - LIGHTING	LTP
PANEL - POWER	PPL
PANEL - UPS	UPL
RECEPTACLE	RCP
RELAY	RLY
SWITCHGEAR	SWGR
SWITCHBOARD	SBD
UNINTERRUPTIBLE POWER SUPPLY	UPS
VARIABLE FREQUENCY DRIVE	VFD
TRANSFORMER	XFR

VALVE COMPONENT DESCRIPTION	COMPONENT CODE (MAX 4)
MANUAL VALVE	VLV
CHECK VALVE	CKV
REMOTE MANUAL VALVE	VLR

SPECIALTY ITEM COMPONENT	COMPONENT CODE (MAX 4)
BACKFLOW PREVENTER	BF
DRIP PAN	DPN
EMERGENCY SHOWER	ES
EXPANSION JOINT	EJ
FIRE HYDRANT	HYD
FLEXIBLE HOSE	FH
HOSE COUPLING	CPL
MANIFOLD	MN
POST INDICATOR	PI
SIGHT FLOW INDICATOR	SFI
STRAINER	STR
TRENCH ADAPTER	TA
UTILITY STATION	US
VALVE MANIFOLD	VM
THREE WAY VALVE	TWV

PIPING SPECIFICATION CODE

MATERIAL OF CONSTRUCTION	SERVICES	PIPE SPECIFICATION CODE
CARBON STEEL	GLYCOL/WATER (G)	P1
LINED DUCTILE IRON	FIRE PROTECTON ABOVE GRADE (FPAG)	P2
CARBON STEEL	SODIUM NITRITE (NAN)	P3
304/304L STAINLESS STEEL	NITRIC ACID, (NA), SODIUM HYDROXIDE (NAH), CHEMICALS (CH), UTILITY EXHAUST (EXH), OXALIC ACID (CH)	P4
316/316L STAINLESS STEEL	IN-PLANT WASTE (SL) (SN), CHEMICALS (CH), PROCESS DRAINS (DR), PROCESS VENTS (AIR), FRESH RESIN (FR), TREATED PROCESS WATER (TPW), SPENT RESIN (SR), PROCESS VENTS (AIR), CONDENSATE (COND)	P5
304/304L STAINLESS STEEL	CHILLED WATER (CHW), TREATED PROCESS WATER (TPW), HOT WATER (HW), CONDENSATE (COND), A/G POTABLE WATER (POT), UTILITY EXHAUST (EXH), COMPRESSED AIR (CA), INSTRUMENT AIR (IA), PLANT AIR (AIR), PROCESS DRAINS, FRESH RESIN (FR)	P6
316/316L STAINLESS STEEL	CARRIER PIPING FOR WASTE TRANSFER PIPING (SL) (SN)	P7
CARBON STEEL	SECONDARY CONTAINMENT PIPING FOR WASTE TRANSFER LINES	P8
304/304L STAINLESS STEEL	PROCESS VENTS (AIR), HVAC SUPPLY AND RETURN AIR (AIR)	P9
PVC	FIRE PROTECTION - UNDERGROUND (FPBG)	P10
304L SS TUBING	NOT USED	P11
316/316L STAINLESS STEEL TUBING	LAG TANK VENT SAMPLE SYSTEM, COMBUSTIBLE GAS MONITORS, (A PNEUMATIC LINES	P12
304/304L STAINLESS STEEL	HVAC DUCTWORK	H1

SERVICE CODE

SERVICE DESCRIPTION	SERVICE CODE (MAX 4)	LINE IDENTIFICATION NUMBER (MAX 4)
AIR	AIR	1-9999
COMPRESSED AIR	CA	
CHEMICALS	CH	
CHILLED WATER	CHW	
CONDENSATE	COND	
DRAIN	DR	
ENCASEMENT HYDROTEST RISER	EHR	
ELECTRICAL	E	
ENCASEMENT	ENC	
EXHAUST	EXH	
FIRE PROTECTION, ABOVE-GRADE	FPAG	
FIRE PROTECTION, BELOW GRADE	FPBG	
FRESH RESIN	FR	
GLYCOL/WATER	G	
HOT WATER	HW	
INSTRUMENT AIR	IA	
NITRIC ACID	NA	
POTABLE WATER	POT	
SPENT RESIN	SR	
SODIUM HYDROXIDE	NAH	
SODIUM NITRITE	NAN	
RAW WATER	RW	
SLURRY	SL	
SUPERNATANT	SN	
TREATED PROCESS WATER	TPW	

ACRONYMS AND ABBREVIATIONS

ACC	ACCESSORY
AG	ABOVE GROUND
AHU	AIR HANDLING UNIT
ATM	ATMOSPHERE
BOP	BOTTOM OF PIPE
BTU	BRITISH THERMAL UNITS
CFM	CUBIC FEET PER MINUTE
CL	CENTERLINE ELEVATION
CO	CLEAN OUT
CONN	CONNECTION
CPLG	COUPLING
CP-MPS	CS PRODUCT RETURN LINE MISROUTE PREVENTION SYSTEM
CFF	CROSS FLOW FILTER
Cs	CESIUM
DR	DRAIN
DP	DIFFERENTIAL PRESSURE
DCS	DISTRIBUTED CONTROL SYSTEM
DIA	DIAMETER
DMST	DEMISTER
DQO	DATA QUALITY OBJECTIVES
DST	DOUBLE SHELL TANK
DVI	DOUBLE VALVE ISOLATION
ECS	EFFLUENT COLLECTION SYSTEM
EDS	ELECTRICAL DISTRIBUTION SYSTEM
EEC	ELECTRICAL EQUIPMENT CENTER
ELEV	ELEVATION
ENV	ENVIRONMENTAL MONITORING
ET	ELECTRIC TRACING
EXT	EXTERNAL
FACP	FIRE ALARM CONTROL PANEL
FC	FAIL CLOSED
FFT	FILTER FEED TANK
FL	FAIL LAST
FO	FAIL OPEN
FP	FULL PORT
FPAG	FIRE PROTECTION ABOVE GRADE
FT	FEET
FV	FULL VACUUM
GA	GENERAL ARRANGEMENT
GAL	GALLONS
GPM	GALLONS PER MINUTE
GAP	GAP CONTROL
GRS	GAS REMOVAL SYSTEM
GEB	GENERATOR EQUIPMENT BUILDING
GS	GENERAL SERVICE
GWR	GUIDED WAVE RADAR
H	HIGH
HC	HOSE CONNECTION
HEPA	HIGH EFFICIENCY PARTICULATE AIR
HIC	HIGH INTEGRITY CONTAINER
HH	HIGH HIGH OR HAND HOLE
HNO_3	NITRIC ACID
HOA	HAND/OFF/AUTO
HP	HORSEPOWER
HR	HOUR
HT	HEIGHT
HVAC	HEATING, VENTILATING, AND AIR CONDITIONING
HYD	HYDRAULIC
IA	INSTRUMENT AIR
IBC	INTERMEDIATE BULK CONTAINER
IBC	INTERNATIONAL BUILDING CODE
ICD	INTERFACE CONTROL DOCUMENT
ID	INSIDE DIAMETER
ITS	INTER-AREA TRANSFER SYSTEM
IX	ION EXCHANGE
IXC	ION EXCHANGE COLUMN
L	LOW
LAWPS	LOW ACTIVITY WASTE PRETREATMENT SYSTEM
LAW	LOW ACTIVITY WASTE
LL	LOW LOW
LS-MPS	LAG STORAGE MISROUTE PREVENTION SYSTEM
LSTD	LAG STORAGE TANK AND DIVERSION
M	MOLAR
MAG	MAGNETIC
MAX	MAXIMUM
MCC	MOTOR CONTROL CENTER
MH	MAN HOLE
MIN	MINIMUM
MOV	MOTOR OPERATED VALVE
MSA	MISSION SUPPORT ALLIANCE
NaOH	SODIUM HYDROXIDE
$NaNO_2$	SODIUM NITRITE
NC	NORMALLY CLOSED
NCLV	NORMALLY CLOSED LOCKABLE VALVE
NCR	NON-CONTACTING RADAR
NFPA	NATIONAL FIRE PROTECTION AGENCY
NNF	NORMALLY NO FLOW
NOLV	NORMALLY OPEN LOCKABLE VALVE
NPH	NATURAL PHENOMENA HAZARD
NPS	NOMINAL PIPE SIZE
NPSH	NET POSITIVE SUCTION HEAD
OD	OUTSIDE DIAMETER
P	PUMP OR PIT
PB	PUSH BUTTON
PCS	PROCESS CONTROL SYSTEM
PFD	PROCESS FLOW DIAGRAM
P&ID	PIPING AND INSTRUMENTATION DIAGRAM
PIMS	PROCESS INVENTORY MONITORING SYSTEM
PKG	PACKAGE
PLC	PROGRAMMABLE LOGIC CONTROLLER
PP-MPS	PRETREATMENT PROCESS MISROUTE PREVENTION SYSTEM
PRESS	PRESSURE
PSIG	POUNDS PER SQUARE INCH GAUGE
PSV	PRESSURE SAFETY VALVE
PW-MPS	PROCESS WATER MISROUTE PREVENTION SYSTEM
QA	QUALITY ASSURANCE
RO	RESTRICTION ORIFICE
RPM	REVOLUTIONS PER MINUTE
SC	SAMPLE CONNECTION
SCFM	STANDARD CUBIC FEET PER MINUTE
SDI	SERVICE DEIONIZATION
SEL	SELECTOR
SIL	SAFETY INTEGRITY LEVEL
SIS	SAFETY INSTRUMENTED SYSTEM
SP	SET POINT
sRF	SPHERICAL RESORCINOL FORMALDEHYDE
SS	SAFETY SIGNIFICANT OR STAINLESS STEEL
SSC	STRUCTURE, SYSTEM, OR COMPONENT
STD	STANDARD
STES	STANDBY TANK EXHAUST SYSTEM
SW	SOCKET WELD
SYS	SYSTEM
TBD	TO BE DETERMINED
TBV	TO BE VERIFIED
TD	TIME DELAY
TDH	TOTAL DIFFERENTIAL HEAD
TEMP	TEMPERATURE
TFMCS	TANK FARMS MONITORING AND CONTROL SYSTEM
TPW	TREATED PROCESS WATER
TSR	TECHNICAL SAFETY REQUIREMENT
T/F	TANGENT TO FLANGE
T/T	TANGENT TO TANGENT
TSO	TIGHT SHUTOFF
TWDT	TREATED WASTE DELAY TANK
TW-MPS	TREATED WASTE TRANSFER LINE MISROUTE PREVENTION SYSTEM
TYP	TYPICAL
UC	UTILITY CONNECTION
UG	UNDERGROUND
UPS	UNINTERRUPTIBLE POWER SUPPLY
V	VENT OR VAULT
VAC	VACUUM
VB	VORTEX BREAKER
VFD	VARIABLE FREQUENCY DRIVE OR VENTILATION AIR FLOW DIAGRAM
V&ID	VENTILATION AND INSTRUMENT DIAGRAM
WAC	WASTE ACCEPTANCE CRITERIA
WC	WATER COLUMN
WF-MPS	TANK WASTE FEED TRANSFER LINE MISROUTE PREVENTION SYSTEM
WRPS	WASHINGTON RIVER PROTECTION SOLUTIONS
WTP	WASTE TREATMENT PLANT

JUMPER IDENTIFICATION

JUMPER SYSTEM/LOCATION CODE		JUMPER ID TAG CODES: JUMPER SERVICE CODE (MAX 5)		JUMPER IDENTIFIER CODE (MAX 5)		JUMPER CONNECTION CODE: CONNECTION TAG AT EQUIPMENT (MAX 1) OR CONNECTION TAG AT (THROUGH) WALL (MAX 2)	JUMPER CONNECTION CODE: CONNECTION TAG AT (THROUGH) WALL (MAX 2) OR CONNECTION TAG AT EQUIPMENT (MAX 1)
PITS (P) AND VAULTS (V)		COMPRESSED AIR	CA	ETHYLENE PROPYLENE DIENE HOSE JUMPERS	EPDMJ	ALPHA CHARACTER(S) FOR CONNECTION AT EQUIPMENT OR NUMERICAL CHARACTER(S) FOR CONNECTION AT (THROUGH) WALL	NUMERICAL CHARACTER(S) FOR CONNECTION AT (THROUGH) WALL OR ALPHA CHARACTER(S) FOR CONNECTION AT EQUIPMENT
DAMPER PIT BVV-P-01	BVVP01	CHEMICALS	CHEM	FLEXIBLE METAL HOSE JUMPER	FMJ	A - Z	1 - 99
DEMISTER PIT BVV-P-01	PVVP01	HOT WATER	HW	RIGID JUMPER	J	1 - 99	A - Z
FFT VALVE PIT CFF-P-01	CFFP01	DRAIN	DR				
FFT PUMP PIT CFF-P-02	CFFP02	ELECTRICAL	E				
CROSS FLOW FILTER PIT CFF-P-03	CFFP03	EXHAUST	EXH				
FILTER FEED TANK VAULT CFF-V-01	CFFV01	FRESH RESIN	FR				
CS TANK PUMP PIT A ECS-P-01	ECSP01	SLURRY	SL				
CS TANK PUMP PIT B ECS-P-02	ECSP02	SUPERNATANT	SN				
CS SUMP PIT ECS-P-03	ECSP03	SPENT RESIN	SR				
FFT SUMP PIT ECS-P-04	ECSP04	TREATED PROCESS WATER	TPW				
CS TANK VAULT ECS-V-01	ECSV01	VENTILATION TANK	VTP				
IX VALVE PIT IX-P-01	IXP01						
IX PIT IX-P-02	IXP02						
NOT USED	IXP03						
NOT USED	IXP04						
IX REAGENT VALVE PIT IX-P-05	IXP05						
IX DELAY TANK PIT IX-P-06	IXP06						
DELAY TANK MONITORING PIT IX-P-07	IXP07						
NOT USED	IXP08						
LAG STORAGE VAULT LAG-V-01	LAGV01						

For Permitting

ISSUED FOR 90% DESIGN
NOT FOR CONSTRUCTION

REV	DESCRIPTION	ORIG	CHK	APVD	IDV	DATE
1	RE-APPROVED FOR DESIGN	GK	TN	MW	N/A	05/15/17
0	APPROVED FOR DESIGN	GK	TN	MW	N/A	09/19/16

REVISIONS

REVISION APPROVAL RECORD					REV 1
DISCIPLINE	BY	DATE	DISCIPLINE	BY	DATE
ARCH.	N/A		MECHANICAL	DS	05/15/17
BUILDING SERVICES	WL	05/15/17	PIPING	MJ	05/15/17
CIVIL	N/A		PROCESS	MW	05/15/17
ELECTRICAL	LC	05/15/17	QA / QC	PMC	05/15/17
ENVIRON.	N/A		STRUCTURAL	N/A	
GEN. ARRANG.	N/A		FP	KB	05/15/17
I & C	HF	05/15/17			

DRAWING STATUS				
ISSUED	REV	DATE	SDE	PEM
PRELIMINARY				
RE-APPROVED FOR DESIGN	1	05/15/17	MW	MS For DP

NOT APPROVED FOR CONSTRUCTION UNLESS SIGNED AND DATED. DESTROY ALL PRINTS BEARING EARLIER DATE AND/OR REV.NO.

AECOM
URS ENERGY & CONSTRUCTION Inc. - an AECOM Company
ATKINS
AREVA

AECOM PROJECT NO.: 31289

DWG NUMBER	TITLE	REF NUMBER	TITLE
	DRAWING TRACEABILITY LIST	REFERENCES NEXT USED ON H-16-000001	

WBS. NO. 202LP
INDEX NO. 7004

CAUTION
NOT COMPLETE WITHOUT CURRENT CHANGE DOCUMENTS FROM DATABASE

ATTENTION
DESTROY THIS DOCUMENT BY SHREDDING MAY CONTAIN SENSITIVE INFORMATION

	NAME	DATE	COMPANY
DRAWN BY			
DRAFTING APPROVAL			
DISCIPLINE ENGINEER			
ENGINEER			

U.S. DEPARTMENT OF ENERGY
Office of River Protection

LAWPS
P&ID TAGGING LEGEND

SIZE F | DRAWING NUMBER H-16-000004 | SHEET 1 | REV 1
SCALE NONE
PLOTTED
DOC_TB_F.DWG (APR 2010)

DRAWING

H-16-000010

LAWPS PFD MAIN PROCESS

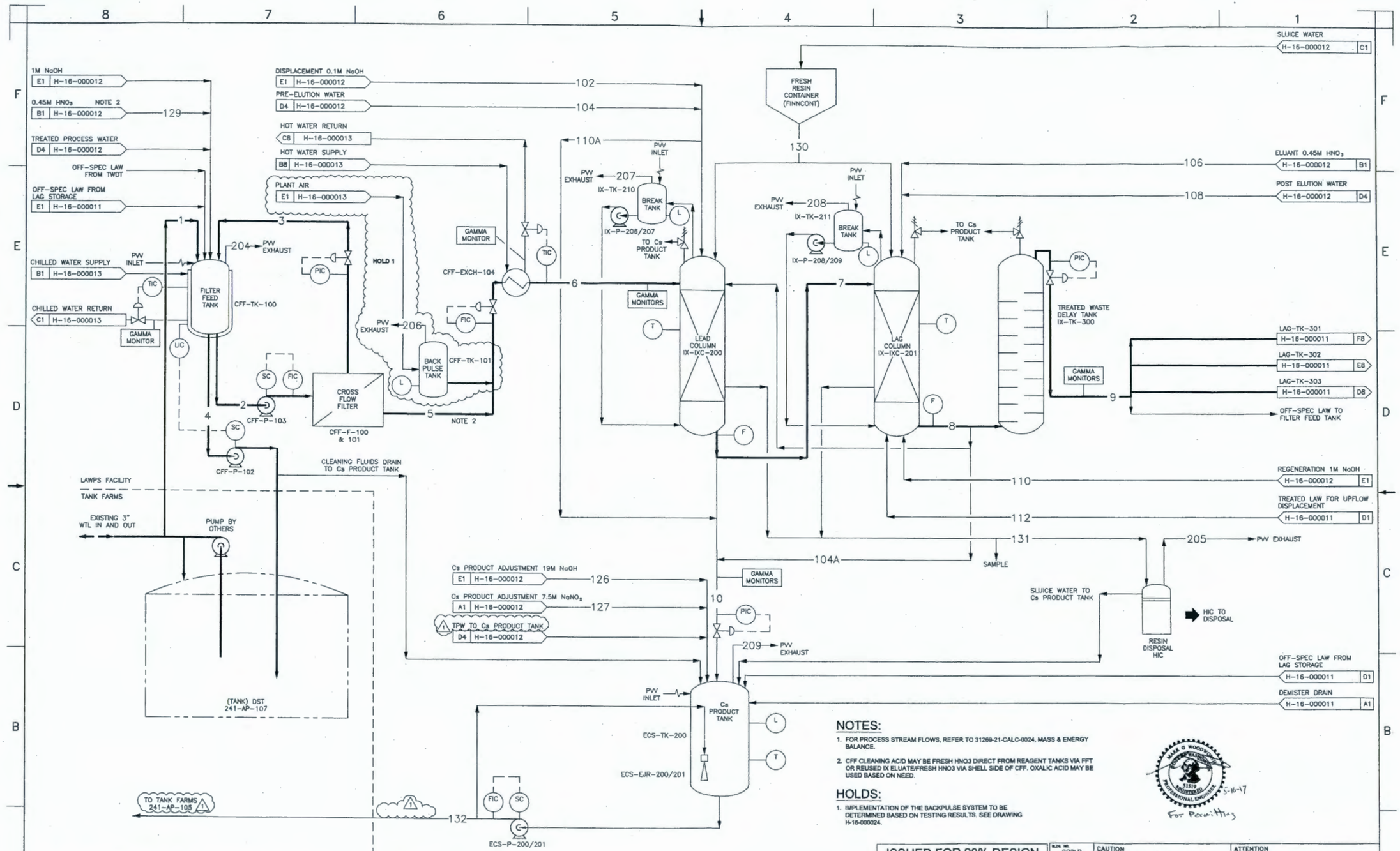

NOTES:

1. FOR PROCESS STREAM FLOWS, REFER TO 31269-21-CALC-0024, MASS & ENERGY BALANCE.
2. CFF CLEANING ACID MAY BE FRESH HNO3 DIRECT FROM REAGENT TANKS VIA FFT OR REUSED IX ELUATE/FRESH HNO3 VIA SHELL SIDE OF CFF. OXALIC ACID MAY BE USED BASED ON NEED.

HOLDS:

1. IMPLEMENTATION OF THE BACKPULSE SYSTEM TO BE DETERMINED BASED ON TESTING RESULTS. SEE DRAWING H-16-000024.

MARK G WOODWARD — STATE OF WASHINGTON — 31519 — REGISTERED PROFESSIONAL ENGINEER — 5-16-17

For Permitting

REVISION APPROVAL RECORD					REV 1
DISCIPLINE	BY	DATE	DISCIPLINE	BY	DATE
ARCH.	N/A		MECHANICAL	DS	05/15/17
BUILDING SERVICES	WL	05/15/17	PIPING	MJ	05/15/17
CIVIL	N/A		PROCESS	MW	05/15/17
ELECTRICAL	LC	05/15/17	QA / QC	PB	05/15/17
ENVIRON.	N/A		STRUCTURAL	N/A	
GEN. ARRANG.	N/A		FP	KB	05/15/17
I & C	EEP	05/15/17			

DRAWING STATUS				
ISSUED	REV	DATE	SDE	PEM
PRELIMINARY				
RE-APPROVED FOR DESIGN	1	05/15/17	MW MW	DP

NOT APPROVED FOR CONSTRUCTION UNLESS SIGNED AND DATED. DESTROY ALL PRINTS BEARING EARLIER DATE AND/OR REV NO.

AECOM
URS ENERGY & CONSTRUCTION Inc. - an AECOM Company
ATKINS
AREVA

AECOM PROJECT NO.: 31269

DWG NUMBER	TITLE
DRAWING TRACEABILITY LIST	

REF NUMBER	TITLE
REFERENCES	
NEXT USED ON H-16-000001	

ISSUED FOR 90% DESIGN
NOT FOR CONSTRUCTION

REV NO.	DESCRIPTION	DRWN	CHK	APVD	REV	DATE
1	RE-APPROVED FOR DESIGN	JB	DM	MW	N/A	05/15/17
0	APPROVED FOR DESIGN	JB	DM	MW	N/A	09/19/16

REVISIONS

BLDG. NO. 202LP
INDEX NO. 7000

CAUTION
NOT COMPLETE WITHOUT CURRENT CHANGE DOCUMENTS FROM DATABASE

ATTENTION
DESTROY THIS DOCUMENT BY SHREDDING MAY CONTAIN SENSITIVE INFORMATION

NAME	DATE
DRAWN BY	
DRAFTING APPROVAL	
DISCIPLINE ENGINEER	
ENGINEER	

U.S. DEPARTMENT OF ENERGY
Office of River Protection

LAWPS
PFD
MAIN PROCESS

SIZE F | DRAWING NUMBER H-16-000010 | SHEET 1 | REV 1
SCALE NONE
PLOTTED

DRAWING

H-16-000011

LAWPS PFD LAG STORAGE TANKS AND VENTILATION EXHAUST

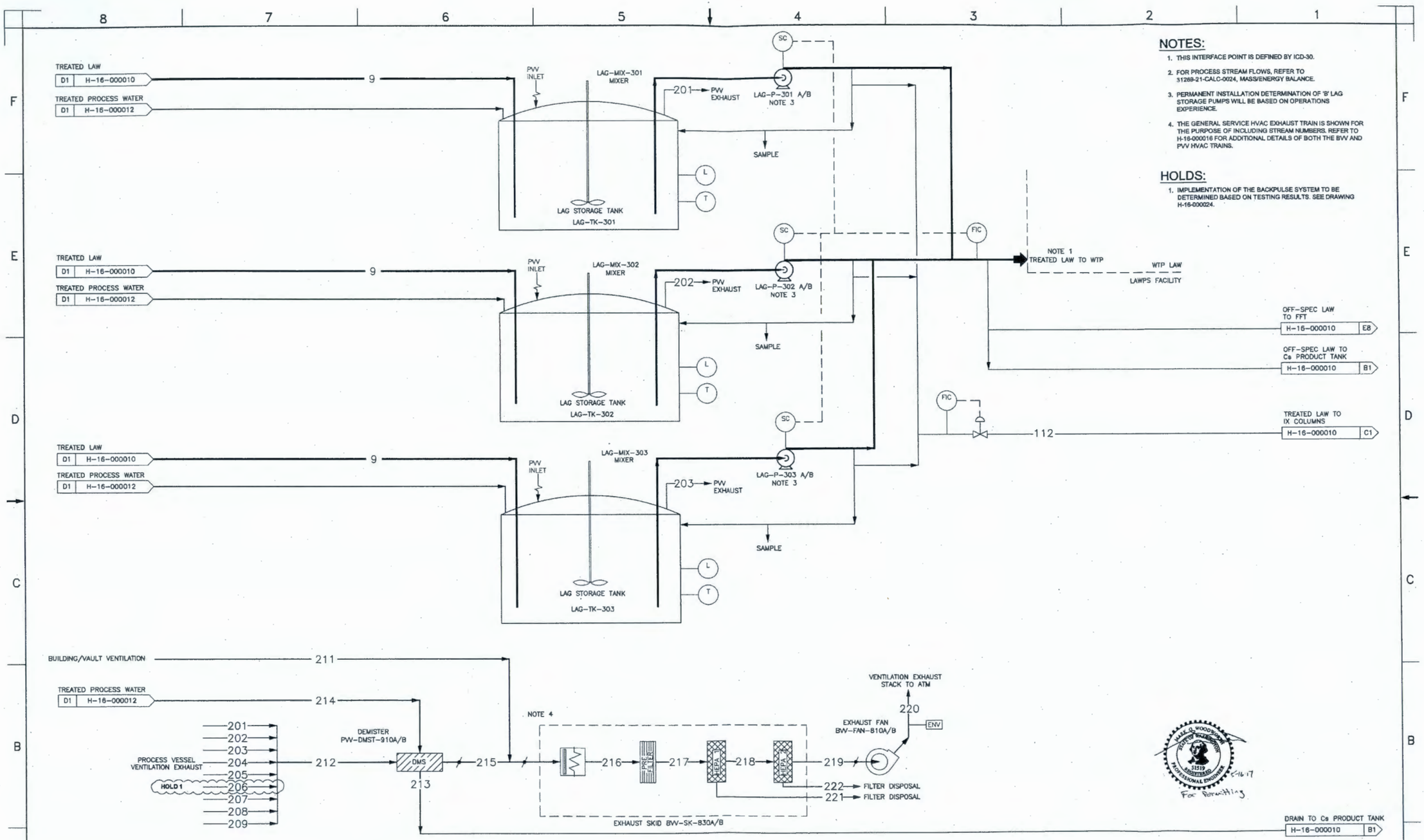

NOTES:

1. THIS INTERFACE POINT IS DEFINED BY ICD-30.
2. FOR PROCESS STREAM FLOWS, REFER TO 31269-21-CALC-0024, MASS/ENERGY BALANCE.
3. PERMANENT INSTALLATION DETERMINATION OF 'B' LAG STORAGE PUMPS WILL BE BASED ON OPERATIONS EXPERIENCE.
4. THE GENERAL SERVICE HVAC EXHAUST TRAIN IS SHOWN FOR THE PURPOSE OF INCLUDING STREAM NUMBERS. REFER TO H-16-000016 FOR ADDITIONAL DETAILS OF BOTH THE BVV AND PVV HVAC TRAINS.

HOLDS:

1. IMPLEMENTATION OF THE BACKPULSE SYSTEM TO BE DETERMINED BASED ON TESTING RESULTS. SEE DRAWING H-16-000024.

REVISION APPROVAL RECORD					REV 0
DISCIPLINE	BY	DATE	DISCIPLINE	BY	DATE
ARCH.	N/A		MECHANICAL	DS	09/19/16
BUILDING SERVICES	WL	09/19/16	PIPING	MJ	09/19/16
CIVIL	N/A		PROCESS	MW	09/19/16
ELECTRICAL	CF	09/19/16	QA / QC	PS	09/19/16
ENVIRON.	N/A		STRUCTURAL	N/A	
GEN. ARRANG.	N/A		FP	KB	09/19/16
I & C	HF	09/19/16			

DRAWING STATUS				
ISSUED	REV	DATE	SDE	PEM
PRELIMINARY				
APPROVED FOR DESIGN	0	09/19/16	MW	BGA

NOT APPROVED FOR CONSTRUCTION UNLESS SIGNED AND DATED. DESTROY ALL PRINTS BEARING EARLIER DATE AND/OR REV.NO.

AECOM
URS ENERGY & CONSTRUCTION Inc. - an AECOM Company
ATKINS
AREVA

AECOM PROJECT NO.: 31269

DWG NUMBER	TITLE	REF NUMBER	TITLE
DRAWING TRACEABILITY LIST		REFERENCES	
		NEXT USED ON H-16-000001	

APPROVED FOR DESIGN
NOT FOR CONSTRUCTION

REV	DESCRIPTION	DRG	CHK	APVD	ENV	DATE
0	APPROVED FOR DESIGN	JB	DM	MW	N/A	09/19/16

REVISIONS

BLDG. NO. 202LP
MODEL NO. 7000

CAUTION
NOT COMPLETE WITHOUT CURRENT CHANGE DOCUMENTS FROM DATABASE

ATTENTION
DESTROY THIS DOCUMENT BY SHREDDING MAY CONTAIN SENSITIVE INFORMATION

NAME	DATE	COMPANY
DRAWN BY		
DRAFTING APPROVAL		
DESIGNER CHECKER		
ENGINEER		

U.S. DEPARTMENT OF ENERGY
Office of River Protection

LAWPS
PFD
LAG STORAGE TANKS AND VENTILATION EXHAUST

SIZE F DRAWING NUMBER H-16-000011 SHEET 1 REV 0
SCALE NONE
PLOTID

DRAWING

H-16-000021

LAWPS P&ID AP TANK FARM CONNECTIONS

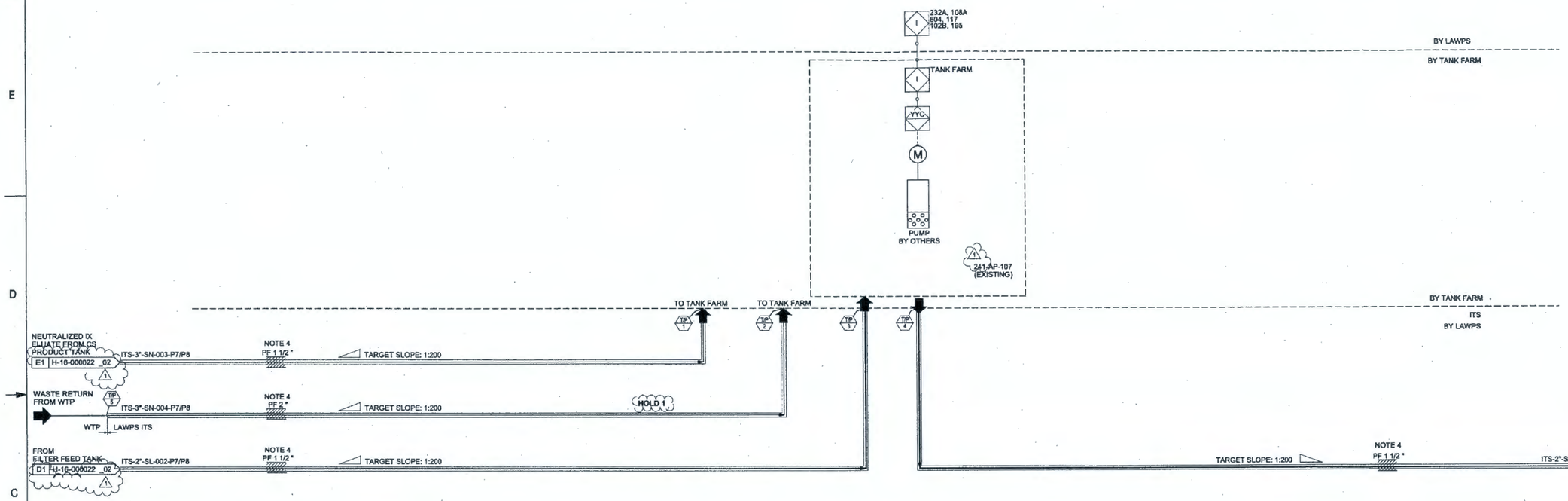

WASTE STREAMS FROM LAWPS TO TFMCS CONTROL INTERFACE SIGNALS			
SIGNAL	SIGNAL SOURCE	SIGNAL DESTINATION	SIGNAL TYPE
READY TO TRANSFER IX ELUATE	LAWPS	TFMCS	STATUS
READY TO RECEIVE IX ELUATE	TFMCS	LAWPS	PERMISSIVE
IX ELUATE TRANSFER IN PROGRESS	LAWPS	TFMCS	STATUS
TERMINATE IX ELUATE TRANSFER NOTE 6	TFMCS	LAWPS	INTERLOCK
IX ELUATE TRANSFER STOPPED	LAWPS	TFMCS	STATUS
READY TO TRANSFER FROM FFT	LAWPS	TFMCS	STATUS
READY TO RECEIVE FROM FFT	TFMCS	LAWPS	PERMISSIVE
TRANSFER FROM FFT IN PROGRESS	LAWPS	TFMCS	STATUS
TERMINATE TRANFER FROM FFT (NOTE 3)	TFMCS	LAWPS	INTERLOCK
FFT TRANSFER STOPPED	LAWPS	TFMCS	STATUS
LEAK DETECTION	LAWPS	TFMCS	INTERLOCK

WASTE FEED (SUPERNATANT) FROM 241-AP-107 (TFMCS) TO LAWPS FILTER FEED TANK CONTROL INTERFACE SIGNALS			
SIGNAL	SIGNAL SOURCE	SIGNAL DESTINATION	SIGNAL TYPE
READY TO TRANSFER WASTE	TFMCS	LAWPS	STATUS
READY TO RECEIVE WASTE	LAWPS	TFMCS	PERMISSIVE
TRANSFER IN PROGRESS	TFMCS	LAWPS	STATUS
TERMINATE TRANSFER (NOTE 2)	LAWPS	TFMCS	INTERLOCK
TRANSFER STOPPED	TFMCS	LAWPS	STATUS

NOTES:

1. ALL LAWPS PIPING ON THIS P&ID REQUIRES MINIMUM OF 3 FEET OF DIRT COVER.
2. TERMINATE TRANSFER FROM 241-AP-107 TO LAWPS IF THE FOLLOWING INTERLOCKS ARE ACTIVATED:
   * HIGH-HIGH FILTER FEED TANK LEVEL.
   * LOSS OF COMMUNICATION.
   * HIGH-HIGH CESIUM PRODUCT TANK LEVEL.
   * LOSS OF UTILITY POWER.
   * TRANSFER LINE LEAK DETECTED.
3. TERMINATE TRANSFER FROM FFT TO 241-AP-107 IF THE FOLLOWING INTERLOCKS ARE ACTIVATED:
   * LOSS OF COMMUNICATION.
   * TRANSFER LINE LEAK DETECTED.
4. ALL INSULATION THICKNESSES TO BE VERIFIED. SEE HOLD ON H-16-000002.
5. DELETED.
6. TERMINATE TRANSFER FROM CS TANK TRANSFER PUMP TO THE TANK FARM IF THE FOLLOWING INTERLOCKS ARE ACTIVATED:
   * LOSS OF COMMUNICATION
   * TRANSFER LINE LEAK DETECTED

HOLDS:

1. INTERMEDIATE LEAK DETECTION REQUIREMENTS TO BE FINALIZED.

MARK G. WOODWARD
STATE OF WASHINGTON
51519
REGISTERED
PROFESSIONAL ENGINEER
5-16-17
For Permitting

ISSUED FOR 90% DESIGN
NOT FOR CONSTRUCTION

REV	DESCRIPTION	ORIG	CHK	APVD	IDV	DATE
1	RE-APPROVED FOR DESIGN	GK	TN	MW	W W	05/15/17
0	APPROVED FOR DESIGN	GK	TN	MW	BC	09/19/16

REVISIONS

REVISION APPROVAL RECORD					REV 1
DISCIPLINE	BY	DATE	DISCIPLINE	BY	DATE
ARCH.	N/A		MECHANICAL	DS	05/15/17
BUILDING SERVICES	WL	05/15/17	PIPING	MJ	05/15/17
CIVIL	N/A		PROCESS	MW	05/15/17
ELECTRICAL	LC	05/15/17	QA / QC	PB	05/15/17
ENVIRON.	N/A		STRUCTURAL	N/A	
GEN. ARRANG.	N/A		FP	KB	05/15/17
I & C	BF	05/15/17			

DRAWING STATUS				
ISSUED	REV	DATE	SDE	PEM
PRELIMINARY				
RE-APPROVED FOR DESIGN	1	05/15/17	MW	MS For DP

NOT APPROVED FOR CONSTRUCTION UNLESS SIGNED AND DATED. DESTROY ALL PRINTS BEARING EARLIER DATE AND/OR REV NO.

AECOM
URS ENERGY & CONSTRUCTION Inc. - an AECOM Company
ATKINS
AREVA

AECOM PROJECT NO.: 31209

DWG NUMBER	TITLE
DRAWING TRACEABILITY LIST	

REF NUMBER	TITLE
REFERENCES	

NEXT USED ON H-16-000001

DWG NO. 107AP

MODEL NO. 7004

CAUTION
NOT COMPLETE WITHOUT CURRENT CHANGE DOCUMENTS FROM DATABASE

ATTENTION
DESTROY THIS DOCUMENT BY SHREDDING
MAY CONTAIN SENSITIVE INFORMATION

NAME	DATE	COMPANY
Drafter		
Design Approval		
Project Engineer		
Manager		

U.S. DEPARTMENT OF ENERGY
Office of River Protection

LAWPS
P&ID
AP TANK FARM CONNECTIONS

SIZE F | DRAWING NUMBER H-16-000021 | SHEET 1 | REV 1

SCALE NONE

PLOTTED

DRAWING

H-16-000022-1

LAWPS P&ID FILTER FEED TANK VAULT

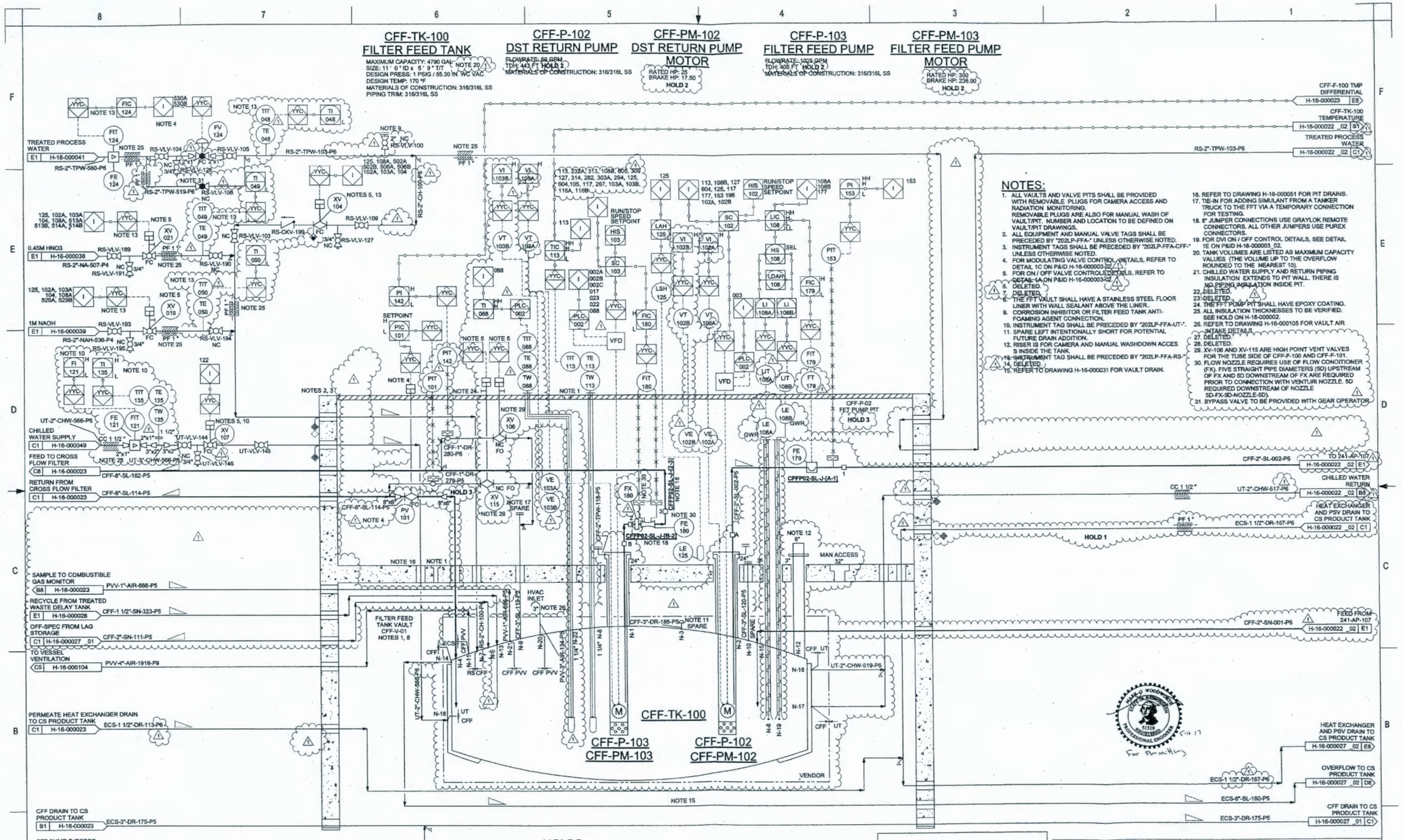

NOTES:

1. ALL VAULTS AND VALVE PITS SHALL BE PROVIDED WITH REMOVABLE PLUGS FOR CAMERA ACCESS AND RADIATION MONITORING. REMOVABLE PLUGS ARE ALSO FOR MANUAL WASH OF VAULT/PIT. NUMBER AND LOCATION TO BE DEFINED ON VAULT/PIT DRAWINGS.
2. ALL EQUIPMENT AND MANUAL VALVE TAGS SHALL BE PRECEDED BY "202LP-FFA-" UNLESS OTHERWISE NOTED.
3. INSTRUMENT TAGS SHALL BE PRECEDED BY "202LP-FFA-CFF-" UNLESS OTHERWISE NOTED.
4. FOR MODULATING VALVE CONTROL DETAILS, REFER TO DETAIL 1C ON P&ID H-16-000003-02.
5. FOR ON / OFF VALVE CONTROLS DETAILS, REFER TO DETAIL 1A ON P&ID H-16-000003-02.
6. DELETED.
7. DELETED.
8. THE FFT VAULT SHALL HAVE A STAINLESS STEEL FLOOR LINER WITH WALL SEALANT ABOVE THE LINER..
9. CORROSION INHIBITOR OR FILTER FEED TANK ANTI-FOAMING AGENT CONNECTION.
10. INSTRUMENT TAG SHALL BE PRECEDED BY "202LP-FFA-UT-".
11. SPARE LEFT INTENTIONALLY SHORT FOR POTENTIAL FUTURE DRAIN ADDITION.
12. RISER IS FOR CAMERA AND MANUAL WASHDOWN ACCES S INSIDE THE TANK.
13. INSTRUMENT TAG SHALL BE PRECEDED BY "202LP-FFA-RS-".
14. DELETED.
15. REFER TO DRAWING H-16-000031 FOR VAULT DRAIN.
16. REFER TO DRAWING H-16-000051 FOR PIT DRAINS.
17. TIE-IN FOR ADDING SIMULANT FROM A TANKER TRUCK TO THE FFT VIA A TEMPORARY CONNECTION FOR TESTING.
18. 6" JUMPER CONNECTIONS USE GRAYLOK REMOTE CONNECTORS. ALL OTHER JUMPERS USE PUREX CONNECTORS.
19. FOR DVI ON / OFF CONTROL DETAILS, SEE DETAIL 1E ON P&ID H-16-000003_02.
20. TANK VOLUMES ARE LISTED AS MAXIMUM CAPACITY VALUES (THE VOLUME UP TO THE OVERFLOW ROUNDED TO THE NEAREST 10).
21. CHILLED WATER SUPPLY AND RETURN PIPING INSULATION EXTENDS TO PIT WALL. THERE IS NO PIPING INSULATION INSIDE PIT.
22. DELETED.
23. DELETED.
24. THE FFT PUMP PIT SHALL HAVE EPOXY COATING.
25. ALL INSULATION THICKNESSES TO BE VERIFIED. SEE HOLD ON H-16-000002.
26. REFER TO DRAWING H-16-000105 FOR VAULT AIR INTAKE DETAILS.
27. DELETED.
28. DELETED.
29. XV-106 AND XV-115 ARE HIGH POINT VENT VALVES FOR THE TUBE SIDE OF CFF-F-100 AND CFF-F-101.
30. FLOW NOZZLE REQUIRES USE OF FLOW CONDITIONER (FX). FIVE STRAIGHT PIPE DIAMETERS (5D) UPSTREAM OF FX AND 5D DOWNSTREAM OF FX ARE REQUIRED PRIOR TO CONNECTION WITH VENTURI NOZZLE. 5D REQUIRED DOWNSTREAM OF NOZZLE 5D-FX-5D-NOZZLE-5D).
31. BYPASS VALVE TO BE PROVIDED WITH GEAR OPERATOR.

HOLDS:

1. DELETED.
2. TDH, BRAKE HP AND RATED HP TO BE VERIFIED BY VENDOR DESIGN.
3. FINAL SIZES FOR REDUCERS, PRESSURE VALVE AND PIPING TO BE DETERMINED BY VENDOR AND HTA RESULTS.

REVISION APPROVAL RECORD					REV 1	DRAWING STATUS				
DISCIPLINE	BY	DATE	DISCIPLINE	BY	DATE	ISSUED	REV	DATE	SIDE	PEM
ARCH.	N/A		MECHANICAL	DS	05/15/17	PRELIMINARY				
BUILDING SERVICES	WL	05/15/17	PIPING	MJ	05/15/17					
CIVIL	N/A		PROCESS	MW	05/15/17					
ELECTRICAL	LC	05/15/17	QA / QC	PB	05/15/17					
ENVIRON.	N/A		STRUCTURAL	N/A		RE-APPROVED FOR DESIGN	1	05/15/17	MW	DP
GEN. ARRANG.	N/A		FP	KB	05/15/17					
I & C	HF	05/15/17				NOT APPROVED FOR CONSTRUCTION UNLESS SIGNED AND DATED. DESTROY ALL PRINTS BEARING EARLIER DATE AND/OR REV.NO.				

AECOM
URS ENERGY & CONSTRUCTION Inc. - an AECOM Company
ATKINS
AREVA

AECOM PROJECT NO.: 31269

DWG NUMBER	TITLE
DRAWING TRACEABILITY LIST	

REF NUMBER	TITLE
NEXT USED ON H-16-000001	REFERENCES

ISSUED FOR 90% DESIGN
NOT FOR CONSTRUCTION

REV	DESCRIPTION	ORIG	CHK	APVD	IDV	DATE
1	RE-APPROVED FOR DESIGN INCORPORATES 31269-21-OCN-0001	GK	TN	MW	MW	05/15/17
0	ISSUED FOR DESIGN	GK	TN	MW	N/A	09/19/16

REVISIONS

SUN NO. 202LP

NED NO. 7004

CAUTION
NOT COMPLETE WITHOUT CURRENT CHANGE DOCUMENTS FROM DATABASE

ATTENTION
DESTROY THIS DOCUMENT BY SHREDDING
MAY CONTAIN SENSITIVE INFORMATION

NAME	SIG	DATE
DRAWN BY		
CHECKED BY		
APPROVAL		
DISCIPLINE MANAGER		
PROJECT MANAGER		

U.S. DEPARTMENT OF ENERGY
Office of River Protection

LAWPS
P&ID
FILTER FEED TANK VAULT

F H-16-000022 1 1

SCALE NONE

PLOTTED

SIZE 15_2 (841x1189 (A0))

DRAWING

H-16-000022-2

LAWPS P&ID FILTER FEED TANK VAULT

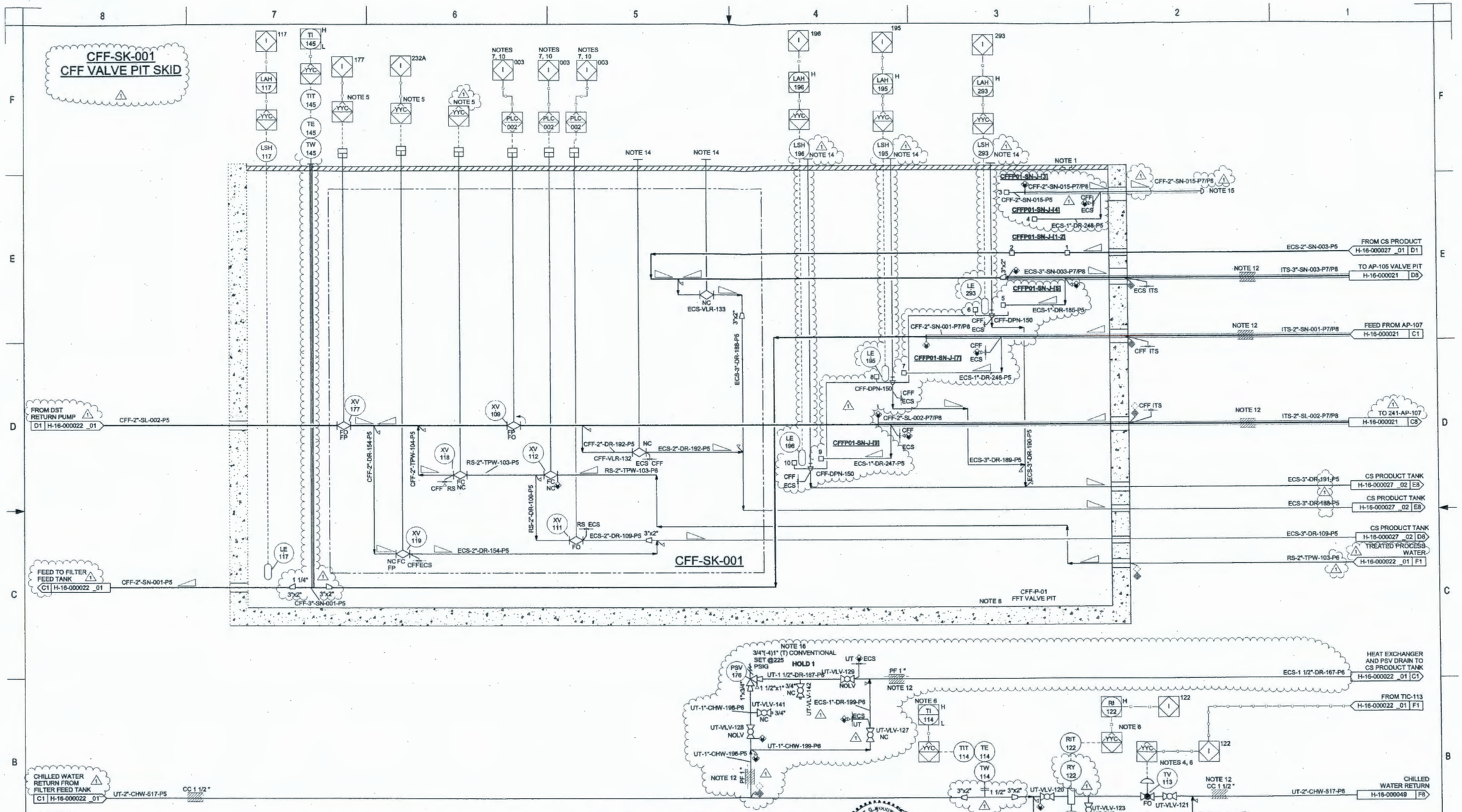

NOTES:

1. ALL VAULTS AND VALVE PITS SHALL BE PROVIDED WITH REMOVABLE PLUGS FOR CAMERA ACCESS AND RADIATION MONITORING. REMOVABLE PLUGS ARE ALSO FOR MANUAL WASH OF VAULT/PIT. NUMBER AND LOCATION TO BE DEFINED ON VAULT/PIT DRAWINGS.
2. ALL EQUIPMENT, MANUAL VALVE AND SPECIALTY ITEM TAGS SHALL BE PRECEDED BY "202LP-FFA-" UNLESS OTHERWISE NOTED.
3. INSTRUMENT TAGS SHALL BE PRECEDED BY "202LP-FFA-CFF-" UNLESS OTHERWISE NOTED.
4. FOR MODULATING VALVE CONTROL DETAILS, REFER TO DETAIL 1C ON P&ID H-16-000003, SHEET 02.
5. FOR ON / OFF VALVE CONTROLS DETAILS, REFER TO DETAIL 1A ON P&ID H-16-000003, SHEET 02.
6. INSTRUMENT TAG SHALL BE PRECEDED BY "202LP-FFA-UT-".
7. INSTRUMENT TAG SHALL BE PRECEDED BY "202LP-FFA-RS-".
8. REFER TO DRAWING H-16-000051 FOR PIT DRAINS.
9. ALL JUMPERS USE PUREX CONNECTORS.
10. FOR ON / OFF CONTROL DETAILS, SEE DETAIL 1E ON P&ID H-16-000003, SHEET 02.
11. CHILLED WATER SUPPLY AND RETURN PIPING INSULATION EXTENDS TO PIT WALL. THERE IS NO PIPING INSULATION INSIDE PIT.
12. ALL INSULATION THICKNESSES TO BE VERIFIED. SEE HOLD ON H-16-000002.
13. DELETED.
14. ALL MANUAL VALVES TO HAVE SPINDLES EXTENDED THROUGH SHIELDING FOR OPERATION.
15. TO ELIMINATE CS ELUATE RETURN TO THE DST SYSTEM, JUMPER AND SPOOL PIECE CAN BE RECONFIGURED TO AN ALTERNATE DISPOSITION PATHWAY FOR THE FILTERED PRODUCT.
16. PSV-176 AND ADJACENT PIPING ARE ABOVE THE FLOOR PIT AND IN THE WEATHER ENCLOSURE.
17. ACTUATORS ASSOCIATED WITH THE VALVE SKID ARE PART OF THE VENDOR SCOPE.

HOLDS:

1. PSV SIZE INCLUDING INLET AND OUTLET LINE SIZES TO BE VERIFIED BY PSV CALCULATION.

For Permitting

REVISION APPROVAL RECORD					REV 1
DISCIPLINE	BY	DATE	DISCIPLINE	BY	DATE
ARCH.	N/A		MECHANICAL	DS	05/15/17
BUILDING SERVICES	WL	05/15/17	PIPING	MJ	05/15/17
CIVIL	N/A		PROCESS	MW	05/15/17
ELECTRICAL	LC	05/15/17	QA / QC	PB	05/15/17
ENVIRON.	N/A		STRUCTURAL	N/A	
GEN. ARRANG.	N/A		FP	KB	05/15/17
I & C	HF	05/15/17			

DRAWING STATUS				
ISSUED	REV	DATE	SDE	PEM
PRELIMINARY				
RE-APPROVED FOR DESIGN	1	05/15/17	MW	MS For DP

NOT APPROVED FOR CONSTRUCTION UNLESS SIGNED AND DATED. DESTROY ALL PRINTS BEARING EARLIER DATE AND/OR REV NO.

AECOM
URS ENERGY & CONSTRUCTION Inc. - an AECOM Company
ATKINS
AREVA

AECOM PROJECT NO.: 31269

DWG NUMBER	TITLE
DRAWING TRACEABILITY LIST	

REF NUMBER	TITLE
REFERENCES	
NEXT USED ON H-16-000001	

ISSUED FOR 90% DESIGN
NOT FOR CONSTRUCTION

REV	DESCRIPTION	ORIG	CHK	APVD	IDV	DATE
1	RE-APPROVED FOR DESIGN INCORPORATES 31269-21-DCN-0001	GK	TN	MW	WW	05/15/17

REVISIONS

202LP

7004

CAUTION
NOT COMPLETE WITHOUT CURRENT CHANGE DOCUMENTS FROM DATABASE

ATTENTION
DESTROY THIS DOCUMENT BY SHREDDING
MAY CONTAIN SENSITIVE INFORMATION

NAME	DATE	SIGNATURE
DRAWN BY		
CHECKED BY / APPROVED		
ENGINEER / TECHNICIAN		
DRAWING		

U.S. DEPARTMENT OF ENERGY
Office of River Protection

LAWPS
P&ID
FILTER FEED TANK VAULT

F H-16-000022 2 1

SCALE NONE

DRAWING

H-16-000023

LAWPS P&ID CROSS FLOW FILTER PIT

CFF-F-100 CROSS FLOW FILTER

FEED FLOWRATE: 1025.0 GPM
PERMEATE FLOWRATE: 15.2 GPM
PARTICLE SIZE REMOVAL: 99.8%, > 0.1 MICRON
PRESSURE DROP (CLEAN): 7.5 PSI
PRESSURE DROP (DIRTY): 100 PSI
SIZE: 1' 11" ID x 13' 1" T/T
DESIGN PRESS: 350 PSIG / FULL VACUUM
DESIGN TEMP: 170 °F
MATERIALS OF CONSTRUCTION: 316/316L SS

CFF-F-101 CROSS FLOW FILTER

FEED FLOWRATE: 1025.0 GPM
PERMEATE FLOWRATE: 15.2 GPM
PARTICLE SIZE REMOVAL: 99.8%, > 0.1 MICRON
PRESSURE DROP (CLEAN): 7.5 PSI
PRESSURE DROP (DIRTY): 100 PSI
SIZE: 1' 11" ID x 13' 1" T/T
DESIGN PRESS: 350 PSIG / FULL VACUUM
DESIGN TEMP: 170 °F
MATERIALS OF CONSTRUCTION: 316/316L SS

CFF-EXCH-104 PERMEATE HEAT EXCHANGER

TUBE SIDE FLOWRATE: 14.0 GPM
SHELL SIDE FLOWRATE: 7.2 GPM
DUTY: 35486 BTU/HR
SHELL SIDE DESIGN PRESS: 350 PSIG
SHELL SIDE DESIGN TEMP: 200 °F
TUBE SIDE DESIGN PRESS: 350 PSIG
TUBE SIDE DESIGN TEMP: 170 °F
MATERIALS OF CONSTRUCTION: 316/316L SS

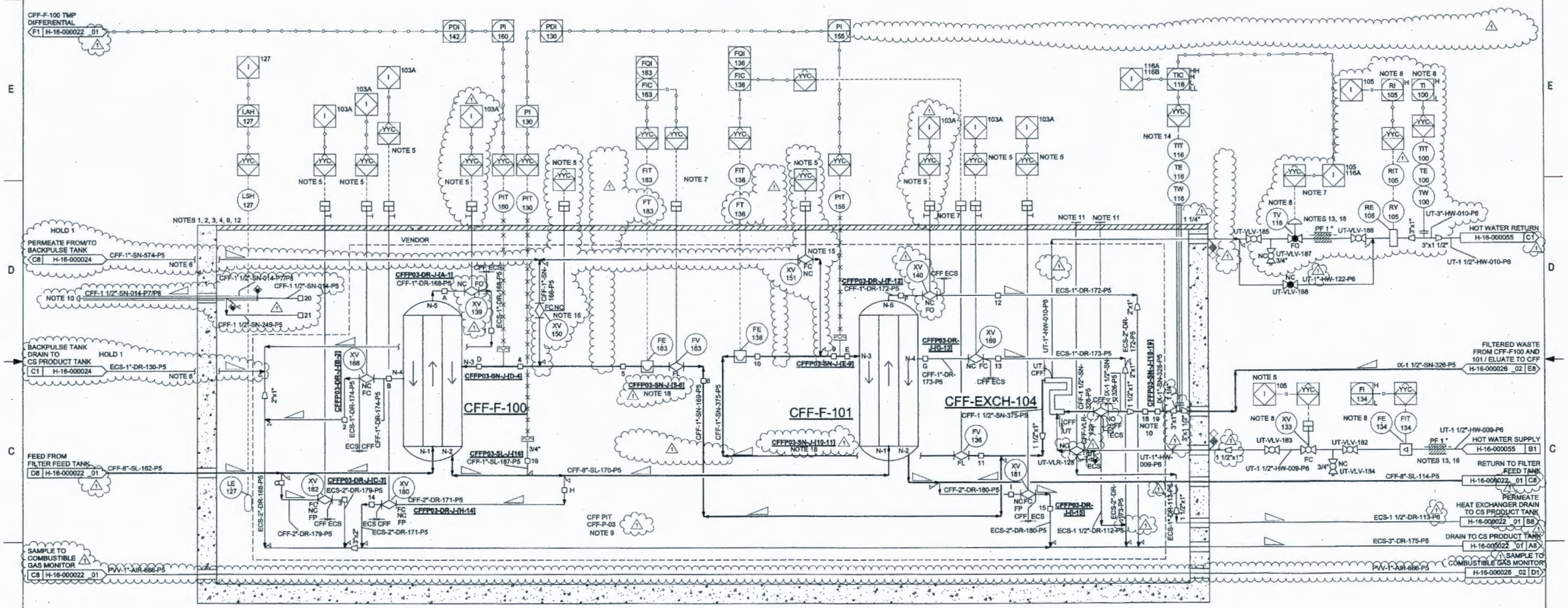

NOTES:

1. ALL VAULTS AND VALVE PITS SHALL BE PROVIDED WITH REMOVABLE PLUGS FOR CAMERA ACCESS AND RADIATION MONITORING. REMOVABLE PLUGS ARE ALSO PROVIDED FOR MANUAL WASH OF VAULT/PIT. NUMBER AND LOCATION TO BE DEFINED ON VAULT/PIT DRAWINGS.
2. REFER TO DRAWING H-16-000051 FOR PIT DRAINS.
3. ALL EQUIPMENT AND MANUAL VALVE TAGS SHALL BE PRECEDED BY "202LP-CFA-" UNLESS OTHERWISE NOTED.
4. ALL INSTRUMENT TAGS SHALL BE PRECEDED BY "202LP-CFA-CFF-" UNLESS OTHERWISE NOTED.
5. FOR ON / OFF VALVE CONTROLS DETAILS REFER TO DETAIL 1A P&ID H-16-000003-02.
6. LINE CONTINUES FROM INSIDE PIT. LINE DOES NOT PENETRATE WALL.
7. FOR MODULATING VALVE CONTROL DETAILS, REFER TO DETAIL 1C ON P&ID H-16-000003-02.
8. INSTRUMENT TAG SHALL BE PRECEDED BY "202LP-CFA-UT-".
9. THE CFF PIT SHALL HAVE A STAINLESS STEEL FLOOR LINER/EPOXY WALL ABOVE LINER.
10. TO ELIMINATE CS ELUATE RETURN TO THE DST SYSTEM, JUMPER AND SPOOL PIECE CAN BE RECONFIGURED TO AN ALTERNATE DISPOSITION PATHWAY FOR THE FILTERED PRODUCT.
11. ALL MANUAL VALVES TO HAVE SPINDLES EXTENDED THROUGH SHIELDING FOR OPERATION.
12. ALL JUMPER CONNECTIONS USE PUREX CONNECTOR.
13. HOT WATER SUPPLY AND RETURN PIPING INSULATION AND HEAT TRACING EXTENDS TO PIT WALL. THERE IS NO PIPING INSULATION OR TRACING INSIDE PIT.
14. INSTRUMENT TAG SHALL BE PRECEDED BY "202LP-CFA-IX-".
15. FAST ACTING VALVE IS SPECIFIED.
16. ALL INSULATION THICKNESSES TO BE VERIFIED. SEE HOLD ON H-16-000002.
17. DELETED.
18. CFFP03-SN-J-[5-6] AND CFFP03-SN-J-[10-11] ARE IN A SINGLE ASSEMBLY.

HOLDS:

1. IMPLEMENTATION OF THE BACKPULSE SYSTEM TO BE DETERMINED BASED ON TESTING RESULTS. SEE DRAWING H-16-000024.
2. DELETED.

REVISION APPROVAL RECORD					REV 1
DISCIPLINE	BY	DATE	DISCIPLINE	BY	DATE
ARCH.	N/A		MECHANICAL	DS	05/15/17
BUILDING SERVICES	WL	05/15/17	PIPING	MJ	05/15/17
CIVIL	N/A		PROCESS	MW	05/15/17
ELECTRICAL	LC	05/15/17	QA / QC	PB	05/15/17
ENVIRON.	N/A		STRUCTURAL	N/A	
GEN. ARRANG.	N/A		FP	KB	05/15/17
I & C	HF	05/15/17			

DRAWING STATUS				
ISSUED	REV	DATE	SDE	PEM
PRELIMINARY				
RE-APPROVED FOR DESIGN	1	05/15/17	MW	MS For DP

NOT APPROVED FOR CONSTRUCTION UNLESS SIGNED AND DATED. DESTROY ALL PRINTS BEARING EARLIER DATE AND/OR REV NO.

AECOM
URS ENERGY & CONSTRUCTION Inc. - an AECOM Company
ATKINS
AREVA

AECOM PROJECT NO.: 31289

DWG NUMBER | TITLE | DRAWING TRACEABILITY LIST

REF NUMBER | TITLE | REFERENCES
NEXT USED ON H-16-000001

ISSUED FOR 90% DESIGN
NOT FOR CONSTRUCTION

REV	DESCRIPTION	ORIG	CHK	APVD	IDV	DATE
1	RE-APPROVED FOR DESIGN INCORPORATES 31289-21-DCN-0001	GK	TN	MW	WW	05/15/17
0	APPROVED FOR DESIGN	GK	TN	MW	N/A	09/19/16

REVISIONS

SCALE 202LP
REFERENCE 7004

CAUTION
NOT COMPLETE WITHOUT CURRENT CHANGE DOCUMENTS FROM DATABASE

ATTENTION
DESTROY THIS DOCUMENT BY SHREDDING
MAY CONTAIN SENSITIVE INFORMATION

NAME	DATE
DRAWN BY	
DESIGN APPROVAL	
PROJECT ENGINEER	
MANAGER	

U.S. DEPARTMENT OF ENERGY
Office of River Protection

LAWPS
P&ID
CROSS FLOW FILTER PIT

SIZE F | DRAWING NUMBER H-16-000023 | SHEET 1 | REV 1
SCALE NONE
PLOTTED

DRAWING

H-16-000024

LAWPS P&ID BACKPULSE SYSTEM [ON HOLD]

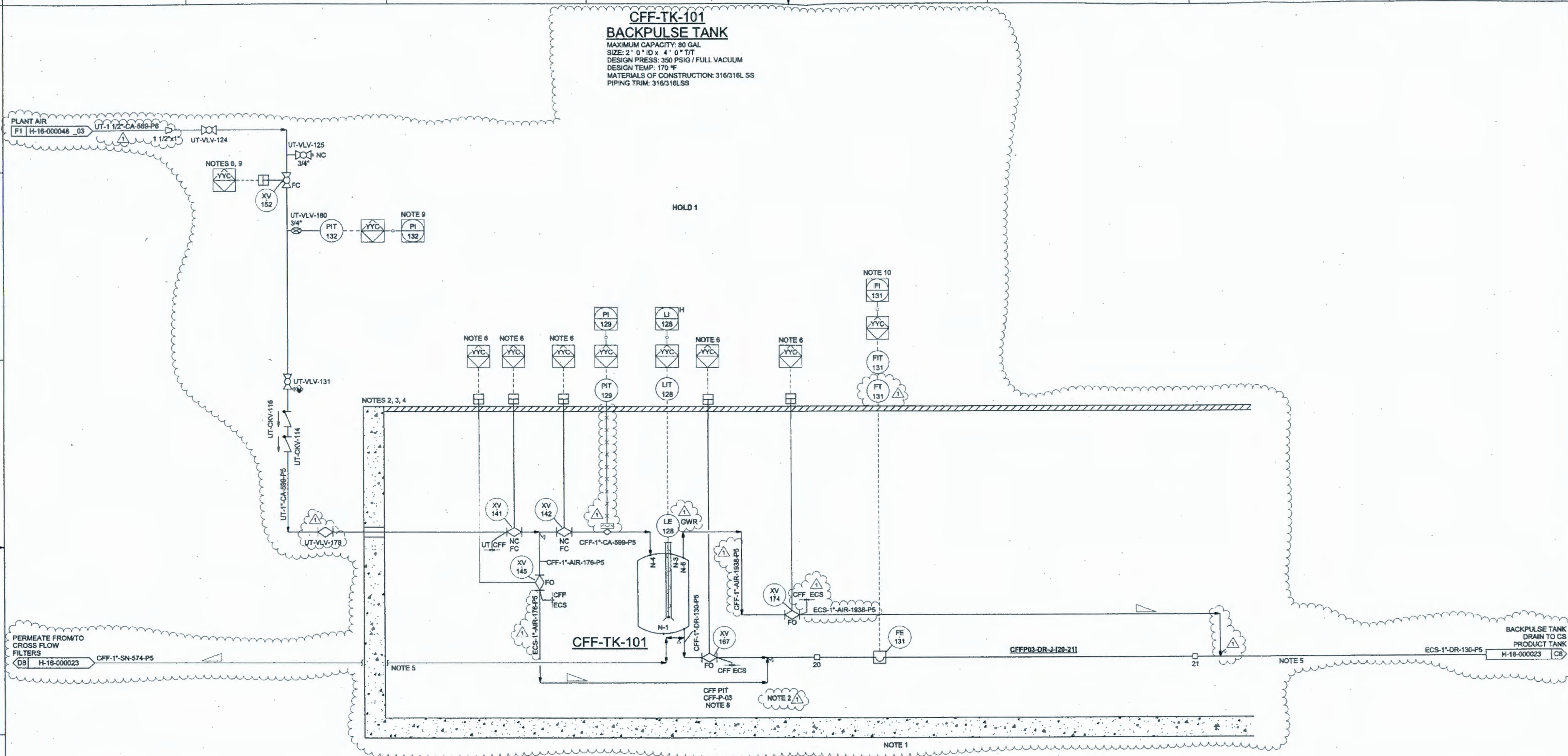

NOTES:

1. REFER TO DRAWING H-16-000051 FOR PIT DRAINS.
2. ALL VAULTS AND VALVE PITS SHALL BE PROVIDED WITH REMOVABLE PLUG FOR CAMERA ACCESS AND RADIATION MONITORING.
3. ALL EQUIPMENT AND MANUAL VALVE TAGS SHALL BE PRECEDED BY "202LP-CFA-" UNLESS OTHERWISE NOTED.
4. ALL INSTRUMENT TAGS SHALL BE PRECEDED BY "202LP-CFA-CFF-" UNLESS OTHERWISE NOTED.
5. LINE CONTINUES FROM INSIDE PIT. LINE DOES NOT PENETRATE WALL.
6. FOR ON / OFF VALVE CONTROLS DETAILS REFER TO DETAIL 1A ON P&ID H-16-000003-02 (1)
7. EQUIPMENT DESCRIPTION VALUES TO BE UPDATED WITH DESIGN DEVELOPMENT.
8. THE CFF PIT SHALL HAVE A STAINLESS STEEL FLOOR LINER/EPOXY WALLS ABOVE LINER.
9. INSTRUMENT TAG SHALL BE PRECEDED BY "202LP-CFA-UT-".
10. INSTRUMENT TAG SHALL BE PRECEDED BY "202LP-CFA-ECS-".
11. DELETED. (1)

HOLDS:

1. IMPLEMENTATION TO BE DETERMINED BASED ON TESTING RESULTS.

REVISION APPROVAL RECORD				REV 1	
DISCIPLINE	BY	DATE	DISCIPLINE	BY	DATE
ARCH.	N/A		MECHANICAL	DS	05/15/17
BUILDING SERVICES	WL	05/15/17	PIPING	MJ	05/15/17
CIVIL	N/A		PROCESS	MW	05/15/17
ELECTRICAL	LC LC		QA / QC	PS	05/15/17
ENVIRON.	N/A	05/15/17	STRUCTURAL	N/A	
GEN. ARRANG.	N/A		FP	KB	05/15/17
I & C	BF	05/15/17			

DRAWING STATUS				
ISSUED	REV	DATE	SDE	PEM
PRELIMINARY				
RE-APPROVED FOR DESIGN	1	05/15/17	MW	MS For DP

NOT APPROVED FOR CONSTRUCTION UNLESS SIGNED AND DATED. DESTROY ALL PRINTS BEARING EARLIER DATE AND/OR REV.NO.

AECOM
URS ENERGY & CONSTRUCTION Inc. - an AECOM Company
ATKINS
AREVA
AECOM PROJECT NO.: 31269

DWG NUMBER	TITLE
DRAWING TRACEABILITY LIST	

REF NUMBER	TITLE
REFERENCES	
NEXT USED ON	H-16-000001

ISSUED FOR 90% DESIGN
NOT FOR CONSTRUCTION

REV	DESCRIPTION	ORIG	CHK	APVD	IDV	DATE
1	RE-APPROVED FOR DESIGN	GK	TN	MW	WW	05/15/17
0	APPROVED FOR DESIGN	GK	TN	MW	BC	09/19/16

REVISIONS

202LP
7004

CAUTION
NOT COMPLETE WITHOUT CURRENT CHANGE DOCUMENTS FROM DATABASE

ATTENTION
DESTROY THIS DOCUMENT BY SHREDDING
MAY CONTAIN SENSITIVE INFORMATION

U.S. DEPARTMENT OF ENERGY
Office of River Protection

LAWPS
P&ID
BACKPULSE SYSTEM

SIZE	DRAWING NUMBER	SHEET	REV
F	H-16-000024	1	1

SCALE NONE

5-16-17
For Permitting

DRAWING

H-16-000025

LAWPS P&ID IX PIT

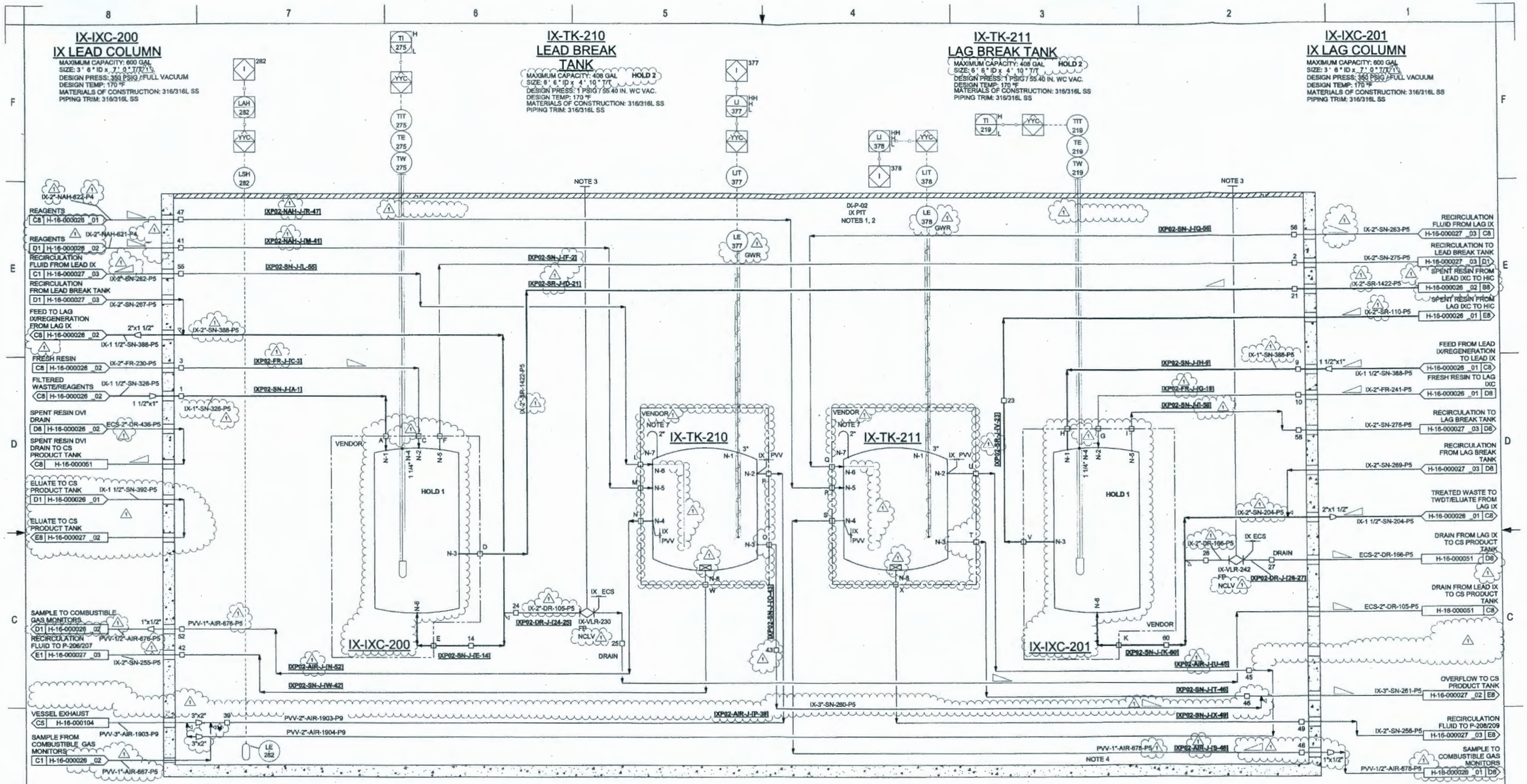

NOTES:

1. IX PIT SHALL HAVE STAINLESS STEEL FLOOR LINER AND EPOXY WALLS ABOVE LINER.
2. ALL VAULTS AND VALVE PITS SHALL BE PROVIDED WITH REMOVABLE PLUGS FOR CAMERA ACCESS AND RADIATION MONITORING. REMOVABLE PLUGS ARE ALSO PROVIDED FOR MANUAL WASHING OF VAULT/PIT. NUMBER AND LOCATION TO BE DEFINED ON VAULT PIT DRAWINGS.
3. ALL MANUAL VALVES TO HAVE SPINDLES EXTENDING THROUGH SHIELDING FOR OPERATION.
4. REFER TO DRAWING H-16-000051 FOR PIT FLOOR DRAINS.
5. ALL EQUIPMENT AND MANUAL VALVE TAGS SHALL BE PRECEDED BY "202LP-IXA-" EXCEPT WHERE NOTED.
6. ALL INSTRUMENT TAGS SHALL BE PRECEDED BY "202LP-IXA-IX-".
7. REFER TO DRAWING H-16-000105 FOR PIT AIR INTAKE DETAILS.
8. DELETED.

HOLDS:

1. FINAL IX COLUMN DESIGN IS DEPENDENT ON DESIGN OF INTERNALS WHICH STILL REQUIRE TESTING.
2. BREAK TANK SIZE WILL BE CONFIRMED ONCE FLAMMABLE GAS GENERATION RATES ARE VALIDATED TO ALLOW SIZING CALCULATION TO BE FINALIZED.

MARK G. WOODSIDE, STATE OF WASHINGTON, 51519, REGISTERED PROFESSIONAL ENGINEER, 5-16-17
For Permitting

REVISION APPROVAL RECORD					REV 1
DISCIPLINE	BY	DATE	DISCIPLINE	BY	DATE
ARCH.	N/A		MECHANICAL	DS	05/15/17
BUILDING SERVICES	WL	05/15/17	PIPING	MJ	05/15/17
CIVIL	N/A		PROCESS	MW	05/15/17
ELECTRICAL	LC	05/15/17	QA / QC	PBS	05/15/17
ENVIRON.	N/A		STRUCTURAL	N/A	
GEN. ARRANG.	N/A		FP		05/15/17
I & C	HF	05/15/17			

DRAWING STATUS					
ISSUED	REV	DATE	SDE	PEM	
PRELIMINARY					
RE-APPROVED FOR DESIGN	1	05/15/17	MW	MS	For DP

NOT APPROVED FOR CONSTRUCTION UNLESS SIGNED AND DATED. DESTROY ALL PRINTS BEARING EARLIER DATE AND/OR REV NO.

AECOM
URS ENERGY & CONSTRUCTION Inc. - an AECOM Company
ATKINS
AREVA

AECOM PROJECT NO.: 31289

DWG NUMBER	TITLE
DRAWING TRACEABILITY LIST	

REF NUMBER	TITLE
REFERENCES	

NEXT USED ON H-16-000001

ISSUED FOR 90% DESIGN
NOT FOR CONSTRUCTION

REV	DESCRIPTION	ORIG	CHK	APVD	IDV	DATE
1	RE-APPROVED FOR DESIGN	RA	RW	MW	WW	05/15/17
0	ISSUED FOR DESIGN	RA	JB	MW	BC	09/19/16

REVISIONS

202LP

7004

CAUTION
NOT COMPLETE WITHOUT CURRENT CHANGE DOCUMENTS FROM DATABASE

ATTENTION
DESTROY THIS DOCUMENT BY SHREDDING
MAY CONTAIN SENSITIVE INFORMATION

NAME

U.S. DEPARTMENT OF ENERGY
Office of Rail Products

LAWPS
P&ID
IX PIT

F | H-16-000025 | 1 | 1

SIZE NONE

DRAWING

H-16-000026-1

LAWPS P&ID IX VALVE PIT

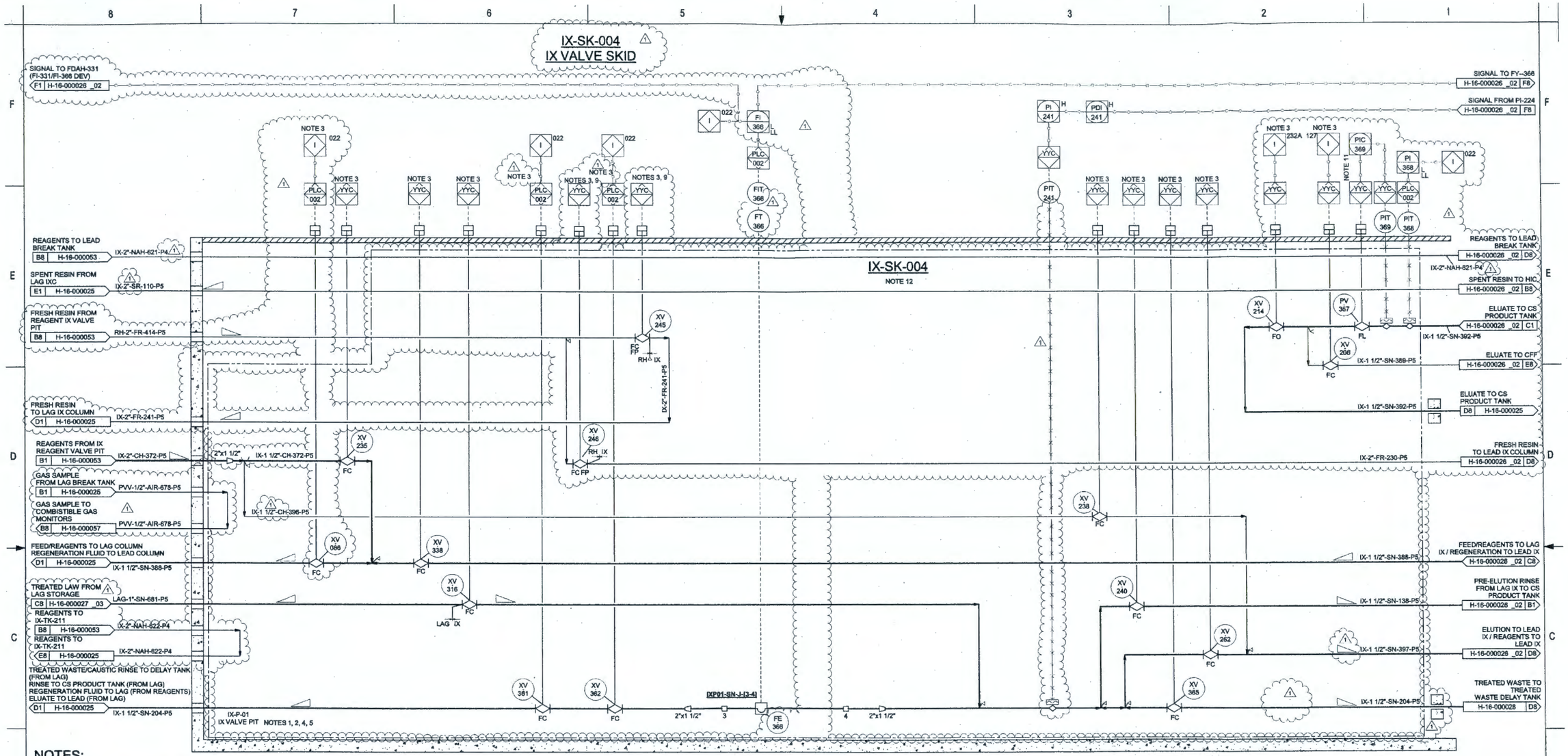

NOTES:

1. IX VALVE PIT SHALL HAVE STAINLESS STEEL FLOOR LINER AND EPOXY WALLS ABOVE LINER.
2. ALL VAULTS AND VALVE PITS SHALL BE PROVIDED WITH REMOVABLE PLUGS FOR CAMERA ACCESS AND RADIATION MONITORING. REMOVABLE PLUGS ARE ALSO PROVIDED FOR MANUAL WASHING OF VAULT/PIT. NUMBER AND LOCATION TO BE DEFINED ON VAULT PIT DRAWINGS.
3. FOR ON / OFF VALVE CONTROL DETAILS, REFER TO DETAIL 1A ON P&ID H-16-000003, SHEET 02.
4. ALL INSTRUMENT TAGS SHALL BE PRECEDED BY "202LP-IXA-IX-" UNLESS OTHERWISE NOTED.
5. REFER TO DRAWING H-16-000051 FOR PIT FLOOR DRAINS.
6. DELETED.
7. ALL EQUIPMENT AND MANUAL VALVE TAGS SHALL BE PRECEDED BY "202LP-IXA-".
8. DELETED.
9. INSTRUMENT TAG SHALL BE PRECEDED BY "202LP-IXA-RH-".
10. DELETED.
11. FOR MODULATING VALVE CONTROL DETAILS, REFER TO DETAIL 1C ON P&ID H-16-000003, SHEET 02.
12. ACTUATORS ASSOCIATED WITH THE VALVE SKID ARE PART OF THE VENDOR SCOPE.

STATE OF WASHINGTON 31519 REGISTERED PROFESSIONAL ENGINEER MARK D. WOODWORTH
5-10-17
For Permitting

REVISION APPROVAL RECORD				REV 1	
DISCIPLINE	BY	DATE	DISCIPLINE	BY	DATE
ARCH.	N/A		MECHANICAL	DS	05/15/17
BUILDING SERVICES	WL	05/15/17	PIPING	MJ	05/15/17
CIVIL	N/A		PROCESS	MW	05/15/17
ELECTRICAL	LC	05/15/17	QA / QC	PB	05/15/17
ENVIRON.	N/A		STRUCTURAL	N/A	
GEN. ARRANG.	N/A		FP	KB	05/15/17
I & C	HF	05/15/17			

DRAWING STATUS				
ISSUED	REV	DATE	SDE	PEM
PRELIMINARY				
RE-APPROVED FOR DESIGN	1	05/15/17	MW	MS

For DP

NOT APPROVED FOR CONSTRUCTION UNLESS SIGNED AND DATED. DESTROY ALL PRINTS BEARING EARLIER DATE AND/OR REV. NO.

AECOM
URS ENERGY & CONSTRUCTION Inc. - an AECOM Company
ATKINS
AREVA

AECOM PROJECT NO.: 31269

DWG NUMBER	TITLE
DRAWING TRACEABILITY LIST	

REF NUMBER	TITLE
REFERENCES	

NEXT USED ON H-16-000001

ISSUED FOR 90% DESIGN
NOT FOR CONSTRUCTION

REV	DESCRIPTION	ORIG	CHK	APVD	IDV	DATE
1	RE-APPROVED FOR DESIGN INCORPORATES 31269-21-DCN-0001	RA	RW	MW	WW	05/15/17
0	ISSUED FOR DESIGN	RA	JB	MW	BC	09/19/16

REVISIONS

A.E.CO. NO. 202LP

MODEL NO. 7004

CAUTION
NOT COMPLETE WITHOUT CURRENT CHANGE DOCUMENTS FROM DATABASE

ATTENTION
DESTROY THIS DOCUMENT BY SHREDDING MAY CONTAIN SENSITIVE INFORMATION

NAME	DATE	COMPANY
DRAWN BY		
DESIGN APPROVAL		
SUPERVISOR ENGINEER		
DESIGNER		

U.S. DEPARTMENT OF ENERGY
Office of River Protection

LAWPS
P&ID
IX VALVE PIT

SIZE F | DRAWING NUMBER H-16-000026 | SHEET 1 | REV 1

SCALE NONE

PLOTTED

DRAWING

H-16-000026-2

LAWPS P&ID IX VALVE PIT

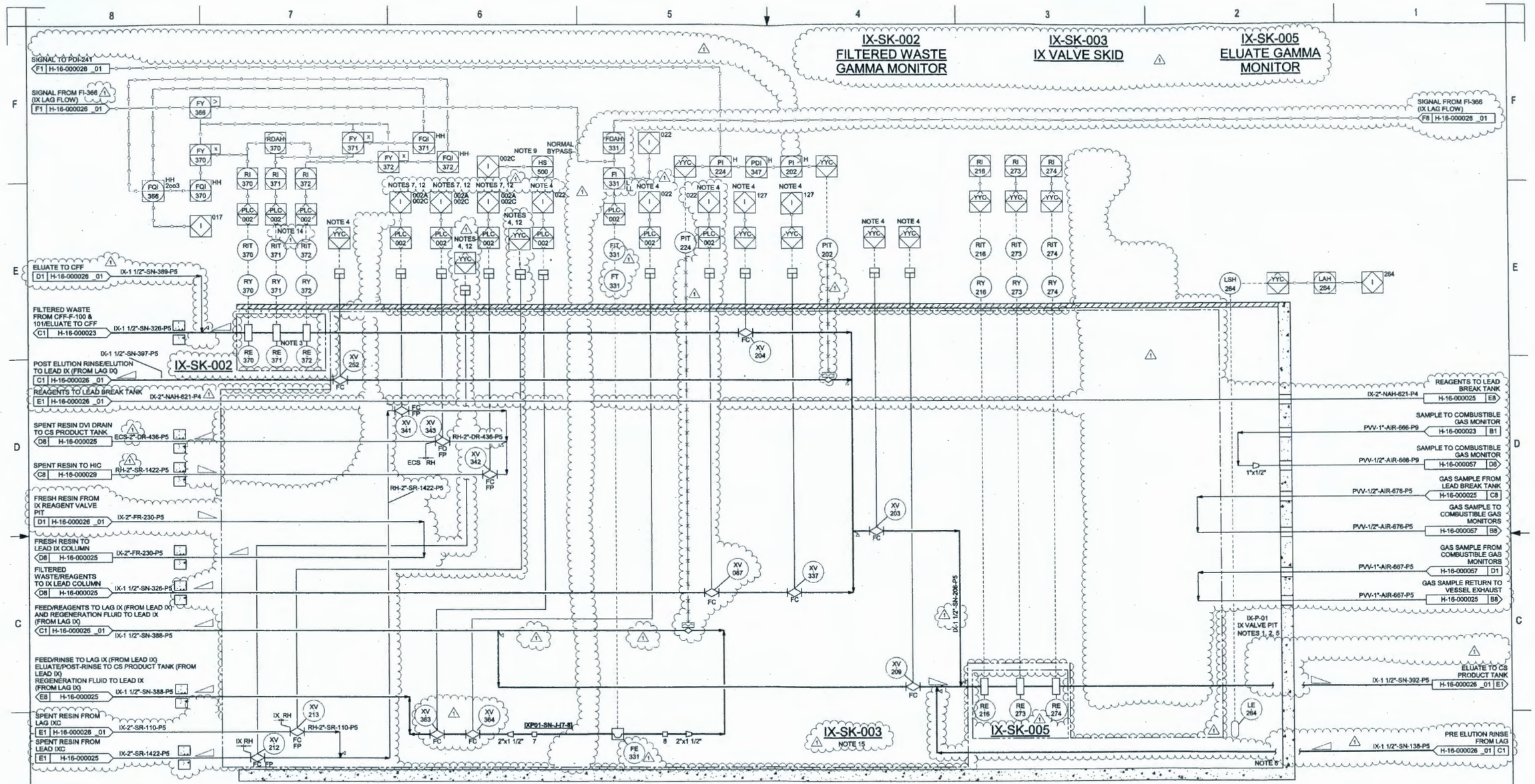

NOTES:

1. IX VALVE PIT SHALL HAVE STAINLESS STEEL FLOOR LINER AND EPOXY WALLS ABOVE LINER.
2. ALL VAULTS AND VALVE PITS SHALL BE PROVIDED WITH REMOVABLE PLUGS FOR CAMERA ACCESS AND RADIATION MONITORING. REMOVABLE PLUGS ARE ALSO PROVIDED FOR MANUAL WASHING OF VAULT/PIT. NUMBER AND LOCATION TO BE DEFINED ON VAULT PIT DRAWINGS.
3. RE-370, RE-371 AND RE-372 ARE GAMMA MONITORS, LOGIC IS 2 OF 3 VOTING.
4. FOR ON / OFF VALVE CONTROL DETAILS, REFER TO DETAIL 1A ON P&ID H-16-000003, SHEET 02.
5. ALL INSTRUMENT TAGS SHALL BE PRECEDED BY "202LP-IXA-IX-".
6. REFER TO DRAWING H-16-000051 FOR PIT FLOOR DRAINS.
7. FOR DVI ON / OFF VALVE CONTROLS DETAIL REFER TO DETAIL 1D ON P&ID H-16-000003, SHEET 02.
8. DELETED.
9. MODE SWITCH IS IN "NORMAL" FOR OPERATING MODE AND IN "BYPASS" FOR RESIN REMOVAL MODE.
10. DELETED.
11. DELETED.
12. INSTRUMENT TAG IS PRECEDED BY "202LP-IXA-RH".
13. DELETED.
14. SIS RATEMETERS RIT-370, RIT-371 AND RIT-372 TO HAVE ADDITIONAL 4-20MA SIGNAL OUTPUT HARDWIRED TO PCS. ASSOCIATED CONTROL LOGIC SHOWN DEPICTED ON-SHEET FOR SIS WILL BE DUPLICATED IN PCS.
15. ACTUATORS ASSOCIATED WITH THE VALVE SKID ARE PART OF THE VENDOR SCOPE.

REVISION APPROVAL RECORD					REV 1
DISCIPLINE	BY	DATE	DISCIPLINE	BY	DATE
ARCH.	N/A		MECHANICAL	DS	05/15/17
BLDG SER/R25	WL	05/15/17	PIPING	MJ	05/15/17
CIVIL	N/A		PROCESS	MW	05/15/17
ELECTRICAL	LC	05/15/17	QA / QC	PBE	05/15/17
ENVIRON.	N/A		STRUCTURAL	N/A	
GEN. ARRANG.	N/A		FP	KB	05/15/17
I & C	HF	05/15/17			

DRAWING STATUS				
ISSUED	REV	DATE	SDE	PEM
PRELIMINARY				
RE-APPROVED FOR DESIGN	1	05/15/17	MW	MS For DP

NOT APPROVED FOR CONSTRUCTION UNLESS SIGNED AND DATED. DESTROY ALL PRINTS BEARING EARLIER DATE AND/OR REV NO.

AECOM
URS ENERGY & CONSTRUCTION Inc. - an AECOM Company
ATKINS
AREVA

AECOM PROJECT NO.: 31269

DRAWING TRACEABILITY LIST: DWG NUMBER | TITLE

REFERENCES: REF NUMBER | TITLE

NEXT USED ON H-16-000001

ISSUED FOR 90% DESIGN
NOT FOR CONSTRUCTION

REV	DESCRIPTION	ORIG	CHK	APVD	IDV	DATE
1	RE-APPROVED FOR DESIGN INCORPORATES 31269-21-DCN-0001	RA	RW	MW	WW	05/15/17
0	ISSUED FOR DESIGN	RA	JB	MW	BC	09/19/16

REVISIONS

SUBE NO. 202LP
SUBE NO. 7004

CAUTION
NOT COMPLETE WITHOUT CURRENT CHANGE DOCUMENTS FROM DATABASE

ATTENTION
DESTROY THIS DOCUMENT BY SHREDDING
MAY CONTAIN SENSITIVE INFORMATION

NAME	SIG.	Checked
DRAWN BY		
DRAFTING APPROVAL		
DISCIPLINE ENGINEER		
DESIGNER		

U.S. DEPARTMENT OF ENERGY
Office of River Protection

LAWPS
P&ID
IX VALVE PIT

SIZE F | DRAWING NUMBER H-16-000026 | SHEET 2 | REV 1

SCALE NONE

PLOTTED

MARK G. WOODWORTH
STATE OF WASHINGTON
51519
REGISTERED
PROFESSIONAL ENGINEER
5/16/17
For Drafting

DRAWING

H-16-000027-1

LAWPS P&ID CESIUM TANK VAULT AND PITS SHEET 1

ECS-TK-200
CS PRODUCT TANK

MAXIMUM CAPACITY: 28000 GAL
SIZE: 18' 0" ID x 13' 5" T/T
DESIGN PRESS: 1 PSIG / 55.30 IN. WC VAC.
DESIGN TEMP: 170 °F
PIPING TRIM: 316/316L SS
MATERIALS OF CONSTRUCTION: 316/316L SS
NOTE 14

ECS-P-200
CS TANK TRANSFER PUMP

FLOWRATE: 80 GPM
TDH: 251 FT
HOLD 2
MATERIALS OF CONSTRUCTION: 316/316L SS

ECS-PM-200
CS TANK TRANSFER PUMP MOTOR

RATED HP: 15
BRAKE HP: 11.3
HOLD 1

ECS-EJR-200
CS TANK AGITATION EDUCTOR

FLOWRATE: 124 GPM @ 40 PSIG
MATERIALS OF CONSTRUCTION: 316/316L SS

ECS-P-201
CS TANK TRANSFER PUMP

FLOWRATE: 80 GPM
TDH: 251 FT
HOLD 2
MATERIALS OF CONSTRUCTION: 316/316L SS

ECS-PM-201
CS TANK TRANSFER PUMP MOTOR

RATED HP: 15
BRAKE HP: 11.3
HOLD 1

ECS-EJR-201
CS TANK AGITATION EDUCTOR

FLOWRATE: 124 GPM @ 40 PSIG
MATERIALS OF CONSTRUCTION: 316/316L SS

NOTES:

1. REMOVABLE SAMPLE PLUG. CS PRODUCT TANK SAMPLING METHOD WILL USE A SYRINGE TO EXTRACT SAMPLE FROM LOW POINT POOL. LOW POINT TO BE CREATED BY (2) 3X2 ECCENTRIC REDUCERS.
2. GUIDE TO THERMOWELL.
3. ALL EQUIPMENT AND MANUAL VALVE TAGS SHALL BE PRECEDED BY "202LP-CSA-" EXCEPT WHERE NOTED.
4. INSTRUMENT TAGS SHALL BE PRECEDED BY "202LP-CSA-ECS-" UNLESS OTHERWISE NOTED.
5. FOR ON / OFF VALVE CONTROLS DETAILS. REFER TO TO DETAIL 1A ON P&ID H-16-000003, SHEET 02.
6. REFER TO DRAWING H-16-000051 FOR PIT FLOOR DRAINS.
7. RISER WASH CONNECTION.
8. FOR THREE-WAY VALVE CONTROL DETAIL, REFER TO DETAIL 1B ON P&ID H-16-000003, SHEET 02.
9. VAULT IS LINED WITH STAINLESS STEEL ON THE FLOOR AND SEALANT ABOVE LINER. PIT FLOORS AND WALLS ARE EPOXY COATED.
10. CS PRODUCT TANK HAS (3) 6" RISERS FOR CAMERA AND WASHDOWN ACCESS.
11. REMOVABLE PLUG FOR MANUAL WASH AND CAMERA ACCESS OF VAULT/PIT. NUMBER AND LOCATION TO BE DETERMINED.
12. SPARE LEFT INTENTIONALLY SHORT FOR POTENTIAL FUTURE DRAIN ADDITION.
13. H-16-000027 SHEET 1 SHOWS THE CS PRODUCT TANK MAJOR EQUIPMENT AND SOME INLETS/OUTLETS. H-16-000027 SHEET 2 SHOWS REMAINING INLETS TO CS PRODUCT TANK. H-16-000027 SHEET 3 SHOWS IX INSTRUMENTS AND EQUIPMENT LOCATED WITHIN ECS PITS.
14. TANK VOLUMES ARE LISTED AS MAXIMUM CAPACITY VALUES (THE VOLUME UP TO THE OVERFLOW).
15. INSTRUMENT TAGS ARE PRECEDED BY "202LP-CSA-RS-".
16. FOR DVI ON / OFF VALVE CONTROL DETAILS, SEE DETAIL 1E ON P&ID H-16-000003, SHEET 02.
17. ALL MANUAL VALVES TO HAVE SPINDLES EXTENDING THROUGH SHIELDING FOR OPERATION.

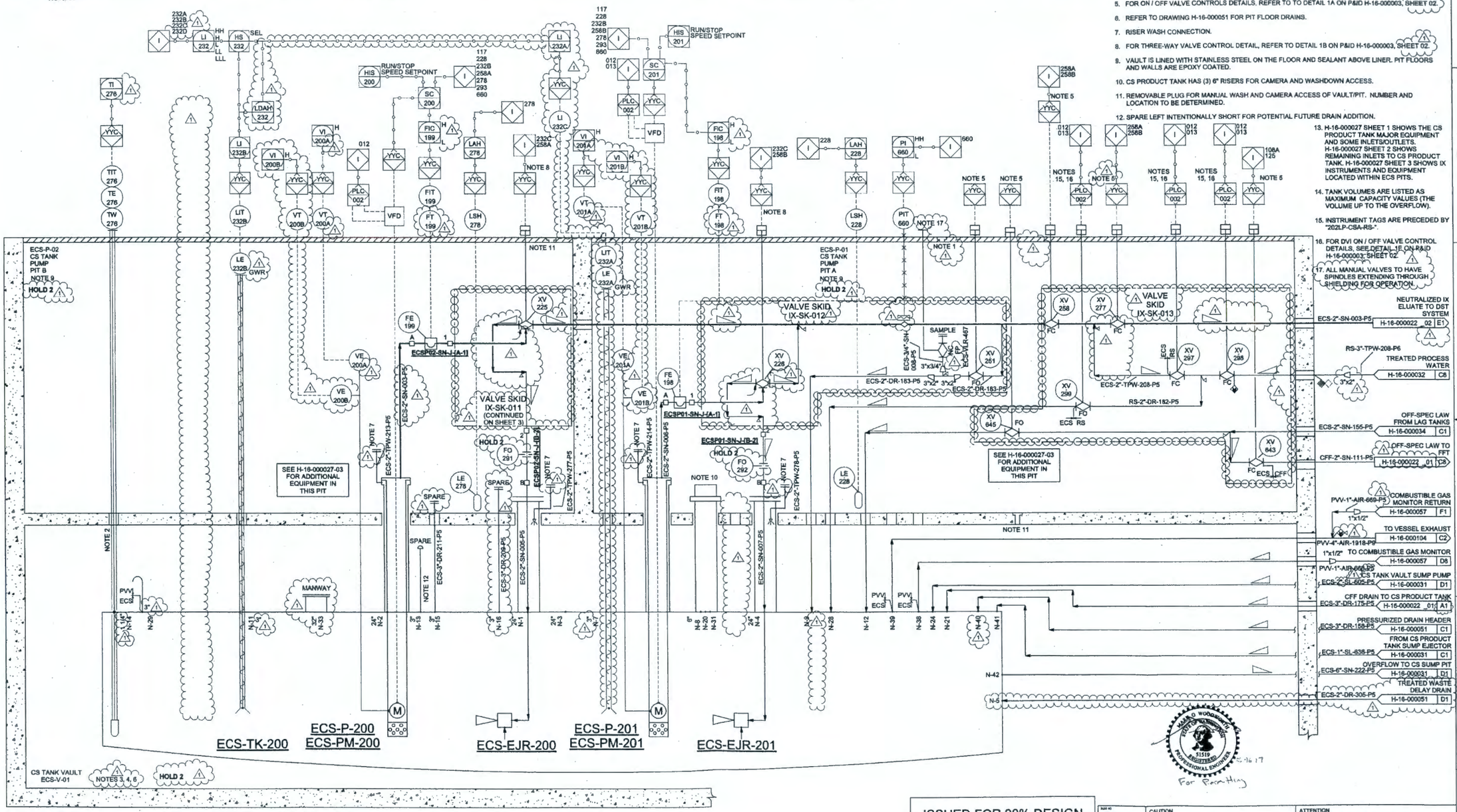

HOLDS:

1. PUMP BRAKE HP AND RATED HP ON HOLD PENDING VENDOR INFORMATION.
2. ON HOLD PENDING REVISION OF PUMP SIZING CALCULATION.

ISSUED FOR 90% DESIGN NOT FOR CONSTRUCTION

REVISION APPROVAL RECORD				REV 1	
DISCIPLINE	BY	DATE	DISCIPLINE	BY	DATE
ARCH.	N/A		MECHANICAL	DS	05/15/17
BUILDING SERVICES	WL	05/15/17	PIPING	MJ	05/15/17
CIVIL	N/A		PROCESS	MW	05/15/17
ELECTRICAL	LC	05/15/17	QA / QC	PB for KB	05/15/17
ENVIRON.	N/A		STRUCTURAL	N/A	
GEN. ARRANG.	N/A		FP	KB	05/15/17
I & C	HF	05/15/17			

DRAWING STATUS				
ISSUED	REV	DATE	SDE	PEM
PRELIMINARY				
RE-APPROVED FOR DESIGN	1	05/15/17	MW	MS For DP

NOT APPROVED FOR CONSTRUCTION UNLESS SIGNED AND DATED. DESTROY ALL PRINTS BEARING EARLIER DATE AND/OR REV NO.

AECOM
URS ENERGY & CONSTRUCTION Inc. - an AECOM Company
ATKINS
AREVA

AECOM PROJECT NO.: 31269

DWG NUMBER	TITLE
DRAWING TRACEABILITY LIST	

REF NUMBER	TITLE
REFERENCES	

NEXT USED ON H-16-000001

REV	DESCRIPTION	ORIG	CHK	APVD	IDV	DATE
1	RE-APPROVED FOR DESIGN INCORPORATES 31269-21-DCN-0001	DM	RW	MW	WW	05/15/17
0	APPROVED FOR DESIGN	DM	JB	MW	BC	09/19/16

REVISIONS

DWG NO 202LP
REF NO 7004

CAUTION
NOT COMPLETE WITHOUT CURRENT CHANGE DOCUMENTS FROM DATABASE

ATTENTION
DESTROY THIS DOCUMENT BY SHREDDING
MAY CONTAIN SENSITIVE INFORMATION

NAME	DATE
DRAWN BY	
DRAFTING APPROVAL	
DISCIPLINE ENGINEER	
DRAWER	

U.S. DEPARTMENT OF ENERGY
Office of River Protection

LAWPS
P&ID
CESIUM TANK VAULT AND PITS

SIZE F | DWG NO H-16-000027 | SHEET 1 | REV 1

SCALE NONE

PLOTTED

DRAWING

H-16-000027-2

LAWPS P&ID CESIUM TANK VAULT AND PITS SHEET 1

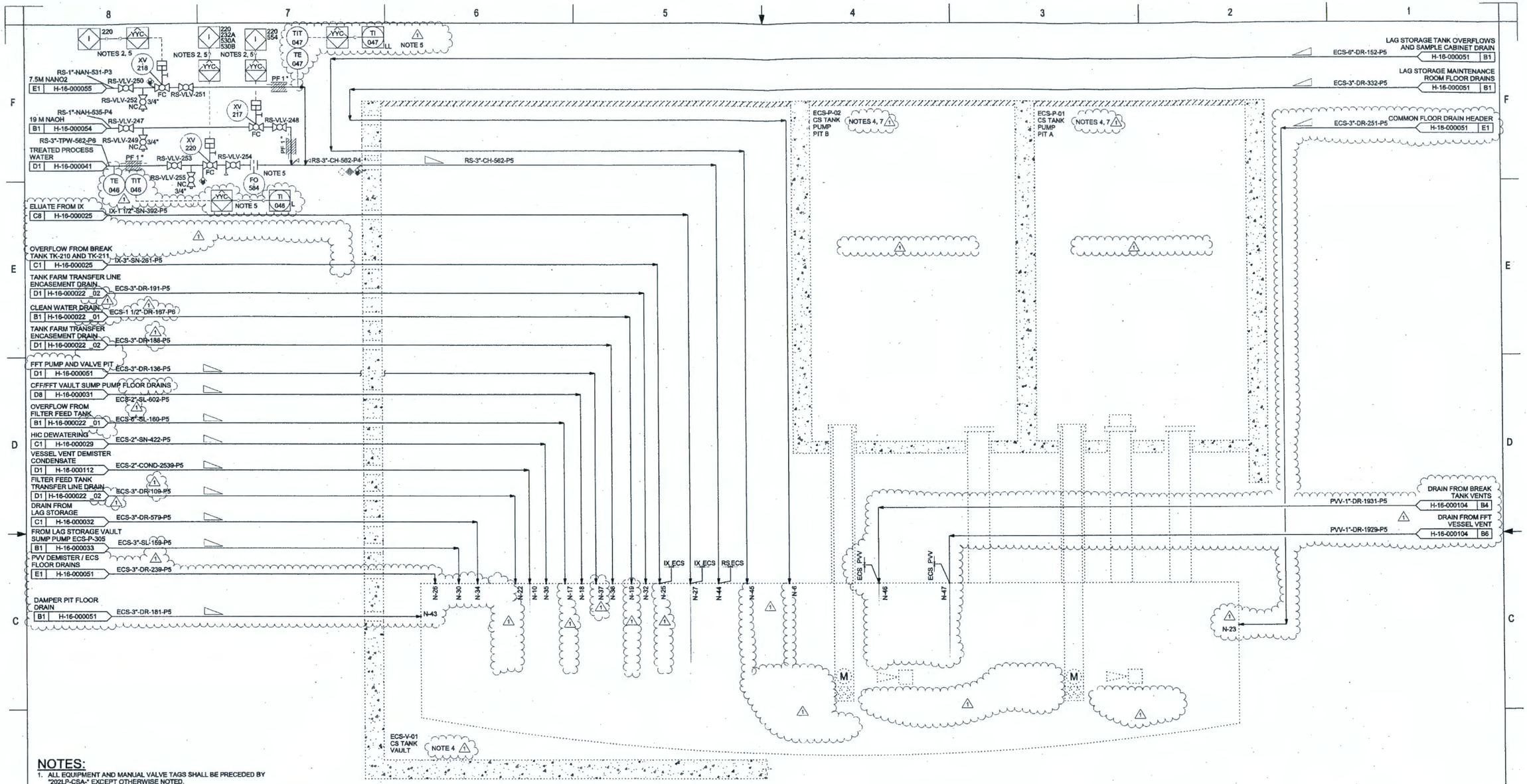

NOTES:

1. ALL EQUIPMENT AND MANUAL VALVE TAGS SHALL BE PRECEDED BY "202LP-CSA-" EXCEPT OTHERWISE NOTED.
2. FOR ON / OFF VALVE CONTROL DETAILS, REFER TO TO DETAIL 1A ON P&ID H-16-000003, SHEET 02.
3. REFER TO DRAWING H-16-000051 FOR PIT FLOOR DRAINS.
4. VAULT IS LINED WITH STAINLESS STEEL ON THE FLOOR AND SEALANT ABOVE LINER. PIT FLOORS AND WALLS ARE EPOXY COATED.
5. INSTRUMENT TAGS ARE PRECEDED BY "202LP-CSA-RS-".
6. H-16-000027 SHEET 1 SHOWS THE CS PRODUCT TANK MAJOR EQUIPMENT AND SOME INLETS/OUTLETS. H-16-000027 SHEET 2 SHOWS REMAINING INLETS TO CS PRODUCT TANK. H-16-000027 SHEET 3 SHOWS IX INSTRUMENTS AND EQUIPMENT LOCATED WITHIN ECS PITS.
7. SEE H-16-000027 SHEET 01 AND 03 FOR ADDITIONAL EQUIPMENT AND TANK DETAILS.

MARK G. WOODMANSEE, STATE OF WASHINGTON, 51519, REGISTERED PROFESSIONAL ENGINEER
5-16-17
For Permitting

ISSUED FOR 90% DESIGN NOT FOR CONSTRUCTION

REVISIONS						
1	RE-APPROVED FOR DESIGN	DM	RW	MW	WW	05/15/17
0	ISSUED FOR DESIGN	DM	JB	MW	BC	09/19/16
REV	DESCRIPTION	ORIG	CHK	APVD	IDV	DATE

REVISION APPROVAL RECORD — REV 1

DISCIPLINE	BY	DATE	DISCIPLINE	BY	DATE
ARCH.	N/A		MECHANICAL	DS	05/15/17
BUILDING SERVICES	WL	05/15/17	PIPING	MJ	05/15/17
CIVIL	N/A		PROCESS	MW	05/15/17
ELECTRICAL	LC	05/15/17	QA / QC	PB	05/15/17
ENVIRON.	N/A		STRUCTURAL	N/A	
GEN. ARRANG.	N/A		FP	KB	05/15/17
I & C	HF	05/15/17			

DRAWING STATUS

ISSUED	REV	DATE	SDE	PEM
PRELIMINARY				
RE-APPROVED FOR DESIGN	1	05/15/17	MW	MS

For DP

NOT APPROVED FOR CONSTRUCTION UNLESS SIGNED AND DATED. DESTROY ALL PRINTS BEARING EARLIER DATE AND/OR REV.NO.

AECOM
URS ENERGY & CONSTRUCTION Inc. - an AECOM Company
ATKINS
AREVA

AECOM PROJECT NO.: 31269

DWG NUMBER	TITLE

DRAWING TRACEABILITY LIST

REF NUMBER	TITLE

REFERENCES

NEXT USED ON H-16-000001

BUPS NO. 202LP

TASK NO. 7004

CAUTION
NOT COMPLETE WITHOUT CURRENT CHANGE DOCUMENTS FROM DATABASE

ATTENTION
DESTROY THIS DOCUMENT BY SHREDDING
MAY CONTAIN SENSITIVE INFORMATION

NAME	DATE	COMPANY
DRAWN BY		
CHECKED APPROVAL		
ENGINEERING		
ENGINEER		

U.S. DEPARTMENT OF ENERGY
Office of River Protection

LAWPS
P&ID
CESIUM TANK VAULT AND PITS

SIZE F | DRAWING NUMBER H-16-000027 | SHEET 2 | REV 1

SCALE NONE

PLOTTED

DRAWING

H-16-000027-3

LAWPS P&ID CESIUM TANK VAULT AND PITS SHEET 1

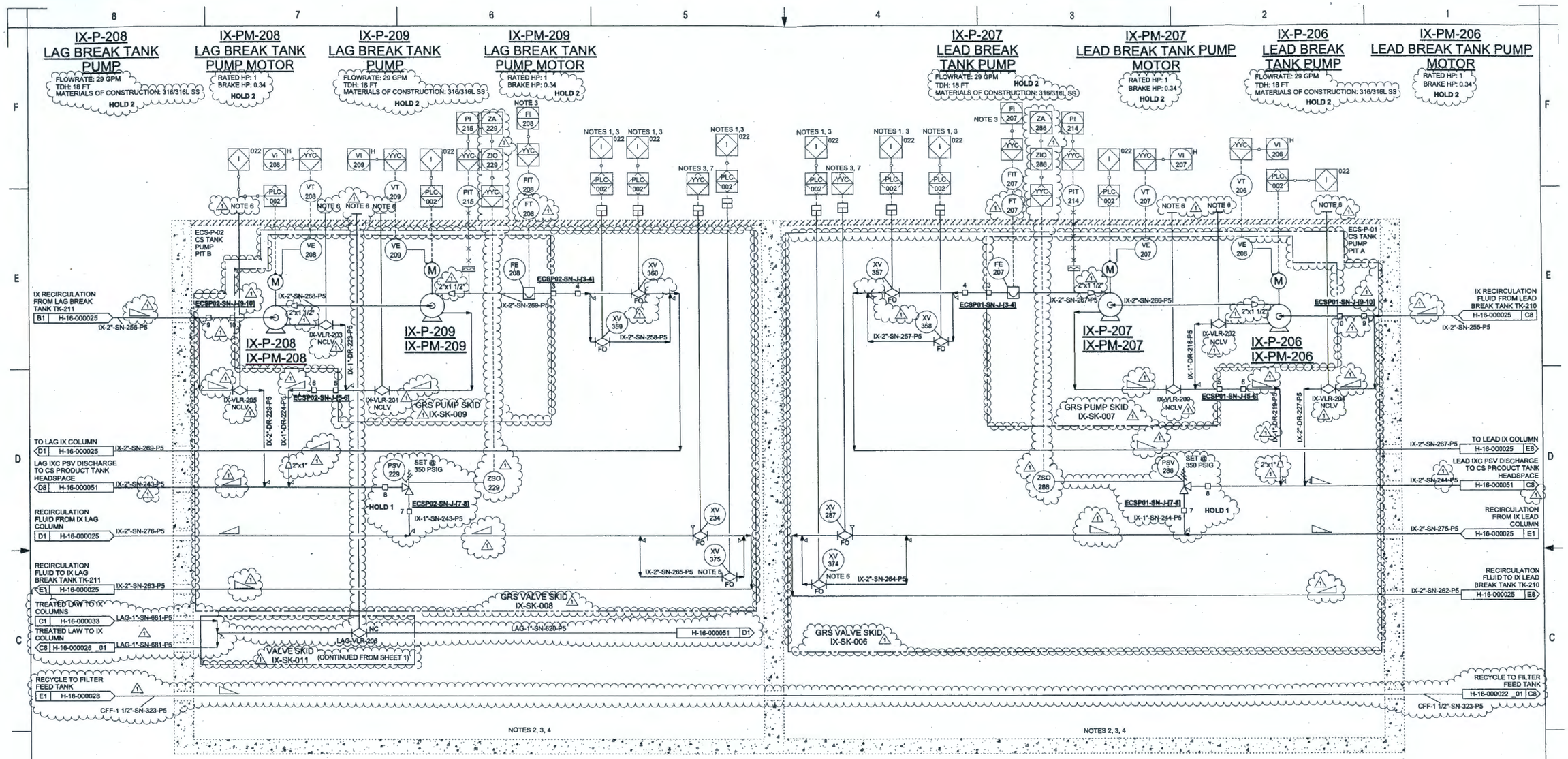

NOTES:

1. FOR IX RECIRCULATION ON / OFF VALVE CONTROL DETAILS, REFER TO DETAIL 1A ON P&ID H-16-000003, SHEET 02.
2. REFER TO DRAWING H-16-000051 FOR PIT FLOOR DRAINS.
3. ALL INSTRUMENT TAGS SHALL BE PRECEDED BY "202LP-CSA-IX".
4. PIT FLOOR AND WALLS ARE EPOXY LINED.
5. H-16-000027 SHEET 1 SHOWS THE CS PRODUCT TANK MAJOR EQUIPMENT AND SOME INLETS/OUTLETS H-16-000027 SHEET 2 SHOWS REMAINING INLETS TO CS PRODUCT TANK. H-16-000027 SHEET 3 SHOWS IX INSTRUMENTS AND EQUIPMENT LOCATED WITHIN ECS PITS.
6. ALL MANUAL VALVES HAVE SPINDLES EXTENDED THROUGH SHIELDING FOR OPERATION.
7. FOR ON / OFF VALVE CONTROL DETAILS, REFER TO DETAIL 1A ON P&ID H-16-000003, SHEET 02.
8. ALL EQUIPMENT AND MANUAL VALVE TAGS SHALL BE PRECEDED BY "202LP-CSA-".

HOLDS:

1. PSV SIZE INCLUDING INLET AND OUTLET LINE SIZE TO BE VERIFIED WITH PSV CALCULATION.
2. FINAL PUMP SIZE IS DEPENDENT ON THE ION EXCHANGE COLUMN INTERNAL DESIGN WHICH WILL BE BASED ON TESTING (REQUIRED TO DETERMINE SYSTEM PRESSURE DROP). REQUIRED FLOWRATE TO REMOVE FLAMMABLE GASSES IS TO BE DETERMINED BY TESTING. ONCE TESTING IS COMPLETE, PUMP SIZING CALCULATION CAN BE FINALIZED AND PUMP SELECTED BASED ON VENDOR DESIGN.

REVISION APPROVAL RECORD					REV 1
DISCIPLINE	BY	DATE	DISCIPLINE	BY	DATE
ARCH.	N/A		MECHANICAL	DS	05/15/17
BUILDING SERVICES	WL	05/15/17	PIPING	MJ	05/15/17
CIVIL	N/A		PROCESS	MW	05/15/17
ELECTRICAL	LC	05/15/17	QA / QC	PB	05/15/17
ENVIRON.	N/A		STRUCTURAL	N/A	
GEN. ARRANG.	N/A		FP	KB	05/15/17
I & C	HF	05/15/17			

DRAWING STATUS				
ISSUED	REV	DATE	SDE	PEM
PRELIMINARY				
RE-APPROVED FOR DESIGN	1	05/15/17	MW	MS

NOT APPROVED FOR CONSTRUCTION UNLESS SIGNED AND DATED. DESTROY ALL PRINTS BEARING EARLIER DATE AND/OR REV NO.

AECOM
URS ENERGY & CONSTRUCTION Inc. - an AECOM Company
ATKINS
AREVA

AECOM PROJECT NO.: 31259

DWG NUMBER	TITLE
DRAWING TRACEABILITY LIST	

REF NUMBER	TITLE
NEXT USED ON H-16-000001	REFERENCES

ISSUED FOR 90% DESIGN
NOT FOR CONSTRUCTION

REV	DESCRIPTION	ORIG	CHK	APVD	IDV	DATE
1	RE-APPROVED FOR DESIGN INCORPORATES 31269-21-DCN-0001	DM	RW	MW	WW	05/15/17
0	ISSUED FOR DESIGN	DM	JB	MW	BC	09/19/16

REVISIONS

BLDG NO. 202LP

WORK NO. 7004

CAUTION
NOT COMPLETE WITHOUT CURRENT CHANGE DOCUMENTS FROM DATABASE

ATTENTION
DESTROY THIS DOCUMENT BY SHREDDING MAY CONTAIN SENSITIVE INFORMATION

NAME	DATE	COMPANY
DRAWN BY		
DESIGN APPROVAL		
DESIGN OK BY		

U.S. DEPARTMENT OF ENERGY
Office of River Protection

LAWPS
P&ID
CESIUM TANK VAULT AND PITS

SIZE F | DRAWING NUMBER H-16-000027 | SHEET 3 | REV 1

SCALE NONE

PLOTID

WILLIAM S. WOODBURY JR. 31510 REGISTERED PROFESSIONAL ENGINEER
5-16-17
For Permitting

DRAWING

H-16-000028

LAWPS P&ID IX TREATED WASTE DELAY TANK PITS

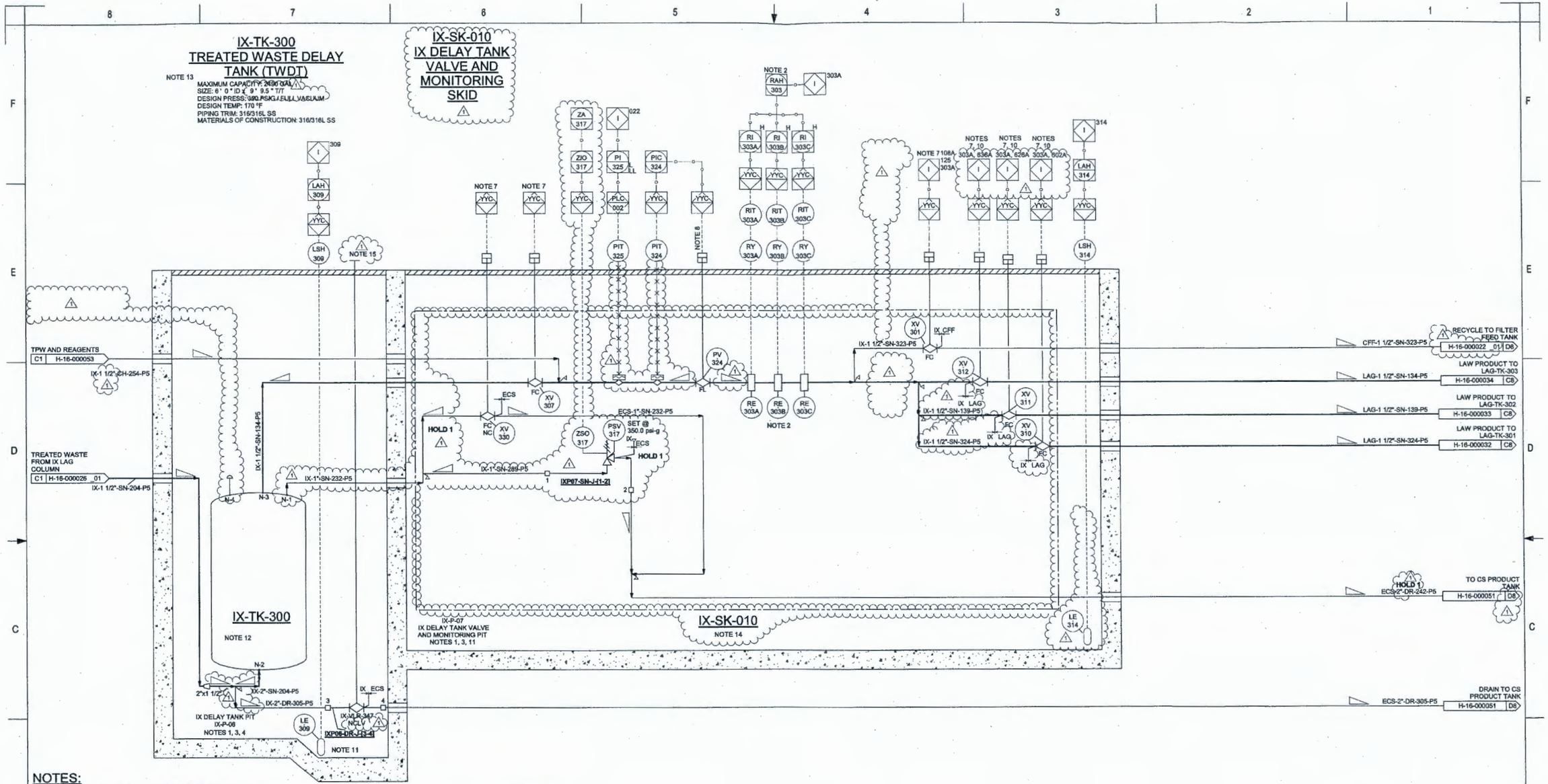

NOTES:

1. IX DELAY TANK PIT SHALL HAVE STAINLESS STEEL FLOOR LINER AND WALL SEALANT ABOVE LINER. IX DELAY TANK VALVE AND MONITORING PIT SHALL HAVE EPOXY COATING ON FLOOR AND WALLS.
2. RI 303A, 303B, AND 303C ARE GAMMA MONITORS. LOGIC IS 2 OF 3 VOTING.
3. ALL VAULTS AND VALVE PITS SHALL BE PROVIDED WITH REMOVABLE PLUGS FOR CAMERA ACCESS AND RADIATION MONITORING. REMOVABLE PLUGS ARE ALSO PROVIDED FOR MANUAL WASHING OF VAULT/PIT. NUMBER AND LOCATION TO BE DEFINED ON VAULT PIT DRAWINGS.
4. ALL EQUIPMENT AND MANUAL VALVE TAGS SHALL BE PRECEDED BY "202LP-IXA-" EXCEPT WHERE NOTED.
5. ALL INSTRUMENT TAGS SHALL BE PRECEDED BY "202LP-IXA-IX-" UNLESS OTHERWISE NOTED.
6. ALL HIGH POINT VENTS AND LOW POINT DRAINS TO BE DETERMINED WITH DESIGN DEVELOPMENT.
7. FOR ON/OFF VALVE CONTROLS DETAILS, REFER TO DETAIL 1A ON P&ID H-16-000003, SHEET 02.
8. FOR MODULATING VALVE CONTROL DETAILS, REFER TO DETAIL 1C ON P&ID H-16-000003, SHEET 02.
9. DELETED.
10. INSTRUMENT TAGS SHALL BE PRECEDED BY "202LP-IXA-LAG-".
11. REFER TO DRAWING H-16-000051 FOR PIT FLOOR DRAINS.
12. IX-TK-300 VESSEL INTERNALS WILL INCLUDE BAFFLES TO ESTABLISH PLUG FLOW IN THE UPWARD DIRECTION (ENSURE THE REQUIRED RESIDENCE TIME FOR BA-137 DECAY).
13. THE CAPACITY LISTED IS THE FULL CAPACITY OF THE TANK.
14. ACTUATORS ASSOCIATED WITH THE VALVE SKID ARE PART OF THE VENDOR SCOPE.
15. ALL MANUAL VALVES TO HAVE SPINDLES EXTENDING THROUGH THE SHIELDING FOR OPERATION.

HOLDS:

1. PSV SIZE INCLUDING INLET AND OUTLET LINE SIZE TO BE VERIFIED WITH PSV CALCULATION.

5-16-17
For Permitting

ISSUED FOR 90% DESIGN
NOT FOR CONSTRUCTION

REVISION APPROVAL RECORD					REV 1	
DISCIPLINE	BY	DATE	DISCIPLINE	BY	DATE
ARCH.	N/A		MECHANICAL	DS	05/15/17
BUILDING SERVICES	WL	05/15/17	PIPING	MJ	05/15/17
CIVIL	N/A		PROCESS	MW	05/15/17
ELECTRICAL	LC	05/15/17	QA / QC	PB	05/15/17
ENVIRON.	N/A		STRUCTURAL	N/A	
GEN. ARRANG.	N/A		FP	KB	05/15/17
I & C	HF	05/15/17			

DRAWING STATUS				
ISSUED	REV	DATE	SIDE	PEM
PRELIMINARY				
RE-APPROVED FOR DESIGN	1	05/15/17	MW	MS For DP

NOT APPROVED FOR CONSTRUCTION UNLESS SIGNED AND DATED. DESTROY ALL PRINTS BEARING EARLIER DATE AND/OR REV.NO.

AECOM
URS ENERGY & CONSTRUCTION Inc. - an AECOM Company
ATKINS
AREVA
AECOM PROJECT NO.: 31269

DRAWING TRACEABILITY LIST		REFERENCES	
DWG NUMBER	TITLE	REF NUMBER	TITLE
		NEXT USED ON	H-16-000001

REVISIONS						
1	RE-APPROVED FOR DESIGN INCORPORATES 31269-21-DCN-0001	RA	RW	MW	WW	05/15/17
0	APPROVED FOR DESIGN	RA	JB	MW	BC	09/19/16
REV	DESCRIPTION	ORIG	CHK	APVD	IDV	DATE

202LP

7004

CAUTION
NOT COMPLETE WITHOUT CURRENT CHANGE DOCUMENTS FROM DATABASE

ATTENTION
DESTROY THIS DOCUMENT BY SHREDDING
MAY CONTAIN SENSITIVE INFORMATION

NAME

U.S. DEPARTMENT OF ENERGY
Office of River Protection

LAWPS
P&ID
IX TREATED WASTE DELAY TANK PITS

F H-16-000028 1 1

SCALE NONE

DRAWING

H-16-000029

LAWPS P&ID IX RESIN SLUICING & DEWATERING

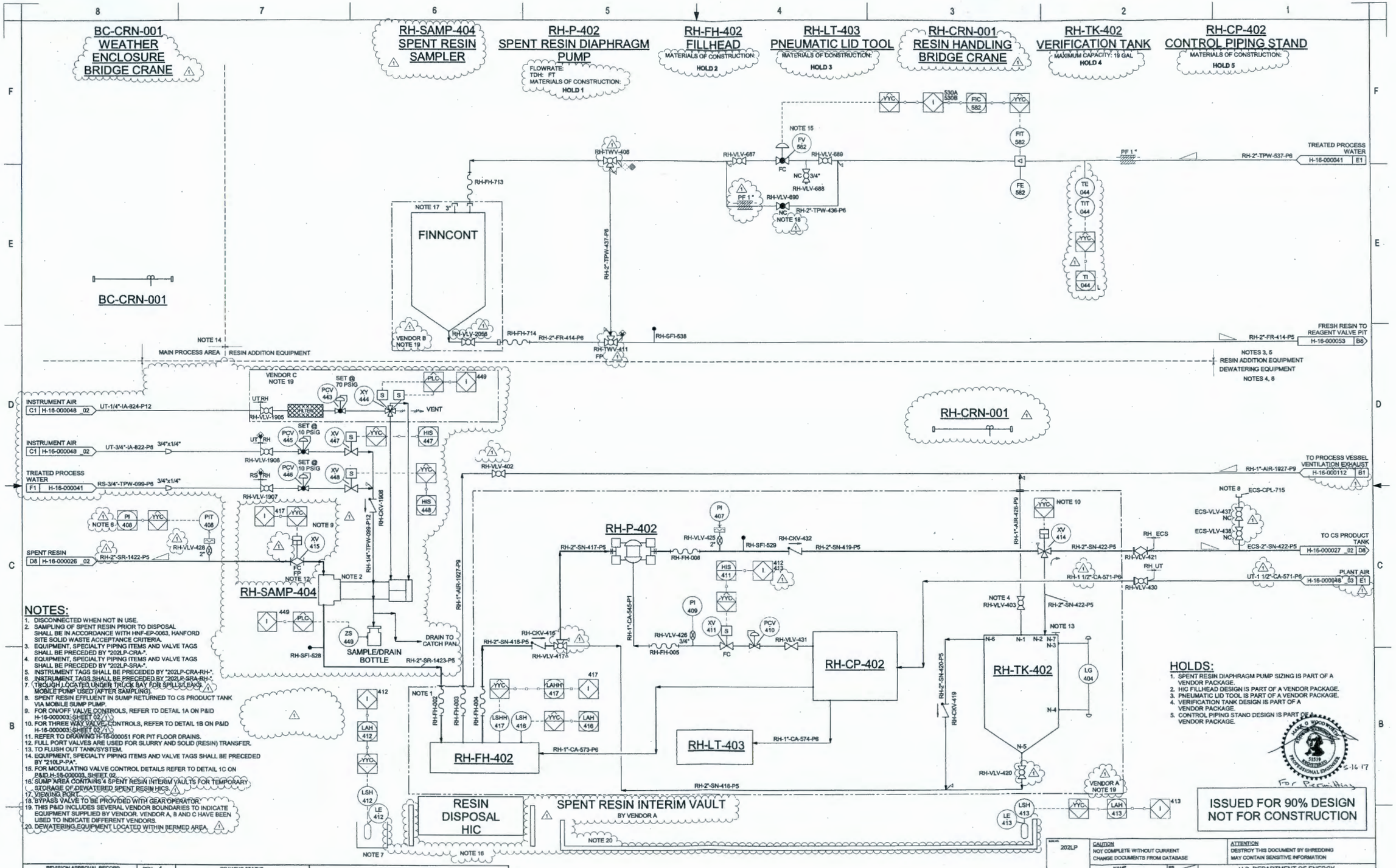

NOTES:

1. DISCONNECTED WHEN NOT IN USE.
2. SAMPLING OF SPENT RESIN PRIOR TO DISPOSAL SHALL BE IN ACCORDANCE WITH HNF-EP-0063, HANFORD SITE SOLID WASTE ACCEPTANCE CRITERIA.
3. EQUIPMENT, SPECIALTY PIPING ITEMS AND VALVE TAGS SHALL BE PRECEDED BY "202LP-CRA-".
4. EQUIPMENT, SPECIALTY PIPING ITEMS AND VALVE TAGS SHALL BE PRECEDED BY "202LP-SRA-".
5. INSTRUMENT TAGS SHALL BE PRECEDED BY "202LP-CRA-RH-".
6. INSTRUMENT TAGS SHALL BE PRECEDED BY "202LP-SRA-RH-".
7. TROUGH LOCATED UNDER TRUCK BAY FOR SPILLS/LEAKS MOBILE PUMP USED (AFTER SAMPLING).
8. SPENT RESIN EFFLUENT IN SUMP RETURNED TO CS PRODUCT TANK VIA MOBILE SUMP PUMP.
9. FOR ON/OFF VALVE CONTROLS, REFER TO DETAIL 1A ON P&ID H-16-000003, SHEET 02.
10. FOR THREE WAY VALVE CONTROLS, REFER TO DETAIL 1B ON P&ID H-16-000003, SHEET 02.
11. REFER TO DRAWING H-16-000051 FOR PIT FLOOR DRAINS.
12. FULL PORT VALVES ARE USED FOR SLURRY AND SOLID (RESIN) TRANSFER.
13. TO FLUSH OUT TANK/SYSTEM.
14. EQUIPMENT, SPECIALTY PIPING ITEMS AND VALVE TAGS SHALL BE PRECEDED BY "210LP-PA".
15. FOR MODULATING VALVE CONTROL DETAILS REFER TO DETAIL 1C ON P&ID H-16-000003, SHEET 02.
16. SUMP AREA CONTAINS 4 SPENT RESIN INTERIM VAULTS FOR TEMPORARY STORAGE OF DEWATERED SPENT RESIN HICS.
17. VIEWING PORT.
18. BYPASS VALVE TO BE PROVIDED WITH GEAR OPERATOR.
19. THIS P&ID INCLUDES SEVERAL VENDOR BOUNDARIES TO INDICATE EQUIPMENT SUPPLIED BY VENDOR. VENDOR A, B AND C HAVE BEEN USED TO INDICATE DIFFERENT VENDORS.
20. DEWATERING EQUIPMENT LOCATED WITHIN BERMED AREA.

HOLDS:

1. SPENT RESIN DIAPHRAGM PUMP SIZING IS PART OF A VENDOR PACKAGE.
2. HIC FILLHEAD DESIGN IS PART OF A VENDOR PACKAGE.
3. PNEUMATIC LID TOOL IS PART OF A VENDOR PACKAGE.
4. VERIFICATION TANK DESIGN IS PART OF A VENDOR PACKAGE.
5. CONTROL PIPING STAND DESIGN IS PART OF A VENDOR PACKAGE.

5-16-17

For Permitting

ISSUED FOR 90% DESIGN NOT FOR CONSTRUCTION

REVISION APPROVAL RECORD				REV 1	
DISCIPLINE	BY	DATE	DISCIPLINE	BY	DATE
ARCH.	N/A		MECHANICAL	DS	05/15/17
BUILDING SERVICES	WL	05/15/17	PIPING	MJ	05/15/17
CIVIL	N/A		PROCESS	MW	05/15/17
ELECTRICAL	LC	05/15/17	QA / QC	PBL	05/15/17
ENVIRON.	N/A		STRUCTURAL	N/A	
GEN. ARRANG.	N/A		FP	KB	05/15/17
I & C	HF	05/15/17			

DRAWING STATUS				
ISSUED	REV	DATE	SDE	PEM
PRELIMINARY				
RE-APPROVED FOR DESIGN	1	05/15/17	MW	MS For DP

NOT APPROVED FOR CONSTRUCTION UNLESS SIGNED AND DATED. DESTROY ALL PRINTS BEARING EARLIER DATE AND/OR REV.NO.

AECOM
URS ENERGY & CONSTRUCTION Inc. - an AECOM Company
ATKINS
AREVA

AECOM PROJECT NO.: 31269

DWG NUMBER	TITLE
DRAWING TRACEABILITY LIST	

REF NUMBER	TITLE
REFERENCES	
NEXT USED ON	H-16-000001

REV	DESCRIPTION	DRN	CHK	APVD	IDV	DATE
1	RE-APPROVED FOR DESIGN	DM	RW	MW	N/A	05/15/17
0	APPROVED FOR DESIGN	JM	JB	MW	N/A	09/19/16

REVISIONS

202LP

7004

CAUTION
NOT COMPLETE WITHOUT CURRENT CHANGE DOCUMENTS FROM DATABASE

ATTENTION
DESTROY THIS DOCUMENT BY SHREDDING MAY CONTAIN SENSITIVE INFORMATION

NAME

U.S. DEPARTMENT OF ENERGY
Office of River Protection

LAWPS
IX RESIN SLUICING, DEWATERING, AND CRANES

SIZE F | DRAWING NUMBER H-16-000029 | SHEET 1 | REV 1

SCALE NONE

PLOTTED

DRAWING

H-16-000031

LAWPS P&ID LAWPS SUMPS

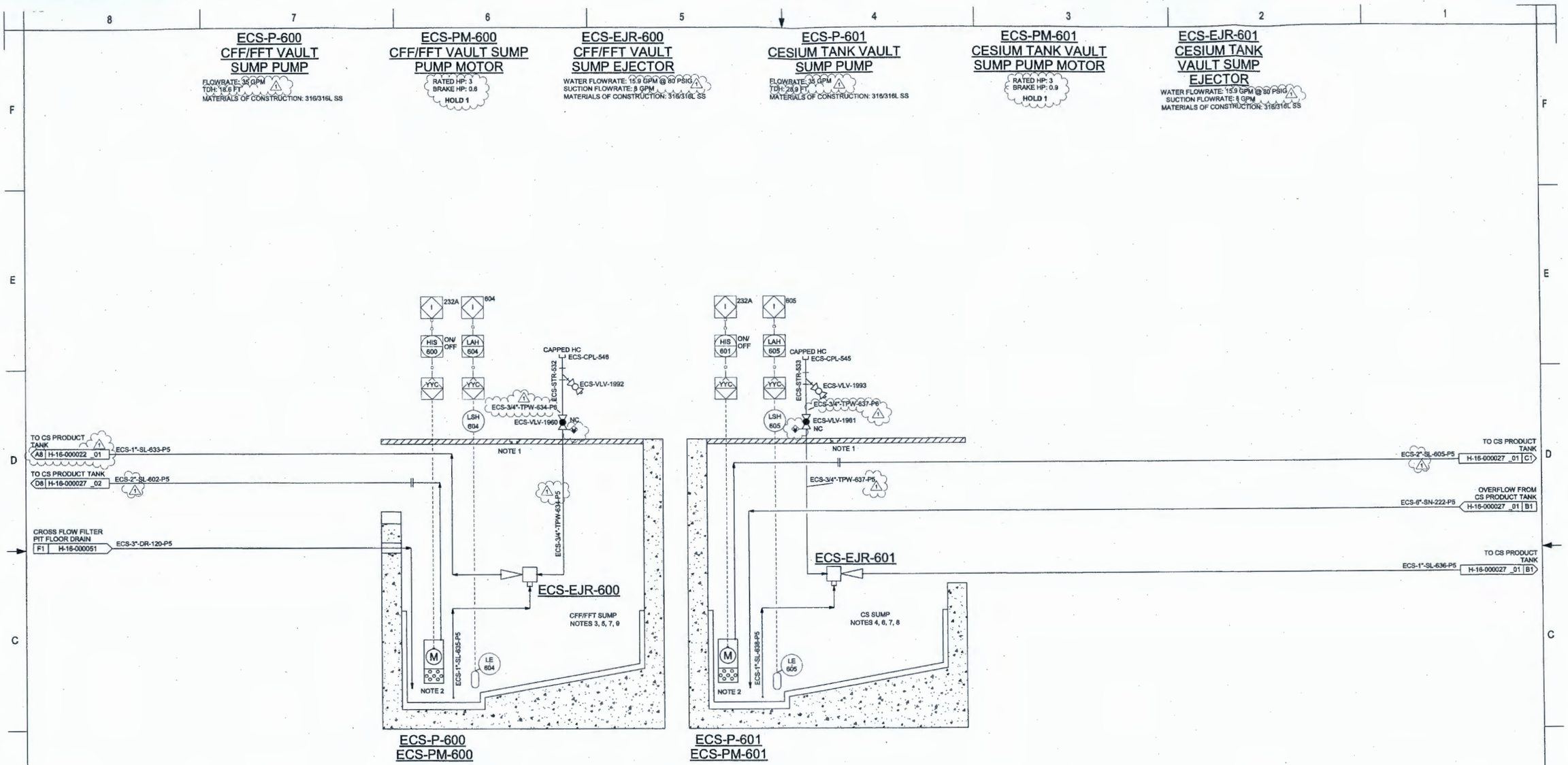

NOTES:

1. REMOVABLE PLUG FOR PIT, CAMERA ACCESS, WASHDOWNS, AND RADIATION MONITORING. NUMBER AND LOCATION TO BE DETERMINED.
2. PUMP INSTALLED UPON DETECTION OF LIQUID IN SUMP IF NEEDED TO MEET WAC REQUIREMENTS FOR ACCUMULATED LIQUID IN SECONDARY CONTAINMENT.
3. EQUIPMENT AND MANUAL VALVE TAGS SHALL BE PRECEDED BY "202LP-FFA-".
4. EQUIPMENT AND MANUAL VALVE TAGS SHALL BE PRECEDED BY "202LP-CSA-".
5. INSTRUMENT TAGS SHALL BE PRECEDED BY "202LP-FFA-ECS-".
6. INSTRUMENT TAGS SHALL BE PRECEDED BY "202LP-CSA-ECS-".
7. SUMP FLOORS ARE LINED WITH STAINLESS STEEL WITH WALL SEALANT ABOVE LINER.
8. CS SUMP PIT IS CONNECTED TO THE CS TANK VAULT (ECS-V-01).
9. CFF/FFT SUMP PIT IS CONNECTED TO THE FILTER FEED TANK VAULT (CFF-V-01).

HOLDS:

1. PUMP BRAKE HP AND RATED HP ON HOLD PENDING VENDOR INFORMATION

REVISION APPROVAL RECORD				REV 1	
DISCIPLINE	BY	DATE	DISCIPLINE	BY	DATE
ARCH.	N/A		MECHANICAL	DS	05/15/17
BUILDING SERVICES	WL	05/15/17	PIPING	MJ	05/15/17
CIVIL	N/A		PROCESS	MW	05/15/17
ELECTRICAL	LC	05/15/17	QA / QC	PSC	05/15/17
ENVIRON.	N/A		STRUCTURAL	N/A	
GEN. ARRANG.	N/A		FP	KB	05/15/17
I & C	HF	05/15/17			

DRAWING STATUS					
ISSUED	REV	DATE	SDE	PEM	
PRELIMINARY					
RE-APPROVED FOR DESIGN	1	05/15/17	MW	MS	For DP

NOT APPROVED FOR CONSTRUCTION UNLESS SIGNED AND DATED. DESTROY ALL PRINTS BEARING EARLIER DATE AND/OR REV.NO.

AECOM
URS ENERGY & CONSTRUCTION Inc. - an AECOM Company
ATKINS
AREVA

AECOM PROJECT NO.: 31269

DWG NUMBER	TITLE
DRAWING TRACEABILITY LIST	

REF NUMBER	TITLE
REFERENCES	

NEXT USED ON H-16-000001

ISSUED FOR 90% DESIGN
NOT FOR CONSTRUCTION

REV	DESCRIPTION	ORIG	CHK	APVD	IDV	DATE
1	RE-APPROVED FOR DESIGN	DM	RW	MW	N/A	05/15/17
0	APPROVED FOR DESIGN	DM	JB	MW	N/A	09/19/16

REVISIONS

PROJECT NO. 202LP
MODEL NO. 7004

CAUTION
NOT COMPLETE WITHOUT CURRENT CHANGE DOCUMENTS FROM DATABASE

ATTENTION
DESTROY THIS DOCUMENT BY SHREDDING
MAY CONTAIN SENSITIVE INFORMATION

NAME	DATE	COMPANY
DRAWN BY		
DRAFTING APPROVAL		
DISCIPLINE ENGINEER		
CHANGER		

U.S. DEPARTMENT OF ENERGY
Office of River Protection

LAWPS
P&ID
LAWPS SUMPS

SIZE F | DRAWING NUMBER H-16-000031 | SHEET 1 | REV 1

SCALE NONE

PLOTTED

5-16-17
For Permitting

DRAWING

H-16-000032

LAWPS P&ID LAG-TK-301 LAG STORAGE TANK

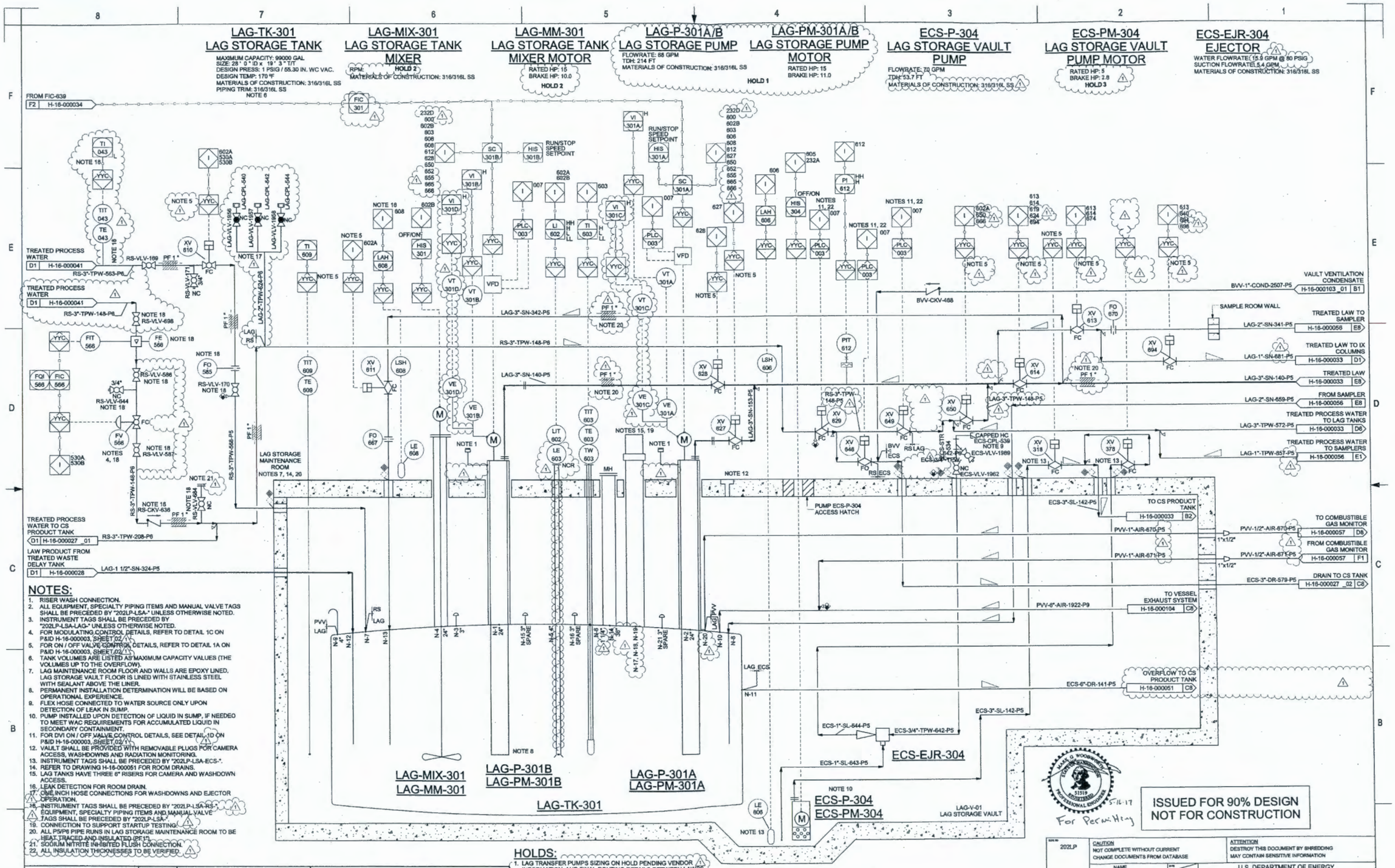

NOTES:

1. RISER WASH CONNECTION.
2. ALL EQUIPMENT, SPECIALTY PIPING ITEMS AND MANUAL VALVE TAGS SHALL BE PRECEDED BY "202LP-LSA-" UNLESS OTHERWISE NOTED.
3. INSTRUMENT TAGS SHALL BE PRECEDED BY "202LP-LSA-LAG-" UNLESS OTHERWISE NOTED.
4. FOR MODULATING CONTROL DETAILS, REFER TO DETAIL 1C ON P&ID H-16-000003, SHEET 02.
5. FOR ON / OFF VALVE CONTROL DETAILS, REFER TO DETAIL 1A ON P&ID H-16-000003, SHEET 02.
6. TANK VOLUMES ARE LISTED AS MAXIMUM CAPACITY VALUES (THE VOLUMES UP TO THE OVERFLOW).
7. LAG MAINTENANCE ROOM FLOOR AND WALLS ARE EPOXY LINED. LAG STORAGE VAULT FLOOR IS LINED WITH STAINLESS STEEL WITH SEALANT ABOVE THE LINER.
8. PERMANENT INSTALLATION DETERMINATION WILL BE BASED ON OPERATIONAL EXPERIENCE.
9. FLEX HOSE CONNECTED TO WATER SOURCE ONLY UPON DETECTION OF LEAK IN SUMP.
10. PUMP INSTALLED UPON DETECTION OF LIQUID IN SUMP, IF NEEDED TO MEET WAC REQUIREMENTS FOR ACCUMULATED LIQUID IN SECONDARY CONTAINMENT.
11. FOR DVI ON / OFF VALVE CONTROL DETAILS, SEE DETAIL 1D ON P&ID H-16-000003, SHEET 02.
12. VAULT SHALL BE PROVIDED WITH REMOVABLE PLUGS FOR CAMERA ACCESS, WASHDOWNS AND RADIATION MONITORING.
13. INSTRUMENT TAGS SHALL BE PRECEDED BY "202LP-LSA-ECS-".
14. REFER TO DRAWING H-16-000051 FOR ROOM DRAINS.
15. LAG TANKS HAVE THREE 6" RISERS FOR CAMERA AND WASHDOWN ACCESS.
16. LEAK DETECTION FOR ROOM DRAIN.
17. ONE INCH HOSE CONNECTIONS FOR WASHDOWNS AND EJECTOR OPERATION.
18. INSTRUMENT TAGS SHALL BE PRECEDED BY "202LP-LSA-RS-". EQUIPMENT, SPECIALTY PIPING ITEMS AND MANUAL VALVE TAGS SHALL BE PRECEDED BY "202LP-LSA-".
19. CONNECTION TO SUPPORT STARTUP TESTING.
20. ALL P5/P6 PIPE RUNS IN LAG STORAGE MAINTENANCE ROOM TO BE HEAT TRACED AND INSULATED (PF1*).
21. SODIUM NITRITE INHIBITED FLUSH CONNECTION.
22. ALL INSULATION THICKNESSES TO BE VERIFIED.

HOLDS:

1. LAG TRANSFER PUMPS SIZING ON HOLD PENDING VENDOR INFORMATION AND FINAL ROUTING DETAILS BETWEEN LAWPS AND WTP.
2. AGITATOR DETAILS TO BE VERIFIED BY VENDOR.
3. PUMP BRAKE HP AND RATED HP ON HOLD PENDING VENDOR INFORMATION.

REVISION APPROVAL RECORD				REV 1	
DISCIPLINE	BY	DATE	DISCIPLINE	BY	DATE
ARCH.	N/A		MECHANICAL	DS	05/15/17
BUILDING SERVICES	WL	05/15/17	PIPING	MJ	05/15/17
CIVIL	N/A		PROCESS	MW	05/15/17
ELECTRICAL	LC	05/15/17	QA / QC	PSF	05/15/17
ENVIRON.	N/A		STRUCTURAL	N/A	
GEN. ARRANG.	N/A		FP	KB	05/15/17
I & C	HF	05/15/17			

DRAWING STATUS				
ISSUED	REV	DATE	SIDE	PEM
PRELIMINARY				
RE-APPROVED FOR DESIGN	1	05/15/17	MW	MS

NOT APPROVED FOR CONSTRUCTION UNLESS SIGNED AND DATED. DESTROY ALL PRINTS BEARING EARLIER DATE AND/OR REV NO.

AECOM
URS ENERGY & CONSTRUCTION Inc. - an AECOM Company
ATKINS
AREVA

AECOM PROJECT NO.: 31269

DWG NUMBER	TITLE
	DRAWING TRACEABILITY LIST

REF NUMBER	TITLE
	REFERENCES

NEXT USED ON H-16-000001

REV	DESCRIPTION	ORIG	CHK	APVD	IDV	DATE
1	RE-APPROVED FOR DESIGN INCORPORATES 31269-21-DCN-0001	DM	RW	MW	WW	05/15/17
0	ISSUED FOR DESIGN	DM	JB	MW	BC	09/19/16

REVISIONS

202LP

7004

CAUTION
NOT COMPLETE WITHOUT CURRENT CHANGE DOCUMENTS FROM DATABASE

ATTENTION
DESTROY THIS DOCUMENT BY SHREDDING
MAY CONTAIN SENSITIVE INFORMATION

NAME	DATE	COMPANY
DRAWN BY		
DESIGN APPROVAL		
CHECKED BY		
ENGINEER		

U.S. DEPARTMENT OF ENERGY
Office of River Protection

LAWPS
P&ID
LAG-TK-301 LAG STORAGE TANK

F H-16-000032 1 1

SCALE NONE

PLOTTED

DRAWING

H-16-000033

LAWPS P&ID LAG-TK-302 LAG STORAGE TANK

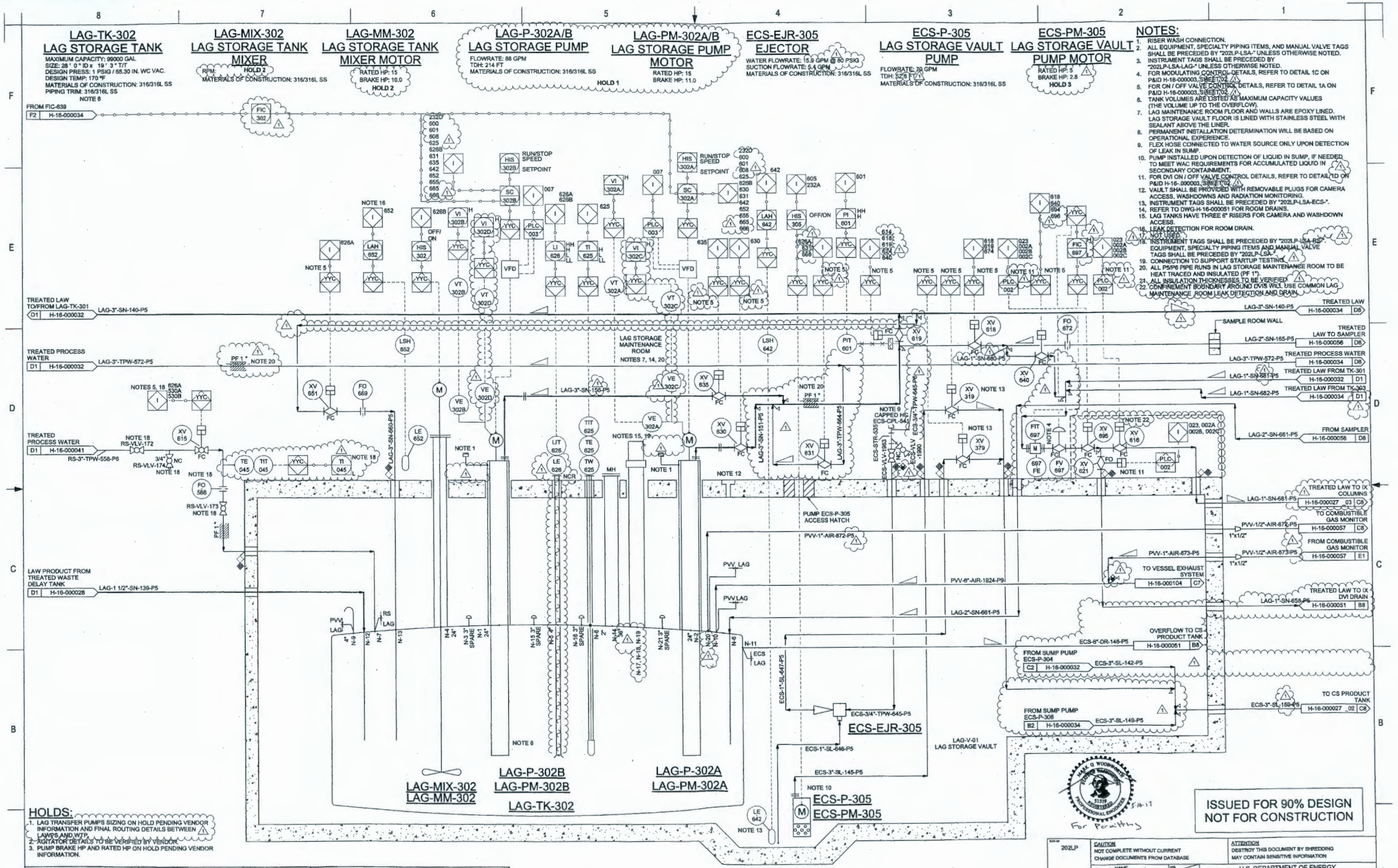

NOTES:

1. RISER WASH CONNECTION.
2. ALL EQUIPMENT, SPECIALTY PIPING ITEMS, AND MANUAL VALVE TAGS SHALL BE PRECEDED BY "202LP-LSA-" UNLESS OTHERWISE NOTED.
3. INSTRUMENT TAGS SHALL BE PRECEDED BY "202LP-LSA-LAG-" UNLESS OTHERWISE NOTED.
4. FOR MODULATING CONTROL DETAILS, REFERE TO DETAIL 1C ON P&ID H-16-000003, SHEET 02.
5. FOR ON / OFF VALVE CONTROL DETAILS, REFER TO DETAIL 1A ON P&ID H-16-000003, SHEET 02.
6. TANK VOLUMES ARE LISTED AS MAXIMUM CAPACITY VALUES (THE VOLUME UP TO THE OVERFLOW).
7. LAG MAINTENANCE ROOM FLOOR AND WALLS ARE EPOXY LINED. LAG STORAGE VAULT FLOOR IS LINED WITH STAINLESS STEEL WITH SEALANT ABOVE THE LINER.
8. PERMANENT INSTALLATION DETERMINATION WILL BE BASED ON OPERATIONAL EXPERIENCE.
9. FLEX HOSE CONNECTED TO WATER SOURCE ONLY UPON DETECTION OF LEAK IN SUMP.
10. PUMP INSTALLED UPON DETECTION OF LIQUID IN SUMP, IF NEEDED TO MEET WAC REQUIREMENTS FOR ACCUMULATED LIQUID IN SECONDARY CONTAINMENT.
11. FOR DVI ON / OFF VALVE CONTROL DETAILS, REFER TO DETAIL 1D ON P&ID H-16-000003, SHEET 02.
12. VAULT SHALL BE PROVIDED WITH REMOVABLE PLUGS FOR CAMERA ACCESS, WASHDOWNS AND RADIATION MONITORING.
13. INSTRUMENT TAGS SHALL BE PRECEDED BY "202LP-LSA-ECS-".
14. REFER TO DWG-H-16-000051 FOR ROOM DRAINS.
15. LAG TANKS HAVE THREE 6" RISERS FOR CAMERA AND WASHDOWN ACCESS.
16. LEAK DETECTION FOR ROOM DRAIN.
17. NOT USED.
18. INSTRUMENT TAGS SHALL BE PRECEDED BY "202LP-LSA-RS-". EQUIPMENT, SPECIALTY PIPING ITEMS AND MANUAL VALVE TAGS SHALL BE PRECEDED BY "202LP-LSA-".
19. CONNECTION TO SUPPORT STARTUP TESTING.
20. ALL P5/P6 PIPE RUNS IN LAG STORAGE MAINTENANCE ROOM TO BE HEAT TRACED AND INSULATED (PF 1").
21. ALL INSULATION THICKNESSES TO BE VERIFIED.
22. CONFINEMENT BOUNDARY AROUND DVIS WILL USE COMMON LAG MAINTENANCE ROOM LEAK DETECTION AND DRAIN.

HOLDS:

1. LAG TRANSFER PUMPS SIZING ON HOLD PENDING VENDOR INFORMATION AND FINAL ROUTING DETAILS BETWEEN LAWPS AND WTP.
2. AGITATOR DETAILS TO BE VERIFIED BY VENDOR.
3. PUMP BRAKE HP AND RATED HP ON HOLD PENDING VENDOR INFORMATION.

ISSUED FOR 90% DESIGN
NOT FOR CONSTRUCTION

REVISION APPROVAL RECORD					REV 1
DISCIPLINE	BY	DATE	DISCIPLINE	BY	DATE
ARCH.	N/A		MECHANICAL	DS	05/15/17
BUILDING SERVICES	WL	05/15/17	PIPING	MJ	05/15/17
CIVIL	N/A		PROCESS	MW	05/15/17
ELECTRICAL	LC	05/15/17	QA / QC	FBC	05/15/17
ENVIRON.	N/A		STRUCTURAL	N/A	
GEN. ARRANG.	N/A		FP	KB	05/15/17
I & C	HF	05/15/17			

DRAWING STATUS				
ISSUED	REV	DATE	SDE	PEM
PRELIMINARY				
RE-APPROVED FOR DESIGN	1	05/15/17	MW	MS For DP

NOT APPROVED FOR CONSTRUCTION UNLESS SIGNED AND DATED. DESTROY ALL PRINTS BEARING EARLIER DATE AND/OR REV NO.

AECOM
URS ENERGY & CONSTRUCTION Inc. - an AECOM Company
ATKINS
AREVA

AECOM PROJECT NO.: 31269

DWG NUMBER | TITLE | DRAWING TRACEABILITY LIST | REF NUMBER | TITLE | REFERENCES | NEXT USED ON H-16-000001

REV	DESCRIPTION	ORIG	CHK	APVD	IDV	DATE
1	RE-APPROVED FOR DESIGN INCORPORATES S1269-21-DCN-0001	DM	RW	MW	WW	05/15/17
0	ISSUED FOR DESIGN	DM	JB	MW	BC	09/19/16

REVISIONS

202LP
7004

CAUTION
NOT COMPLETE WITHOUT CURRENT CHANGE DOCUMENTS FROM DATABASE

ATTENTION
DESTROY THIS DOCUMENT BY SHREDDING
MAY CONTAIN SENSITIVE INFORMATION

NAME	DATE
DRAWN	
DESIGN REVIEW	
PROJECT ENGINEER	
CHECKED	

U.S. DEPARTMENT OF ENERGY
Office of River Protection

LAWPS
P&ID
LAG-TK-302 LAG STORAGE TANK

F | H-16-000033 | 1 | 1

SCALE NONE

DRAWING

H-16-000034

LAWPS P&ID LAG-TK-303 LAG STORAGE TANK

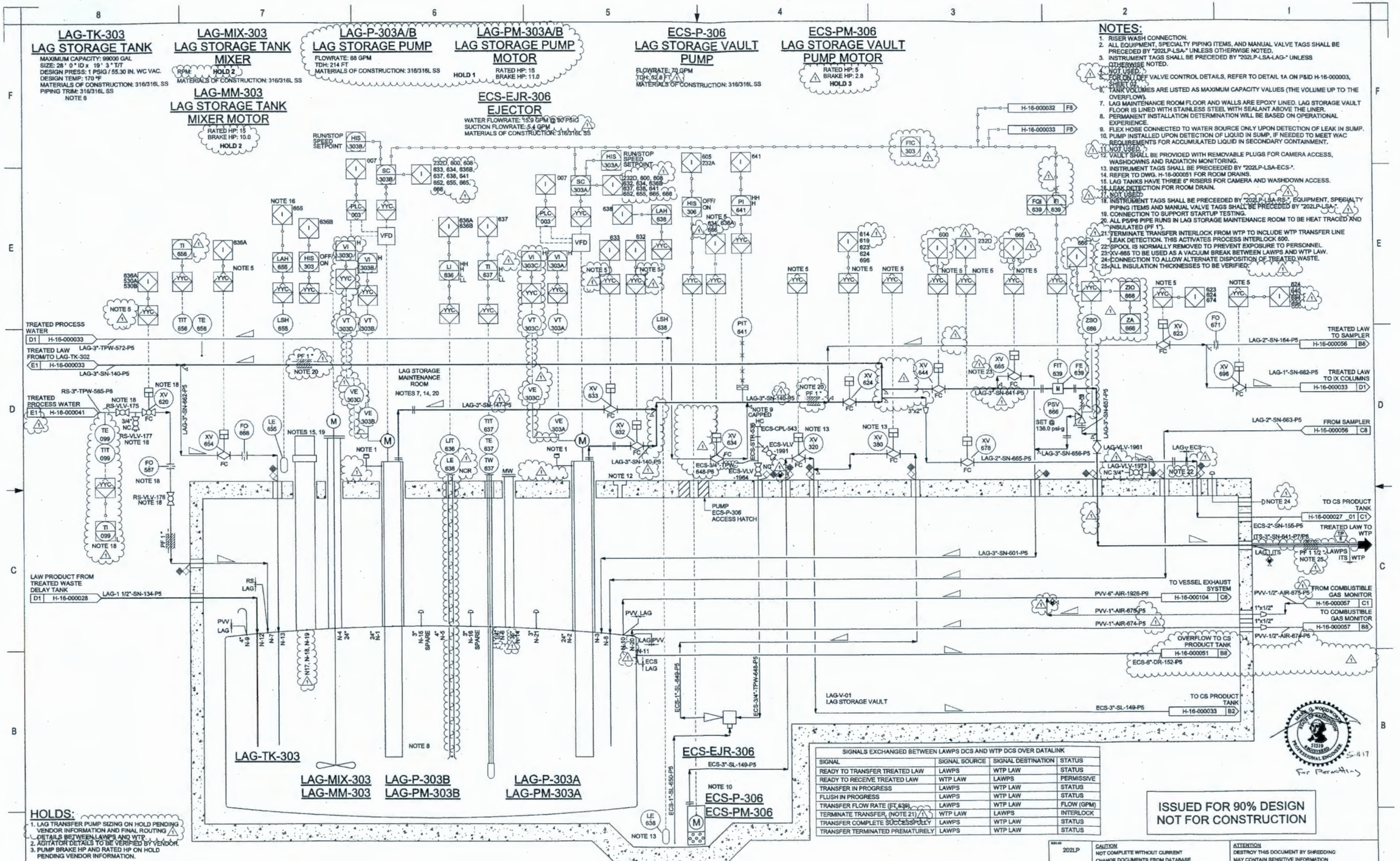

NOTES:

1. RISER WASH CONNECTION.
2. ALL EQUIPMENT, SPECIALTY PIPING ITEMS, AND MANUAL VALVE TAGS SHALL BE PRECEDED BY "202LP-LSA-" UNLESS OTHERWISE NOTED.
3. INSTRUMENT TAGS SHALL BE PRECEDED BY "202LP-LSA-LAG-" UNLESS OTHERWISE NOTED.
4. NOT USED.
5. FOR ON/OFF VALVE CONTROL DETAILS, REFER TO DETAIL 1A ON P&ID H-16-000003, SHEET 02.
6. TANK VOLUMES ARE LISTED AS MAXIMUM CAPACITY VALUES (THE VOLUME UP TO THE OVERFLOW).
7. LAG MAINTENANCE ROOM FLOOR AND WALLS ARE EPOXY LINED. LAG STORAGE VAULT FLOOR IS LINED WITH STAINLESS STEEL WITH SEALANT ABOVE THE LINER.
8. PERMANENT INSTALLATION DETERMINATION WILL BE BASED ON OPERATIONAL EXPERIENCE.
9. FLEX HOSE CONNECTED TO WATER SOURCE ONLY UPON DETECTION OF LEAK IN SUMP.
10. PUMP INSTALLED UPON DETECTION OF LIQUID IN SUMP, IF NEEDED TO MEET WAC REQUIREMENTS FOR ACCUMULATED LIQUID IN SECONDARY CONTAINMENT.
11. NOT USED.
12. VAULT SHALL BE PROVIDED WITH REMOVABLE PLUGS FOR CAMERA ACCESS, WASHDOWNS AND RADIATION MONITORING.
13. INSTRUMENT TAGS SHALL BE PRECEEDED BY "202LP-LSA-ECS-".
14. REFER TO DWG. H-16-000051 FOR ROOM DRAINS.
15. LAG TANKS HAVE THREE 6" RISERS FOR CAMERA AND WASHDOWN ACCESS.
16. LEAK DETECTION FOR ROOM DRAIN.
17. NOT USED.
18. INSTRUMENT TAGS SHALL BE PRECEEDED BY "202LP-LSA-RS-". EQUIPMENT, SPECIALTY PIPING ITEMS AND MANUAL VALVE TAGS SHALL BE PRECEDED BY "202LP-LSA-".
19. CONNECTION TO SUPPORT STARTUP TESTING.
20. ALL PS/P6 PIPE RUNS IN LAG STORAGE MAINTENANCE ROOM TO BE HEAT TRACED AND INSULATED (PF 1").
21. TERMINATE TRANSFER INTERLOCK FROM WTP TO INCLUDE WTP TRANSFER LINE LEAK DETECTION. THIS ACTIVATES PROCESS INTERLOCK 600.
22. SPOOL IS NORMALLY REMOVED TO PREVENT EXPOSURE TO PERSONNEL.
23. XV-665 TO BE USED AS A VACUUM BREAK BETWEEN LAWPS AND WTP LAW.
24. CONNECTION TO ALLOW ALTERNATE DISPOSITION OF TREATED WASTE.
25. ALL INSULATION THICKNESSES TO BE VERIFIED.

HOLDS:

1. LAG TRANSFER PUMP SIZING ON HOLD PENDING VENDOR INFORMATION AND FINAL ROUTING DETAILS BETWEEN LAWPS AND WTP.
2. AGITATOR DETAILS TO BE VERIFIED BY VENDOR.
3. PUMP BRAKE HP AND RATED HP ON HOLD PENDING VENDOR INFORMATION.

SIGNALS EXCHANGED BETWEEN LAWPS DCS AND WTP DCS OVER DATALINK

SIGNAL	SIGNAL SOURCE	SIGNAL DESTINATION	STATUS
READY TO TRANSFER TREATED LAW	LAWPS	WTP LAW	STATUS
READY TO RECEIVE TREATED LAW	WTP LAW	LAWPS	PERMISSIVE
TRANSFER IN PROGRESS	LAWPS	WTP LAW	STATUS
FLUSH IN PROGRESS	LAWPS	WTP LAW	STATUS
TRANSFER FLOW RATE (FT 639)	LAWPS	WTP LAW	FLOW (GPM)
TERMINATE TRANSFER (NOTE 21)	WTP LAW	LAWPS	INTERLOCK
TRANSFER COMPLETE SUCCESSFULLY	LAWPS	WTP LAW	STATUS
TRANSFER TERMINATED PREMATURELY	LAWPS	WTP LAW	STATUS

ISSUED FOR 90% DESIGN
NOT FOR CONSTRUCTION

REVISION APPROVAL RECORD				REV 1	
DISCIPLINE	BY	DATE	DISCIPLINE	BY	DATE
ARCH.	N/A		MECHANICAL	DS	05/15/17
BUILDING SERVICES	WL	05/15/17	PIPING	MJ	05/15/17
CIVIL	N/A		PROCESS	MW	05/15/17
ELECTRICAL	LC	05/15/17	QA / QC	PB	05/15/17
ENVIRON.	N/A		STRUCTURAL	N/A	
GEN. ARRANG.	N/A		FP	KB	05/15/17
I & C	HF	05/15/17			

DRAWING STATUS					
ISSUED	REV	DATE	SDE	PEM	
PRELIMINARY					
RE-APPROVED FOR DESIGN	1	05/15/17	MW	MS	For DP

NOT APPROVED FOR CONSTRUCTION UNLESS SIGNED AND DATED. DESTROY ALL PRINTS BEARING EARLIER DATE AND/OR REV.NO.

AECOM
URS ENERGY & CONSTRUCTION Inc. - an AECOM Company
ATKINS
AREVA
AECOM PROJECT NO.: 31289

DWG NUMBER	TITLE
DRAWING TRACEABILITY LIST	

REF NUMBER	TITLE
REFERENCES	
NEXT USED ON H-16-000001	

REV	DESCRIPTION	ORIG	CHK	APVD	IDV	DATE
1	RE-APPROVED FOR DESIGN INCORPORATES 31289-21-DCN-0001	DM	mw	MW	WW	05/15/17
0	ISSUED FOR DESIGN	DM	JB	MW	BC	09/19/16

REVISIONS

PROJ.NO 202LP
ORIG.NO 7004

CAUTION
NOT COMPLETE WITHOUT CURRENT CHANGE DOCUMENTS FROM DATABASE

ATTENTION
DESTROY THIS DOCUMENT BY SHREDDING MAY CONTAIN SENSITIVE INFORMATION

NAME / DATE / CHAPTER
DRAWN BY
PROJECT ENGINEER
PROCESS ENGINEER
ENGINEER

U.S. DEPARTMENT OF ENERGY
Office of River Protection

LAWPS
P&ID
LAG-TK-303 LAG STORAGE TANK

SIZE F | DRAWING NUMBER H-16-000034 | REV 1 | SHEET 1
SCALE NONE
PLOTTED

DRAWING

H-16-000051

LAWPS P&ID DRAINS

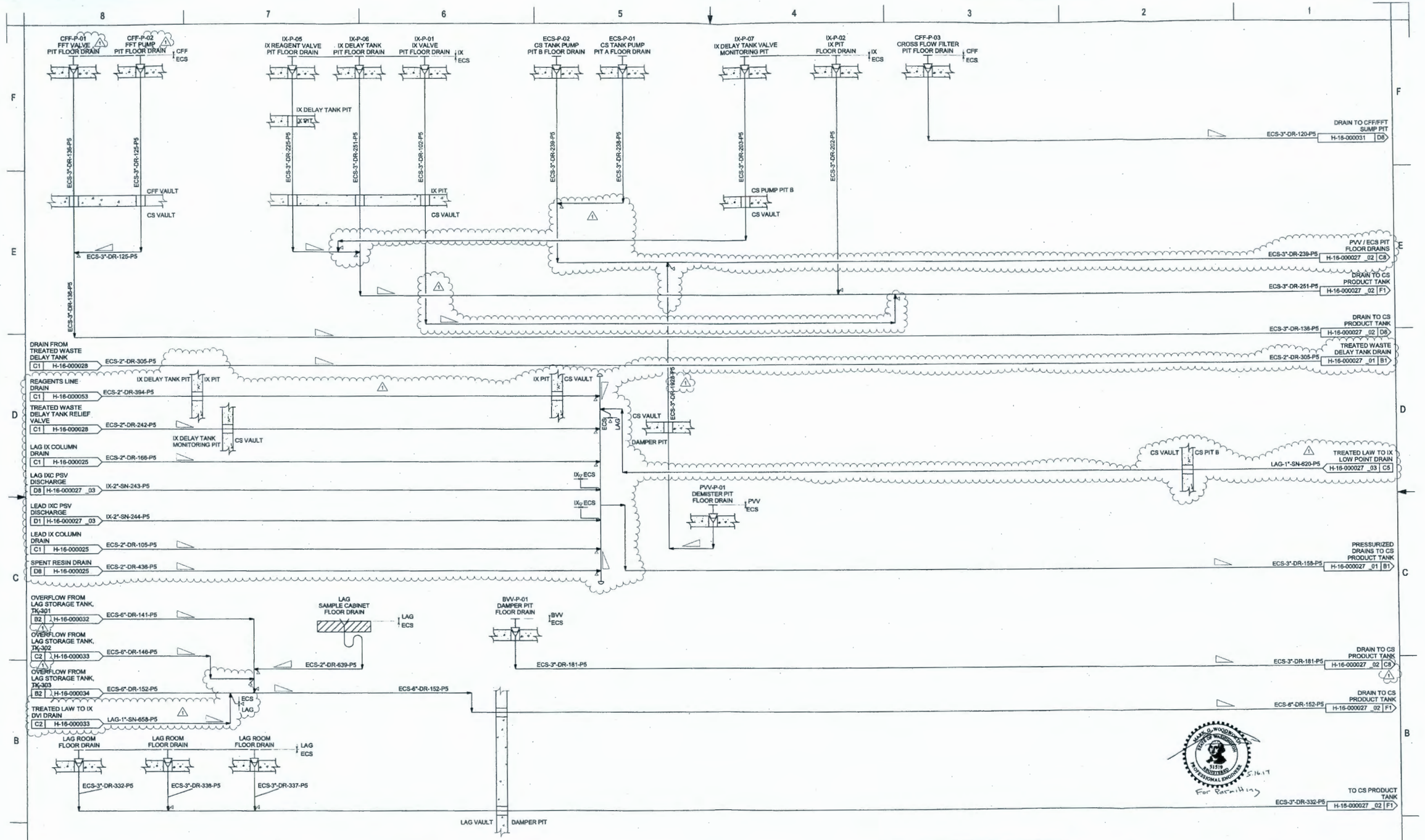

NOTES:

1. DRAIN PLUGS ARE NORMALLY IN PLACE AS SHOWN, AND WILL ONLY BE REMOVED UPON DETECTION OF LIQUID ACCUMULATION.

REVISION APPROVAL RECORD				REV 1	
DISCIPLINE	BY	DATE	DISCIPLINE	BY	DATE
ARCH.	N/A		MECHANICAL	DS	05/15/17
BUILDING SERVICES	WL	05/15/17	PIPING	MJ	05/15/17
CIVIL	N/A		PROCESS	MW	05/15/17
ELECTRICAL	LC	05/15/17	QA / QC	PBG	05/15/17
ENVIRON.	N/A		STRUCTURAL	N/A	
GEN. ARRANG.	N/A		FP	KB	05/15/17
I & C	HF	05/15/17			

DRAWING STATUS					
ISSUED	REV	DATE	SDE	PEM	
PRELIMINARY					
RE-APPROVED FOR DESIGN	1	05/15/17	MW	MS	For DP

NOT APPROVED FOR CONSTRUCTION UNLESS SIGNED AND DATED. DESTROY ALL PRINTS BEARING EARLIER DATE AND/OR REV.NO.

AECOM
URS ENERGY & CONSTRUCTION Inc. - an AECOM Company
ATKINS
AREVA

AECOM PROJECT NO.: 31289

DRAWING TRACEABILITY LIST: DWG NUMBER | TITLE

REFERENCES: REF NUMBER | TITLE

NEXT USED ON H-16-000001

ISSUED FOR 90% DESIGN
NOT FOR CONSTRUCTION

REVISIONS							
1	RE-APPROVED FOR DESIGN	DM	MW	MW	N/A	05/15/17
0	ISSUED FOR DESIGN	DM	JB	MW	N/A	09/19/16
REV	DESCRIPTION	ORIG	CHK	APVD	IDV	DATE

BASIS NO. 202LP

DRAWING NO. 7004

CAUTION
NOT COMPLETE WITHOUT CURRENT CHANGE DOCUMENTS FROM DATABASE

ATTENTION
DESTROY THIS DOCUMENT BY SHREDDING
MAY CONTAIN SENSITIVE INFORMATION

NAME

U.S. DEPARTMENT OF ENERGY
Office of River Protection

LAWPS
P&I D
DRAINS

SIZE F | DRAWING NUMBER H-16-000051 | SHEET 1 | REV 1

SCALE NONE

PLOTTED

DRAWING

H-16-000900

LAWPS CIVIL SITE PLAN

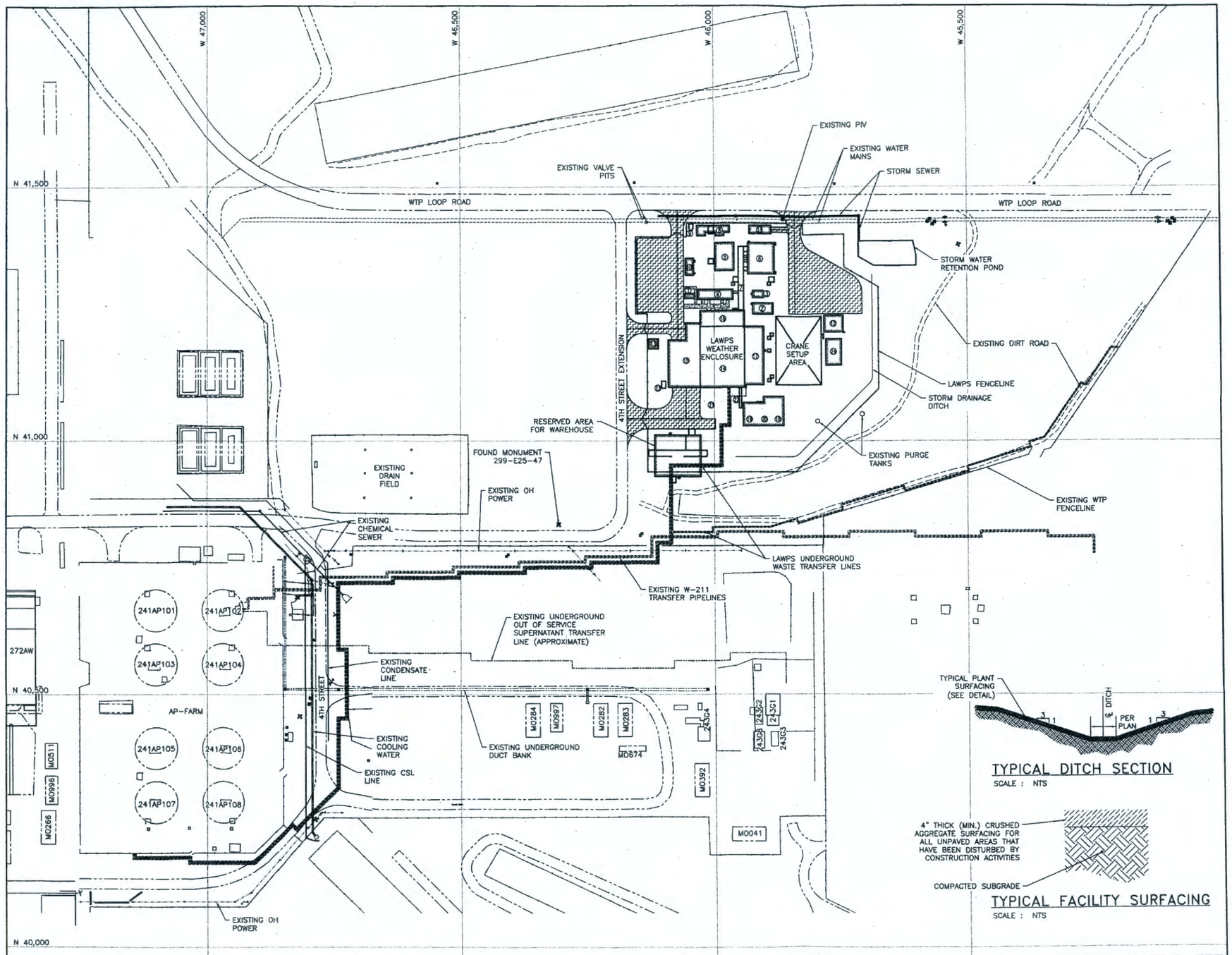

TYPICAL DITCH SECTION

SCALE : NTS

TYPICAL FACILITY SURFACING

SCALE : NTS

GENERAL NOTES

1. ALL COORDINATES SHOWN ON PLANS ARE BASED ON THE PERMANENT HORIZONTAL AND VERTICAL CONTROL OF THE 200 EAST PLANT DATUM.
2. LOCATIONS OF EXISTING 200 EAST AREA FACILITIES AND UTILITIES SHOWN ARE BASED ON HANFORD BASEMAPS AND NOT ALL HAVE BEEN SURVEYED AND VERIFIED. THE LOCATION OF ALL UNDERGROUND UTILITIES SHOWN SHALL BE CONSIDERED APPROXIMATE UNTIL VERIFIED IN FIELD PRIOR TO CONSTRUCTION.

LEGEND

- PROPOSED BUILDING
- PROPOSED ASPHALT PAVING
- PROPOSED FENCE
- EXISTING PAVED ROAD

LAWPS BUILDING KEY

KEY	BLDG #	DESCRIPTION
①	202LP	SANITARY HOLDING TANK
②	202LP	BUILDING/VAULT SUPPLY AIR HANDLING UNITS
③	202LP	BUILDING/VAULT SUPPLY CHILLER UNITS
④	227LP	PERSONNEL CHANGE FACILITY (PCF)
⑤	202LP	TREATED PROCESS WATER SYSTEM/SAFETY SHOWER TANK
⑥	210LP	REAGENT STORAGE AREA
⑦	202LP	UTILITY PIPING TRENCH
⑧	251LP	ELECTRICAL EQUIPMENT CENTER (EEC)
⑨	202LP	TRANSFORMER
⑩	228LP	SAFETY EQUIPMENT BUILDING (SEB)
⑪	202LP	COMPRESSED AIR SYSTEM
⑫	253LP	GENERATOR EQUIPMENT BUILDING (GEB)
⑬	202LP	FIREWATER COLLECTION SUMP
⑭	202LP	WEATHER ENCLOSURE
⑮	202LP	RESIN HANDLING AREA
⑯	202LP	NORTH ANNEX AREA
⑰	202LP	LAG STORAGE AREA
⑱	202LP	EXHAUST AIR HANDLING UNITS
⑲	202LP	STANDBY TANK EXHAUST UNITS (STES)
⑳	202LP	EXHAUST STACKS/STAIR TOWER
㉑	202LP	FUTURE EXPANSION
㉒	202LP	STES TRENCH
㉓	202LP	AIR COOLED CONDENSER
㉔	202LP	ASH MITIGATION PLENUM

40' 0 40' 80' 120'

SCALE: 1" = 80'

ISSUED FOR PERMITTING
NOT FOR CONSTRUCTION

FOR PERMITTING

REVISION APPROVAL RECORD					REV B
DISCIPLINE	BY	DATE	DISCIPLINE	BY	DATE
ARCH.	N/A	N/A	MECHANICAL	N/A	N/A
BUILDING SERVICES	N/A	N/A	PIPING	MJ	5/17/17
CIVIL	MM	5/17/17	PROCESS	N/A	N/A
ELECTRICAL	LC	5/17/17	QA / QC	JS	5/17/17
ENVIRON.	N/A	N/A	STRUCTURAL	FV	5/17/17
GEN. ARRANG.	N/A	N/A	CONSTRUCTION	DM	5/17/17
I & C	N/A	N/A			

DRAWING STATUS				
ISSUED	REV	DATE	SDE	PEM
PRELIMINARY	B	05/17/17	FV	DP
APPROVED FOR DESIGN				

NOT APPROVED FOR CONSTRUCTION UNLESS SIGNED AND DATED. DESTROY ALL PRINTS BEARING EARLIER DATE AND/OR REV.NO.

AECOM
URS ENERGY & CONSTRUCTION Inc. - an AECOM Company
ATKINS
AREVA

AECOM PROJECT NO.: 31269

DWG NUMBER	TITLE

DRAWING TRACEABILITY LIST

REF NUMBER	TITLE
H-16-000416	PIPING PLOT PLAN

REFERENCES

NEXT USED ON

REV NO.	DESCRIPTION	ORIG	CHK	APVD	IDV	DATE
B	ISSUED FOR PERMITTING	MC	MM	FV	N/A	05/17/17
A	ISSUED FOR 60% DESIGN REVIEW	MM	MC	SF	N/A	01/23/17

REVISIONS

BLDG. NO.: 107AP, 202LP, 210LP, 227LP, 228LP, 251LP, 253LP

INDEX NO.: 110

CAUTION
NOT COMPLETE WITHOUT CURRENT CHANGE DOCUMENTS FROM DATABASE

ATTENTION
DESTROY THIS DOCUMENT BY SHREDDING MAY CONTAIN SENSITIVE INFORMATION

NAME	DATE	COMPANY
DRAFTER		
DRAFTING CHECKER		
DISCIPLINE CHECKER		
DESIGN AUTHORITY		

U.S. DEPARTMENT OF ENERGY
Office of River Protection

LAWPS
CIVIL SITE PLAN

SIZE F | DRAWING NUMBER H-16-000900 | SHEET 1 | REV B

SCALE 1" = 80'

PLOTID

DOE_TB_F.DWG (NOV 2015)

DRAWING

H-16-000903

LAWPS CIVIL FENCING PLAN

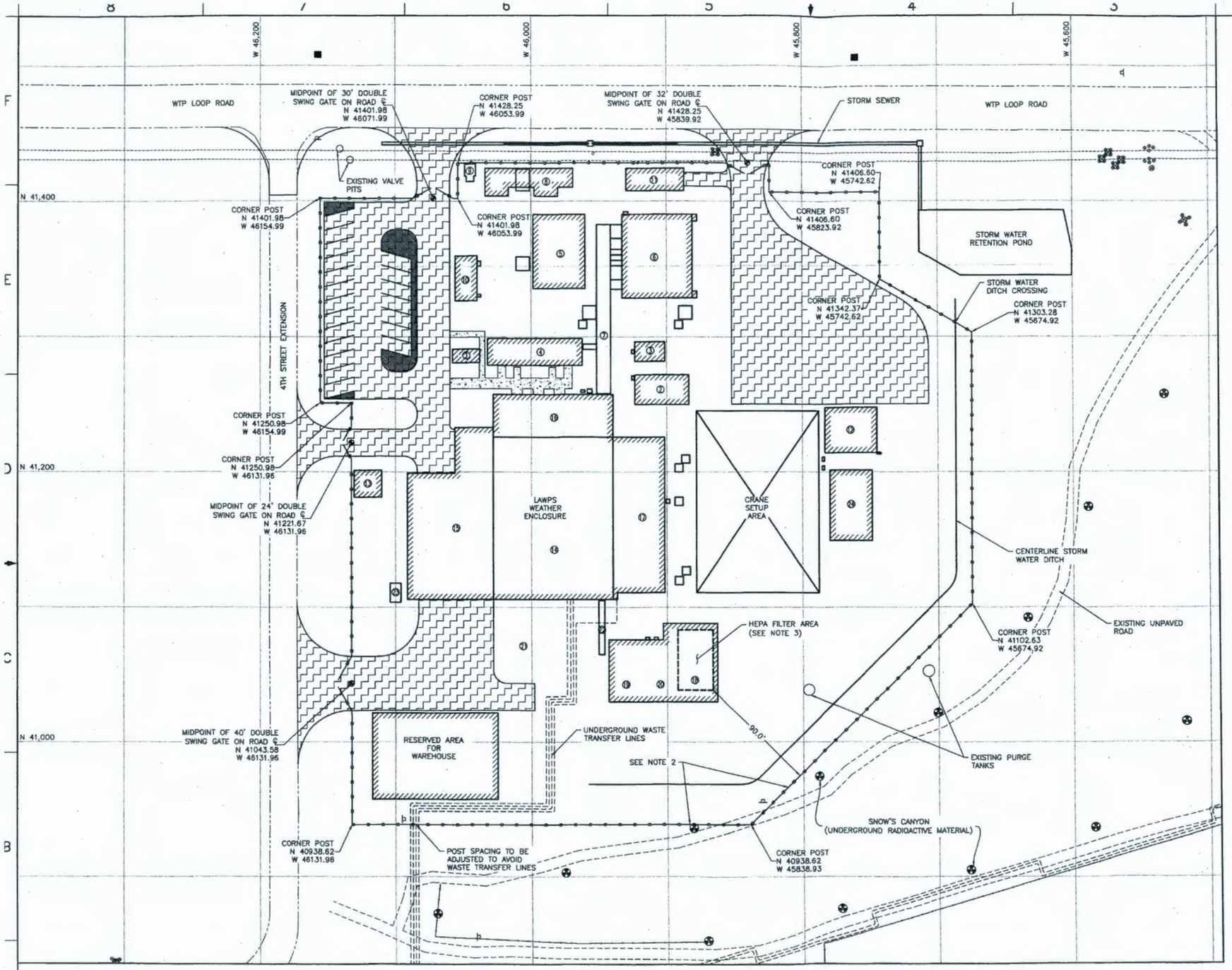

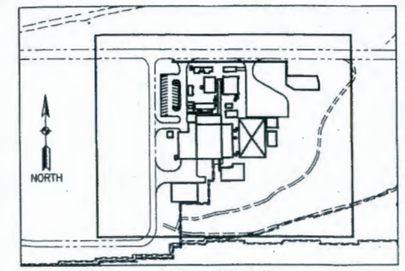

KEY PLAN

NOTES

1. PRIOR TO FENCE INSTALLATION, CONTRACTOR SHALL LOCATE ALL EXISTING UNDERGROUND UTILITIES.
2. FENCE AND CORNER POSTS ARE LOCATED WITHIN SNOW'S CANYON BOUNDARY. PERSONNEL SHALL BE PROPERLY TRAINED TO PERFORM WORK IN THE AREA.
3. 90' RADIOLOGICAL BOUNDARY SET-BACK FROM HEPA FILTER AREA PER CALCULATION 31269-25-CALC-0001, "BULK SHIELDING AND DOSE ASSESSMENT."

REFERENCE SPECIFICATIONS
12-2-001 SURVEYING SPECIFICATION (02 21 00)
12-2-010 CHAIN LINK FENCE AND GATES SPECIFICATION (32 31 13)

LEGEND

- PROPOSED BUILDING
- PROPOSED ASPHALT PAVING
- PROPOSED FENCE
- PROPOSED DOUBLE SWING GATE
- PROPOSED GATE MIDPOINT
- EXISTING PAVED ROAD
- EXISTING UNPAVED ROAD

LAWPS BUILDING KEY

KEY	BLDG #	DESCRIPTION
①	202LP	SANITARY HOLDING TANK
②	202LP	BUILDING/VAULT SUPPLY AIR HANDLING UNITS
③	202LP	BUILDING/VAULT SUPPLY CHILLER UNITS
④	227LP	PERSONNEL CHANGE FACILITY (PCF)
⑤	202LP	TREATED PROCESS WATER SYSTEM/SAFETY SHOWER TANK
⑥	210LP	REAGENT STORAGE AREA
⑦	202LP	UTILITY PIPING TRENCH
⑧	251LP	ELECTRICAL EQUIPMENT CENTER (EEC)
⑨	202LP	TRANSFORMER
⑩	228LP	SAFETY EQUIPMENT BUILDING (SEB)
⑪	202LP	COMPRESSED AIR SYSTEM
⑫	253LP	GENERATOR EQUIPMENT BUILDING (GEB)
⑬	202LP	FIREWATER COLLECTION SUMP
⑭	202LP	WEATHER ENCLOSURE
⑮	202LP	RESIN HANDLING AREA
⑯	202LP	NORTH ANNEX AREA
⑰	202LP	LAG STORAGE AREA
⑱	202LP	EXHAUST AIR HANDLING UNITS
⑲	202LP	STANDBY TANK EXHAUST UNITS (STES)
⑳	202LP	EXHAUST STACKS/STAIR TOWER
㉑	202LP	FUTURE EXPANSION
㉒	202LP	STES TRENCH
㉓	202LP	AIR COOLED CONDENSER
㉔	202LP	ASH MITIGATION PLENUM

15' 0 15' 30' 45'
SCALE: 1" = 30'

ISSUED FOR PERMITTING
NOT FOR CONSTRUCTION

FOR PERMITTING

REVISION APPROVAL RECORD					REV B
DISCIPLINE	BY	DATE	DISCIPLINE	BY	DATE
ARCH.	N/A	N/A	MECHANICAL	N/A	N/A
BUILDING SERVICES	N/A	N/A	PIPING	MJ	5/17/17
CIVIL	MM	5/17/17	PROCESS	N/A	N/A
ELECTRICAL	LC	5/17/17	QA / QC	JS	5/17/17
ENVIRON.	N/A	N/A	STRUCTURAL	FV	5/17/17
GEN. ARRANG.	N/A	N/A	CONSTRUCTION	DM	5/17/17
I & C	N/A	N/A			

DRAWING STATUS				
ISSUED	REV	DATE	SDE	PEM
PRELIMINARY	B	05/17/17	FV	DP
APPROVED FOR DESIGN				

NOT APPROVED FOR CONSTRUCTION UNLESS SIGNED AND DATED. DESTROY ALL PRINTS BEARING EARLIER DATE AND/OR REV.NO.

AECOM
URS ENERGY & CONSTRUCTION Inc. - an AECOM Company
ATKINS
AREVA

AECOM PROJECT NO.: 31269

DWG NUMBER	TITLE
H-16-000416	PIPING PLOT PLAN

DRAWING TRACEABILITY LIST

REF NUMBER	TITLE
NEXT USED ON	REFERENCES

REV NO.	DESCRIPTION	ORIG	CHK	APVD	IDV	DATE
B	ISSUED FOR PERMITTING	MC	MM	FV	N/A	05/17/17
A	ISSUED FOR 60% DESIGN REVIEW	MM	MC	SF	N/A	01/23/17

REVISIONS

BLDG. NO. 107AP 202LP 210LP 227LP 228LP 251LP 253LP
INDEX NO. 200

CAUTION
NOT COMPLETE WITHOUT CURRENT CHANGE DOCUMENTS FROM DATABASE

ATTENTION
DESTROY THIS DOCUMENT BY SHREDDING MAY CONTAIN SENSITIVE INFORMATION

NAME	DATE	SIGNATURE
DRAFTER		
ENGINEERING CHECKER		
DISCIPLINE ENGINEER		
DESIGN AUTHORITY		

U.S. DEPARTMENT OF ENERGY
Office of River Protection

LAWPS CIVIL FENCING PLAN

SIZE F | DRAWING NUMBER H-16-000903 | SHEET 1 | REV B
SCALE 1" = 30'
PLOTID

DRAWING

H-16-001005

LAWPS EQUIPMENT GENERAL ARRANGEMENT – OPERATING FLOOR PLAN

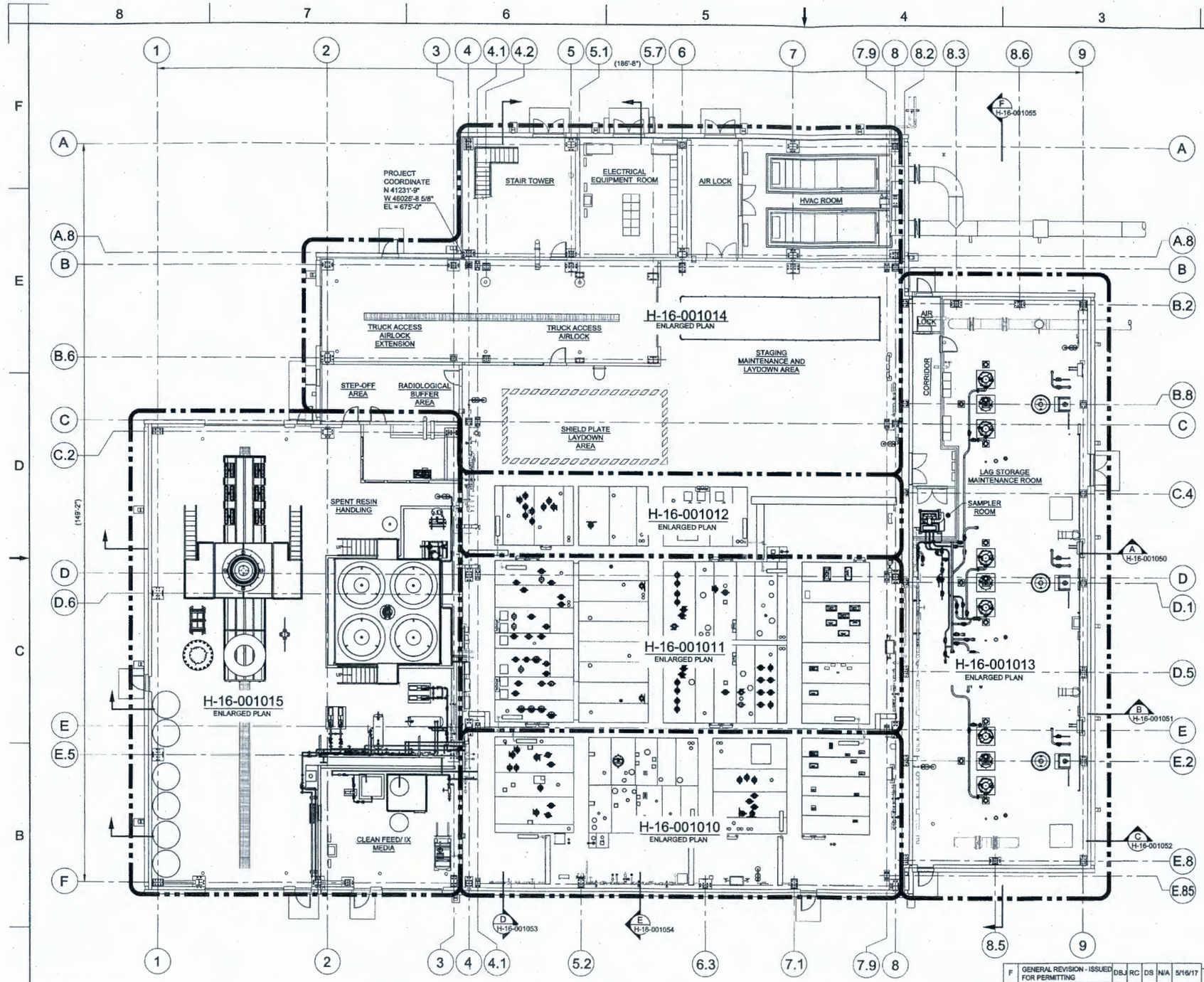

GENERAL NOTES:

1. REFER TO LAWPS CONSTRUCTION SPECIFICATION SECTIONS PROVIDED IN THE CONSTRUCTION CONTRACT FOR QUALITY CONTROL EQUIPMENT SUPPLY & FABRICATION REQUIREMENTS.
2. LAWPS MECHANICAL DRAWING LIST, H-16-001004-01 & 02
3. BALANCE OF PLANT GENERAL ARRANGEMENTS, SEE DRAWINGS H-16-001000-01.
4. ARCHITECTURAL - WEATHER ENCLOSURE , SEE DRAWING H-16-000250-01.
5. STRUCTURAL CONCRETE, SEE DRAWINGS H-16-000302-01.
6. MECHANICAL LAYOUTS, SEE DRAWING H-16-001100-01.
7. FIRE WATER FLOOR DRAINAGE, SEE DRAWING H-16-000272-01.
8. CATCH BASINS & FLOOR TRENCH DRAINS. SEE ARCHITECTURAL - ENCLOSURE TRENCH LAYOUT AND DETAILS H-16-000272-01.
9. EQUIPMENT IDENTIFICATION AND POSITIONING IS PROVIDED ON THE PIT AND VAULT DRAWING SERIES. REFER TO H-16-001100-01 FOR THESE DRAWINGS.
10. COLUMN LINE DIMENSIONS SHOWN ON ARCHITECTURAL - ENCLOSURE OVERALL FLOOR PLAN, H-16-000253-01.
11. KEY EQUIPMENT LOCATED ON EQUIPMENT GA'S. FOR ADDITIONAL DIMENSIONAL DETAIL SEE REFERENCED DRAWING FOR THAT AREA.
12. THE FOLLOWING LISTS PROVIDE EQUIPMENT DATA LINKS TO LOWER TIER DOCUMENTATION.
    - 31269-16-LST-0001_MECHANICAL EQUIPMENT LIST
    - 31269-16-LST-0002_PIPING LINE LIST
    - 31269-16-LST-0003_PIPING SPECIALTY ITEM LIST
    - 31269-16-LST-0004_PIPING TIE-IN LIST
    - 31269-19-LST-0001_LAWPS INSTRUMENT LIST

ONLY FOR PROCESS EQUIPMENT LOCATIONS FOR PERMITTING

SCALE: 1/8" = 1'-0"

ISSUED FOR PERMITTING
NOT FOR CONSTRUCTION

LAWPS - OPERATING FLOOR PLAN

SCALE: 1/8" = 1'-0"

REVISION APPROVAL RECORD				REV F	
DISCIPLINE	BY	DATE	DISCIPLINE	BY	DATE
ARCH.	SVW	5/16/17	MECHANICAL	DS	5/16/17
BUILDING SERVICES	N/A	N/A	PIPING	MJ	5/16/17
CIVIL	MM	5/16/17	PROCESS	MW	5/16/17
ELECTRICAL	LC	5/16/17	QA / QC	PB	5/16/17
ENVIRON.	N/A	N/A	STRUCTURAL	SF	5/16/17
GEN. ARRANG.	N/A	N/A	CONSTRUCTION	DM	5/16/17
I & C	HF	5/16/17	FIRE PROT.	KB	5/16/17
HVAC	WL	5/16/17			

DRAWING STATUS				
ISSUED	REV	DATE	SDE	PEM
PRELIMINARY	F	5/16/17	DS	DP

NOT APPROVED FOR CONSTRUCTION UNLESS SIGNED AND DATED. DESTROY ALL PRINTS BEARING EARLIER DATE AND/OR REV NO.

AECOM
URS ENERGY & CONSTRUCTION Inc. - an AECOM Company
ATKINS
AREVA

AECOM PROJECT NO.: 31280

DWG NUMBER	TITLE
	DRAWING TRACEABILITY LIST

REF NUMBER	TITLE
	REFERENCES
NEXT USED ON	END ITEM

REV	DESCRIPTION	ORG	CHK	APVD	IDV	DATE
F	GENERAL REVISION - ISSUED FOR PERMITTING	DBJ	RC	DS	N/A	5/16/17
E	GENERAL REVISION - ISSUED FOR 60% DESIGN REVIEW	DBJ	RC	DS	N/A	1/23/17
D	ISSUED FOR 30% DESIGN REVIEW	DBJ	RC	DS	N/A	11/2/15
A-C	SEE SK-1907-S-712-01 FOR PREVIOUS REVISION HISTORY	DBJ	DS	JR	TBV	3/26/15

REVISIONS

BLDG. NO. 202LP

INDEX NO. 0801

CAUTION
NOT COMPLETE WITHOUT CURRENT CHANGE DOCUMENTS FROM DATABASE

ATTENTION
DESTROY THIS DOCUMENT BY SHREDDING
MAY CONTAIN SENSITIVE INFORMATION

NAME	DATE	COMPANY
DRAWN BY		
DESIGN APPROVAL		
DISCIPLINE ENGINEER		
ENGINEER		

U.S. DEPARTMENT OF ENERGY
Office of River Protection

LAWPS
EQUIPMENT GENERAL ARRANGEMENT
OPERATING FLOOR PLAN

SIZE	DRAWING NUMBER	SHEET	REV
F	H-16-001005	1	F

SCALE SHOWN

PLOTID

DOE_T9_F.DWG (NOV 2013)

DRAWING

H-16-001010

LAWPS EQUIPMENT GENERAL ARRANGEMENT – ENLARGED FLOOR PLAN CFF

NOTES:

1. FOR GENERAL NOTES SEE DRAWING H-16-001005-01.

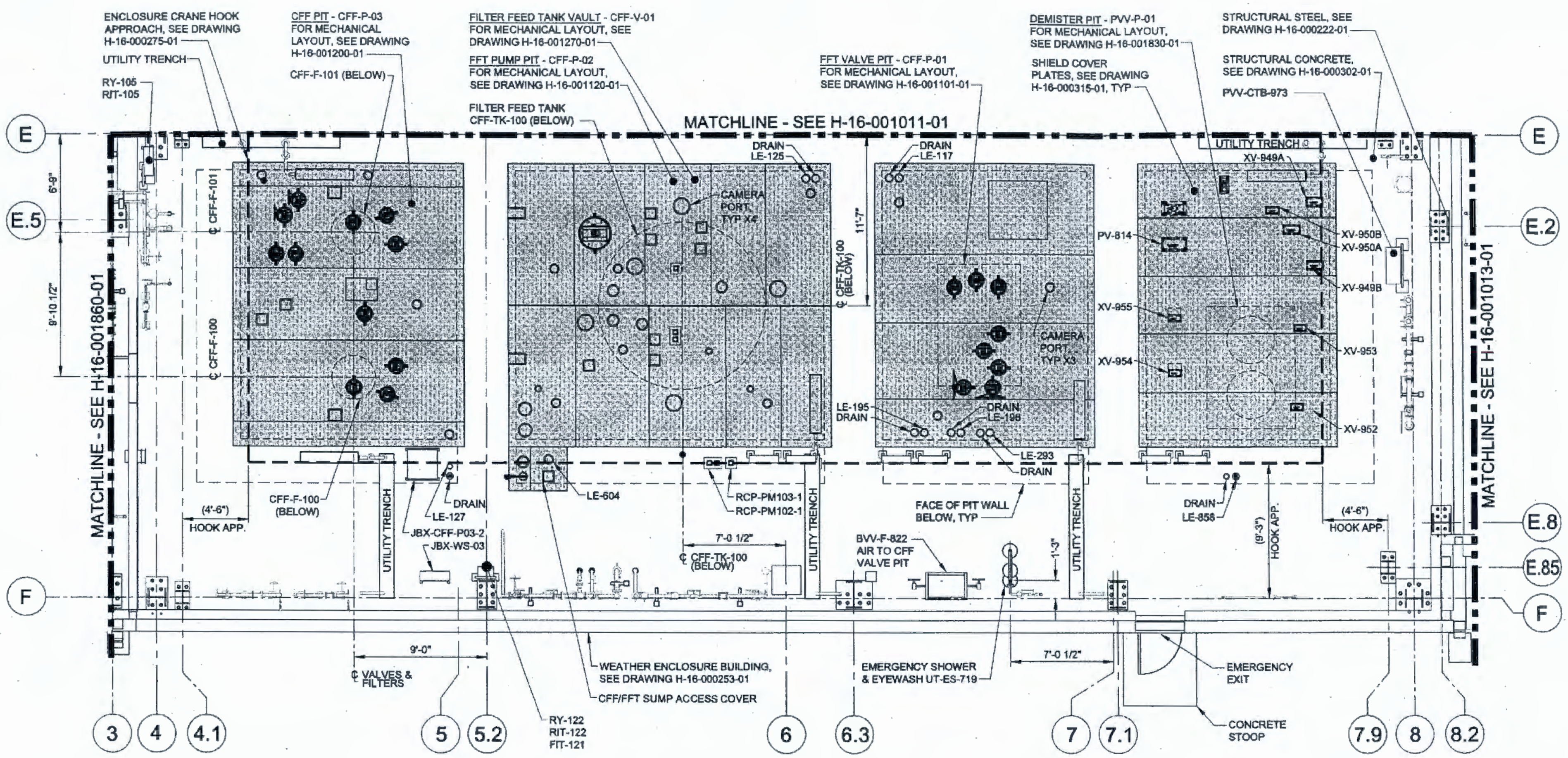

CFF/FFT DEMISTER PIT ENLARGED PLAN

SCALE: 1/4" = 1'-0"

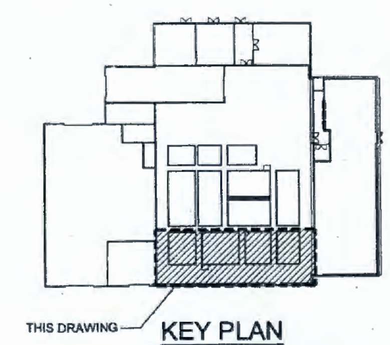

KEY PLAN

LARRY E. ULBRICHT, STATE OF WASHINGTON, 27921, REGISTERED PROFESSIONAL ENGINEER

ONLY FOR PROCESS EQUIPMENT LOCATIONS FOR PERMITTING

2' 0 2' 4' 6'
SCALE: 1/4" = 1'-0"

ISSUED FOR PERMITTING
NOT FOR CONSTRUCTION

REVISION APPROVAL RECORD				REV C	
DISCIPLINE	BY	DATE	DISCIPLINE	BY	DATE
ARCH.	SVW	5/16/17	MECHANICAL	DS	5/16/17
BUILDING SERVICES	N/A	N/A	PIPING	MJ	5/16/17
CIVIL	MM	5/16/17	PROCESS	MW	5/16/17
ELECTRICAL	LC	5/16/17	QA / QC	PB	5/16/17
ENVIRON.	N/A	N/A	STRUCTURAL	SF	5/16/17
GEN. ARRANG.	N/A	N/A	CONSTRUCTION	DM	5/16/17
I & C	HF	5/16/17	FIRE PROT.	KB	5/16/17
HVAC	WL	5/16/17			

DRAWING STATUS				
ISSUED	REV	DATE	SDE	PEM
PRELIMINARY	C	5/16/17	DS	DP

NOT APPROVED FOR CONSTRUCTION UNLESS SIGNED AND DATED. DESTROY ALL PRINTS BEARING EARLIER DATE AND/OR REV.NO.

AECOM
URS ENERGY & CONSTRUCTION Inc. - an AECOM Company
ATKINS AREVA
AECOM PROJECT NO.: 31269

DWG NUMBER	TITLE

DRAWING TRACEABILITY LIST

REF NUMBER	TITLE

REFERENCES

NEXT USED ON H-16-001005-01

REV	DESCRIPTION	ORG	CHK	APVD	IDV	DATE
C	GENERAL REVISION - ISSUED FOR PERMITTING	DBJ	RC	DS	N/A	5/16/17
B	GENERAL REVISION - ISSUED FOR 60% DESIGN REVIEW	DBJ	RC	DS	N/A	1/23/17
A	APPROVED FOR 30% DESIGN REVIEW	DBJ	RC	DS	N/A	11/12/15

REVISIONS

BLDG. NO. 202LP
INDEX NO. 0801

CAUTION
NOT COMPLETE WITHOUT CURRENT CHANGE DOCUMENTS FROM DATABASE

ATTENTION
DESTROY THIS DOCUMENT BY SHREDDING
MAY CONTAIN SENSITIVE INFORMATION

NAME | DATE | COMPANY
DRAWN BY
DRAFTING APPROVAL
DISCIPLINE ENGINEER
ENGINEER

U.S. DEPARTMENT OF ENERGY
Office of River Protection

LAWPS
EQUIPMENT GENERAL ARRANGEMENT
CFF/FFT DEMISTER PIT ENLARGED PLAN

SIZE F | DRAWING NUMBER H-16-001010 | SHEET 1 | REV C
SCALE SHOWN
PLOTID
DOE_TB_F.DWG (NOV 2015)

DRAWING

H-16-001011

LAWPS EQUIPMENT GENERAL ARRANGEMENT - ENLARGED FLOOR PLAN IX & CS

NOTES:

1. FOR GENERAL NOTES SEE DRAWING H-16-001005-01.

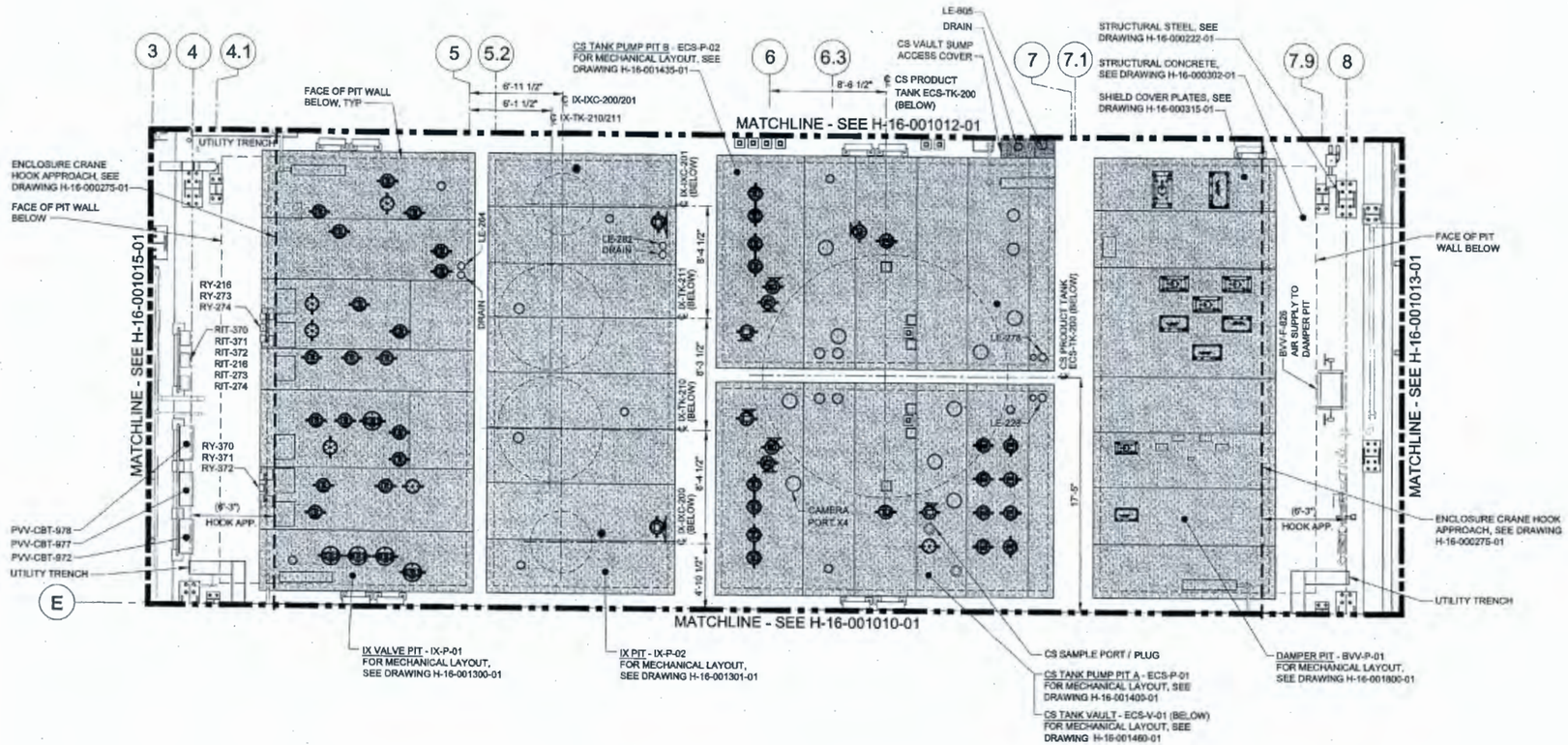

IX/CS DAMPER PIT ENLARGED PLAN

SCALE: 1/4" = 1'-0"

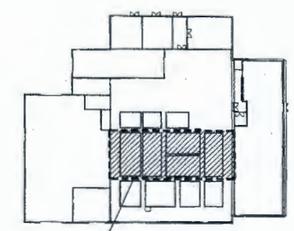

KEY PLAN

ONLY FOR PROCESS EQUIPMENT LOCATIONS FOR PERMITTING / LEE HOLTS

2' 0 2' 4' 6'

SCALE: 1/4" = 1'-0"

ISSUED FOR PERMITTING NOT FOR CONSTRUCTION

REVISION APPROVAL RECORD				REV C	
DISCIPLINE	BY	DATE	DISCIPLINE	BY	DATE
ARCH.	SVW	5/16/17	MECHANICAL	DS	5/16/17
BUILDING SERVICES	N/A	N/A	PIPING	MJ	5/16/17
CIVIL	MM	5/16/17	PROCESS	MW	5/16/17
ELECTRICAL	LC	5/16/17	QA / QC	PB	5/16/17
ENVIRON.	N/A	N/A	STRUCTURAL	SF	5/16/17
GEN. ARRANG.	N/A	N/A	CONSTRUCTION	DM	5/16/17
I & C	HF	5/16/17	FIRE PROT.	KB	5/16/17
HVAC	WL	5/16/17			

DRAWING STATUS				
ISSUED	REV	DATE	SDE	PEM
PRELIMINARY	C	5/16/17	DS	DP

NOT APPROVED FOR CONSTRUCTION UNLESS SIGNED AND DATED. DESTROY ALL PRINTS BEARING EARLIER DATE AND/OR REV NO.

AECOM
URS ENERGY & CONSTRUCTION Inc. - an AECOM Company
ATKINS
AREVA

AECOM PROJECT NO.: 31209

DWG NUMBER	TITLE

DRAWING TRACEABILITY LIST

REF NUMBER	TITLE

REFERENCES

NEXT USED ON H-16-001005-01

REV	DESCRIPTION	ORG	CHK	APVD	IDV	DATE
C	GENERAL REVISION - ISSUED FOR PERMITTING	DBJ	RC	DS	N/A	5/16/17
B	GENERAL REVISION - ISSUED FOR 60% DESIGN REVIEW	DBJ	RC	DS	N/A	1/23/17
A	APPROVED FOR 30% DESIGN REVIEW	DBJ	RC	DS	N/A	11/2/15

REV NO. | DESCRIPTION | REVISIONS

BLDG. NO. 202LP

DRAWING NO. 0801

CAUTION
NOT COMPLETE WITHOUT CURRENT CHANGE DOCUMENTS FROM DATABASE

ATTENTION
DESTROY THIS DOCUMENT BY SHREDDING MAY CONTAIN SENSITIVE INFORMATION

NAME	DATE	COMPANY
DRAWN BY		
DRAFTING APPROVAL		
DISCIPLINE ENGINEER		
ENGINEER		

U.S. DEPARTMENT OF ENERGY
Office of River Protection

LAWPS
EQUIPMENT GENERAL ARRANGEMENT
IX/CS DAMPER PIT ENLARGED PLAN

SIZE F | DRAWING NUMBER H-16-001011 | SHEET 1 | REV C

SCALE SHOWN

PLOTID

DOE_TR_F (DWG (REV 3/08))

DRAWING

H-16-001012

LAWPS EQUIPMENT GENERAL ARRANGEMENT - IX DELAY TANK AND PITS

NOTES:

1. FOR GENERAL NOTES SEE DRAWING H-16-001005-01.

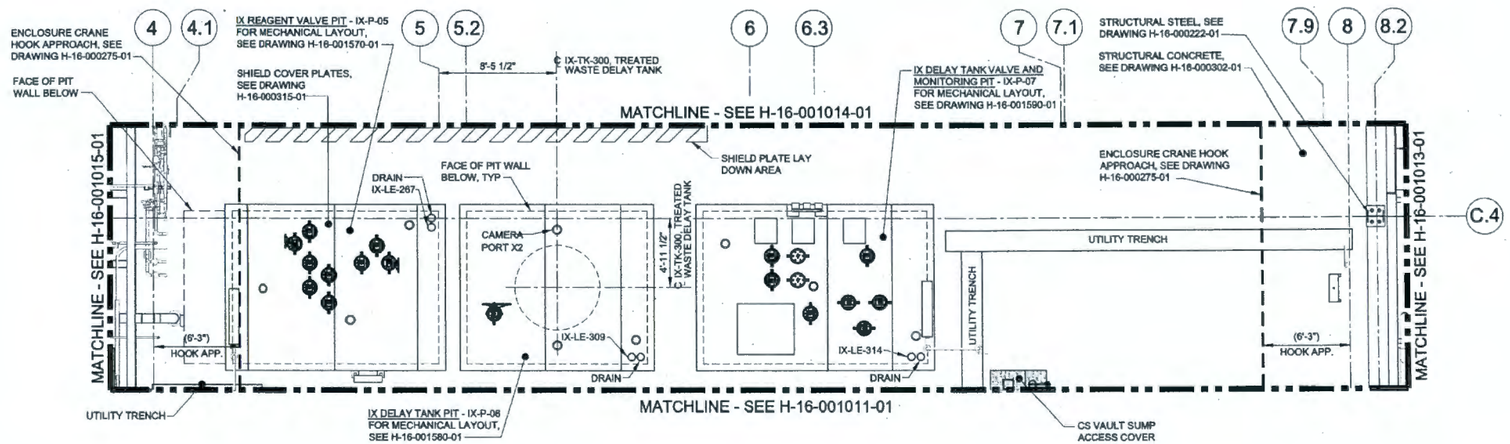

IX REAGENT VALVE PIT / IX DELAY TANK & IX DELAY TANK VALVE AND MONITORING PIT ENLARGED PLAN

SCALE: 1/4" = 1'-0"

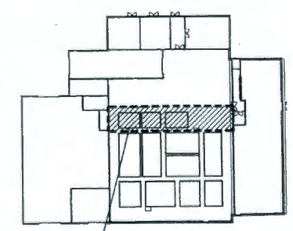

KEY PLAN

ONLY FOR PROCESS EQUIPMENT LAYOUTS FOR PERMITTING LEAD PLANT

2' 0 2' 4' 6'
SCALE: 1/4" = 1'-0"

ISSUED FOR PERMITTING
NOT FOR CONSTRUCTION

REVISION APPROVAL RECORD					REV C
DISCIPLINE	BY	DATE	DISCIPLINE	BY	DATE
ARCH.	SVW	5/16/17	MECHANICAL	DS	5/16/17
BUILDING SERVICES	N/A	N/A	PIPING	MJ	5/16/17
CIVIL	MM	5/16/17	PROCESS	MW	5/16/17
ELECTRICAL	LC	5/16/17	QA / QC	PB	5/16/17
ENVIRON.	N/A	N/A	STRUCTURAL	SF	5/16/17
GEN. ARRANG.	N/A	N/A	CONSTRUCTION	DM	5/16/17
I & C	HF	5/16/17	FIRE PROT.	KB	5/16/17
HVAC	WL	5/16/17			

DRAWING STATUS				
ISSUED	REV	DATE	SDE	PEM
PRELIMINARY	C	5/16/17	DS	DP

NOT APPROVED FOR CONSTRUCTION UNLESS SIGNED AND DATED. DESTROY ALL PRINTS BEARING EARLIER DATE AND/OR REV NO.

AECOM
URS ENERGY & CONSTRUCTION Inc. - an AECOM Company
ATKINS
AREVA

AECOM PROJECT NO.: 31289

DWG NUMBER	TITLE
DRAWING TRACEABILITY LIST	

REF NUMBER	TITLE
REFERENCES	
NEXT USED ON H-16-001005-01	

REV NO	DESCRIPTION	ORG	CHK	APVD	IDV	DATE
C	GENERAL REVISION - ISSUED FOR PERMITTING	DBJ	RC	DS	N/A	5/16/17
B	GENERAL REVISION - ISSUED FOR 60% DESIGN REVIEW	DBJ	RC	DS	N/A	1/23/17
A	APPROVED FOR 30% DESIGN REVIEW	DBJ	RC	DS	N/A	11/2/15

REVISIONS

BLDG NO. 202LP

INDEX NO. 0801

CAUTION
NOT COMPLETE WITHOUT CURRENT CHANGE DOCUMENTS FROM DATABASE

ATTENTION
DESTROY THIS DOCUMENT BY SHREDDING MAY CONTAIN SENSITIVE INFORMATION

NAME	DATE	COMPANY
DRAWN BY		
DRAFTING APPROVAL		
DISCIPLINE ENGINEER		
DESIGNER		

U.S. DEPARTMENT OF ENERGY
Office of River Protection

LAWPS
EQUIPMENT GENERAL ARRANGEMENT
IX DELAY TANK AND PITS ENLARGED PLAN

SIZE F | DRAWING NUMBER H-16-001012 | SHEET 1 | REV C

SCALE SHOWN

PLOTID

DOE_TB_F.DWG (NOV 2010)

DRAWING

H-16-001013

LAWPS EQUIPMENT GENERAL ARRANGEMENT - ENLARGED FLOOR PLAN LAG

NOTES:

1. FOR GENERAL NOTES SEE DRAWING H-18-001005-01.

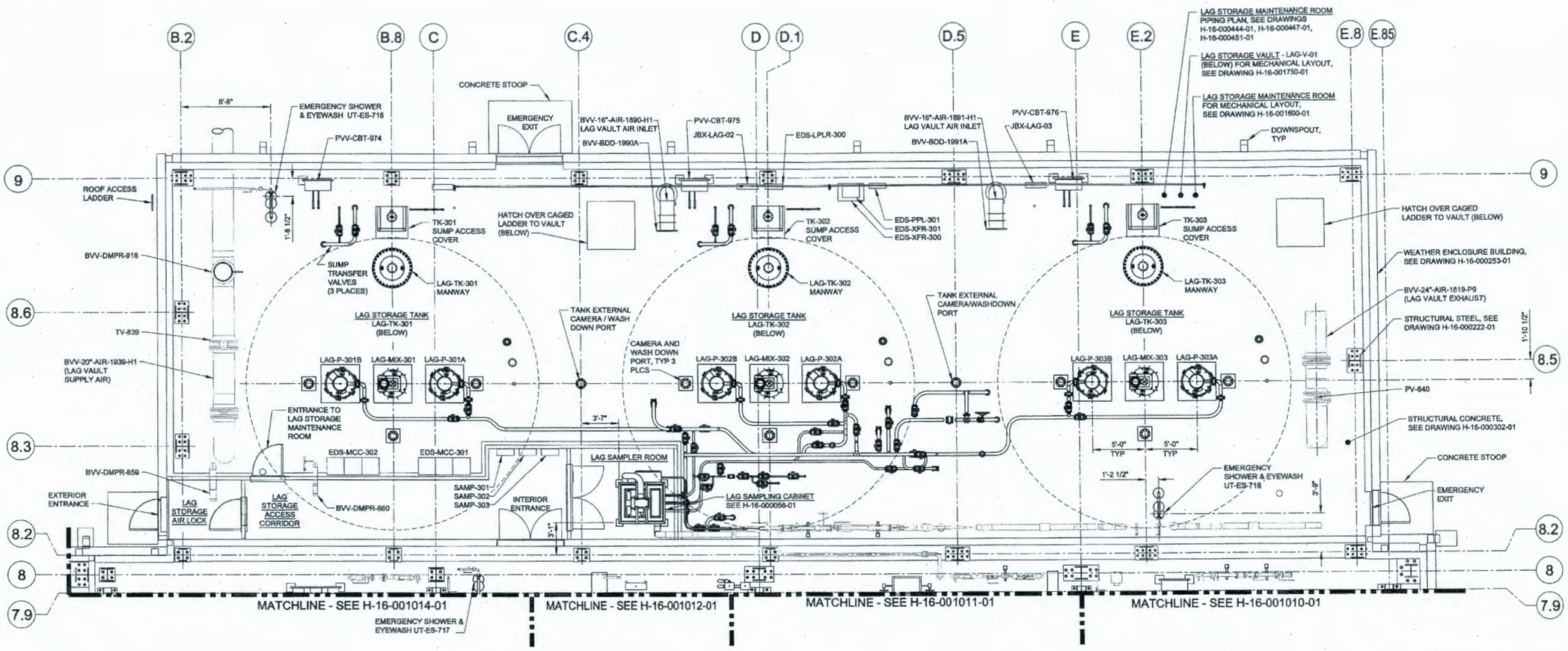

LAG STORAGE MAINTENANCE ROOM ENLARGED PLAN

SCALE: 1/4" = 1'-0"

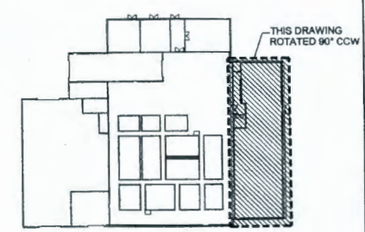

KEY PLAN

Only for Process Equipment Locations For Permitting / Ed 7/6/17

2' 0 2' 4' 6'
SCALE: 1/4" = 1'-0"

ISSUED FOR PERMITTING NOT FOR CONSTRUCTION

REVISION APPROVAL RECORD				REV	C
DISCIPLINE	BY	DATE	DISCIPLINE	BY	DATE
ARCH.	SVW	5/16/17	MECHANICAL	DS	5/16/17
BUILDING SERVICES	N/A	N/A	PIPING	MJ	5/16/17
CIVIL	MM	5/16/17	PROCESS	MW	5/16/17
ELECTRICAL	LC	5/16/17	QA / QC	PB	5/16/17
ENVIRON.	N/A	N/A	STRUCTURAL	SF	5/16/17
GEN. ARRANG.	N/A	N/A	CONSTRUCTION	DM	5/16/17
I & C	HF	5/16/17	FIRE PROT.	KB	5/16/17
HVAC	WL	5/16/17			

DRAWING STATUS				
ISSUED	REV	DATE	SDE	PEM
PRELIMINARY	C	5/16/17	DS	DP

NOT APPROVED FOR CONSTRUCTION UNLESS SIGNED AND DATED. DESTROY ALL PRINTS BEARING EARLIER DATE AND/OR REV NO.

AECOM
URS ENERGY & CONSTRUCTION Inc. - an AECOM Company
ATKINS
AREVA

AECOM PROJECT NO.: 31269

DWG NUMBER	TITLE

DRAWING TRACEABILITY LIST

REF NUMBER	TITLE
NEXT USED ON	H-16-001005-01

REFERENCES

REV NO	DESCRIPTION

REVISIONS

REV	DESCRIPTION	ORG	CHK	APVD	IDV	DATE
C	GENERAL REVISION - ISSUED FOR PERMITTING	DBJ	RC	DS	N/A	5/16/17
B	GENERAL REVISION - ISSUED FOR 60% DESIGN REVIEW	DBJ	RC	DS	N/A	1/23/17
A	APPROVED FOR 30% DESIGN REVIEW	DBJ	RC	DS	N/A	11/2/15

BLDG. NO. 202LP

INDEX NO. 0801

CAUTION
NOT COMPLETE WITHOUT CURRENT CHANGE DOCUMENTS FROM DATABASE

ATTENTION
DESTROY THIS DOCUMENT BY SHREDDING MAY CONTAIN SENSITIVE INFORMATION

NAME	DATE	Company
DRAWN BY		
DRAFTING APPROVAL		
DISCIPLINE ENGINEER		
DESIGNER		

U.S. DEPARTMENT OF ENERGY
Office of River Protection

LAWPS
EQUIPMENT GENERAL ARRANGEMENT
LAG STOR MAINT ROOM ENLARGED PLAN

SIZE F | DRAWING NUMBER H-16-001013 | SHEET 1 | REV C

SCALE SHOWN

PLOTTED

DOE_TS_F DWG (NOV 2012)

DRAWING

H-16-001014

LAWPS EQUIPMENT GENERAL ARRANGEMENT - UTILITY ROOM & TRUCK ACCESS

NOTES:

1. FOR GENERAL NOTES SEE DRAWING H-16-001005-01.

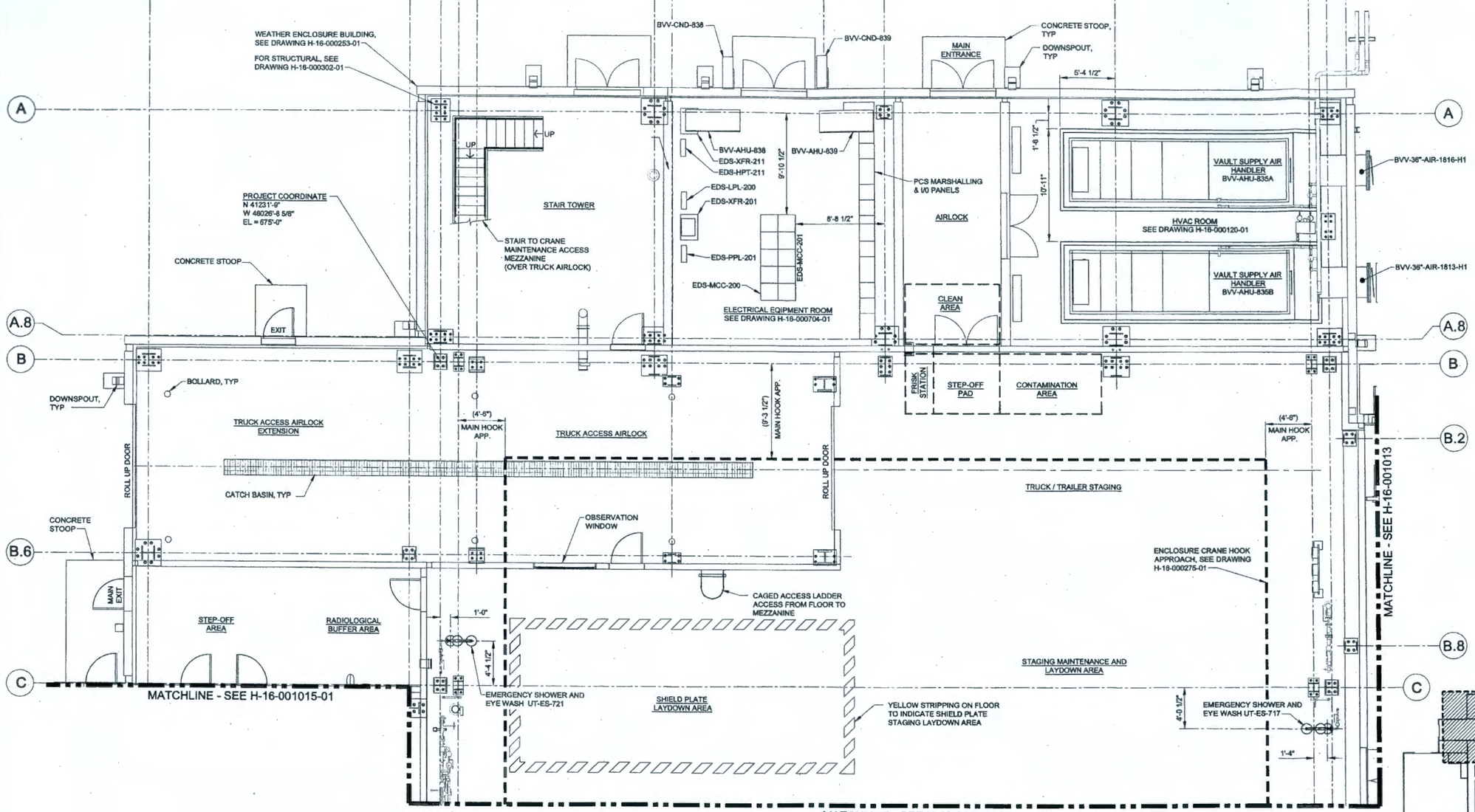

UTILITY ROOM & TRUCK ACCESS ENLARGED PLAN

SCALE: 1/4" = 1'-0"

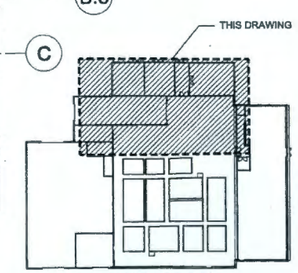

KEY PLAN

LARRY E. ULBRIGHT STATE OF WASHINGTON 23921 REGISTERED PROFESSIONAL ENGINEER

ONLY FOR PROCESS EQUIPMENT LOCATIONS FOR PERMITTING LEGI STUDY

2' 0 2' 4' 6'
SCALE: 1/4" = 1'-0"

ISSUED FOR PERMITTING NOT FOR CONSTRUCTION

REVISION APPROVAL RECORD				REV C	
DISCIPLINE	BY	DATE	DISCIPLINE	BY	DATE
ARCH.	SVW	5/16/17	MECHANICAL	DS	5/16/17
BUILDING SERVICES	N/A	N/A	PIPING	MJ	5/16/17
CIVIL	MM	5/16/17	PROCESS	MW	5/16/17
ELECTRICAL	LC	5/16/17	QA / QC	PB	5/16/17
ENVIRON.	N/A	N/A	STRUCTURAL	SF	5/16/17
GEN. ARRANG.	N/A	N/A	CONSTRUCTION	DM	5/16/17
I & C	HF	5/16/17	FIRE PROT.	KB	5/16/17
HVAC	WL	5/16/17			

DRAWING STATUS				
ISSUED	REV	DATE	SDE	PEM
PRELIMINARY	C	5/16/17	DS	DP

NOT APPROVED FOR CONSTRUCTION UNLESS SIGNED AND DATED. DESTROY ALL PRINTS BEARING EARLIER DATE AND/OR REV.NO.

AECOM
URS ENERGY & CONSTRUCTION Inc. - an AECOM Company
ATKINS
AREVA

AECOM PROJECT NO.: 31269

DRAWING TRACEABILITY LIST			
DWG NUMBER	TITLE	REF NUMBER	TITLE
		REFERENCES	
		NEXT USED ON	H-16-001005-01

REVISIONS						
REV	DESCRIPTION	ORG	CHK	APVD	IDV	DATE
C	GENERAL REVISION - ISSUED FOR PERMITTING	DBJ	RC	DS	N/A	5/16/17
B	GENERAL REVISION - ISSUED FOR 60% DESIGN REVIEW	DBJ	RC	DS	N/A	1/23/17
A	APPROVED FOR 30% DESIGN REVIEW	DBJ	RC	DS	N/A	11/2/15

BLDG NO. 202LP

INDEX NO. 0801

CAUTION
NOT COMPLETE WITHOUT CURRENT CHANGE DOCUMENTS FROM DATABASE

ATTENTION
DESTROY THIS DOCUMENT BY SHREDDING MAY CONTAIN SENSITIVE INFORMATION

NAME	DATE	COMPANY
DRAWN BY		
CRAFTSMAN APPROVAL		
DISCIPLINE ENGINEER		
ENGINEER		

U.S. DEPARTMENT OF ENERGY
Office of River Protection

LAWPS
EQUIPMENT GENERAL ARRANGEMENT
UTL RM & TRUCK ACCESS ENLARGED PLAN

SIZE F | DRAWING NUMBER H-16-001014 | SHEET 1 | REV C

SCALE SHOWN

PLOTID

CCE_TB_F.DWG (NOV 2016)

DRAWING

H-16-001050

LAWPS EQUIPMENT GENERAL ARRANGEMENT - SECTION A

NOTES:

1. FOR GENERAL NOTES SEE DRAWING H-16-001005-01.

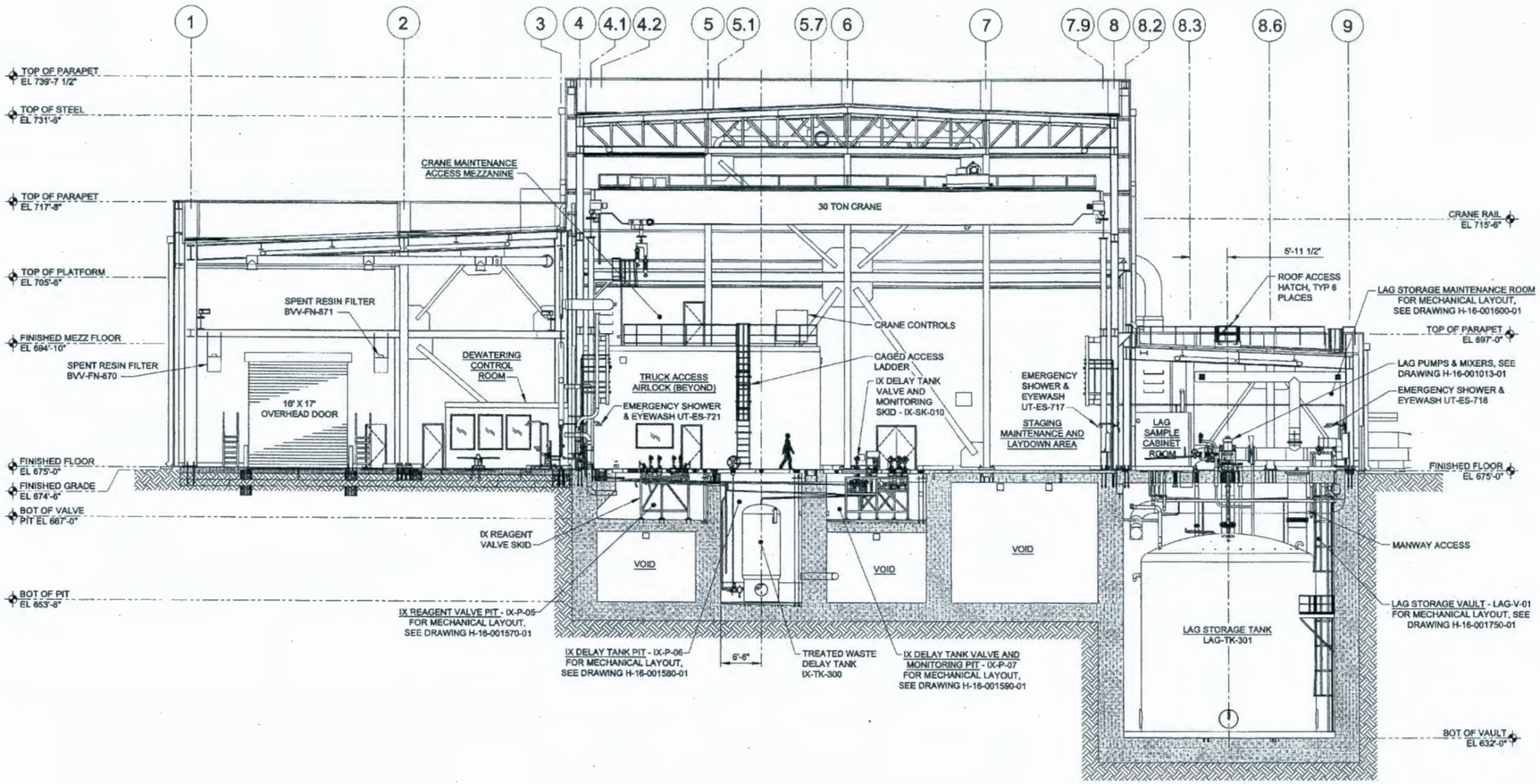

SECTION A
SCALE : 1/8"=1'-0"
H-16-001005

LARRY E. ULBRICHT
STATE OF NEVADA
8-27921
PROFESSIONAL ENGINEER

ONLY FOR PROCESS EQUIPMENT LOCATIONS FOR PERMITTING LEU 5/16/17

4' 0 4' 8' 12'
SCALE: 1/8" = 1'-0"

ISSUED FOR PERMITTING NOT FOR CONSTRUCTION

REVISION APPROVAL RECORD				REV	C
DISCIPLINE	BY	DATE	DISCIPLINE	BY	DATE
ARCH.	SVW	5/16/17	MECHANICAL	DS	5/16/17
BUILDING SERVICES	N/A	N/A	PIPING	MJ	5/16/17
CIVIL	MM	5/16/17	PROCESS	MW	5/16/17
ELECTRICAL	LC	5/16/17	QA / QC	PB	5/16/17
ENVIRON.	N/A	N/A	STRUCTURAL	SF	5/16/17
GEN. ARRANG.	N/A	N/A	CONSTRUCTION	DM	5/16/17
I & C	HF	5/16/17	FIRE PROT.	KB	5/16/17
HVAC	WL	5/16/17			

DRAWING STATUS				
ISSUED	REV	DATE	SDE	PEM
PRELIMINARY	C	5/16/17	DS	DP

NOT APPROVED FOR CONSTRUCTION UNLESS SIGNED AND DATED. DESTROY ALL PRINTS BEARING EARLIER DATE AND/OR REV.NO.

AECOM
URS ENERGY & CONSTRUCTION Inc. - an AECOM Company
ATKINS
AREVA

AECOM PROJECT NO.: 31269

DWG NUMBER	TITLE

DRAWING TRACEABILITY LIST

REF NUMBER	TITLE

REFERENCES
NEXT USED ON H-16-001005-01

REV	DESCRIPTION	ORG	CHK	APVD	IDV	DATE
C	GENERAL REVISION - ISSUED FOR PERMITTING	DBJ	RC	DS	N/A	5/16/17
B	GENERAL REVISION - ISSUED FOR 60% DESIGN REVIEW	DBJ	RC	DS	N/A	1/23/17
A	APPROVED FOR 30% DESIGN REVIEW	DBJ	RC	DS	N/A	11/2/15

REV NO. | DESCRIPTION
REVISIONS

BLDG. NO 202LP
INDEX NO 0801

CAUTION
NOT COMPLETE WITHOUT CURRENT CHANGE DOCUMENTS FROM DATABASE

ATTENTION
DESTROY THIS DOCUMENT BY SHREDDING MAY CONTAIN SENSITIVE INFORMATION

NAME	DATE	COMPANY
DRAWN BY		
GRAPHICS APPROVAL		
DISCIPLINE ENGINEER		
ENGINEER		

U.S. DEPARTMENT OF ENERGY
Office of River Protection

LAWPS
EQUIPMENT GENERAL ARRANGEMENT
SECTION A

SIZE F | DRAWING NUMBER H-16-001050 | SHEET 1 | REV C
SCALE SHOWN
PLOTTD
DOE_TB_F DWG (NOV 2016)

DRAWING

H-16-001051

LAWPS EQUIPMENT GENERAL ARRANGEMENT - SECTION B

NOTES:

1. FOR GENERAL NOTES SEE DRAWING H-16-001005-01.

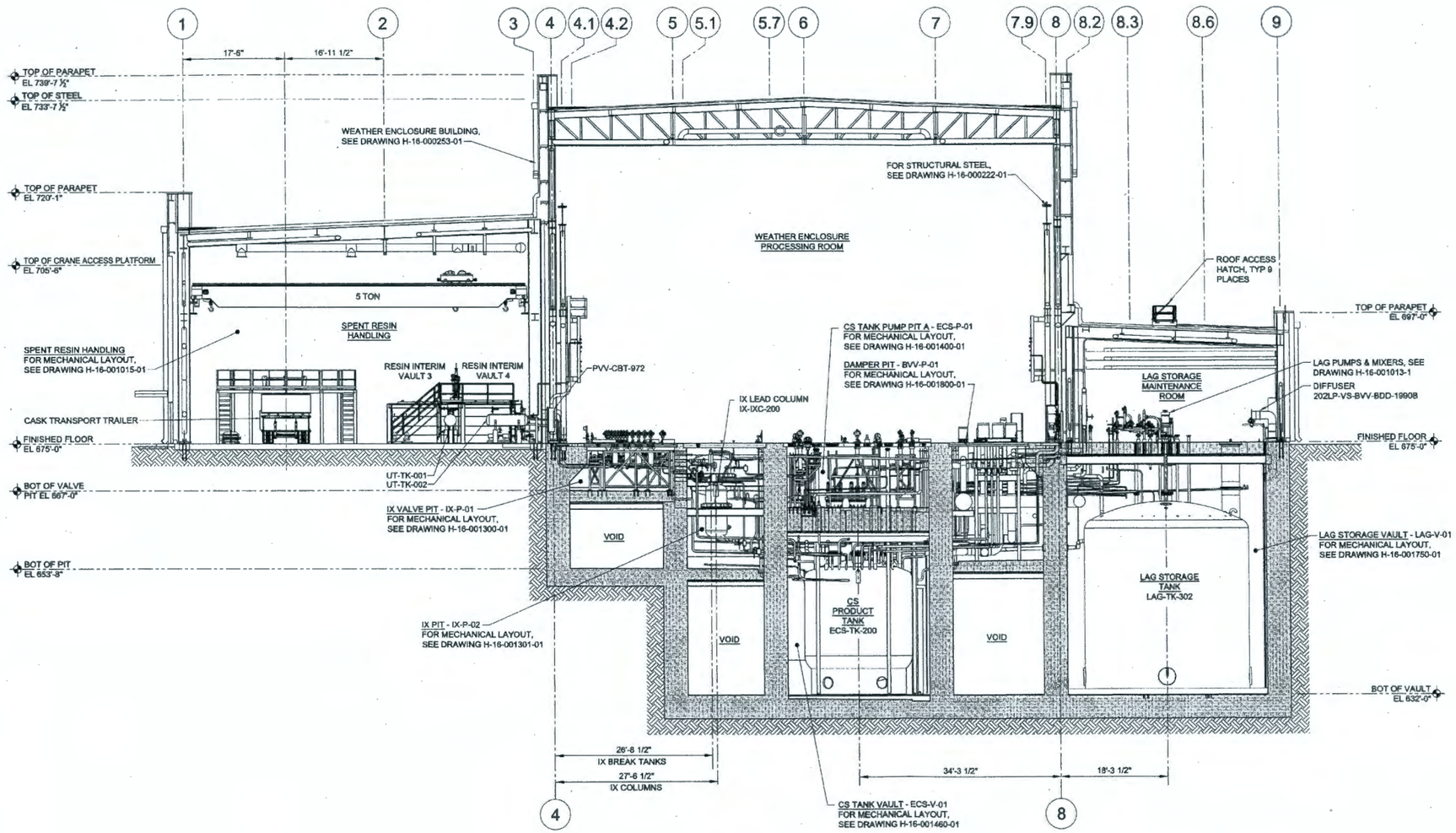

SECTION B
SCALE : 1/8"=1'-0" H-16-001005

ONLY FOR PROCESS EQUIPMENT LOCATIONS FOR PERMITTING

4' 0 4' 8' 12'
SCALE: 1/8" = 1'-0"

ISSUED FOR PERMITTING
NOT FOR CONSTRUCTION

REVISION APPROVAL RECORD				REV C	
DISCIPLINE	BY	DATE	DISCIPLINE	BY	DATE
ARCH.	SVW	5/16/17	MECHANICAL	DS	5/16/17
BUILDING SERVICES	N/A	N/A	PIPING	MJ	5/16/17
CIVIL	MM	5/16/17	PROCESS	MW	5/16/17
ELECTRICAL	LC	5/16/17	QA / QC	PB	5/16/17
ENVIRON.	N/A	N/A	STRUCTURAL	SF	5/16/17
GEN. ARRANG.	N/A	N/A	CONSTRUCTION	DM	5/16/17
I & C	HF	5/16/17	FIRE PROT.	KB	5/16/17
HVAC	WL	5/16/17			

DRAWING STATUS				
ISSUED	REV	DATE	SDE	PEM
PRELIMINARY	C	5/16/17	DS	DP

NOT APPROVED FOR CONSTRUCTION UNLESS SIGNED AND DATED. DESTROY ALL PRINTS BEARING EARLIER DATE AND/OR REV NO.

AECOM
URS ENERGY & CONSTRUCTION Inc. - an AECOM Company
ATKINS
AREVA

AECOM PROJECT NO.: 31269

DWG NUMBER	TITLE

DRAWING TRACEABILITY LIST

REF NUMBER	TITLE

REFERENCES

NEXT USED ON H-16-001005-01

REV	DESCRIPTION	ORG	CHK	APVD	IDV	DATE
C	GENERAL REVISION - ISSUED FOR PERMITTING	DBJ	RC	DS	N/A	5/16/17
B	GENERAL REVISION - ISSUED FOR 60% DESIGN REVIEW	DBJ	RC	DS	N/A	1/23/17
A	APPROVED FOR 30% DESIGN REVIEW	DBJ	RC	DS	N/A	11/2/15

REVISIONS

BLDG. NO. 202LP

INDEX NO. 0801

CAUTION
NOT COMPLETE WITHOUT CURRENT CHANGE DOCUMENTS FROM DATABASE

ATTENTION
DESTROY THIS DOCUMENT BY SHREDDING MAY CONTAIN SENSITIVE INFORMATION

NAME	DATE
DRAWN BY	
DESIGN APPROVAL	
DESIGN ENGINEER	
ENGINEER	

U.S. DEPARTMENT OF ENERGY
Office of River Protection

LAWPS
EQUIPMENT GENERAL ARRANGEMENT
SECTION B

SIZE F | DRAWING NUMBER H-16-001051 | SHEET 1 | REV C

SCALE SHOWN

PLOTID

DOE_T9_F.DWG (NOV 2015)

DRAWING

H-16-001052

LAWPS EQUIPMENT GENERAL ARRANGEMENT - SECTION C

NOTES:

1. FOR GENERAL NOTES SEE DRAWING H-16-001005-01.

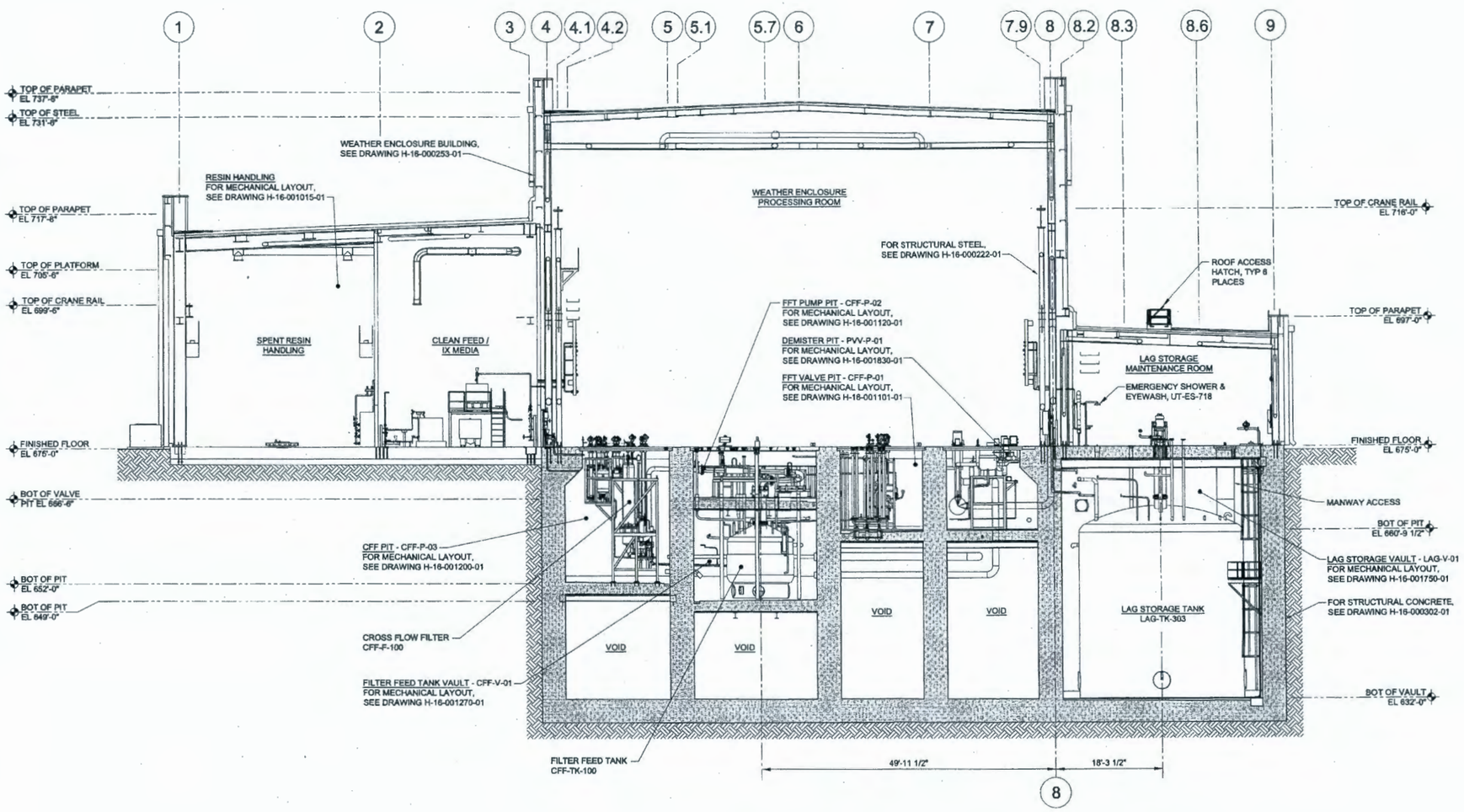

SECTION C
SCALE : 1/8"=1'-0" H-16-001005

Only for Process Equipment Locations For Permitting LBU 5/16/17

4' 0 4' 8' 12'
SCALE: 1/8" = 1'-0"

ISSUED FOR PERMITTING NOT FOR CONSTRUCTION

REVISION APPROVAL RECORD				REV C	
DISCIPLINE	BY	DATE	DISCIPLINE	BY	DATE
ARCH.	SVW	5/16/17	MECHANICAL	DS	5/16/17
BUILDING SERVICES	N/A	N/A	PIPING	MJ	5/16/17
CIVIL	MM	5/16/17	PROCESS	MW	5/16/17
ELECTRICAL	LC	5/16/17	QA / QC	PB	5/16/17
ENVIRON.	N/A	N/A	STRUCTURAL	SF	5/16/17
GEN. ARRANG.	N/A	N/A	CONSTRUCTION	DM	5/16/17
I & C	HF	5/16/17	FIRE PROT.	KB	5/16/17
HVAC	WL	5/16/17			

DRAWING STATUS				
ISSUED	REV	DATE	SDE	PEM
PRELIMINARY	C	5/18/17	DS	DP

NOT APPROVED FOR CONSTRUCTION UNLESS SIGNED AND DATED. DESTROY ALL PRINTS BEARING EARLIER DATE AND/OR REV NO.

AECOM
URS ENERGY & CONSTRUCTION Inc. - an AECOM Company
ATKINS
AREVA
AECOM PROJECT NO.: 31269

DWG NUMBER	TITLE
DRAWING TRACEABILITY LIST	

REF NUMBER	TITLE
REFERENCES	
NEXT USED ON	H-16-001005-01

REV	DESCRIPTION	ORG	CHK	APVD	IDV	DATE
C	GENERAL REVISION - ISSUED FOR PERMITTING	DBJ	RC	DS	N/A	5/16/17
B	GENERAL REVISION - ISSUED FOR 60% DESIGN REVIEW	DBJ	RC	DS	N/A	1/23/17
A	APPROVED FOR 30% DESIGN REVIEW	DBJ	RC	DS	N/A	11/2/15

REVISIONS

BLDG. NO. 202LP
INDEX NO. 0801

CAUTION
NOT COMPLETE WITHOUT CURRENT CHANGE DOCUMENTS FROM DATABASE

ATTENTION
DESTROY THIS DOCUMENT BY SHREDDING MAY CONTAIN SENSITIVE INFORMATION

NAME	DATE	COMPANY
DRAWN BY		
DISCIPLINE ENGINEER		
DISCIPLINE LEADER		
ENGINEER		

U.S. DEPARTMENT OF ENERGY
Office of River Protection

LAWPS
EQUIPMENT GENERAL ARRANGEMENT
SECTION C

SIZE F | DRAWING NUMBER H-16-001052 | SHEET 1 | REV C
SCALE SHOWN
PLOTTED

DRAWING

H-16-001053

LAWPS EQUIPMENT GENERAL ARRANGEMENT - SECTION D

NOTES:

1. FOR GENERAL NOTES SEE DRAWING H-16-001005-01.

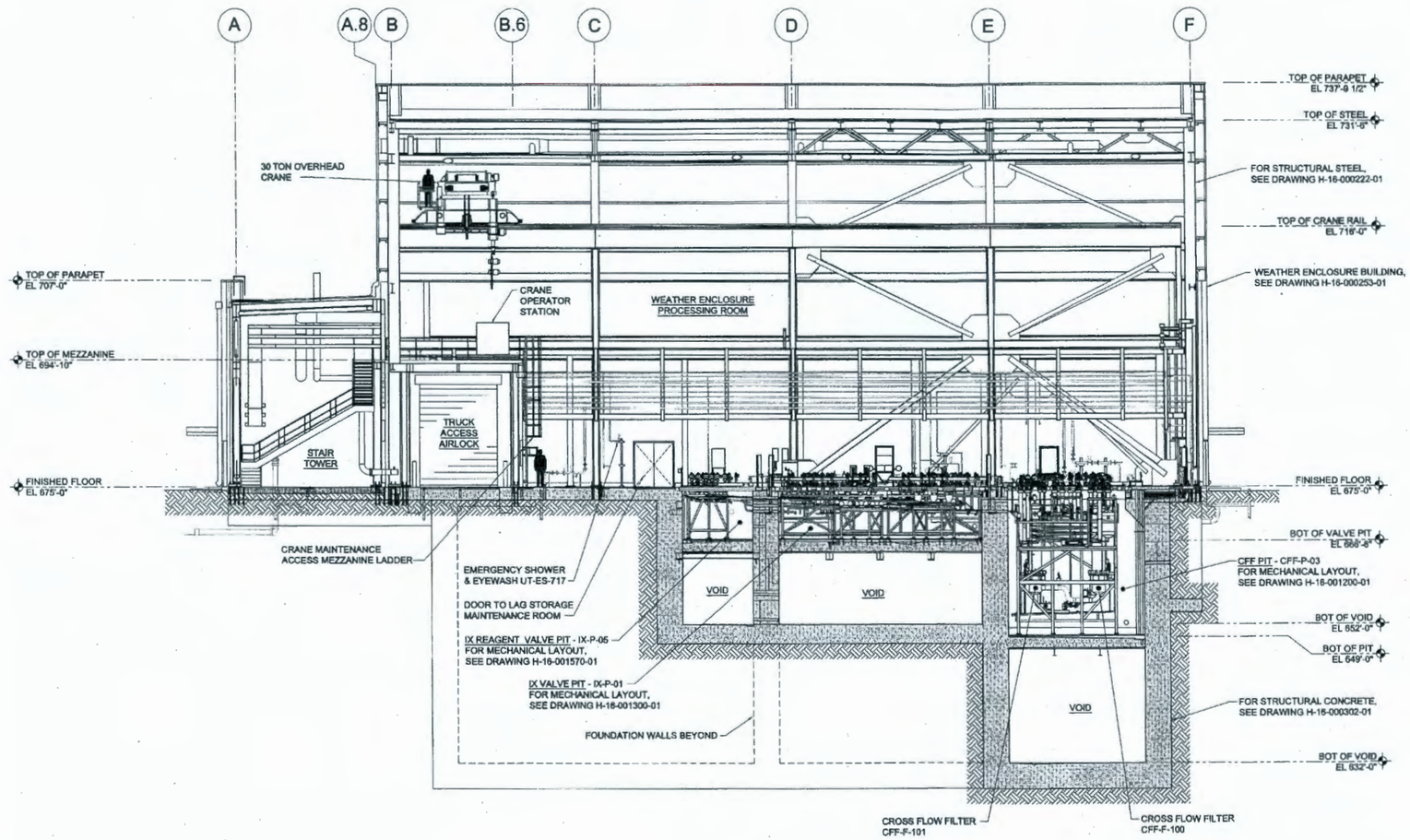

SECTION D
SCALE : 1/8"=1'-0" H-16-001005

ONLY FOR PROCESS EQUIPMENT LOCATIONS FOR PERMITTING

4' 0 4' 8' 12'
SCALE: 1/8" = 1'-0"

ISSUED FOR PERMITTING NOT FOR CONSTRUCTION

REV	DESCRIPTION	ORG	CHK	APVD	IDV	DATE
C	GENERAL REVISION - ISSUED FOR PERMITTING	DBJ	RC	DS	N/A	5/16/17
B	GENERAL REVISION - ISSUED FOR 60% DESIGN REVIEW	DBJ	RC	DS	N/A	1/23/17
A	APPROVED FOR 30% DESIGN REVIEW	DBJ	RC	DS	N/A	11/2/15

REVISIONS

REV NO.	DESCRIPTION

REF NUMBER	TITLE

REFERENCES

NEXT USED ON H-16-001005-01

DWG NUMBER	TITLE

DRAWING TRACEABILITY LIST

BLDG NO. 202LP

SHEET NO. 0801

CAUTION
NOT COMPLETE WITHOUT CURRENT CHANGE DOCUMENTS FROM DATABASE

ATTENTION
DESTROY THIS DOCUMENT BY SHREDDING MAY CONTAIN SENSITIVE INFORMATION

NAME	DATE	COMPANY
DRAWN BY		
DISCIPLINE APPROVAL		
DISCIPLINE ENGINEER		
PROJECT		

U.S. DEPARTMENT OF ENERGY
Office of River Protection

LAWPS
EQUIPMENT GENERAL ARRANGEMENT
SECTION D

SIZE F | DRAWING NUMBER H-16-001053 | SHEET 1 | REV C

SCALE SHOWN

PLOTID

REVISION APPROVAL RECORD					REV C
DISCIPLINE	BY	DATE	DISCIPLINE	BY	DATE
ARCH.	SVW	5/16/17	MECHANICAL	DS	5/16/17
BUILDING SERVICES	N/A	N/A	PIPING	MJ	5/16/17
CIVIL	MM	5/16/17	PROCESS	MW	5/16/17
ELECTRICAL	LC	5/16/17	QA / QC	PB	5/16/17
ENVIRON.	N/A	N/A	STRUCTURAL	SF	5/16/17
GEN. ARRANG.	N/A	N/A	CONSTRUCTION	DM	5/16/17
I & C	HF	5/16/17	FIRE PROT.	KB	5/16/17
HVAC	WL	5/16/17			

DRAWING STATUS				
ISSUED	REV	DATE	SDE	PEM
PRELIMINARY	C	5/16/17	DS	DP

NOT APPROVED FOR CONSTRUCTION UNLESS SIGNED AND DATED. DESTROY ALL PRINTS BEARING EARLIER DATE AND/OR REV.NO.

AECOM
URS ENERGY & CONSTRUCTION Inc. - an AECOM Company
ATKINS
AREVA

AECOM PROJECT NO.: 31269

DRAWING

H-16-001054

LAWPS EQUIPMENT GENERAL ARRANGEMENT – SECTION E

NOTES:

1. FOR GENERAL NOTES SEE DRAWING H-16-001005-01.

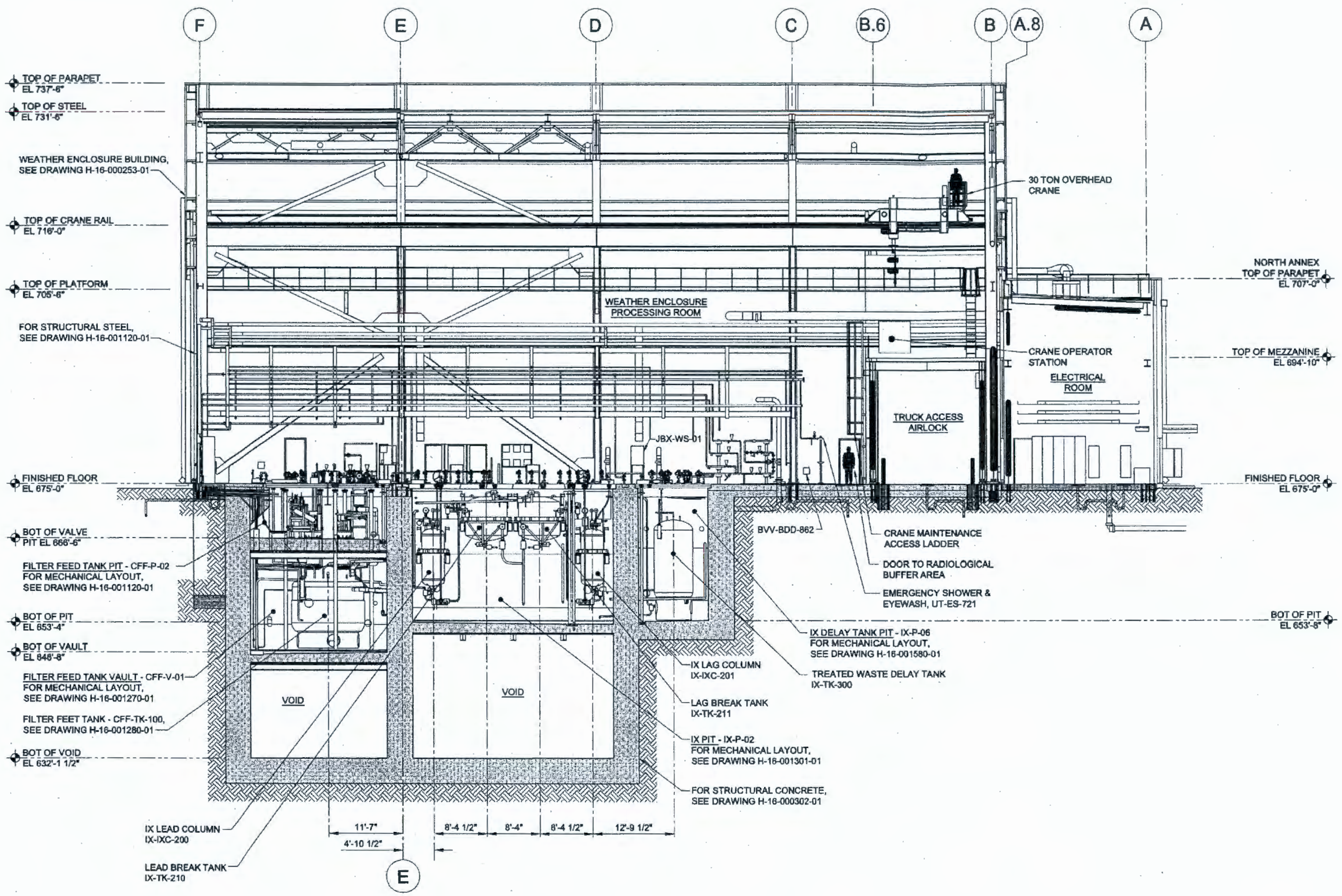

SECTION E
SCALE : 1/8"=1'-0"
H-16-001005

LARRY E. ULBRICHT STATE OF WASHINGTON 27921 REGISTERED PROFESSIONAL ENGINEER

ONLY FOR PROCESS EQUIPMENT LOCATIONS FOR PERMITTING [illegible]

4' 0 4' 8' 12'
SCALE: 1/8" = 1'-0"

ISSUED FOR PERMITTING
NOT FOR CONSTRUCTION

REVISION APPROVAL RECORD				REV C	
DISCIPLINE	BY	DATE	DISCIPLINE	BY	DATE
ARCH.	SVW	5/16/17	MECHANICAL	DS	5/16/17
BUILDING SERVICES	N/A	N/A	PIPING	MJ	5/16/17
CIVIL	MM	5/16/17	PROCESS	MW	5/16/17
ELECTRICAL	LC	5/16/17	QA / QC	PB	5/16/17
ENVIRON.	N/A	N/A	STRUCTURAL	SF	5/16/17
GEN. ARRANG.	N/A	N/A	CONSTRUCTION	DM	5/16/17
I & C	HF	5/16/17	FIRE PROT.	KB	5/16/17
HVAC	WL	5/16/17	-		

DRAWING STATUS				
ISSUED	REV	DATE	SDE	PEM
PRELIMINARY	C	5/16/17	DS	DP

NOT APPROVED FOR CONSTRUCTION UNLESS SIGNED AND DATED. DESTROY ALL PRINTS BEARING EARLIER DATE AND/OR REV.NO.

AECOM
URS ENERGY & CONSTRUCTION Inc. - an AECOM Company
ATKINS
AREVA
AECOM PROJECT NO.: 31269

DWG NUMBER	TITLE
DRAWING TRACEABILITY LIST	

REF NUMBER	TITLE
REFERENCES	
NEXT USED ON	H-16-001005-01

REV	DESCRIPTION	ORG	CHK	APVD	IDV	DATE
C	GENERAL REVISION - ISSUED FOR PERMITTING	DBJ	RC	DS	N/A	5/16/17
B	GENERAL REVISION - ISSUED FOR 60% DESIGN REVIEW	DBJ	RC	DS	N/A	1/23/17
A	APPROVED FOR 30% DESIGN REVIEW	DBJ	RC	DS	N/A	11/2/15

REVISIONS

BLDG. NO. 202LP
INDEX NO. 0801

CAUTION
NOT COMPLETE WITHOUT CURRENT CHANGE DOCUMENTS FROM DATABASE

ATTENTION
DESTROY THIS DOCUMENT BY SHREDDING MAY CONTAIN SENSITIVE INFORMATION

NAME | DATE | COMPANY
DRAWN BY
DRAFTING APPROVAL
DISCIPLINE ENGINEER
ENGINEER

U.S. DEPARTMENT OF ENERGY
Office of River Protection

LAWPS
EQUIPMENT GENERAL ARRANGEMENT
SECTION E

SIZE F | DRAWING NUMBER H-16-001054 | SHEET 1 | REV C
SCALE SYSTEM
PLOTID
DOE_TB_F.DWG (NOV 2010)

DRAWING

H-16-001055

LAWPS EQUIPMENT GENERAL ARRANGEMENT – SECTION F

NOTES:

1. FOR GENERAL NOTES SEE DRAWING H-16-001005-01.

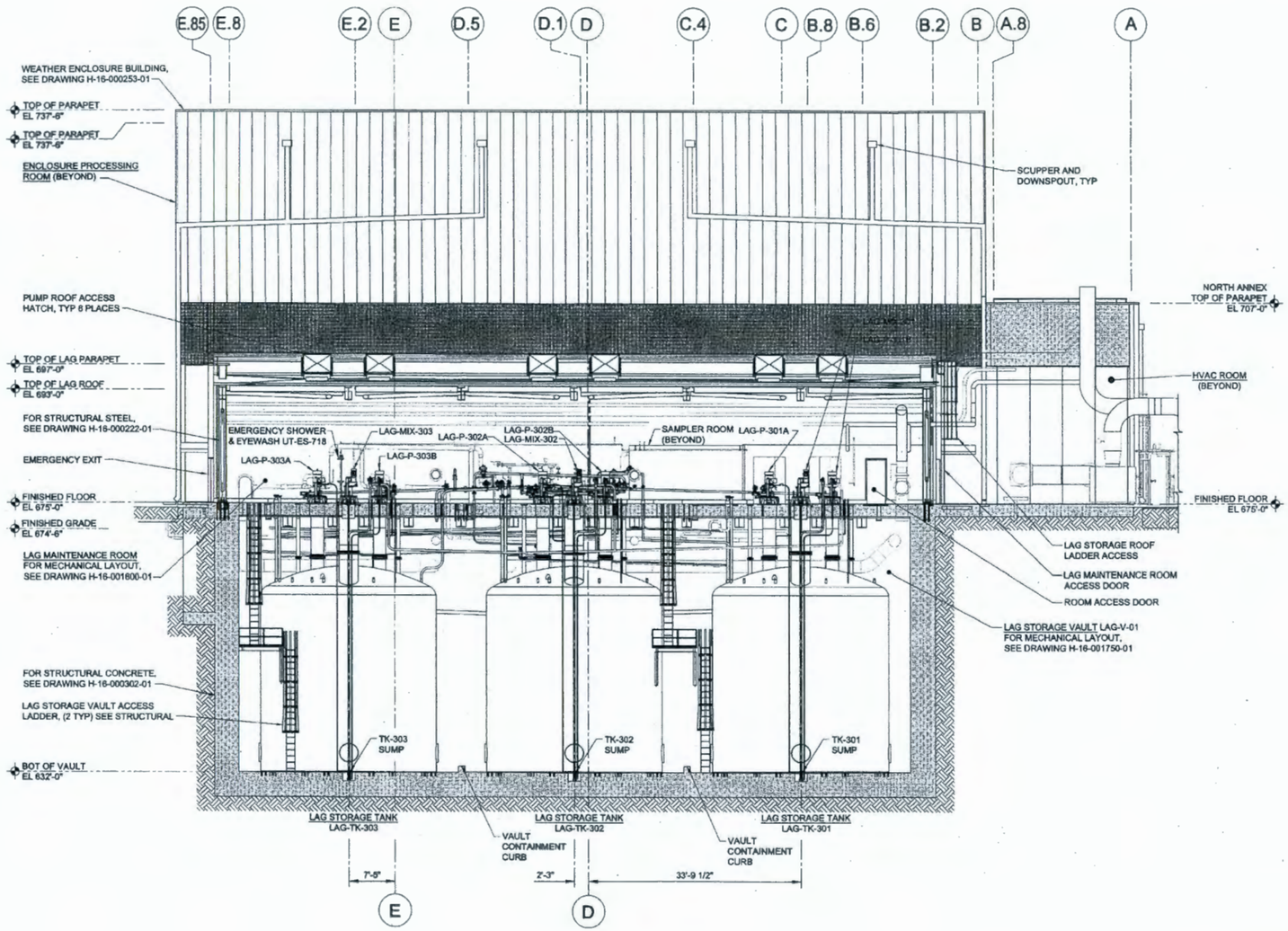

SECTION F

SCALE : 1/8"=1'-0" H-16-001005

ONLY FOR PROCESS EQUIPMENT LOCATIONS FOR PERMITTING JEEL 5/16/17

4' 0 4' 8' 12'

SCALE: 1/8" = 1'-0"

ISSUED FOR PERMITTING
NOT FOR CONSTRUCTION

REVISION APPROVAL RECORD					REV C
DISCIPLINE	BY	DATE	DISCIPLINE	BY	DATE
ARCH.	SVW	5/16/17	MECHANICAL	DS	5/16/17
BUILDING SERVICES	N/A	N/A	PIPING	MJ	5/16/17
CIVIL	MM	5/16/17	PROCESS	MW	5/16/17
ELECTRICAL	LC	5/16/17	QA / QC	PB	5/16/17
ENVIRON.	N/A	N/A	STRUCTURAL	SF	5/16/17
GEN. ARRANG.	N/A	N/A	CONSTRUCTION	DM	5/16/17
I & C	HF	5/16/17	FIRE PROT.	KB	5/16/17
HVAC	WL	5/16/17			

DRAWING STATUS				
ISSUED	REV	DATE	SDE	PEM
PRELIMINARY	C	5/16/17	DS	DP

NOT APPROVED FOR CONSTRUCTION UNLESS SIGNED AND DATED. DESTROY ALL PRINTS BEARING EARLIER DATE AND/OR REV NO.

AECOM

URS ENERGY & CONSTRUCTION Inc. - an AECOM Company

ATKINS

AREVA

AECOM PROJECT NO.: 31269

DWG NUMBER	TITLE	REF NUMBER	TITLE

DRAWING TRACEABILITY LIST

REFERENCES

NEXT USED ON H-16-001005-01

REV	DESCRIPTION	ORG	CHK	APVD	IDV	DATE
C	GENERAL REVISION - ISSUED FOR PERMITTING	DBJ	RC	DS	N/A	5/16/17
B	GENERAL REVISION - ISSUED FOR 60% DESIGN REVIEW	DBJ	RC	DS	N/A	1/23/17
A	APPROVED FOR 30% DESIGN REVIEW	DBJ	RC	DS	N/A	11/2/15

REVISIONS

BLDG. NO. 202LP

SERIES NO. 0801

CAUTION
NOT COMPLETE WITHOUT CURRENT CHANGE DOCUMENTS FROM DATABASE

ATTENTION
DESTROY THIS DOCUMENT BY SHREDDING MAY CONTAIN SENSITIVE INFORMATION

NAME	DATE	COMPANY
DRAWN BY		
DISCIPLINE APPROVAL		
DISCIPLINE SUPERVISOR		
ENGINEER		

U.S. DEPARTMENT OF ENERGY
Office of River Protection

LAWPS
EQUIPMENT GENERAL ARRANGEMENT
SECTION F

SIZE F | DRAWING NUMBER H-16-001055 | SHEET 1 | REV C

SCALE SHOWN

PLOTTED

DGN. TO F DWG (NOV 2016)

Design Proposal Drawings (DPDs) and Professional Engineering Stamps

Note: The following DPDs are presented in numeric order, which differ from that presented in the P.E. Stamp Tables.

Drawing Number	Revision
H-16-001900-01	1
H-16-001900-02	0
H-16-001901-01	1
H-16-001902-01	1
H-16-001903-01	0
H-16-001908-01	0
H-16-001121-01	0
H-16-001131-01	0
H-16-001136-01	0
H-16-001137-01	0
H-16-001201-01	0
H-16-001201-02	0
H-16-001202-01	0
H-16-001202-02	0
H-16-001202-03	0
H-16-001203-01	0
H-16-001203-02	0
H-16-001203-03	0
H-16-001204-01	0
H-16-001205-01	0
H-16-001206-01	0
H-16-001206-02	0
H-16-001206-03	0
H-16-001207-01	0
H-16-001275-01	0
H-16-001275-02	0
H-16-001275-03	0
H-16-001275-04	0

BRIAN DENNIS SEVERSON
STATE OF WASHINGTON
53874
REGISTERED
PROFESSIONAL ENGINEER
5/15/17

FOR PERMITTING
BDS 5/15/17

Drawing Number	Revision
H-16-001920-01	0
H-16-001924-01	0
H-16-001924-02	0
H-16-001925-01	0
H-16-001926-01	0
H-16-001927-01	0
H-16-001928-01	0
H-16-001311-01	0
H-16-001311-02	0
H-16-001312-01	0
H-16-001208-01	0
H-16-001209-01	0
H-16-001210-01	0
H-16-001211-01	0
H-16-001211-02	0
H-16-001211-03	0
H-16-001212-01	0
H-16-001212-02	0
H-16-001213-01	0
H-16-001213-02	0
H-16-001280-01	0
H-16-001280-02	0
H-16-001280-03	0
H-16-001280-04	0
H-16-001280-05	0
H-16-001280-06	0

LARRY B. ULBRICHT
STATE OF WASHINGTON
27921
REGISTERED
PROFESSIONAL ENGINEER
5/15/17

FOR PERMITTING
LBU/5/15/17

DRAWING

H-16-001121

FILTER FEED PUMP CFF-P-103 ASSEMBLY DPD

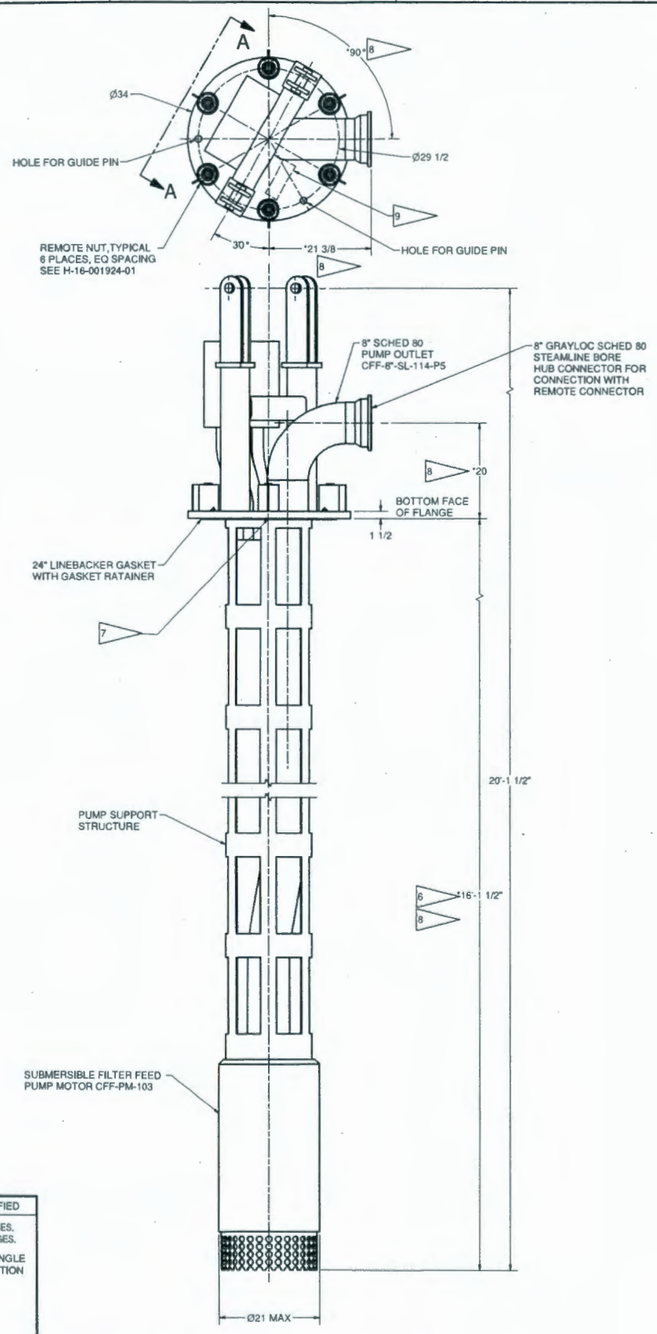

FILTER FEED PUMP CFF-P-103 ASSEMBLY DPD
SCALE 1/12

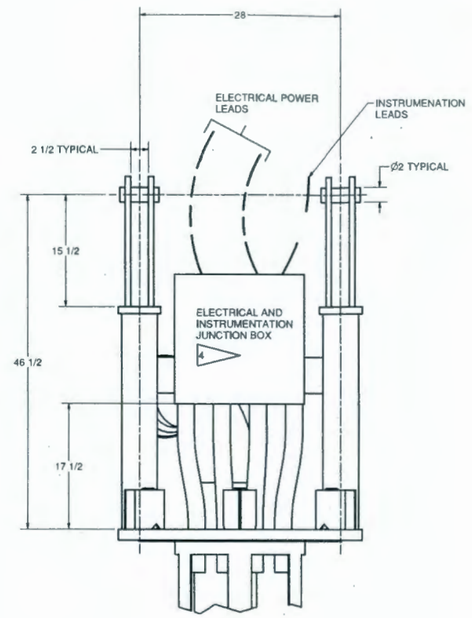

VIEW A-A
SCALE 1/8

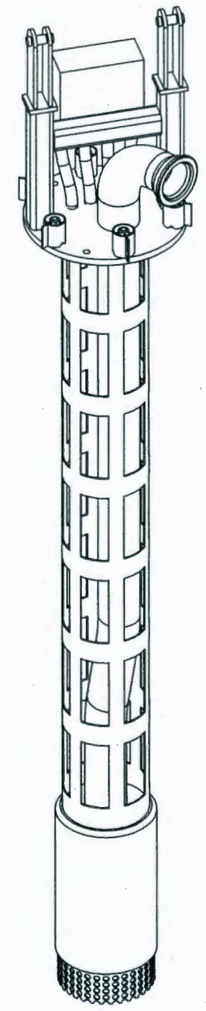

GENERAL NOTES:

1. DIMENSIONS AND TOLERANCES ARE IN ACCORDANCE WITH ASME Y14.5M-1994.
2. FABRICATION SHALL BE IN ACCORDANCE WITH CROSS FLOW FILTER PROCUREMENT SPECIFICATION 15-2-001 AND DATA SHEET 202LP-FFA-CFF-P-103.
3. APPROXIMATE WEIGHT OF ASSEMBLY 6,000 LBS.
4. TWO JUNCTION BOXES WILL BE REQUIRED, ONE FOR POWER AND ONE FOR INSTRUMENTATION. CABLE MANAGEMENT TO BE FINALIZED DURING DESIGN.
5. PUMPS ARE FQA. FOR DETAILED SAFETY CHARACTERISTICS SEE SPECIFICATION 15-2-001 SECTION 3.5.1, TABLE 3-3 PROCESS PUMPS.
6. PUMP INSERTION LENGTH SHALL BE AS REQUIRED TO INTERFACE WITH THE FFT TANK AS SHOWN ON DWG H-16-001275.
7. MAXIMUM LOADS TO BE VERIFIED BY VENDOR. THE FOLLOWING LOADS ARE PRELIMINARY LOADS PROVIDED BY THE BUYER:

   FORCE AXIAL = 4,900 LBS
   FORCE VERTICAL = 850 LBS
   FORCE LATERAL = 1,850 LBS

   MOMENT TORSION = 3,300 FT-LBS
   MOMENT VERTICAL = 6,250 FT-LBS
   MOVMENT LATERAL = 6,300 FT-LBS
8. GRAYLOC NOZZLE POSITION AND THE LENGTH OF THE PUMP ASSEMLBY ARE CRITICAL TO REPLACEMENT. VENDOR TO RECORD THE * DIMENSIONS FOR THE CRITICAL DIMENSION RECORD.
9. LABEL PUMP ASSEMBLY AND COMPONENTS IN ACCORDANCE WITH SPECIFICATION 15-2-001.

UNLESS OTHERWISE SPECIFIED
ALL DIMENSIONS ARE IN INCHES.
REMOVE BURRS & SHARP EDGES.
THIRD ANGLE PROJECTION
TOLERANCES
.X = ±.1
.XX = ±.01
.XXX = ±.005
.XXX = ±1/16
ANGLE = ±.5 DEG
MACHINED SURFACES 125
MACHINED INSIDE
RADII = .04 ±.02

REVISION APPROVAL RECORD				REV 0	
DISCIPLINE	BY	DATE	DISCIPLINE	BY	DATE
ARCH.	SF	9/19/16	MECHANICAL	DS	9/19/16
BUILDING SERVICES	N/A	N/A	PIPING	MJ	9/19/16
CIVIL	SF	9/19/16	PROCESS	MW	9/19/16
ELECTRICAL	CF	9/19/16	QA / QC	PB	9/19/16
ENVIRON.	N/A	N/A	STRUCTURAL	SF	9/19/16
GEN. ARRANG.	DJ	9/19/16			
I & C	HF	9/19/16			
HVAC	WL	9/19/16			

DRAWING STATUS				
ISSUED	REV	DATE	SDE	PEM
APPROVED FOR BID	0	9/19/16	DS	BGA

NOT APPROVED FOR CONSTRUCTION UNLESS SIGNED AND DATED. DESTROY ALL PRINTS BEARING EARLIER DATE AND/OR REV.NO.

AECOM
URS ENERGY & CONSTRUCTION Inc. - an AECOM Company
ATKINS
AREVA
AECOM PROJECT NO.: 31269

DWG NUMBER	TITLE
	DRAWING TRACEABILITY LIST

REF NUMBER	TITLE
	REFERENCES
NEXT USED ON	H-16-001275-01

APROVED FOR BID
NOT FOR CONSTRUCTION

REV	DESCRIPTION	ORG	CHK	APVD	IDV	DATE
0	APPROVED FOR BID	RC	DJ	DS	DKC	9/19/16

REVISIONS

BLDG. NO. 202LP
INDEX NO. 8405 8409

CAUTION
NOT COMPLETE WITHOUT CURRENT CHANGE DOCUMENTS FROM DATABASE

ATTENTION
DESTROY THIS DOCUMENT BY SHREDDING MAY CONTAIN SENSITIVE INFORMATION

NAME	DATE
DRAWN BY	
DRAFTING APPROVAL	
DESIGN ENGINEER	
ENGINEER	

U.S. DEPARTMENT OF ENERGY
Office of River Protection

LAWPS
FILTER FEED PUMP
CFF-P-103 ASSEMBLY DPD

SIZE F | DRAWING NUMBER H-16-001121 | SHEET 1 | REV 0
SCALE NOTED
PLOTTED

DRAWING

H-16-001131

DST RETURN PUMP CFF-P-102 ASSEMBLY DPD

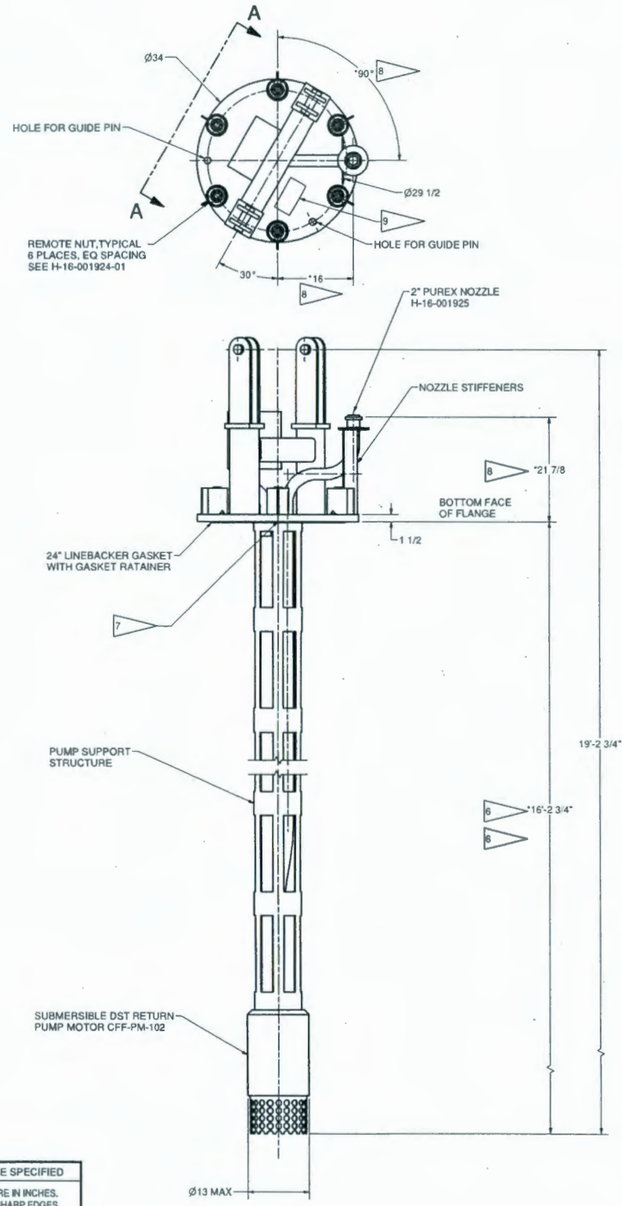

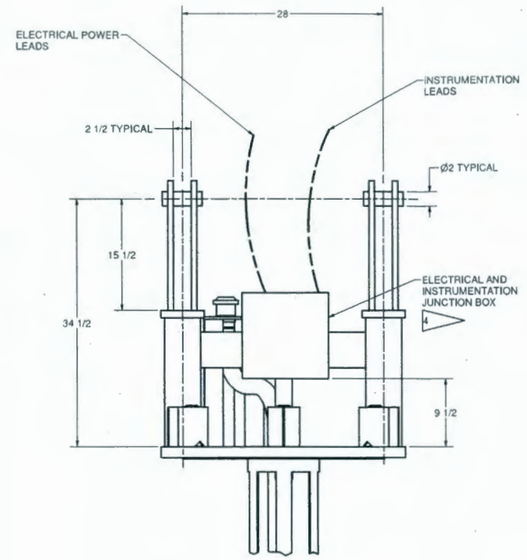

VIEW A-A
SCALE 1/8

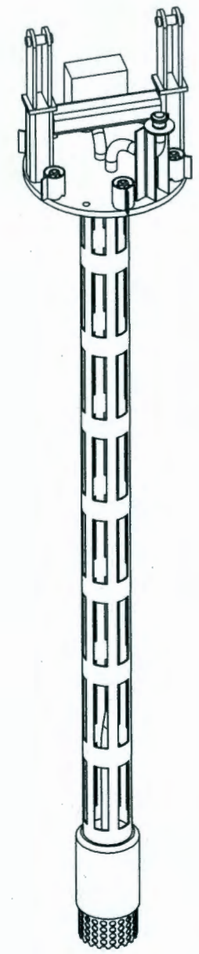

GENERAL NOTES:

1. DIMENSIONS AND TOLERANCES ARE IN ACCORDANCE WITH ASME Y14.5M-1994.
2. FABRICATION SHALL BE IN ACCORDANCE WITH CROSS FLOW FILTER PROCUREMENT SPECIFICATION 15-2-001 AND DATA SHEET 202LP-FFA-CFF-P-102.
3. APPROXIMATE WEIGHT OF ASSEMBLY 3,000 LBS.
4. TWO JUNCTION BOXES WILL BE REQUIRED, ONE FOR POWER AND ONE FOR INSTRUMENTATION
5. PUMPS ARE FQA. FOR DETAILED SAFETY CHARACTERISTICS SEE SPECIFICATION 15-2-001 SECTION 3.5.1, TABLE 3-3 PROCESS PUMPS.
6. PUMP INSERTION LENGTH SHALL BE AS REQUIRED TO INTERFACE WITH THE FFT TANK AS SHOWN ON DWG H-16-001275.
7. MAXIMUM LOADS TO BE VERIFIED BY VENDOR. THE FOLLOWING LOADS ARE PRELIMINARY LOADS PROVIDED BY THE BUYER:

   FORCE AXIAL = 4,900 LBS
   FORCE VERTICAL = 850 LBS
   FORCE LATERAL = 1,850 LBS

   MOMENT TORSION = 3,300 FT-LBS
   MOMENT VERTICAL = 6,250 FT-LBS
   MOVMENT LATERAL = 6,300 FT-LBS
8. GRAYLOC NOZZLE POSITION AND THE LENGTH OF THE PUMP ASSEMLBY ARE CRITICAL TO REPLACEMENT. VENDOR TO RECORD THE * DIMENSIONS FOR THE CRITICAL DIMENSION RECORD.
9. LABEL PUMP ASSEMBLY AND COMPONENTS IN ACCORDANCE WITH SPECIFICATION 15-2-001.

UNLESS OTHERWISE SPECIFIED

ALL DIMENSIONS ARE IN INCHES.
REMOVE BURRS & SHARP EDGES.

THIRD ANGLE PROJECTION

TOLERANCES
.X = ±.1
.XX = ±.01
.XXX = ±.005
X/XX = ±1/16
ANGLE = ±.5 DEG
MACHINED SURFACES 125
MACHINED INSIDE
RADII = .04 ±.02

DST RETURN PUMP CFF-P-102 ASSEMBLY DPD

SCALE 1/12

REVISION APPROVAL RECORD					REV 0
DISCIPLINE	BY	DATE	DISCIPLINE	BY	DATE
ARCH.	SF	9/19/16	MECHANICAL	DS	9/19/16
BUILDING SERVICES	N/A	N/A	PIPING	MJ	9/19/16
CIVIL	SF	9/19/16	PROCESS	MW	9/19/16
ELECTRICAL	CF	9/19/16	QA / QC	PB	9/19/16
ENVIRON.	N/A	N/A	STRUCTURAL	SF	9/19/16
GEN. ARRANG.	DJ	9/19/16			
I & C	HF	9/19/16			
HVAC	WL	9/19/16			

DRAWING STATUS				
ISSUED	REV	DATE	SDE	PEM
APPROVED FOR BID	0	9/19/16	DS	BGA

NOT APPROVED FOR CONSTRUCTION UNLESS SIGNED AND DATED. DESTROY ALL PRINTS BEARING EARLIER DATE AND/OR REV NO.

AECOM
URS ENERGY & CONSTRUCTION Inc. - an AECOM Company
ATKINS
AREVA

AECOM PROJECT NO.: 31269

DWG NUMBER	TITLE
DRAWING TRACEABILITY LIST	

REF NUMBER	TITLE
REFERENCES	
NEXT USED ON	H-16-001275-01

APROVED FOR BID
NOT FOR CONSTRUCTION

REV	DESCRIPTION	ORG	CHK	APVD	IDV	DATE
0	APPROVED FOR BID	RC	DJ	DS	DKC	9/19/16

REVISIONS

BLDG. NO. 202LP

INDEX NO. 8405 8409

CAUTION
NOT COMPLETE WITHOUT CURRENT CHANGE DOCUMENTS FROM DATABASE

ATTENTION
DESTROY THIS DOCUMENT BY SHREDDING MAY CONTAIN SENSITIVE INFORMATION

NAME	DATE	COMPANY
DRAWN BY		
CHECKED/APPROVAL		
DISCIPLINE ENGINEER		
ENGINEER		

U.S. DEPARTMENT OF ENERGY
Office of River Protection

LAWPS
DST RETURN PUMP
CFF-P-102 ASSEMBLY DPD

SIZE	DRAWING NUMBER	SHEET	REV
F	H-16-001131	1	0

SCALE NOTED

PLOTID

8X11_TB_7 DWG NOV 2016

DRAWING

H-16-001136

202LP-CFA-CFF-PV-101 SUPPORT ASSEMBLY DPD

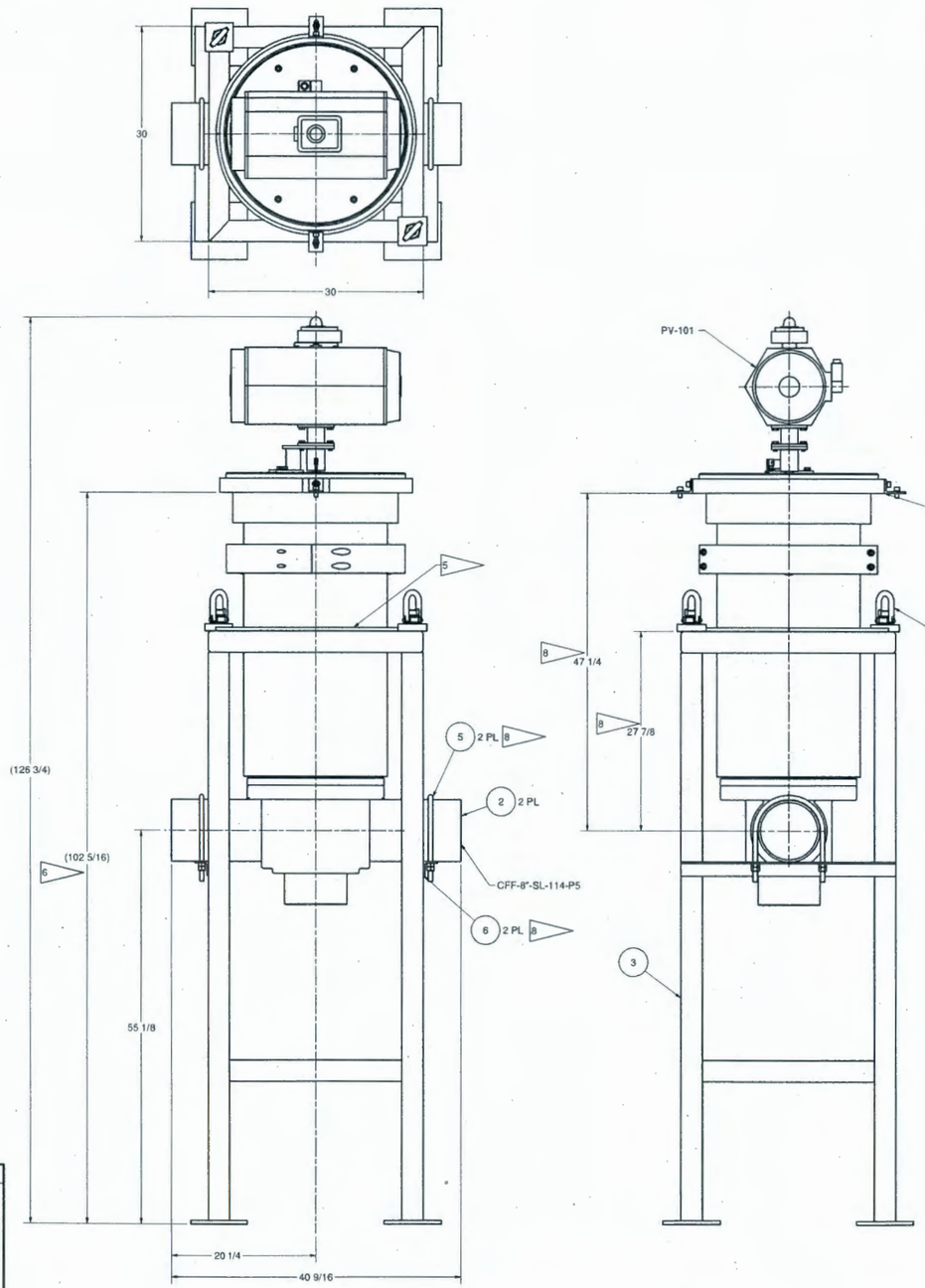

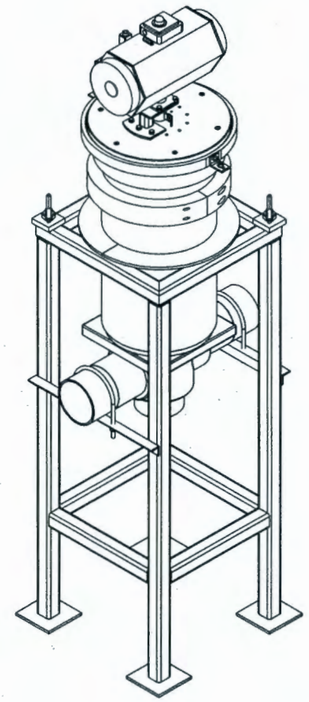

PARTS/MATERIAL LIST

QL	QTY	PART/DRAWING NUMBER	NOMENCLATURE/DESCRIPTION	MATERIAL/REFERENCE	SH	ITEM
FQA	1	H-16-001902-01	PRESSURE CONTROL VALVE, 202LP-CFA-CFF-PV-101	N/A	1	1
FQA	2	N/A	PIPE, 8 INCH, SCHED 80S	ASTM A312 TP 316L SST	1	2
FQA	1	H-16-001137-01	202LP-CFA-CFF-PV-101 FRAME ASSEMBLY DPD	N/A	1	3
CQA	2	(CL-2500-SHR-1-S)	SWIVEL HOIST RING, 3/4-10 UNC BOLT, 3500 LBS RATED LOAD, SST	(CARR-LANE)	1	4
CQA	2	(29605T14)	U-BOLT, 8 INCH PIPE, 5/8-11 THRD, WITH 4 NUTS, 304 SST	(MCMASTER-CARR)	1	5
CQA	2	N/A	ANGLE, 2 X 2 X 1/4 THICK	ASTM A276 304L SST	1	6

GENERAL NOTES:

1. DIMENSIONS AND TOLERANCES ARE IN ACCORDANCE WITH ASME Y14.5M-1994.
2. APPROXIMATE WEIGHT OF ASSEMBLY IS 2,118 LBS.
3. DESIGN AND FABRICATION SHALL BE IN ACCORDANCE WITH CROSS FLOW FILTER SYSTEM PROCUREMENT SPECIFICATION 15-2-001.
4. ALL MATERIAL SIZE AND THICKNESS SHOWN, EXCLUDING PROCESS PIPE, ARE REFERENCE ONLY. ACTUAL SIZE AND THICKNESS TO BE DETERMINED DURING DESIGN.

5 RING AROUND VALVE TO BE WELDED TO VALVE BODY DURING VALVE INSTALLATION INTO FRAME. SHIMMING WILL NOT BE REQUIRED BECAUSE EACH SUPPORT RING WILL BE INDIVIDUALLY LOCATED.

6 VALVE DIMENSIONS SHALL BE DETERMINED BY VALVE DPD DRAWING. ADJUST PIPING AS REQUIRED TO ENSURE CRITICAL DIMENSION FROM TOP OF FRAME TO TOP OF VALVE ASSEMBLY.

7 WHEN LIFTING ASSEMBLY VALVE ACUTATORS, SHIELD PLUGS, AND VALVE SHAFTS SHALL BE REMOVED.

8 VALVE BODY WILL BE SUPPORTED BY PIPING IN ACTUAL PIT INSTALLATION. THIS U-BOLT SUPPORT IS TEMPORARY TO ASSIST IN FABRICATION, SET UP, AND INSTALLATION. AFTER VALVE ASSEMBLY IS WELDED INTO POSITION THE U-BOLT AND THE ANGLE SUPPORT WILL BE REMOVED.

202LP-CFA-CFF-PV-101 SUPPORT ASSEMBLY DPD

SCALE 1 / 8

UNLESS OTHERWISE SPECIFIED
ALL DIMENSIONS ARE IN INCHES.
REMOVE BURRS & SHARP EDGES.
THIRD ANGLE PROJECTION
TOLERANCES
.X = ±.1
.XX = ±.01
.XXX = ±.005
X/XX = ±1/16
ANGLE = ±.5 DEG
MACHINED SURFACES 125
MACHINED INSIDE RADII = .04 ±.02

REVISION APPROVAL RECORD				REV 0	
DISCIPLINE	BY	DATE	DISCIPLINE	BY	DATE
ARCH.	SF	9/19/16	MECHANICAL	DS	9/19/16
BUILDING SERVICES	N/A	N/A	PIPING	MJ	9/19/16
CIVIL	SF	9/19/16	PROCESS	MW	9/19/16
ELECTRICAL	CF	9/19/16	QA / QC	PB	9/19/16
ENVIRON.	N/A	N/A	STRUCTURAL	SF	9/19/16
GEN. ARRANG.	DJ	9/19/16			
I & C	HF	9/19/16			
HVAC	WL	9/19/16			

DRAWING STATUS				
ISSUED	REV	DATE	SDE	PEM
APPROVED FOR BID	0	9/19/16	DS	BGA

NOT APPROVED FOR CONSTRUCTION UNLESS SIGNED AND DATED. DESTROY ALL PRINTS BEARING EARLIER DATE AND/OR REV.NO.

AECOM
URS ENERGY & CONSTRUCTION Inc. - an AECOM Company
ATKINS
AREVA

AECOM PROJECT NO.: 31269

DWG NUMBER	TITLE
DRAWING TRACEABILITY LIST	

REF NUMBER	TITLE
REFERENCES	
NEXT USED ON	H-16-001275-01

APROVED FOR BID
NOT FOR CONSTRUCTION

REV	DESCRIPTION	ORG	CHK	APVD	IDV	DATE
0	APPROVED FOR BID	RC	DJ	DS	DKC	9/19/16

REVISIONS

BLDG. NO. 202LP
INDEX NO. 8405 8409

CAUTION
NOT COMPLETE WITHOUT CURRENT CHANGE DOCUMENTS FROM DATABASE

ATTENTION
DESTROY THIS DOCUMENT BY SHREDDING MAY CONTAIN SENSITIVE INFORMATION

NAME	DATE	COMPANY
DRAWN BY		
DRAFTING APPROVAL		
DISCIPLINE ENGINEER		
ENGINEERING CHECKER		
DESIGN AUTHORITY		

U.S. DEPARTMENT OF ENERGY
Office of River Protection

LAWPS
202LP-CFA-CFF-PV-101
SUPPORT ASSEMBLY DPD

SIZE F | DRAWING NUMBER H-16-001136 | SHEET 1 | REV 0
SCALE NONE
PLOTTED

DRAWING

H-16-001137

202L-CFA-CFF-PV-101 FRAME ASSEMBLY DPD

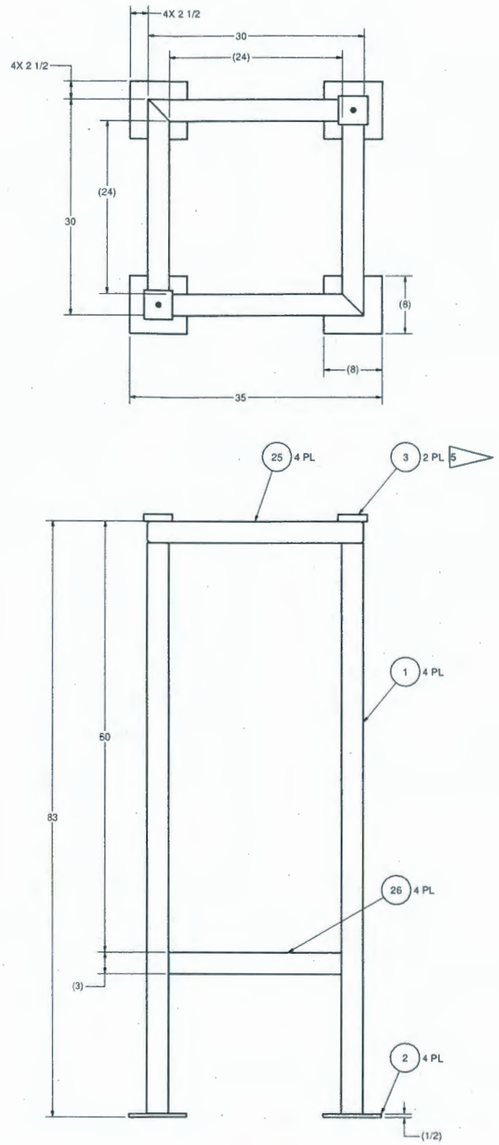

202LP-DFA-CFF-PV-101 FRAME ASSEMBLY DPD

SCALE 1/8

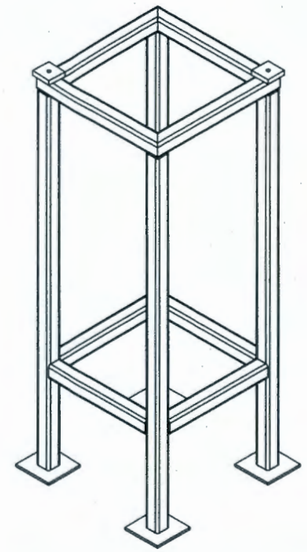

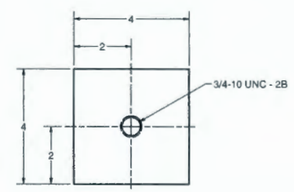

3 LIFTING BRACKET

SCALE: 1/2

PARTS/MATERIAL LIST

QL	QTY	PART/DRAWING NUMBER	NOMENCLATURE/DESCRIPTION	MATERIAL/REFERENCE	SH	ITEM
FQA	AR	N/A	HSS, 3 X 3 X 1/4	ASTM A554 304L SST	1	1
FQA	4	N/A	PLATE, 8 X 8 X 1/2 THICK	ASTM A240 304L SST	1	2
FQA	2	N/A	LIFTING BRACKET, 1 INCH THICK	ASTM A276 OR ASTM A240 304L SST	1	3

GENERAL NOTES:

1. DIMENSIONS AND TOLERANCES ARE IN ACCORDANCE WITH ASME Y14.5M-1994.
2. APPROXIMATE WEIGHT OF ASSEMBLY IS 413 LBS.
3. DESIGN AND FABRICATION SHALL BE IN ACCORDANCE WITH CROSS FLOW FILTER SYSTEM PROCUREMENT SPECIFICATION 15-2-001.
4. ALL MATERIAL SIZE AND THICKNESS SHOWN ARE REFERENCE ONLY. ACTUAL SIZE AND THICKNESS TO BE DETERMINED DURING DESIGN.

5 CENTER ON TUBE STEEL COLUMN.

UNLESS OTHERWISE SPECIFIED

ALL DIMENSIONS ARE IN INCHES. REMOVE BURRS & SHARP EDGES.

THIRD ANGLE PROJECTION

TOLERANCES
.X = ± .1
.XX = ± .01
.XXX = ± .005
X/XX = ± 1/16
ANGLE = ± .5 DEG
MACHINED SURFACES 125
MACHINED INSIDE RADII = .04 ±.02

REVISION APPROVAL RECORD				REV 0	
DISCIPLINE	BY	DATE	DISCIPLINE	BY	DATE
ARCH.	SF	9/19/16	MECHANICAL	DS	9/19/16
BUILDING SERVICES	N/A	N/A	PIPING	MJ	9/19/16
CIVIL	SF	9/19/16	PROCESS	MW	9/19/16
ELECTRICAL	CF	9/19/16	QA / QC	PB	9/19/16
ENVIRON.	N/A	N/A	STRUCTURAL	SF	9/19/16
GEN. ARRANG.	DJ	9/19/16			
I & C	HF	9/19/16			
HVAC	WL	9/19/16			

DRAWING STATUS				
ISSUED	REV	DATE	SDE	PEM
APPROVED FOR BID	0	9/19/16	DS	BGA

NOT APPROVED FOR CONSTRUCTION UNLESS SIGNED AND DATED. DESTROY ALL PRINTS BEARING EARLIER DATE AND/OR REV.NO.

AECOM
URS ENERGY & CONSTRUCTION Inc. - an AECOM Company
ATKINS
AREVA

AECOM PROJECT NO.: 31269

DWG NUMBER	TITLE
DRAWING TRACEABILITY LIST	

REF NUMBER	TITLE
NEXT USED ON	REFERENCES H-16-001136-01

APROVED FOR BID
NOT FOR CONSTRUCTION

REV	DESCRIPTION	ORG	CHK	APVD	IDV	DATE
0	APPROVED FOR BID	RC	DJ	DS	DKC	9/19/16

REVISIONS

BLDG. NO. 202LP

SUBSYS. NO. 1001

CAUTION
NOT COMPLETE WITHOUT CURRENT CHANGE DOCUMENTS FROM DATABASE

ATTENTION
DESTROY THIS DOCUMENT BY SHREDDING MAY CONTAIN SENSITIVE INFORMATION

NAME	DATE	COMPANY
DRAWN BY		
DISCIPLINE APPROVAL		
DISCIPLINE ENGINEER		
ENGINEERING CHECKER		
DESIGN AUTHORITY		

U.S. DEPARTMENT OF ENERGY
Office of River Protection

LAWPS
202L-CFA-CFF-PV-101
FRAME ASSEMBLY DPD

SIZE F | DRAWING NO. BEGIN H-16-001137 | SHEET 1 | REV 0

SCALE NONE

PLOTID

DRAWING

H-16-001201-1

CFF FILTER MODULE CFF-P-03 ASSEMBLY DPD

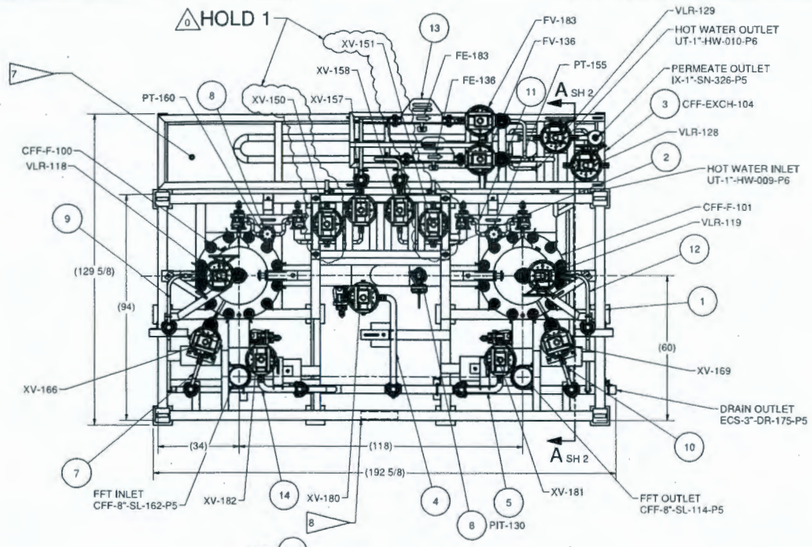

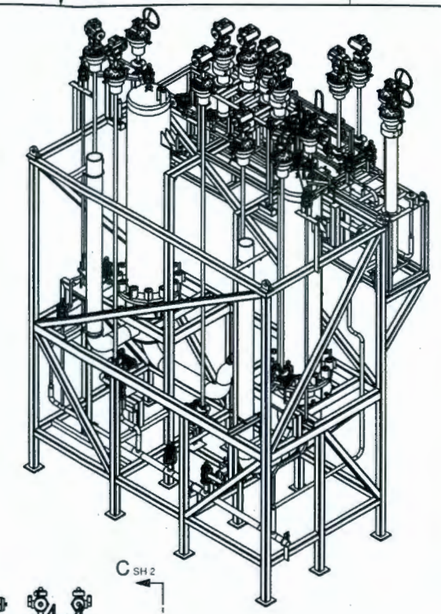

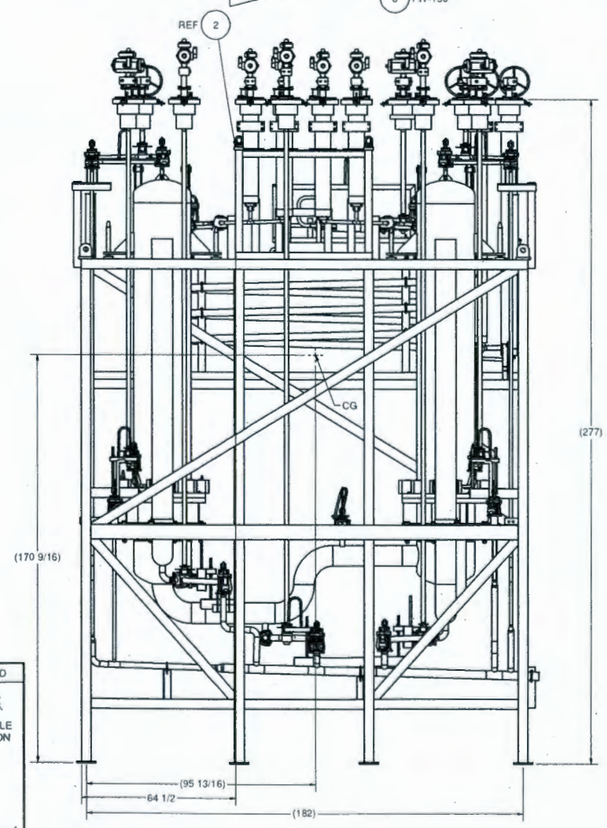

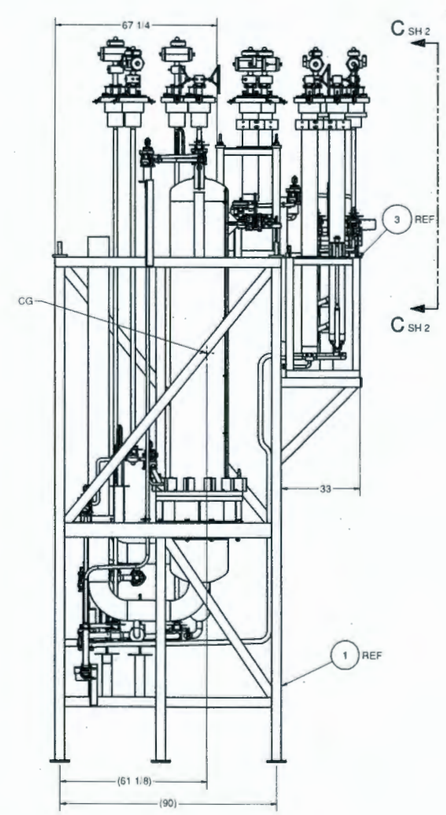

CFF FILTER MODULE CFF-P-03 ASSEMBLY DPD

SCALE 1/24

PARTS/MATERIAL LIST

QL	QTY	PART/DRAWING NUMBER	NOMENCLATURE/DESCRIPTION	MATERIAL/REFERENCE	SH	ITEM
FQA	1	H-16-001202-01	CFF FILTER MODULE CFF-P-03 FILTER SKID ASSEMBLY DPD	N/A	1	1
FQA	1	H-16-001204-01	CFF FILTER MODULE CFF-P-03 VALVE SKID ASSEMBLY DPD	N/A	1	2
FQA	1	H-16-001206-01	CFF-EXCH-104 ASSEMBLY DPD	N/A	1	3
FQA	1	H-16-001214-01	JUMPER CFFP03-DR-J-[H-14] ASSEMBLY	N/A	1	4
FQA	1	H-16-001215-01	JUMPER CFFP03-DR-J-[I-15] ASSEMBLY	N/A	1	5
FQA	1	H-16-001216-01	PIT INSTRUMENT JUMPER ASSEMBLY	N/A	1	6
FQA	1	H-16-001217-01	JUMPER CFFP03-DR-J-[B-2] ASSEMBLY	N/A	1	7
FQA	1	H-16-001218-01	JUMPER CFFP03-SN-J-[D-4] ASSEMBLY	N/A	1	8
FQA	1	H-16-001219-01	JUMPER CFFP03-DR-J-[A-1] ASSEMBLY	N/A	1	9
FQA	1	H-16-001220-01	JUMPER CFFP03-DR-J-[G-13] ASSEMBLY	N/A	1	10
FQA	1	H-16-001221-01	JUMPER CFFP03-DR-J-[E-9] ASSEMBLY	N/A	1	11
FQA	1	H-16-001222-01	JUMPER CFFP03-DR-J-[F-12] ASSEMBLY	N/A	1	12
FQA	1	H-16-001225-01	JUMPER CFFP03-SN-J-[5-6,10-11] ASSY	N/A	1	13
FQA	1	H-16-001226-01	JUMPER CFFP03-DR-J-[C-3] ASSEMBLY	N/A	1	14
FQA	AR	N/A	PIPE, 1 1/2 INCH SCHED 40S, SMLS	ASTM A312 TP316/316L SST	2	15

GENERAL NOTES:

1. DIMENSIONS AND TOLERANCES ARE IN ACCORDANCE WITH ASME Y14.5M-1994.
2. APPROXIMATE WEIGHT OF ASSEMBLY IS 30,000 LBS (EMPTY) AND 37,400 LBS (FULL).
3. FABRICATION SHALL BE IN ACCORDANCE WITH CROSS FLOW FILTER SYSTEM PROCUREMENT SPECIFICATION 15-2-001.
4. ALL MATERIAL SIZE AND THICKNESS SHOWN, EXCLUDING PROCESS PIPING ARE REFERENCE ONLY. ACTUAL SIZE AND THICKNESS TO BE DETERMINED DURING DESIGN.
5. VALVES ON JUMPERS WILL HAVE EXTENSION SHAFTS FOR OPERATION AT OPERATING DECK.

6. FINAL LOCATION OF JUMPER NOZZLES TO BE AS-BUIT WITHIN ±1 /16 INCH PRIOR TO FABRICATION OF FINAL JUMPER ASSEMBLIES.

7. BACKPULSE SYSTEM IS ON HOLD. THE CURRENT DESIGN LAYOUT PROVIDES FOR LOCATION TO INSTALL BACKPULSE TANK AND VALVE WHEN THEY ARE REMOVED FROM HOLD.

8. LABEL SKID (202LP-CFA-CFF-SK-01) IN ACCORDANCE WITH SPECIFICATION 15-2-001.

EQUIPMENT LIST FOR CFF SKID	
EQUIPMENT ID NUMBER	DESCRIPTION
202LP-CFA-CFF-F-100	CROSS FLOW FILTER A
202LP-CFA-CFF-F-101	CROSS FLOW FILTER B
202LP-CFA-CFF-EXCH-104	PERMEATE HEAT EXCHANGER
202LP-CFA-CFF-VLR-118	PLUG VALVE, 2 WAY
202LP-CFA-CFF-VLR-119	PLUG VALVE, 2 WAY
202LP-CFA-CFF-VLR-128	PLUG VALVE, 3 WAY
202LP-CFA-CFF-VLR-129	PLUG VALVE, 3 WAY
202LP-CFA-CFF-XV-150	PLUG VALVE, 2 WAY
202LP-CFA-CFF-XV-151	PLUG VALVE, 2 WAY
202LP-CFA-CFF-XV-157	PLUG VALVE, 2 WAY
202LP-CFA-CFF-XV-158	PLUG VALVE, 2 WAY
202LP-CFA-CFF-XV-166	PLUG VALVE, 2 WAY
202LP-CFA-CFF-XV-169	PLUG VALVE, 2 WAY
202LP-CFA-CFF-XV-180	PLUG VALVE, 2 WAY
202LP-CFA-CFF-XV-181	PLUG VALVE, 2 WAY
202LP-CFA-CFF-XV-182	PLUG VALVE, 2 WAY
202LP-CFA-CFF-PIT-130	PRESSURE TRANSMITTER
202LP-CFA-CFF-PIT-155	PRESSURE TRANSMITTER
202LP-CFA-CFF-PIT-160	PRESSURE TRANSMITTER
202LP-CFA-CFF-FE-136	FLOW TRANSMITTER
202LP-CFA-CFF-FE-183	FLOW TRANSMITTER
202LP-CFA-CFF-FV-136	FLOW CONTROL VALVE
202LP-CFA-CFF-FV-183	FLOW CONTROL VALVE

HOLD TABLE 7		
HOLD NO.	DESCRIPTION	RELEASE DATE
1	BACKPULSE IMPLEMENTATION TO BE DETERMINED BASED ON TESTING RESULTS	BY VENDOR ON APPROVAL BY BUYER

UNLESS OTHERWISE SPECIFIED
ALL DIMENSIONS ARE IN INCHES. REMOVE BURRS & SHARP EDGES.
THIRD ANGLE PROJECTION
TOLERANCES
.X = ±.1
.XX = ±.01
.XXX = ±.005
X/XX = ±1/16
ANGLE = ±.5 DEG
MACHINED SURFACES 125
MACHINED INSIDE
RADII = .04 ±.02

REVISION APPROVAL RECORD				REV 0	
DISCIPLINE	BY	DATE	DISCIPLINE	BY	DATE
ARCH.	SF	9/19/16	MECHANICAL	DS	9/19/16
BUILDING SERVICES	N/A	N/A	PIPING	MJ	9/19/16
CIVIL	SF	9/19/16	PROCESS	MW	9/19/16
ELECTRICAL	CF	9/19/16	QA / QC	PB	9/19/16
ENVIRON.	N/A	N/A	STRUCTURAL	SF	9/19/16
GEN. ARRANG.	DJ	9/19/16			
I & C	HF	9/19/16			
HVAC	VL	9/19/16			

DRAWING STATUS				
ISSUED	REV	DATE	SDE	PEM
APPROVED FOR BID	0	9/19/16	DS	BGA

NOT APPROVED FOR CONSTRUCTION UNLESS SIGNED AND DATED. DESTROY ALL PRINTS BEARING EARLIER DATE AND/OR REV.NO.

AECOM
URS ENERGY & CONSTRUCTION Inc. - an AECOM Company
ATKINS
AREVA

AECOM PROJECT NO.: 31269

DWG NUMBER	TITLE
DRAWING TRACEABILITY LIST	

REF NUMBER	TITLE
H-16-000023	P&ID CROSS FLOW FILTER PIT
REFERENCES	
NEXT USED ON	H-16-001200-01

APROVED FOR BID
NOT FOR CONSTRUCTION

REV	DESCRIPTION	ORG	CHK	APVD	IDV	DATE
0	APPROVED FOR BID	RC	DJ	DS	DKC	9/19/16

REVISIONS

BLDG. NO. 202LP

BLDG NO. 2510 8405 8409 8516

CAUTION
NOT COMPLETE WITHOUT CURRENT CHANGE DOCUMENTS FROM DATABASE

ATTENTION
DESTROY THIS DOCUMENT BY SHREDDING MAY CONTAIN SENSITIVE INFORMATION

NAME	DATE
DRAWN BY	
DRAWING APPROVAL	
DISCIPLINE ENGINEER	
ENGINEER	

U.S. DEPARTMENT OF ENERGY
Office of River Protection

LAWPS
CFF FILTER MODULE CFF-P-03
ASSEMBLY DPD

SIZE F | DRAWING NUMBER H-16-001201 | SHEET 1 | REV 0

SCALE NOTED

PLOTID

DRAWING

H-16-001201-2

CFF FILTER MODULE CFF-P-03 ASSEMBLY DPD

NOTES:

FOR GENERAL NOTES AND PARTS LIST SEE SHEET 1.

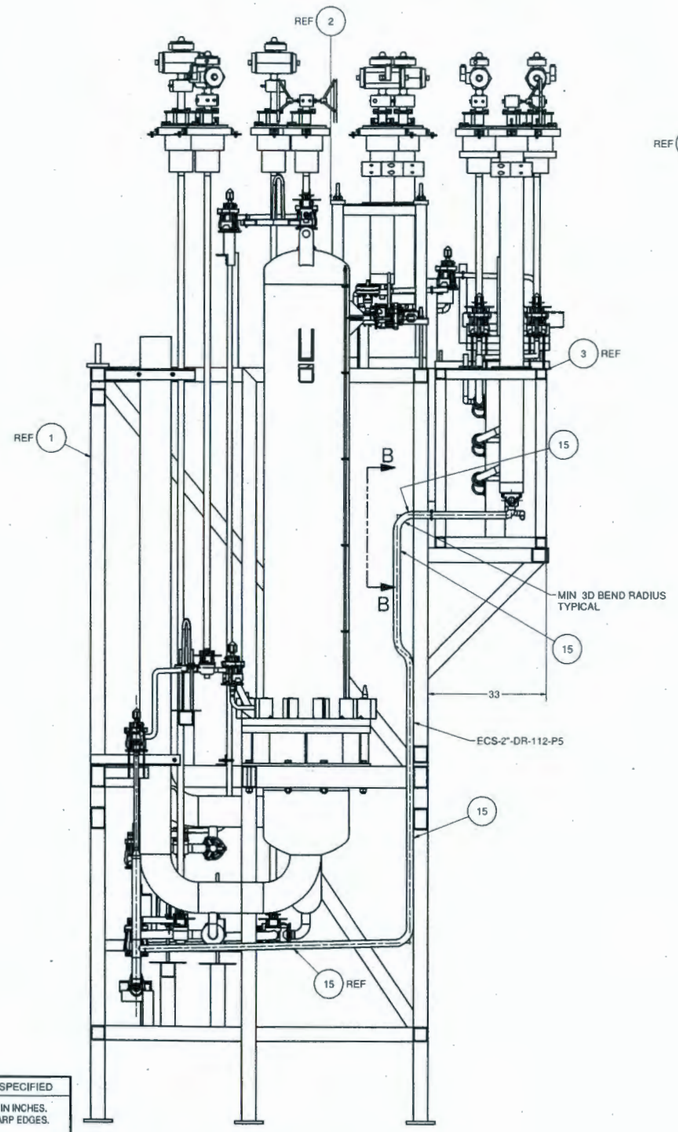

SECTION A-A
SCALE 1/16
SHEET 1

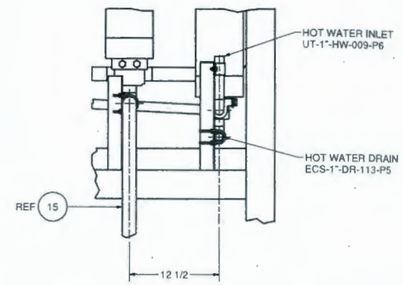

SECTION B-B
SCALE 1/8

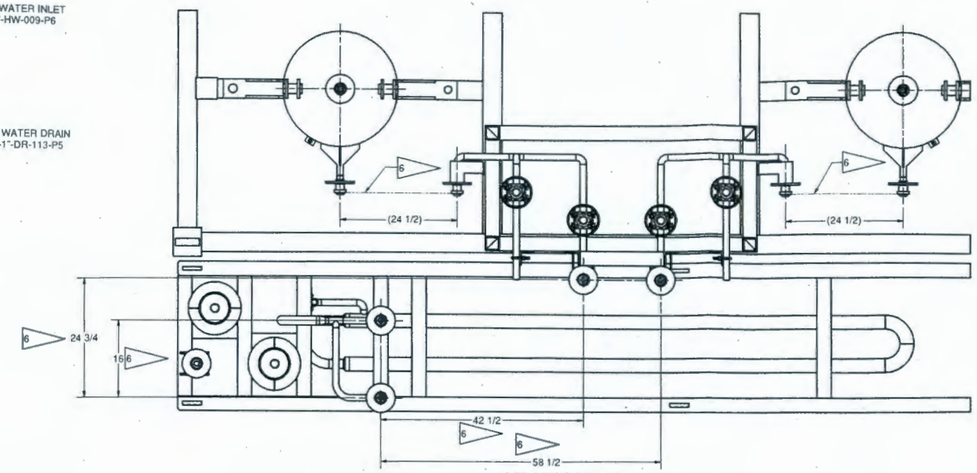

SECTION D-D
SCALE 1/12
JUMPERS REMOVED FOR CLARITY

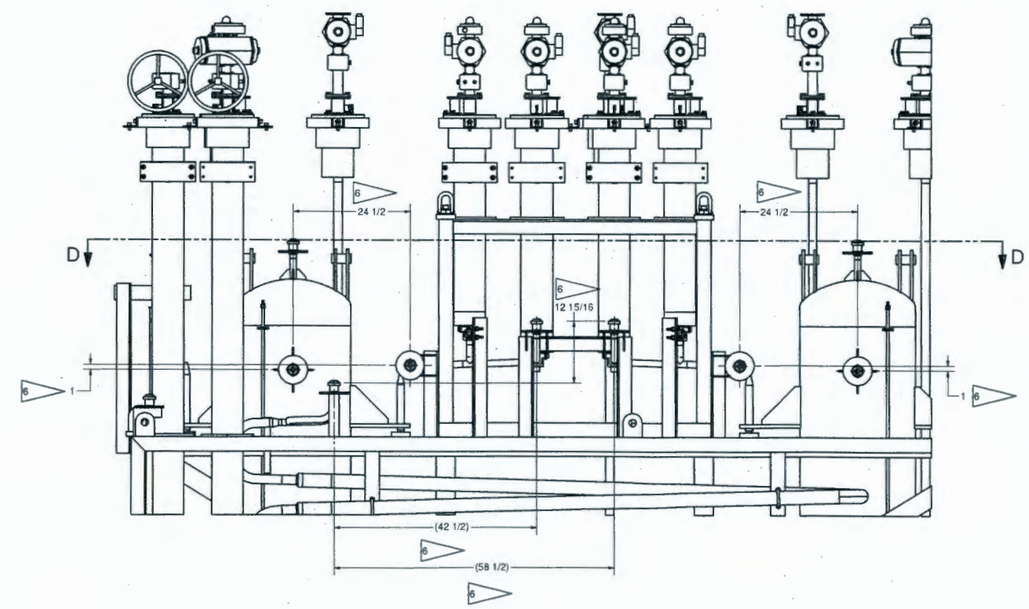

VIEW C-C
SCALE 1/12
SHEET 1
JUMPERS REMOVED FOR CLARITY

UNLESS OTHERWISE SPECIFIED

ALL DIMENSIONS ARE IN INCHES.
REMOVE BURRS & SHARP EDGES.

THIRD ANGLE PROJECTION

TOLERANCES
.X = ±.1
.XX = ±.01
.XXX = ±.005
X/XX = ±1/16
ANGLE = ±.5 DEG
MACHINED SURFACES 125
MACHINED INSIDE
RADII = .04 ±.02

REVISION APPROVAL RECORD					REV 0
DISCIPLINE	BY	DATE	DISCIPLINE	BY	DATE
ARCH.	SF	9/19/16	MECHANICAL	DS	9/19/16
BUILDING SERVICES	N/A	N/A	PIPING	MJ	9/19/16
CIVIL	SF	9/19/16	PROCESS	MW	9/19/16
ELECTRICAL	CF	9/19/16	QA / QC	PB	9/19/16
ENVIRON.	N/A	N/A	STRUCTURAL	SF	9/19/16
GEN. ARRANG.	DJ	9/19/16			
I & C	HF	9/19/16			
HVAC	WL	9/19/16			

DRAWING STATUS				
ISSUED	REV	DATE	SDE	PEM
APPROVED FOR BID	0	9/19/16	DS	BGA

NOT APPROVED FOR CONSTRUCTION UNLESS SIGNED AND DATED. DESTROY ALL PRINTS BEARING EARLIER DATE AND/OR REV.NO.

AECOM
URS ENERGY & CONSTRUCTION Inc. - an AECOM Company
ATKINS
AREVA

AECOM PROJECT NO.: 31269

DWG NUMBER	TITLE
	DRAWING TRACEABILITY LIST

REF NUMBER	TITLE
	REFERENCES
NEXT USED ON	SHEET 1

APROVED FOR BID
NOT FOR CONSTRUCTION

REV	DESCRIPTION	ORG	CHK	APVD	IDV	DATE
0	APPROVED FOR BID	RC	DJ	DS	DKC	9/19/16

REVISIONS

BUDG. NO. 202LP

BUDG. NO. 2510 8405 8409 8516

CAUTION
NOT COMPLETE WITHOUT CURRENT CHANGE DOCUMENTS FROM DATABASE

ATTENTION
DESTROY THIS DOCUMENT BY SHREDDING MAY CONTAIN SENSITIVE INFORMATION

NAME	DATE	COMPANY
DRAWN BY		
DRAFTING APPROVAL		
DISCIPLINE ENGINEER		
ENGINEER		

U.S. DEPARTMENT OF ENERGY
Office of River Protection

LAWPS
CFF FILTER MODULE CFF-P-03
ASSEMBLY DPD

SIZE F | DRAWING NUMBER H-16-001201 | SHEET 2 | REV 0

SCALE NOTED

PLOTID

DRAWING

H-16-001202-1

CFF FILTER MODULE CFF-P-03 FILTER SKID ASSEMBLY DPD

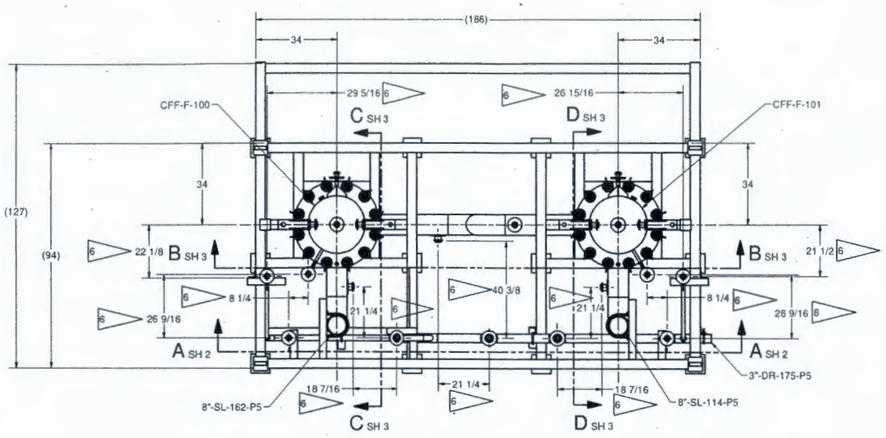

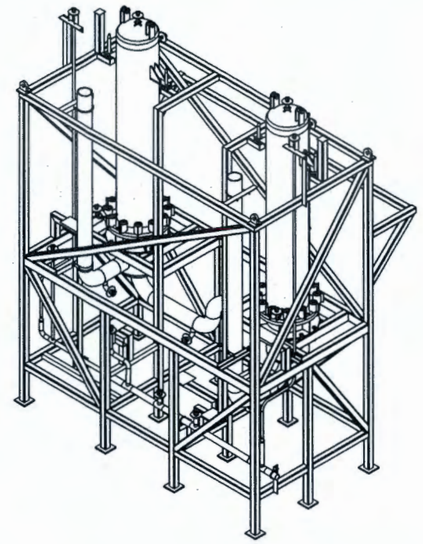

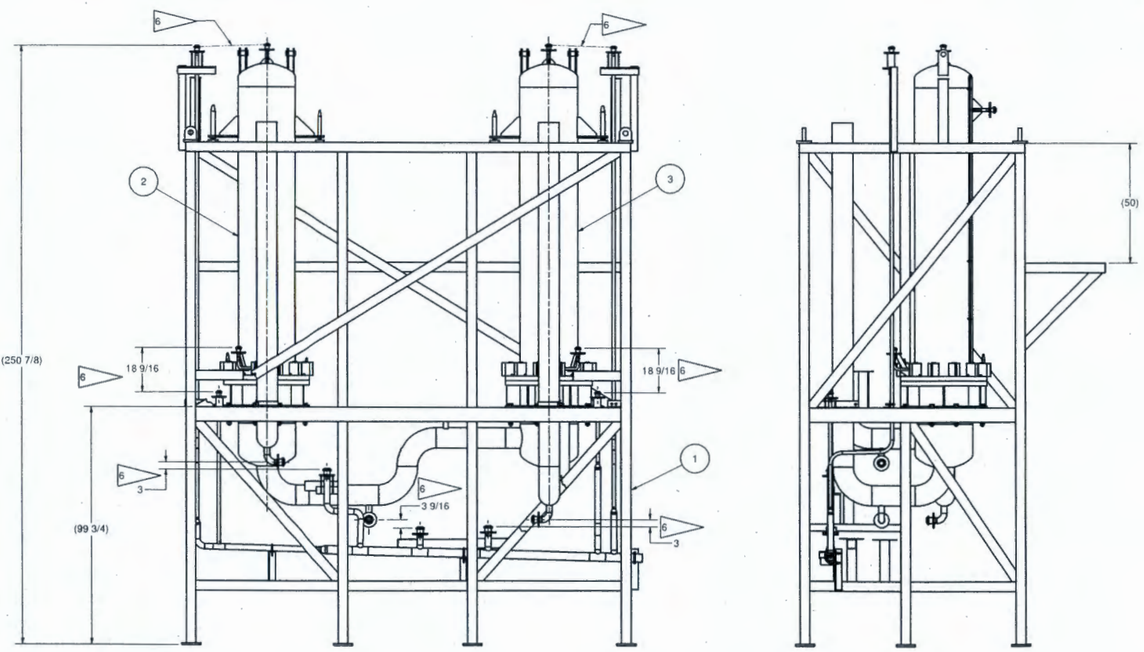

PARTS/MATERIAL LIST

QL	QTY	PART/DRAWING NUMBER	NOMENCLATURE/DESCRIPTION	MATERIAL/REFERENCE	SH	ITEM
FQA	1	H-16-001203-01	CFF FILTER MODULE CFF-P-03 FILTER FRAME ASSEMBLY DPD	N/A	1	1
FQA	1	H-16-001208-01	CFF-F-100 ASSEMBLY DPD	N/A	1	2
FQA	1	H-16-001210-01	CFF-F-101 ASSEMBLY DPD	N/A	1	3
FQA	6	H-16-001925-01	2" PUREX KICKOFF ASSEMBLY	N/A	2	4
FQA	5	H-16-001926-01	1" PUREX KICKOFF ASSEMBLY	N/A	2	5
FQA	2	(B2400-8-SS6)	STANDARD PIPE STRAP, 8 INCH PIPE, 316 SST	(COOPER B-LINE)	3	6
FQA	2	(29605T14)	U-BOLT, 8 INCH PIPE, 5/8-11 THRD, WITH 4 NUTS, 304 SST	(MCMASTER-CARR)	3	7
FQA	2	(8889T48)	U-BOLT, 3 INCH PIPE, 1/2-13 THRD, WITH 4 NUTS, 304 SST	(MCMASTER-CARR)	2	8
FQA	1	(8889T46)	U-BOLT, 2 INCH PIPE, 3/8-16 THRD, WITH 4 NUTS, 304 SST	(MCMASTER-CARR)	2	9
FQA	2	(8889T33)	U-BOLT, 1 INCH PIPE, 3/8-16 THRD, WITH 4 NUTS, 304 SST	(MCMASTER-CARR)	2	10
FQA	4	N/A	ELBOW, 8 INCH LR 90 DEG SCHED 80	ASTM A403 W316/316L-S SST	3	11
FQA	6	N/A	ELBOW, 2 INCH LR 90 DEG SCHED 40	ASTM A403 W316/316L-S SST	3	12
FQA	4	N/A	ELBOW, 1 INCH LR 90 DEG SCHED 40	ASTM A403 W316/316L-S SST	2	13
FQA	5	N/A	TEE, REDUCING 3 X 2 SCHED 40	ASTM A403 WP316/316L-S SST	2	14
FQA	1	N/A	TEE, REDUCING 2 X 1 SCHED 40	ASTM A403 WP316/316L-S SST	2	15
FQA	1	N/A	TEE, REDUCING 2 X 1 1/2 SCHED 40	ASTM A403 WP316/316L-S SST	2	16
FQA	1	N/A	REDUCER, CONCENTRIC 2 X 3 SCHED 40	ASTM A403 WP316/316L-S SST	2	17
FQA	3	N/A	REDUCER, CONCENTRIC 1 X 2 SCHED 40	ASTM A403 WP316/316L-S SST	2	18
FQA	6	N/A	PIPE, 8 INCH SCHED 80S, SMLS	ASTM A312 TP316/316L SST	3	19
FQA	AR	N/A	PIPE, 3 INCH SCHED 40S, SMLS	ASTM A312 TP316/316L SST	2	20
FQA	AR	N/A	PIPE, 2 INCH SCHED 40S, SMLS	ASTM A312 TP316/316L SST	2	21
FQA	AR	N/A	PIPE, 1 INCH SCHED 40S, SMLS	ASTM A312 TP316/316L SST	2	22
FQA	AR	N/A	PLATE 1/4 INCH THICK	ASTM A240 304L SST	2	23
FAQ	16	N/A	HEAVY HEX BOLT, 1-8 UNC-2A X 8 1/2 LG	ASTM A194 GR B8M SST	3	24
FQA	4	N/A	BOLT, HEX HEAD, 1/2-13 UNC-2A X 1 1/2 LG	ASTM A193 GR B8M CL 2 SST	3	25
FQA	4	N/A	HEX NUT, 1/2-13 UNC-2B	ASTM A194 GR 8M SST	3	26
FQA	16	N/A	HEAVY HEX NUT, 1-8 UNC-2B	ASTM A194 GR 8M SST	3	27
FQA	32	N/A	WASHER, 1 CIRCULAR, SST	ANY 300 SERIES SST	3	28

GENERAL NOTES:

1. DIMENSIONS AND TOLERANCES ARE IN ACCORDANCE WITH ASME Y14.5M-1994.
2. APPROXIMATE WEIGHT OF ASSEMBLY = 17,700 LBS (EMPTY).
3. FABRICATION SHALL BE IN ACCORDANCE WITH CROSS FLOW FILTER SYSTEM PROCUREMENT SPECIFICATION 15-2-001.
4. ALL MATERIAL SIZE AND THICKNESS SHOWN, EXCLUDING PROCESS PIPING ARE REFERENCE ONLY. ACTUAL SIZE AND THICKNESS TO BE DETERMINED DURING DESIGN.

6 STIFFEN PUREX NOZZLES WITH GUSSET PLATES AS REQURIED.

6 FINAL LOCATION OF JUMPER NOZZLES TO BE AS-BUILT WITHIN ±1/16 INCH PRIOR TO FABRICATION OF FINAL JUMPER ASSEMBLIES.

7 TEMPLATE HOLE PATTERN FROM FILTER FLANGE AND DRILL HOLE THROUGH TUBE STEEL AS REQUIRED FOR INTALLATION OF BOLT ASSEMBLY. SHIM UNDER FILTER FLANGE AS REQUIRED TO ENSURE FILTER IS INSTALLED LEVEL AND PLUMB.

8 PIPE MAY BE BENT AS SHOWN INSTEAD OF USING FITTINGS. PIPE BEND RADIUS IN ACCORDANCE WITH CROSS FLOW FILTER SYSTEM PROCUREMENT SPECIFICATION 15-2-001.

6 SUPPORT FOR FABRICATION, SHIPPING, AND TRANSPORTATION. REMOVE U-BOLT AFTER FINAL TIE IN WELD IS COMPLETE.

10. U-BOLTS ARE ALL NON-GRIPPING WITH 1/16 INCH GAP.

11 WELD LUGS ON EITHER SIDE OF PIPE STRAP TO PROVIDE A RISER SUPPORT FOR PIPE WIEIGHT. THIS SUPPORT WILL REST ON THE SKID FRAME TO REDUCE VERTICAL LOADING TO FILTER NOZZLE.

CFF FILTER MODULE CFF-P-03 FILTER SKID ASSEMBLY DPD

SCALE 1/24

UNLESS OTHERWISE SPECIFIED
ALL DIMENSIONS ARE IN INCHES.
REMOVE BURRS & SHARP EDGES.
THIRD ANGLE PROJECTION
TOLERANCES
.X = ±.1
.XX = ±.01
.XXX = ±.005
X/XX = ±1/16
ANGLE = ±.5 DEG
MACHINED SURFACES 125
MACHINED INSIDE
RADII = .04 ±.02

REVISION APPROVAL RECORD					REV 0
DISCIPLINE	BY	DATE	DISCIPLINE	BY	DATE
ARCH.	SF	9/19/16	MECHANICAL	DS	9/19/16
BUILDING SERVICES	N/A	N/A	PIPING	MJ	9/19/16
CIVIL	SF	9/19/16	PROCESS	MW	9/19/16
ELECTRICAL	CF	9/19/16	QA / QC	PB	9/19/16
ENVIRON.	N/A	N/A	STRUCTURAL	SF	9/19/16
GEN. ARRANG.	DJ	9/19/16			
I & C	HF	9/19/16			
HVAC	WL	9/19/16			

DRAWING STATUS				
ISSUED	REV	DATE	SDE	PEM
APPROVED FOR BID	0	9/19/16	DS	BGA

NOT APPROVED FOR CONSTRUCTION UNLESS SIGNED AND DATED. DESTROY ALL PRINTS BEARING EARLIER DATE AND/OR REV.NO.

AECOM
URS ENERGY & CONSTRUCTION Inc. - an AECOM Company
ATKINS
AREVA
AECOM PROJECT NO.: 31269

DWG NUMBER	TITLE
DRAWING TRACEABILITY LIST	

REF NUMBER	TITLE
REFERENCES	
NEXT USED ON	H-16-001201-01

APROVED FOR BID
NOT FOR CONSTRUCTION

REV	DESCRIPTION	ORG	CHK	APVD	IDV	DATE
0	APPROVED FOR BID	RC	DJ	DS	DKC	9/19/16

REVISIONS

BLDG. NO. 202LP
INDEX NO. 2510 8405 8409

CAUTION
NOT COMPLETE WITHOUT CURRENT CHANGE DOCUMENTS FROM DATABASE

ATTENTION
DESTROY THIS DOCUMENT BY SHREDDING MAY CONTAIN SENSITIVE INFORMATION

NAME	DATE	COMPANY
DRAWN BY		
CONTRACT APPROVAL		
DISCIPLINE ENGINEER		
ENGINEER		

U.S. DEPARTMENT OF ENERGY
Office of River Protection

LAWPS
CFF FILTER MODULE CFF-P-03
FILTER SKID ASSEMBLY DPD

SIZE F | DRAWING NUMBER H-16-001202 | SHEET 1 | REV 0
SCALE NOTED
PLOTID

DRAWING

H-16-001202-2

CFF FILTER MODULE CFF-P-03 FILTER SKID ASSEMBLY DPD

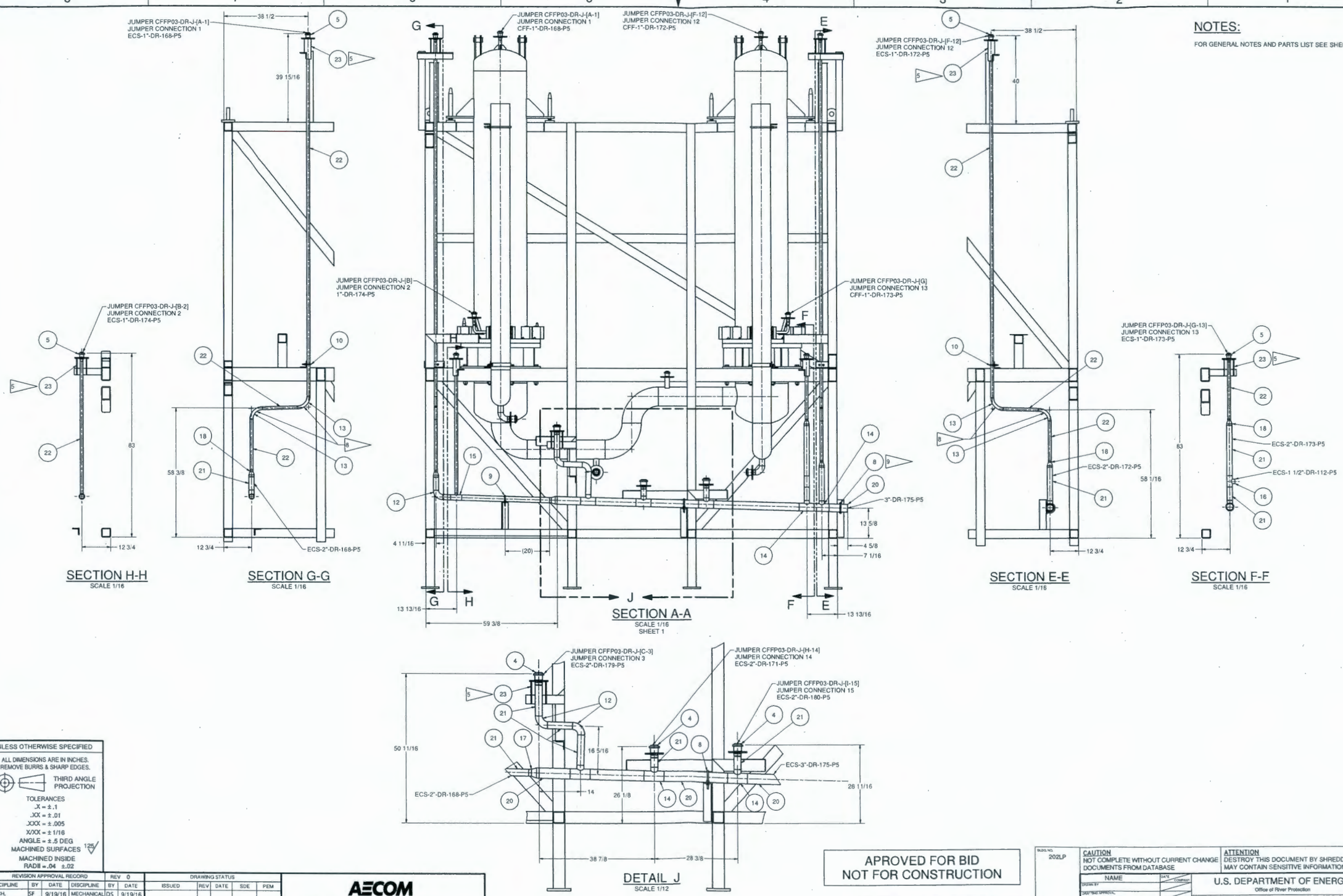

NOTES:

FOR GENERAL NOTES AND PARTS LIST SEE SHEET 1.

UNLESS OTHERWISE SPECIFIED

ALL DIMENSIONS ARE IN INCHES.
REMOVE BURRS & SHARP EDGES.

THIRD ANGLE PROJECTION

TOLERANCES
.X = ±.1
.XX = ±.01
.XXX = ±.005
X/XX = ±1/16
ANGLE = ±.5 DEG
MACHINED SURFACES 125
MACHINED INSIDE RADII = .04 ±.02

REVISION APPROVAL RECORD — REV 0

DISCIPLINE	BY	DATE	DISCIPLINE	BY	DATE
ARCH.	SF	9/19/16	MECHANICAL	DS	9/19/16
BUILDING SERVICES	N/A	N/A	PIPING	MJ	9/19/16
CIVIL	SF	9/19/16	PROCESS	MW	9/19/16
ELECTRICAL	CF	9/19/16	QA / QC	PB	9/19/16
ENVIRON.	N/A	N/A	STRUCTURAL	SF	9/19/16
GEN. ARRANG.	DJ	9/19/16			
I & C	HF	9/19/16			
HVAC	WL	9/19/16			

DRAWING STATUS

ISSUED	REV	DATE	SDE	PEM
APPROVED FOR BID	0	9/19/16	DS	BGA

NOT APPROVED FOR CONSTRUCTION UNLESS SIGNED AND DATED. DESTROY ALL PRINTS BEARING EARLIER DATE AND/OR REV.NO.

AECOM
URS ENERGY & CONSTRUCTION Inc. - an AECOM Company
ATKINS
AREVA

AECOM PROJECT NO.: 31269

DWG NUMBER	TITLE	REF NUMBER	TITLE
	DRAWING TRACEABILITY LIST	NEXT USED ON	SHEET 1

REFERENCES

REV	DESCRIPTION	ORG	CHK	APVD	IDV	DATE
0	APPROVED FOR BID	RC	DJ	DS	DKC	9/19/16

REVISIONS

APROVED FOR BID
NOT FOR CONSTRUCTION

BLDG. NO. 202LP

INDEX NO. 2510 8405 8409

CAUTION
NOT COMPLETE WITHOUT CURRENT CHANGE DOCUMENTS FROM DATABASE

ATTENTION
DESTROY THIS DOCUMENT BY SHREDDING MAY CONTAIN SENSITIVE INFORMATION

NAME	DATE	COMPANY
DRAWN BY		
CHIEF TRADE APPROVAL		
DESIGN CHIEF ENGINEER		
ENGINEER		

U.S. DEPARTMENT OF ENERGY
Office of River Protection

LAWPS
CFF FILTER MODULE CFF-P-03
FILTER SKID ASSEMBLY DPD

SIZE F | DRAWING NUMBER H-16-001202 | SHEET 2 | REV 0

SCALE NOTED

PLOTID

DRAWING

H-16-001202-3

CFF FILTER MODULE CFF-P-03 FILTER SKID ASSEMBLY DPD

NOTES:

FOR GENERAL NOTES AND PARTS LIST SEE SHEET 1.

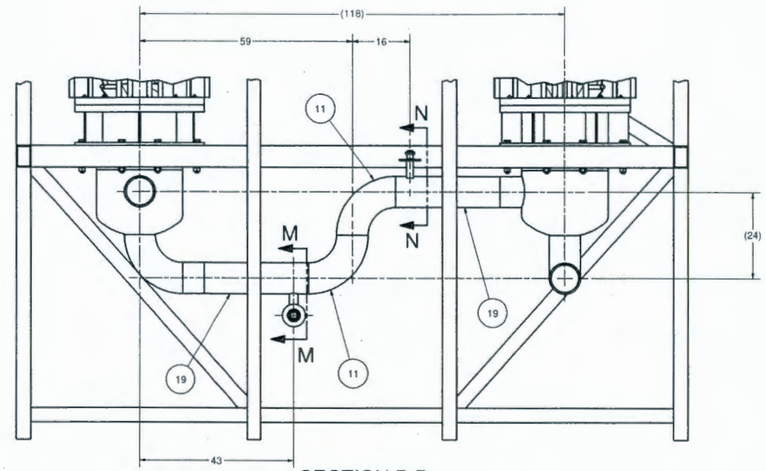

SECTION B-B
SCALE 1/16
SHEET 1

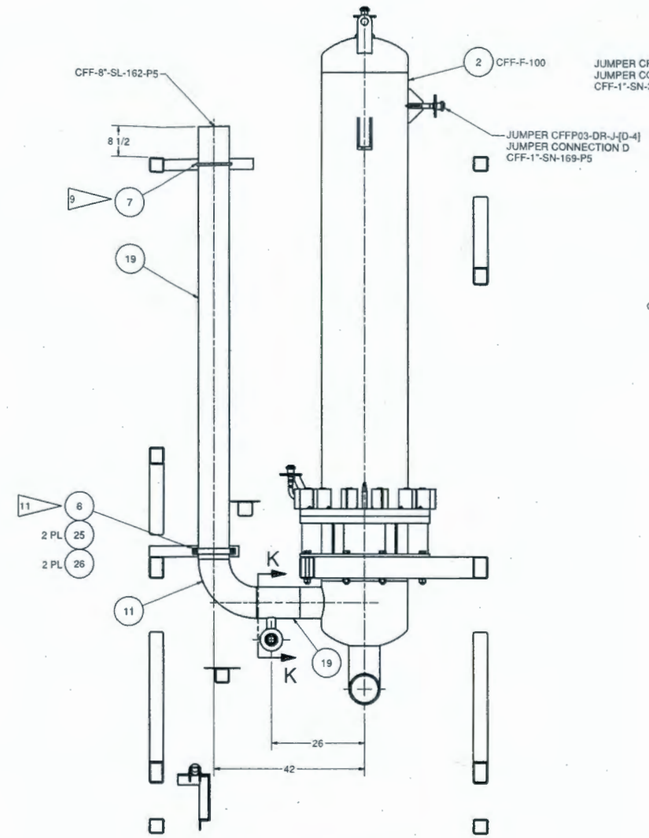

SECTION C-C
SCALE 1/16
SHEET 1

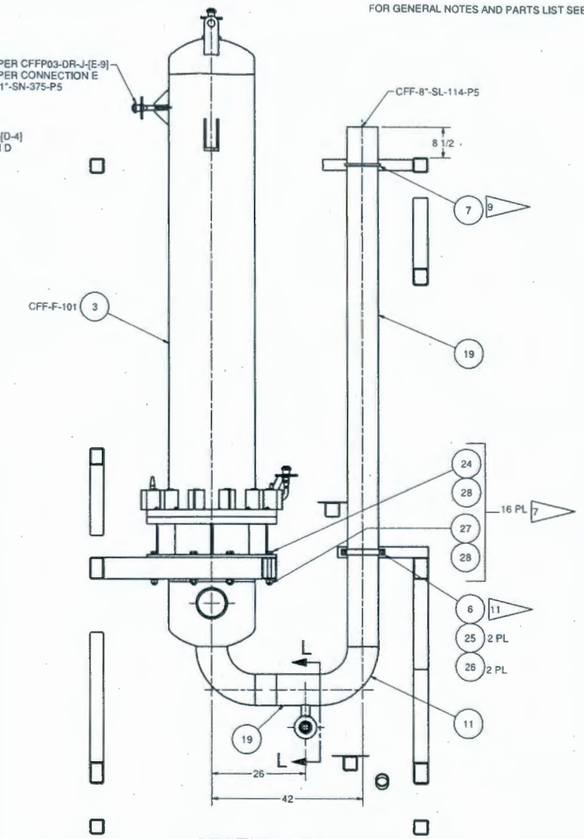

SECTION D-D
SCALE 1/16
SHEET 1

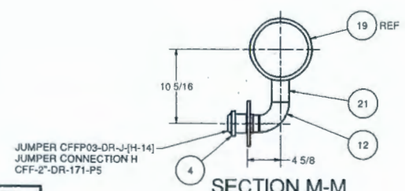

SECTION M-M
SCALE 1/8

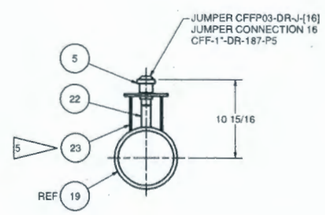

SECTION N-N
SCALE 1/8

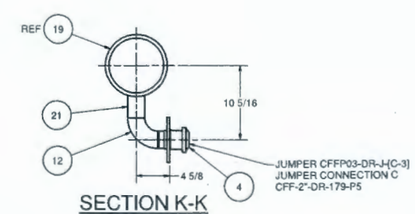

SECTION K-K
SCALE 1/8

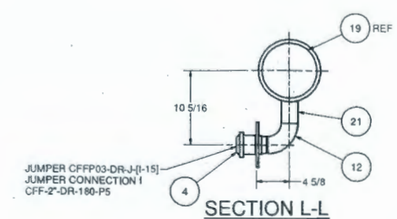

SECTION L-L
SCALE 1/8

UNLESS OTHERWISE SPECIFIED

ALL DIMENSIONS ARE IN INCHES.
REMOVE BURRS & SHARP EDGES.

THIRD ANGLE PROJECTION

TOLERANCES
.X = ±.1
.XX = ±.01
.XXX = ±.005
X/XX = ±1/16
ANGLE = ±.5 DEG
MACHINED SURFACES 125
MACHINED INSIDE
RADII = .04 ±.02

REVISION APPROVAL RECORD — REV 0

DISCIPLINE	BY	DATE	DISCIPLINE	BY	DATE
ARCH.	SF	9/19/16	MECHANICAL	DS	9/19/16
BUILDING SERVICES	N/A	N/A	PIPING	MJ	9/19/16
CIVIL	SF	9/19/16	PROCESS	MW	9/19/16
ELECTRICAL	CF	9/19/16	QA / QC	PB	9/19/16
ENVIRON.	N/A	N/A	STRUCTURAL	SF	9/19/16
GEN. ARRANG.	DJ	9/19/16			
I & C	HF	9/19/16			
HVAC	WL	9/19/16			

DRAWING STATUS

ISSUED	REV	DATE	SDE	PEM
APPROVED FOR BID	0	9/19/16	DS	BGA

NOT APPROVED FOR CONSTRUCTION UNLESS SIGNED AND DATED. DESTROY ALL PRINTS BEARING EARLIER DATE AND/OR REV.NO.

AECOM
URS ENERGY & CONSTRUCTION Inc. - an AECOM Company
ATKINS
AREVA

AECOM PROJECT NO.: 31269

DWG NUMBER	TITLE

DRAWING TRACEABILITY LIST

REF NUMBER	TITLE

REFERENCES
NEXT USED ON SHEET 1

APROVED FOR BID
NOT FOR CONSTRUCTION

REV	DESCRIPTION	ORG	CHK	APVD	IDV	DATE
0	APPROVED FOR BID	RC	DJ	DS	DKC	9/19/16

REVISIONS

SKIDS NO. 202LP

INDEX NO. 2510 8405 8409

CAUTION
NOT COMPLETE WITHOUT CURRENT CHANGE DOCUMENTS FROM DATABASE

ATTENTION
DESTROY THIS DOCUMENT BY SHREDDING
MAY CONTAIN SENSITIVE INFORMATION

NAME	DATE	COMPANY
DRAWN BY		
DESIGN APPROVAL		
DISCIPLINE ENGINEER		

U.S. DEPARTMENT OF ENERGY
Office of River Protection

LAWPS
CFF FILTER MODULE CFF-P-03
FILTER SKID ASSEMBLY DPD

SIZE F — DRAWING NUMBER H-16-001202 — SHEET 3 — REV 0

SCALE NOTED

PLOTID

DRAWING

H-16-001203-1

CFF FILTER MODULE CFF-P-03 FILTER FRAME ASSEMBLY DPD

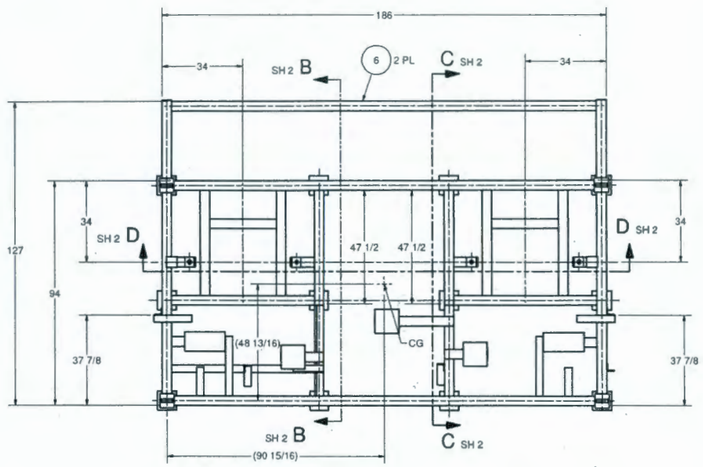

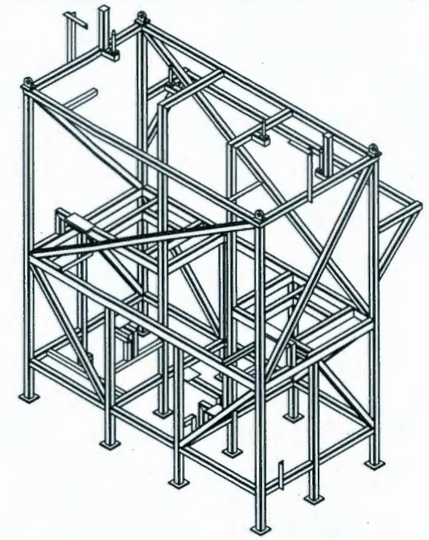

PARTS/MATERIAL LIST

QL	QTY	PART/DRAWING NUMBER	NOMENCLATURE/DESCRIPTION	MATERIAL/REFERENCE	SH	ITEM
FQA	4	N/A	LIFTING BRACKET, 1 1/2 INCH PLATE	ASTM A240 304L SST	3	1
FQA	2	N/A	LONG GUIDE PIN, RD BAR 1 1/8 DIA	ASTM A276 NITRONIC 60	3	2
FQA	2	N/A	SHORT GUIDE PIN, RD BAR 1 1/8 DIA	ASTM A276 NITRONIC 60	3	3
FQA	4	N/A	GUIDE PIN BRACKET, PLATE 1 INCH THICK	ASTM A240 304L SST	3	4
FQA	12	N/A	BASE PLATE, 8 X 8 X 3/4 THK	ASTM A240 304 SST	3	5
FQA	AR	N/A	HSS, 4 X 4 X 1/4 THICK	ASTM A554 304 SST	1	6
FQA	AR	N/A	HSS, 6 X 4 X 1/4 THICK	ASTM A554 304 SST	1	7
FQA	AR	N/A	ANGLE, 3 x 3 x 3/8 THICK	ASTM A276 304L SST	1	8
FQA	11	N/A	PLATE, 3 3/4 X 3 3/4 X 11 GA THICK	ASTM A240 304L SST	2	9
FQA	4	N/A	PLATE, 6 X 6 X 1 THICK	ASTM A240 304L SST	2	10
FQA	2	N/A	PLATE, 8 X 17 X 1/8 THK	ASTM A240 304L SST	2	11
FQA	5	N/A	PLATE, 10 X 10 X 1/8 THK	ASTM A240 304L SST	2	12

GENERAL NOTES:

1. DIMENSIONS AND TOLERANCES ARE IN ACCORDANCE WITH ASME Y14.5M-1994.
2. APPROXIMATE WEIGHT OF ASSEMBLY = 7,000 LBS.
3. FABRICATION SHALL BE IN ACCORDANCE WITH CROSS FLOW FILTER SYSTEM PROCUREMENT SPECIFICATION 15-2-001.
4. ALL MATERIAL SIZE AND THICKNESS SHOWN ARE REFERENCE ONLY. ACTUAL SIZE AND THICKNESS TO BE DETERMINED DURING DESIGN.

5 GUIDE AS REQUIRED FOR STABALIZING JUMPER ASSEMBLY DURING INSTALLATION AND REMOVAL.

5 ANGLE SUPPORT 8 INCH PIPE. DO NOT WELD TO FRAME. ANGLES REST ON FRAME AND REDUCE THE MOMENT IN THE FILTER NOZZLE FROM THE PIPES VERTIAL MOVEMENT.

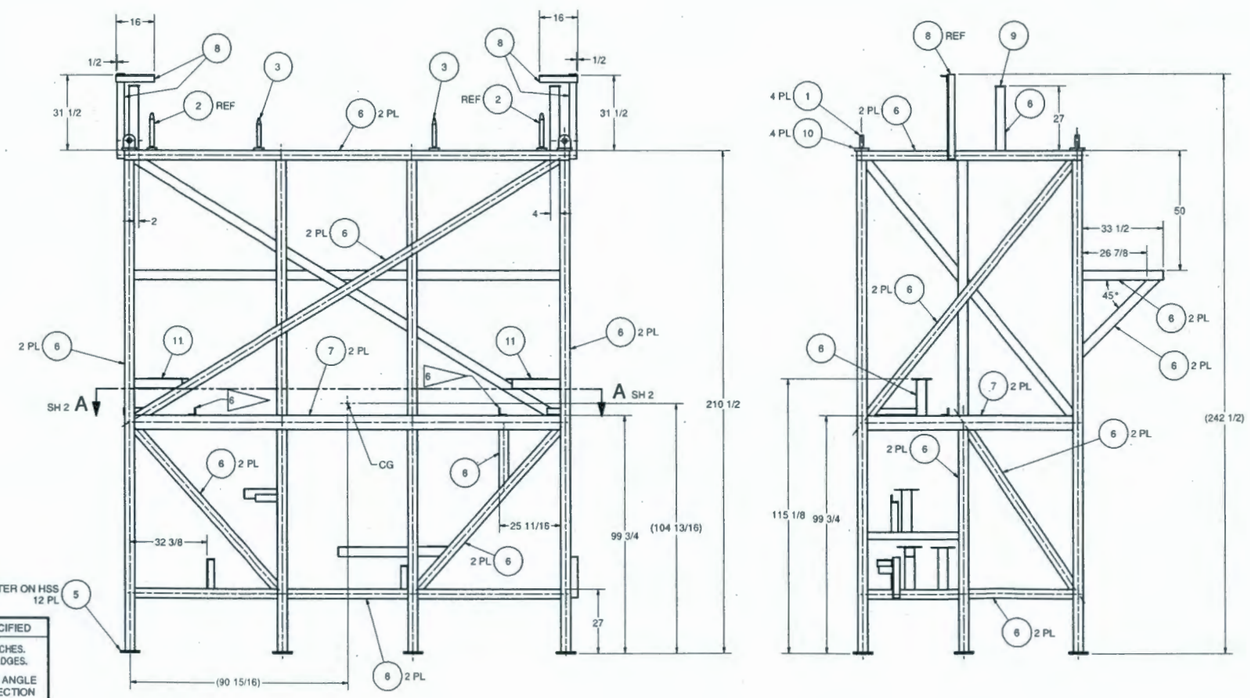

CFF FILTER MODULE CFF-P-03 FILTER FRAME ASSEMBLY DPD

SCALE 1/24

UNLESS OTHERWISE SPECIFIED

ALL DIMENSIONS ARE IN INCHES. REMOVE BURRS & SHARP EDGES.

THIRD ANGLE PROJECTION

TOLERANCES
.X = ±.1
.XX = ±.01
.XXX = ±.005
X/XX = ±1/16
ANGLE = ±.5 DEG
MACHINED SURFACES 125
MACHINED INSIDE
RADII = .04 ±.02

REVISION APPROVAL RECORD — REV 0

DISCIPLINE	BY	DATE	DISCIPLINE	BY	DATE
ARCH.	SF	9/19/16	MECHANICAL	DS	9/19/16
BUILDING SERVICES	N/A	N/A	PIPING	MJ	9/19/16
CIVIL	SF	9/19/16	PROCESS	MW	9/19/16
ELECTRICAL	CF	9/19/16	QA / QC	PB	9/19/16
ENVIRON.	N/A	N/A	STRUCTURAL	SF	9/19/16
GEN. ARRANG.	DJ	9/19/16			
I & C	HF	9/19/16			
HVAC	WL	9/19/16			

DRAWING STATUS

ISSUED	REV	DATE	SDE	PEM
APPROVED FOR BID	0	9/19/16	DS	BGA

NOT APPROVED FOR CONSTRUCTION UNLESS SIGNED AND DATED. DESTROY ALL PRINTS BEARING EARLIER DATE AND/OR REV.NO.

AECOM
URS ENERGY & CONSTRUCTION Inc. - an AECOM Company
ATKINS
AREVA

AECOM PROJECT NO.: 31269

DWG NUMBER	TITLE
	DRAWING TRACEABILITY LIST

REF NUMBER	TITLE
	REFERENCES
NEXT USED ON	H-16-001202-01

APROVED FOR BID
NOT FOR CONSTRUCTION

REV	DESCRIPTION	ORG	CHK	APVD	IDV	DATE
0	APPROVED FOR BID	RC	DJ	DS	DKC	9/19/16

REVISIONS

BLDG. NO. 202LP

INDEX NO. 1001

CAUTION
NOT COMPLETE WITHOUT CURRENT CHANGE DOCUMENTS FROM DATABASE

ATTENTION
DESTROY THIS DOCUMENT BY SHREDDING MAY CONTAIN SENSITIVE INFORMATION

NAME	DATE	COMPANY
DRAWN BY		
DESIGNER APPROVAL		
DESIGN ENGINEER		
ENGINEER		

U.S. DEPARTMENT OF ENERGY
Office of River Protection

LAWPS
CFF FILTER MODULE CFF-P-03
FILTER FRAME ASSEMBLY DPD

SIZE F | DRAWING NUMBER H-16-001203 | SHEET 1 | REV 0

SCALE NOTED

PLOTTED

DRAWING

H-16-001203-2

CFF FILTER MODULE CFF-P-03 FILTER FRAME ASSEMBLY DPD

NOTES:

FOR GENERAL NOTES AND PARTS LIST SEE SHEET 1.

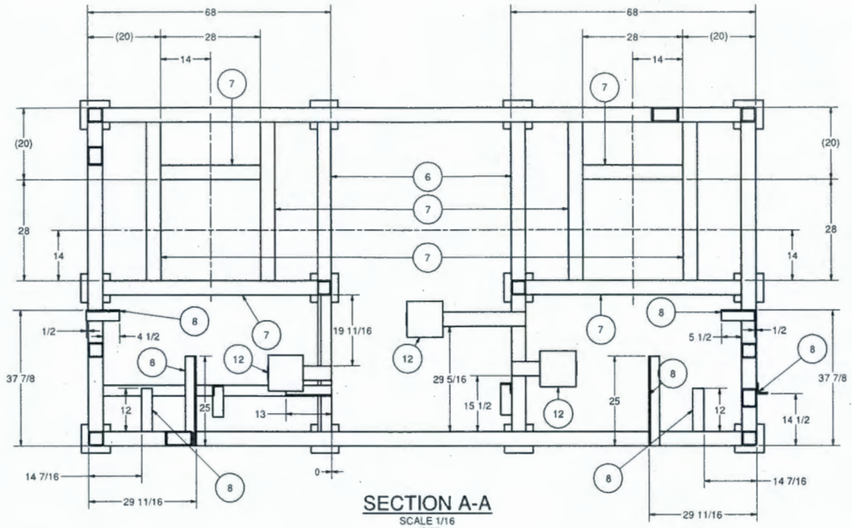

SECTION A-A
SCALE 1/16
SHEET 1

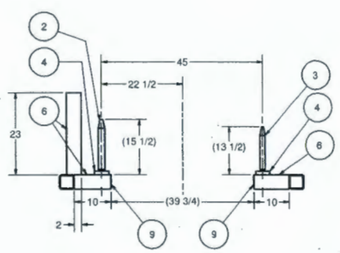

SECTION D-D
SCALE 1/16
SHEET 1

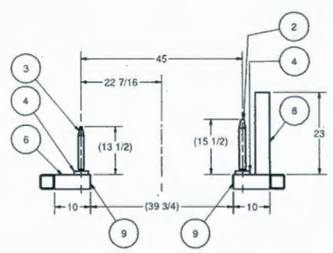

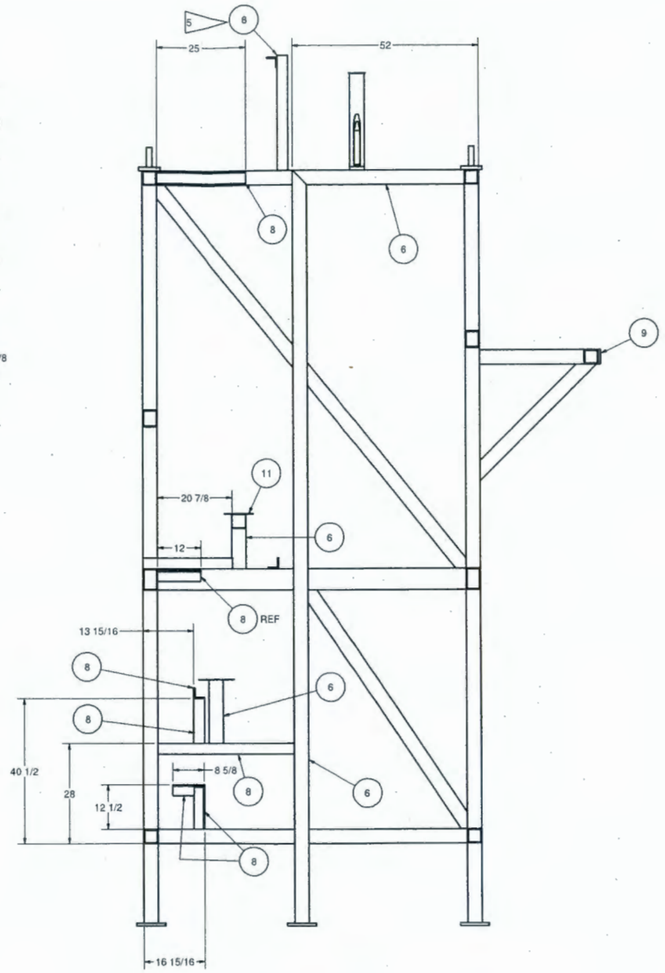

SECTION B-B
SCALE 1/16
SHEET 1

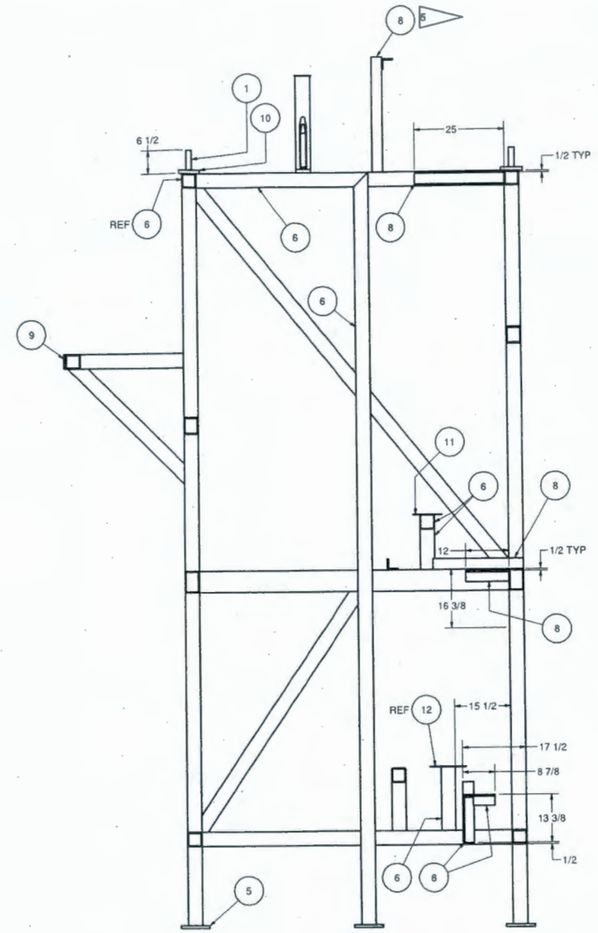

SECTION C-C
SCALE 1/16
SHEET 1

UNLESS OTHERWISE SPECIFIED

ALL DIMENSIONS ARE IN INCHES.
REMOVE BURRS & SHARP EDGES.

THIRD ANGLE PROJECTION

TOLERANCES
.X = ±.1
.XX = ±.01
.XXX = ±.005
X/XX = ±1/16
ANGLE = ±.5 DEG
MACHINED SURFACES 125
MACHINED INSIDE
RADII = .04 ±.02

REVISION APPROVAL RECORD				REV 0	
DISCIPLINE	BY	DATE	DISCIPLINE	BY	DATE
ARCH.	SF	9/19/16	MECHANICAL	DS	9/19/16
BUILDING SERVICES	N/A	N/A	PIPING	MJ	9/19/16
CIVIL	SF	9/19/16	PROCESS	MW	9/19/16
ELECTRICAL	CF	9/19/16	QA / QC	FB	9/19/16
ENVIRON.	N/A	N/A	STRUCTURAL	SF	9/19/16
GEN. ARRANG.	DJ	9/19/16			
I & C	HF	9/19/16			
HVAC	WL	9/19/16			

DRAWING STATUS				
ISSUED	REV	DATE	SDE	PEM
APPROVED FOR BID	0	9/19/16	DS	BGA

NOT APPROVED FOR CONSTRUCTION UNLESS SIGNED AND DATED. DESTROY ALL PRINTS BEARING EARLIER DATE AND/OR REV.NO.

AECOM
URS ENERGY & CONSTRUCTION Inc. - an AECOM Company
ATKINS
AREVA

AECOM PROJECT NO.: 31269

DWG NUMBER	TITLE
	DRAWING TRACEABILITY LIST

REF NUMBER	TITLE
NEXT USED ON	SHEET 1

REFERENCES

APROVED FOR BID
NOT FOR CONSTRUCTION

REV	DESCRIPTION	ORG	CHK	APVD	IDV	DATE
0	APPROVED FOR BID	RC	DJ	DS	DKC	9/19/16

REVISIONS

DLOG. NO. 202LP

INDEX NO. 1001

CAUTION
NOT COMPLETE WITHOUT CURRENT CHANGE DOCUMENTS FROM DATABASE

ATTENTION
DESTROY THIS DOCUMENT BY SHREDDING MAY CONTAIN SENSITIVE INFORMATION

NAME	DATE	COMPANY
DRAWN BY		
DRAFTING APPROVAL		
DISCIPLINE ENGINEER		
ENGINEER		

U.S. DEPARTMENT OF ENERGY
Office of River Protection

LAWPS
CFF FILTER MODULE CFF-P-03
FILTER FRAME ASSEMBLY DPD

SIZE F | DRAWING NUMBER H-16-001203 | SHEET 2 | REV 0

SCALE NOTED

PLOTID

DOE_16_7.DWG 9/27/16

DRAWING

H-16-001203-3

CFF FILTER MODULE CFF-P-03 FILTER FRAME ASSEMBLY DPD

NOTES:

FOR GENERAL NOTES AND PARTS LIST SEE SHEET 1.

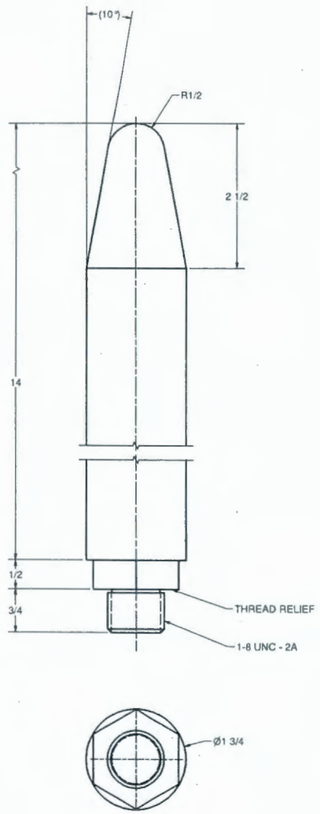

2 LONG GUIDE PIN
SCALE: 1/1

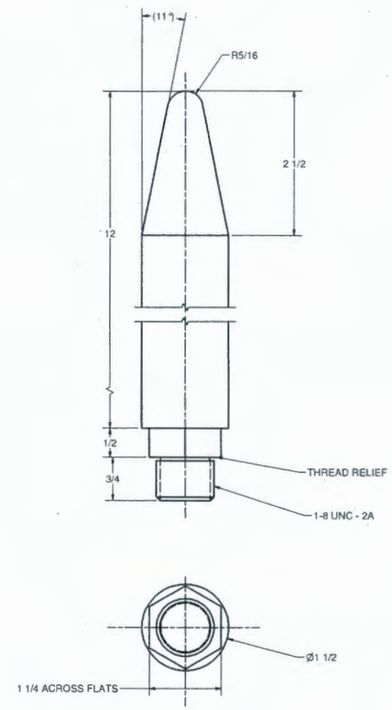

3 SHORT GUIDE PIN
SCALE: 1/1

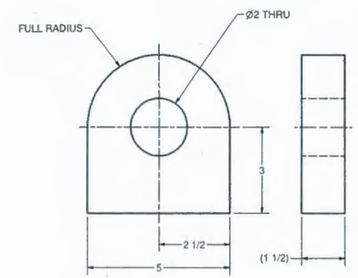

1 LIFTING BRACKET
SCALE: 1/2

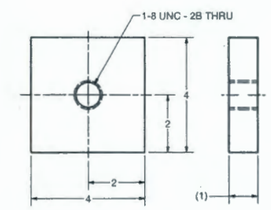

4 GUIDE PIN BRACKET
SCALE: 1/2

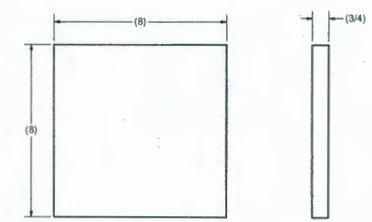

5 BASE PLATE
SCALE: 3/8

UNLESS OTHERWISE SPECIFIED

ALL DIMENSIONS ARE IN INCHES.
REMOVE BURRS & SHARP EDGES.

THIRD ANGLE PROJECTION

TOLERANCES
.X = ± .1
.XX = ± .01
.XXX = ± .005
X/XX = ± 1/16
ANGLE = ± .5 DEG
MACHINED SURFACES 125
MACHINED INSIDE RADII = .04 ±.02

REVISION APPROVAL RECORD				REV 0	
DISCIPLINE	BY	DATE	DISCIPLINE	BY	DATE
ARCH.	SF	9/19/16	MECHANICAL	DS	9/19/16
BUILDING SERVICES	N/A	N/A	PIPING	MJ	9/19/16
CIVIL	SF	9/19/16	PROCESS	MW	9/19/16
ELECTRICAL	CF	9/19/16	QA / QC	PB	9/19/16
ENVIRON.	N/A	N/A	STRUCTURAL	SF	9/19/16
GEN. ARRANG.	DJ	9/19/16			
I & C	HF	9/19/16			
HVAC	WL	9/19/16			

DRAWING STATUS				
ISSUED	REV	DATE	SDE	PEM
APPROVED FOR BID	0	9/19/16	DS	BGA

NOT APPROVED FOR CONSTRUCTION UNLESS SIGNED AND DATED. DESTROY ALL PRINTS BEARING EARLIER DATE AND/OR REV.NO.

AECOM
URS ENERGY & CONSTRUCTION Inc. - an AECOM Company
ATKINS
AREVA

AECOM PROJECT NO.: 31269

DWG NUMBER	TITLE
DRAWING TRACEABILITY LIST	

REF NUMBER	TITLE
NEXT USED ON	SHEET 1
REFERENCES	

APROVED FOR BID
NOT FOR CONSTRUCTION

REV	DESCRIPTION	ORG	CHK	APVD	IDV	DATE
0	APPROVED FOR BID	RC	DJ	DS	DKC	9/19/16

REV NO. | LIFECHIP REN
REVISIONS

BLDG. NO. 202LP
INDEX NO. 1001

CAUTION
NOT COMPLETE WITHOUT CURRENT CHANGE DOCUMENTS FROM DATABASE

ATTENTION
DESTROY THIS DOCUMENT BY SHREDDING MAY CONTAIN SENSITIVE INFORMATION

NAME	DATE	COMPANY
DRAWN BY		
3600°/942 APPROVAL		
DISCIPLINE ENGINEER		
ENGINEER		

U.S. DEPARTMENT OF ENERGY
Office of River Protection

LAWPS
CFF FILTER MODULE CFF-P-03
FILTER FRAME ASSEMBLY DPD

SIZE F | DRAWING NUMBER H-16-001203 | SHEET 3 | REV 0
SCALE NOTED
PLOTID

DRAWING

H-16-001204

CFF FILTER MODULE CFF-P-03 VALVE SKID ASSEMBLY DPD

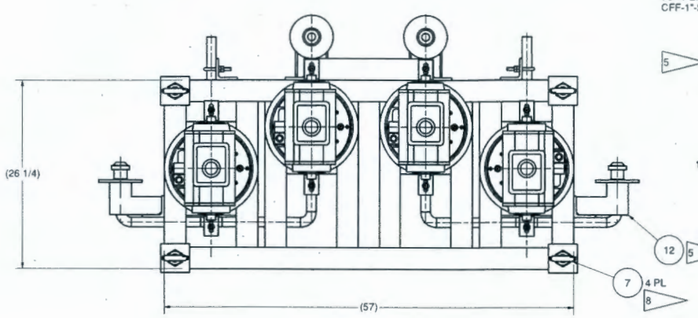

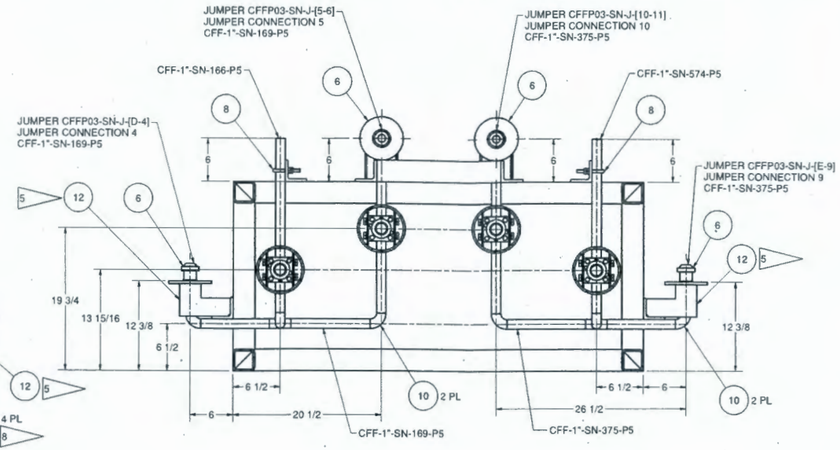

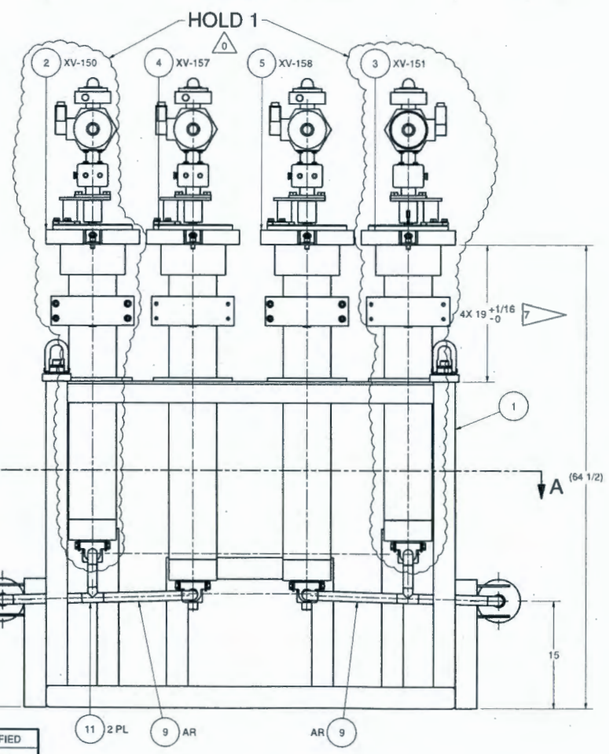

SECTION A-A

SCALE 1/8

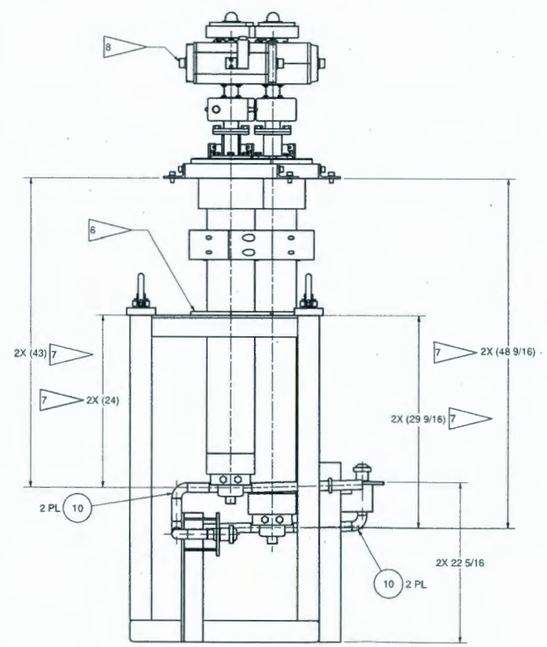

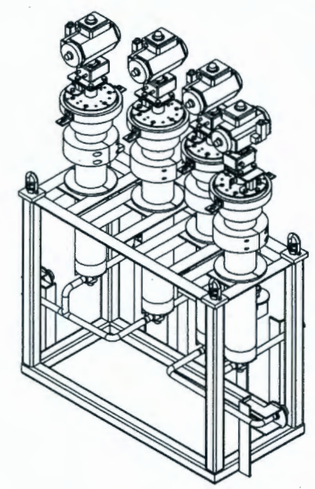

CFF FILTER MODULE CFF-P-03 VALVE SKID ASSEMBLY DPD

SCALE 1/8

PARTS/MATERIAL LIST

QL	QTY	PART/DRAWING NUMBER	NOMENCLATURE/DESCRIPTION	MATERIAL/REFERENCE	SH	ITEM
FQA	1	H-16-001205-01	CFF FILTER MODULE CFF-P-03, VALVE SKID FRAME ASSY DPD	N/A	1	1
FQA	1	H-16-001900-01	REMOTE VALVE SLEEVED ASSEMBLY, 202LP-CFA-CFF-XV-150	N/A	1	2
FQA	1	H-16-001900-01	REMOTE VALVE SLEEVED ASSEMBLY, 202LP-CFA-CFF-XV-151	N/A	1	3
FQA	1	H-16-001900-01	REMOTE VALVE SLEEVED ASSEMBLY, 202LP-CFA-CFF-XV-157	N/A	1	4
FQA	1	H-16-001900-01	REMOTE VALVE SLEEVED ASSEMBLY, 202LP-CFA-CFF-XV-158	N/A	1	5
FQA	4	H-16-001926-01	1" PUREX KICKOFF ASSEMBLY	N/A	1	6
CQA	4	(CL-2500-SHR-1-S)	SWIVEL HOIST RING, 3/4-10 UNC BOLT, 3500 LBS RATED LOAD, SST	(CARR-LANE)	1	7
FQA	2	(8889T33)	U-BOLT, 1 INCH PIPE, 3/8-16 THRD, WITH 4 NUTS, 304 SST	(MCMASTER-CARR)	1	8
FQA	AR	N/A	PIPE, 1 INCH, SCHED 40S, SMLS	ASTM A312 TP316/316L SST	1	9
FQA	8	N/A	ELBOW, 1 INCH, 90 DEG LR, SCHED 40	ASTM A403 WP316/316L-S SST	1	10
FQA	2	N/A	TEE, 1 INCH, SCHED 40	ASTM A403 WP316/316L-S SST	1	11
FQA	AR	N/A	PLATE, 1/4 THICK	ASTM A240 304L SST	1	12

GENERAL NOTES:

1. DIMENSIONS AND TOLERANCES ARE IN ACCORDANCE WITH ASME Y14.5M-1994.
2. APPROXIMATE WEIGHT OF ASSEMBLY IS 2,964 LBS.
3. DESIGN AND FABRICATION SHALL BE IN ACCORDANCE WITH CROSS FLOW FILTER SYSTEM PROCUREMENT SPECIFICATION 15-2-001.
4. ALL MATERIAL SIZE AND THICKNESS SHOWN, EXCLUDING PROCESS PIPE ARE REFERENCE ONLY. ACTUAL SIZE AND THICKNESS TO BE DETERMINED DURING DESIGN.

5 STIFFEN PUREX NOZZLES WITH GUSSET PLATES AS REQUIRED.

6 RING AROUND VALVE TO BE WELDED TO VALVE BODY DURING VALVE INSTALLATION INTO FRAME. SHIMMING WILL NOT BE REQUIRED BECAUSE EACH SUPPORT RING WILL BE INDIVIDUALLY LOCATED.

7 VALVE DIMENSIONS SHALL BE DETERMINED BY VALVE DPD DRAWING. ADJUST PIPING AS REQUIRED TO ENSURE CRITICAL DIMENSION FROM TOP OF FRAME TO TOP OF VALVE ASSEMBLY.

8 WHEN LIFTING ASSEMBLY VALVE ACUTATORS, SHIELD PLUGS, AND VALVE SHAFTS SHALL BE REMOVED.

9. U-BOLTS ARE ALL NON-GRIPPING WITH 1/16 INCH GAP.

HOLD TABLE

HOLD NO	DESCRIPTION	RELEASE DATE
1	BACKPULSE IMPLEMENTATION TO BE DETERMINED BASED ON TESTING RESULTS	BY VENDOR ON APPROVAL BY BUYER

UNLESS OTHERWISE SPECIFIED

ALL DIMENSIONS ARE IN INCHES. REMOVE BURRS & SHARP EDGES.

THIRD ANGLE PROJECTION

TOLERANCES
.X = ±.1
.XX = ±.01
.XXX = ±.005
X/XX = ±1/18
ANGLE = ±.5 DEG
MACHINED SURFACES 125
MACHINED INSIDE RADII = .04 ±.02

REVISION APPROVAL RECORD — REV 0

DISCIPLINE	BY	DATE	DISCIPLINE	BY	DATE
ARCH.	SF	9/19/16	MECHANICAL	DS	9/19/16
BUILDING SERVICES	N/A	N/A	PIPING	MJ	9/19/16
CIVIL	SF	9/19/16	PROCESS	MW	9/19/16
ELECTRICAL	CF	9/19/16	QA / QC	PB	9/19/16
ENVIRON.	N/A	N/A	STRUCTURAL	SF	9/19/16
GEN. ARRANG.	DJ	9/19/16			
I & C	HF	9/19/16			
HVAC	WL	9/19/16			

DRAWING STATUS

ISSUED	REV	DATE	SDE	PEM
APPROVED FOR BID	0	9/19/16	DS	BGA

NOT APPROVED FOR CONSTRUCTION UNLESS SIGNED AND DATED. DESTROY ALL PRINTS BEARING EARLIER DATE AND/OR REV.NO.

AECOM
URS ENERGY & CONSTRUCTION Inc. - an AECOM Company
ATKINS
AREVA

AECOM PROJECT NO.: 31269

DWG NUMBER	TITLE
H-16-000023	P&ID CROSS FLOW FILTER PIT

DRAWING TRACEABILITY LIST

REF NUMBER	TITLE
NEXT USED ON	H-16-001201-01

REFERENCES

REV NO.	DESCRIPTION
0	APPROVED FOR BID

REVISIONS

REV	DESCRIPTION	ORG	CHK	APVD	IDV	DATE
0	APPROVED FOR BID	RC	DJ	DS	DKC	9/19/16

APROVED FOR BID
NOT FOR CONSTRUCTION

BLDG. NO. 202LP

INDEX NO. 8405 8409

CAUTION
NOT COMPLETE WITHOUT CURRENT CHANGE DOCUMENTS FROM DATABASE

ATTENTION
DESTROY THIS DOCUMENT BY SHREDDING MAY CONTAIN SENSITIVE INFORMATION

NAME	DATE	COMPANY
DRAWN BY		
DESIGN APPROVAL		
DESIGN LEAD ENGINEER		
ENGINEER		

U.S. DEPARTMENT OF ENERGY
Office of River Protection

LAWPS
CFF FILTER MODULE CFF-P-03
VALVE SKID ASSEMBLY DPD

SIZE F | DRAWING NUMBER H-16-001204 | SHEET 1 | REV 0

SCALE NOTED

PLOTTED

DOC_15_F.DWG (NOV 2015)

DRAWING

H-16-001205

CFF FILTER MODULE CFF-P-03 VALVE SKID FRAME ASSEMBLY DPD

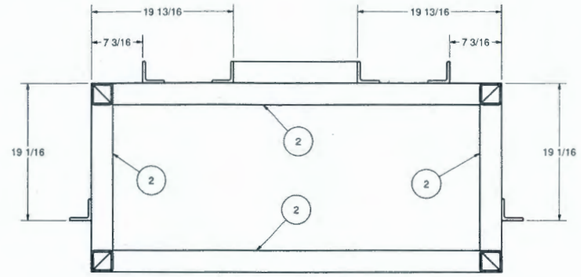

SECTION A-A
SCALE 1/8

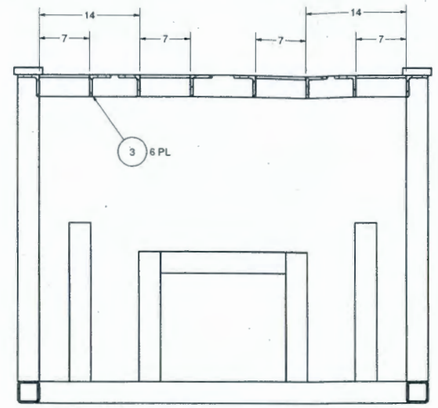

SECTION B-B
SCALE 1/8

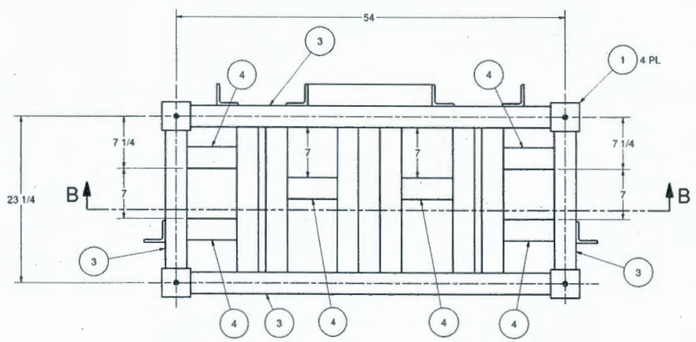

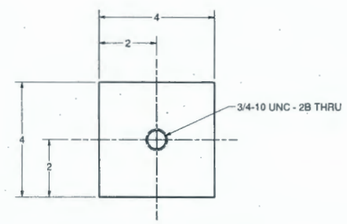

1 LIFTING BRACKET
SCALE: 1/1

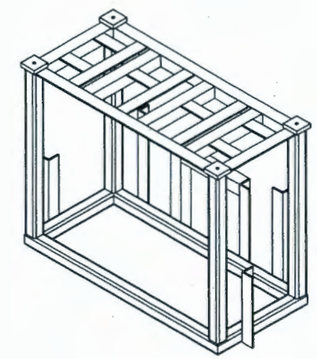

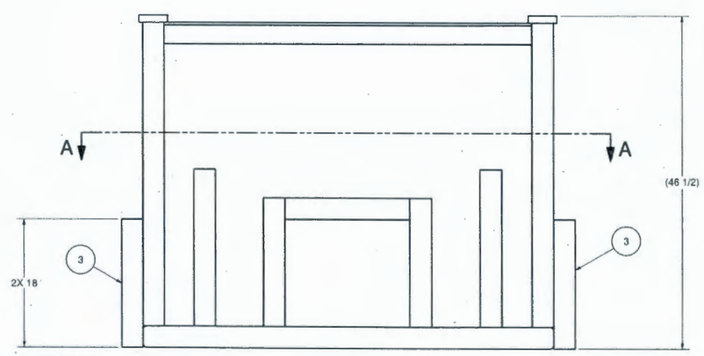

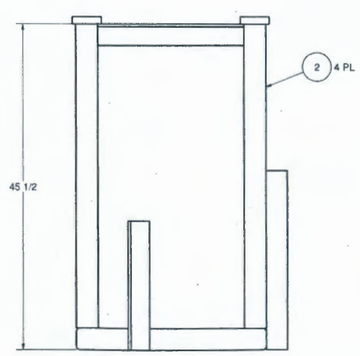

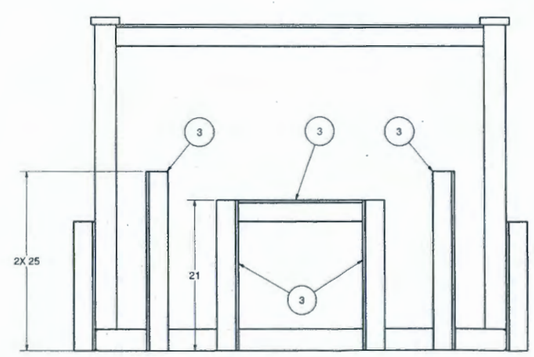

PARTS/MATERIAL LIST

QL	QTY	PART/DRAWING NUMBER	NOMENCLATURE/DESCRIPTION	MATERIAL/REFERENCE	SH	ITEM
FQA	4	N/A	LIFTING BRACKET, 1 INCH THICK	ASTM A276 304L SST	1	1
FQA	AR	N/A	HSS, 3 X 3 X 1/4 THICK	ASTM A554 304L SST	1	2
FQA	AR	N/A	ANGLE, 3 X 3 X 3/8 THICK	ASTM A276 304L SST	1	3
FQA	AR	N/A	FLAT BAR, 3 WIDE X 3/8 THICK	ASTM A276 304 SST	1	4

GENERAL NOTES:

1. DIMENSIONS AND TOLERANCES ARE IN ACCORDANCE WITH ASME Y14.5M-1994.
2. APPROXIMATE WEIGHT OF ASSEMBLY IS 525 LBS.
3. DESIGN AND FABRICATION SHALL BE IN ACCORDANCE WITH CROSS FLOW FILTER SYSTEM PROCUREMENT SPECIFICATION 15-2-001.
4. ALL MATERIAL SIZE AND THICKNESS SHOWN ARE REFERENCE ONLY. ACTUAL SIZE AND THICKNESS TO BE DETERMINED DURING DESIGN.

CFF FILTER MODULE CFF-P-03 VALVE SKID FRAME ASSY DPD
SCALE 1/8

UNLESS OTHERWISE SPECIFIED
ALL DIMENSIONS ARE IN INCHES.
REMOVE BURRS & SHARP EDGES.
THIRD ANGLE PROJECTION
TOLERANCES
.X = ±.1
.XX = ±.01
.XXX = ±.005
X/XX = ±1/16
ANGLE = ±.5 DEG
MACHINED SURFACES 125
MACHINED INSIDE
RADII = .04 ±.02

REVISION APPROVAL RECORD — REV 0

DISCIPLINE	BY	DATE	DISCIPLINE	BY	DATE
ARCH.	SF	9/19/16	MECHANICAL	DS	9/19/16
BUILDING SERVICES	N/A	N/A	PIPING	MJ	9/19/16
CIVIL	SF	9/19/16	PROCESS	MW	9/19/16
ELECTRICAL	CF	9/19/16	QA / QC	PB	9/19/16
ENVIRON.	N/A	N/A	STRUCTURAL	SF	9/19/16
GEN. ARRANG.	DJ	9/19/16			
I & C	HF	9/19/16			
HVAC	WL	9/19/16			

DRAWING STATUS

ISSUED	REV	DATE	SDE	PEM
APPROVED FOR BID	0	9/19/16	DS	BGA

NOT APPROVED FOR CONSTRUCTION UNLESS SIGNED AND DATED. DESTROY ALL PRINTS BEARING EARLIER DATE AND/OR REV.NO.

AECOM
URS ENERGY & CONSTRUCTION Inc. - an AECOM Company
ATKINS
AREVA
AECOM PROJECT NO.: 31269

DRAWING TRACEABILITY LIST

DWG NUMBER	TITLE

REFERENCES

REF NUMBER	TITLE

NEXT USED ON H-16-001204-01

APROVED FOR BID
NOT FOR CONSTRUCTION

REVISIONS

REV	DESCRIPTION	ORG	CHK	APVD	IDV	DATE
0	APPROVED FOR BID	RC	DJ	DS	DKC	9/19/16

BLDG. NO. 202LP
INDEX NO. 1001

CAUTION
NOT COMPLETE WITHOUT CURRENT CHANGE DOCUMENTS FROM DATABASE

ATTENTION
DESTROY THIS DOCUMENT BY SHREDDING MAY CONTAIN SENSITIVE INFORMATION

NAME	DATE	COMPANY
DRAWN BY		
DRAFTING APPROVAL		
DISCIPLINE ENGINEER		
ENGINEER		

U.S. DEPARTMENT OF ENERGY
Office of River Protection
LAWPS
CFF FILTER MODULE CFF-P-03
VALVE SKID FRAME ASSY DPD

SIZE F | DRAWING NUMBER H-16-001205 | SHEET 1 | REV 0
SCALE NOTED
PLOTID

DRAWING

H-16-001206-1

CFF FILTER MODULE CFF-P-03 CFF-EXCH-104 ASSEMBLY DPD

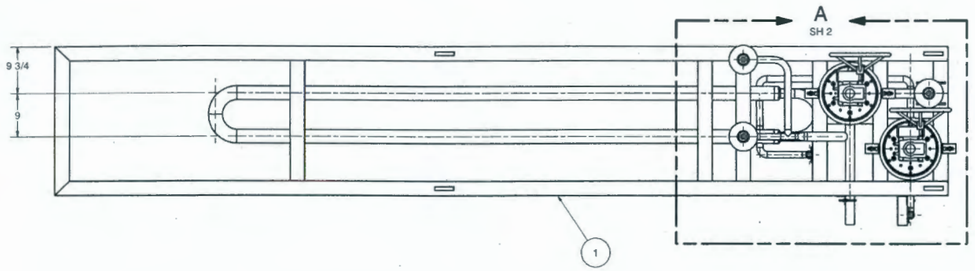

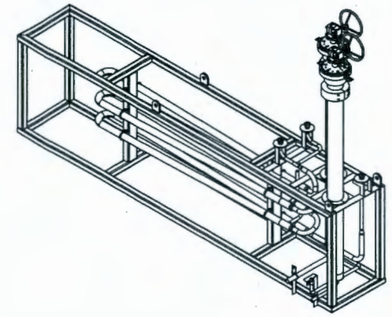

PARTS/MATERIAL LIST

QL	QTY	PART/DRAWING NUMBER	NOMENCLATURE/DESCRIPTION	MATERIAL/REFERENCE	SH	ITEM
FQA	1	H-16-001207-01	CFF-EXCH-104 FRAME ASSY DPD	N/A	1	1
FQA	1	H-16-001900-01	PLUG VALVE, 1 INCH, XOMOX, 202LP-CFA-CFF-VLR-128	N/A	1	2
FQA	1	H-16-001900-01	PLUG VALVE, 1 1/2 INCH, XOMOX, 202LP-CFA-CFF-VLR-129	N/A	1	3
FQA	3	H-16-001926-01	1" PUREX KICKOFF ASSEMBLY	N/A	2	4
FQA	2	(B2400-1-SS6)	STANDARD PIPE STRAP, 1 INCH PIPE, 316 SST	(COOPER B-LINE)	1	5
FQA	1	(8896T107)	U-BOLT, 1 1/2 INCH PIPE, 1/4-20 UNC , W/4 NUTS, 304 SST	(MCMASTER-CARR)	1	6
FQA	12	(29605T46)	U-BOLT, 2 1/2 INCH PIPE, 1/2-13 UNC, W/ 4 NUTS, 316 SST	(MCMASTER-CARR)	3	7
FQA	9	N/A	ELBOW, 1 INCH LR 90 DEG SCHED 40	ASTM A403 WP316/316L-S SST	1	8
FQA	1	N/A	ELBOW, 1 1/2 INCH PIPE, SR 90 SCHED 40	ASTM A403 WP316/316L-SST	3	9
FQA	12	N/A	PIPE, 2 1/2 INCH SCHED 40S SMLS, (ROLLED TO FIT)	ASTM A312 TP316/316L SST	3	10
FQA	6	N/A	PIPE CAP, 2 1/2 INCH SCHED 40	ASTM A403 WP316/316L-S SST	2	11
FQA	2	N/A	REDUCER, 1 1/2 X 1 INCH, SCHED 40	ASTM A403 WP316/316L-S SST	2	12
FQA	1	N/A	TEE, 1 INCH SCHED 40S BW	ASTM A403 WP316/316L-S SST	2	13
FQA	6	N/A	TEE, REDUCING OUTLET 2 1/2 X 1, SCHED 40	ASTM A403 WP316/316L-S SST	2	14
FQA	AR	N/A	PIPE, 1 INCH SCHED 40S, SMLS	ASTM A312 TP316/316L SST	1	15
FQA	AR	N/A	PIPE, 1 1/2 INCH SCHED 40S, SMLS	ASTM A312 TP316/316L SST	2	16
FQA	AR	N/A	PIPE, 2 1/2 INCH SCHED 40S, SMLS	ASTM A312 TP316/316L SST	3	17
FQA	AR	N/A	FLAT BAR, 3/8 THK	ASTM A276 304L SST	3	18
FQA	AR	N/A	FLAT BAR, 1 WIDE X 3/16 THICK	ASTM A276 304L SST	3	19
FQA	4	N/A	BOLT, HEX HD 1/4-20 UNC-2A X 3/4 LG	ASTM A193 GR B8M CL 2 SST	1	20
FQA	4	N/A	NUT, HEX HD 1/4-20 UNC-2B	ASTM A194 GR 8M SST	1	21
FQA	1	(8889T43)	U-BOLT, 1 INCH PIPE, 1/4-20 UNC, W/ 4 NUTS, 304 SST	(MCMASTER-CARR)	1	22

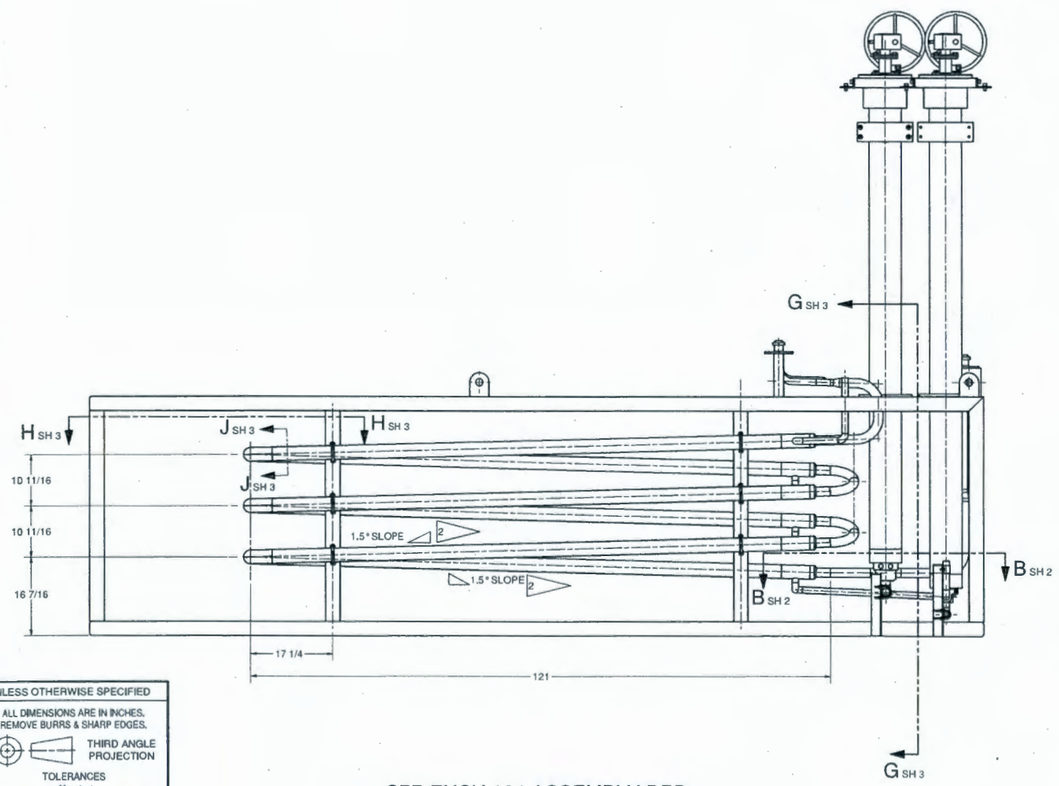

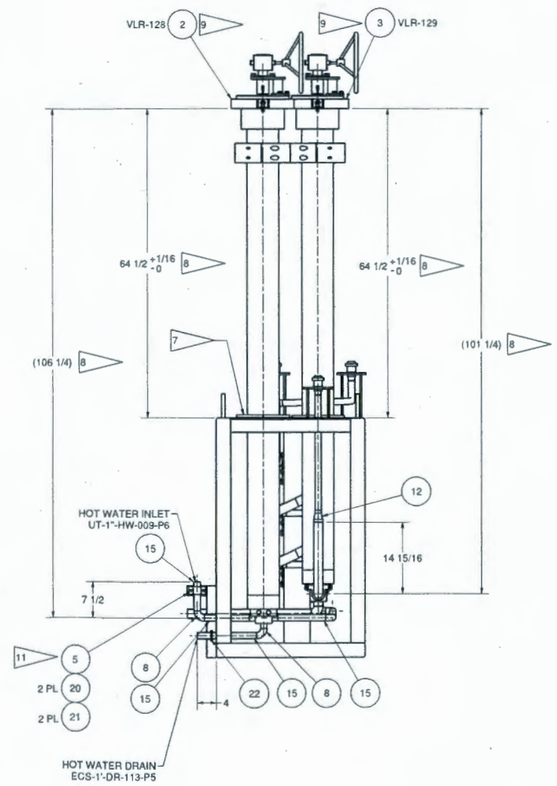

GENERAL NOTES:

1. DIMENSIONS AND TOLERANCES ARE IN ACCORDANCE WITH ASME Y14.5M-1994.
2. SLOPE LINE 1.5 ±1 DEGREES IN DIRECTION SHOWN.
3. APPROXIMATE WEIGHT = 2,500 LBS.
4. DESIGN AND FABRICATION SHALL BE IN ACCORDANCE WITH CROSS FLOW FILTER SYSTEM PROCUREMENT SPECIFICATION 15-2-001.
5. ALL MATERIAL SIZE AND THICKNESS SHOWN, EXCLUDING PROCESS PIPING ARE REFERENCE ONLY. ACTUAL SIZE AND THICKNESS TO BE DETERMINED DURING DESIGN.
6. STIFFEN PUREX NOZZLES WITH FLAT BAR AS REQUIRED.
7. RING AROUND VALVE TO BE WELDED TO VALVE BODY DURING VALVE INSTALLATION INTO FRAME. SHIMMING WILL NOT BE REQUIRED BECAUSE EACH SUPPORT RING WILL BE INDIVIDUALLY LOCATED.
8. VALVE DIMENSIONS SHALL BE DETERMINED BY VALVE DPD DRAWING. ADJUST PIPING AS REQUIRED TO ENSURE CRITICAL DIMENSION FROM TOP OF FRAME TO TOP OF VALVE ASSEMBLY.
9. WHEN LIFTING ASSEMBLY VALVE ACUTATORS, SHIELD PLUGS, AND VALVE SHAFTS SHALL BE REMOVED.
10. INSTALL FLAT BAR AS SPACER BETWEEN PIPE IN PIPE AS REQUIRED TO CENTER PIPE.
11. PIPE STRAPS ARE GRIP ANCHORS. WELD LUGS TO PIPE ON BOTH SIDES OF STRAP TO ANCHOR IN ALL DIRECTIONS.
12. U-BOLTS ARE ALL NON-GRIPPING WITH 1/16 INCH GAP.

CFF-EXCH 104 ASSEMBLY DPD

SCALE 1/12

UNLESS OTHERWISE SPECIFIED

ALL DIMENSIONS ARE IN INCHES.
REMOVE BURRS & SHARP EDGES.

THIRD ANGLE PROJECTION

TOLERANCES
.X = ±.1
.XX = ±.01
.XXX = ±.005
X/XX = ±1/16
ANGLE = ±.5 DEG
MACHINED SURFACES 125
MACHINED INSIDE
RADII = .04 ±.02

REVISION APPROVAL RECORD				REV 0	
DISCIPLINE	BY	DATE	DISCIPLINE	BY	DATE
ARCH.	SF	9/19/16	MECHANICAL	DS	9/19/16
BUILDING SERVICES	N/A	N/A	PIPING	MJ	9/19/16
CIVIL	SF	9/19/16	PROCESS	MW	9/19/16
ELECTRICAL	CF	9/19/16	QA / QC	PB	9/19/16
ENVIRON.	N/A	N/A	STRUCTURAL	SF	9/19/16
GEN. ARRANG.	DJ	9/19/16			
I & C	HF	9/19/16			
HVAC	WL	9/19/16			

DRAWING STATUS				
ISSUED	REV	DATE	SDE	PEM
APPROVED FOR BID	0	9/19/16	DS	BGA

NOT APPROVED FOR CONSTRUCTION UNLESS SIGNED AND DATED. DESTROY ALL PRINTS BEARING EARLIER DATE AND/OR REV.NO.

AECOM
URS ENERGY & CONSTRUCTION Inc. - an AECOM Company
ATKINS
AREVA

AECOM PROJECT NO.: 31269

DWG NUMBER	TITLE
DRAWING TRACEABILITY LIST	

REF NUMBER	TITLE
H-16-000023	P&ID CROSS FLOW FILTER PIT
REFERENCES	
NEXT USED ON	H-16-001201-01

APROVED FOR BID
NOT FOR CONSTRUCTION

REV NO.	DESCRIPTION	ORG	CHK	APVD	IDV	DATE
0	APPROVED FOR BID	RC	DJ	DS	DKC	9/19/16
REVISIONS						

BLDG. NO. 202LP

INDEX NO. 8405 8409 8516

CAUTION
NOT COMPLETE WITHOUT CURRENT CHANGE DOCUMENTS FROM DATABASE

ATTENTION
DESTROY THIS DOCUMENT BY SHREDDING MAY CONTAIN SENSITIVE INFORMATION

NAME	DATE	Company
DRAWN BY		
DRAFTING APPROVAL		
DISCIPLINE ENGINEER		
ENGINEER		

U.S. DEPARTMENT OF ENERGY
Office of River Protection

LAWPS
CFF FILTER MODULE CFF-P-03
CFF-EXCH-104 ASSEMBLY DPD

SIZE	DRAWING NUMBER	SHEET	REV
F	H-16-001206	1	0

SCALE NOTED

PLOTID

9/20_16_F.DWG 9-NOV-2016

DRAWING

H-16-001206-2

CFF FILTER MODULE CFF-P-03 CFF-EXCH-104 ASSEMBLY DPD

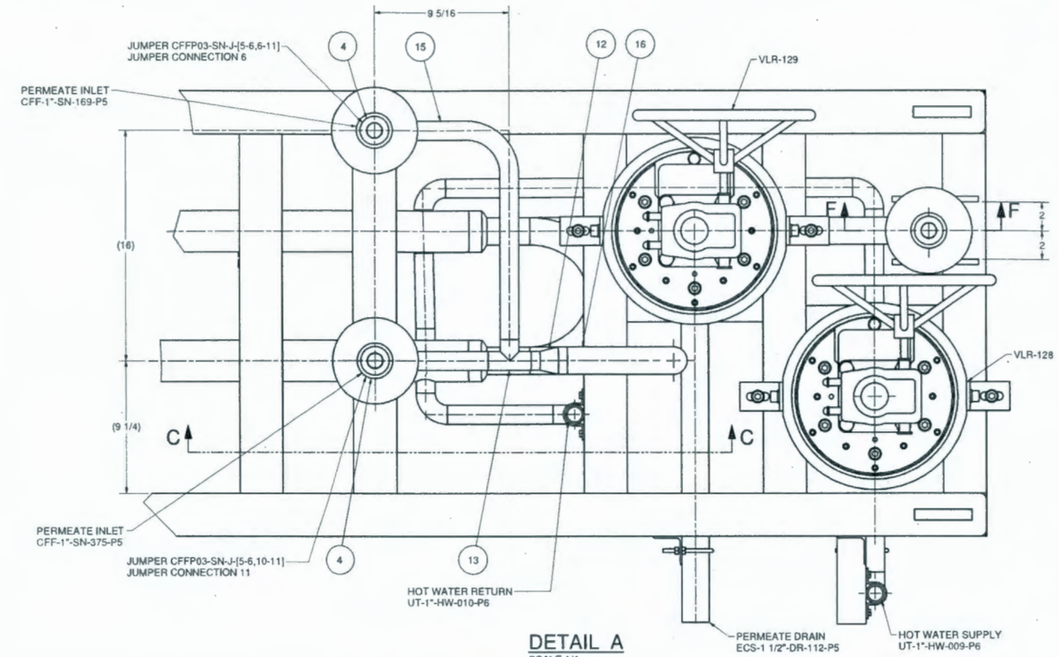

DETAIL A
SCALE 1/4
SHEET 1

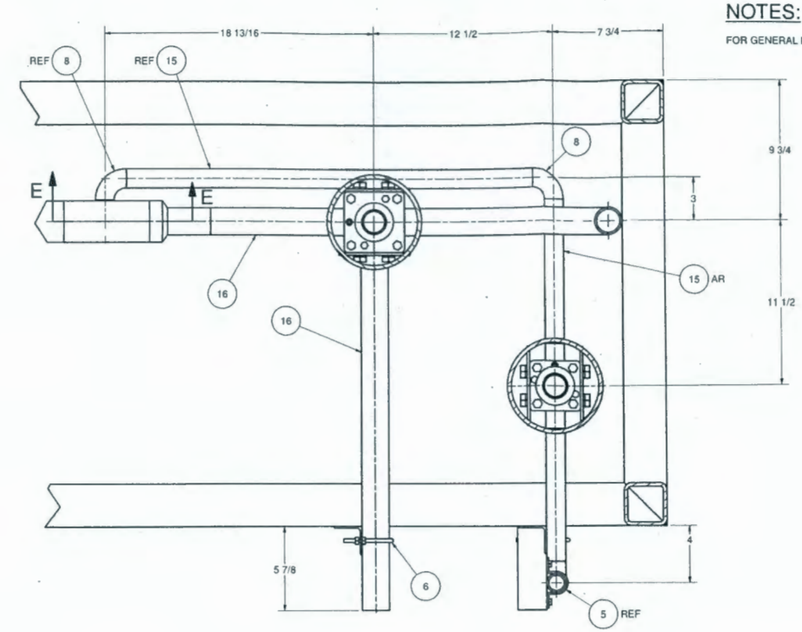

NOTES:
FOR GENERAL NOTES AND PARTS LIST SEE SHEET 1.

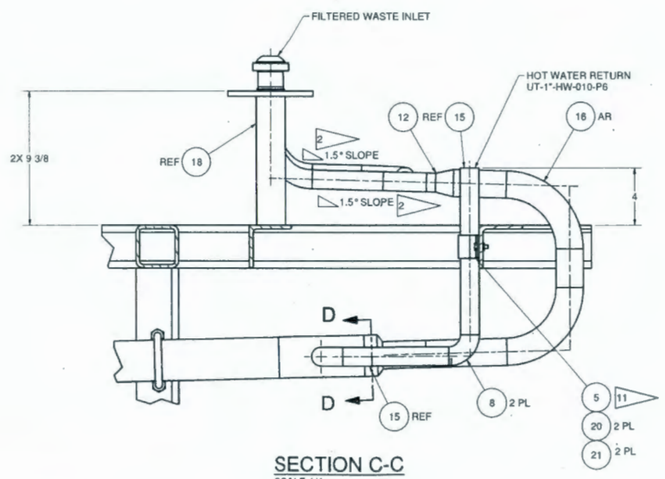

SECTION C-C
SCALE 1/4

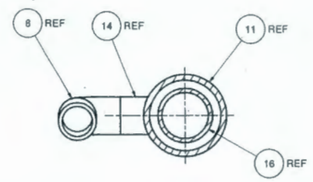

SECTION D-D
SCALE 1/2

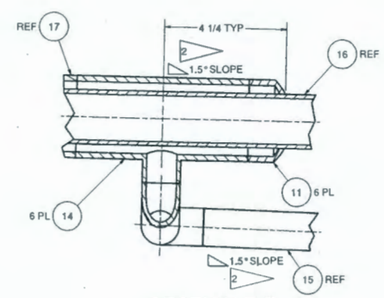

SECTION E-E
SCALE 1/2

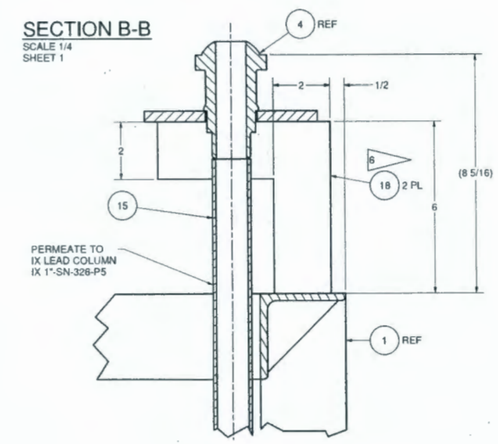

SECTION B-B
SCALE 1/4
SHEET 1

SECTION F-F
SCALE 1/2

UNLESS OTHERWISE SPECIFIED
ALL DIMENSIONS ARE IN INCHES.
REMOVE BURRS & SHARP EDGES.
THIRD ANGLE PROJECTION
TOLERANCES
.X = ±.1
.XX = ±.01
.XXX = ±.005
X/XX = ±1/16
ANGLE = ±.5 DEG
MACHINED SURFACES 125
MACHINED INSIDE
RADII = .04 ±.02

REVISION APPROVAL RECORD				REV 0	
DISCIPLINE	BY	DATE	DISCIPLINE	BY	DATE
ARCH.	SF	9/19/16	MECHANICAL	DS	9/19/16
BUILDING SERVICES	N/A	N/A	PIPING	MJ	9/19/16
CIVIL	SF	9/19/16	PROCESS	MW	9/19/16
ELECTRICAL	CF	9/19/16	QA / QC	PB	9/19/16
ENVIRON.	N/A	N/A	STRUCTURAL	SF	9/19/16
GEN. ARRANG.	DJ	9/19/16			
I & C	HF	9/19/16			
HVAC	WL	9/19/16			

DRAWING STATUS				
ISSUED	REV	DATE	SDE	PEM
APPROVED FOR BID	0	9/19/16	DS	BGA

NOT APPROVED FOR CONSTRUCTION UNLESS SIGNED AND DATED. DESTROY ALL PRINTS BEARING EARLIER DATE AND/OR REV.NO.

AECOM
URS ENERGY & CONSTRUCTION Inc. - an AECOM Company
ATKINS
AREVA

AECOM PROJECT NO.: 31269

DWG NUMBER	TITLE	REF NUMBER	TITLE
			REFERENCES
DRAWING TRACEABILITY LIST		NEXT USED ON	SHEET 1

APROVED FOR BID
NOT FOR CONSTRUCTION

REV	DESCRIPTION	ORG	CHK	APVD	IDV	DATE
0	APPROVED FOR BID	RC	DJ	DS	DKC	9/19/16

REVISIONS

BLDG. NO. 202LP
INDEX NO. 8400 8409

CAUTION
NOT COMPLETE WITHOUT CURRENT CHANGE DOCUMENTS FROM DATABASE

ATTENTION
DESTROY THIS DOCUMENT BY SHREDDING
MAY CONTAIN SENSITIVE INFORMATION

NAME	DATE	COMPANY
DRAWN BY		
CHECKED APPROVAL		
DISCIPLINE ENGINEER		
ENGINEER		

U.S. DEPARTMENT OF ENERGY
Office of River Protection

LAWPS
CFF FILTER MODULE CFF-P-03
CFF-EXCH-104 ASSEMBLY DPD

SIZE F | DRAWING NUMBER H-16-001206 | SHEET 2 | REV 0
SCALE NOTED
PLOTID

DRAWING

H-16-001206-3

CFF FILTER MODULE CFF-P-03 CFF-EXCH-104 ASSEMBLY DPD

NOTES:

FOR GENERAL NOTES AND PARTS LIST SEE SHEET 1.

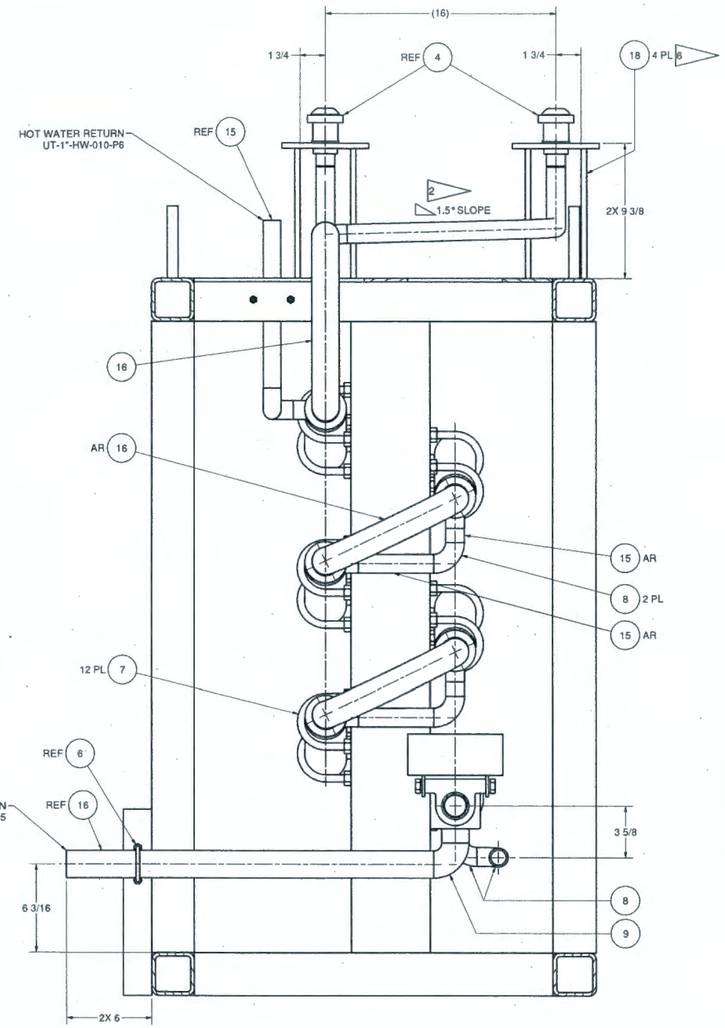

SECTION G-G

SCALE 1/4
SHEET 1
SOME ITEMS REMOVED FOR CLARITY

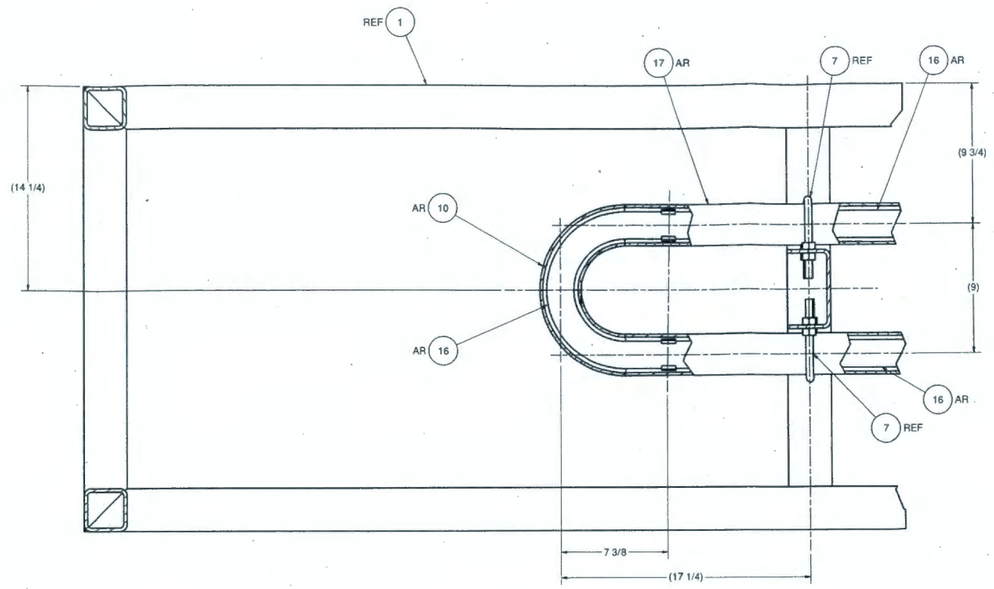

SECTION H-H

SCALE 1/4
SHEET 1

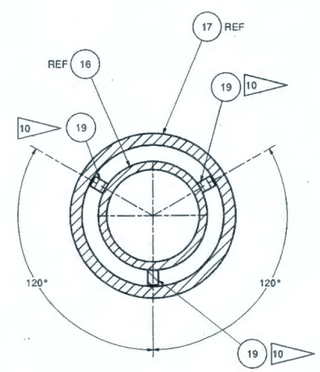

SECTION J-J

SCALE 1/1
SHEET 1

UNLESS OTHERWISE SPECIFIED

ALL DIMENSIONS ARE IN INCHES.
REMOVE BURRS & SHARP EDGES.

THIRD ANGLE PROJECTION

TOLERANCES
.X = ±.1
.XX = ±.01
.XXX = ±.005
X/XX = ±1/16
ANGLE = ±.5 DEG
MACHINED SURFACES 125
MACHINED INSIDE
RADII = .04 ±.02

REVISION APPROVAL RECORD				REV 0	
DISCIPLINE	BY	DATE	DISCIPLINE	BY	DATE
ARCH.	SF	9/19/16	MECHANICAL	DS	9/19/16
BUILDING SERVICES	N/A	N/A	PIPING	MJ	9/19/16
CIVIL	SF	9/19/16	PROCESS	MW	9/19/16
ELECTRICAL	CF	9/19/16	QA / QC	PB	9/19/16
ENVIRON.	N/A	N/A	STRUCTURAL	SF	9/19/16
GEN. ARRANG.	DJ	9/19/16			
I & C	HF	9/19/16			
HVAC	WL	9/19/16			

DRAWING STATUS				
ISSUED	REV	DATE	SDE	PEM
APPROVED FOR BID	0	9/19/16	DS	BGA

NOT APPROVED FOR CONSTRUCTION UNLESS SIGNED AND DATED. DESTROY ALL PRINTS BEARING EARLIER DATE AND/OR REV.NO.

AECOM
URS ENERGY & CONSTRUCTION Inc. - an AECOM Company
ATKINS
AREVA

AECOM PROJECT NO.: 31269

DWG NUMBER	TITLE

DRAWING TRACEABILITY LIST

REF NUMBER	TITLE

REFERENCES

NEXT USED ON SHEET 1

APROVED FOR BID
NOT FOR CONSTRUCTION

REV NO.	DESCRIPTION					
0	APPROVED FOR BID	RC	DJ	DS	DKC	9/19/16
REV	DESCRIPTION	ORG	CHK	APVD	IDV	DATE

REVISIONS

BLDG. NO. 202LP

INDEX NO. 8400 8409

CAUTION
NOT COMPLETE WITHOUT CURRENT CHANGE DOCUMENTS FROM DATABASE

ATTENTION
DESTROY THIS DOCUMENT BY SHREDDING
MAY CONTAIN SENSITIVE INFORMATION

NAME	DATE	COMPANY
DRAWN BY		
DESIGNED APPROVAL		
DISCIPLINE ENGINEER		
ENGINEER		

U.S. DEPARTMENT OF ENERGY
Office of River Protection

LAWPS
CFF FILTER MODULE CFF-P-03
CFF-EXCH-104 ASSEMBLY DPD

SIZE	DRAWING NUMBER	SHEET	REV
F	H-16-001206	3	0

SCALE NOTED

PLOTID

DOE_TB_7.DWG (NOV 27 9)

DRAWING

H-16-001207

CFF FILTER MODULE CFF-P-03 CFF-EXCH-104 FRAME ASSEMBLY DPD

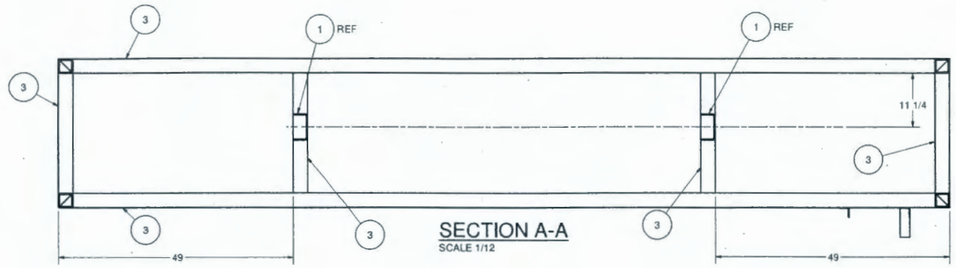

SECTION A-A
SCALE 1/12

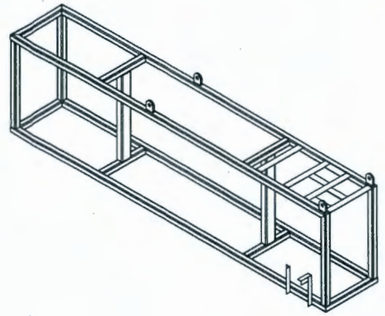

PARTS/MATERIAL LIST

QL	QTY	PART/DRAWING NUMBER	NOMENCLATURE/DESCRIPTION	MATERIAL/REFERENCE	SH	ITEM
FQA	2	N/A	CENTRAL FRAME COLUMN, PLATE 1/4 THK	ASTM A240 304L SST	1	1
FQA	4	N/A	LIFTING LUG, PLATE 3/4 THK	ASTM A240 304L SST	1	2
FQA	AR	N/A	HSS, 3 X 3 X 1/4	ASTM A554 304 SST	1	3
FQA	AR	N/A	L 2 X 2 X 1/8	ASTM A276 304L SST	1	4
FQA	AR	N/A	L 3 X 3 X 1/4	ASTM A276 304L SST	1	5
FQA	AR	N/A	FLAT BAR, 3 WIDE X 1/4 THK	ASTM A276 304L SST	1	6
FQA	AR	N/A	FLAT BAR, 3 7/16 WIDE X 1/4 THK	ASTM A276 304L SST	1	7

GENERAL NOTES:

1. DIMENSIONS AND TOLERANCES ARE IN ACCORDANCE WITH ASME Y14.5M-1994.
2. APPROXIMATE WEIGHT OF ASSEMBLY = 970 LBS.
3. DESIGN AND FABRICATION SHALL BE IN ACCORDANCE WITH CROSS FLOW FILTER SYSTEM PROCUREMENT SPECIFICATION 15-2-001.
4. ALL MATERIAL SIZE AND THICKNESS SHOWN ARE REFERENCE ONLY. ACTUAL SIZE AND THICKNESS TO BE DETERMINED DURING DESIGN.

5 FLAT BAR TO BE INSTALLED AFTER VALVE INSTALLATION TO ENSURE FIT-UP AND ALIGNMENT OF VALVE ASSEMBLY.

6 FINAL LOCATION OF LIFTING LUG TO BE DETERMINED BY ACTUAL BALANCE LOCATION OF FINISHED ASSEMBLY WITH ALL EQUIPMENT LOCATED IN FRAME.

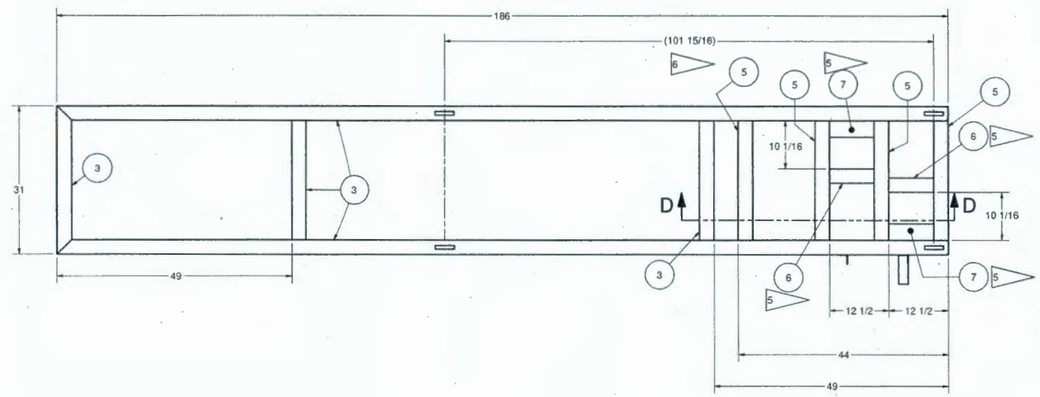

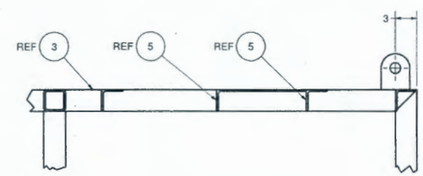

SECTION D-D
SCALE 1/8

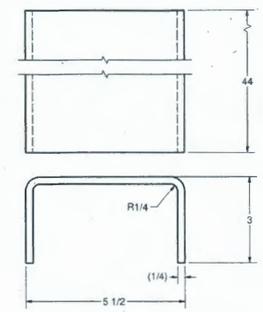

1 CENTRAL FRAME COLUMN
SCALE: 1/4

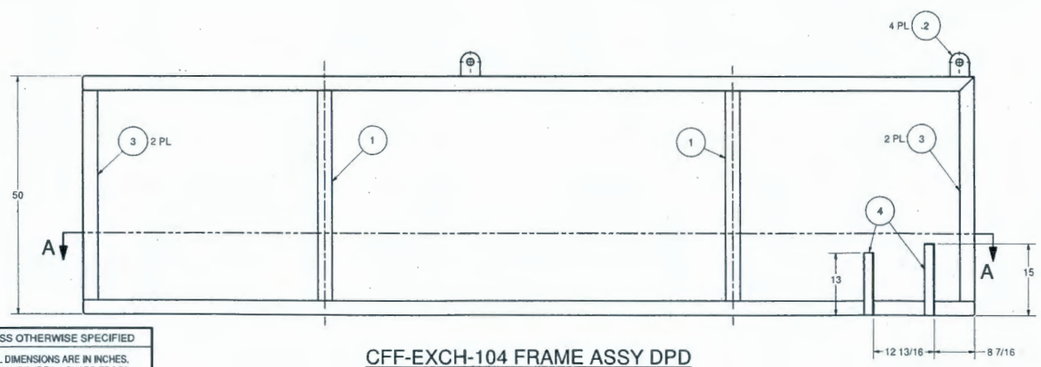

CFF-EXCH-104 FRAME ASSY DPD
SCALE 1/12

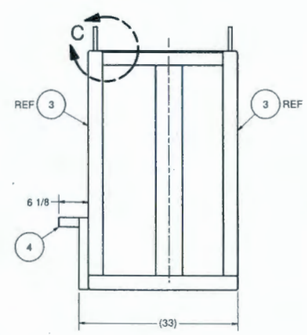

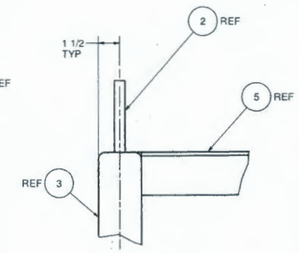

DETAIL C
SCALE 1/4

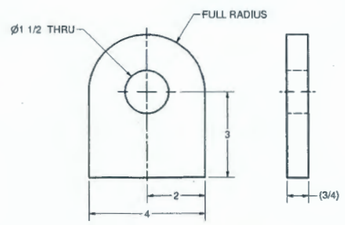

2 LIFTING LUG
SCALE: 1:1

UNLESS OTHERWISE SPECIFIED
ALL DIMENSIONS ARE IN INCHES.
REMOVE BURRS & SHARP EDGES.
THIRD ANGLE PROJECTION
TOLERANCES
.X = ±.1
.XX = ±.01
.XXX = ±.005
X/XX = ±1/16
ANGLE = ±.5 DEG
MACHINED SURFACES 125
MACHINED INSIDE
RADII = .04 ±.02

REVISION APPROVAL RECORD				REV 0	
DISCIPLINE	BY	DATE	DISCIPLINE	BY	DATE
ARCH.	SF	9/19/16	MECHANICAL	DS	9/19/16
BUILDING SERVICES	N/A	N/A	PIPING	MJ	9/19/16
CIVIL	SF	9/19/16	PROCESS	MW	9/19/16
ELECTRICAL	CF	9/19/16	QA / QC	PB	9/19/16
ENVIRON.	N/A	N/A	STRUCTURAL	SF	9/19/16
GEN. ARRANG.	DJ	9/19/16			
I & C	HF	9/19/16			
HVAC	WL	9/19/16			

DRAWING STATUS				
ISSUED	REV	DATE	SDE	PEM
APPROVED FOR BID	0	9/19/16	DS	BGA

NOT APPROVED FOR CONSTRUCTION UNLESS SIGNED AND DATED. DESTROY ALL PRINTS BEARING EARLIER DATE AND/OR REV.NO.

AECOM
URS ENERGY & CONSTRUCTION Inc. - an AECOM Company
ATKINS
AREVA

AECOM PROJECT NO.: 31269

DWG NUMBER	TITLE
	DRAWING TRACEABILITY LIST

REF NUMBER	TITLE
NEXT USED ON	REFERENCES H-16-001206-01

APROVED FOR BID
NOT FOR CONSTRUCTION

REV	DESCRIPTION	ORG	CHK	APVD	IDV	DATE
0	APPROVED FOR BID	RC	DJ	DS	DKC	9/19/16

REVISIONS

BLDG. NO. 202LP
DWG. NO. 1001

CAUTION
NOT COMPLETE WITHOUT CURRENT CHANGE DOCUMENTS FROM DATABASE

ATTENTION
DESTROY THIS DOCUMENT BY SHREDDING
MAY CONTAIN SENSITIVE INFORMATION

NAME	DATE	COMPANY
DRAWN BY		
CHECKING APPROVAL		
DESIGN ENGINEER		
ENGINEER		

U.S. DEPARTMENT OF ENERGY
Office of River Protection

LAWPS
CFF FILTER MODULE CFF-P-03
CFF-EXCH-104 FRAME ASSY DPD

SIZE F | DRAWING NUMBER H-16-001207 | SHEET 1 | REV 0
SCALE NOTED
PLOTID

DRAWING

H-16-001208

CFF FILTER MODULE CFF-P-03 CFF-F-100 ASSEMBLY DPD

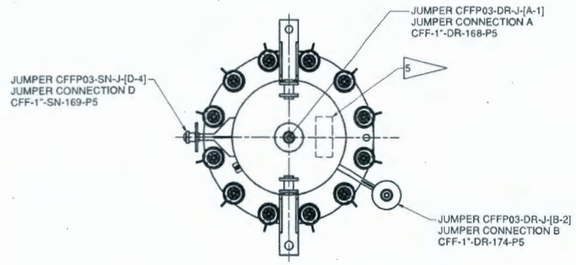

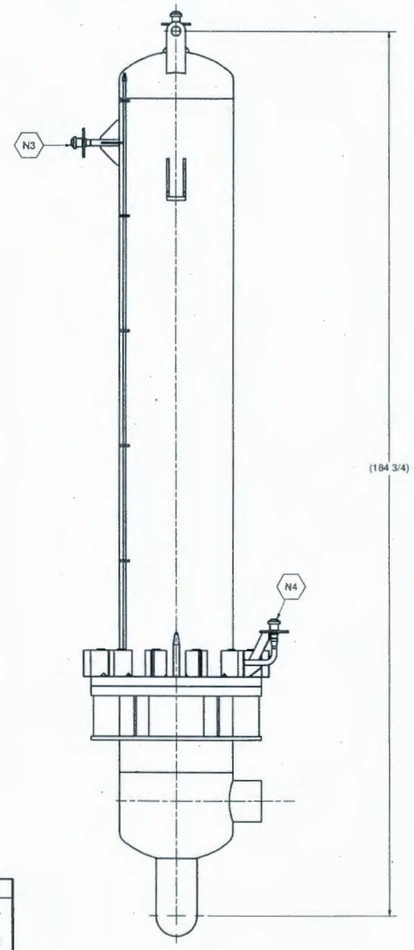

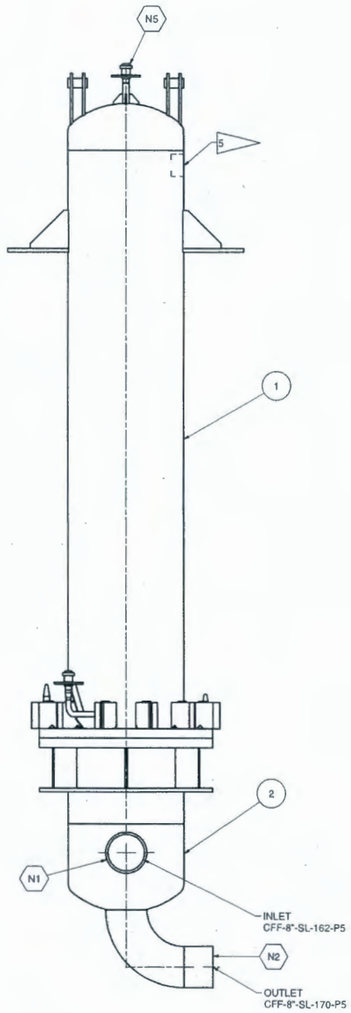

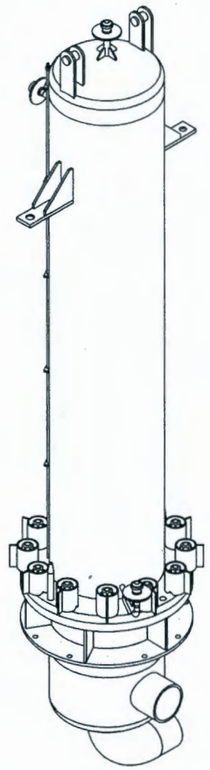

CFF-F-100 ASSEMBLY DPD
SCALE 1/12

PARTS/MATERIAL LIST

QL	QTY	PART/DRAWING NUMBER	NOMENCLATURE/DESCRIPTION	MATERIAL/REFERENCE	SH	ITEM
FQA	1	H-16-001209-01	CFF-F-100 CARTRIDGE ASSY DPD	N/A	1	1
FQA	1	H-16-001212-01	CFF-F-100 FILTER BASE DPD	N/A	1	2

GENERAL NOTES:

1. DIMENSIONS AND TOLERANCES ARE IN ACCORDANCE WITH ASME Y14.5M-1994.
2. APPROXIMATE WEIGHT = 3530 LBS EMPTY (279 GAL CAPACITY)
3. DESIGN AND FABRICATION SHALL BE IN ACCORDANCE WITH CROSS FLOW FILTER SYSTEM PROCUREMENT SPECIFICATION 15-2-001.
4. ALL MATERIAL THICKNESS SHOWN, EXCLUDING PROCESS PIPING ARE REFERENCE ONLY. ACTUAL THICKNESS TO BE DETERMINED DURING DESIGN.

5 LABEL FILTER IN ACCORDANCE WITH SPECIFICATION 15-2-001.

NOZZLE SCHEDULE

NOZZLE NO.	NOZZLE DESCRIPTION	NOZZLE SIZE	NOZZLE TYPE
N1	INLET	8" SCHED 80S	BW
N2	OUTLET	8" SCHED 80S	BW
N3	PERMEATE OUTLET	1" PUREX	PUREX
N4	PERMEATE DRAIN	1" PUREX	PUREX
N5	VENT	1" PUREX	PUREX

UNLESS OTHERWISE SPECIFIED
ALL DIMENSIONS ARE IN INCHES.
REMOVE BURRS & SHARP EDGES.
THIRD ANGLE PROJECTION
TOLERANCES
.X = ±.1
.XX = ±.01
.XXX = ±.005
X/XX = ±1/16
ANGLE = ±.5 DEG
MACHINED SURFACES 125
MACHINED INSIDE
RADII = .04 ±.02

REVISION APPROVAL RECORD — REV 0

DISCIPLINE	BY	DATE	DISCIPLINE	BY	DATE
ARCH.	SF	9/19/16	MECHANICAL	DS	9/19/16
BUILDING SERVICES	N/A	N/A	PIPING	MJ	9/19/16
CIVIL	SF	9/19/16	PROCESS	MW	9/19/16
ELECTRICAL	CF	9/19/16	QA / QC	PB	9/19/16
ENVIRON.	N/A	N/A	STRUCTURAL	SF	9/19/16
GEN. ARRANG.	DJ	9/19/16			
I & C	HF	9/19/16			
HVAC	WL	9/19/16			

DRAWING STATUS

ISSUED	REV	DATE	SDE	PEM
APPROVED FOR BID	0	9/19/16	DS	BGA

NOT APPROVED FOR CONSTRUCTION UNLESS SIGNED AND DATED. DESTROY ALL PRINTS BEARING EARLIER DATE AND/OR REV.NO.

AECOM
URS ENERGY & CONSTRUCTION Inc. - an AECOM Company
ATKINS
AREVA

AECOM PROJECT NO.: 31269

DWG NUMBER	TITLE
H-16-000023	P&ID CROSS FLOW FILTER PIT

DRAWING TRACEABILITY LIST

REF NUMBER	TITLE
NEXT USED ON	H-16-001202-01

REFERENCES

APROVED FOR BID
NOT FOR CONSTRUCTION

REV	DESCRIPTION	ORG	CHK	APVD	IDV	DATE
0	APPROVED FOR BID	RC	DJ	DS	DKC	9/19/16

REVISIONS

BLDG. NO. 202LP
INDEX NO. 2510 8405 8409

CAUTION
NOT COMPLETE WITHOUT CURRENT CHANGE DOCUMENTS FROM DATABASE

ATTENTION
DESTROY THIS DOCUMENT BY SHREDDING MAY CONTAIN SENSITIVE INFORMATION

NAME	DATE	COMPANY
DRAWN BY		
DISCIPLINE APPROVAL		
DISCIPLINE ENGINEER		

U.S. DEPARTMENT OF ENERGY
Office of River Protection
LAWPS
CFF FILTER MODULE CFF-P-03
CFF-F-100 ASSEMBLY DPD

SIZE F | DRAWING NUMBER H-16-001208 | SHEET 1 | REV 0
SCALE NOTED
PLOTID

DRAWING

H-16-001209

CFF FILTER MODULE CFF-P-03 CFF-F-100 CARTRIDGE ASSEMBLY DPD

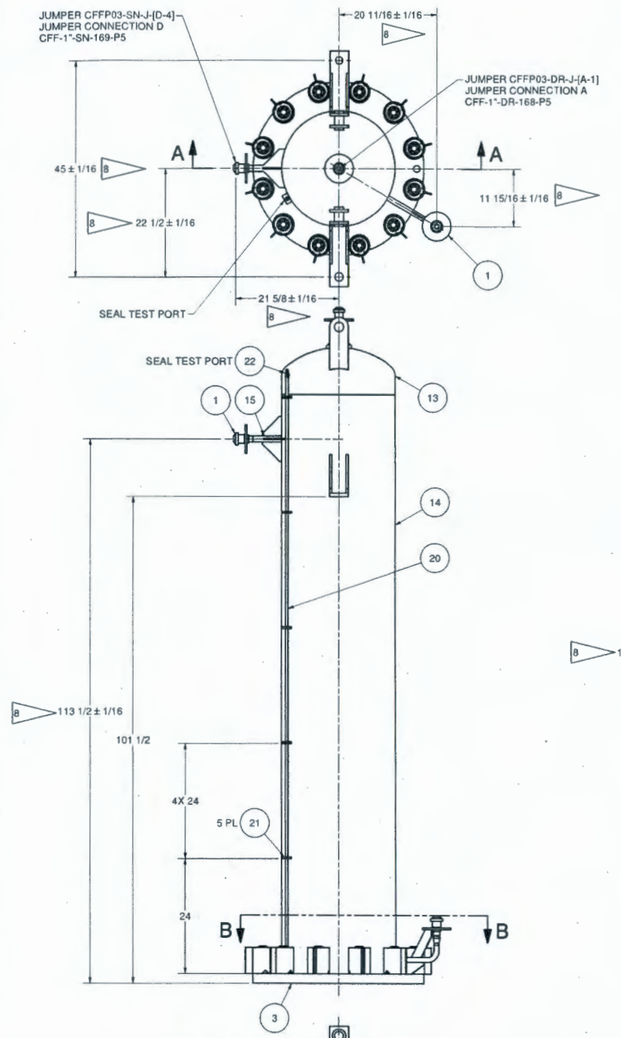

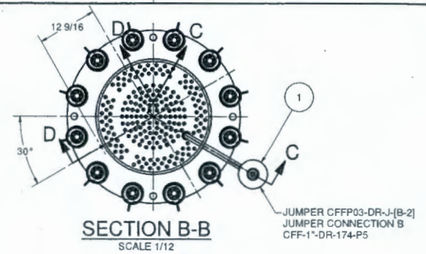

SECTION B-B
SCALE 1/12

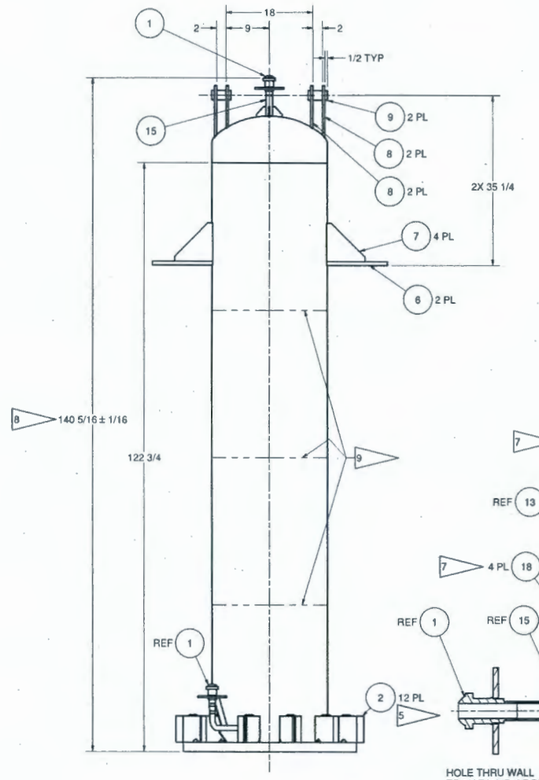

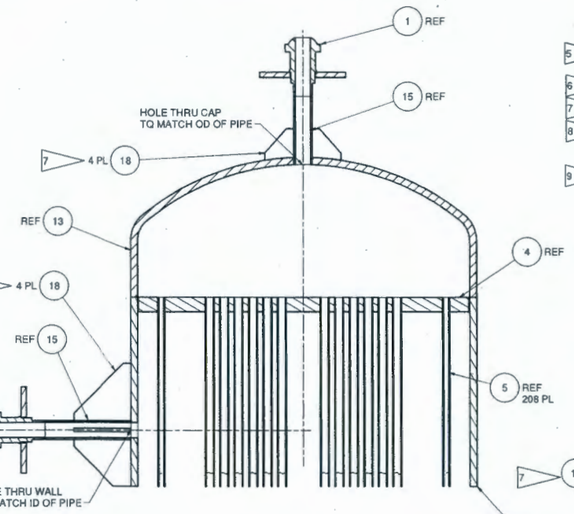

SECTION A-A
SCALE 1/4

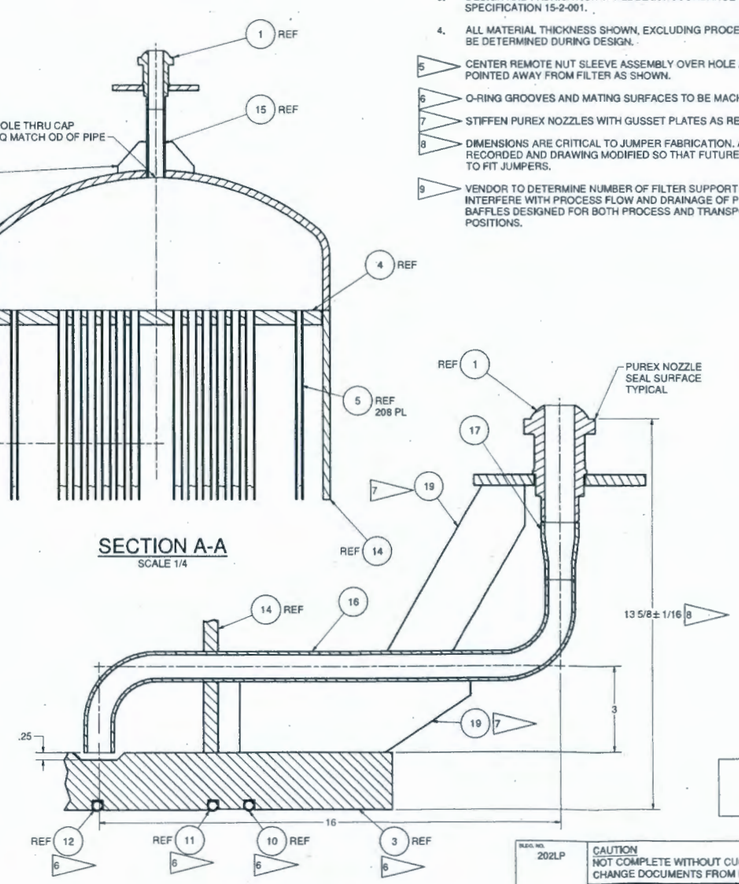

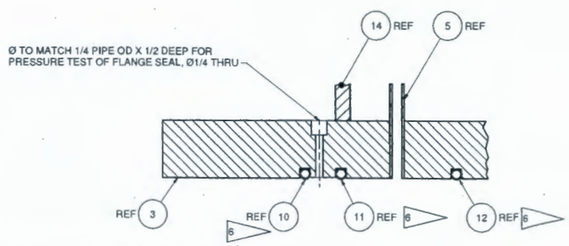

SECTION D-D
SCALE 1/2

SECTION C-C
SCALE 1/2

PARTS/MATERIAL LIST

QL	QTY	PART/DRAWING NUMBER	NOMENCLATURE/DESCRIPTION	MATERIAL/REFERENCE	SH	ITEM
FQA	3	H-16-001926-01	1" PUREX KICKOFF ASSEMBLY	N/A	1	1
FQA	12	H-16-001924-01	REMOTE NUT SLEEVE ASSEMBLY	N/A	1	2
FQA	1	H-16-001211-01, ITEM 3	CARTRIGE CFF-F-100/101 BASE PLATE		1	3
FQA	1	H-16-001211-01, ITEM 4	CARTRIDGE CFF-F-100/101 UPPER PLATE		1	4
FQA	208	H-16-001211-01, ITEM 5	FILTER TUBE		1	5
FQA	2	H-16-001211-01, ITEM 6	ANCHOR BRACKET		1	6
FQA	4	H-16-001211-01, ITEM 7	GUSSET PLATE		1	7
FQA	4	H-16-001211-01, ITEM 8	LIFTING BRACKET		1	8
FQA	2	N/A	RND BAR, 2 DIA X 4 LG	ASTM A276 316/316L SST	1	9
FQA	1	(PARKER)	O-RING, 26.5 OD X 3/8 DIA, 316L SST	(PARKER)	1	10
FQA	1	(PARKER)	O-RING, 24 OD X 3/8 DIA, 316L SST	(PARKER)	1	11
FQA	1	(PARKER)	O-RING, 18 OD X 3/8 DIA, 316L SST	(PARKER)	1	12
FQA	1	N/A	CAP, 24 INCH, EXTRA HEAVY (.5 WALL)	ASTM A403 WP316/316L-S SST	1	13
FQA	AR	N/A	PIPE, 24 INCH PIPE, EXTRA HEAVY (.5 WALL)	ASTM A312 TP316/316L SST	1	14
FQA	AR	N/A	PIPE, 1 INCH SCHED 40S	ASTM A312 TP316/316L SST	1	15
FQA	AR	N/A	PIPE, 3/4 INCH SCHED 40S	ASTM A312 TP316/316L SST	1	16
FQA	1	N/A	REDUCER, 1 X 3/4 SCHED 40S	ASTM A403 W316/316L-S SST	1	17
FQA	AR	N/A	PLATE, 1/4 THICK	ASTM A240 316/316L SST	1	18
FQA	AR	N/A	PLATE, 3/16 THICK	ASTM A240 316/316L SST	1	19
FQA	AR	N/A	PIPE, 1/4 INCH X 1.25 LG, SCHED 40S	ASTM A312 TP 316/316L-S	1	20
FQA	5	H-16-001211-01, ITEM 21	PLATE, 1 3/16 X 2 X 3/8 THK	N/A	1	21
FQA	1	(SS-QF4-4PF-21021)	QUICK DISCONNECT, FULL FLOW STEM, 1/4" FNPT	(SWAGELOK)	1	22

GENERAL NOTES:

1. DIMENSIONS AND TOLERANCES ARE IN ACCORDANCE WITH ASME Y14.5M-1994.
2. APPROXIMATE WEIGHT = 2630 LBS EMPTY
3. DESIGN AND FABRICATION SHALL BE IN ACCORDANCE WITH CROSS FLOW FILTER SYSTEM PROCUREMENT SPECIFICATION 15-2-001.
4. ALL MATERIAL THICKNESS SHOWN, EXCLUDING PROCESS PIPE ARE REFERENCE ONLY. ACTUAL THICKNESS TO BE DETERMINED DURING DESIGN.

5. CENTER REMOTE NUT SLEEVE ASSEMBLY OVER HOLE AND WELD SLEEVE TO FLANGE WITH STOP BAR POINTED AWAY FROM FILTER AS SHOWN.
6. O-RING GROOVES AND MATING SURFACES TO BE MACHINED AFTER FINAL WELDING.
7. STIFFEN PUREX NOZZLES WITH GUSSET PLATES AS REQUIRED.
8. DIMENSIONS ARE CRITICAL TO JUMPER FABRICATION. AS-BUILT DIMENSIONS SHALL BE RECORDED AND DRAWING MODIFIED SO THAT FUTURE FABRICATIONS CAN BE FABRICATED TO FIT JUMPERS.
9. VENDOR TO DETERMINE NUMBER OF FILTER SUPPORT BAFFLES DURING DESIGN AND VERIFY THEY DON'T INTERFERE WITH PROCESS FLOW AND DRAINAGE OF PERMEATE THRU THE FILTER CARTRIDGE ASSEMBLY. BAFFLES DESIGNED FOR BOTH PROCESS AND TRANSPORT LOADS FOR FILTER IN VERTICAL AND HORIZONTAL POSITIONS.

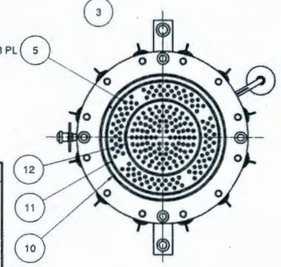

CFF-F-100 CARTRIDGE ASSY DPD
SCALE 1/12

UNLESS OTHERWISE SPECIFIED
ALL DIMENSIONS ARE IN INCHES.
REMOVE BURRS & SHARP EDGES.
THIRD ANGLE PROJECTION
TOLERANCES
.X = ±.1
.XX = ±.01
.XXX = ±.005
X/XX = ±1/16
ANGLE = ±.5 DEG
MACHINED SURFACES 125
MACHINED INSIDE RADII = .04 ±.02

APROVED FOR BID
NOT FOR CONSTRUCTION

REVISION APPROVAL RECORD					REV 0
DISCIPLINE	BY	DATE	DISCIPLINE	BY	DATE
ARCH.	SF	9/19/16	MECHANICAL	DS	9/19/16
BUILDING SERVICES	N/A	N/A	PIPING	MJ	9/19/16
CIVIL	SF	9/19/16	PROCESS	MW	9/19/16
ELECTRICAL	CF	9/19/16	QA / QC	PB	9/19/16
ENVIRON.	N/A	N/A	STRUCTURAL	SF	9/19/16
GEN. ARRANG.	DJ	9/19/16			
I & C	HF	9/19/16			
HVAC		9/19/16			

DRAWING STATUS				
ISSUED	REV	DATE	SDE	PEM
APPROVED FOR BID	0	9/19/16	DS	BGA

NOT APPROVED FOR CONSTRUCTION UNLESS SIGNED AND DATED. DESTROY ALL PRINTS BEARING EARLIER DATE AND/OR REV.NO.

AECOM
URS ENERGY & CONSTRUCTION Inc. - an AECOM Company
ATKINS
AREVA

AECOM PROJECT NO.: 31269

DWG NUMBER	TITLE
DRAWING TRACEABILITY LIST	

REF NUMBER	TITLE
REFERENCES	
NEXT USED ON	H-16-001208-01

REV NO.	DESCRIPTION
REVISIONS	

0	APPROVED FOR BID	RC	DJ	DS	DKC	9/19/16
REV	DESCRIPTION	ORG	CHK	APVD	IDV	DATE

BLDG. NO. 202LP

INDEX NO. 2510 8405 8409

CAUTION
NOT COMPLETE WITHOUT CURRENT CHANGE DOCUMENTS FROM DATABASE

ATTENTION
DESTROY THIS DOCUMENT BY SHREDDING MAY CONTAIN SENSITIVE INFORMATION

NAME	DATE	COMPANY
DRAWN BY		
DRAFTING APPROVAL		
DISCIPLINE ENGINEER		
ENGINEER		

U.S. DEPARTMENT OF ENERGY
Office of River Protection

LAWPS
CFF FILTER MODULE CFF-P-03
CFF-F-100 CARTRIDGE ASSY DPD

SIZE F | DRAWING NUMBER H-16-001209 | SHEET 1 | REV 0

SCALE NOTED

PLOTID

DOC_TB_F (DWG-NON-2010)

DRAWING

H-16-001210

CFF FILTER MODULE CFF-P-03 CFF-F-101 ASSEMBLY DPD

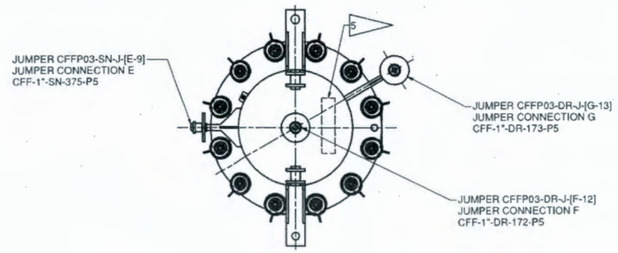

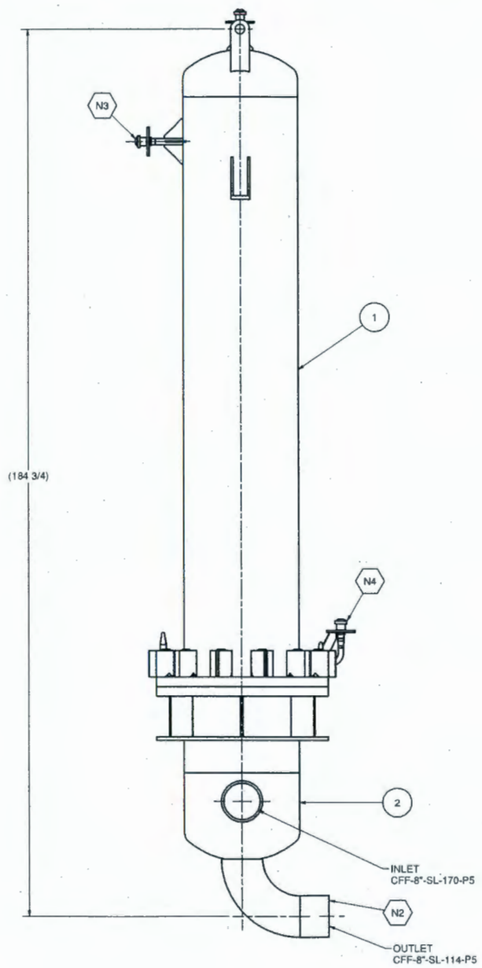

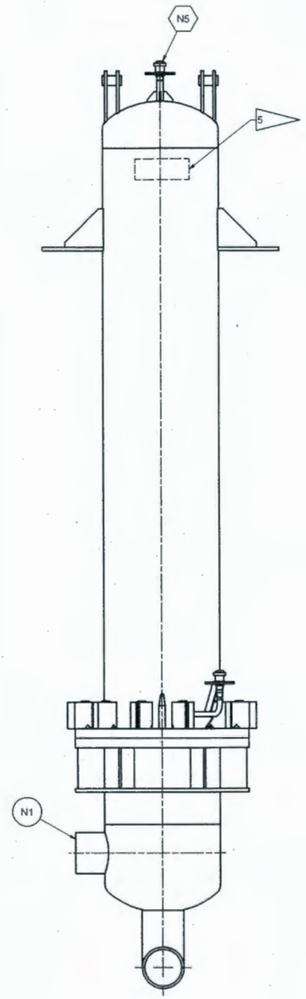

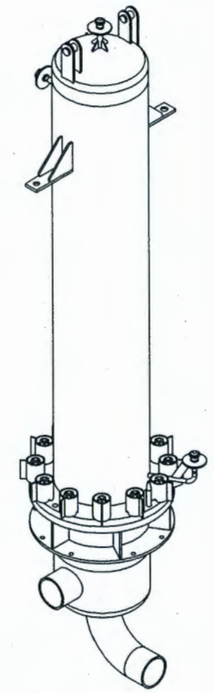

CFF-F-101 ASSEMBLY DPD

SCALE 1/12

PARTS/MATERIAL LIST

QL	QTY	PART/DRAWING NUMBER	NOMENCLATURE/DESCRIPTION	MATERIAL/REFERENCE	SH	ITEM
FQA	1	H-16-001211-01	CFF-F-101 CARTRIDGE ASSY DPD	N/A	1	1
FQA	1	H-16-001213-01	CFF-F-101 FILTER BASE DPD	N/A	1	2

GENERAL NOTES:

1. DIMENSIONS AND TOLERANCES ARE IN ACCORDANCE WITH ASME Y14.5M-1994.
2. APPROXIMATE WEIGHT = 3530 LBS EMPTY (279 GAL CAPACITY)
3. DESIGN AND FABRICATION SHALL BE IN ACCORDANCE WITH CROSS FLOW FILTER SYSTEM PROCUREMENT SPECIFICATION 15-2-001.
4. ALL MATERIAL THICKNESS SHOWN, EXCLUDING PROCESS PIPE ARE REFERENCE ONLY. ACTUAL THICKNESS TO BE DETERMINED DURING DESIGN.

5 LABEL FILTER IN ACCORDANCE WITH SPECIFICATION 15-2-001.

NOZZLE SCHEDULE			
NOZZLE NO.	NOZZLE DESCRIPTION	NOZZLE SIZE	NOZZLE TYPE
N1	INLET	8" SCHED 80S	BW
N2	OUTLET	8" SCHED 80S	BW
N3	PERMEATE OUTLET	1" PUREX	PUREX
N4	PERMEATE DRAIN	1" PUREX	PUREX
N5	VENT	1" PUREX	PUREX

UNLESS OTHERWISE SPECIFIED
ALL DIMENSIONS ARE IN INCHES.
REMOVE BURRS & SHARP EDGES.
THIRD ANGLE PROJECTION
TOLERANCES
.X = ± .1
.XX = ± .01
.XXX = ± .005
X/XX = ± 1/16
ANGLE = ± .5 DEG
MACHINED SURFACES 125
MACHINED INSIDE
RADII = .04 ±.02

REVISION APPROVAL RECORD					REV 0
DISCIPLINE	BY	DATE	DISCIPLINE	BY	DATE
ARCH.	SF	9/19/16	MECHANICAL	DS	9/19/16
BUILDING SERVICES	N/A	N/A	PIPING	MJ	9/19/16
CIVIL	SF	9/19/16	PROCESS	MW	9/19/16
ELECTRICAL	CF	9/19/16	QA / QC	PB	9/19/16
ENVIRON.	N/A	N/A	STRUCTURAL	SF	9/19/16
GEN. ARRANG.	DJ	9/19/16			
I & C	HF	9/19/16			
HVAC		9/19/16			

DRAWING STATUS				
ISSUED	REV	DATE	SDE	PEM
APPROVED FOR BID	0	9/19/16	DS	BGA

NOT APPROVED FOR CONSTRUCTION UNLESS SIGNED AND DATED. DESTROY ALL PRINTS BEARING EARLIER DATE AND/OR REV.NO.

AECOM
URS ENERGY & CONSTRUCTION Inc. - an AECOM Company
ATKINS
AREVA

AECOM PROJECT NO.: 31269

DWG NUMBER	TITLE
DRAWING TRACEABILITY LIST	

REF NUMBER	TITLE
H-16-000023	P&ID CROSS FLOW FILTER PIT
REFERENCES	
NEXT USED ON	H-16-001202-01

APROVED FOR BID
NOT FOR CONSTRUCTION

REV	DESCRIPTION	ORG	CHK	APVD	IDV	DATE
0	APPROVED FOR BID	RC	DJ	DS	DKC	9/19/16

REVISIONS

SILOS NO. 202LP

INDEX NO. 2510 8405 8409

CAUTION
NOT COMPLETE WITHOUT CURRENT CHANGE DOCUMENTS FROM DATABASE

ATTENTION
DESTROY THIS DOCUMENT BY SHREDDING MAY CONTAIN SENSITIVE INFORMATION

NAME	DATE	COMPANY
DRAWN BY		
DSGN/ENG APPROVAL		
DISCIPLINE ENGINEER		
ENGINEER		

U.S. DEPARTMENT OF ENERGY
Office of River Protection

LAWPS
CFF FILTER MODULE CFF-P-03
CFF-F-101 ASSEMBLY DPD

SIZE F | DRAWING NUMBER H-16-001210 | SHEET 1 | REV 0

SCALE NOTED

PLOTID

DOE_TS_F.DWG Rev 2016

DRAWING

H-16-001211-1

CFF FILTER MODULE CFF-P-03 CFF-F-101 CARTRIDGE ASSEMBLY DPD

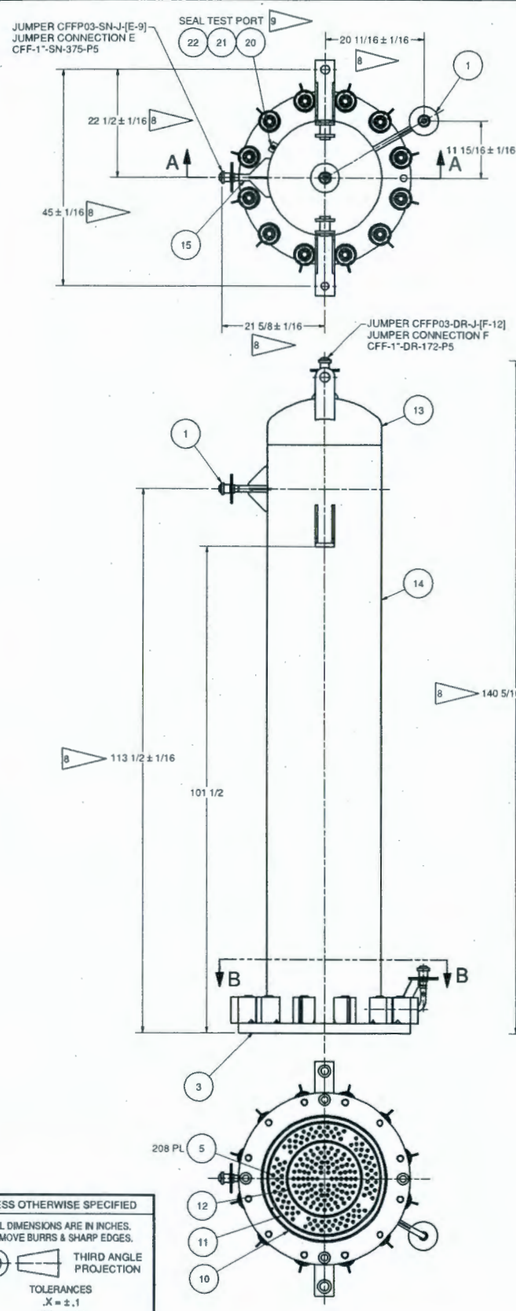

CFF-F-101 CARTRIDGE ASSY DPD
SCALE 1/12

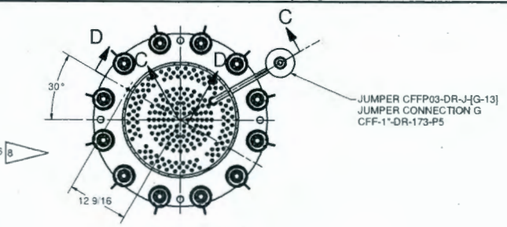

SECTION B-B
SCALE 1/12

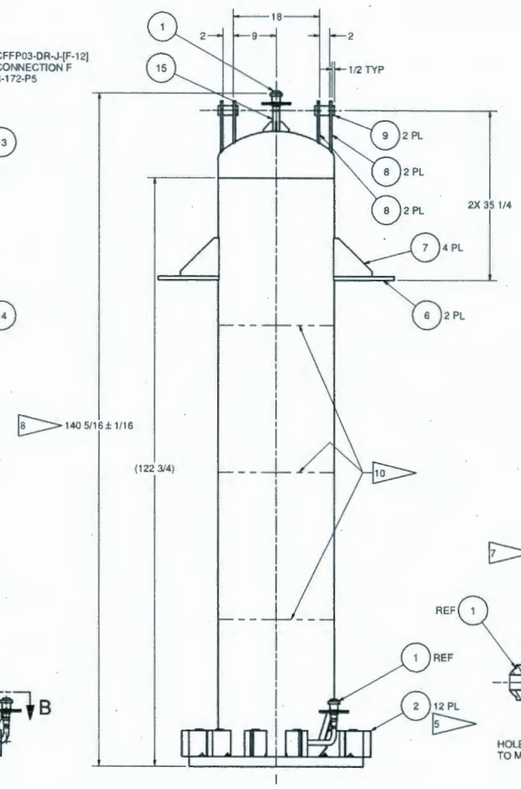

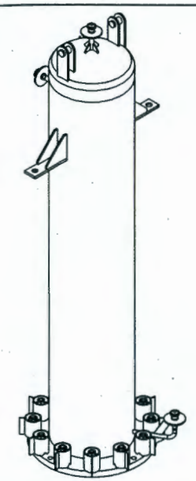

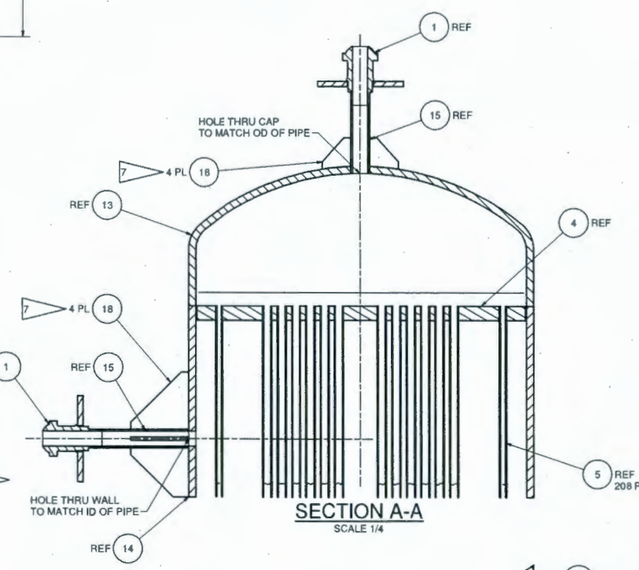

SECTION A-A
SCALE 1/4

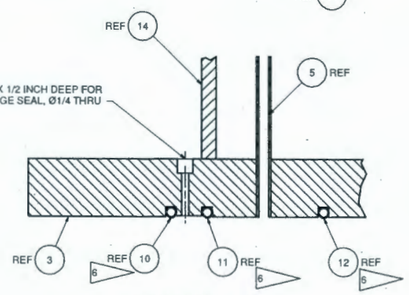

SECTION D-D
SCALE 1/2

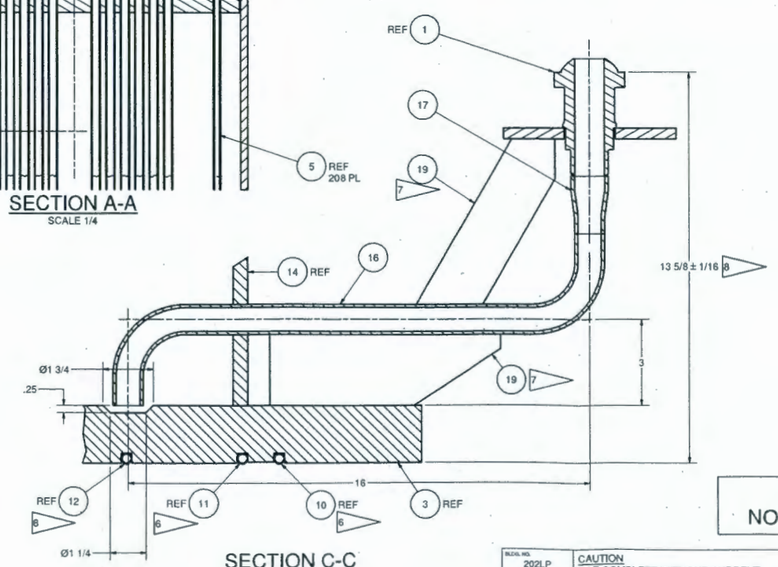

SECTION C-C
SCALE 1/2

PARTS/MATERIAL LIST

QL	QTY	PART/DRAWING NUMBER	NOMENCLATURE/DESCRIPTION	MATERIAL/REFERENCE	SH	ITEM
FQA	3	H-16-001926-01	1" PUREX KICKOFF ASSEMBLY	N/A	1	1
FQA	12	H-16-001924-01	REMOTE NUT SLEEVE ASSEMBLY	N/A	1	2
FQA	1	N/A	CARTRIDGE CFF-F-100/101 BASE PLATE, 2 THICK	ASTM A240 316/316L SST	1,2	3
FQA	1	N/A	CARTRIDGE CFF-F-100/101 UPPER PLATE	ASTM A240 316/316L SST	1,2	4
FQA	208	N/A	FILTER TUBE, SINTERED METAL, 5/8 OD	ASTM A269 316L SST	1,3	5
FQA	2	N/A	ANCHOR BRACKET, 3/4 THICK	ASTM A240 316/316L SST	1,3	6
FQA	4	N/A	GUSSET PLATE, 1/2 THICK	ASTM A240 316/316LL SST	1,3	7
FQA	4	N/A	LIFTING BRACKET, 1/2 THICK	ASTM A240 316/316LL SST	1,3	8
FQA	2	N/A	RND BAR, 2 DIA X 4 LG	ASTM A276 316/316L SST	1	9
FQA	1	(PARKER)	O-RING, 26.5 OD X 3/8 DIA, 316L SST	(PARKER)	1	10
FQA	1	(PARKER)	O-RING, 24 OD X 3/8 DIA, 316L SST	(PARKER)	1	11
FQA	1	(PARKER)	O-RING, 16 OD X 3/8 DIA, 316L SST	(PARKER)	1	12
FQA	1	N/A	CAP, 24 INCH, EXTRA HEAVY (.5 WALL)	ASTM A403 WP316/316L-S SST	1	13
FQA	AR	N/A	PIPE, 24 INCH, EXTRA HEAVY (.5 WALL)	ASTM A312 TP316/316L SST	1	14
FQA	AR	N/A	PIPE, 1 INCH SCHED 40S	ASTM A312 TP316/316L SST	1	15
FQA	AR	N/A	PIPE, 3/4 INCH SCHED 40S	ASTM A312 TP316/316L SST	1	16
FQA	1	N/A	REDUCER, 1 X 3/4 SCHED 40	ASTM A403 W316/316L-S SST	1	17
FQA	AR	N/A	PLATE, 1/4 THICK	ASTM A240 316/316L SST	1	18
FQA	AR	N/A	PLATE, 3/16 THICK	ASTM A240 316/316L SST	1	19
FQA	AR	N/A	PIPE, 1/4 INCH X 125 LG, SCHED 40S	ASTM A312 TP 316/316L-S	1	20
FQA	5	N/A	PLATE, 1 3/16 X 2 X 3/8 THK	ASTM A240 316/316LL SST	1,3	21
FQA	1	(SS-QF4-4PF-21021)	QUICK DISCONNECT, FULL FLOW STEM, 1/4" FNPT	(SWAGELOK)	1	22

GENERAL NOTES:

1. DIMENSIONS AND TOLERANCES ARE IN ACCORDANCE WITH ASME Y14.5M-1994.
2. APPROXIMATE WEIGHT = 2630 LBS EMPTY
3. DESIGN AND FABRICATION SHALL BE IN ACCORDANCE WITH CROSS FLOW FILTER SYSTEM PROCUREMENT SPECIFICATION 15-2-001.
4. ALL MATERIAL THICKNESS SHOWN ARE, EXCLUDING PROCESS PIPE REFERENCE ONLY. ACTUAL THICKNESS TO BE DETERMINED DURING DESIGN.

5. CENTER REMOTE NUT SLEEVE ASSEMBLY OVER HOLE AND WELD SLEEVE TO FLANGE WITH STOP BAR POINTED AWAY FROM FILTER AS SHOWN.
6. O-RING GROOVES AND MATING SURFACES TO BE MACHINED AFTER FINAL WELDING.
7. STIFFEN PUREX NOZZLES WITH GUSSET PLATES AS REQUIRED.
8. DIMENSIONS ARE CRITICAL TO JUMPER FABRICATION. AS-BUILT DIMENSIONS SHALL BE RECORDED AND DRAWING MODIFIED SO THAT FUTURE FABRICATIONS CAN BE FABRICATED TO FIT JUMPERS.
9. SEAL TEST PORT AS SHOWN ON H-16-001209-01.
10. VENDOR TO DETERMINE NUMBER OF FILTER SUPPORT BAFFLES DURING DESIGN AND VERIFY THEY DON'T INTERFERE WITH PROCESS FLOW AND DRAINAGE OF PERMEATE THRU THE FILTER CARTRIDGE ASSEMBLY. BAFFLES DESIGNED FOR BOTH PROCESS AND TRANSPORT LOADS FOR FILTER IN VERTICAL AND HORIZONTAL POSITIONS.

APROVED FOR BID
NOT FOR CONSTRUCTION

UNLESS OTHERWISE SPECIFIED
ALL DIMENSIONS ARE IN INCHES.
REMOVE BURRS & SHARP EDGES.
THIRD ANGLE PROJECTION
TOLERANCES
.X = ±.1
.XX = ±.01
.XXX = ±.005
X/XX = ±1/16
ANGLE = ±.5 DEG
MACHINED SURFACES 125
MACHINED INSIDE
RADII = .04 ±.02

REVISION APPROVAL RECORD — REV 0

DISCIPLINE	BY	DATE	DISCIPLINE	BY	DATE
ARCH.	SF	9/19/16	MECHANICAL	DS	9/19/16
BUILDING SERVICES	N/A	N/A	PIPING	MJ	9/19/16
CIVIL	SF	9/19/16	PROCESS	MW	9/19/16
ELECTRICAL	CF	9/19/16	QA / QC	PB	9/19/16
ENVIRON.	N/A	N/A	STRUCTURAL	SF	9/19/16
GEN. ARRANG.	DJ	9/19/16			
I & C	HF	9/19/16			
HVAC	WL	9/19/16			

DRAWING STATUS

ISSUED	REV	DATE	SDE	PEM
APPROVED FOR BID	0	9/19/16	DS	BGA

NOT APPROVED FOR CONSTRUCTION UNLESS SIGNED AND DATED. DESTROY ALL PRINTS BEARING EARLIER DATE AND/OR REV.NO.

AECOM
URS ENERGY & CONSTRUCTION Inc. - an AECOM Company
ATKINS
AREVA
AECOM PROJECT NO.: 31269

DWG NUMBER | TITLE
DRAWING TRACEABILITY LIST

REF NUMBER | TITLE
REFERENCES
NEXT USED ON H-16-001210-01

REV	DESCRIPTION	ORG	CHK	APVD	IDV	DATE
0	APPROVED FOR BID	RC	DJ	DS	DKC	9/19/16

REVISIONS

BLDG. NO. 202LP
INDEX NO. 2510 8405 8409

CAUTION
NOT COMPLETE WITHOUT CURRENT CHANGE DOCUMENTS FROM DATABASE

ATTENTION
DESTROY THIS DOCUMENT BY SHREDDING MAY CONTAIN SENSITIVE INFORMATION

NAME | DATE | COMPANY
DRAWN BY
DRAFTING APPROVAL
DISCIPLINE ENGINEER
ENGINEER

U.S. DEPARTMENT OF ENERGY
Office of River Protection
LAWPS
CFF FILTER MODULE CFF-P-03
CFF-F-101 CARTRIDGE ASSY DPD

SIZE F | DRAWING NUMBER H-16-001211 | SHEET 1 | REV 0
SCALE NOTED
PLOTID

DRAWING

H-16-001211-2

CFF FILTER MODULE CFF-P-03 CFF-F-101 CARTRIDGE ASSEMBLY DPD

NOTES:

FOR GENERAL NOTES AND PARTS LIST SEE SHEET 1.

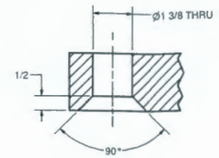

SECTION F-F
SCALE 1/2
TYPICAL 4 PLACES

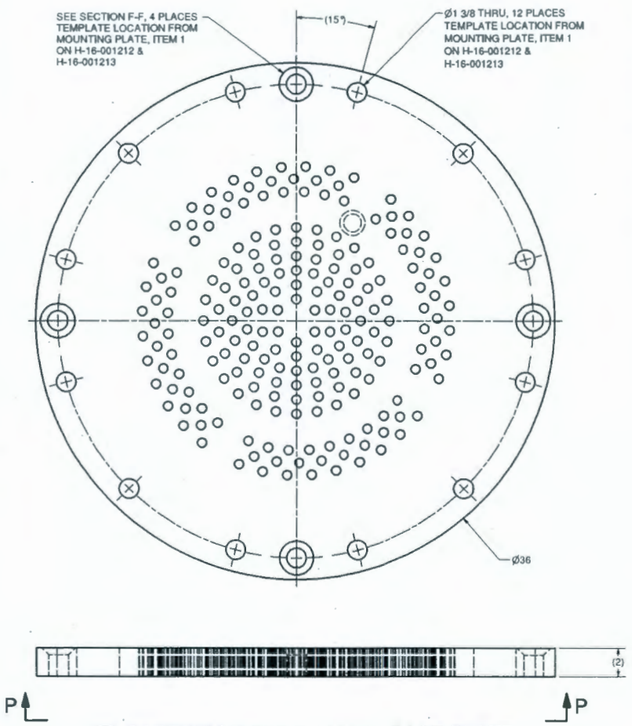

3 CARTRIDGE CFF-F-100/101 BASE PLATE
SCALE: 1/4

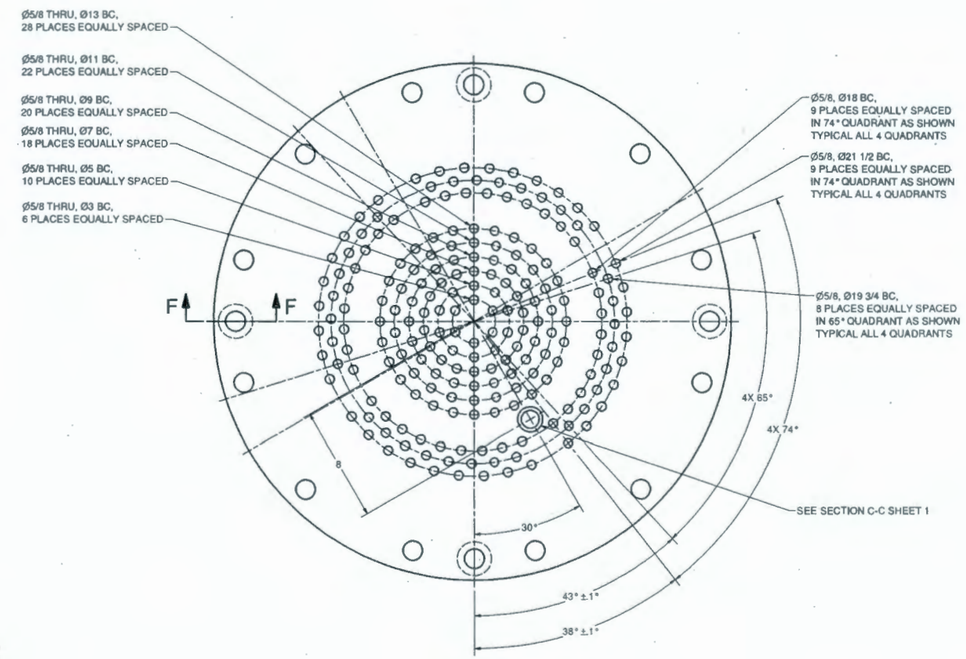

VIEW P-P
SCALE 1/4

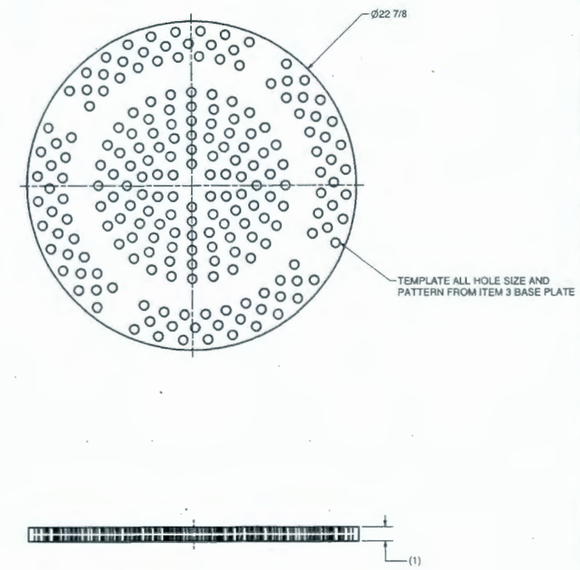

4 CARTRIDGE CFF-F-100/101 UPPER PLATE
SCALE: 1/4

UNLESS OTHERWISE SPECIFIED
ALL DIMENSIONS ARE IN INCHES.
REMOVE BURRS & SHARP EDGES.
THIRD ANGLE PROJECTION
TOLERANCES
.X = ±.1
.XX = ±.01
.XXX = ±.005
X/XX = ±1/16
ANGLE = ±.5 DEG
MACHINED SURFACES 125
MACHINED INSIDE
RADII = .04 ±.02

REVISION APPROVAL RECORD				REV 0	
DISCIPLINE	BY	DATE	DISCIPLINE	BY	DATE
ARCH.	SF	9/19/16	MECHANICAL	DS	9/19/16
BUILDING SERVICES	N/A	N/A	PIPING	MJ	9/19/16
CIVIL	SF	9/19/16	PROCESS	MW	9/19/16
ELECTRICAL	CF	9/19/16	QA / QC	PB	9/19/16
ENVIRON.	N/A	N/A	STRUCTURAL	SF	9/19/16
GEN. ARRANG.	DJ	9/19/16			
I & C	HF	9/19/16			
HVAC	IK	9/19/16			

DRAWING STATUS				
ISSUED	REV	DATE	SDE	PEM
APPROVED FOR BID	0	9/19/16	DS	BGA

NOT APPROVED FOR CONSTRUCTION UNLESS SIGNED AND DATED. DESTROY ALL PRINTS BEARING EARLIER DATE AND/OR REV.NO.

AECOM
URS ENERGY & CONSTRUCTION Inc. - an AECOM Company
ATKINS
AREVA

AECOM PROJECT NO.: 31269

DRAWING TRACEABILITY LIST			
DWG NUMBER	TITLE	REF NUMBER	TITLE
		NEXT USED ON	SHEET 1

APROVED FOR BID
NOT FOR CONSTRUCTION

REVISIONS						
REV	DESCRIPTION	ORG	CHK	APVD	IDV	DATE
0	APPROVED FOR BID	RC	DJ	DS	DKC	9/19/16

BLDG. NO. 202LP
INDEX NO. 2510 8409

CAUTION
NOT COMPLETE WITHOUT CURRENT CHANGE DOCUMENTS FROM DATABASE

ATTENTION
DESTROY THIS DOCUMENT BY SHREDDING MAY CONTAIN SENSITIVE INFORMATION

NAME	DATE	COMPANY
DRAWN BY		
PROJ/PRD APPROVAL		
DISCIPLINE ENGINEER		
CHECKED		

U.S. DEPARTMENT OF ENERGY
Office of River Protection

LAWPS
CFF FILTER MODULE CFF-P-03
CFF-F-101 CARTRIDGE ASSY DPD

SIZE F | DRAWING NUMBER H-16-001211 | SHEET 2 | REV 0
SCALE NOTED
PLOTID

DRAWING

H-16-001211-3

CFF FILTER MODULE CFF-P-03 CFF-F-101 CARTRIDGE ASSEMBLY DPD

NOTES:

FOR GENERAL NOTES AND PARTS LIST SEE SHEET 1.

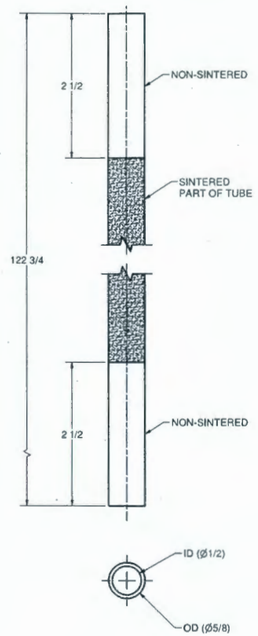

5 FILTER TUBE
SCALE: 1/1

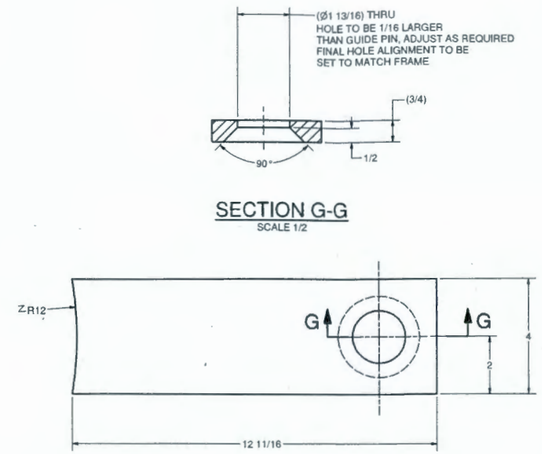

6 ANCHOR BRACKET
SCALE: 1/2

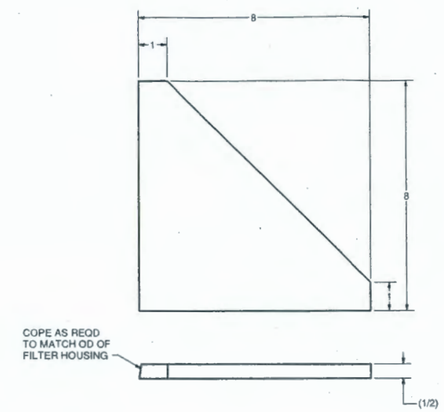

7 GUSSET PLATE
SCALE: 1/2

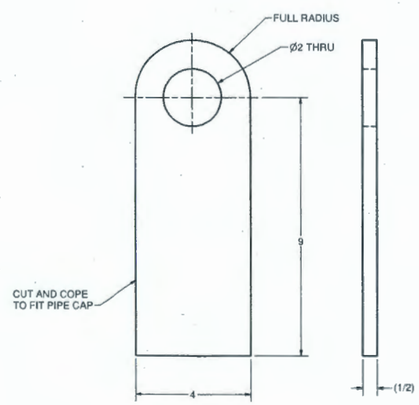

8 LIFTING BRACKET
SCALE: 1/2

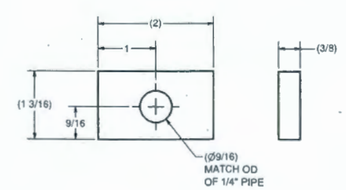

21 PLATE
SCALE: 1:1

UNLESS OTHERWISE SPECIFIED

ALL DIMENSIONS ARE IN INCHES.
REMOVE BURRS & SHARP EDGES.

THIRD ANGLE PROJECTION

TOLERANCES
.X = ±.1
.XX = ±.01
.XXX = ±.005
X/XX = ±1/16
ANGLE = ±.5 DEG
MACHINED SURFACES 125
MACHINED INSIDE
RADII = .04 ±.02

REVISION APPROVAL RECORD				REV 0	
DISCIPLINE	BY	DATE	DISCIPLINE	BY	DATE
ARCH.	SF	9/19/16	MECHANICAL	DS	9/19/16
BUILDING SERVICES	N/A	N/A	PIPING	MJ	9/19/16
CIVIL	SF	9/19/16	PROCESS	MW	9/19/16
ELECTRICAL	CF	9/19/16	QA / QC	PB	9/19/16
ENVIRON.	N/A	N/A	STRUCTURAL	SF	9/19/16
GEN. ARRANG.	DJ	9/19/16			
I & C	HF	9/19/16			
HVAC	WL	9/19/16			

DRAWING STATUS				
ISSUED	REV	DATE	SDE	PEM
APPROVED FOR BID	0	9/19/16	DS	BGA

NOT APPROVED FOR CONSTRUCTION UNLESS SIGNED AND DATED. DESTROY ALL PRINTS BEARING EARLIER DATE AND/OR REV.NO.

AECOM
URS ENERGY & CONSTRUCTION Inc. - an AECOM Company
ATKINS
AREVA

AECOM PROJECT NO.: 31269

DWG NUMBER	TITLE
DRAWING TRACEABILITY LIST	

REF NUMBER	TITLE
NEXT USED ON	SHEET 1

REFERENCES

APROVED FOR BID
NOT FOR CONSTRUCTION

REV	DESCRIPTION	ORIG	CHK	APVD	IDV	DATE
0	APPROVED FOR BID	RC	DJ	DS	DKC	9/19/16

REVISIONS

BLDG. NO. 202LP

INDEX NO. 1001 2510

CAUTION
NOT COMPLETE WITHOUT CURRENT CHANGE DOCUMENTS FROM DATABASE

ATTENTION
DESTROY THIS DOCUMENT BY SHREDDING
MAY CONTAIN SENSITIVE INFORMATION

NAME	DATE	COMPANY
DRAWN BY		
DISCIPLINE APPROVAL		
DISCIPLINE ENGINEER		
ENGINEER		

U.S. DEPARTMENT OF ENERGY
Office of River Protection

LAWPS
CFF FILTER MODULE CFF-P-03
CFF-F-101 CARTRIDGE ASSY DPD

SIZE F | DRAWING NUMBER H-16-001211 | SHEET 3 | REV 0

SCALE NOTED

PLOTID

DRAWING

H-16-001212-1

CFF FILTER MODULE CFF-P-03 CFF-F-100 FILTER BASE DPD

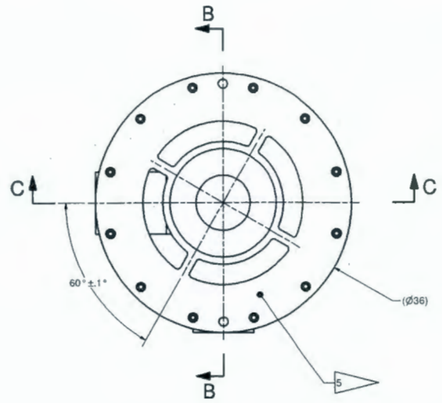

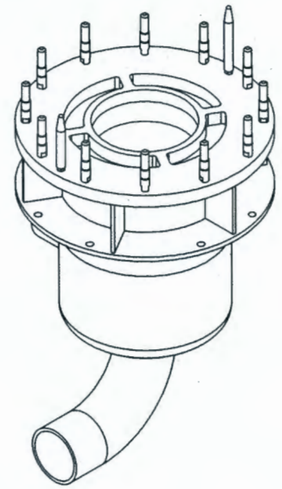

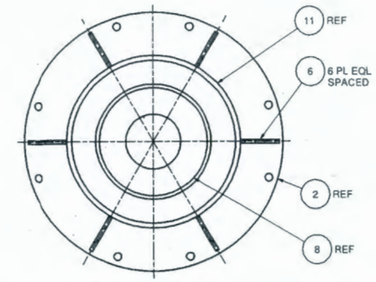

SECTION A-A
SCALE 1/8

PARTS/MATERIAL LIST

QL	QTY	PART/DRAWING NUMBER	NOMENCLATURE/DESCRIPTION	MATERIAL/REFERENCE	SH	ITEM
FQA	1	N/A	MOUNTING PLATE, 2 THICK	ASTM A240 316L SST	1,2	1
FQA	1	N/A	STIFFENER PLATE, 3/4 THICK	ASTM A240 316L SST	1,2	2
FQA	1	N/A	LONG GUIDE PIN, RND BAR 1 1/4 DIA	ASTM A276 316L SST	1,2	3
FQA	1	N/A	SHORT GUIDE PIN, RND BAR 1 1/4 DIA	ASTM A276 316L SST	1,2	4
FQA	12	N/A	STUD, RND BAR, 1 1/4 DIA	NITRONIC 60	1,2	5
FQA	12	N/A	PLATE, 5 1/2 X 5 1/2 X 1/2 THK	ASTM A240 316L SST	1	6
FQA	1	N/A	CAP, 24 INCH OD, SCHED 40 (.687 WALL)	ASTM A403 W316/316L-S SST	1	7
FQA	1	N/A	REDUCER, CONCENTRIC 8 X 16 SCHED 80	ASTM A403 W316/316L-S SST	1	8
FQA	1	N/A	ELBOW, 8 INCH LR 90 DEG SCHED 80	ASTM A403 W316/316L-S SST	1	9
FQA	1	N/A	ELBOW, 8 INCH SR 90 DEG SCHED 80	ASTM A403 W316/316L-S SST	1	10
FQA	AR	N/A	PIPE, 24 INCH, SCHED 40S (.687 WALL)	ASTM A312 TP316/316L SST	1	11
FQA	AR	N/A	PIPE, 8 INCH SCHED 80S	ASTM A312 TP316/316L SST	1	12

GENERAL NOTES:

1. DIMENSIONS AND TOLERANCES ARE IN ACCORDANCE WITH ASME Y14.5M-1994.
2. APPROXIMATE WEIGHT = 900 LBS EMPTY.
3. DESIGN, FABRICATION, AND TESTING SHALL BE IN ACCORDANCE WITH CROSS FLOW FILTER SYSTEM PROCUREMENT SPECIFICATION 15-2-001.
4. ALL MATERIAL THICKNESS SHOWN EXCLUDING PROCESS PIPE ARE, REFERENCE ONLY. ACTUAL THICKNESS TO BE DETERMINED DURING DESIGN.

5 MATING SURFACES TO BE MACHINED AFTER FINAL WELDING.

5 SECURE GUIDE PINS AND STUDS WITH WELD ON BOTTOM SIDE OF FLANGE.

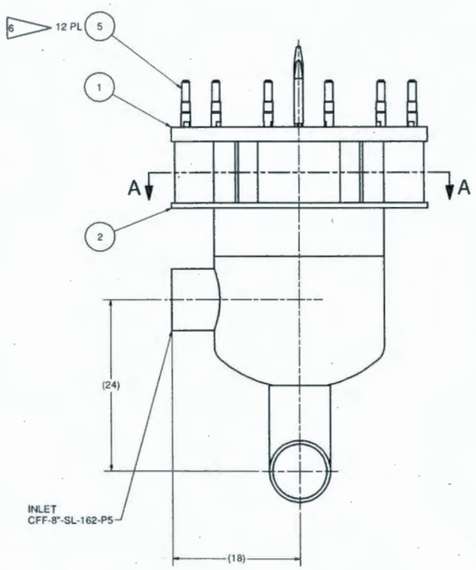

CFF-F-100 FILTER BASE DPD
SCALE 1/8

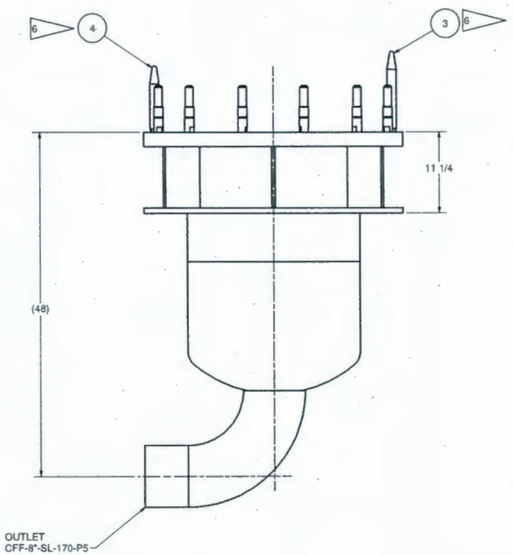

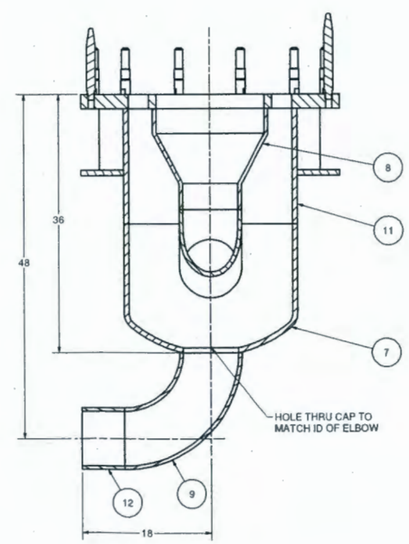

SECTION B-B
SCALE 1/8

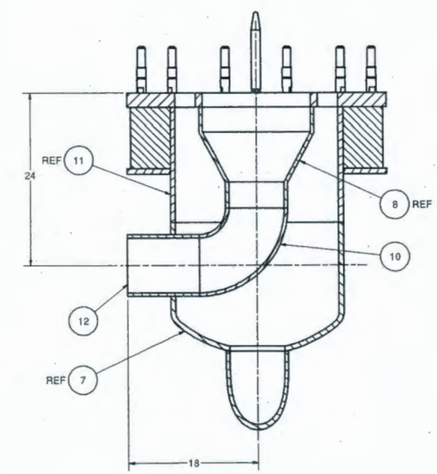

SECTION C-C
SCALE 1/8

UNLESS OTHERWISE SPECIFIED
ALL DIMENSIONS ARE IN INCHES.
REMOVE BURRS & SHARP EDGES.
THIRD ANGLE PROJECTION
TOLERANCES
.X = ±.1
.XX = ±.01
.XXX = ±.005
X/XX = ±1/16
ANGLE = ±.5 DEG
MACHINED SURFACES 125
MACHINED INSIDE
RADII = .04 ±.02

REVISION APPROVAL RECORD — REV 0

DISCIPLINE	BY	DATE	DISCIPLINE	BY	DATE
ARCH.	SF	9/19/16	MECHANICAL	DS	9/19/16
BUILDING SERVICES	N/A	N/A	PIPING	MJ	9/19/16
CIVIL	SF	9/19/16	PROCESS	MW	9/19/16
ELECTRICAL	CF	9/19/16	QA / QC	PB	9/19/16
ENVIRON.	N/A	N/A	STRUCTURAL	SF	9/19/16
GEN. ARRANG.	DJ	9/19/16			
I & C	HF	9/19/16			
HVAC	WL	9/19/16			

DRAWING STATUS

ISSUED	REV	DATE	SDE	PEM
APPROVED FOR BID	0	9/19/16	DS	BGA

NOT APPROVED FOR CONSTRUCTION UNLESS SIGNED AND DATED. DESTROY ALL PRINTS BEARING EARLIER DATE AND/OR REV.NO.

AECOM
URS ENERGY & CONSTRUCTION Inc. - an AECOM Company
ATKINS
AREVA

AECOM PROJECT NO.: 31269

DRAWING TRACEABILITY LIST

DWG NUMBER	TITLE

REF NUMBER	TITLE

NEXT USED ON H-16-001208-01

APROVED FOR BID
NOT FOR CONSTRUCTION

REVISIONS

REV	DESCRIPTION	ORG	CHK	APVD	IDV	DATE
0	APPROVED FOR BID	RC	DJ	DS	DKC	9/19/16

BLDG. NO. 202LP

INDEX NO. 2510 8409

CAUTION
NOT COMPLETE WITHOUT CURRENT CHANGE DOCUMENTS FROM DATABASE

ATTENTION
DESTROY THIS DOCUMENT BY SHREDDING
MAY CONTAIN SENSITIVE INFORMATION

NAME	DATE	COMPANY
DRAWN BY		
DRAFTING APPROVAL		
DISCIPLINE ENGINEER		
ENGINEER		

U.S. DEPARTMENT OF ENERGY
Office of River Protection

LAWPS
CFF FILTER MODULE CFF-P-03
CFF-F-100 FILTER BASE DPD

SIZE F | DRAWING NUMBER H-16-001212 | SHEET 1 | REV 0

SCALE NOTED

PLOTTED

DRAWING

H-16-001212-2

CFF FILTER MODULE CFF-P-03 CFF-F-100 FILTER BASE DPD

NOTES:

FOR GENERAL NOTES AND PARTS LIST SEE SHEET 1.

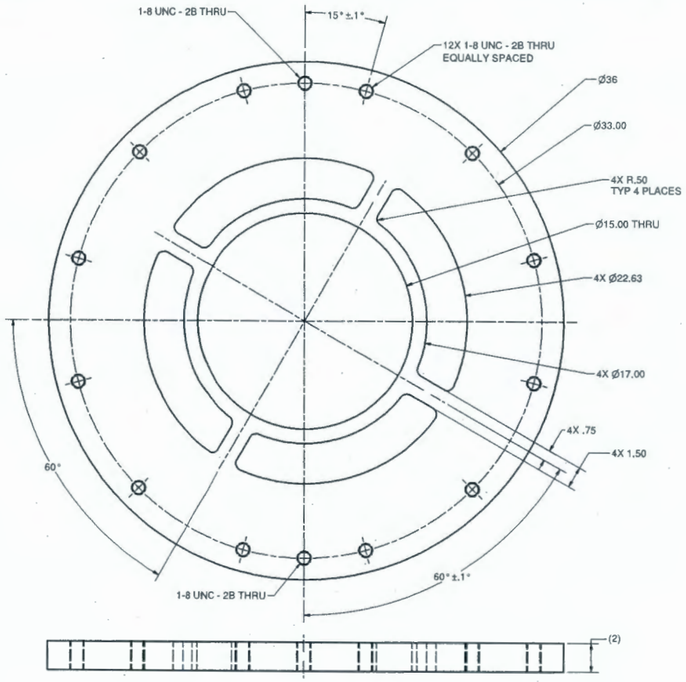

1 MOUNTING PLATE
SCALE: 1/4

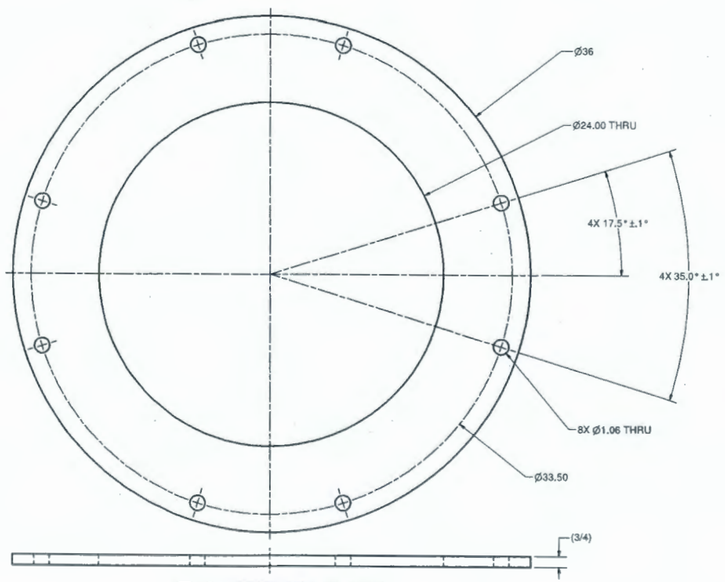

2 STIFFENER PLATE
SCALE: 1/4

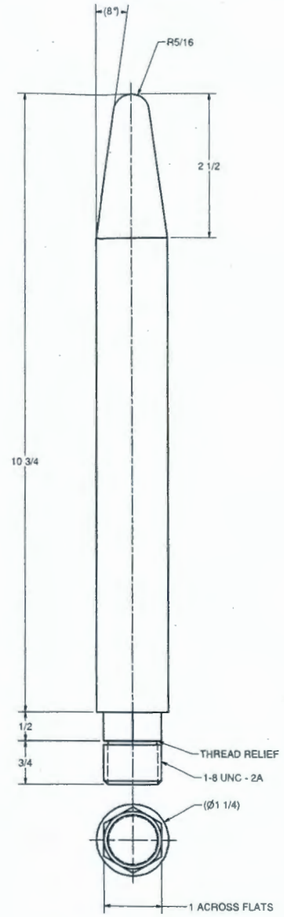

3 LONG GUIDE PIN
SCALE: 1/1

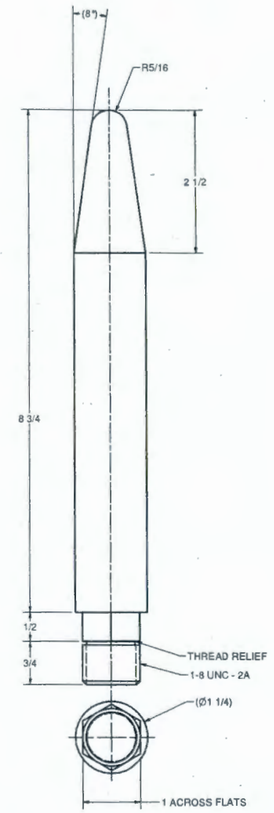

4 SHORT GUIDE PIN
SCALE: 1/1

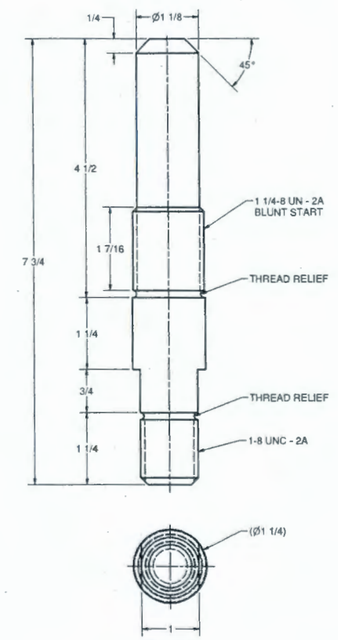

5 STUD
SCALE: 1/1

UNLESS OTHERWISE SPECIFIED

ALL DIMENSIONS ARE IN INCHES.
REMOVE BURRS & SHARP EDGES.

THIRD ANGLE PROJECTION

TOLERANCES
.X = ±.1
.XX = ±.01
.XXX = ±.005
X/XX = ±1/16
ANGLE = ±.5 DEG
MACHINED SURFACES 125
MACHINED INSIDE
RADII = .04 ±.02

REVISION APPROVAL RECORD				REV 0	
DISCIPLINE	BY	DATE	DISCIPLINE	BY	DATE
ARCH.	SF	9/19/16	MECHANICAL	DS	9/19/16
BUILDING SERVICES	N/A	N/A	PIPING	MJ	9/19/16
CIVIL	SF	9/19/16	PROCESS	MW	9/19/16
ELECTRICAL	CF	9/19/16	QA / QC	PB	9/19/16
ENVIRON.	N/A	N/A	STRUCTURAL	SF	9/19/16
GEN. ARRANG.	DJ	9/19/16			
I & C	HF	9/19/16			
HVAC	WL	9/19/16			

DRAWING STATUS				
ISSUED	REV	DATE	SDE	PEM
APPROVED FOR BID	0	9/19/16	DS	BGA

NOT APPROVED FOR CONSTRUCTION UNLESS SIGNED AND DATED. DESTROY ALL PRINTS BEARING EARLIER DATE AND/OR REV.NO.

AECOM
URS ENERGY & CONSTRUCTION Inc. - an AECOM Company
ATKINS
AREVA

AECOM PROJECT NO.: 31269

DWG NUMBER	TITLE
	DRAWING TRACEABILITY LIST

REF NUMBER	TITLE
	REFERENCES
NEXT USED ON	SHEET 1

APROVED FOR BID
NOT FOR CONSTRUCTION

REV	DESCRIPTION	ORG	CHK	APVD	IDV	DATE
0	APPROVED FOR BID	RC	DJ	DS	DKC	9/19/16

REVISIONS

BLDG. NO. 202LP

INDEX NO. 2510 8409

CAUTION
NOT COMPLETE WITHOUT CURRENT CHANGE DOCUMENTS FROM OATABASE

ATTENTION
DESTROY THIS DOCUMENT BY SHREDDING MAY CONTAIN SENSITIVE INFORMATION

NAME	DATE	COMPANY
DRAWN BY		
DISCIPLINE APPROVAL		
DISCIPLINE ENGINEER		
ENGINEER		

U.S. DEPARTMENT OF ENERGY
Office of River Protection

LAWPS
CFF FILTER MODULE CFF-P-03
CFF-F-100 FILTER BASE DPD

SIZE	DRAWING NUMBER	SHEET	REV
F	H-16-001212	2	0

SCALE NOTED

PLOTID

DRAWING

H-16-001213-1

CFF FILTER MODULE CFF-P-03 CFF-F-101 FILTER BASE DPD

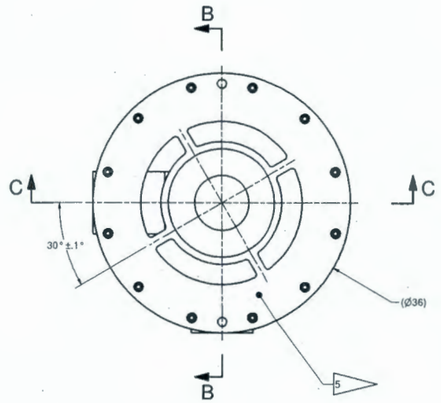

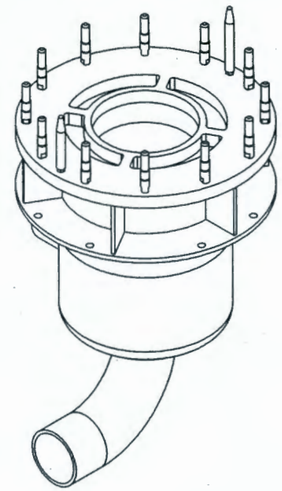

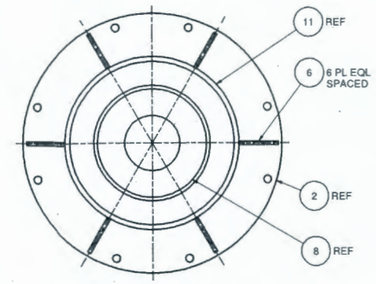

SECTION A-A
SCALE 1/8

PARTS/MATERIAL LIST

QL	QTY	PART/DRAWING NUMBER	NOMENCLATURE/DESCRIPTION	MATERIAL/REFERENCE	SH	ITEM
FQA	1	N/A	MOUNTING PLATE, 2 THICK	ASTM A240 316L SST	1,2	1
FQA	1	H-16-001212-01, ITEM 2	STIFFENER PLATE	N/A	1	2
FQA	1	H-16-001212-01, ITEM 3	LONG GUIDE PIN	N/A	1	3
FQA	1	H-16-001212-01, ITEM 4	SHORT GUIDE PIN	N/A	1	4
FQA	12	H-16-001212-01, ITEM 5	STUD	N/A	1	5
FQA	12	N/A	PLATE, 5 1/2 X 8 1/2 X 1/2 THK	ASTM A240 316L SST	1	6
FQA	1	N/A	CAP, 24 INCH OD, SCHED 40 (.687 WALL)	ASTM A403 W316/316L-S SST	1	7
FQA	1	N/A	REDUCER, CONCENTRIC 8 X 16 SCHED 80	ASTM A403 W316/316L-S SST	1	8
FQA	1	N/A	ELBOW, 8 INCH LR 90 DEG SCHED 80	ASTM A403 W316/316L-S SST	1	9
FQA	1	N/A	ELBOW, 8 INCH SR 90 DEG SCHED 80	ASTM A403 W316/316L-S SST	1	10
FQA	AR	N/A	PIPE, 24 INCH, SCHED 40S (.687 WALL)	ASTM A312 TP316/316L SST	1	11
FQA	AR	N/A	PIPE, 8 INCH SCHED 80S	ASTM A312 TP316/316L SST	1	12

GENERAL NOTES:

1. DIMENSIONS AND TOLERANCES ARE IN ACCORDANCE WITH ASME Y14.5M-1994.
2. APPROXIMATE WEIGHT = 900 LBS EMPTY.
3. DESIGN, FABRICATION, AND TESTING SHALL BE IN ACCORDANCE WITH CROSS FLOW FILTER SYSTEM PROCUREMENT SPECIFICATION 15-2-001.
4. ALL MATERIAL THICKNESS SHOWN EXCLUDING PROCESS PIPE ARE REFERENCE ONLY. ACTUAL THICKNESS TO BE DETERMINED DURING DESIGN.

5 MATING SURFACES TO BE MACHINED AFTER FINAL WELDING.

6 SECURE GUIDE PINS AND STUDS WITH WELD ON BOTTOM SIDE OF FLANGE.

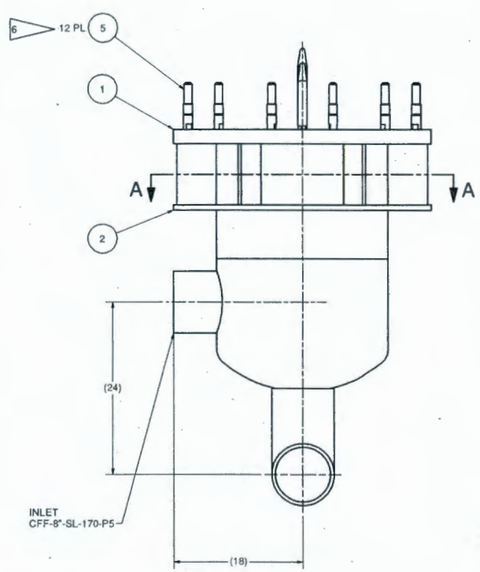

CFF-F-101 FILTER BASE DPD
SCALE 1/8

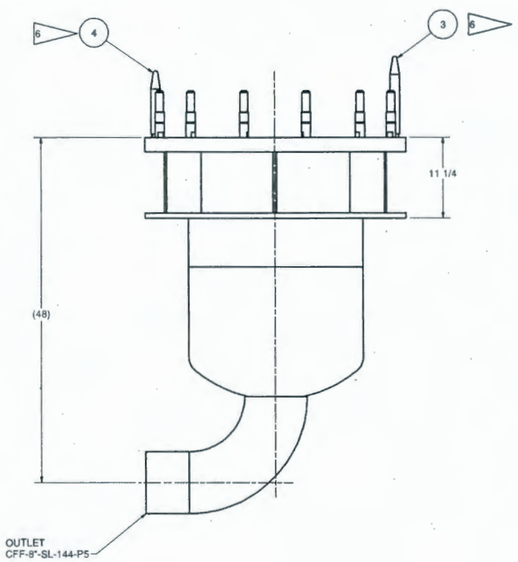

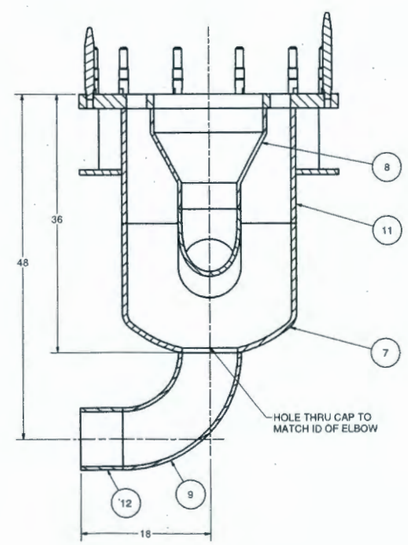

SECTION B-B
SCALE 1/8

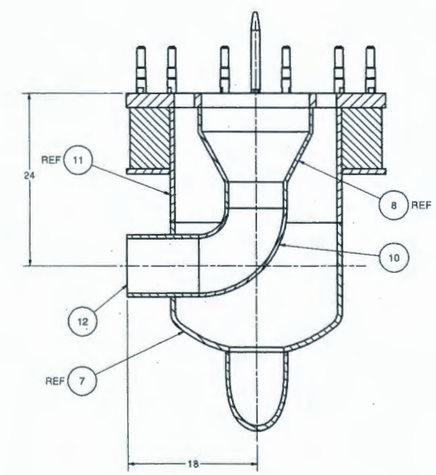

SECTION C-C
SCALE 1/8

UNLESS OTHERWISE SPECIFIED
ALL DIMENSIONS ARE IN INCHES.
REMOVE BURRS & SHARP EDGES.
THIRD ANGLE PROJECTION
TOLERANCES
.X = ±.1
.XX = ±.01
.XXX = ±.005
X/XX = ±1/16
ANGLE = ±.5 DEG
MACHINED SURFACES 125
MACHINED INSIDE
RADII = .04 ±.02

REVISION APPROVAL RECORD — REV 0

DISCIPLINE	BY	DATE	DISCIPLINE	BY	DATE
ARCH.	SF	9/19/16	MECHANICAL	DS	9/19/16
BUILDING SERVICES	N/A	N/A	PIPING	MJ	9/19/16
CIVIL	SF	9/19/16	PROCESS	MW	9/19/16
ELECTRICAL	CF	9/19/16	QA / QC	PB	9/19/16
ENVIRON.	N/A	N/A	STRUCTURAL	SF	9/19/16
GEN. ARRANG.	DJ	9/19/16			
I & C	HF	9/19/16			
HVAC	WL	9/19/16			

DRAWING STATUS

ISSUED	REV	DATE	SDE	PEM
APPROVED FOR BID	0	9/19/16	DS	BGA

NOT APPROVED FOR CONSTRUCTION UNLESS SIGNED AND DATED. DESTROY ALL PRINTS BEARING EARLIER DATE AND/OR REV.NO.

AECOM
URS ENERGY & CONSTRUCTION Inc. - an AECOM Company
ATKINS
AREVA

AECOM PROJECT NO.: 31259

DWG NUMBER	TITLE
	DRAWING TRACEABILITY LIST

REF NUMBER	TITLE
	REFERENCES
NEXT USED ON	H-16-0012010-01

APROVED FOR BID
NOT FOR CONSTRUCTION

REV	DESCRIPTION	ORG	CHK	APVD	IDV	DATE
0	APPROVED FOR BID	RC	DJ	DS	DKC	9/19/16

REVISIONS

BLDG. NO. 202LP

INDEX NO. 2510 8409

CAUTION
NOT COMPLETE WITHOUT CURRENT CHANGE DOCUMENTS FROM DATABASE

ATTENTION
DESTROY THIS DOCUMENT BY SHREDDING MAY CONTAIN SENSITIVE INFORMATION

	NAME	DATE	COMPANY
DRAWN BY			
DRAFTING APPROVAL			
DISCIPLINE ENGINEER			
ENGINEER			

U.S. DEPARTMENT OF ENERGY
Office of River Protection

LAWPS
CFF FILTER MODULE CFF-P-03
CFF-F-101 FILTER BASE DPD

SIZE F | DRAWING NUMBER H-16-001213 | SHEET 1 | REV 0

SCALE NOTED

PLOTID

DOE_TB_F.DWG (NOV 01-05)

DRAWING

H-16-001213-2

CFF FILTER MODULE CFF-P-03 CFF-F-101 FILTER BASE DPD

NOTES:

FOR GENERAL NOTES AND PARTS LIST SEE SHEET 1.

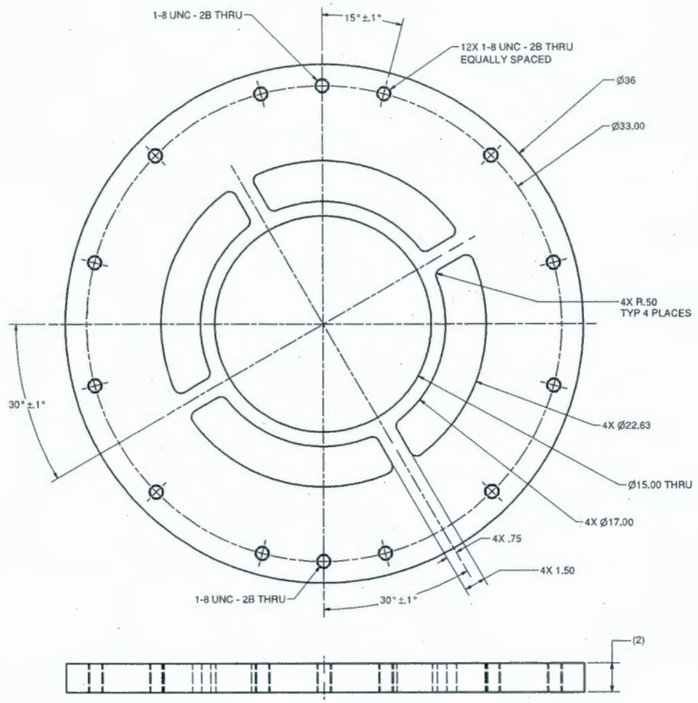

1 MOUNTING PLATE
SCALE: 1/4

UNLESS OTHERWISE SPECIFIED

ALL DIMENSIONS ARE IN INCHES.
REMOVE BURRS & SHARP EDGES.

THIRD ANGLE PROJECTION

TOLERANCES
.X = ±.1
.XX = ±.01
.XXX = ±.005
X/XX = ±1/16
ANGLE = ±.5 DEG
MACHINED SURFACES 125
MACHINED INSIDE
RADII = .04 ±.02

REVISION APPROVAL RECORD — REV 0

DISCIPLINE	BY	DATE	DISCIPLINE	BY	DATE
ARCH.	SF	9/19/16	MECHANICAL	DS	9/19/16
BUILDING SERVICES	N/A	N/A	PIPING	MJ	9/19/16
CIVIL	SF	9/19/16	PROCESS	MW	9/19/16
ELECTRICAL	CF	9/19/16	QA / QC	PB	9/19/16
ENVIRON.	N/A	N/A	STRUCTURAL	SF	9/19/16
GEN. ARRANG.	DJ	9/19/16			
I & C	HF	9/19/16			
HVAC	WL	9/19/16			

DRAWING STATUS

ISSUED	REV	DATE	SDE	PEM
APPROVED FOR BID	0	9/19/16	DS	BGA

NOT APPROVED FOR CONSTRUCTION UNLESS SIGNED AND DATED. DESTROY ALL PRINTS BEARING EARLIER DATE AND/OR REV.NO.

AECOM
URS ENERGY & CONSTRUCTION Inc. - an AECOM Company
ATKINS
AREVA

AECOM PROJECT NO.: 31269

DRAWING TRACEABILITY LIST

DWG NUMBER	TITLE

REFERENCES

REF NUMBER	TITLE

NEXT USED ON SHEET 1

APROVED FOR BID
NOT FOR CONSTRUCTION

REVISIONS

REV	DESCRIPTION	ORG	CHK	APVD	IDV	DATE
0	APPROVED FOR BID	RC	DJ	DS	DKC	9/19/16

REV NO.	DESCRIPTION

BLDG. NO. 202LP

INDEX NO. 2510 8409

CAUTION
NOT COMPLETE WITHOUT CURRENT CHANGE DOCUMENTS FROM DATABASE

ATTENTION
DESTROY THIS DOCUMENT BY SHREDDING MAY CONTAIN SENSITIVE INFORMATION

NAME	DATE	COMPANY
DRAWN BY		
DESIGNER APPROVAL		
DISCIPLINE ENGINEER		
ENGINEER		

U.S. DEPARTMENT OF ENERGY
Office of River Protection

LAWPS
CFF FILTER MODULE CFF-P-03
CFF-F-101 FILTER BASE DPD

SIZE F | DRAWING NUMBER H-16-001213 | SHEET 2 | REV 0

SCALE NOTED

PLOTTED

DRAWING

H-16-001275-1

CFF AND FFT PIT/VAULT LLP EQUIPMENT INTERFACE

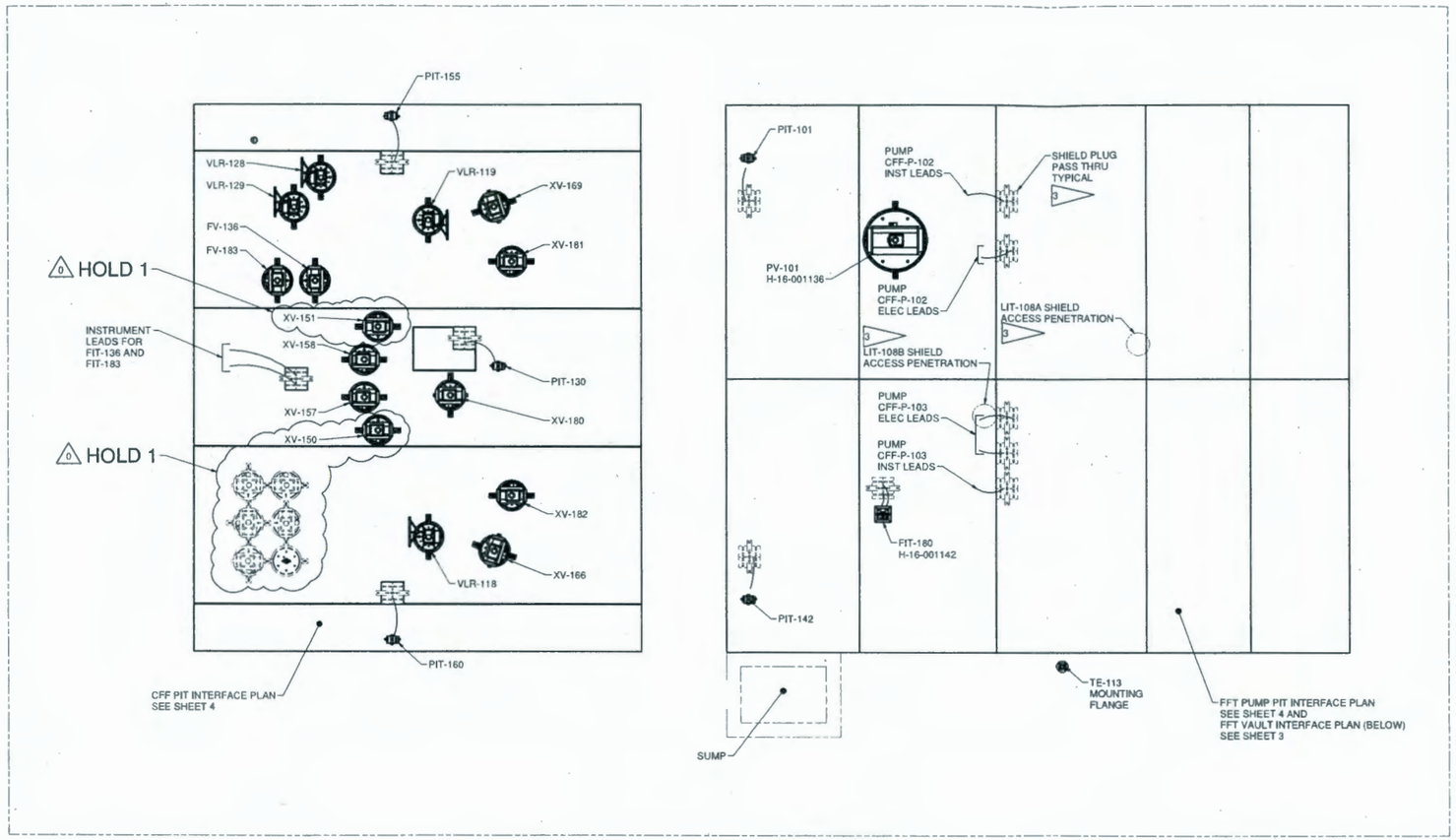

CFF AND FFT SYSTEM INTERFACE PLAN
OPERATING DECK

SCALE 1/2"=1'-0"

GENERAL NOTES:

1. DIMENSIONS AND TOLERANCES ARE IN ACCORDANCE WITH ASME Y14.5M-1994.
2. THE PURPOSE OF THIS DRAWING IS TO IDENTIFY COMPONENTS INCLUDED IN THE CROSS FLOW FILTER SYSTEM AND INTRFACE LOCATIONS. FOR FABRICATION SEE CROSS FLOW FILTER SYSTEM PROCUREMENT SPECIFICATION 15-2-001.

3. ITEM IS NOT PART OF THE LONG LEAD PROCURMENT (LLP). SHOWN FOR INFORMATION ONLY.

4. ANCHOR WILL BE AT WALL. PIPE IS CONTAINED IN WALL SLEEVE WITH AN EMBEDED WALL PLATE. THE END OF THE SLEEVE WILL BE SEALED CLOSED WITH A PLATE WELDED TO THE PIPE AND TO THE EMBEDED WALL PLATE TO BOTH SUPPORT THE PIPE AND ALSO TO CLOSE THE WALL PENETRATION BETWEEN PITS AND/OR VAULTS. VENDOR TO PROVIDE ANCHOR LOADS AT THIS LOCATION TO THE BUYER TO VERIFY WALL EMBEDMENT ANCHOR DESIGN. VENDOR IS RESPONSIBLE FOR PIPE DESIGN FROM SKID TO ANCHOR POINT.

5. THERE ARE U-BOLT SUPPORTS INTERNAL TO THE SKID DESIGN AT THIS LOCATIONS. THESE U-BOLTS SUPPORTS WILL BE REMOVED WHEN FINAL CONNECTION IS MADE IN PIT/VAULT TO REMOVE ANCHOR CONSTRAINT ON PIPE.

6. SKIDS ARE ANCHORED TO BASE PLATES EMBEDED IN FLOOR. THERE IS A 1 INCH SPACE FOR WELDED SHIMS TO PROVIDE ADJUSTEMENT DURING SKID INSTALLATION. SKID WILL BE WELDED TO SHIM PLATES AND SHIM PLATES WILL BE WELEDED TO EMEBED PLATES. VENDOR TO PROVIDE ANCHOR LOADS AT ALL BASE PLATES TO THE BUYER TO VERIFY EMBEDMENT ANCHOR DESIGN.

7. THERE ARE PIPING CONNECTIONS THAT DO NOT HAVE COMPLETED PIPE ROUTING AND WILL HAVE ANCHOR POINTS ON SKID. VENDOR TO PROVIDE MAXIMUM ALLOWABLE LOADS AT THESE ANCHOR POINTS TO THAT BUYER CAN VERIFY THAT THE PIPING DESIGN WILL BE WITHIN THE ALLOWABLE LOAD REQUIREMENTS.

8. THE FILTER FEED TANK WILL BE WELDED TO EMBEDED BASE PLATES. VENDOR TO PROVIDE LOADS AT THE BASE PLATES TO BUYER TO VERIFY EMBEDMENT ANCHOR DESIGN.

9. VENDOR SHALL PROVIDE PIPE AND ELBOW AS A COMPLETE SPOOL PIECE FOR THIS SECTION. VENDOR SHALL ALSO PROVIDE AN ADDITIONAL 12 INCHS OF PIPE ON EACH END OF PIPE SPOOL FOR FIELD FIT UP.

HOLD TABLE

HOLD NO.	DESCRIPTION	RELEASE DATE
1	BACKPULSE IMPLEMENTATION TO BE DETERMINED BASED ON TESTING RESULTS	BY VENDOR ON APPROVAL BY BUYER

REVISION APPROVAL RECORD				REV 0	
DISCIPLINE	BY	DATE	DISCIPLINE	BY	DATE
ARCH.	SF	9/19/16	MECHANICAL	DS	9/19/16
BUILDING SERVICES	N/A	N/A	PIPING	MJ	9/19/16
CIVIL	SF	9/19/16	PROCESS	MW	9/19/16
ELECTRICAL	CF	9/19/16	QA / QC	PB	9/19/16
ENVIRON.	N/A	N/A	STRUCTURAL	SF	9/19/16
GEN. ARRANG.	DJ	9/19/16			
I & C	HF	9/19/16			
HVAC	WL	9/19/16			

DRAWING STATUS				
ISSUED	REV	DATE	SDE	PEM
APPROVED FOR BID	0	9/19/16	DS	BGA

NOT APPROVED FOR CONSTRUCTION UNLESS SIGNED AND DATED. DESTROY ALL PRINTS BEARING EARLIER DATE AND/OR REV.NO.

AECOM
URS ENERGY & CONSTRUCTION Inc. - an AECOM Company
ATKINS
AREVA

AECOM PROJECT NO.: 31259

DWG NUMBER	TITLE
DRAWING TRACEABILITY LIST	

REF NUMBER	TITLE
NEXT USED ON	END ITEM

REFERENCES

APPROVED FOR BID
NOT FOR CONSTRUCTION

REV	DESCRIPTION	ORG	CHK	APVD	IDV	DATE
0	APPROVED FOR BID	RC	DJ	DS	DKC	9/19/16

REVISIONS

BLDG. NO. 202LP

BLDG. NO. 2500 8405 8409

CAUTION
NOT COMPLETE WITHOUT CURRENT CHANGE DOCUMENTS FROM DATABASE

ATTENTION
DESTROY THIS DOCUMENT BY SHREDDING MAY CONTAIN SENSITIVE INFORMATION

NAME	DATE	COMPANY
DRAWN BY		
CHECKING APPROVAL		
DISCIPLINE ENGINEER		
DESIGNER		

U.S. DEPARTMENT OF ENERGY
Office of River Protection

LAWPS
CFF AND FFT PIT/VAULT
LLP EQUIPMENT INTERFACE

SIZE F | DRAWING NUMBER H-16-001275 | SHEET 1 | REV 0

SCALE NOTED

PLOTID

DRAWING

H-16-001275-2

CFF AND FFT PIT/VAULT LLP EQUIPMENT INTERFACE

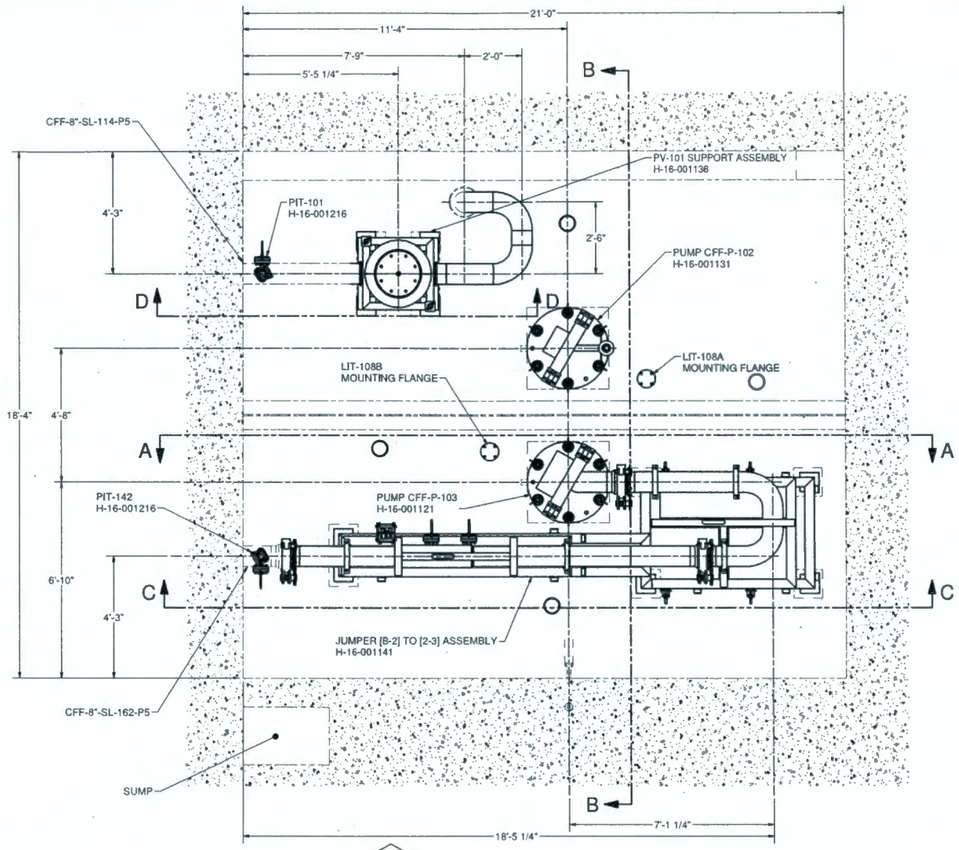

FFT PUMP PIT INTERFACE PLAN

SCALE 1/2"=1'-0"
SHIELD PLATES NOT SHOWN FOR CLARITY

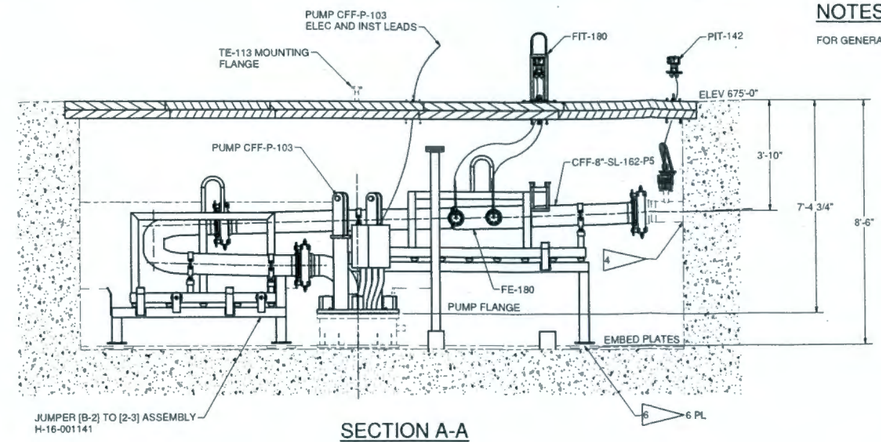

SECTION A-A

SCALE 1/2"=1'-0"

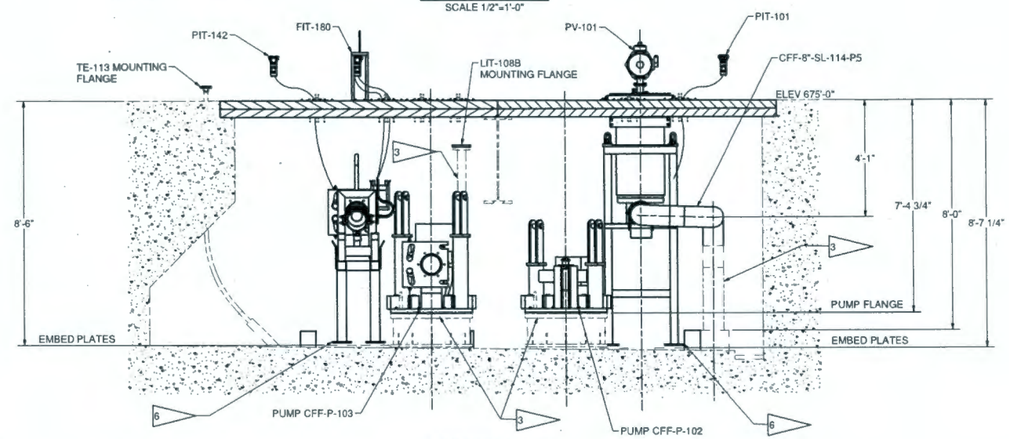

SECTION B-B

SCALE 1/2"=1'-0"

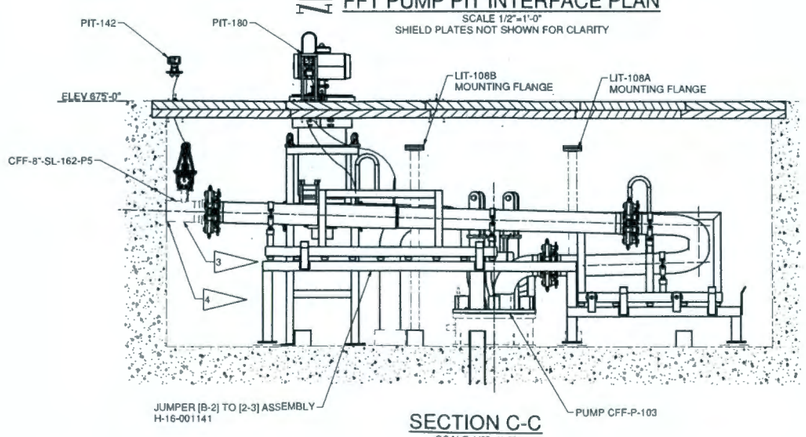

SECTION C-C

SCALE 1/2"=1'-0"

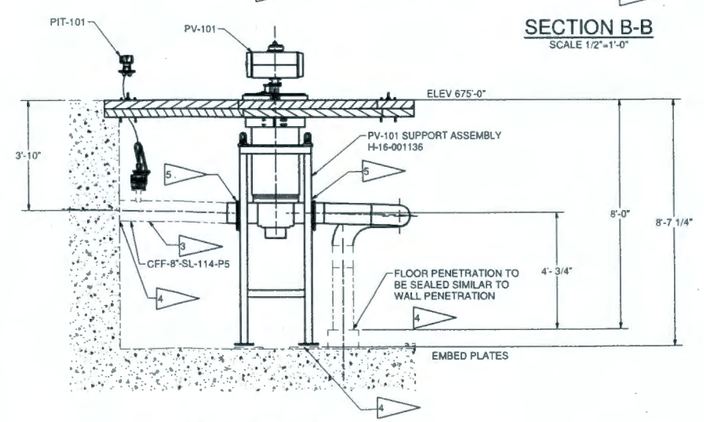

SECTION D-D

SCALE 1/2"=1'-0"

NOTES:

FOR GENERAL NOTES SEE SHEET 1.

REVISION APPROVAL RECORD					REV 0
DISCIPLINE	BY	DATE	DISCIPLINE	BY	DATE
ARCH.	SF	9/19/16	MECHANICAL	DS	9/19/16
BUILDING SERVICES	N/A	N/A	PIPING	MJ	9/19/16
CIVIL	SF	9/19/16	PROCESS	MW	9/19/16
ELECTRICAL	CF	9/19/16	QA / QC	PB	9/19/16
ENVIRON.	N/A	N/A	STRUCTURAL	SF	9/19/16
GEN. ARRANG.	DJ	9/19/16			
I & C	HF	9/19/16			
HVAC	WL	9/19/16			

DRAWING STATUS				
ISSUED	REV	DATE	SDE	PEM
APPROVED FOR BID	0	9/19/16	DS	BGA

NOT APPROVED FOR CONSTRUCTION UNLESS SIGNED AND DATED. DESTROY ALL PRINTS BEARING EARLIER DATE AND/OR REV.NO.

AECOM
URS ENERGY & CONSTRUCTION Inc. - an AECOM Company
ATKINS
AREVA

AECOM PROJECT NO. 31269

DWG NUMBER	TITLE
DRAWING TRACEABILITY LIST	

REF NUMBER	TITLE
REFERENCES	
NEXT USED ON	SEE SHEET 1

APPROVED FOR BID
NOT FOR CONSTRUCTION

REV	DESCRIPTION	ORG	CHK	APVD	IDV	DATE
0	APPROVED FOR BID	RC	DJ	DS	DKC	9/19/18

REVISIONS

BLDG. NO. 202LP

INDEX NO. 2500 8405 8409

CAUTION
NOT COMPLETE WITHOUT CURRENT CHANGE DOCUMENTS FROM DATABASE

ATTENTION
DESTROY THIS DOCUMENT BY SHREDDING MAY CONTAIN SENSITIVE INFORMATION

NAME	DATE	COMPANY

U.S. DEPARTMENT OF ENERGY
Office of River Protection

LAWPS
CFF AND FFT PIT/VAULT
LLP EQUIPMENT INTERFACE

SIZE	DRAWING NUMBER	SHEET	REV
F	H-16-001275	2	0

SCALE NOTED

PLOTTED

DRAWING

H-16-001275-3

CFF AND FFT PIT/VAULT LLP EQUIPMENT INTERFACE

NOTES:

FOR GENERAL NOTES SEE SHEET 1.

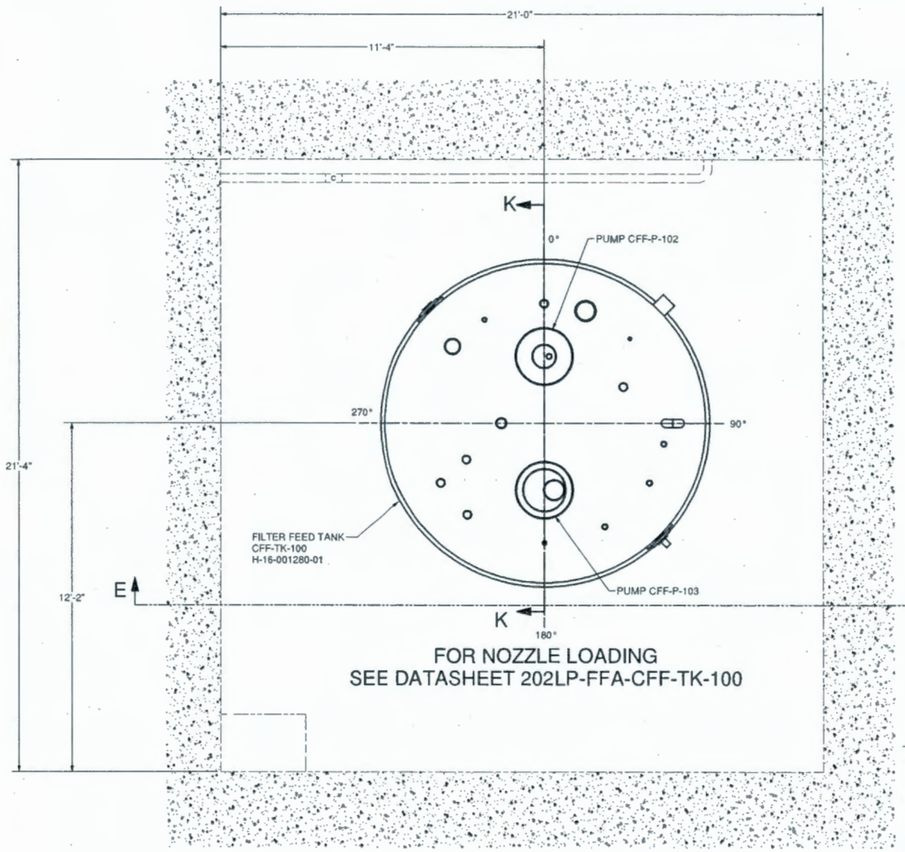

FFT VAULT INTERFACE PLAN

SCALE 1/2"=1'-0"

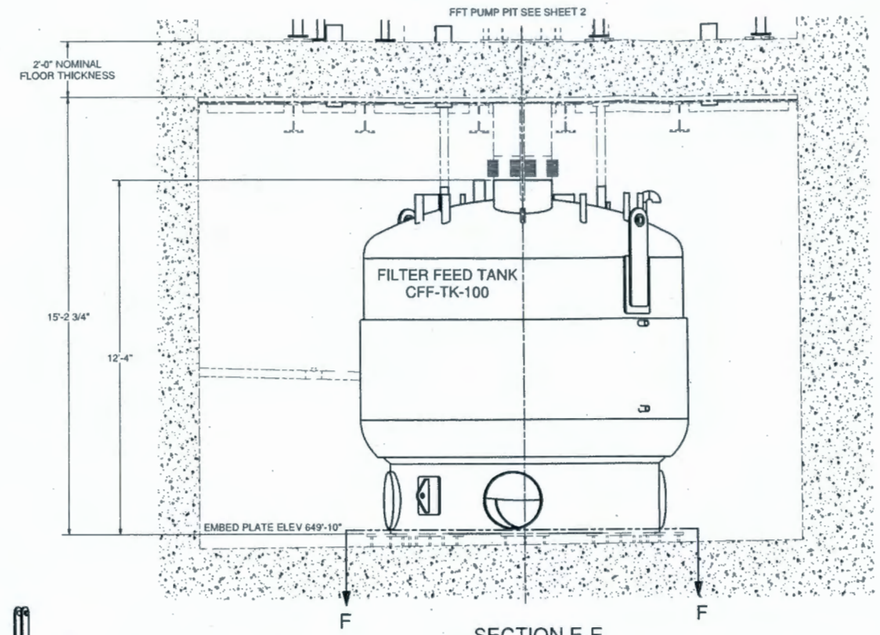

SECTION E-E

SCALE 1/2"=1'-0"

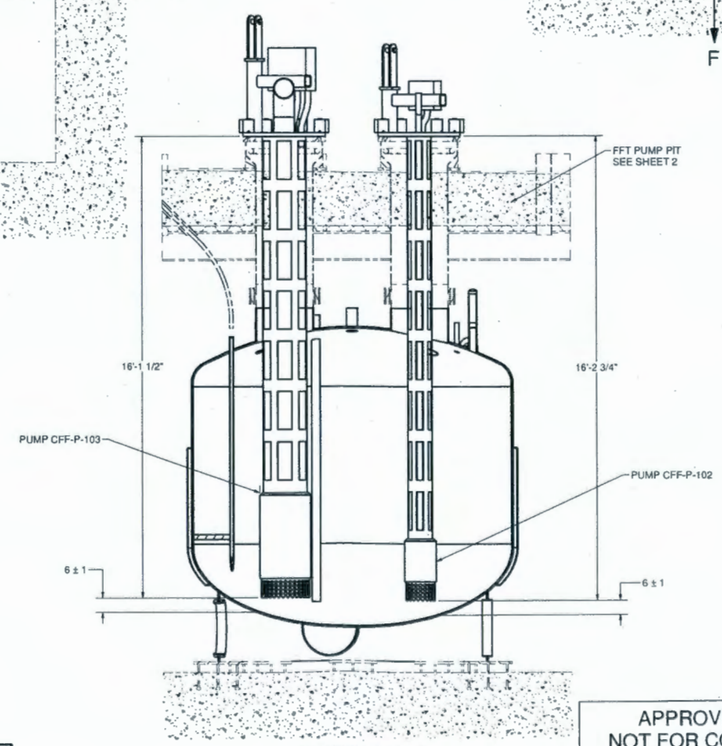

SECTION K-K

SCALE 1/2"=1'-0"

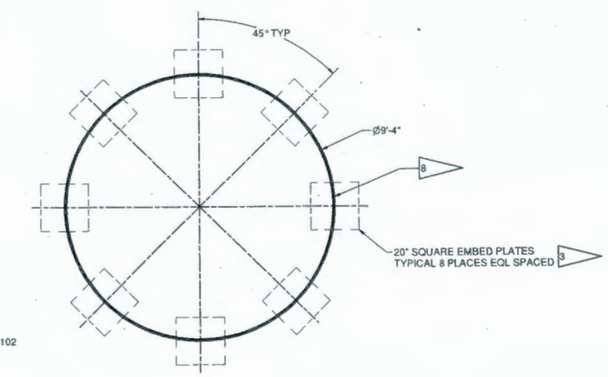

SECTION F-F

SCALE 1/2"=1'-0"

APPROVED FOR BID
NOT FOR CONSTRUCTION

REV	DESCRIPTION	ORG	CHK	APVD	IDV	DATE
0	APPROVED FOR BID	RC	DJ	DS	DKC	9/19/16

REVISIONS

REVISION APPROVAL RECORD					REV 0
DISCIPLINE	BY	DATE	DISCIPLINE	BY	DATE
ARCH.	SF	9/19/16	MECHANICAL	DS	9/19/16
BUILDING SERVICES	N/A	N/A	PIPING	MJ	9/19/16
CIVIL	SF	9/19/16	PROCESS	MW	9/19/16
ELECTRICAL	CF	9/19/16	QA / QC	PB	9/19/16
ENVIRON.	N/A	N/A	STRUCTURAL	SF	9/19/16
GEN. ARRANG.	DJ	9/19/16			
I & C	HF	9/19/16			
HVAC	WL	9/19/16			

DRAWING STATUS				
ISSUED	REV	DATE	SDE	PEM
APPROVED FOR BID	0	9/19/16	DS	BGA

NOT APPROVED FOR CONSTRUCTION UNLESS SIGNED AND DATED. DESTROY ALL PRINTS BEARING EARLIER DATE AND/OR REV.NO.

AECOM

URS ENERGY & CONSTRUCTION Inc. - an AECOM Company

ATKINS

AREVA

AECOM PROJECT NO.: 31269

DWG NUMBER	TITLE

DRAWING TRACEABILITY LIST

REF NUMBER	TITLE

REFERENCES

NEXT USED ON SEE SHEET 1

BLDG. NO. 202LP

BATCH NO. 2500 8405 8409

CAUTION
NOT COMPLETE WITHOUT CURRENT CHANGE DOCUMENTS FROM DATABASE

ATTENTION
DESTROY THIS DOCUMENT BY SHREDDING MAY CONTAIN SENSITIVE INFORMATION

NAME	DATE	COMPANY
DRAWN BY		
DRAFTING APPROVAL		
DOCT'N AND ENGINEER		
ENGINEERING CHECKER		
CITSECT AUTHORITY		

U.S. DEPARTMENT OF ENERGY
Office of River Protection

LAWPS
CFF AND FFT PIT/VAULT
LLP EQUIPMENT INTERFACE

REV F | DRAWING NUMBER H-16-001275 | SHEET 3 | REV 0

SCALE NOTED

PLOTID

DGE_TB_F.DWG NOV 21'16

DRAWING

H-16-001275-4

CFF AND FFT PIT/VAULT LLP EQUIPMENT INTERFACE

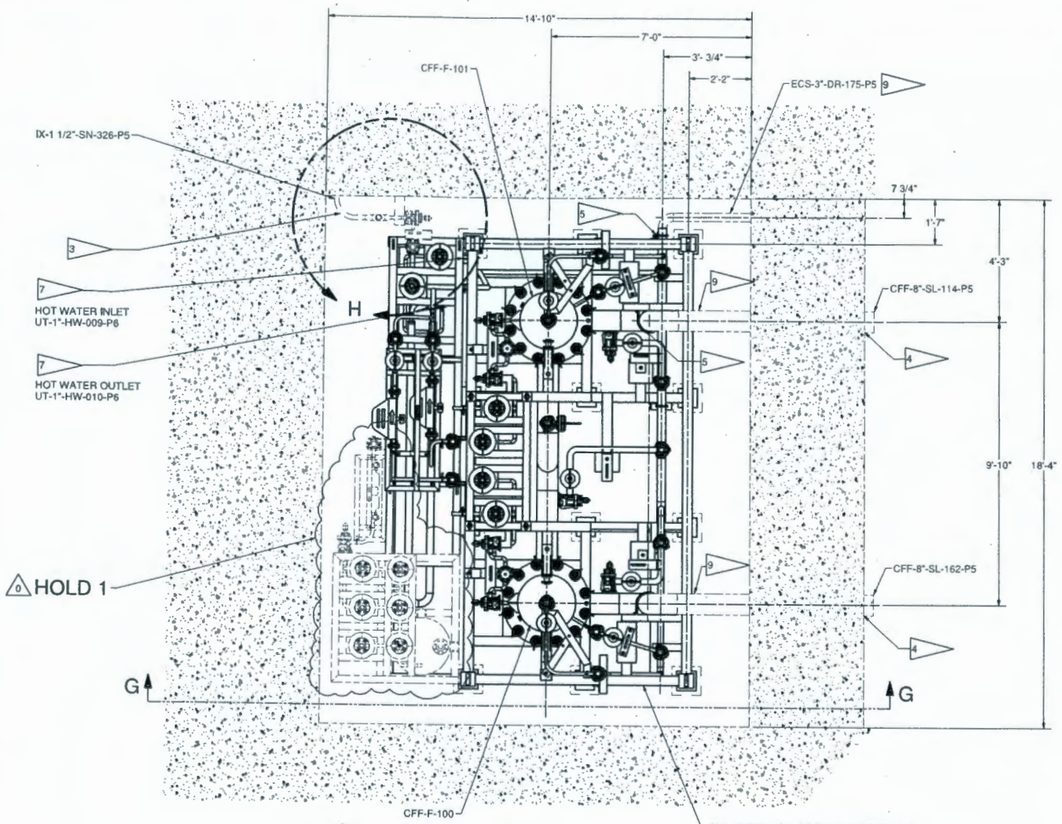

CFF PIT INTERFACE PLAN

SCALE 1/2"=1'-0"
SHIELD PLATES REMOVED FOR CLARITY

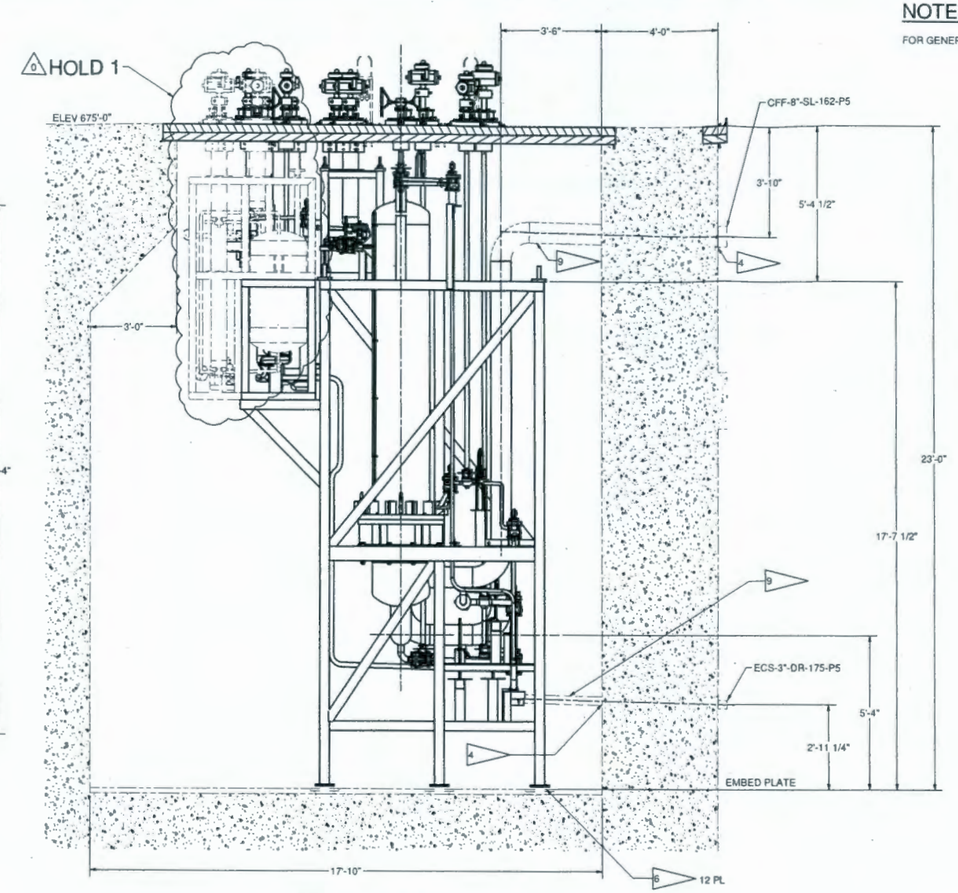

SECTION G-G

SCALE 1/2"=1'-0"

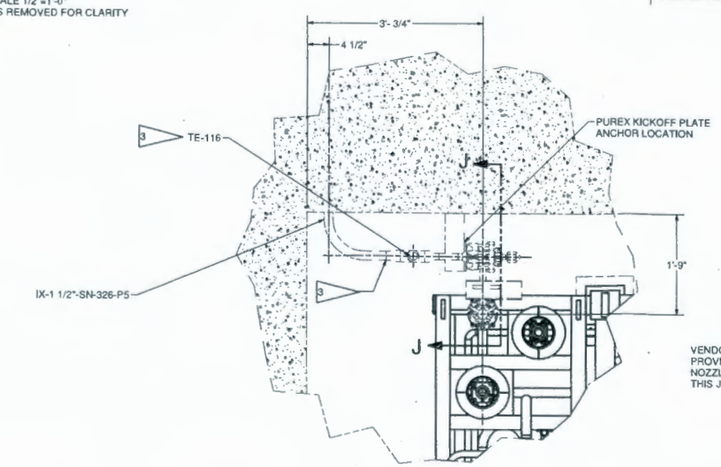

DETAIL H

SCALE 1" = 1'-0"

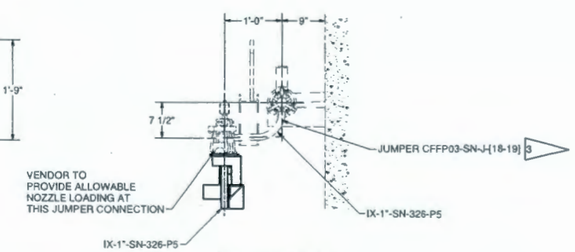

SECTION J-J

SCALE 1" = 1'-0"

NOTES:

FOR GENERAL NOTES SEE SHEET 1.

REVISION APPROVAL RECORD					REV 0
DISCIPLINE	BY	DATE	DISCIPLINE	BY	DATE
ARCH.	SF	9/19/16	MECHANICAL	DS	9/19/16
BUILDING SERVICES	N/A	N/A	PIPING	MJ	9/19/16
CIVIL	SF	9/19/16	PROCESS	MW	9/19/16
ELECTRICAL	CF	9/19/16	QA / QC	PB	9/19/16
ENVIRON.	N/A	N/A	STRUCTURAL	SF	9/19/16
GEN. ARRANG.	DJ	9/19/16			
I & C	HF	9/19/16			
HVAC	VL	9/19/16			

DRAWING STATUS				
ISSUED	REV	DATE	SDE	PEM
APPROVED FOR BID	0	9/19/16	DS	BGA

NOT APPROVED FOR CONSTRUCTION UNLESS SIGNED AND DATED. DESTROY ALL PRINTS BEARING EARLIER DATE AND/OR REV NO.

AECOM
URS ENERGY & CONSTRUCTION Inc. - an AECOM Company
ATKINS
AREVA

AECOM PROJECT NO.: 31269

DWG NUMBER	TITLE

DRAWING TRACEABILITY LIST

REF NUMBER	TITLE

REFERENCES

NEXT USED ON SEE SHEET 1

APPROVED FOR BID
NOT FOR CONSTRUCTION

REV	DESCRIPTION	ORG	CHK	APVD	IDV	DATE
0	APPROVED FOR BID	RC	DJ	DS	DKC	9/19/16

REVISIONS

BLDG. NO. 202LP

INDEX NO. 2500 8405 8409

CAUTION
NOT COMPLETE WITHOUT CURRENT CHANGE DOCUMENTS FROM DATABASE

ATTENTION
DESTROY THIS DOCUMENT BY SHREDDING MAY CONTAIN SENSITIVE INFORMATION

NAME	DATE	COMPANY
DRAWN BY		
CRITICAL APPROVAL		
DISCIPLINE ENGINEER		
ENGINEERING CHECKER		
DESIGN AUTHORITY		

U.S. DEPARTMENT OF ENERGY
Office of River Protection

LAWPS
CFF AND FFT PIT/VAULT
LLP EQUIPMENT INTERFACE

SIZE F | DRAWING NUMBER H-16-001275 | SHEET 4 | REV 0

SCALE NOTED

PLOTTED

DRAWING

H-16-001280-1

FILTER TANK VAULT CFF-V-01 TANK CFF-TK-100 DPD

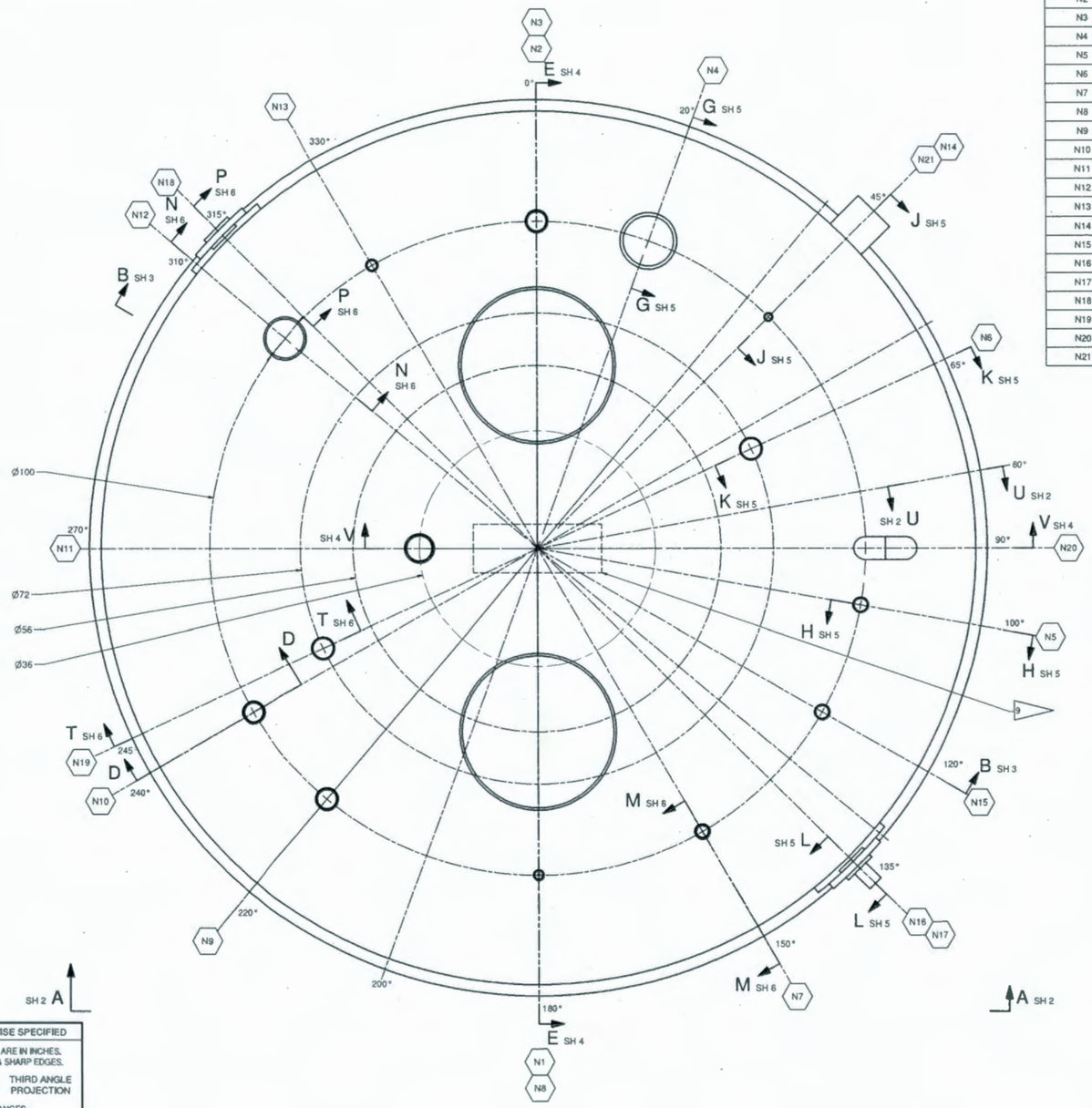

TANK CFF-TK-100 DPD
SCALE 1/8

NOZZLE SCHEDULE						
NOZZLE NO.	NOZZLE DESCRIPTION	NOZZLE SIZE	NOZZLE TYPE	NOZZLE LOCATION	NOZZLE ORIENTATION	DETAIL
N1	PUMP CFF-P-103, (24" PORT)	24" SCHED STD	BW	TOP	180 DEG	SECTION E-E, SHEET 4
N2	PUMP CFF-P-102, (24" PORT)	24" SCHED STD	BW	TOP	0 DEG	SECTION E-E, SHEET 4
N3	SPARE, (CFF-3"-DR-186-P5)	3" SCHED 80S	BW	TOP	0 DEG	DETAIL D, SHEET 3
N4	RETURN FROM CFF, (CFF-8"-SL-114-P5)	8" SCHED 80S	BW	TOP	20 DEG	SECTION G-G, SHEET 5
N5	OFF-SPEC FROM LAG TANK, (CFF-2"-SN-111-P5)	2" SCHED 80S	BW	TOP	100 DEG	SECTION H-H, SHEET 5
N6	LEVEL ELEMENT, (LE-108A)	3" SCHED 40S	BW	TOP	65 DEG	SECTION K-K, SHEET 5
N7	CHEMICAL ADDITION, (CFF-2"-CH-100-P4)	2" SCHED 80S	BW	TOP	150 DEG	SECTION M-M, SHEET 6
N8	TEMPERATURE ELEMENT, (TE--113)	1 1/4" SCHED 80S	BW	TOP	180 DEG	DETAIL F, SHEET 4
N9	SPARE, (CFF-3"-SL-119-P5)	3" SCHED 80S	BW	TOP	220 DEG	DETAIL D, SHEET 3
N10	SPARE, (CFF-3"-SL-120-P5)	3" SCHED 80S	BW	TOP	240 DEG	DETAIL D, SHEET 3
N11	VESSEL EXHAUST, (PVV-4"-AIR-1916-P5)	4" SCHED 80S	BW	TOP	270 DEG	SECTION V-V, SHEET 4
N12	INSPECTION PORT, (6" PORT)	6" SCHED 40S	BW	TOP	310 DEG	SECTION N-N, SHEET 6
N13	TREATED WASTE DELAY TANK, (CFF-1 1/2"-SN-323-P5)	1 1/2" SCHED 80S	BW	TOP	330 DEG	DETAIL D, SHEET 3
N14	OVERFLOW, (ECS-6"-SL-180-P5)	6" SCHED 80S	BW	SIDE	45 DEG	SECTION J-J, SHEET 5
N15	FEED FROM AP-107, (CFF-2"-SN-001-P5)	2" SCHED 80S	BW	TOP	120 DEG	DETAIL C, SHEET 3
N16	CHILLED WATER RETURN, (UT-2"-CHW-517-P5)	2" SCHED 40S	BW	SIDE	135 DEG	SECTION, L-L SHEET 5
N17	CHILLED WATER RETURN, (UT-2"-CHW-519-P6)	2" SCHED 40S	BW	SIDE	135 DEG	SECTION, L-L SHEET 5
N18	CHILLED WATER SUPPLY, (UT-2"-CHW-566-P6)	2" SCHED 40S	BW	SIDE	315 DEG	SECTION P-P, SHEET 6
N19	LEVEL ELEMENT, (LE-108B)	3" SCHED 40S	BW	TOP	245 DEG	SECTION T-T, SHEET 6
N20	VESSEL VENT, (3" PORT)	3" SCHED 40S	BW	TOP	90 DEG	SECTION V-V, SHEET 4
N21	H2 MONITOR, (PVV-1"-AIR-666-P5)	1" SCHED 40S	BW	TOP	45 DEG	SECTION J-J, SHEET 5

GENERAL NOTES:

1. DIMENSIONS AND TOLERANCES ARE IN ACCORDANCE WITH ASME Y14.5M-1994.
2. APPROXIMATE WEIGHT OF ASSEMBLY IS: EMPTY 19,408 LBS / FULL 79,408 LBS.
3. DESIGN AND FABRICATION SHALL BE IN ACCORDANCE WITH CROSS FLOW FILTER SYSTEM PROCUREMENT SPECIFICATION 15-2-001 AND DATA SHEET 202LP-FFA-CFF-TK-100.
4. ALL MATERIAL SIZE AND THICKNESS SHOWN ARE REFERENCE ONLY. ACTUAL SIZE AND THICKNESS TO BE DETERMINED DURING DESIGN.
5. MINIMUM VESSEL WALL THICKNESS 3/4"
6. NO BOLTED CONNECTS ALLOWED INSIDE OF TANK.
7. SCHEDULE 80S NOZZLES SHALL HAVE END OF NOZZLE PREPARED FOR WELDING TO SCHEDULE 40S PIPING.
8. FOR SAFETY DESIGN REQUIREMENTS SEE DATA SHEET 202LP-FFA-CFF-TK-100.
9. LABEL VESSEL IN ACCORDANCE WITH SPECIFICATION 15-2-001.

UNLESS OTHERWISE SPECIFIED
ALL DIMENSIONS ARE IN INCHES.
REMOVE BURRS & SHARP EDGES.
THIRD ANGLE PROJECTION
TOLERANCES
.X = ±.1
.XX = ±.01
.XXX = ±.005
X/XX = ±1/16
ANGLE = ±.5 DEG
MACHINED SURFACES 125
MACHINED INSIDE
RADII = .04 ±.02

REVISION APPROVAL RECORD				REV 0	
DISCIPLINE	BY	DATE	DISCIPLINE	BY	DATE
ARCH.	SF	9/19/16	MECHANICAL	DS	9/19/16
BUILDING SERVICES	N/A	N/A	PIPING	MJ	9/19/16
CIVIL	SF	9/19/16	PROCESS	MW	9/19/16
ELECTRICAL	CF	9/19/16	QA / QC	PB	9/19/16
ENVIRON.	N/A	N/A	STRUCTURAL	SF	9/19/16
GEN. ARRANG.	DJ	9/19/16			
I & C	HF	9/19/16			
HVAC	WL	9/19/16			

DRAWING STATUS				
ISSUED	REV	DATE	SDE	PEM
APPROVED FOR BID	0	9/19/16	DS	BGA

NOT APPROVED FOR CONSTRUCTION UNLESS SIGNED AND DATED. DESTROY ALL PRINTS BEARING EARLIER DATE AND/OR REV.NO.

AECOM
URS ENERGY & CONSTRUCTION Inc. - an AECOM Company
ATKINS
AREVA
AECOM PROJECT NO.: 31299

DWG NUMBER	TITLE	REF NUMBER	TITLE
	DRAWING TRACEABILITY LIST	NEXT USED ON	REFERENCES H-16-001275-01

APROVED FOR BID
NOT FOR CONSTRUCTION

REV	DESCRIPTION	ORG	CHK	APVD	IDV	DATE
0	APPROVED FOR BID	RC	DJ	DS	N/A	9/19/16

REVISIONS

BLDG. NO. 202LP
INDEX NO. 2502

CAUTION
NOT COMPLETE WITHOUT CURRENT CHANGE DOCUMENTS FROM DATABASE

ATTENTION
DESTROY THIS DOCUMENT BY SHREDDING MAY CONTAIN SENSITIVE INFORMATION

NAME	DATE	COMPANY
DRAWN BY		
DRAFTING APPROVAL		
DISCIPLINE ENGINEER		
ENGINEER		

U.S. DEPARTMENT OF ENERGY
Office of River Protection
LAWPS
FILTER TANK VAULT CFF-V-01
TANK CFF-TK-100 DPD

SIZE F | DRAWING NUMBER H-16-001280 | SHEET 1 | REV 0
SCALE NOTED
PLOTTED

DRAWING

H-16-001280-2

FILTER TANK VAULT CFF-V-01 TANK CFF-TK-100 DPD

NOTES:

FOR GENERAL NOTES AND NOZZLE SCHEDULE SEE SHEET 1.

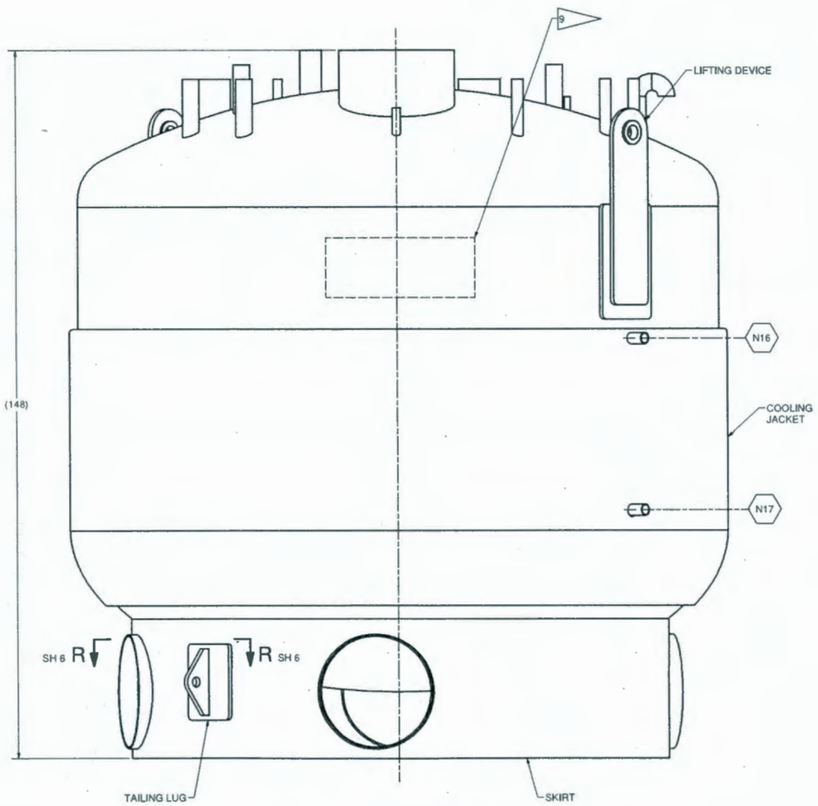

VIEW A-A
SCALE 1/12
SHEET 1

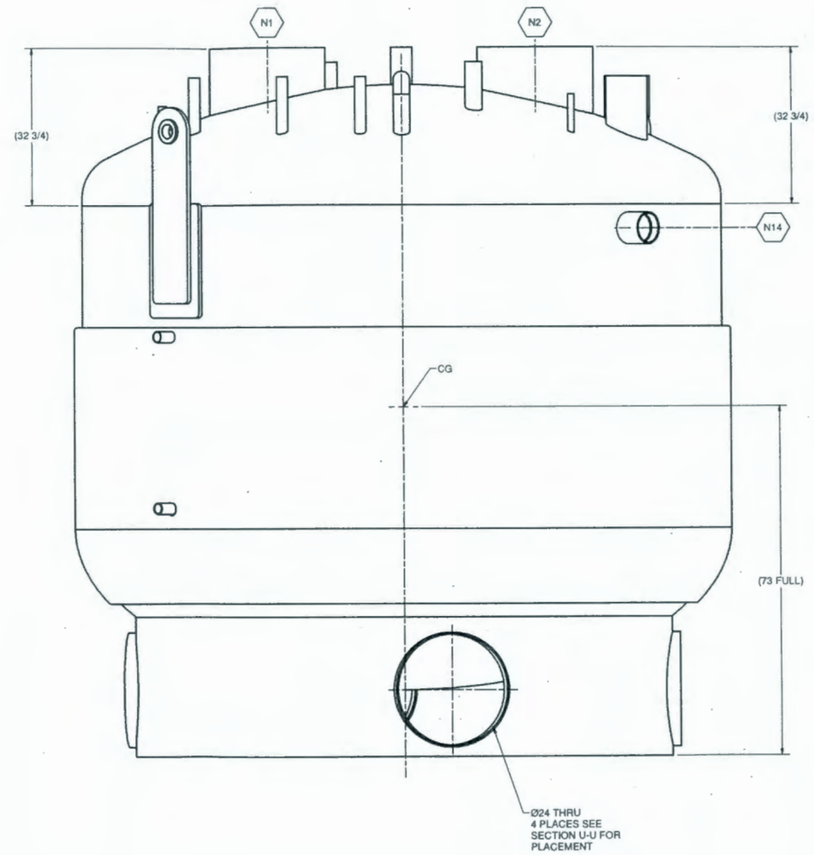

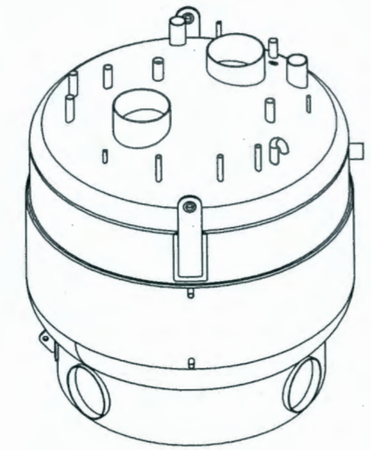

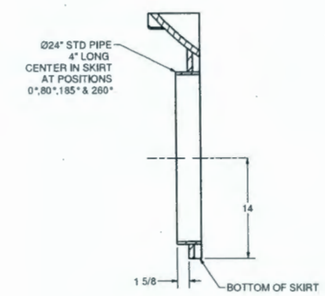

SECTION U-U
SCALE 1/8
SHEET 1

UNLESS OTHERWISE SPECIFIED

ALL DIMENSIONS ARE IN INCHES.
REMOVE BURRS & SHARP EDGES.

THIRD ANGLE PROJECTION

TOLERANCES
.X = ±.1
.XX = ±.01
.XXX = ±.005
X/XX = ±1/16
ANGLE = ±.5 DEG
MACHINED SURFACES 125
MACHINED INSIDE
RADII = .04 ±.02

REVISION APPROVAL RECORD				REV 0	
DISCIPLINE	BY	DATE	DISCIPLINE	BY	DATE
ARCH.	SF	9/19/16	MECHANICAL	DS	9/19/16
BUILDING SERVICES	N/A	N/A	PIPING	MJ	9/19/16
CIVIL	SF	9/19/16	PROCESS	MW	9/19/16
ELECTRICAL	CF	9/19/16	QA / QC	PB	9/19/16
ENVIRON.	N/A	N/A	STRUCTURAL	SF	9/19/16
GEN. ARRANG.	DJ	9/19/16			
I & C	HF	9/19/16			
HVAC	WL	9/19/16			

DRAWING STATUS				
ISSUED	REV	DATE	SDE	PEM
APPROVED FOR BID	0	9/19/16	DS	BGA

NOT APPROVED FOR CONSTRUCTION UNLESS SIGNED AND DATED. DESTROY ALL PRINTS BEARING EARLIER DATE AND/OR REV.NO.

AECOM
URS ENERGY & CONSTRUCTION Inc. - an AECOM Company
ATKINS
AREVA

AECOM PROJECT NO.: 31269

DWG NUMBER	TITLE
	DRAWING TRACEABILITY LIST

REF NUMBER	TITLE
	REFERENCES
NEXT USED ON	SHEET 1

APROVED FOR BID
NOT FOR CONSTRUCTION

REV	DESCRIPTION	ORG	CHK	APVD	IDV	DATE
0	APPROVED FOR BID	RC	DJ	DS	N/A	9/19/16

REVISIONS

BLDG. NO. 202LP

INDEX NO. 2502

CAUTION
NOT COMPLETE WITHOUT CURRENT CHANGE DOCUMENTS FROM DATABASE

ATTENTION
DESTROY THIS DOCUMENT BY SHREDDING MAY CONTAIN SENSITIVE INFORMATION

NAME	DATE	COMPANY
DRAWN BY		
DRAW PKG APPROVAL		
DISCIPLINE ENGINEER		
ENGINEER		

U.S. DEPARTMENT OF ENERGY
Office of River Protection

LAWPS
FILTER TANK VAULT CFF-V-01
TANK CFF-TK-100 DPD

SIZE	DRAWING NUMBER	SHEET	REV
F	H-16-001280	2	0

SCALE NOTED

DOE_18_7 DWR NOV 27 B

DRAWING

H-16-001280-3

FILTER TANK VAULT CFF-V-01 TANK CFF-TK-100 DPD

NOTES:

FOR GENERAL NOTES AND NOZZLE SCHEDULE SEE SHEET 1.

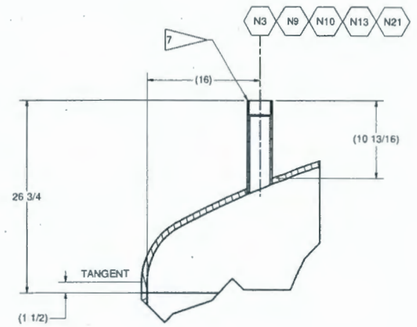

SECTION D-D

SCALE 1/8
TYPICAL DETAIL
SHEET 1

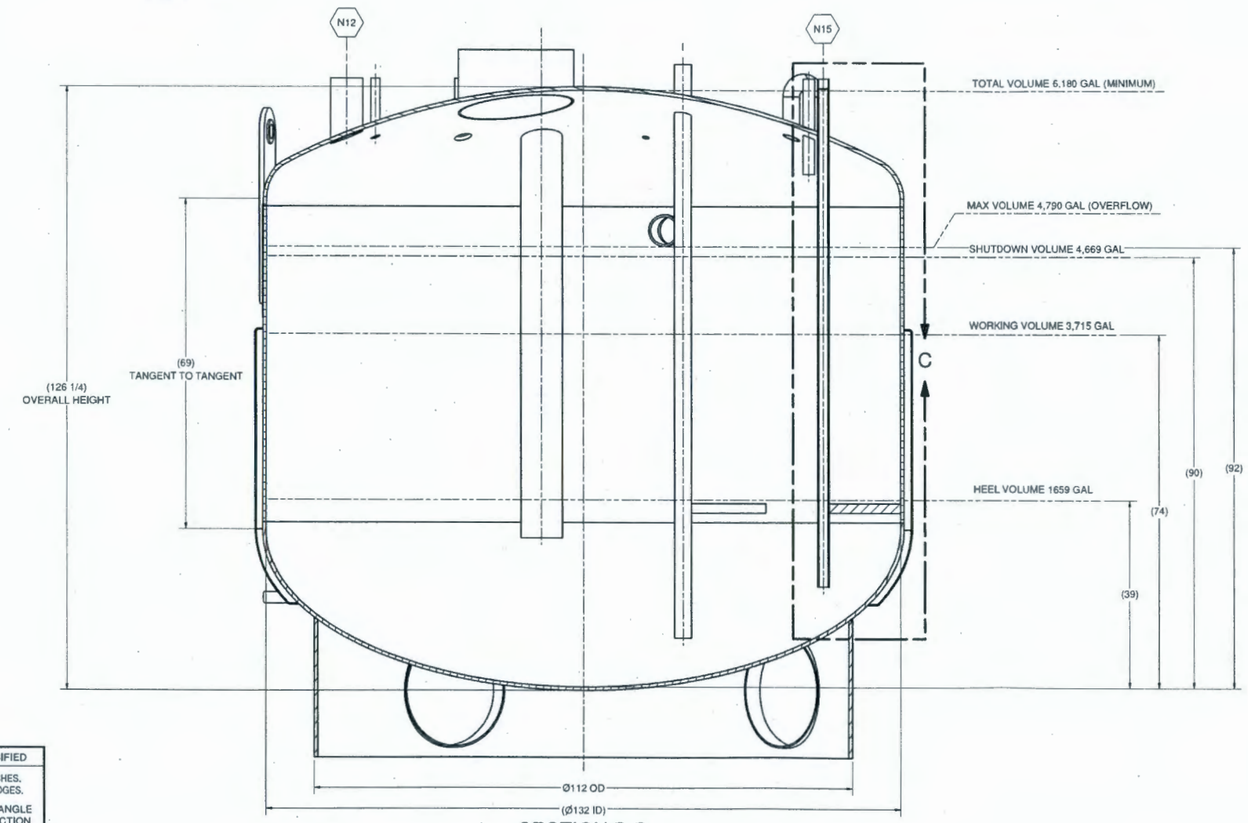

SECTION B-B

SCALE 1/12
SHEET 1

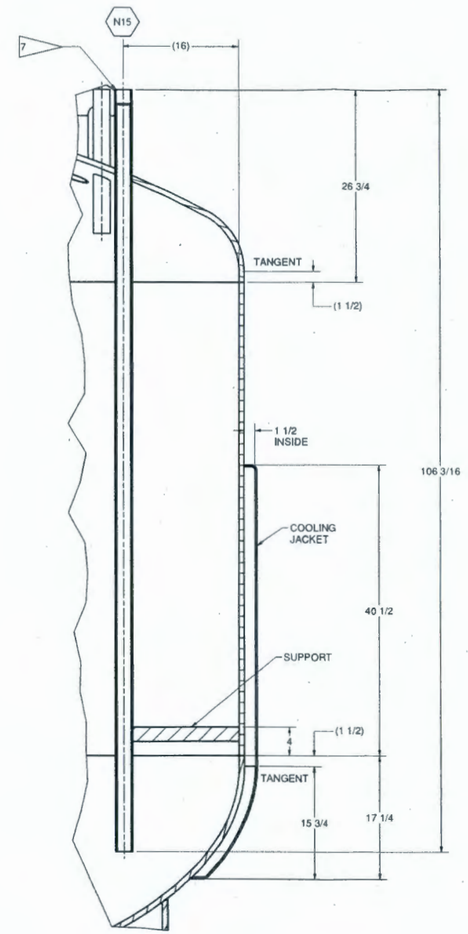

DETAIL C

SCALE 1/8

UNLESS OTHERWISE SPECIFIED

ALL DIMENSIONS ARE IN INCHES.
REMOVE BURRS & SHARP EDGES.

THIRD ANGLE PROJECTION

TOLERANCES
.X = ±.1
.XX = ±.01
.XXX = ±.005
X/XX = ±1/16
ANGLE = ±.5 DEG
MACHINED SURFACES 125
MACHINED INSIDE
RADII = .04 ±.02

REVISION APPROVAL RECORD				REV 0	
DISCIPLINE	BY	DATE	DISCIPLINE	BY	DATE
ARCH.	SF	9/19/16	MECHANICAL	DS	9/19/16
BUILDING SERVICES	N/A	N/A	PIPING	MJ	9/19/16
CIVIL	SF	9/19/16	PROCESS	MW	9/19/16
ELECTRICAL	CF	9/19/16	QA / QC	PB	9/19/16
ENVIRON.	N/A	N/A	STRUCTURAL	SF	9/19/16
GEN. ARRANG.	DJ	9/19/16			
I & C	HF	9/19/16			
HVAC	WL	9/19/16			

DRAWING STATUS				
ISSUED	REV	DATE	SDE	PEM
APPROVED FOR BID	0	9/19/16	DS	BGA

NOT APPROVED FOR CONSTRUCTION UNLESS SIGNED AND DATED. DESTROY ALL PRINTS BEARING EARLIER DATE AND/OR REV.NO.

AECOM
URS ENERGY & CONSTRUCTION Inc. - an AECOM Company
ATKINS
AREVA

AECOM PROJECT NO.: 31269

DWG NUMBER	TITLE
DRAWING TRACEABILITY LIST	

REF NUMBER	TITLE
NEXT USED ON SHEET 1	REFERENCES

APROVED FOR BID
NOT FOR CONSTRUCTION

REV	DESCRIPTION	ORG	CHK	APVD	IDV	DATE
0	APPROVED FOR BID	RC	DJ	DS	N/A	9/19/16

REVISIONS

BLDG. NO. 202LP

INDEX NO. 2502

CAUTION
NOT COMPLETE WITHOUT CURRENT CHANGE DOCUMENTS FROM DATABASE

ATTENTION
DESTROY THIS DOCUMENT BY SHREDDING
MAY CONTAIN SENSITIVE INFORMATION

NAME	DATE	COMPANY
DRAWN BY		
CHIEF TECH APPROVAL		
DESIGN ENGINEER		
CHECKER		

U.S. DEPARTMENT OF ENERGY
Office of River Protection

LAWPS
FILTER TANK VAULT CFF-V-01
TANK CFF-TK-100 DPD

SIZE F | DRAWING NUMBER H-16-001280 | SHEET 3 | REV 0

SCALE NOTED

DRAWING

H-16-001280-4

FILTER TANK VAULT CFF-V-01 TANK CFF-TK-100 DPD

NOTES:

FOR GENERAL NOTES AND NOZZLE SCHEDULE SEE SHEET 1.

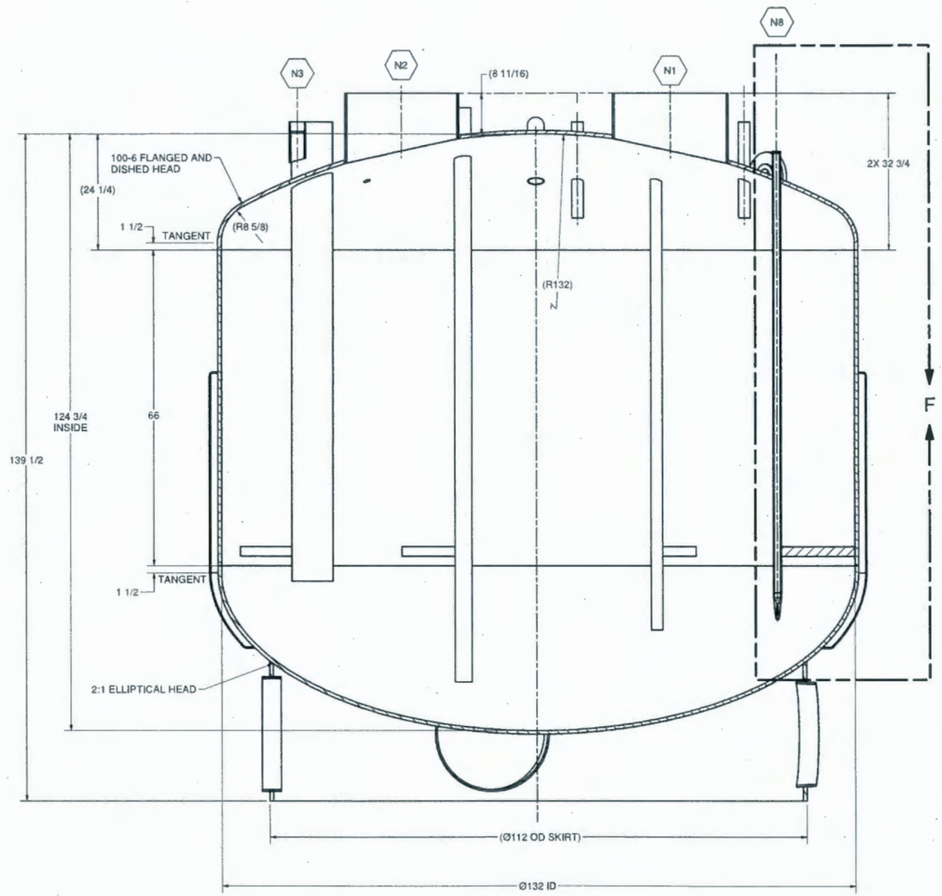

SECTION E-E
SCALE 1/12
SHEET 1

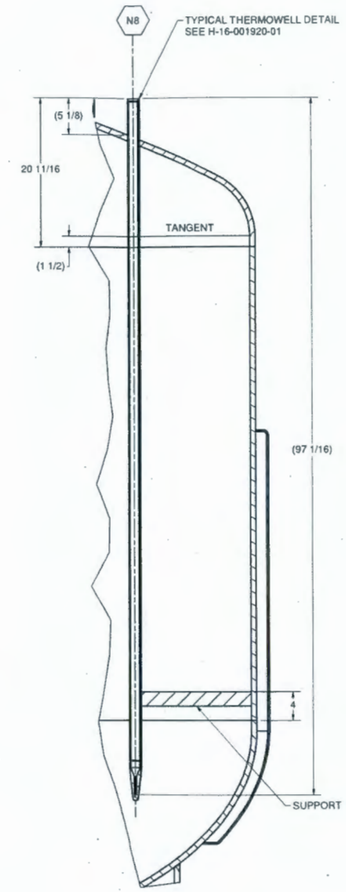

DETAIL F
SCALE 1/8

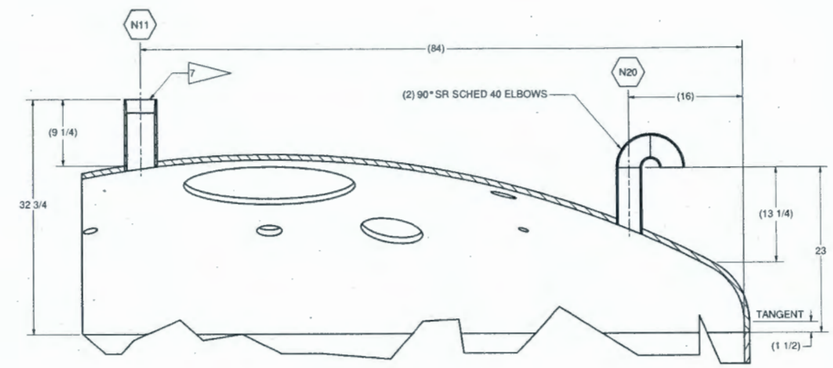

SECTION V-V
SCALE 1/8
SHEET 1
BACKGROUND OBJECTS REMOVED FOR CLARITY

UNLESS OTHERWISE SPECIFIED

ALL DIMENSIONS ARE IN INCHES.
REMOVE BURRS & SHARP EDGES.

THIRD ANGLE PROJECTION

TOLERANCES
.X = ±.1
.XX = ±.01
.XXX = ±.005
X/XX = ±1/16
ANGLE = ±.5 DEG
MACHINED SURFACES 125
MACHINED INSIDE
RADII = .04 ±.02

REVISION APPROVAL RECORD				REV 0	
DISCIPLINE	BY	DATE	DISCIPLINE	BY	DATE
ARCH.	SF	9/19/16	MECHANICAL	DS	9/19/16
BUILDING SERVICES	N/A	N/A	PIPING	MJ	9/19/16
CIVIL	SF	9/19/16	PROCESS	MW	9/19/16
ELECTRICAL	CF	9/19/16	QA / QC	PB	9/19/16
ENVIRON.	N/A	N/A	STRUCTURAL	SF	9/19/16
GEN. ARRANG.	DJ	9/19/16			
I & C	HF	9/19/16			
HVAC	WL	9/19/16			

DRAWING STATUS				
ISSUED	REV	DATE	SDE	PEM
APPROVED FOR BID	0	9/19/16	DS	BGA

NOT APPROVED FOR CONSTRUCTION UNLESS SIGNED AND DATED. DESTROY ALL PRINTS BEARING EARLIER DATE AND/OR REV.NO.

AECOM
URS ENERGY & CONSTRUCTION Inc. - an AECOM Company
ATKINS
AREVA

AECOM PROJECT NO.: 31269

DWG NUMBER	TITLE	REF NUMBER	TITLE
DRAWING TRACEABILITY LIST		REFERENCES	
		NEXT USED ON	SHEET 1

APROVED FOR BID
NOT FOR CONSTRUCTION

REV	DESCRIPTION	ORG	CHK	APVD	IDV	DATE
0	APPROVED FOR BID	RC	DJ	DS	N/A	9/19/16

REVISIONS

BLDG. NO. 202LP

INDEX NO. 2502

CAUTION
NOT COMPLETE WITHOUT CURRENT CHANGE DOCUMENTS FROM DATABASE

ATTENTION
DESTROY THIS DOCUMENT BY SHREDDING MAY CONTAIN SENSITIVE INFORMATION

NAME	DATE	COMPANY
DRAWN BY		
DRW. REL APPROVAL		
DISCIPLINE ENGINEER		
ENGINEER		

U.S. DEPARTMENT OF ENERGY
Office of River Protection

LAWPS
FILTER TANK VAULT CFF-V-01
TANK CFF-TK-100 DPD

SIZE	DRAWING NUMBER	SHEET	REV
F	H-16-001280	4	0

SCALE NOTED

DRAWING

H-16-001280-5

FILTER TANK VAULT CFF-V-01 TANK CFF-TK-100 DPD

NOTES:

FOR GENERAL NOTES AND NOZZLE SCHEDULE SEE SHEET 1.

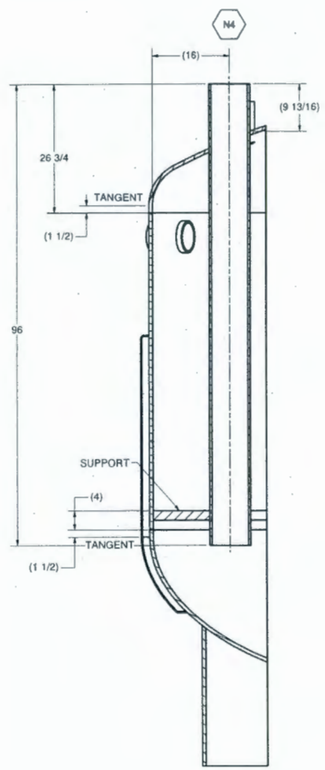

SECTION G-G
SCALE 1/12
SHEET 1

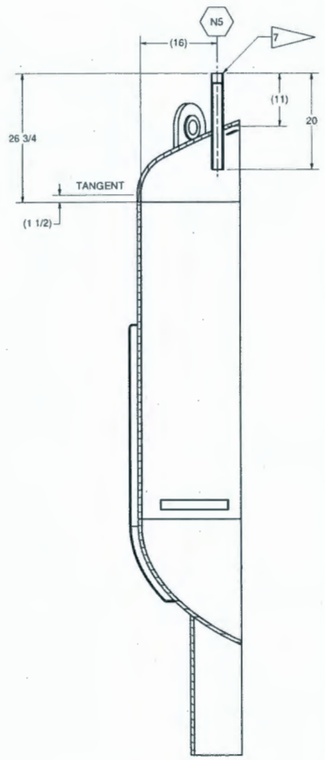

SECTION H-H
SCALE 1/12
SHEET 1

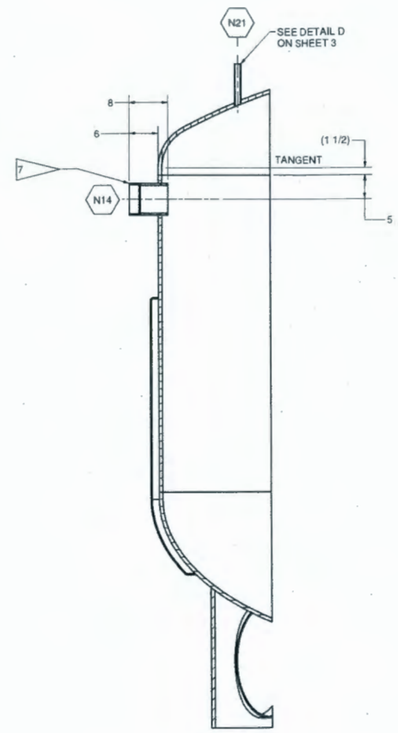

SECTION J-J
SCALE 1/12
SHEET 1

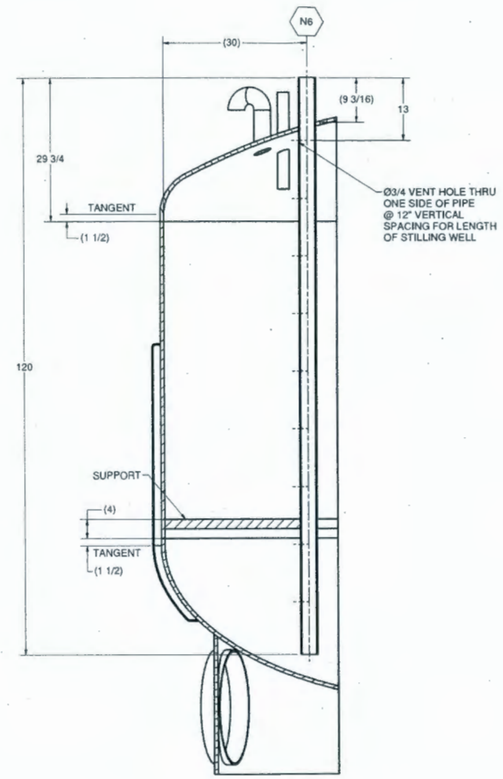

SECTION K-K
SCALE 1/12
SHEET 1

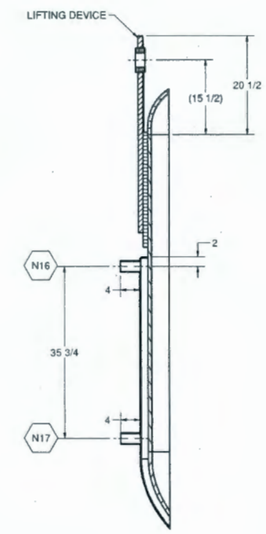

SECTION L-L
SCALE 1/12
SHEET 1

UNLESS OTHERWISE SPECIFIED

ALL DIMENSIONS ARE IN INCHES.
REMOVE BURRS & SHARP EDGES.

THIRD ANGLE PROJECTION

TOLERANCES
.X = ±.1
.XX = ±.01
.XXX = ±.005
X/XX = ± 1/16
ANGLE = ±.5 DEG
MACHINED SURFACES 125
MACHINED INSIDE
RADII = .04 ±.02

REVISION APPROVAL RECORD					REV 0
DISCIPLINE	BY	DATE	DISCIPLINE	BY	DATE
ARCH.	SF	9/19/16	MECHANICAL	DS	9/19/16
BUILDING SERVICES	N/A	N/A	PIPING	MJ	9/19/16
CIVIL	SF	9/19/16	PROCESS	MW	9/19/16
ELECTRICAL	CF	9/19/16	QA / QC	PB	9/19/16
ENVIRON.	N/A	N/A	STRUCTURAL	SF	9/19/16
GEN. ARRANG.	DJ	9/19/16			
I & C	HF	9/19/16			
HVAC	WI	9/19/16			

DRAWING STATUS				
ISSUED	REV	DATE	SDE	PEM
APPROVED FOR BID	0	9/19/16	DS	BGA

NOT APPROVED FOR CONSTRUCTION UNLESS SIGNED AND DATED. DESTROY ALL PRINTS BEARING EARLIER DATE AND/OR REV.NO.

AECOM
URS ENERGY & CONSTRUCTION Inc. - an AECOM Company
ATKINS
AREVA

AECOM PROJECT NO.: 31269

DWG NUMBER	TITLE
	DRAWING TRACEABILITY LIST

REF NUMBER	TITLE
	REFERENCES
NEXT USED ON	SHEET 1

APROVED FOR BID
NOT FOR CONSTRUCTION

REV	DESCRIPTION	ORG	CHK	APVD	IDV	DATE
0	APPROVED FOR BID	RC	DJ	DS	N/A	9/19/16

REV NO. | DESCRIPTION
REVISIONS

BLDG. NO. 202LP
WORK O.D. 2502

CAUTION
NOT COMPLETE WITHOUT CURRENT CHANGE DOCUMENTS FROM DATABASE

ATTENTION
DESTROY THIS DOCUMENT BY SHREDDING MAY CONTAIN SENSITIVE INFORMATION

NAME	DATE	COMPANY
DRAWN BY		
SKETCH APPROVAL		
DISCIPLINE ENGINEER		
ENGINEER		

U.S. DEPARTMENT OF ENERGY
Office of River Protection

LAWPS
FILTER TANK VAULT CFF-V-01
TANK CFF-TK-100 DPD

DEV	DRAWING NUMBER	SHEET	REV
F	H-16-001280	5	0

SCALE NOTED

DRAWING

H-16-001280-6

FILTER TANK VAULT CFF-V-01 TANK CFF-TK-100 DPD

NOTES:

FOR GENERAL NOTES AND NOZZLE SCHEDULE SEE SHEET 1.

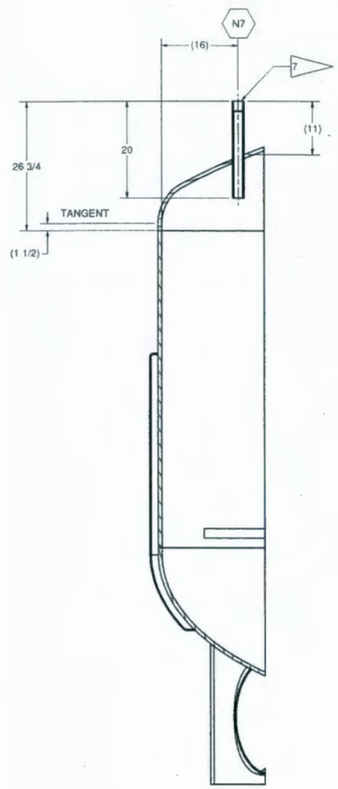

SECTION M-M
SCALE 1/12
SHEET 1

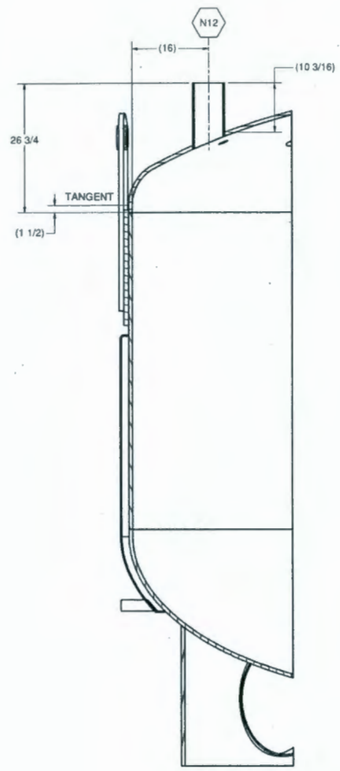

SECTION N-N
SCALE 1/12
SHEET 1
BACKGROUND OBJECTS
REMOVED FOR CLARITY

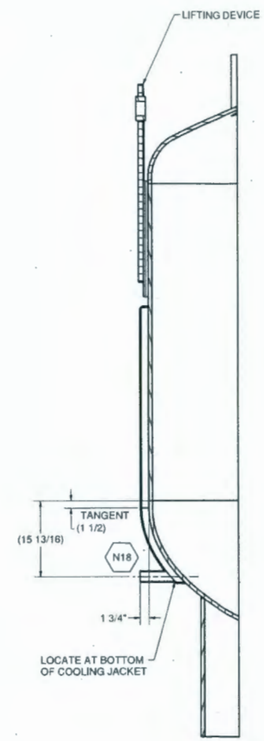

SECTION P-P
SCALE 1/12
SHEET 1

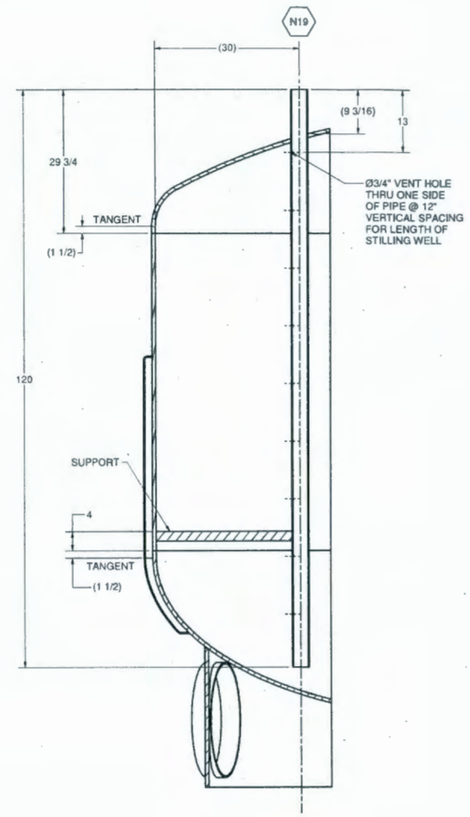

SECTION T-T
SCALE 1/12
SHEET 1
BACKGROUND OBJECTS
REMOVED FOR CLARITY

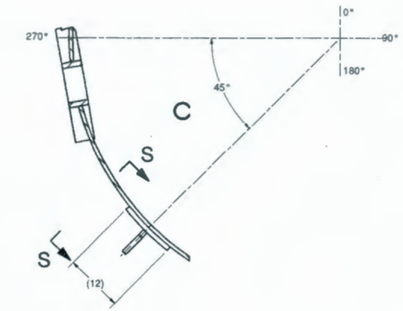

SECTION R-R
SCALE 1/12
SHEET 2

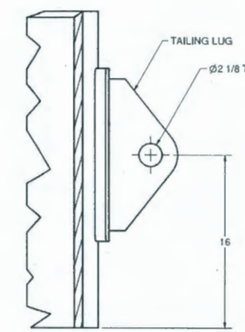

SECTION S-S
SCALE 3/16

UNLESS OTHERWISE SPECIFIED

ALL DIMENSIONS ARE IN INCHES.
REMOVE BURRS & SHARP EDGES.

THIRD ANGLE PROJECTION

TOLERANCES
.X = ±.1
.XX = ±.01
.XXX = ±.005
X/XX = ± 1/16
ANGLE = ± .5 DEG
MACHINED SURFACES 125
MACHINED INSIDE
RADII = .04 ±.02

REVISION APPROVAL RECORD				REV 0	
DISCIPLINE	BY	DATE	DISCIPLINE	BY	DATE
ARCH.	SF	9/19/16	MECHANICAL	DS	9/19/16
BUILDING SERVICES	N/A	N/A	PIPING	MJ	9/19/16
CIVIL	SF	9/19/16	PROCESS	MW	9/19/16
ELECTRICAL	CF	9/19/16	QA / QC	PB	9/19/16
ENVIRON.	N/A	N/A	STRUCTURAL	SF	9/19/16
GEN. ARRANG.	DJ	9/19/16			
I & C	HF	9/19/16			
HVAC	WL	9/19/16			

DRAWING STATUS				
ISSUED	REV	DATE	SDE	PEM
APPROVED FOR BID	0	9/19/16	DS	BGA

NOT APPROVED FOR CONSTRUCTION UNLESS SIGNED AND DATED. DESTROY ALL PRINTS BEARING EARLIER DATE AND/OR REV.NO.

AECOM
URS ENERGY & CONSTRUCTION Inc. - an AECOM Company
ATKINS
AREVA

AECOM PROJECT NO.: 31269

DWG NUMBER	TITLE
DRAWING TRACEABILITY LIST	

REF NUMBER	TITLE
REFERENCES	
NEXT USED ON	SHEET 1

APROVED FOR BID
NOT FOR CONSTRUCTION

REV	DESCRIPTION	ORG	CHK	APVD	IDV	DATE
0	APPROVED FOR BID	RC	DJ	DS	N/A	9/19/16

REVISIONS

BLDG. NO. 202LP

INDEX NO. 2502

CAUTION
NOT COMPLETE WITHOUT CURRENT CHANGE DOCUMENTS FROM DATABASE

ATTENTION
DESTROY THIS DOCUMENT BY SHREDDING
MAY CONTAIN SENSITIVE INFORMATION

NAME	DATE	COMPANY
DRAWN BY		
TRADE/SEC APPROVAL		
DISCIPLINE ENGINEER		
ENGINEERING CHECKER		
DESIGN AUTHORITY		

U.S. DEPARTMENT OF ENERGY
Office of River Protection

LAWPS
FILTER TANK VAULT CFF-V-01
TANK CFF-TK-100 DPD

SIZE F | DRAWING NUMBER H-16-001280 | SHEET 6 | REV 0

SCALE NOTED

DOE_TB_7.DWG 11/24/2016

DRAWING

H-16-001311-1

IX-P-02 IX PIT LEAD AND LAG COLUMN DPD

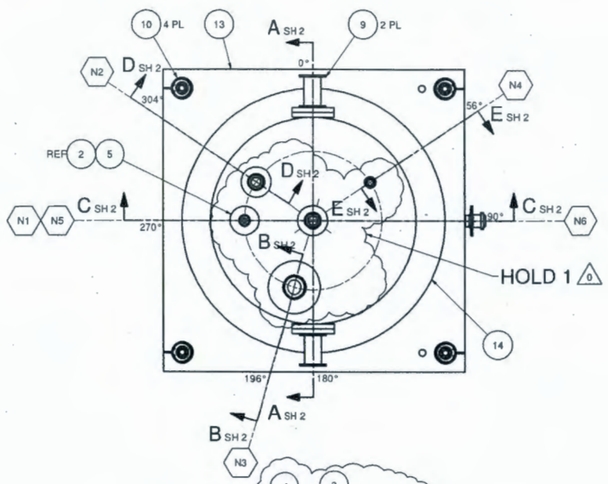

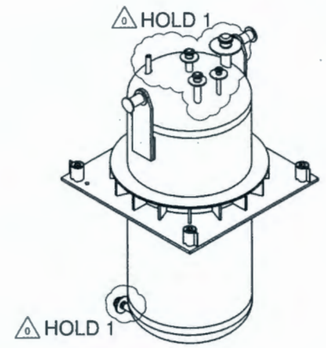

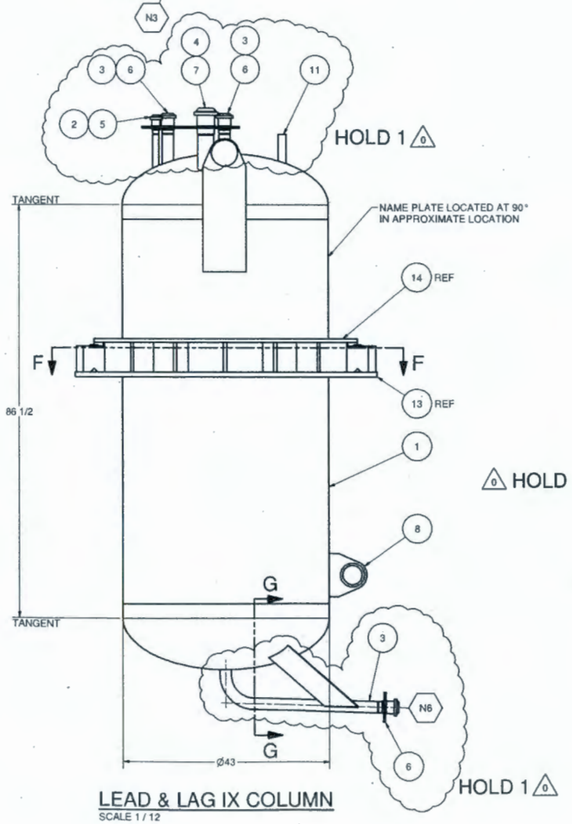

LEAD & LAG IX COLUMN
SCALE 1 / 12

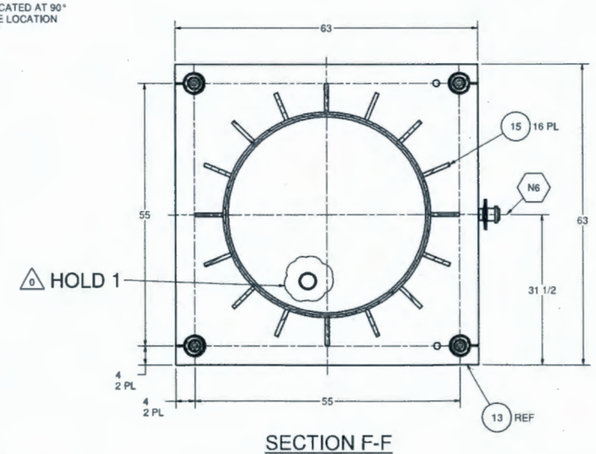

SECTION F-F
SCALE 1 / 12

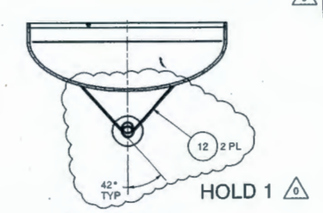

SECTION G-G
SCALE 1 / 12

PARTS/MATERIAL LIST

QL	QTY	PART/DRAWING NUMBER	NOMENCLATURE/DESCRIPTION	MATERIAL/REFERENCE	SH	ITEM
FQA	1	N/A	LEAD & LAG IX COLUMN VESSEL	ASTM A240 316/316L SST	1	1
FQA	AR	N/A	PIPE, 1 INCH SCHED 80S X AR LENGTH	ASTM A312 TP316/316 L SST	1	2
FQA	AR	N/A	PIPE 2 INCH SCHED 80S X AR LENGTH	ASTM A312 TP316/316 L SST	1	3
FQA	AR	N/A	PIPE 3 INCH SCHED 80S X AR LENGTH	ASTM A312 TP316/316 L SST	1	4
FQA	1	H-16-001926-01	1" PUREX KICKOFF ASSEMBLY	N/A	1	5
FQA	3	H-16-001925-01	2" PUREX KICKOFF ASSEMBLY	N/A	1	6
FQA	1	H-16-001927-01	3" PUREX KICKOFF ASSEMBLY	N/A	1	7
EQA	1	N/A	LAWPS IX COLUMN TAILING LUG	ASTM A240 304L SST	1	8
EQA	2	N/A	IX LEAD & LAG COLUMN LIFTING LUG	N/A	1	9
FQA	4	H-16-001924-01	REMOTE NUT SLEEVE ASSEMBLY	N/A	1	10
CM	1	H-16-001920-01	LAWPS TANK THERMOWELL TYPICAL DETAIL	N/A	1	11
FQA	2	N/A	PLATE, 1/4 THICK	ASTM A240 304L SST	1	12
FQA	1	N/A	PLATE, 1 INCH THK	ASTM A240 304L SST	1	13
FQA	1	N/A	PLATE, 3/4 THICK X 55 INCH DIA	ASTM A240 304L SST	1	14
FQA	16	N/A	PLATE, 3/4 THICK X 6 1/4 X 6	ASTM A240 304L SST	1	15

NOZZLE SCHEDULE

NOZZLE NO.	NOZZLE DESCRIPTION	NOZZLE SIZE	NOZZLE TYPE	NOZZLE LOCATION	NOZZLE ORIENTATION	DETAIL
N1	LEAD IX - FILTERED WASTE/REAGENTS LAG IX - FEED TO/FROM IX LEAD COLUMN	1" SCHED 80S	PUREX	TOP	270 DEG	SECTION C-C, SHEET 2
N2	FRESH RESIN/IX LEAD/LAG COLUMN VENT	2" SCHED 80S	PUREX	TOP	304 DEG	SECTION D-D, SHEET 2
N3	SPENT RESIN TO HIC	3" SCHED 80S	PUREX	TOP	196 DEG	SECTION B-B, SHEET 2
N4	THERMOWELL (TE-275/TE-219)	H-16-001920	BW	TOP	56 DEG	SECTION E-E, SHEET 2
N5	RECIRCULATION FLUID TO LEAD/LAG BREAK TANK	2" SCHED 80S	PUREX	TOP	TOP CENTER	SECTION C-C, SHEET 2
N6	FEED/ELUATE FROM IX COLUMN TREATED WASTE/ELUATE FROM IX COLUMN	2" SCHED 80S	PUREX	BOTTOM	90 DEG	SECTION C-C, SHEET 2

GENERAL NOTES:

1. DIMENSIONS AND TOLERANCES ARE IN ACCORDANCE WITH ASME Y14.5M-1994.
2. APPROXIMATE WEIGHT OF ASSEMBLY IS 3,700 LBS.
3. DESIGN AND FABRICATION SHALL BE IN ACCORDANCE WITH SPECIFICATION 15-2-003.
4. ALL MATERIAL SIZE AND THICKNESS SHOWN ARE REFERENCE ONLY. ACTUAL SIZE AND THICKNESS TO BE DETERMINED BY VENDOR DURING DETAILED DESIGN.
5. THIS DPD SET IS FOR THE LEAD AND LAG IX COLUMNS. ALL MATERIAL QUANTITIES CALLED OUT ARE FOR ONLY ONE IX COLUMN.

HOLD TABLE

HOLD NO.	DESCRIPTION	EXPECTED RLSE DATE
0 1	FINAL NOZZLE LOCATIONS WILL BE CONFIRMED BY BUYER FROM RESULTS OF FULL SCALE TESTING	

UNLESS OTHERWISE SPECIFIED
ALL DIMENSIONS ARE IN INCHES.
REMOVE BURRS & SHARP EDGES.
THIRD ANGLE PROJECTION
TOLERANCES
.X = ± .1
.XX = ± .01
.XXX = ± .005
X/XX = ± 1/16
ANGLE = ± .5 DEG
MACHINED SURFACES 125
MACHINED INSIDE
RADII = .04 ±.02

REVISION APPROVAL RECORD				REV 0	
DISCIPLINE	BY	DATE	DISCIPLINE	BY	DATE
ARCH.	SF	9/19/16	MECHANICAL	DS	9/19/16
BUILDING SERVICES	N/A	N/A	PIPING	MJ	9/19/16
CIVIL	SF	9/19/16	PROCESS	MW	9/19/16
ELECTRICAL	CF	9/19/16	QA / QC	PB	9/19/16
ENVIRON.	N/A	N/A	STRUCTURAL	SF	9/19/16
GEN. ARRANG.	DJ	9/19/16			
I & C	HF	9/19/16			
HVAC	WL	9/19/16			

DRAWING STATUS				
ISSUED	REV	DATE	SDE	PEM
APPROVED FOR BID	0	9/19/16	DS	BGA

NOT APPROVED FOR CONSTRUCTION UNLESS SIGNED AND DATED. DESTROY ALL PRINTS BEARING EARLIER DATE AND/OR REV.NO.

AECOM
URS ENERGY & CONSTRUCTION Inc. - an AECOM Company
ATKINS
AREVA

AECOM PROJECT NO.: 31259

DWG NUMBER	TITLE
DRAWING TRACEABILITY LIST	

REF NUMBER	TITLE
REFERENCES	
NEXT USED ON	H-16-001310

APROVED FOR BID
NOT FOR CONSTRUCTION

REV	DESCRIPTION	ORG	CHK	APVD	IDV	DATE
0	APPROVED FOR BID	KM	DJ	DS	DKC	9/19/16

REVISIONS

BLDG. NO. 202LP
INDEX NO. 2502

CAUTION
NOT COMPLETE WITHOUT CURRENT CHANGE DOCUMENTS FROM DATABASE

ATTENTION
DESTROY THIS DOCUMENT BY SHREDDING MAY CONTAIN SENSITIVE INFORMATION

	NAME	DATE	COMPANY
DRAWN BY			
DRAFTING APPROVAL			
DISCIPLINE ENGINEER			
ENGINEERING CHIEF/SET			
DESIGN AUTHORITY			

U.S. DEPARTMENT OF ENERGY
Office of River Protection

LAWPS
IX-P-02 IX PIT
LEAD & LAG COLUMN DPD

SIZE F | DRAWING NUMBER H-16-001311 | SHEET 1 | REV 0
SCALE NOTED
PLOT ID
DOC_TB_T-DWG INCH 20 B

DRAWING

H-16-001311-2

IX-P-02 IX PIT LEAD AND LAG COLUMN DPD

NOTES:

1. SEE SHEET 1 FOR GENERAL NOTES.

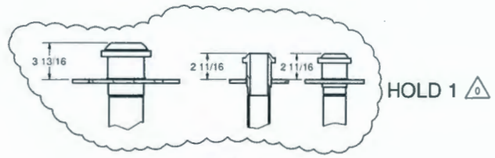

DETAIL H
SCALE 1 / 6

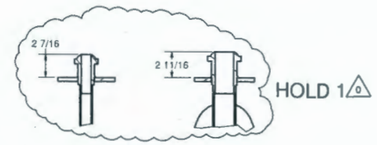

DETAIL K
SCALE 1 / 6

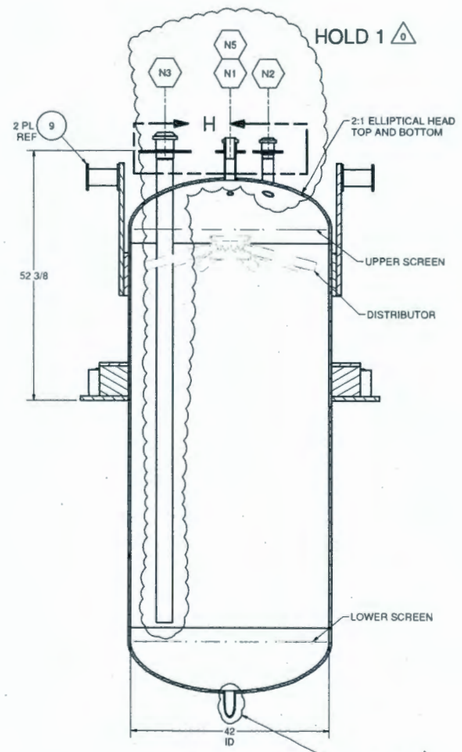

SECTION A-A
SCALE 1 / 12
SHEET 1

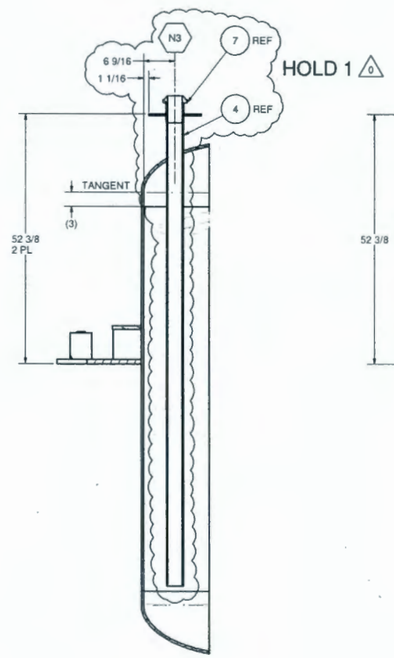

SECTION B-B
SCALE 1 / 12
SHEET 1

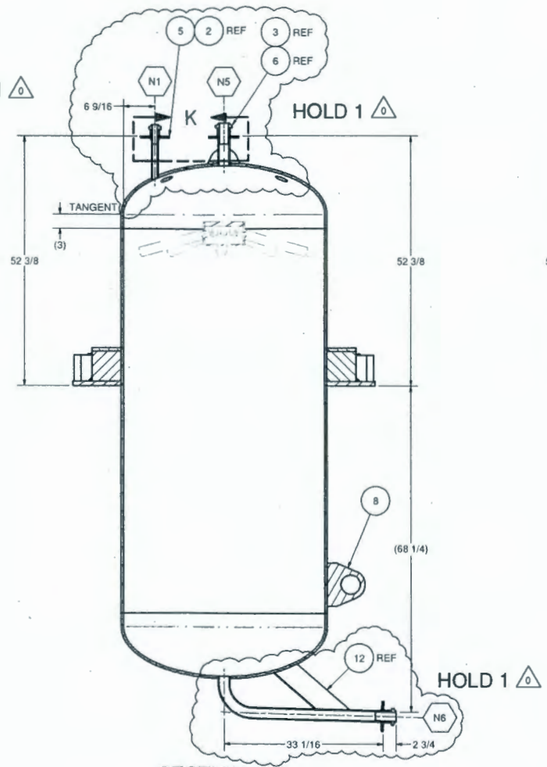

SECTION C-C
SCALE 1 / 12
SHEET 1

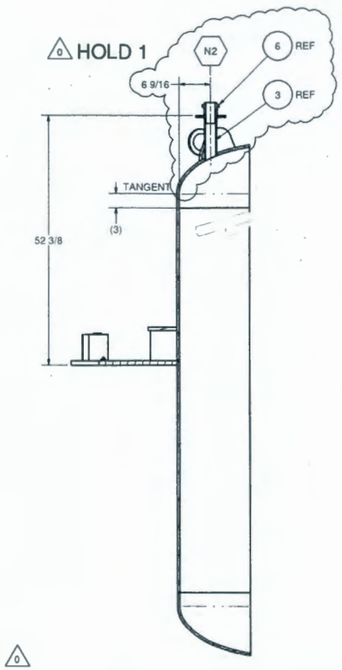

SECTION D-D
SCALE 1 / 12
SHEET 1

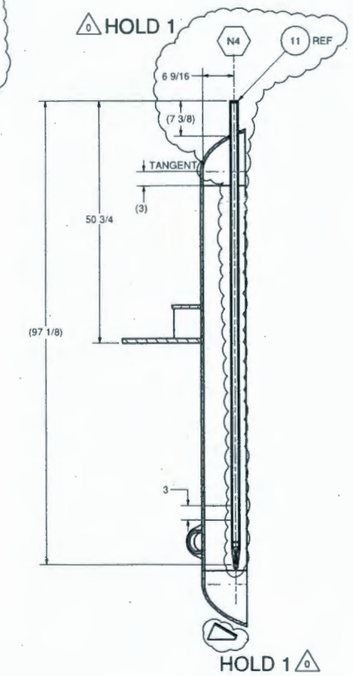

SECTION E-E
SCALE 1 / 12
SHEET 1

UNLESS OTHERWISE SPECIFIED

ALL DIMENSIONS ARE IN INCHES.
REMOVE BURRS & SHARP EDGES.

THIRD ANGLE PROJECTION

TOLERANCES
.X = ±.1
.XX = ±.01
.XXX = ±.005
X/XX = ±1/16
ANGLE = ±.5 DEG
MACHINED SURFACES 125
MACHINED INSIDE
RADII = .04 ±.02

REVISION APPROVAL RECORD					REV 0
DISCIPLINE	BY	DATE	DISCIPLINE	BY	DATE
ARCH.	SF	9/19/16	MECHANICAL	DS	9/19/16
BUILDING SERVICES	N/A	N/A	PIPING	MJ	9/19/16
CIVIL	SF	9/19/16	PROCESS	MW	9/19/16
ELECTRICAL	CF	9/19/16	QA / QC	PB	9/19/16
ENVIRON.	N/A	N/A	STRUCTURAL	SF	9/19/16
GEN. ARRANG.	DJ	9/19/16			
I & C	HF	9/19/16			
HVAC	WL	9/19/16			

DRAWING STATUS				
ISSUED	REV	DATE	SDE	PEM
APPROVED FOR BID	0	9/19/16	DS	BGA

NOT APPROVED FOR CONSTRUCTION UNLESS SIGNED AND DATED. DESTROY ALL PRINTS BEARING EARLIER DATE AND/OR REV.NO.

AECOM
URS ENERGY & CONSTRUCTION Inc. - an AECOM Company
ATKINS
AREVA

AECOM PROJECT NO.: 31269

DWG NUMBER	TITLE
DRAWING TRACEABILITY LIST	

REF NUMBER	TITLE
REFERENCES	
NEXT USED ON	SHEET 1

APROVED FOR BID
NOT FOR CONSTRUCTION

REV	DESCRIPTION	ORG	CHK	APVD	IDV	DATE
0	APPROVED FOR BID	KM	DJ	DS	DKC	9/19/16

REVISIONS

BLDG. NO. 202LP

INDEX NO. 2502

CAUTION
NOT COMPLETE WITHOUT CURRENT CHANGE DOCUMENTS FROM DATABASE

ATTENTION
DESTROY THIS DOCUMENT BY SHREDDING MAY CONTAIN SENSITIVE INFORMATION

NAME	DATE	COMPANY
DRAWN BY		
CHECKED APPROVAL		
DISCIPLINE ENGINEER		
ENGINEERING CHECKER		
CITIZEN AUTHORITY		

U.S. DEPARTMENT OF ENERGY
Office of River Protection

LAWPS
IX-P-02 IX PIT
LEAD & LAG COLUMN DPD

SIZE F | DRAWING NUMBER H-16-001311 | SHEET 2 | REV 0

SCALE NOTED

PLOTTED

DRAWING

H-16-001312

IX-P-02 IX Pit Lead and Lag Column DPD

PARTS/MATERIAL LIST

QL	QTY	PART/DRAWING NUMBER	NOMENCLATURE/DESCRIPTION	MATERIAL/REFERENCE	SH	ITEM
FQA	1	H-16-001311	LAWPS IX-P-02 IX PIT LEAD & LAG COLUMN DPD	N/A	N/A	1
FQA	1	N/A	PLATE, 1 INCH THICK	ASTM A240 304L SST	N/A	2
FQA	4	N/A	SUPPORT STUD, ROUND BAR, 1 1/4 DIA	NITRONIC 60	N/A	3
FQA	3	N/A	PLATE, 1 INCH THICK	ASTM A240 304L SST	N/A	4
FQA	1	N/A	LONG GUIDE PIN, RND BAR 1 1/4 DIA	ASTM A276 316L SST	N/A	5
FQA	1	N/A	SHORT GUIDE PIN, RND BAR 1 1/4 DIA	ASTM A276 316L SST	N/A	6

GENERAL NOTES:

1. DIMENSIONS AND TOLERANCES ARE IN ACCORDANCE WITH ASME Y14.5M-1994.
2. APPROXIMATE WEIGHT OF ASSEMBLY IS 4,000 LBS.
3. DESIGN AND FABRICATION SHALL BE IN ACCORDANCE WITH SPECIFICATION 15-2-003.
4. ALL MATERIAL SIZE AND THICKNESS SHOWN ARE REFERENCE ONLY. ACTUAL SIZE AND THICKNESS TO BE DETERMINED BY VENDOR DURING DETAILED DESIGN.
5. TEMPLATE MATCH DRILL FOR ALLIGNMENT OF GUIDE PINS AND RETAINING STUDS.
6. THIS DPD SET IS FOR THE LEAD AND LAG IX COLUMNS. ALL MATERIAL QUANTITIES CALLED OUT ARE FOR ONLY ONE IX COLUMN.

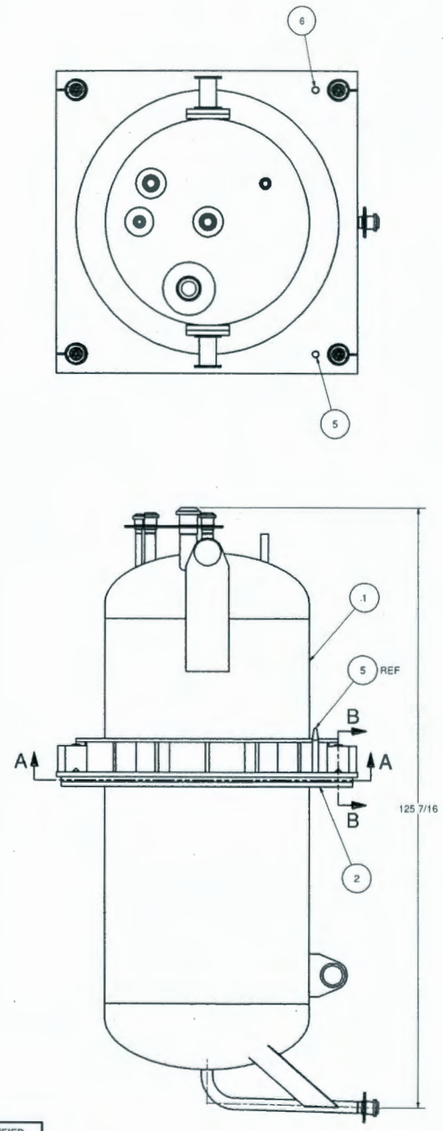

IX-IXC-200 & IX-IXC-201 DPD
SCALE 1 /12

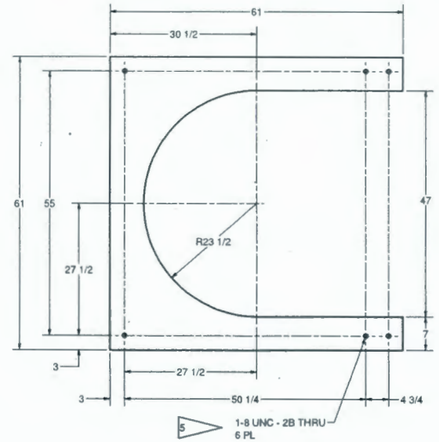

2 PLATE, 1 INCH
SCALE: 1/12

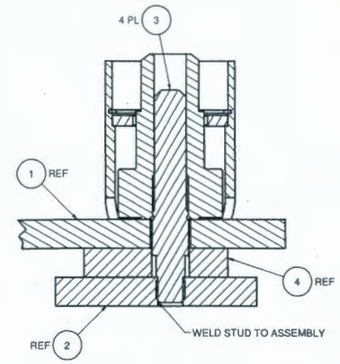

SECTION B-B
SCALE 1 /2

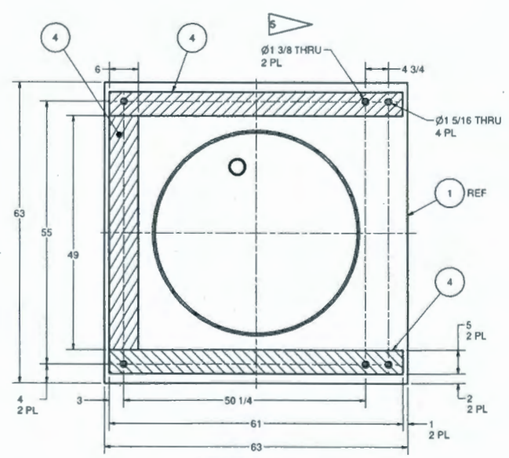

SECTION A-A
SCALE 1 /12

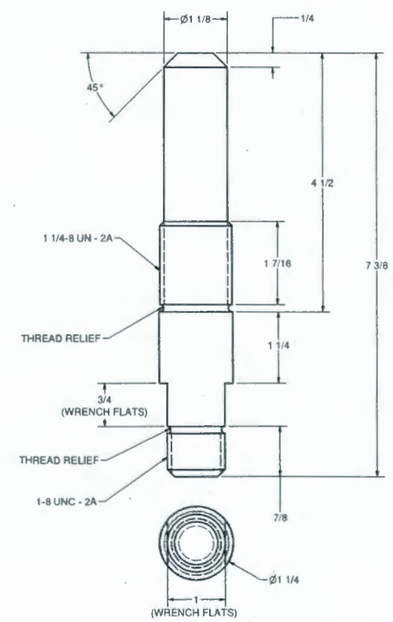

3 COLUMN RETAINING STUD
SCALE: 1/2

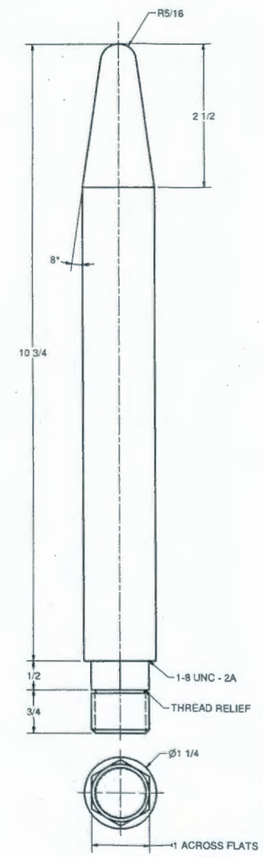

5 LONG GUIDE PIN
SCALE: 1/1

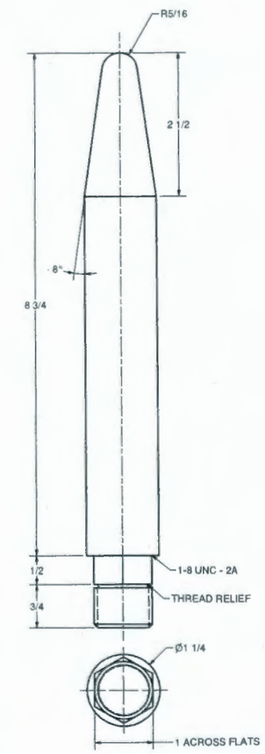

6 SHORT GUIDE PIN
SCALE: 1/1

UNLESS OTHERWISE SPECIFIED
ALL DIMENSIONS ARE IN INCHES.
REMOVE BURRS & SHARP EDGES.
THIRD ANGLE PROJECTION
TOLERANCES
.X = ±.1
.XX = ±.01
.XXX = ±.005
X/XX = ±1/16
ANGLE = ±.5 DEG
MACHINED SURFACES 125
MACHINED INSIDE
RADII = .04 ±.02

REVISION APPROVAL RECORD					REV 0
DISCIPLINE	BY	DATE	DISCIPLINE	BY	DATE
ARCH.	SF	9/19/16	MECHANICAL	DS	9/19/16
BUILDING SERVICES	N/A	N/A	PIPING	MJ	9/19/16
CIVIL	SF	9/19/16	PROCESS	MW	9/19/16
ELECTRICAL	CF	9/19/16	QA / QC	PB	9/19/16
ENVIRON.	N/A	N/A	STRUCTURAL	SF	9/19/16
GEN. ARRANG.	DJ	9/19/16			
I & C	HF	9/19/16			
HVAC	WL	9/19/16			

DRAWING STATUS				
ISSUED	REV	DATE	SDE	PEM
APPROVED FOR BID	0	9/19/16	DS	BGA

NOT APPROVED FOR CONSTRUCTION UNLESS SIGNED AND DATED. DESTROY ALL PRINTS BEARING EARLIER DATE AND/OR REV.NO.

AECOM
URS ENERGY & CONSTRUCTION Inc. - an AECOM Company
ATKINS
AREVA

AECOM PROJECT NO.: 31269

DWG NUMBER	TITLE
	DRAWING TRACEABILITY LIST

REF NUMBER	TITLE
	REFERENCES
NEXT USED ON	H-16-001311

APROVED FOR BID
NOT FOR CONSTRUCTION

REV	DESCRIPTION	ORG	CHK	APVD	IDV	DATE
0	APPROVED FOR BID	KM	DJ	DS	DKC	9/19/16

REVISIONS

BLDG. NO. 202LP
INDEX NO. 2502

CAUTION
NOT COMPLETE WITHOUT CURRENT CHANGE DOCUMENTS FROM DATABASE

ATTENTION
DESTROY THIS DOCUMENT BY SHREDDING MAY CONTAIN SENSITIVE INFORMATION

NAME	DATE	COMPANY
DRAWN BY		
CHECKED BY		
DISCIPLINE ENGINEER		
ENGINEERING MANAGER		
CS MANAGER		

U.S. DEPARTMENT OF ENERGY
Office of River Protection

LAWPS
IX-P-02 IX PIT
LEAD & LAG COLUMN DPD

SIZE F | DRAWING NUMBER H-16-001312 | SHEET 1 | REV 0
SCALE NOTED
PLOTTED

DRAWING

H-16-001900-1

LAWPS REMOTE VALVE SLEEVED ASSEMBLY DPD

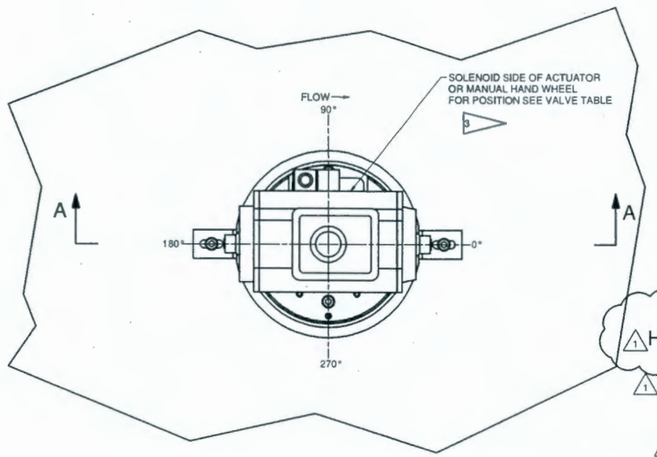

REMOTE VALVE SLEEVED ASSEMBLY

SCALE 1/4

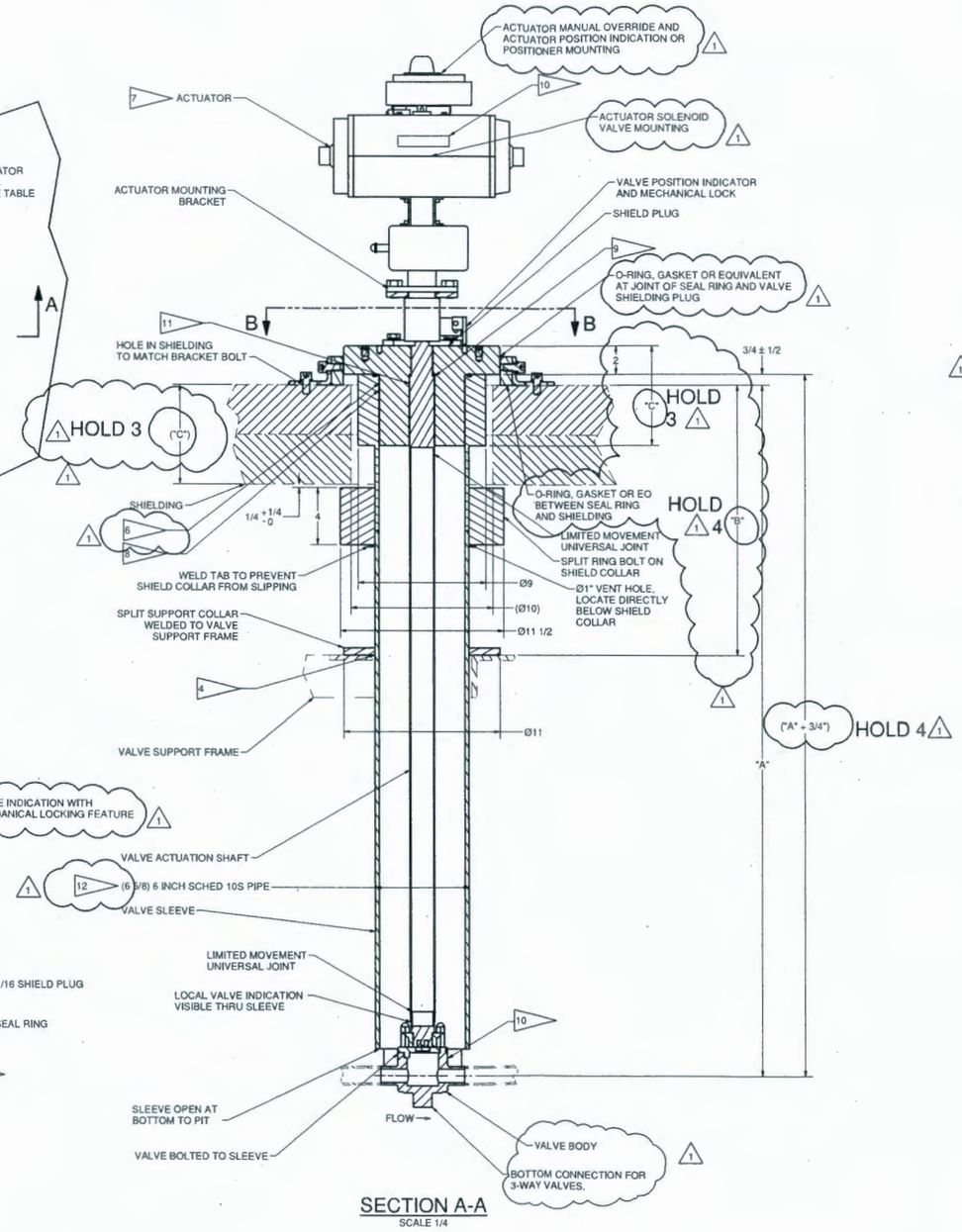

SECTION A-A

SCALE 1/4

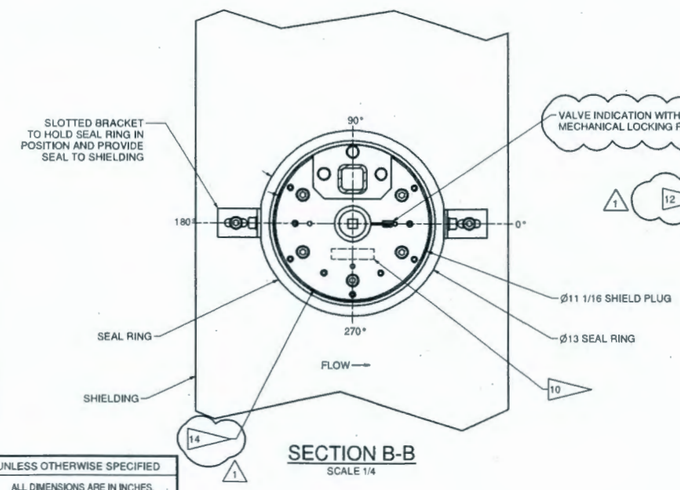

SECTION B-B

SCALE 1/4

GENERAL NOTES:

1. DIMENSIONS AND TOLERANCES ARE IN ACCORDANCE WITH ASME Y14.5M-1994.
2. (1) FABRICATE, INSPECT, AND TEST IN ACCORDANCE WITH SPECIALTY VALVE AND INSTRUMENT PROCUREMENT SPECIFICATION 15-2-022.
3. ACTUATOR ORIENTATION WILL BE VALVE DEPENDANT TO PREVENT INTERFERENCES WITH OTHER ACTUATORS AND SOLENOID VALVES.
4. SPLIT RING COLLAR TO BE SHIPPED LOOSE WITH VALVE AND BE WELDED TO VALVE SLEEVE WHEN INSTALLED INTO THE SUPPORT FRAME.
5. ACTUATOR, SHIELD PLUG, SHAFT, SLEEVE AND ITEMS SUCH AS FASTENERS SHIPPED LOOSE WITH ASSEMBLY.
6. SHIELD PLUG SHALL HAVE A LOCATING GROOVE THAT WILL ALLOW THE SHIELD PLUG AND ACTUATOR ASSEMBLY TO ONLY BE INSTALLED IN THE CORRECT ORIENTATION.
7. ADJUST AS REQUIRED FOR ACTUATOR DEFINED ON DATASHEET.
8. (1) VALVE BODY AND ALL COMPONENTS PROVIDING PRIMARY CONTAINMENT SHALL BE FQA. ALL OTHER COMPONENTS SHALL BE EQA, OR CQA. SEE SPECIFICATION 15-2-022.
9. THE VALVE MANUFACTURER SHALL ALLOW FOR A MINIMUM GAP/TOLERANCE OF 1/8 INCH VERTICAL MOVEMENT IN THE VALVE STEM.
10. TAG VALVE COMPONENTS IN ACCORDANCE WITH SPECIFICATION 15-2-022.
11. ALL VALVE ACTUATOR SHAFTS SHALL BE VERTICALLY SUPPORTED BY SHIELD PLUG, TO REMOVE SHAFT LOADING FROM VALVE.
12. (1) DIMENSION NOT APPLICABLE TO 6" AND 8" VALVES. VENDOR TO DETERMINE APPROPRIATE PIPE SIZE FOR 6" AND 8" VALVES.
13. HOLD APPLIES TO WHOLE COLUMN.
14. REMOVABLE PLUG FOR BORESCOPE INSPECTIONS PER 15-2-022 ON SHIELD PLUG.

(1) SEE SHEET 2 FOR VALVE TABLE

HOLD TABLE

HOLD NO	DESCRIPTION	RELEASE DATE
1	BACKPULSE IMPLEMENTATION TO BE DETERMINED BASED ON TESTING RESULTS	BY VENDOR ON APPROVAL BY BUYER
2	P&ID APPROVAL OR DESIGN COMPLETION	TBD
3	FINAL SHIELD PLUG THICKNESS PENDING APPROVAL OF SHEILDING CALC	TBD
4	FINAL VALVE LOCATIONS PENDING FINAL PIPING ANALYSIS	TBD

UNLESS OTHERWISE SPECIFIED

ALL DIMENSIONS ARE IN INCHES. REMOVE BURRS & SHARP EDGES.

THIRD ANGLE PROJECTION

TOLERANCES
.X = ±.1
.XX = ±.01
.XXX = ±.005
X/XX = ±1/16
ANGLE = ±.5 DEG
MACHINED SURFACES 125
MACHINED INSIDE RADII = .04 ±.02

APPROVED FOR AWARD
NOT FOR CONSTRUCTION

REVISION APPROVAL RECORD					REV 1
DISCIPLINE	BY	DATE	DISCIPLINE	BY	DATE
ARCH.	SF	2/13/17	MECHANICAL	DS	2/13/17
BUILDING SERVICES	N/A	N/A	PIPING	MJ	2/13/17
CIVIL	SF	2/13/17	PROCESS	[illegible]	2/13/17
ELECTRICAL	CF	2/13/17	QA / QC	PB	2/13/17
ENVIRON.	N/A	N/A	STRUCTURAL	SF	2/13/17
GEN. ARRANG.	DJ	2/13/17	CONSTRUCTION	N/A	2/13/17
I & C	HF	2/13/17	FIRE PROTECTION	KB	2/13/17
HVAC	[illegible]	2/13/17			

DRAWING STATUS				
ISSUED	REV	DATE	SDE	PEM
APPROVED FOR AWARD	1	2/13/17	DS	BGA

NOT APPROVED FOR CONSTRUCTION UNLESS SIGNED AND DATED. DESTROY ALL PRINTS BEARING EARLIER DATE AND/OR REV.NO.

AECOM
URS ENERGY & CONSTRUCTION Inc. - an AECOM Company
ATKINS
AREVA

AECOM PROJECT NO.: 31269

DWG NUMBER	TITLE	REF NUMBER	TITLE
	DRAWING TRACEABILITY LIST	NEXT USED ON	REFERENCES SEE SHEET 2 FOR VALVE TABLE

REV	DESCRIPTION	ORG	CHK	APVD	IDV	DATE
1	APPROVED FOR AWARD	BS	DJ	DS	DC	2/13/17
0	APPROVED FOR BID	RC	DJ	DS	DKC	9/19/16

REVISIONS

BLDG. NO. 202LP

INDEX NO. 8409

CAUTION
NOT COMPLETE WITHOUT CURRENT CHANGE DOCUMENTS FROM DATABASE

ATTENTION
DESTROY THIS DOCUMENT BY SHREDDING MAY CONTAIN SENSITIVE INFORMATION

NAME	DATE	COMPANY
DRAWN BY		
DRAFTING APPROVAL		
DISCIPLINE ENGINEER		
ENGINEER		

U.S. DEPARTMENT OF ENERGY
Office of River Protection

LAWPS
REMOTE VALVE
SLEEVED ASSEMBLY DPD

SIZE	DRAWING NUMBER	SHEET	REV
F	H-16-001900	1	1

SCALE SHOWN

PLOTID

DOC_TB_F.DWG (NOV 2015)

DRAWING

H-16-001900-2

LAWPS REMOTE VALVE SLEEVED ASSEMBLY DPD

VALVE TABLE

HOLD 3 (DIM C)
HOLD 4 (DIM A, DIM B)
HOLD 4

VALVE NUMBER	SIZE	DIM A	DIM B	DIM C	DATA SHEET	SOLENOID/HANDWHEEL ORIENTATION	NEXT USED ON (INFO ONLY)
VLR-129	1 1/2	101 1/4	64 1/2	7	202LP-CFA-CFF-VLR-129	270 DEG	H-16-001206
XV-141	1	TBD	TBD	7	202LP-CFA-CFF-XV-141	TBD	HOLD
XV-142	1	TBD	TBD	7	202LP-CFA-CFF-XV-142	TBD	HOLD
XV-145	1	TBD	TBD	7	202LP-CFA-CFF-XV-145	TBD	HOLD
XV-150	1	43	19	7	202LP-CFA-CFF-XV-150	270 DEG	H-16-001204
XV-151	1	43	19	7	202LP-CFA-CFF-XV-151	90 DEG	H-16-001204
XV-157	1	48 9/16	19	7	202LP-CFA-CFF-XV-157	270 DEG	H-16-001204
XV-158	1	48 9/16	19	7	202LP-CFA-CFF-XV-158	90 DEG	H-16-001204
XV-167	1	TBD	TBD	7	202LP-CFA-CFF-XV-167	TBD	HOLD
XV-174	1	TBD	TBD	7	202LP-CFA-CFF-XV-174	TBD	HOLD
VLR-128	1	106 1/4	64 1/2	7	202LP-CFA-UT-VLR-128	0 DEG	H-16-001206
VLR-206	1	110	24	7 1/2	202LP-CSA-LAG-VLR-206	270 DEG	H-16-001440
XV-225	2	34 5/16	24	7 1/2	202LP-CSA-ECS-XV-225	180 DEG	H-16-001440
XV-226	2	49 3/8	24	7 1/2	202LP-CSA-ECS-XV-226	90 DEG	H-16-001417
XV-251	2	52 15/16	24	7 1/2	202LP-CSA-ECS-XV-251	90 DEG	H-16-001419
XV-258	2	52 1/8	24	7 1/2	202LP-CSA-ECS-XV-258	180 DEG	H-16-001419
XV-277	2	52 7/16	24	7 1/2	202LP-CSA-ECS-XV-277	0 DEG	H-16-001419
XV-643	2	95 1/2	24	7 1/2	202LP-CSA-ECS-XV-643	90 DEG	H-16-001419
XV-645	2	94 13/16	24	7 1/2	202LP-CSA-ECS-XV-645	270 DEG	H-16-001419
PV-367	1 1/2	34 7/8	15 1/2	7	202LP-IXA-IX-PV-367	0 DEG	H-16-001330
VLR-204	2	120 7/8	24	7 1/2	202LP-CSA-IX-VLR-204	180 DEG	H-16-001422
VLR-205	2	120 7/8	24	7 1/2	202LP-CSA-IX-VLR-205	0 DEG	H-16-001444
VLR-467	3/4	38 1/16	24	7 1/2	202LP-CSA-ECS-VLR-467	180 DEG	H-16-001417
XV-234	2	65 7/8	24	7 1/2	202LP-CSA-IX-XV-234	90 DEG	H-16-001444
XV-287	2	65 7/8	24	7 1/2	202LP-CSA-IX-XV-287	270 DEG	H-16-001422
XV-357	2	74 7/16	24	7 1/2	202LP-CSA-IX-XV-357	270 DEG	H-16-001422
XV-358	2	74 7/16	24	7 1/2	202LP-CSA-IX-XV-358	270 DEG	H-16-001422
XV-359	2	74 7/16	24	7 1/2	202LP-CSA-IX-XV-359	90 DEG	H-16-001444
XV-360	2	74 7/16	24	7 1/2	202LP-CSA-IX-XV-360	90 DEG	H-16-001444
XV-374	2	65 7/8	24	7 1/2	202LP-CSA-IX-XV-374	270 DEG	H-16-001422
XV-375	2	65 7/8	24	7 1/2	202LP-CSA-IX-XV-375	90 DEG	H-16-001444
XV-297	2	41 5/8	24	7 1/2	202LP-CSA-RS-XV-297	90 DEG	H-16-001419
XV-298	2	41 5/8	24	7 1/2	202LP-CSA-RS-XV-298	90 DEG	H-16-001419
XV-299	2	43	24	7 1/2	202LP-CSA-RS-XV-299	0 DEG	H-16-001419
VLR-132	2	146 11/16	28 11/16	7	202LP-FFA-CFF-VLR-132	0 DEG	H-16-001102
XV-106	1	TBD	TBD	7	202LP-FFA-CFF-XV-106	TBD	TBD
XV-115	1	TBD	TBD	7	202LP-FFA-CFF-XV-115	TBD	TBD
XV-109	2	52 3/4	28 11/16	7	202LP-FFA-CFF-XV-109	180 DEG	H-16-001102
XV-119	2	53 3/16	28 11/16	7	202LP-FFA-CFF-XV-119	90 DEG	H-16-001102
XV-177	2	53 1/2	28 11/16	7	202LP-FFA-CFF-XV-177	180 DEG	H-16-001102
VLR-133	2	146 11/16	28 11/16	7	202LP-FFA-ECS-VLR-133	90 DEG	H-16-001102
XV-111	2	52 1/8	28 11/16	7	202LP-FFA-RS-XV-111	270 DEG	H-16-001102
XV-112	2	51 5/8	28 11/16	7	202LP-FFA-RS-XV-112	180 DEG	H-16-001102
XV-118	2	52 1/8	28 11/16	7	202LP-FFA-RS-XV-118	0 DEG	H-16-001102
PV-324	1 1/2	30 1/4	14	7	202LP-IXA-IX-PV-324	90 DEG	H-16-001591
VLR-341	1 1/2	24 5/16	14	7	202LP-IXA-IX-VLR-341	0 DEG	H-16-001571
XV-086	1 1/2	23 3/4	15 1/2	7	202LP-IXA-IX-XV-086	TBD	H-16-001382
XV-087	1 1/2	26 1/8	15 1/2	7	202LP-IXA-IX-XV-087	TBD	H-16-001330
XV-203	1 1/2	26 3/16	15 1/2	7	202LP-IXA-IX-XV-203	270 DEG	H-16-001382
XV-204	1 1/2	27 1/8	15 1/2	7	202LP-IXA-IX-XV-204	0 DEG	H-16-001382
XV-206	1 1/2	36 1/2	15 1/2	7	202LP-IXA-IX-XV-206	180 DEG	H-16-001330
XV-209	1 1/2	23 1/2	15 1/2	7	202LP-IXA-IX-XV-209	0 DEG	H-16-001382
XV-212	3	47 5/8	15 1/2	7	202LP-RH-IX-XV-212	90 DEG	H-16-001382
XV-213	3	44 9/16	15 1/2	7	202LP-RH-IX-XV-213	0 DEG	H-16-001382

HOLD 1 (XV-141, XV-142, XV-145)
HOLD 1 (XV-150, XV-151)
HOLD 1 (XV-157, XV-158)
HOLD 1 (XV-167, XV-174)
HOLD 2 (XV-106, XV-115)
HOLD 2 (XV-086, XV-087)

VALVE TABLE CONTINUED

HOLD 3 (DIM C)
HOLD 4 (DIM A, DIM B)
HOLD 4

VALVE NUMBER	SIZE	DIM A	DIM B	DIM C	DATA SHEET	SOLENOID/HANDWHEEL ORIENTATION	NEXT USED ON (INFO ONLY)
XV-214	1 1/2	37 1/16	15 1/2	7	202LP-IXA-IX-XV-214	180 DEG	H-16-001330
XV-235	1 1/2	31 3/16	15 1/2	7	202LP-IXA-IX-XV-235	0 DEG	H-16-001330
XV-238	1 1/2	21 5/8	15 1/2	7	202LP-IXA-IX-XV-238	0 DEG	H-16-001330
XV-240	1 1/2	18 9/16	15 1/2	7	202LP-IXA-IX-XV-240	0 DEG	H-16-001330
XV-252	1 1/2	25 15/16	15 1/2	7	202LP-IXA-IX-XV-252	0 DEG	H-16-001382
XV-262	1 1/2	21 3/4	15 1/2	7	202LP-IXA-IX-XV-262	0 DEG	H-16-001330
XV-301	1 1/2	33 9/16	14	7	202LP-IXA-IX-XV-301	90 DEG	H-16-001591
XV-307	1 1/2	28 9/16	14	7	202LP-IXA-IX-XV-307	90 DEG	H-16-001591
XV-316	1	20 1/4	15 1/2	7	202LP-IXA-IX-XV-316	90 DEG	H-16-001330
XV-330	1	48 5/8	14	7	202LP-IXA-IX-XV-330	90 DEG	H-16-001591
XV-335	2	25 5/16	14	7	202LP-IXA-IX-XV-335	270 DEG	H-16-001571
XV-337	1 1/2	25 13/16	15 1/2	7	202LP-IXA-IX-XV-337	0 DEG	H-16-001382
XV-338	1 1/2	23 11/16	15 1/2	7	202LP-IXA-IX-XV-338	0 DEG	H-16-001330
XV-341	3	47 3/8	15 1/2	7	202LP-IXA-RH-XV-341	90 DEG	H-16-001382
XV-342	3	47 1/16	15 1/2	7	202LP-IXA-RH-XV-342	90 DEG	H-16-001382
XV-343	3	49	15 1/2	7	202LP-IXA-RH-XV-343	270 DEG	H-16-001382
XV-361	1 1/2	49	15 1/2	7	202LP-IXA-IX-XV-361	0 DEG	H-16-001330
XV-362	1 1/2	48 9/18	15 1/2	7	202LP-IXA-IX-XV-362	0 DEG	H-16-001330
XV-363	1 1/2	21 1/2	15 1/2	7	202LP-IXA-IX-XV-363	0 DEG	H-16-001382
XV-364	1 1/2	21 15/16	15 1/2	7	202LP-IXA-IX-XV-364	0 DEG	H-16-001382
XV-365	1 1/2	20 3/4	15 1/2	7	202LP-IXA-IX-XV-365	180 DEG	H-16-001330
XV-310	1 1/2	34 11/15	14	7	202LP-IXA-LAG-XV-310	0 DEG	H-16-001591
XV-311	1 1/2	34 15/16	14	7	202LP-IXA-LAG-XV-311	180 DEG	H-16-001591
XV-312	1 1/2	34	14	7	202LP-IXA-LAG-XV-312	0 DEG	H-16-001591
XV-237	2	25 11/16	14	7	202LP-IXA-RH-XV-237	270 DEG	H-16-001571
XV-245	2	26 7/16	14	7	202LP-IXA-RH-XV-245	270 DEG	H-16-001571
XV-246	2	26 7/18	14	7	202LP-IXA-RH-XV-246	0 DEG	H-16-001571
XV-247	2	24 13/18	14	7	202LP-IXA-RH-XV-247	180 DEG	H-16-001571
XV-376	2	25 1/2	14	7	202LP-IXA-RH-XV-376	0 DEG	H-16-001571
VLR-159	2	20 7/8	14	7	202LP-IXA-RS-VLR-159	90 DEG	H-16-001571
XV-249	2	25 15/16	14	7	202LP-IXA-RS-XV-249	0 DEG	H-16-001571
XV-261	2	23 9/16	14	7	202LP-IXA-RS-XV-261	180 DEG	H-16-001571
XV-271	2	21 9/16	14	7	202LP-IXA-RS-XV-271	90 DEG	H-16-001571
XV-949A	8	TBD	TBD	7	202LP-VE-BVV-XV-949A	TBD	H-16-001830
XV-949B	8	TBD	TBD	7	202LP-VE-BVV-XV-949B	TBD	H-16-001830
XV-950A	6	TBD	TBD	7	202LP-VE-BVV-XV-950A	TBD	H-16-001830
XV-950B	6	TBD	TBD	7	202LP-VE-BVV-XV-950B	TBD	H-16-001830

HOLD 2 (XV-949A, XV-949B, XV-950A, XV-950B)

NOTES:

FOR GENERAL NOTES AND PARTS LIST SEE SHEET 1.

UNLESS OTHERWISE SPECIFIED
ALL DIMENSIONS ARE IN INCHES.
REMOVE BURRS & SHARP EDGES.
THIRD ANGLE PROJECTION
TOLERANCES
.X = ±.1
.XX = ±.01
.XXX = ±.005
X/XX = ±1/16
ANGLE = ±.5 DEG
MACHINED SURFACES 125
MACHINED INSIDE
RADII = .04 ±.02

REVISION APPROVAL RECORD				REV 0	
DISCIPLINE	BY	DATE	DISCIPLINE	BY	DATE
ARCH.	SF	2/13/17	MECHANICAL	DS	2/13/17
BUILDING SERVICES	N/A	N/A	PIPING	MJ	2/13/17
CIVIL	SF	2/13/17	PROCESS	MK	2/13/17
ELECTRICAL	[illegible]	2/13/17	QA / QC	PB	2/13/17
ENVIRON.	N/A	N/A	STRUCTURAL	SF	2/13/17
GEN. ARRANG.	DJ	2/13/17	CONSTRUCTION	N/A	2/13/17
I & C	HF	2/13/17	FIRE PROTECTION	KB	2/13/17
HVAC	ML	2/13/17			

DRAWING STATUS				
ISSUED	REV	DATE	SDE	PEM
APPROVED FOR AWARD	0	2/13/17	DS	BGA

NOT APPROVED FOR CONSTRUCTION UNLESS SIGNED AND DATED. DESTROY ALL PRINTS BEARING EARLIER DATE AND/OR REV.NO.

AECOM
URS ENERGY & CONSTRUCTION Inc. - an AECOM Company
ATKINS
AREVA

AECOM PROJECT NO.: 31269

DWG NUMBER	TITLE
DRAWING TRACEABILITY LIST	

REF NUMBER	TITLE
NEXT USED ON	SEE VALVE TABLE

REFERENCES

REV	DESCRIPTION	ORG	CHK	APVD	IDV	DATE
0	APPROVED FOR AWARD	BS	DJ	DS	DC	2/13/17

REV NO. DESCRIPTION
REVISIONS

APPROVED FOR AWARD
NOT FOR CONSTRUCTION

R.O.D. NO. 202LP
PROJ.C NO. 8409

CAUTION
NOT COMPLETE WITHOUT CURRENT CHANGE DOCUMENTS FROM DATABASE

ATTENTION
DESTROY THIS DOCUMENT BY SHREDDING MAY CONTAIN SENSITIVE INFORMATION

NAME | DATE | COMPANY

U.S. DEPARTMENT OF ENERGY
Office of River Protection

LAWPS
REMOTE VALVE
SLEEVED ASSEMBLY DPD

SIZE F | DRAWING NUMBER H-16-001900 | SHEET 2 | REV 0
SCALE NOTED
PLOTID

DRAWING

H-16-001901

LAWPS REMOTE VALVE SHAFT ASSEMBLY DPD

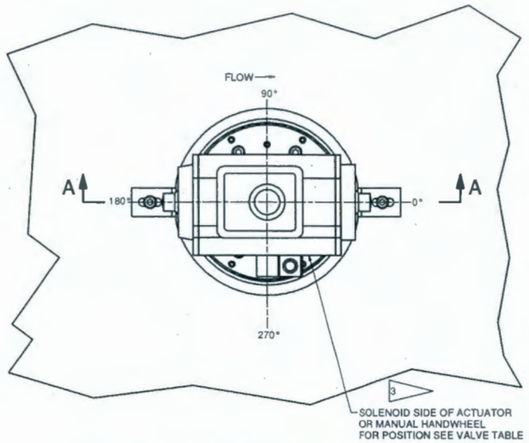

REMOTE VALVE SHAFT ASSEMBLY

SCALE 1/4

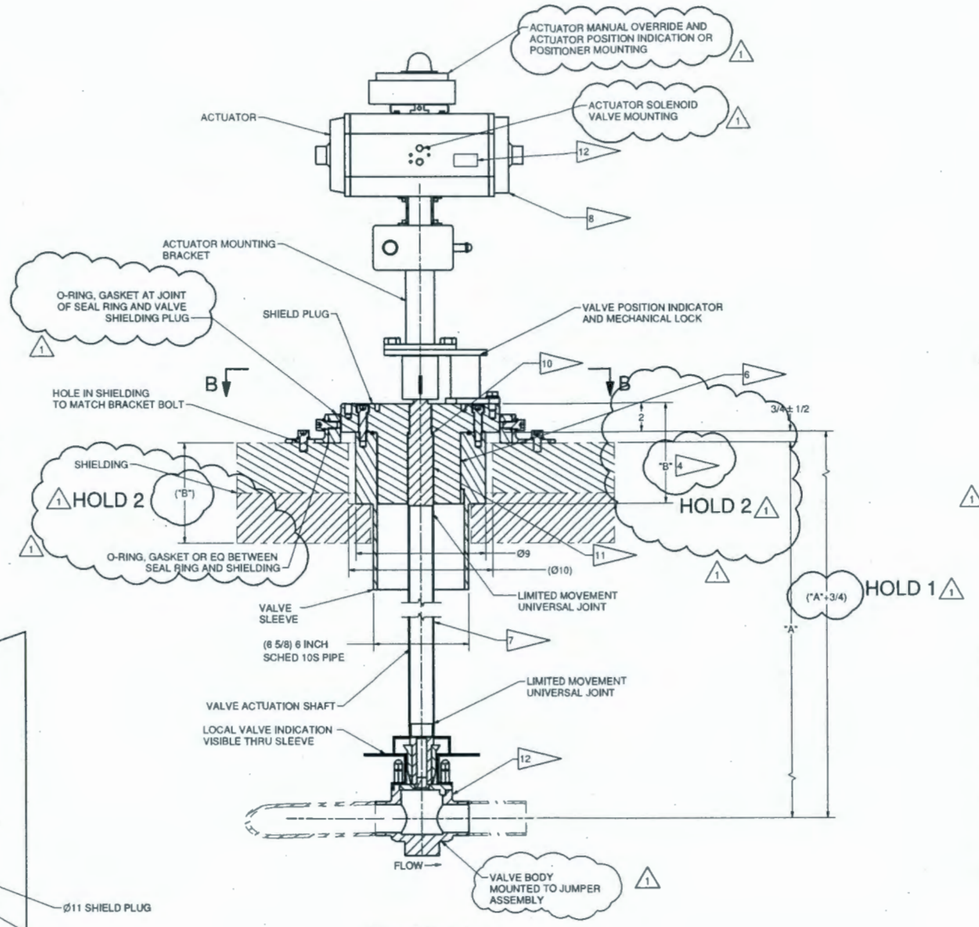

SECTION A-A

SCALE 1/4

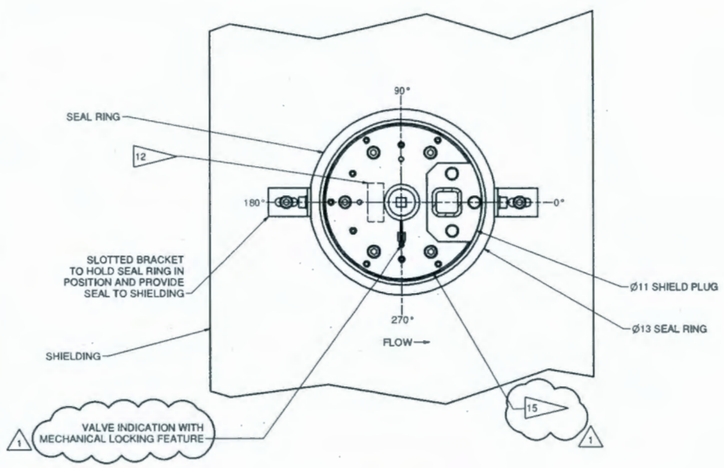

SECTION B-B

SCALE 1/4

GENERAL NOTES:

1. DIMENSIONS AND TOLERANCES ARE IN ACCORDANCE WITH ASME Y14.5M-1994.
2. (1) FABRICATE, INSPECT, AND TEST IN ACCORDANCE WITH SPECIALTY VALVE AND INSTRUMENT PROCUREMENT SPECIFICATION 15-2-022.
3. ACTUATOR ORIENTATION WILL BE VALVE DEPENDANT TO PREVENT INTERFERENCES WITH OTHER ACTUATORS AND SOLENOID VALVES.
4. SHIM AS REQUIRED TO SUPPORT VALVE.
5. ACTUATOR, SHIELD PLUG, SHAFT, AND ITEMS SUCH AS FASTENERS SHIPPED LOOSE WITH ASSEMBLY.
6. SHIELD PLUG SHALL HAVE A LOCATING GROOVE THAT WILL ALLOW THE SHIELD PLUG AND ACTUATOR ASSEMBLY TO ONLY BE INSTALLED IN THE CORRECT ORIENTATION.
7. FINAL SHAFT LENGTH SHALL BE ADJUSTED DURING INSTALLATION.
8. ADJUST AS REQUIRED FOR ACTUATOR DEFINED ON DATASHEET.
9. (1) VALVE BODY AND ALL COMPONENTS PROVIDING PRIMARY CONTAINMENT SHALL BE FOA. ALL OTHER COMPONENTS SHALL BE EOA, OR COA. SEE SPECIFICATION 15-2-022.
10. THE VALVE MANUFACTURER SHALL ALLOW FOR A MINIMUM GAP/TOLERANCE OF 1/8 INCH VERTICAL MOVMENT IN THE VALVE STEM.
11. ALL VALVE ACTUATOR SHAFTS SHALL BE VERTICALY SUPPORTED BY SHIELD PLUG, TO REMOVE SHAFT LOADING FROM VALVE.
12. TAG VALVE COMPONENTS IN ACCORDANCE WITH SPECIFICATION 15-2-022.
13. (1) ORIENTATION INDICATED ON VALVE TABLE IS FOR SOLENOID/HAND WHEEL.
14. HOLD APPLIES TO WHOLE COLUMN.
15. REMOVABLE PLUG FOR BORESCOPE INSPECTIONS PER 15-2-022 ON SHIELD PLUG.

14 1 HOLD 2

14 1 HOLD 1

1

VALVE TABLE

VALVE NUMBER	SIZE	DIM A	DIM B	DATA SHEET	ORIENTATION	NEXT USED ON (INFO ONLY)
FV-136	1	51 7/16	7	202LP-CFA-CFF-FV-136	90 DEG	H-16-001225
FV-183	1	51 7/16	7	202LP-CFA-CFF-FV-183	90 DEG	H-16-001225
XV-139	1	21 7/8	7	202LP-CFA-CFF-XV-139	270 DEG	H-16-001222
XV-140	1	21 7/8	7	202LP-CFA-CFF-XV-140	90 DEG	H-16-001219
XV-166	1	148 5/8	7	202LP-CFA-CFF-XV-166	0 DEG	H-16-001217
XV-169	1	148 5/8	7	202LP-CFA-CFF-XV-169	90 DEG	H-16-001220
XV-180	2	222 5/16	7	202LP-CFA-CFF-XV-180	0 DEG	H-16-001214
XV-181	2	222 5/16	7	202LP-CFA-CFF-XV-181	90 DEG	H-16-001215
XV-182	2	198 5/16	7	202LP-CFA-CFF-XV-182	270 DEG	H-16-001226
VLR-200	1	113 3/4	7 1/2	202LP-CSA-IX-VLR-200	270 DEG	H-16-001424
VLR-201	1	113 3/4	7 1/2	202LP-CSA-IX-VLR-201	270 DEG	H-16-001424
VLR-202	1	113 3/4	7 1/2	202LP-CSA-IX-VLR-202	270 DEG	H-16-001424
VLR-203	1	113 3/4	7 1/2	202LP-CSA-IX-VLR-203	270 DEG	H-16-001424
VLR-230	2	220 1/2	9	202LP-IXA-IX-VLR-230	270 DEG	H-16-001349
VLR-242	2	220 1/2	9	202LP-IXA-IX-VLR-242	90 DEG	H-16-001350
VLR-347	2	228 7/8	7	202LP-IXA-IX-VLR-347	180 DEG	H-16-001582

HOLD TABLE

	HOLD NO	DESCRIPTION	RELEASE DATE
1	1	FINAL VALVE LOCATIONS PENDING FINAL PIPING ANALYSIS	TBD
1	2	FINAL SHIELD PLUG THICKNESS PENDING APPROVAL OF SHIELDING CALC	TBD

APROVED FOR AWARD
NOT FOR CONSTRUCTION

UNLESS OTHERWISE SPECIFIED
ALL DIMENSIONS ARE IN INCHES.
REMOVE BURRS & SHARP EDGES.
THIRD ANGLE PROJECTION
TOLERANCES
.X = ±.1
.XX = ±.01
.XXX = ±.005
X/XX = ± 1/16
ANGLE = ± .5 DEG
MACHINED SURFACES 125
MACHINED INSIDE RADII = .04 ±.02

REVISION APPROVAL RECORD — REV 1

DISCIPLINE	BY	DATE	DISCIPLINE	BY	DATE
ARCH.	SF	2/13/17	MECHANICAL	DS	2/13/17
BUILDING SERVICES	N/A	N/A	PIPING	MJ	2/13/17
CIVIL	SF	2/13/17	PROCESS	MW	2/13/17
ELECTRICAL	CF	2/13/17	QA / QC	PB	2/13/17
ENVIRON.	N/A	N/A	STRUCTURAL	SF	2/13/17
GEN. ARRANG.	DJ	2/13/17	CONSTRUCTION	N/A	2/13/17
I & C	HF	2/13/17	FIRE PROTECTION	KB	2/13/17
HVAC	WL	2/13/17			

DRAWING STATUS

ISSUED	REV	DATE	SDE	PEM
APPROVED FOR AWARD	1	2/13/17	DS	BG

NOT APPROVED FOR CONSTRUCTION UNLESS SIGNED AND DATED. DESTROY ALL PRINTS BEARING EARLIER DATE AND/OR REV.NO.

AECOM
URS ENERGY & CONSTRUCTION Inc. - an AECOM Company
ATKINS
AREVA

AECOM PROJECT NO.: 31269

DWG NUMBER	TITLE

DRAWING TRACEABILITY LIST

REF NUMBER	TITLE

REFERENCES

NEXT USED ON SEE VALVE TABLE

REV	DESCRIPTION	ORG	CHK	APVD	IDV	DATE
1	APPROVED FOR AWARD	BS	DJ	DS	DC	2/13/17
0	APPROVED FOR BID	RC	DJ	DS	DKC	9/19/16

REVISIONS

BLDG. NO. 202LP

INDEX NO. 8409

CAUTION
NOT COMPLETE WITHOUT CURRENT CHANGE DOCUMENTS FROM DATABASE

ATTENTION
DESTROY THIS DOCUMENT BY SHREDDING
MAY CONTAIN SENSITIVE INFORMATION

NAME	DATE	COMPANY
DRAWN BY		
DRAFTING APPROVAL		
DISCIPLINE ENGINEER		
ENGINEER		

U.S. DEPARTMENT OF ENERGY
Office of River Protection

LAWPS
REMOTE VALVE
SHAFT ASSEMBLY DPD

SIZE F | DRAWING NUMBER H-16-001901 | SHEET 1 | REV 1

SCALE SHOWN

PLOTID

DRAWING

H-16-001902

LAWPS 202LP-FFA-CFF-PV-101 VALVE DPD

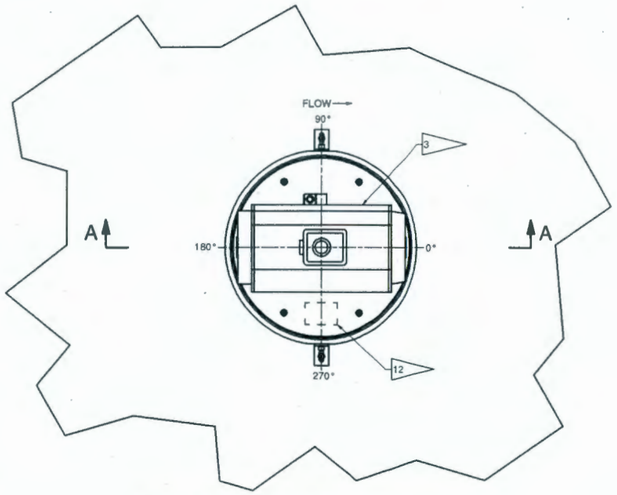

REMOTE VALVE SLEEVE ASSEMBLY

SCALE 1/8

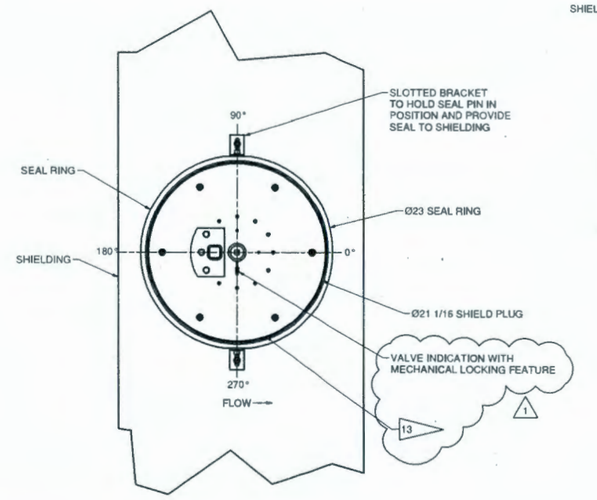

SECTION B-B

SCALE 1/8

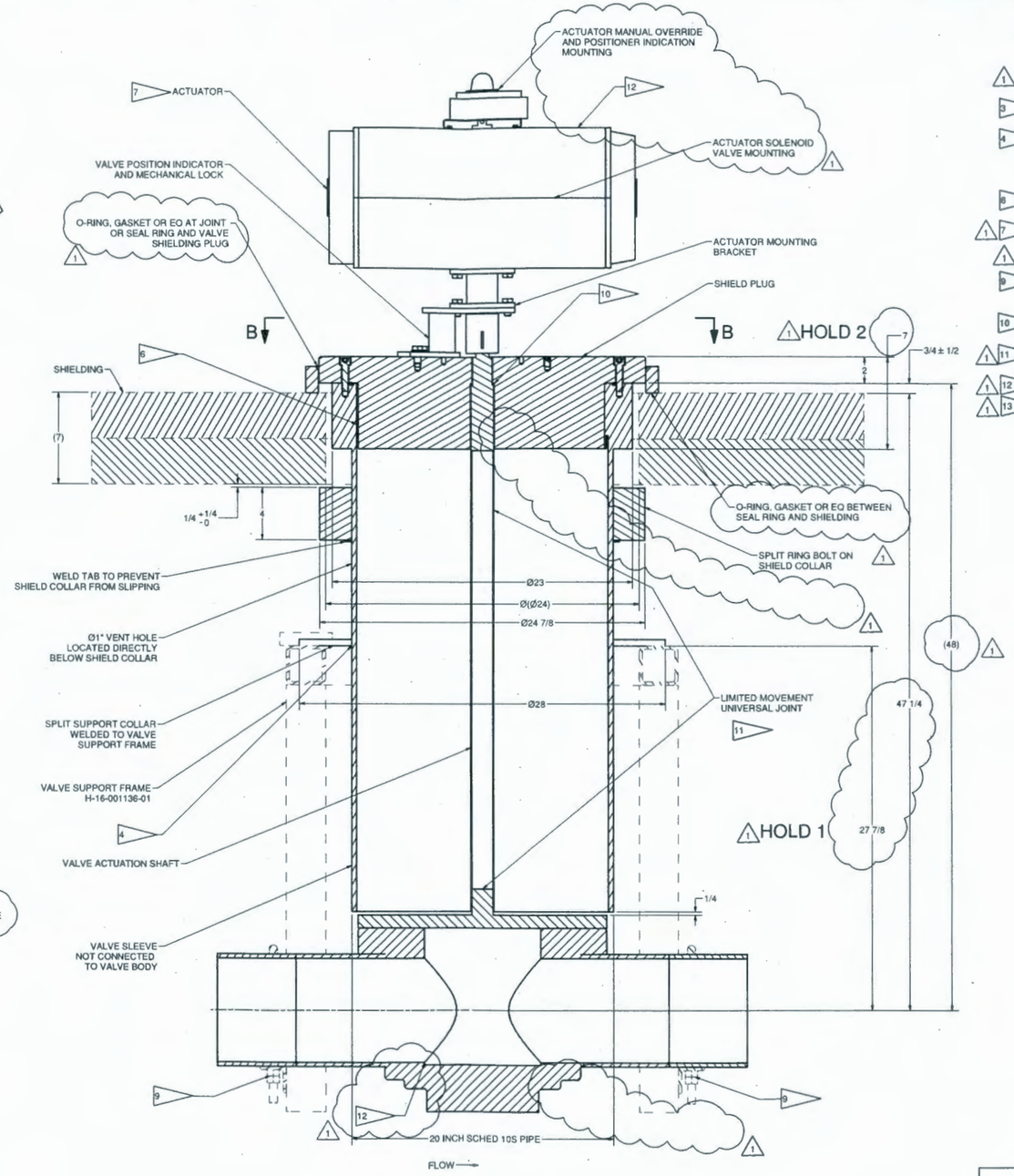

SECTION A-A

SCALE 1/4

GENERAL NOTES:

1. DIMENSIONS AND TOLERANCES ARE IN ACCORDANCE WITH ASME Y14.5M-1994.
2. FABRICATE, INSPECT, AND TEST IN ACCORDNCE WITH SPECIALTY VALVE AND INSTRUMENT PROCURMENT SPECIFICATION 15-2-022.
3. ACTUATOR ORIENTATION WILL BE VALVE DEPENDANT TO PREVENT INTERFERENCES WITH OTHER ACTUATORS AND SOLENOID VALVES.
4. SPLIT RING COLLAR TO BE SHIPPED LOOSE WITH VALVE AND BE WELDED TO VALVE SLEEVE WHEN INSTALLED INTO THE SUPPORT FRAME.
5. ACTUATOR, SHIELD PLUG, SHAFT, SLEEVE AND ITEMS SUCH AS FASTENERS SHIPPED LOOSE WITH ASSEMBLY.
6. SHIELD PLUG SHALL HAVE A LOCATING GROOVE THAT WILL ALLOW THE SHIELD PLUG AND ACTUATOR ASSEMBLY TO ONLY BE INSTALLED IN THE CORRECT ORIENTATION.
7. ADJUST AS REQUIRED FOR ACTUATOR DEFINED ON DATASHEET 202LP-FFA-CFF-PV-101.
8. VALVE BODY AND ALL COMPONENTS PROVIDING PRIMARY CONTAINMENT SHALL BE FQA. ALL OTHER COMPONENTS SHALL BE EQA OR CQA. SEE SPECIFICATION 15-2-022.
9. VALVE BODY WILL BE SUPPORTED BY PIPING IN ACTUAL PIT INSTALLATION. THIS U-BOLT SUPPORT IS TEMPORARY TO ASSIST IN FABRICATION, SET UP, AND INSTALLATION. AFTER VALVE ASSEMBLY IS WELDED INTO POSITION THE U-BOLT WILL BE REMOVED.
10. THE VALVE MANUFACTURE SHALL ALLOW FOR A MINIMUM GAP/TOLERANCE OF 1/8 INCH VERTICAL MOVEMENT IN THE VALVE STEM.
11. SHAFT DESIGN SHALL ALLOW FOR VERTICAL, LATERAL, AND ROTATIONAL DISPLACEMENT AS SPECIFIED IN 15-2-022.
12. TAG VALVE COMPONENTS IN ACCORDANCE WITH SPECIFICATION 15-2-022.
13. REMOVABLE PLUG FOR BORESCOPE INSPECTIONS PER 15-2-022 ON SHIELD PLUG.

HOLD TABLE

HOLD NO	DESCRIPTION	RELEASE DATE
1	FINAL VALVE LOCATIONS PENDING FINAL PIPING ANALYSIS	TBD
2	FINAL SHIELD PLUG THICKNESS PENDING APPROVAL OF SHIELDING CALC	TBD

UNLESS OTHERWISE SPECIFIED

ALL DIMENSIONS ARE IN INCHES. REMOVE BURRS & SHARP EDGES.

THIRD ANGLE PROJECTION

TOLERANCES
.X = ±.1
.XX = ±.01
.XXX = ±.005
X/XX = ±1/16
ANGLE = ±.5 DEG
MACHINED SURFACES 125
MACHINED INSIDE RADII = .04 ±.02

REVISION APPROVAL RECORD — REV 1

DISCIPLINE	BY	DATE	DISCIPLINE	BY	DATE
ARCH.	SF	2/13/17	MECHANICAL	DS	2/13/17
BUILDING SERVICES	N/A	N/A	PIPING	MJ	2/13/17
CIVIL	SF	2/13/17	PROCESS		2/13/17
ELECTRICAL	CF	2/13/17	QA / QC	PB	2/13/17
ENVIRON.	N/A	N/A	STRUCTURAL	SF	2/13/17
GEN. ARRANG.	DJ	2/13/17	CONSTRUCTION	N/A	2/13/17
I & C	HF	2/13/17	FIRE PROTECTION	KB	2/13/17
HVAC	WLR	2/13/17			

DRAWING STATUS

ISSUED	REV	DATE	SDE	PEM
APPROVED FOR AWARD	1	2/13/17	DS	BGA

NOT APPROVED FOR CONSTRUCTION UNLESS SIGNED AND DATED. DESTROY ALL PRINTS BEARING EARLIER DATE AND/OR REV.NO.

AECOM
URS ENERGY & CONSTRUCTION Inc. - an AECOM Company
ATKINS
AREVA

AECOM PROJECT NO.: 31269

DWG NUMBER	TITLE

DRAWING TRACEABILITY LIST

REF NUMBER	TITLE

REFERENCES

NEXT USED ON H-16-001136-01

REV	DESCRIPTION	ORG	CHK	APVD	IDV	DATE
1	APPROVED FOR AWARD	BS	DJ	DS	DC	2/13/17
0	APPROVED FOR BID	RC	DJ	DS	DKC	9/19/16

REVISIONS

APPROVED FOR AWARD
NOT FOR CONSTRUCTION

BLDG. NO. 202LP

INDEX NO. 8405

CAUTION
NOT COMPLETE WITHOUT CURRENT CHANGE DOCUMENTS FROM DATABASE

ATTENTION
DESTROY THIS DOCUMENT BY SHREDDING MAY CONTAIN SENSITIVE INFORMATION

NAME	DATE	COMPANY
DRAWN BY		
CHIEF ENG APPROVAL		
DISCIPLINE ENGINEER		
ENGINEERING CHECKER		
DESIGN AUTHORITY		

U.S. DEPARTMENT OF ENERGY
Office of River Protection

LAWPS
202LP-FFA-CFF-PV-101
VALVE DPD

SIZE F | DRAWING NUMBER H-16-001902 | SHEET 1 | REV 1

SCALE SHOWN

PLOTID

DRAWING

H-16-001903

LAWPS REMOTE PIT SLEEVED ASSEMBLY DPD

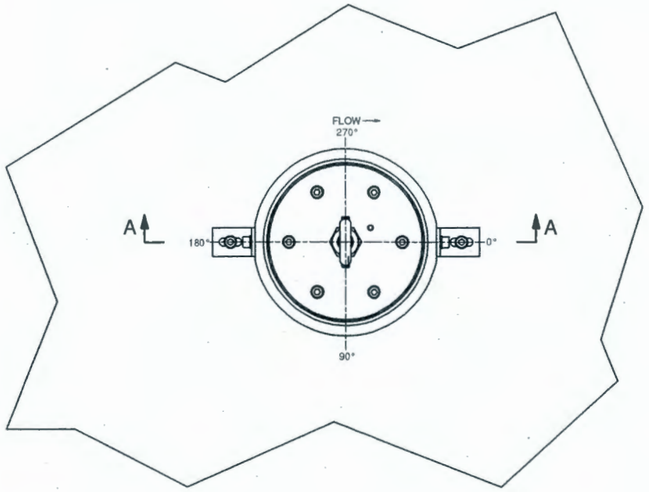

REMOTE PIT SLEEVED ASSEMBLY
SCALE 1/4

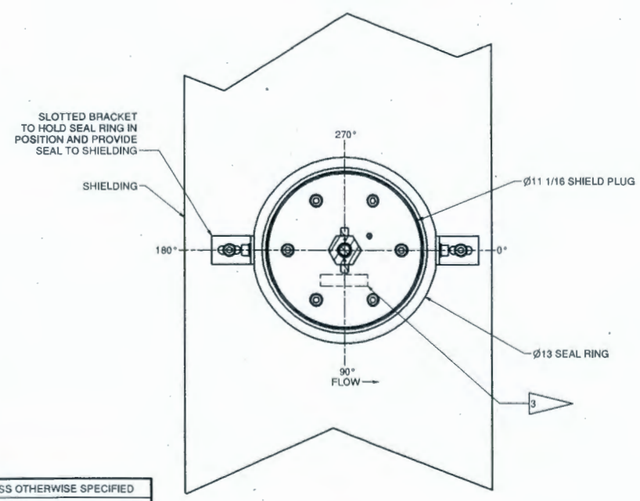

SECTION B-B
SCALE 1/4

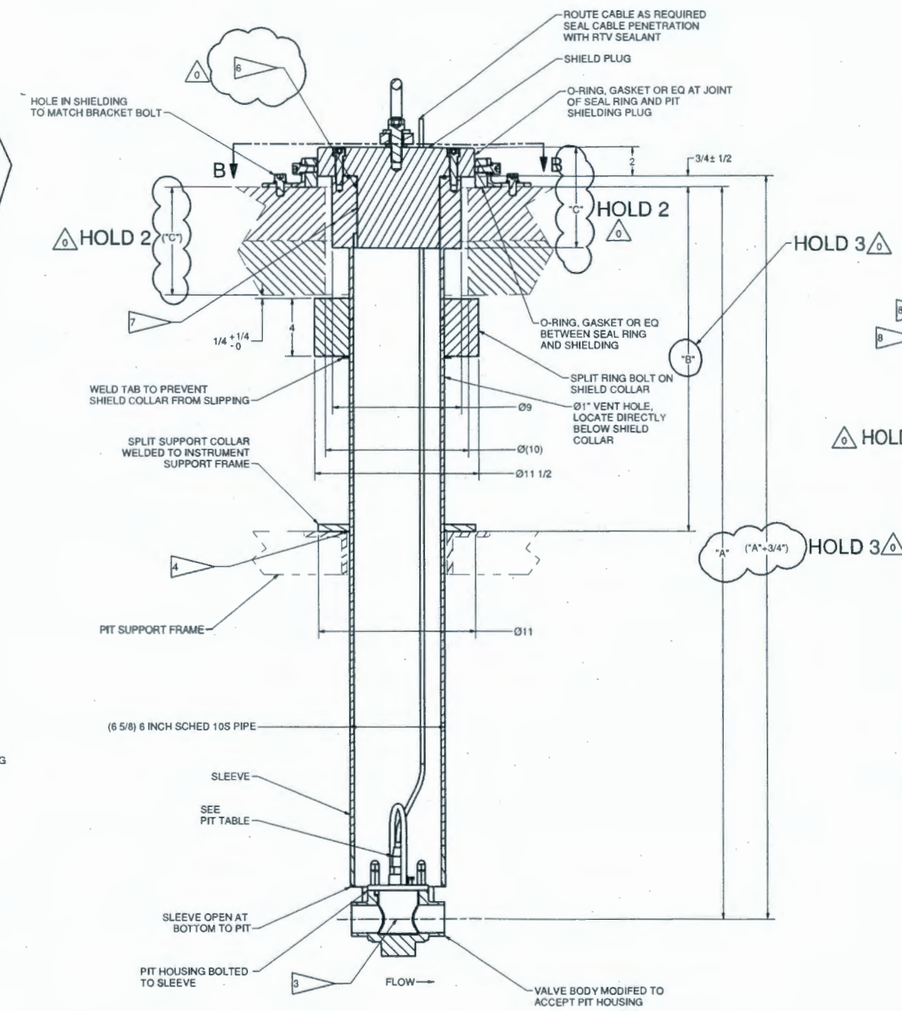

SECTION A-A
SCALE 1/4

GENERAL NOTES:

1. DIMENSIONS AND TOLERANCES ARE IN ACCORDANCE WITH ASME Y14.5M-1994.
2. FABRICATE, INSPECT, AND TEST IN ACCORDANCE WITH SPECIFICATION 15-2-022.
3. TAG INSTRUMENT COMPONENTS IN ACCORDANCE WITH SPECIFICATION 15-2-022.
4. SPLIT RING COLLAR TO BE SHIPPED LOOSE AND BE WELDED TO VALVE SLEEVE WHEN INSTALLED INTO THE SUPPORT FRAME.
5. SHIELD PLUG, SHAFT, SLEEVE AND ITEMS SUCH AS FASTENERS SHIPPED LOOSE WITH ASSEMBLY.
6. SHIELD PLUG SHALL HAVE A LOCATING GROOVE THAT WILL ALLOW THE SHIELD PLUG TO ONLY BE INSTALLED IN THE CORRECT ORIENTATION.
7. INSTRUMENT BODY AND ALL COMPONENTS PROVIDING PRIMARY CONTAINMENT SHALL BE FQA. ALL OTHER COMPONENTS SHALL BE EQA OR CQA. SEE SPECIFICATION 15-2-022.
8. HOLD APPLIES TO WHOLE COLUMN.

HOLD 1

PIT TABLE

VALVE NUMBER	DIM "A"	DIM "B"	DIM "C"	DATA SHEET	NEXT USED ON (INFO ONLY)
PIT-129	HOLD	HOLD	HOLD	202LP-CFA-CFF-PIT-129	HOLD
PIT-202	26 3/4	15 1/2	7	202LP-IXA-IX-PIT-202	H-16-001382-01
PIT-224	22 11/16	15 1/2	7	202LP-IXA-IX-PIT-224	H-16-001382-01
PIT-241	20 5/8	15 1/2	7	202LP-IXA-IX-PIT-241	H-16-001330-01
PIT-324	30 3/16	14	7	202LP-IXA-IX-PIT-324	H-16-001591-01
PIT-325	29 1/16	14	7	202LP-IXA-IX-PIT-325	H-16-001591-01
PIT-368	33 15/16	15 1/2	7	202LP-IXA-IX-PIT-368	H-16-001330-01
PIT-369	34 9/16	15 1/2	7	202LP-IXA-IX-PIT-369	H-16-001330-01
PIT-660	51 1/16	24	7 1/2	202LP-CSA-ECS-PIT-660	H-16-001417-01

HOLD TABLE

HOLD NO	DESCRIPTION	RELEASE DATE
1	BACKPULSE IMPLEMENTATION TO BE DETERMINED BASED ON TESTING RESULTS	BY VENDOR ON APPROVAL BY BUYER
2	FINAL SHIELD PLUG THICKNESS PENDING APPROVAL OF SHIELDING CALC	TBD
3	FINAL LOCATIONS PENDING PIPING ANALYSIS	TBD

UNLESS OTHERWISE SPECIFIED
ALL DIMENSIONS ARE IN INCHES.
REMOVE BURRS & SHARP EDGES.
THIRD ANGLE PROJECTION
TOLERANCES
.X = ±.1
.XX = ±.01
.XXX = ±.005
X/XX = ±1/16
ANGLE = ±.5 DEG
MACHINED SURFACES 125
MACHINED INSIDE
RADII = .04 ±.02

APPROVED FOR AWARD
NOT FOR CONSTRUCTION

REVISION APPROVAL RECORD — REV 0

DISCIPLINE	BY	DATE	DISCIPLINE	BY	DATE
ARCH.	SF	2/13/17	MECHANICAL	DS	2/13/17
BUILDING SERVICES	N/A	N/A	PIPING	MJ	2/13/17
CIVIL	SF	2/13/17	PROCESS	AY	2/13/17
ELECTRICAL	CF	2/13/17	QA / QC	PB	2/13/17
ENVIRON.	N/A	N/A	STRUCTURAL	SF	2/13/17
GEN. ARRANG.	DJ	2/13/17	CONSTRUCTION	N/A	2/13/17
I & C	HF	2/13/17	FIRE PROTECTION	KB	2/13/17
HVAC	ML	2/13/17			

DRAWING STATUS

ISSUED	REV	DATE	SDE	PEM
APPROVED FOR AWARD	0	2/13/17	DS	BGA

NOT APPROVED FOR CONSTRUCTION UNLESS SIGNED AND DATED. DESTROY ALL PRINTS BEARING EARLIER DATE AND/OR REV.NO.

AECOM
URS ENERGY & CONSTRUCTION Inc. - an AECOM Company
ATKINS
AREVA
AECOM PROJECT NO.: 31269

DWG NUMBER	TITLE

DRAWING TRACEABILITY LIST

REF NUMBER	TITLE

REFERENCES
NEXT USED ON SEE PIT TABLE

REV	DESCRIPTION	ORG	CHK	APVD	IDV	DATE
0	APPROVED FOR AWARD	BS	DJ	DS	DC	2/13/17

REVISIONS

BLDG. NO. 202LP
INDEX NO. 8409

CAUTION
NOT COMPLETE WITHOUT CURRENT CHANGE DOCUMENTS FROM DATABASE

ATTENTION
DESTROY THIS DOCUMENT BY SHREDDING
MAY CONTAIN SENSITIVE INFORMATION

NAME / DATE / COMPANY
DRAWN BY
DRAFTING APPROVAL
DESIGN ENGINEER

U.S. DEPARTMENT OF ENERGY
Office of River Protection

LAWPS
REMOTE PIT
SLEEVED ASSEMBLY DPD

SIZE F | DRAWING NUMBER H-16-001903 | SHEET 1 | REV 0
SCALE SHOWN
PLOTTED

DRAWING

H-16-001908

LAWPS FIT/PIT INSTRUMENT SUPPORT ASSEMBLY

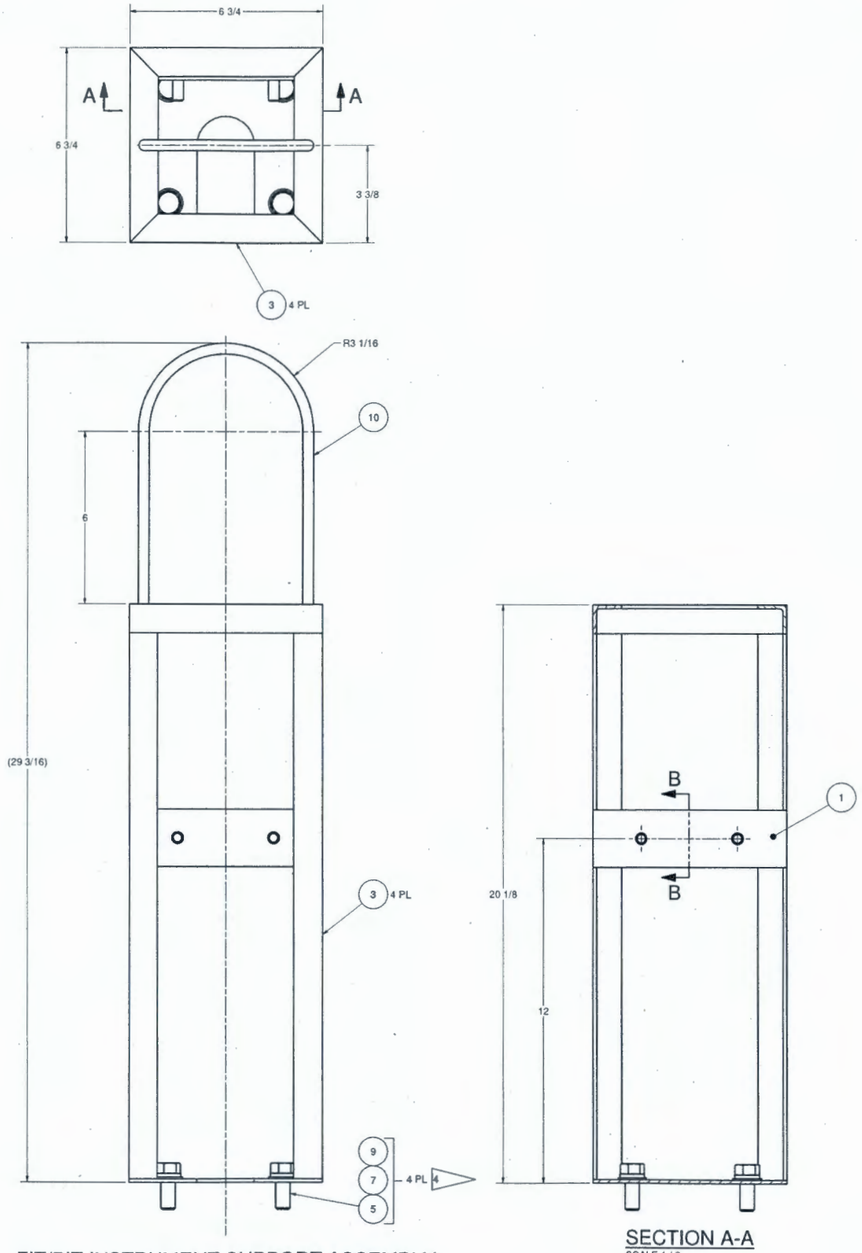

FIT/PIT INSTRUMENT SUPPORT ASSEMBLY
SCALE 1 / 2

SECTION A-A
SCALE 1 / 2

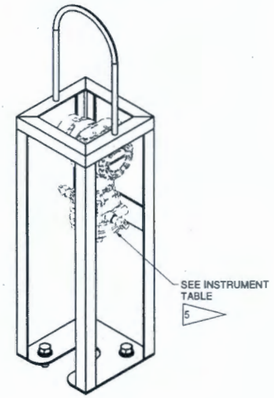

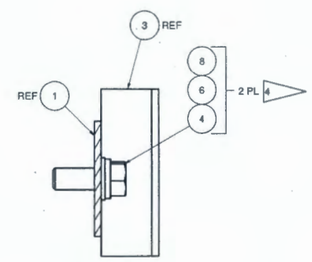

SECTION B-B
SCALE 1/1

PARTS/MATERIAL LIST

QL	QTY	PART/DRAWING NUMBER	NOMENCLATURE/DESCRIPTION	MATERIAL/REFERENCE	SH	ITEM
CQA	1	N/A	BRACKET,SHEET, 2 X 6 3/4 X 11 GA SST	ASTM A240 304L SST	1	1
CQA	1	N/A	BASE, SHEET, 6 3/4 X 6 3/4 X 11 GA SST	ASTM A240 304L SST	1	2
CQA	AR	N/A	L 1 x 1 x 1/8 THK	ASTM A276 304L SST	N/A	3
CQA	2	N/A	BOLT, HEX 3/8 - 16 UNC - 2A	ASTM A193M GR B8M CL1 SST	N/A	4
CQA	4	N/A	BOLT, HEX 1/2 - 13 UNC - 2A	ASTM A193M GR B8M CL1 SST	N/A	5
CQA	2	N/A	WASHER, PLAIN 3/8	ANY 300 SERIES SST	N/A	6
CQA	4	N/A	WASHER, PLAIN 1/2	ANY 300 SERIES SST	N/A	7
CQA	2	N/A	WASHER, HELICAL LOCK, 3/8	ANY 300 SERIES SST	N/A	8
CQA	4	N/A	WASHER, HELICAL LOCK, 1/2	ANY 300 SERIES SST	N/A	9
CQA	AR	N/A	BAR, ROUND, 3/4 INCH	ASTM A240 304L SST	N/A	10

GENERAL NOTES:

1. DIMENSIONS AND TOLERANCES ARE IN ACCORDANCE WITH ASME Y14.5M-1994.
2. APPROXIMATE WEIGHT IS 19 LBS.
3. FABRICATION SHALL BE IN ACCORDANCE WITH CROSS FLOW FILTER SYSTEM PROCUREMENT SPECIFICATION 15-2-001.
4. BOLTS AND WASHER TO BE SHIPPED LOOSE.
5. INSTRUMENT CAPILLARY TUBE ROUTED TO INSTRUMENT LOCATED IN PIT.
6. CENTER INSTRUMENT AND TEMPLATE HOLES TO MATCH.

PIT INSTRUMENT JUMER					
INSTRUMENT	JUMPER	DATASHEET	P&ID #	QL	NEXT USED ON
FIT - 180	CFFP02-SL-J-[2-3]	202LP-CFF-CFA-PIT-180	H-16-000022	FQA	H-16-001142

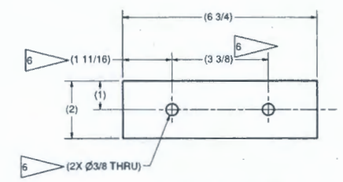

1 BRACKET
SCALE: 1/2

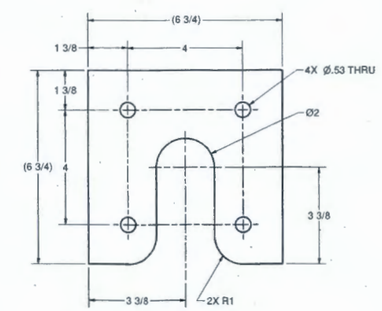

2 BASE
SCALE: 1/2

UNLESS OTHERWISE SPECIFIED
ALL DIMENSIONS ARE IN INCHES.
REMOVE BURRS & SHARP EDGES.
THIRD ANGLE PROJECTION
TOLERANCES
.X = ±.1
.XX = ±.01
.XXX = ±.005
X/XX = ± 1/16
ANGLE = ±.5 DEG
MACHINED SURFACES 125
MACHINED INSIDE
RADII = .04 ±.02

REVISION APPROVAL RECORD					REV 0
DISCIPLINE	BY	DATE	DISCIPLINE	BY	DATE
ARCH.	SF	9/19/16	MECHANICAL	DS	9/19/16
BUILDING SERVICES	N/A	N/A	PIPING	MJ	9/19/16
CIVIL	SF	9/19/16	PROCESS	MW	9/19/16
ELECTRICAL	CF	9/19/16	QA / QC	PB	9/19/16
ENVIRON.	N/A	N/A	STRUCTURAL	SF	9/19/16
GEN. ARRANG.	DJ	9/19/16			
I & C	HF	9/19/16			
HVAC	WL	9/19/16			

DRAWING STATUS				
ISSUED	REV	DATE	SDE	PEM
APPROVED FOR BID	0	9/19/16	DS	BGA

NOT APPROVED FOR CONSTRUCTION UNLESS SIGNED AND DATED. DESTROY ALL PRINTS BEARING EARLIER DATE AND/OR REV.NO.

AECOM
URS ENERGY & CONSTRUCTION Inc. - an AECOM Company
ATKINS
AREVA

AECOM PROJECT NO.: 31269

DWG NUMBER	TITLE	REF NUMBER	TITLE
	DRAWING TRACEABILITY LIST	NEXT USED ON	REFERENCES SEE INSTRUMENT TABLE

APROVED FOR BID
NOT FOR CONSTRUCTION

REV	DESCRIPTION	ORG	CHK	APVD	RDV	DATE
0	APPROVED FOR BID	RC	DJ	DS	DKC	9/19/16

REVISIONS

BLDG. NO. 202LP
INDEX NO. 8405 8409

CAUTION
NOT COMPLETE WITHOUT CURRENT CHANGE DOCUMENTS FROM DATABASE

ATTENTION
DESTROY THIS DOCUMENT BY SHREDDING
MAY CONTAIN SENSITIVE INFORMATION

NAME	DATE	COMPANY
DRAWN BY		
CHECKED BY		
DISCIPLINE ENGINEER		
ENGINEER		

U.S. DEPARTMENT OF ENERGY
Office of River Protection

LAWPS
FIT/PIT INSTRUMENT SUPPORT ASSY

SIZE F | DRAWING NUMBER H-16-001908 | SHEET 1 | REV 0
SCALE NOTED

PLOTTED

DRAWING

H-16-001920

LAWPS TANK THERMOWELL TYPICAL DETAIL

PARTS/MATERIAL LIST						
QL	QTY	PART/DRAWING NUMBER	NOMENCLATURE/DESCRIPTION	MATERIAL/REFERENCE	SH	ITEM
FQA	1	N/A	TEMPERATURE NOZZLE TIP, RND BAR 1 3/8 INCH DIA	ASTM A276 316L SST	1	1
FQA	1	N/A	PIPE 1 1/4 INCH, SCHED 80S	ASTM A312 TP316/316L SST	1	3

THERMOWELL TYPICAL DETAIL
SCALE 1/2

1 TEMPERATURE N
SCALE: 1/1

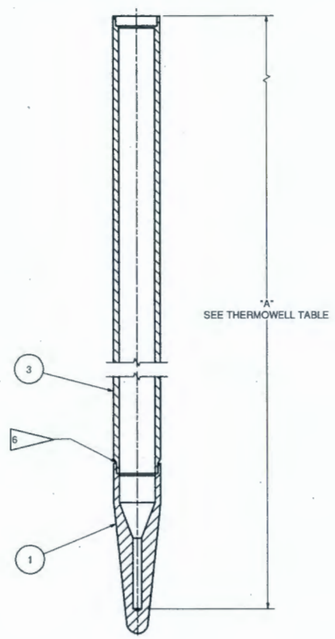

SECTION A-A
SCALE 1/2

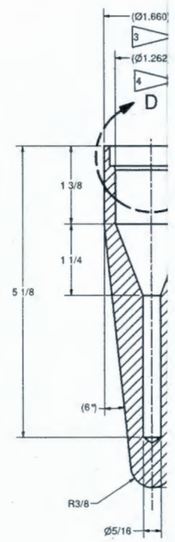

SECTION
SCALE 1/

THERMOWELL TABLE			
TANK	INSTRUMENT	LENGTH "A" (INCHES)	NEXT USED ON
CFF-TK-100	TE-113	97 1/8"	H-16-001280, SHT 4
IX-IXC-200	TE-275	97 1/8"	H-16-001311, SHT 1
IX-IXC-201	TE-219	97 1/8"	H-16-001311, SHT 1

UNLESS OTHERWISE SPECIFIED

ALL DIMENSIONS ARE IN INCHES.
REMOVE BURRS & SHARP EDGES.

THIRD ANGLE PROJECTION

TOLERANCES
.X = ±.1
.XX = ±.01
.XXX = ±.005
X/XX = ± 1/16
ANGLE = ±.5 DEG
MACHINED SURFACES 125
MACHINED INSIDE RADII = .04 ±.02

REVISION APPROVAL RECORD					REV 0
DISCIPLINE	BY	DATE	DISCIPLINE	BY	DATE
ARCH.	SF	9/19/16	MECHANICAL	DS	9/19/16
BUILDING SERVICES	N/A	N/A	PIPING	MJ	9/19/16
CIVIL	SF	9/19/16	PROCESS	MW	9/19/16
ELECTRICAL	CF	9/19/16	QA / QC	PB	9/19/16
ENVIRON.	N/A	N/A	STRUCTURAL	SF	9/19/16
GEN. ARRANG.	DJ	9/19/16			
I & C	HF	9/19/16			
HVAC	WL	9/19/16			

DRAWING STATUS				
ISSUED	REV	DATE	SDE	PEM
APPROVED FOR BID	0	9/19/16	DS	BGA

NOT APPROVED FOR CONSTRUCTION UNLESS SIGNED AND DATED. DESTROY ALL PRINTS BEARING EARLIER DATE AND/OR REV.NO.

AECOM
URS ENERGY & CONSTRUCTION Inc. - an AECOM Company
ATKINS
AREVA

AECOM PROJECT NO.: 31269

DWG NUMBER	TITLE
DRAWING TRACEABILITY LIST	

REF NUMBER	TITLE
REFERENCES	
NEXT USED ON	SEE THERMOWELL TABLE

APROVED FOR BID
NOT FOR CONSTRUCTION

REV	DESCRIPTION	ORG	CHK	APVD	IDV	DATE
0	APPROVED FOR BID	RC	DJ	DS	DKC	9/19/16

REV NO. — DESCRIPTION
REVISIONS

DLDS. NO. 202LP

INDEX NO. 2502

CAUTION
NOT COMPLETE WITHOUT CURRENT CHANGE DOCUMENTS FROM DATABASE

ATTENTION
DESTROY THIS DOCUMENT BY SHREDDING MAY CONTAIN SENSITIVE INFORMATION

NAME	DATE	COMPANY
DRAWN BY		
DISCIPLINE APPROVAL		
DISCIPLINE ENGINEER		
ENGINEER		

U.S. DEPARTMENT OF ENERGY
Office of River Protection

LAWPS
TANK THERMOWELL
TYPICAL DETAIL

SIZE F | DRAWING NUMBER H-16-001920 | SHEET 1 | REV 0
SCALE NOTED
PLOTTED

DRAWING

H-16-001920

LAWPS TANK THERMOWELL TYPICAL DETAIL

DRAWING

H-16-001924-1

LAWPS REMOTE NUT SLEEVE ASSEMBLY

PARTS/MATERIAL LIST

QL	QTY	PART/DRAWING NUMBER	NOMENCLATURE/DESCRIPTION	MATERIAL/REFERENCE	SH	ITEM
FQA	1	N/A	REMOTE NUT, RND BAR	ASTM A276 304L SST	1,2	1
EQA	1	N/A	REMOTE NUT SLEEVE, 4 INCH PIPE SCHED 80S	ASTM A312 TP 316/316L SST	1,2	2
CQA	1	N/A	REMOTE NUT WASHER, 3/8 PLATE	ASTM A240 304L SST	1,2	3
CQA	1	N/A	BAR, 1 1/2 X 1/4 THICK X 5 1/2 LG	ASTM A276 304L SST	1	4
CQA	1	(N5000-400)	RETAINING RING	(WALDES TRUARC)	1	5

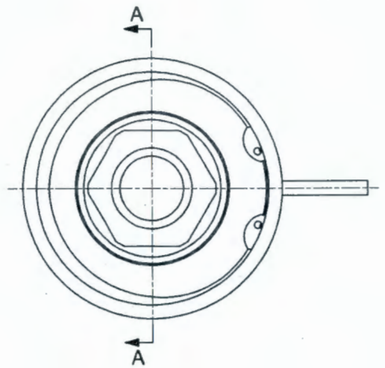

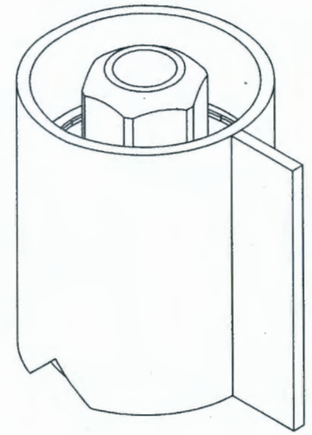

GENERAL NOTES:

1. DIMENSIONS AND TOLERANCES ARE IN ACCORDANCE WITH ASME Y14.5M-1994.
2. APPROXIMATE WEIGHT = 15 LBS
3. DESIGN AND FABRICATION SHALL BE IN ACCORDANCE WITH SPECIFICAITON LISTED IN TABLE 1.
4. REMOTE NUT SLEEVE IS WELDED TO FLANGE ASSEMBLY AS SHOWN ON THE NEXT USED ITEM (SEE TABLE 1). THE REMOTE NUT IS SHIPPED WITH THE SLEEVE ASSEMBLY AND WILL BE CONTAINED WHEN THE SLEEVE IS WELDED DOWN.

4

TABLE 1

NEXT USED ON	QTY	SPECIFICATION
H-16-001209-01	12	15-2-001
H-16-001211-01	12	15-2-001
H-16-001311-01	8	15-2-003
H-16-001121-01	6	15-2-001
H-16-001131-01	6	15-2-001

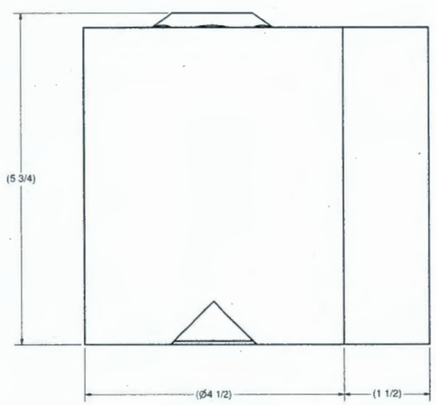

REMOTE NUT SLEEVE ASSEMBLY
SCALE 1 : 1

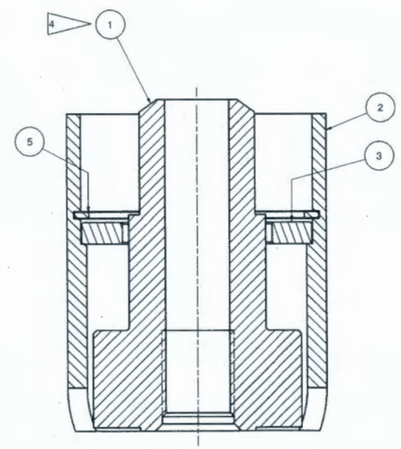

SECTION A-A
SCALE 1 : 1

UNLESS OTHERWISE SPECIFIED
ALL DIMENSIONS ARE IN INCHES.
REMOVE BURRS & SHARP EDGES.
THIRD ANGLE PROJECTION
TOLERANCES
.X = ±.1
.XX = ±.01
.XXX = ±.005
X/XX = ±1/16
ANGLE = ±.5 DEG
MACHINED SURFACES 125
MACHINED INSIDE RADII = .04 ±.02

REVISION APPROVAL RECORD					REV 0
DISCIPLINE	BY	DATE	DISCIPLINE	BY	DATE
ARCH.	SF	9/19/16	MECHANICAL	DS	9/19/16
BUILDING SERVICES	N/A	N/A	PIPING	MJ	9/19/16
CIVIL	SF	9/19/16	PROCESS	MW	9/19/16
ELECTRICAL	CF	9/19/16	QA / QC	PB	9/19/16
ENVIRON.	N/A	N/A	STRUCTURAL	SF	9/19/16
GEN. ARRANG.	DJ	9/19/16			
I & C	HF	9/19/16			
HVAC	WL	9/19/16			

DRAWING STATUS				
ISSUED	REV	DATE	SDE	PEM
APPROVED FOR BID	0	9/19/16	DS	BGA

NOT APPROVED FOR CONSTRUCTION UNLESS SIGNED AND DATED. DESTROY ALL PRINTS BEARING EARLIER DATE AND/OR REV.NO.

AECOM
URS ENERGY & CONSTRUCTION Inc. - an AECOM Company
ATKINS
AREVA

AECOM PROJECT NO.: 31269

DWG NUMBER	TITLE
	DRAWING TRACEABILITY LIST

REF NUMBER	TITLE
NEXT USED ON	SEE TABLE 1

REFERENCES

APROVED FOR BID
NOT FOR CONSTRUCTION

REV	DESCRIPTION	ORG	CHK	APVD	IDV	DATE
0	APPROVED FOR BID	RC	DJ	DS	DKC	9/19/16

REVISIONS

BLDG. NO. 202LP

INDEX NO. 2510 8405 8409

CAUTION
NOT COMPLETE WITHOUT CURRENT CHANGE DOCUMENTS FROM DATABASE

ATTENTION
DESTROY THIS DOCUMENT BY SHREDDING MAY CONTAIN SENSITIVE INFORMATION

NAME	DATE	COMPANY
DRAWN BY		
CHAIRTRAC APPROVAL		
CHIEF/LEAD ENGINEER		
ENGINEER		

U.S. DEPARTMENT OF ENERGY
Office of River Protection

LAWPS
REMOTE NUT SLEEVE
ASSEMBLY

SIZE F | DRAWING NUMBER H-16-001924 | SHEET 1 | REV 0

SCALE NOTED

PLOTID

DOE_TS_F.DWG (NOV 2016)

DRAWING

H-16-001924-2

LAWPS REMOTE NUT SLEEVE ASSEMBLY

NOTES:

FOR GENERAL NOTES AND PARTS LIST SEE SHEET 1.

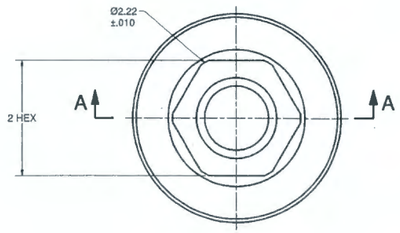

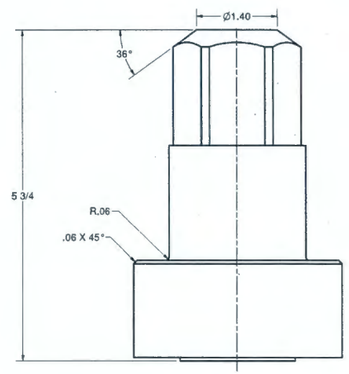

1 REMOTE NUT
SCALE: 1/1

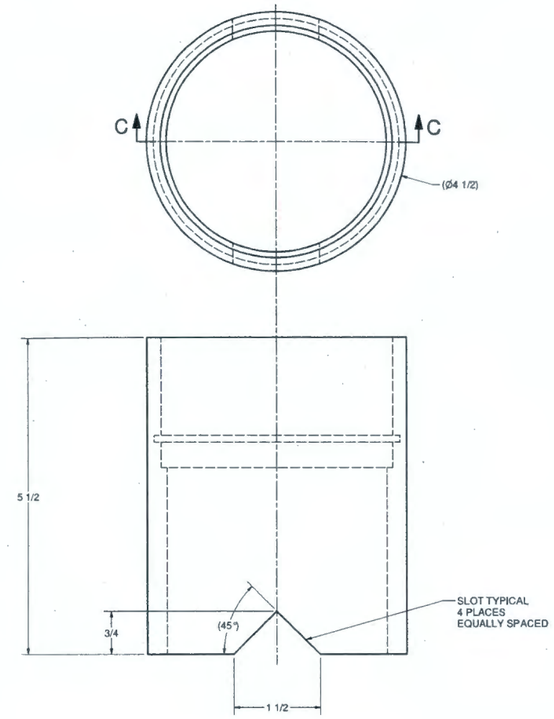

2 REMOTE NUT SLEEVE
SCALE: 1/1

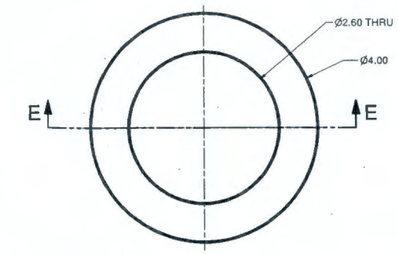

3 REMOTE NUT WASHER
SCALE: 1/1

SECTION E-E
SCALE 1/1

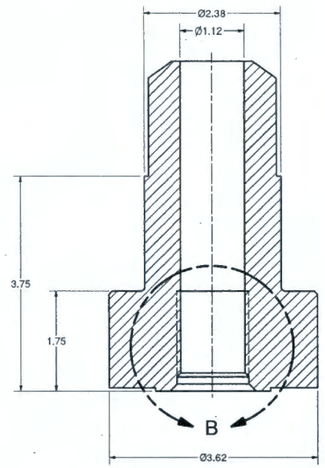

SECTION A-A
SCALE 1/1

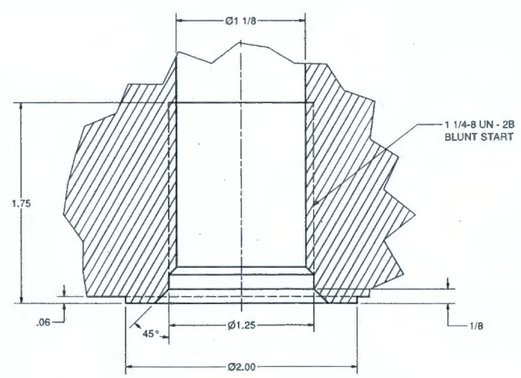

DETAIL B
SCALE 2/1

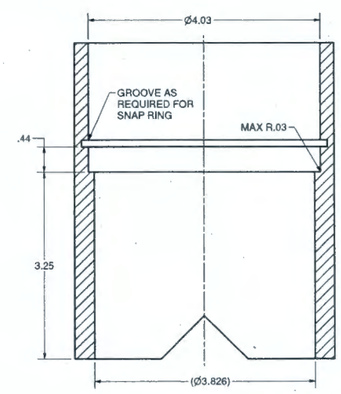

SECTION C-C
SCALE 1 : 1

UNLESS OTHERWISE SPECIFIED

ALL DIMENSIONS ARE IN INCHES.
REMOVE BURRS & SHARP EDGES.

THIRD ANGLE PROJECTION

TOLERANCES
.X = ± .1
.XX = ± .01
.XXX = ± .005
X/XX = ± 1/16
ANGLE = ± .5 DEG
MACHINED SURFACES 125
MACHINED INSIDE
RADII = .04 ±.02

REVISION APPROVAL RECORD				REV 0	
DISCIPLINE	BY	DATE	DISCIPLINE	BY	DATE
ARCH.	SF	9/19/16	MECHANICAL	DS	9/19/16
BUILDING SERVICES	N/A	N/A	PIPING	MJ	9/19/16
CIVIL	SF	9/19/16	PROCESS	MW	9/19/16
ELECTRICAL	CF	9/19/16	QA / QC	PB	9/19/16
ENVIRON.	N/A	N/A	STRUCTURAL	SF	9/19/16
GEN. ARRANG.	DJ	9/19/16			
I & C	HF	9/19/16			
HVAC	WL	9/19/16			

DRAWING STATUS				
ISSUED	REV	DATE	SDE	PEM
APPROVED FOR BID	0	9/19/16	DS	BGA

NOT APPROVED FOR CONSTRUCTION UNLESS SIGNED AND DATED. DESTROY ALL PRINTS BEARING EARLIER DATE AND/OR REV.NO.

AECOM
URS ENERGY & CONSTRUCTION Inc. - an AECOM Company
ATKINS
AREVA

AECOM PROJECT NO.: 31269

DWG NUMBER	TITLE
DRAWING TRACEABILITY LIST	

REF NUMBER	TITLE
REFERENCES	
NEXT USED ON	SHEET 1

APROVED FOR BID
NOT FOR CONSTRUCTION

REV NO.	DESCRIPTION	ORG	CHK	APVD	IDV	DATE
0	APPROVED FOR BID	RC	DJ	DS	DKC	9/19/16

REVISIONS

BLDG. NO. 202LP

INDEX NO. 2510 8409

CAUTION
NOT COMPLETE WITHOUT CURRENT CHANGE DOCUMENTS FROM DATABASE

ATTENTION
DESTROY THIS DOCUMENT BY SHREDDING MAY CONTAIN SENSITIVE INFORMATION

NAME	DATE	COMPANY
DRAWN BY		
CROSS-FWD APPROVAL		
DISCIPLINE ENGINEER		
ENGINEER		

U.S. DEPARTMENT OF ENERGY
Office of River Protection

LAWPS
REMOTE NUT SLEEVE
ASSEMBLY

SIZE F | DRAWING NUMBER H-16-001924 | SHEET 2 | REV 0

SCALE NOTED

PLOTTED

DOC_TB_7.DWG (NOV 2016)

DRAWING

H-16-001925

LAWPS JUMPER NOZZLE CONNECTION 2" PUREX KICKOFF ASSEMBLY

PARTS/MATERIAL LIST

QL	QTY	PART/DRAWING NUMBER	NOMENCLATURE/DESCRIPTION	MATERIAL/REFERENCE	SH	ITEM
3 FQA	1	H-2-90185-01	MALE NOZZLE, 2" PUREX	316/316L SST	1	1
CQA	1	N/A	PLATE, 6 1/4 OD X 3/8 THK	ASTM A240M 304L SST	1	2

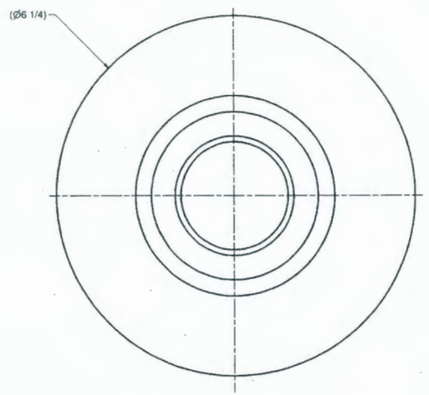

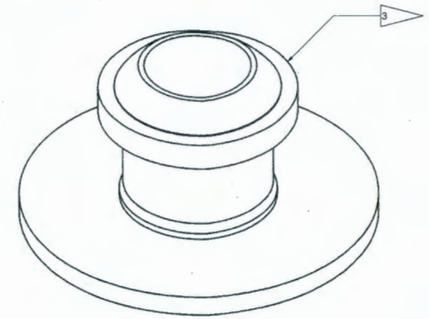

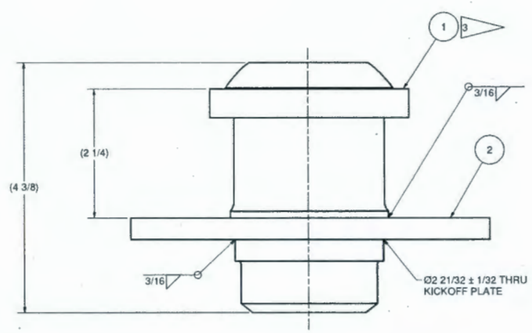

2" PUREX KICKOFF ASSEMBLY

SCALE 1/1

GENERAL NOTES:

1. DIMENSIONS AND TOLERANCES ARE IN ACCORDANCE WITH ASME Y14.5M-1994.
2. FABRICATION SHALL BE IN ACCORDANCE WITH SPECIFICATION LISTED IN TABLE 1.
3. PUREX NOZZLE TO BE PROVIDED BY BUYER.

TABLE 1

NEXT USED ON	QTY	SPECIFICATION
H-16-001131-01	1	15-2-001
H-16-001202-01	6	15-2-001
H-16-001311-01	6	15-2-003

UNLESS OTHERWISE SPECIFIED

ALL DIMENSIONS ARE IN INCHES.
REMOVE BURRS & SHARP EDGES.

THIRD ANGLE PROJECTION

TOLERANCES
.X = ±.1
.XX = ±.01
.XXX = ±.005
X/XX = ±1/16
ANGLE = ±.5 DEG
MACHINED SURFACES 125
MACHINED INSIDE
RADII = .04 ±.02

REVISION APPROVAL RECORD — REV 0

DISCIPLINE	BY	DATE	DISCIPLINE	BY	DATE
ARCH.	SF	9/19/16	MECHANICAL	DS	9/19/16
BUILDING SERVICES	N/A	N/A	PIPING	MJ	9/19/16
CIVIL	SF	9/19/16	PROCESS	MW	9/19/16
ELECTRICAL	CF	9/19/16	QA / QC	PB	9/19/16
ENVIRON.	N/A	N/A	STRUCTURAL	SF	9/19/16
GEN. ARRANG.	DJ	9/19/16			
I & C	HF	9/19/16			
HVAC	WL	9/19/16			

DRAWING STATUS

ISSUED	REV	DATE	SDE	PEM
APPROVED FOR BID	0	9/19/16	DS	BGA

NOT APPROVED FOR CONSTRUCTION UNLESS SIGNED AND DATED. DESTROY ALL PRINTS BEARING EARLIER DATE AND/OR REV.NO.

AECOM
URS ENERGY & CONSTRUCTION Inc. - an AECOM Company
ATKINS
AREVA

AECOM PROJECT NO.: 31269

DWG NUMBER	TITLE
	DRAWING TRACEABILITY LIST

REF NUMBER	TITLE
NEXT USED ON	REFERENCES SEE TABLE 1

APROVED FOR BID
NOT FOR CONSTRUCTION

REV	DESCRIPTION	ORG	CHK	APVD	IDV	DATE
0	APPROVED FOR BID	RC	DJ	DS	DKC	9/19/16

REVISIONS

BLDG. NO. 202LP

INDEX NO. 8405 8409

CAUTION
NOT COMPLETE WITHOUT CURRENT CHANGE DOCUMENTS FROM DATABASE

ATTENTION
DESTROY THIS DOCUMENT BY SHREDDING MAY CONTAIN SENSITIVE INFORMATION

NAME	DATE	COMPANY
DRAWN BY		
DRAWING APPROVAL		
DISCIPLINE ENGINEER		
ENGINEER		

U.S. DEPARTMENT OF ENERGY
Office of River Protection

LAWPS
JUMPER NOZZLE CONNECTION
2" PUREX KICKOFF ASSEMBLY

SIZE F | DRAWING NUMBER H-16-001925 | SHEET 1 | REV 0

SCALE NOTED

PLOTID

DOE_TB_1_DWG (NOV 2013)

DRAWING

H-16-001926

LAWPS JUMPER NOZZLE CONNECTION 1" PUREX KICKOFF ASSEMBLY

PARTS/MATERIAL LIST

QL	QTY	PART/DRAWING NUMBER	NOMENCLATURE/DESCRIPTION	MATERIAL/REFERENCE	SH	ITEM
3 FQA	1	H-2-90184-01	MALE NOZZLE 1" PUREX	316/316L SST	1	1
CQA	1	N/A	PLATE, 6 OD X 3/8 THK	ASTM A240 304L SST	1	2

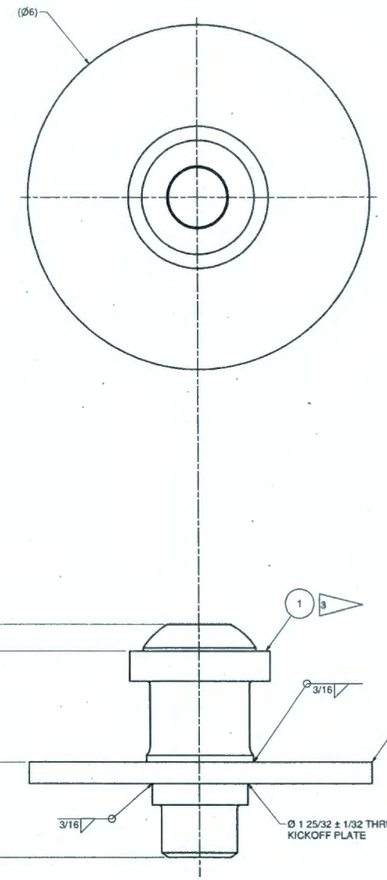

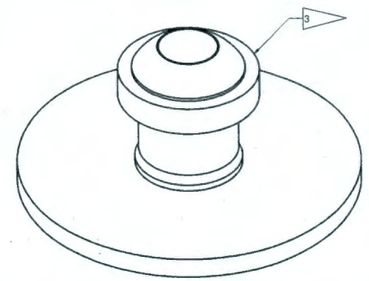

1" PUREX KICKOFF ASSEMBLY

SCALE 1/1

GENERAL NOTES:

1. DIMENSIONS AND TOLERANCES ARE IN ACCORDANCE WITH ASME Y14.5M-1994.
2. FABRICATION SHALL BE IN ACCORDANCE WITH SPECIFICATION LISTED IN TABLE 1.
3. PUREX NOZZLE TO BE PROVIDED BY BUYER.

TABLE 1

NEXT USED ON	QTY	SPECIFICATION
H-16-001206-01	4	15-2-001
H-16-001209-01	3	15-2-001
H-16-001211-01	3	15-2-001
H-16-001311-01	2	15-2-003

UNLESS OTHERWISE SPECIFIED

ALL DIMENSIONS ARE IN INCHES.
REMOVE BURRS & SHARP EDGES.

THIRD ANGLE PROJECTION

TOLERANCES
.X = ±.1
.XX = ±.01
.XXX = ±.005
X/XX = ±1/16
ANGLE = ±.5 DEG
MACHINED SURFACES 125
MACHINED INSIDE
RADII = .04 ±.02

REVISION APPROVAL RECORD				REV 0	
DISCIPLINE	BY	DATE	DISCIPLINE	BY	DATE
ARCH.	SF	9/19/16	MECHANICAL	DS	9/19/16
BUILDING SERVICES	N/A	N/A	PIPING	MJ	9/19/16
CIVIL	SF	9/19/16	PROCESS	MW	9/19/16
ELECTRICAL	CF	9/19/16	QA / QC	PB	9/19/16
ENVIRON.	N/A	N/A	STRUCTURAL	SF	9/19/16
GEN. ARRANG.	DJ	9/19/16			
I & C	HF	9/19/16			
HVAC	WL	9/19/16			

DRAWING STATUS				
ISSUED	REV	DATE	SDE	PEM
APPROVED FOR BID	0	9/19/16	DS	BGA

NOT APPROVED FOR CONSTRUCTION UNLESS SIGNED AND DATED. DESTROY ALL PRINTS BEARING EARLIER DATE AND/OR REV.NO.

AECOM
URS ENERGY & CONSTRUCTION Inc. - an AECOM Company
ATKINS
AREVA

AECOM PROJECT NO.: 31269

DWG NUMBER	TITLE
DRAWING TRACEABILITY LIST	

REF NUMBER	TITLE
REFERENCES	
NEXT USED ON	SEE TABLE 1

APROVED FOR BID
NOT FOR CONSTRUCTION

REV	DESCRIPTION	ORG	CHK	APVD	IDV	DATE
0	APPROVED FOR BID	RC	DJ	DS	DKC	9/19/16

REVISIONS

SLDG. NO. 202LP

INDEX NO. 8405 8409

CAUTION
NOT COMPLETE WITHOUT CURRENT CHANGE DOCUMENTS FROM DATABASE

ATTENTION
DESTROY THIS DOCUMENT BY SHREDDING MAY CONTAIN SENSITIVE INFORMATION

NAME	DATE	COMPANY
DRAWN BY		
DRAFTING APPROVAL		
DISCIPLINE ENGINEER		
ENGINEER		

U.S. DEPARTMENT OF ENERGY
Office of River Protection

LAWPS
JUMPER NOZZLE CONNECTION
1" PUREX KICKOFF ASSEMBLY

SIZE F | DRAWING NUMBER H-16-001926 | SHEET 1 | REV 0

SCALE NOTED

PLOTID

DOE_TB_F.DWG (8.0W 20-15)

DRAWING

H-16-001927

LAWPS JUMPER NOZZLE CONNECTION 3" PUREX KICKOFF ASSEMBLY

PARTS/MATERIAL LIST

QL	QTY	PART/DRAWING NUMBER	NOMENCLATURE/DESCRIPTION	MATERIAL/REFERENCE	SH	ITEM
3 FQA	1	H-2-90186-01	MALE, NOZZLE 3" PUREX	316/316L SST	1	1
CQA	1	N/A	PLATE, 11 OD X 3/8 THK	ASTM A240 304L SST	1	2

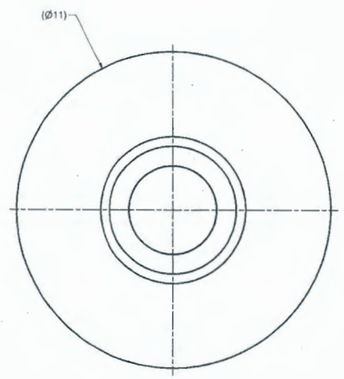

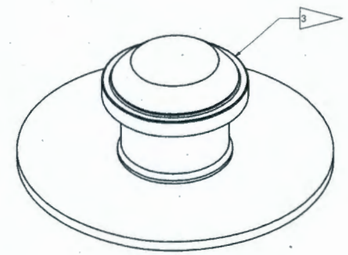

GENERAL NOTES:

1. DIMENSIONS AND TOLERANCES ARE IN ACCORDANCE WITH ASME Y14.5M-1994.
2. FABRICATION SHALL BE IN ACCORDANCE WITH CROSS SPECIFICATION LISTED IN TABLE 1.
3. PUREX NOZZLE TO BE PROVIDED BY BUYER.

TABLE 1		
NEXT USED ON	QTY	SPECIFICATION
H-16-001311-01	2	15-2-003

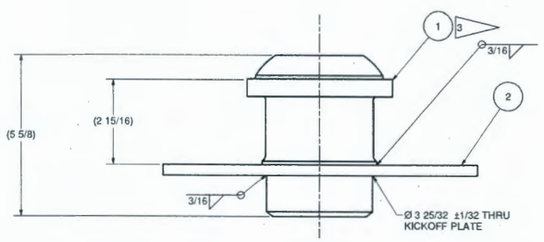

3" PUREX KICKOFF ASSEMBLY

SCALE 1 / 2

UNLESS OTHERWISE SPECIFIED

ALL DIMENSIONS ARE IN INCHES.
REMOVE BURRS & SHARP EDGES.

THIRD ANGLE PROJECTION

TOLERANCES
.X = ±.1
.XX = ±.01
.XXX = ±.005
X/XX = ± 1/16
ANGLE = ±.5 DEG
MACHINED SURFACES 125
MACHINED INSIDE
RADII = .04 ±.02

REVISION APPROVAL RECORD				REV 0	
DISCIPLINE	BY	DATE	DISCIPLINE	BY	DATE
ARCH.	SF	9/19/16	MECHANICAL	DS	9/19/16
BUILDING SERVICES	N/A	N/A	PIPING	MJ	9/19/16
CIVIL	SF	9/19/16	PROCESS	MW	9/19/16
ELECTRICAL	CF	9/19/16	QA / QC	PB	9/19/16
ENVIRON.	N/A	N/A	STRUCTURAL	SF	9/19/16
GEN. ARRANG.	DJ	9/19/16			
I & C	HF	9/19/16			
HVAC	WL	9/19/16			

DRAWING STATUS				
ISSUED	REV	DATE	SDE	PEM
APPROVED FOR BID	0	9/19/16	DS	BGA

NOT APPROVED FOR CONSTRUCTION UNLESS SIGNED AND DATED. DESTROY ALL PRINTS BEARING EARLIER DATE AND/OR REV.NO.

AECOM
URS ENERGY & CONSTRUCTION Inc. - an AECOM Company
ATKINS
AREVA

AECOM PROJECT NO.: 31269

DWG NUMBER	TITLE
DRAWING TRACEABILITY LIST	

REF NUMBER	TITLE
REFERENCES	
NEXT USED ON	SEE TABLE 1

APROVED FOR BID
NOT FOR CONSTRUCTION

REV	DESCRIPTION	ORG	CHK	APVD	IDV	DATE
0	APPROVED FOR BID	RC	DJ	DS	DKC	9/19/16

REVISIONS

BLDG. NO. 202LP

INDEX NO. 8405 8409

CAUTION
NOT COMPLETE WITHOUT CURRENT CHANGE DOCUMENTS FROM DATABASE

ATTENTION
DESTROY THIS DOCUMENT BY SHREDDING MAY CONTAIN SENSITIVE INFORMATION

NAME	DATE	COMPANY
DRAWN BY		
STRUCTURAL APPROVAL		
DESIGN LEAD ENGINEER		
ENGINEER		

U.S. DEPARTMENT OF ENERGY
Office of River Protection

LAWPS
JUMPER NOZZLE CONNECTION
3" PUREX KICKOFF ASSEMBLY

SIZE F | DRAWING NUMBER H-16-001927 | SHEET 1 | REV 0

SCALE NOTED

PLOTTED

DOC_FB_7_DWG (NOV 2010)

DRAWING

H-16-001928

LAWPS JUMPER LIFTING BAIL ASSEMBLY

PARTS/MATERIAL LIST

QL	QTY	PART/DRAWING NUMBER	NOMENCLATURE/DESCRIPTION	MATERIAL/REFERENCE	SH	ITEM
CQA	1	N/A	PIPE, 3/4 INCH SCHED 40S X 4 LG	ASTM A312 304L SST	1	1
CQA	3	N/A	BAR ROUND, 3/4 INCH X LAR	ASTM A276 304L SST	1	2

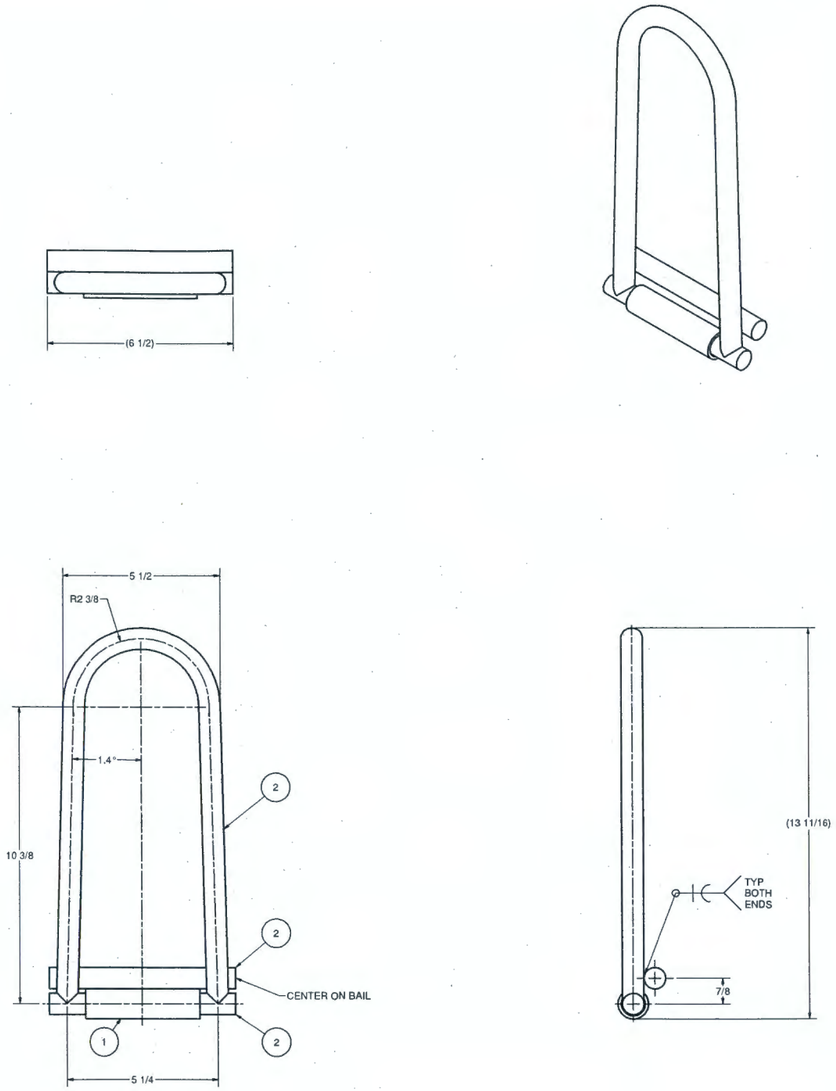

GENERAL NOTES:

1. DIMENSIONS AND TOLERANCES ARE IN ACCORDANCE WITH ASME Y14.5M-1994.
2. APPROXIMATE WEIGHT OF LIFTING BAIL IS 5.5 LBS.
3. FABRICATION SHALL BE IN ACCORDANCE WITH SPECIFICATION LISTED IN TABLE 1.

TABLE 1		
NEXT USED ON	QTY	SPECIFICATION
H-16-001216-01	3	15-2-001

JUMPER LIFTING BAIL ASSEMBLY

SCALE 1 / 2

UNLESS OTHERWISE SPECIFIED

ALL DIMENSIONS ARE IN INCHES.
REMOVE BURRS & SHARP EDGES.

THIRD ANGLE PROJECTION

TOLERANCES
.X = ±.1
.XX = ±.01
.XXX = ±.005
X/XX = ±1/16
ANGLE = ±.5 DEG
MACHINED SURFACES 125
MACHINED INSIDE RADII = .04 ±.02

REVISION APPROVAL RECORD				REV 0	
DISCIPLINE	BY	DATE	DISCIPLINE	BY	DATE
ARCH.	SF	9/19/16	MECHANICAL	DS	9/19/16
BUILDING SERVICES	N/A	N/A	PIPING	MJ	9/19/16
CIVIL	SF	9/19/16	PROCESS	MW	9/19/16
ELECTRICAL	CF	9/19/16	QA / QC	PB	9/19/16
ENVIRON.	N/A	N/A	STRUCTURAL	SF	9/19/16
GEN. ARRANG.	DJ	9/19/16			
I & C	HF	9/19/16			
HVAC	WL	9/19/16			

DRAWING STATUS				
ISSUED	REV	DATE	SDE	PEM
APPROVED FOR BID	0	9/19/16	DS	BGA

NOT APPROVED FOR CONSTRUCTION UNLESS SIGNED AND DATED. DESTROY ALL PRINTS BEARING EARLIER DATE AND/OR REV.NO.

AECOM
URS ENERGY & CONSTRUCTION Inc. - an AECOM Company
ATKINS
AREVA

AECOM PROJECT NO.: 31269

DWG NUMBER	TITLE
	DRAWING TRACEABILITY LIST

REF NUMBER	TITLE
NEXT USED ON	SEE TABLE 1

REFERENCES

APROVED FOR BID
NOT FOR CONSTRUCTION

REV	DESCRIPTION	ORG	CHK	APVD	IDV	DATE
0	APPROVED FOR BID	RC	DJ	DS	N/A	9/19/16

REVISIONS

BLDG. NO. 202LP

INDEX NO. 8405

CAUTION
NOT COMPLETE WITHOUT CURRENT CHANGE DOCUMENTS FROM DATABASE

ATTENTION
DESTROY THIS DOCUMENT BY SHREDDING MAY CONTAIN SENSITIVE INFORMATION

NAME	DATE	COMPANY
DRAWN BY		
CHECKING APPROVAL		
DISCIPLINE ENGINEER		
ENGINEER		

U.S. DEPARTMENT OF ENERGY
Office of River Protection

LAWPS
JUMPER LIFTING BAIL
ASSEMBLY

SIZE F | DRAWING NUMBER H-16-001928 | SHEET 1 | REV 0

SCALE NOTED

PLOTID

DOC_TB_7.DWG NOV 27/16