START

302
00042268

PNL-6894
UC-41

Procedures for Ground-Water Investigations

September 1989

Prepared for the U.S. Department of Energy
under Contract DE-AC06-76RLO 1830

Pacific Northwest Laboratory
Operated for the U.S. Department of Energy
by Battelle Memorial Institute

Battelle

PNL-6894

DISCLAIMER

This program was prepared as an account of work sponsored by an agency of the United States Government. Neither the United States Government nor any agency thereof, nor Battelle Memorial Institute, nor any or their employees, makes **any warranty, expressed or implied, or assumes any legal liability or responsibility for the accuracy, completeness, or usefulness of any information, apparatus, product, or process disclosed, or represents that its use would not infringe privately owned rights.** Reference herein to any specific commercial product, process, or service by trade name, trademark, manufacturer, or otherwise, does not necessarily constitute or imply its endorsement, recommendation, or favoring by the United States Government of any agency thereof, or Battelle Memorial Institute. The views and opinions of authors expressed herein do not necessarily state or reflect those of the United States Government or any agency thereof.

PACIFIC NORTHWEST LABORATORY
operated by
BATTELLE MEMORIAL INSTITUTE
for the
UNITED STATES DEPARTMENT OF ENERGY
under Contract DE-AC06-76RLO 1830

Printed in the United States of America

Available to DOE and DOE contractors from the
Office of Scientific and Technical Information, P.O. Box 62, Oak Ridge, TN 37831;
prices available from (615) 576-8401. FTS 626-8401.

Available to the public from the National Technical Information Service,
U.S. Department of Commerce, 5285 Port Royal Rd., Springfield, VA 22161.

NTIS Price Codes, Microfiche A01

Printed Copy

Pages	Price Codes
001-025	A02
026-050	A03
051-075	A04
076-100	A05
101-125	A06
126-150	A07
151-175	A08
176-200	A09
201-225	A10
226-250	A11
251-275	A12
276-300	A13

PNL-6894
UC-41

004268

PROCEDURES FOR GROUND-WATER INVESTIGATIONS

September 1989

Prepared for
the U.S. Department of Energy
under Contract DE-AC06-76RLO 1830

Pacific Northwest Laboratory
Richland, Washington 99352

OCT 1989
RECEIVED
EDMC

THIS PAGE INTENTIONALLY
LEFT BLANK

CONTENTS

INTRODUCTION 1

AD-1 CHANGE CONTROL PROCEDURE. 3

AD-2 GROUND-WATER SAMPLE CHAIN-OF-CUSTODY PROCEDURE. 7

AD-3 MODIFICATIONS TO FIELD SAMPLING PROGRAM 17

AD-4 SEDIMENT SAMPLE CHAIN-OF-CUSTODY. 21

DM-1 ANALYTICAL DATA HANDLING AND VERIFICATION PROCEDURE 27

DM-2 WATER LEVEL DATA HANDLING AND VERIFICATION PROCEDURE. 31

GC-1 GROUND-WATER SAMPLE COLLECTION PROCEDURE. 33

GC-2 IN-LINE SAMPLE FILTRATION PROCEDURE 53

GC-3 DISPOSAL OF PURGE WATER FROM MONITORING WELLS 57

GC-5 GEOCHEMICAL MONITORING OF WELL DEVELOPMENT. 59

FA-1 TEMPERATURE MEASUREMENT PROCEDURE 63

FA-2 CALIBRATION OF CONDUCTIVITY METER AND MEASUREMENT OF FIELD CONDUCTIVITY 67

FA-3 CALIBRATION OF pH METER AND MEASUREMENT OF FIELD pH 73

WL-1 WATER-LEVEL MEASUREMENT PROCEDURE 79

WL-2 PROCEDURE FOR STANDARDIZING STEEL TAPES 89

WL-3 INSTALLATION, OPERATION, AND REMOVAL OF THE INSTRUMENTATION NORTHWEST DATA LOGGER AND PRESSURE TRANSDUCER WITH AN IBM COMPATIBLE TERMINAL DEVICE. 95

WL-4 INSTALLATION, OPERATION, AND REMOVAL OF A DATA LOGGER AND PRESSURE TRANSDUCER 105

WL-5 PROCEDURE TO DETERMINE THE PRECISION OF ELECTRICAL WATER-LEVEL INDICATORS. 113

DO-1 COLLECTION AND DOCUMENTATION OF BOREHOLE SAMPLES AND WELL CONSTRUCTION DATA. 117

DO-2 SPLIT-BARREL AUGER SEDIMENT SAMPLING. 129

DO-3 DOCUMENTATION OF SAMPLING PUMP INSTALLATION 135

DO-4 CONTAMINATED SEDIMENT SAMPLING. 143

DA-1 SIMPLE DATA SUMMARIES 153

GL-1 GEOPHYSICAL WELL LOGGING VAN OPERATING PROCEDURE. 157

GL-2 TEMPERATURE PROBE PROCEDURE 163

GL-3 CALIPER PROBE PROCEDURE 167

GL-4 SONIC PROBE PROCEDURE 171

GL-5 NEUTRON PROBE PROCEDURE 177

GL-6 BULK DENSITY PROBE PROCEDURE. 181

GL-7 GAMMA RAY PROBE PROCEDURE 185

GL-7A GROSS GAMMA-RAY LOGGING PROCEDURE - Work Requests from Westinghouse Hanford Company 189

GL-8 SPONTANEOUS POTENTIAL-RESISTANCE PROBE PROCEDURE. 201

GL-9 FLUID RESISTIVITY PROBE PROCEDURE 207

GL-10 FLOWMETER PROBE PROCEDURE 211

GL-11 MAGNETIC PROBE PROCEDURE. 215

GL-12 DOWNHOLE TELEVISION SYSTEM OPERATING PROCEDURE. 219

GL-13 X-Y CALIPER PROBE PROCEDURE 223

GL-14 X-Y CALIPER PROBE PROCEDURE WITH BOREHOLE VOLUME COMPUTER. 227

GL-15 FLUID SAMPLER PROCEDURE 233

SA-1 SEDIMENT SAMPLE ANALYSIS/SAMPLE CONTROL PROCEDURE 237

SA-2 SIEVE PROCEDURE 239

AT-1 SETTING AND INSTRUMENTING THE TEST PUMP 243

AT-2 CONFIGURATION OF SURFACE FITTINGS AND MONITORING DEVICES FOR WELL DEVELOPMENT OR HYDROLOGIC TESTING. 249

AT-3 STARTING THE PUMP AND CLEARING THE BOREHOLE OF CONSTRUCTION FLUIDS 255

9 0 1 1 7 7 4 0 3 5 9

AT-4 WELL DEVELOPMENT BEFORE HYDROLOGIC TESTING. 263

AT-5 CONSTANT DISCHARGE TEST 271

AT-6 AQUIFER SLUG INJECTION AND WITHDRAWAL TEST. 285

9011774036 0

THIS PAGE INTENTIONALLY
LEFT BLANK

INTRODUCTION

This manual was developed by the Pacific Northwest Laboratory (PNL) to document the procedures used to carry out and control the technical aspects of ground-water investigations at the PNL. Ground-water investigations are carried out to fulfill the requirements for the U.S. Department of Energy (DOE) to meet the requirements of DOE Orders. Investigations are also performed for various clients to meet the requirements of the Resource Conservation and Recovery Act of 1976 (RCRA) and the Comprehensive Environmental Response, Compensation, and Liability Act of 1980 (CERCLA). National standards including procedures published by the American Society for Testing and Materials (ASTM) and the U.S. Geological Survey were utilized in developing the procedures contained in this manual.

MANUAL USE

Ground-Water Monitoring Procedures are developed and used in accordance with the PNL Quality Assurance Program. This program requires that the current version of the procedure is at or accessible to the location where the work is being performed during the conduct of the work. The procedure shall be identified as the workplace copy. Individuals performing the work are responsible for ensuring that they are working to the correct procedure revision and that data taken are traceable to the procedure.

The Document Control function of the PNL generally distributes procedure manuals and all changes to procedures to the company and its clients. However, to make this manual more publicly accessible, this special edition has been prepared. While the internal version of the manual must be updated whenever changes are warranted, this edition will only be updated yearly to include any changes made during that year. The September 1989 edition includes manual updates made before August 1, 1989.

9 0 1 1 7 7 4 0 3 6 1

REFERENCES

Comprehensive Environmental Response, Compensation, and Liability Act (CERCLA) of 1980. Public Law 96-510, as amended. 94 Stat 2767 (Title 26).

Resource Conservation and Recovery Act (RCRA) of 1976. 42 USC 6901 et seq., as amended.

9011774036 2

AD-1 CHANGE CONTROL PROCEDURE

1.0 APPLICABILITY

This procedure details the methods for initiating, processing, implementing, and recording changes to the functional characteristics of approved documents affecting design, fabrication, construction, installation, or testing.

All changes shall be traceable from the initial identification of the need for the change through the construction process and into the permanent as-built drawings and specifications. The changes must also be traceable into the schedule control documentation.

Authorized changes to approved documents shall be documented on a Design Field Change form (DFC) (Figure 1). The DFC form is to be used only for changes occurring during the construction phase.

2.0 DEFINITIONS

- DFC - Design Field Change
- PNL - Pacific Northwest Laboratory.

3.0 RESPONSIBLE STAFF

- PNL Site Geologist
- Project Manager.

4.0 PROCEDURE

4.1 Prerequisites

4.1.1 Equipment

- DFC form.

4.2 Step-by-Step Instructions

4.2.1 Initiating a Design Field Change

Position Responsible: PNL SITE GEOLOGIST OR PROJECT MANAGER

All DFCs shall be typed or completed in black indelible ink (including all approval signatures).

1. The Project Manager shall maintain the DFC Log for all DFCs associated with project-directed work. This log shall record a list of DFCs sequentially numbered by Project. Numbers are assigned on request.

9 0 1 1 7 7 4 0 3 6 3

DESIGN FIELD CHANGE		DFC No.
TASK NO.	PROJECT TITLE	FINAL APPROVAL DATE
DOCUMENTS AFFECTED		
DESCRIPTION OF CHANGE		DISTRIBUTION
JUSTIFICATION		
REMARKS		

INITIATOR/AUTHOR	PHONE	ORGANIZATION	DATE

APPROVALS	
PROJECT MANAGER	QAD REPRESENTATIVE

FIGURE 1. Example of a Design Field Change Form

9 0 1 1 7 7 4 0 3 6 4

The Project Manager shall review all approved DFCs for completeness (returning incomplete DFCs to the initiator for completion), verify that the distribution shown on the DFC form is complete and up to date, fill in the block with the latest approval date, and distribute the DFC form. The Project Manager shall retain the original in the appropriate Project File and log the final approval date in the DFC Log.

2. On determination of the requirement for a document revision, the person(s) requesting the change shall contact the Project Manager, or his designee, to explain and justify the change request. On concurrence of the Project Manager that a revision is required, a DFC shall be initiated. The DFC requester shall be given the responsibility of authoring the DFC.

3. The author shall list on the form a DFC number obtained from the Project DFC Log maintained by the Field Record custodian. The author shall write the project number and title on the DFC form.

4. The author shall list on the form all documents affected by implementation of the DFC, including drawings, Acceptance Test Procedures, specifications, and Nonconformance Reports.

5. The author shall enter a description of the change on the form. The description must contain sufficient detail to allow implementation of the change. Required sketches must be attached, with the DFC number and a place for review and approval on each sketch page. All pages (including attachment) shall be numbered sequentially (i.e., Page X of Y).

6. The author shall enter a clear and concise justification for the DFC.

7. The author shall review the change control form for completeness, sign the DFC form, and enter phone number, organization, and date.

8. The author shall enter under "Remarks" any data or references that, while not directly pertaining to the particular DFC, may clarify the DFC.

9. The author shall obtain the following signatures (as a minimum):

   - Project Manager (if not originator)
   - Quality Engineer
   - Senior Technical Reviewer.

   Other organizations may need to review/approve the DFC, and it shall be the responsibility of the DFC author and/or the Project Manager to assure that any other required signatures are obtained.

9 0 1 1 7 7 1 0 3 6 5

10. Approval of the Project Manager or a Senior Technical Reviewer may be obtained by telephone/radio. In such cases, the person obtaining the approval shall document the approval on the DFC and initial and date each approval received. The author shall arrange to obtain the signatures as soon as possible on the first normal day shift.

11. DFC numbers that are assigned but not approved and issued shall be voided on notification from the requesting individual or the Project Manager. The DFC Log shall be updated to show the void numbers. Numbers shall not be reassigned.

4.2.2 Revising Design Field Changes

Position Responsible: PNL SITE GEOLOGIST OR PROJECT MANAGER

Before final approval of a DFC form, revisions may be made through use of a single line strike out on the original (black indelible ink only). New information shall be entered, and the originator of the revision shall initial and date the change. If the change is of a technical nature, all approval signatures obtained before the revision must be initialed and dated by the approver(s) subsequent to the change. Changes having no impact on the technical aspects of the DFC shall be initialed and dated by the author of the change. Revisions to approved DFCs that have already been issued require initiation of a new DFC (with a new number).

AD-2 GROUND-WATER SAMPLE CHAIN-OF-CUSTODY PROCEDURE

1.0 APPLICABILITY

To ensure the integrity of ground-water samples from the time of collection through data reporting, the history of the custody of each sample will be documented according to this procedure. Anyone having custody of samples must comply with the procedure described below.

2.0 DEFINITIONS

- Custody - a sample is considered to be under a person's custody if it is in any of the following states: 1) in his physical possession; 2) in his view after he has taken possession; 3) secured by him so that no one can tamper with the sample; or 4) secured by him in an area that is restricted to authorized personnel

- RPT - Radiation Protection Technologist

- Sample Custodian - the person responsible for sample custody.

3.0 RESPONSIBLE STAFF

- Radiation Protection Technologist
- Technical Staff
- Sample Custodian
- Sample Recipient.

4.0 PROCEDURE

4.1 Prerequisites

4.1.1 Equipment

- appropriate sample containers
- sample labels
- sample seals
- Field Record Forms
- Chain-of-Custody Forms
- Sample Analysis Request Forms.

4.2 Step-by-Step Instructions

4.2.1 Sample Identification and Delivery

Position Responsible: RADIATION PROTECTION TECHNOLOGIST OR TECHNICAL STAFF (SAMPLE CUSTODIAN)

1. Record in permanent ink all pertinent information about each sample on a Chain-of-Custody Form. An example of the form to be used for samples collected for radionuclide analysis only is

9 0 1 1 7 7 4 0 3 6 7

shown in Figure 1. An example of the form to be used for samples collected for multiple chemical and radionuclide analyses is shown in Figure 2.

NOTE: A Chain-of-Custody Form will accompany all samples from the time they are collected until they are disposed of after analysis and reporting. A single form may be used for as many samples as possible.

2. Fill out and affix sample labels to the sample containers before or at the time of sample collection. Examples of the label to be used are shown in Figure 3.

3. Attach sample seals to the samples immediately on sample collection. Attach the seal in such a way that the sample cannot be opened without breaking the seal. This does not apply to radionuclide samples (Figure 1).

4. Record (in black ink) all pertinent information about each sample on a Ground-Water Sample Field Record Form. A sample of a Ground-Water Sample Field Record Form is shown in Figure 4.

5. Record all pertinent information about each sample on a Sample-Analysis Request (SAR) Form. An example of the form to be used is shown in Figure 5. This does not apply to radionuclide samples (Figure 1).

6. Deliver the samples to the analytical laboratory along with the Chain-of-Custody and Sample-Analysis Request Forms. Deliver samples only to authorized laboratory personnel.

   Samples are normally delivered directly to the laboratory on the day of collection. If they cannot be delivered on the day of collection, the Sample Custodian stores them in a locked building.

4.2.2 Transferring Custody of Samples.

Position Responsible: SAMPLE CUSTODIAN AND SAMPLE RECIPIENT

1. At the time the custody of the samples is transferred the Sample Custodian signs the Chain-of-Custody Form in the uppermost blank "Relinquished by" space. The signature is witnessed by the Sample Recipient.

2. The Sample Recipient signs the "Received by" space on the same line the Sample Custodian signed. The signature is witnessed by the Sample Custodian. Either the Sample Recipient or Sample Custodian records the date and time of the transfer.

   The Sample Recipient becomes the Sample Custodian on completion of this step in the procedure.

9011774036B

Battelle

CHAIN OF CUSTODY/FIELD RECORD SHEET (RADIONUCLIDES)

Company Contact: _____ Telephone: _____

Samples Collected By: _____ Date: _____ Time: _____

Sample Location: _____

Ice Chest No. _____ Method of Shipment: _____

Submersible (Time On) _____ Pumping Time: _____

Comments: _____

Sample No.	Volume	Comments

FIELD MEASUREMENTS

Steel Tape No. _____

(E – tape = _____)

WATER LEVEL

Hold			
Wet			
Level below T.C			

Time							
pH							
Temp							
Cond							

FIELD OBSERVATIONS _____

CHAIN OF POSSESSION

Relinquished by	Received by	Date/Time
Relinquished by	Received by	Date/Time
Relinquished by	Received by	Date/Time

BC-1200-356 (11/87)

FIGURE 1. Sample Chain-of-Custody Form, Radionuclides

Battelle
Pacific Northwest Laboratories
P.O. Box 999
Richland, Washington 99352

CHAIN OF CUSTODY

Company Contact: _____ Telephone: _____

Samples Collected by: _____ Date: _____ Time: _____

Sample Location: _____

Ice Chest No.: _____ Field Logbook Page No.: _____

Remarks: _____

Method of Shipment: _____

Sample Identification

CHAIN OF POSSESSION

Relinquished by:	Received by:	Date/Time:
Relinquished by:	Received by:	Date/Time:
Relinquished by:	Received by:	Date/Time:
Relinquished by:	Received by:	Date/Time

BC-1200-348 (7-86)

FIGURE 2. Sample Chain-of-Custody Form for Multiple Chemical and Radionuclide Analyses

GROUNDWATER
Sponsor:
Lab:
Sample Size:
Bottle:
Date/Time:
Collector:

T 2396-Ø 2-E25-25
GROUNDWATER 741 741
G Sponsor: B H37 FARSENI
Lab: H/IL H39 FSELENI
Sample Size: 1ØØØ ML H41 FLEAD
Ø7/Ø1/88 Bottle: PWC
Date/Time: 7/20/88
Collector: Andrew J Morton
*** Filter

T 1888 1-F8-1 111 BETA
GROUNDWATER 998 GAMMA
Sponsor: 121 SR 9Ø
Lab: M/LL 1Ø8 TRITIUM
Sample Size: 3ØØØ ML 1Ø4 U
Ø8/Ø1/88 M
Date/Time: 8/17/88
Collector: Andrew J Morton

FIGURE 3. Blank Sample Label and Two Examples of Completed Sample Labels. A description of each item on the sample label is contained in the procedure for ground-water sample collection (GC-1).

Battelle
Pacific Northwest Laboratories

GROUND-WATER SAMPLE FIELD RECORD

Well Number _____
Total Purge Volume (gal) _____
Purge Flow Rate (gal/min) _____
Hydrostar (Time On) _____
Submersible (Time On) _____
Bladder (Time On) _____

Date

Calculations

SAMPLES COLLECTED

SAMPLE NO	BOTTLE ID	PUMP	COLLECTOR
TOTAL NUMBER OF BOTTLES			

FIELD MEASUREMENTS

Previous pH _____
Steel Tape No _____
E - tape = _____
PH/Cond. No _____
Thermometer No _____

WATER LEVELS (ft)				Time							
Held				pH							
Cut				Temp (°C)							
Depth Below T C				Cond (µs/cm)							

FIELD OBSERVATIONS

Weather _____
General Problems/Unusual Events _____
Equipment Irregularities _____
Container Irregularities _____
Comments _____

Well capped and locked ☐ Yes ☐ No
Data Recorded By _____
Chain-Of-Custody Form No _____
PNL-MA-567 GC-1

Samples Surveyed for Gamma Radiation by RPT's _____
Data Checked By _____
Laboratory Record Book No. _____
Page No. _____

BC-1500-113 (03/89)

FIGURE 4. Example of a Ground-Water Sample Field Record Form

SAMPLE ANALYSIS REQUEST

from Battelle PNL

PROJECT GROUT
DATE
CHAIN OF CUSTODY #
EMA #

UNITED STATES TESTING
2800 GEORGE WASHINGTON WAY
RICHLAND, WA 99352
WATER___ SOIL___ OTHER___

ANA_1		109	H42	C09	726	741	A21	H38	742	H57	728	737	112	181	108	
ANA_2					A20	H37							111			
ANA_3					A22	H39										
ANA_4					A51	H41										
ANA_5																
BTL_S		120	250	250	1L	1L	500	500	125	2L	4L	4L	1L	1L	125	
BTL_T		P	GA/S	GA/S	PCW	PWC	GC	GC	P	GA	GA	GA	P BC	P BC	P BC	
N_BTL		2	2	1	1	1	1	1	1	1	1	1	1	1	1	
PRESE		--	H2SO	H3PO	HNO3	HNO3	HNO3	HNO3	--	--	--	--	HNO3	HNO3	--	
NOTES			NO H													
H00	TURBIDITY															
H17	TOTAL DISSOLVED SOLIDS															
109	COLIFORM BACTERIA	X														
207	pH (LAB)															
000	CONDUCTIVITY (LAB)															
H58	ALKALINITY															
H42	TOX LOWER DET LIMIT		XXXX													
C09	TOC			XXXX												
H16	TOTAL CARBON															
726	ICP METALS 6010 ENHANCED				X											
741	FILTERED ICP METALS ENHA					X										
A20	ARSENIC				X											
A21	MERCURY						X									
A22	SELENIUM				X											
A23	THALLIUM															
A51	LEAD BY GFAA				X											
H37	FILTERED ARSENIC					X										
H38	FILTERED MERCURY							X								
H39	FILTERED SELENIUM					X										
H40	FILTERED THALLIUM															
H41	FILTERED LEAD					X										
742	(COMBINATION OF 735, H66								X							
H65	NITRATE (HDL)															
H63	FLUORIDE (LDL)															
749	HALOGENTED VOLITILE ORGA															
730	VOA METHOD 8240															
731	VOA METHOD 8240 ENHANCED															
750	VOA METHOD 8240 ENHANCED															
749	VOA BY GC 8010															
732	A/B/N 8270															
733	A/B/N 8270 ENHANCED															
751	A/B/N 8270 ENHANCED															
H57	PHENOL									X						
728	PESTICIDES 8080										X					
729	PESTICIDES 8080 ENHANCED															
737	HERBICIDE 8150 ENHANCED											X				
A24	THIOUREA 8330															
727	METHOD 8330 ENHANCED (th															
734	PESTICIDES METHOD 8140 (															
736	DIRECT AQUEOUS INJECTION															
H62	HYDRAZINE (LDL)															
739	PCB															
752	TCDD, PCDDs, PCDFs															
C70	CYANIDE															
P09	FERROCYANIDE															
P10	OXALATE															
P11	CHROMIUM (VI)															
C77	PERCHLORATE															
C78	SULFIDE															
C80	AMMONIUM ION															
C81	ETHYLENE GLYCOL															
C87	CITRUS RED #2															
112	ALPHA												X			
111	BETA												X			
181	RADIUM													X		
184	URANIUM															
998	GAMMA															
121	SR-90															
108	3H														X	
197	TC99															
881	I 129 15 PCI/L															
281	I 129 (LDL) 1 PCI/L															
996	PU ISOTOPES															
105	AM															

FIGURE 5. Sample Analysis Request Form

NOTE: Sample collection is routinely accomplished by a team of two RPTs. Either one of the team members identified on the "Sample Collected by" space at the top of the Chain-of-Custody Form is a sample custodian and may sign the form when the sample is relinquished.

3. The new Sample Custodian examines the sample containers or ensures that the samples and sample seals are intact, the total number of bottles match the number on the Chain-of-Custody Form, and that the samples were in contact with the ice. If there is an observed problem with the samples, the new Sample Custodian records the condition of the samples in the remarks section of the Chain-of-Custody Form and notifies the Sample Analysis Task Leader of the problem.

4. The person relinquishing custody of the sample to the analytical laboratory returns the top or original copy of the form to the company contact whose name appears on the top line of the form. If the sample was collected by an RPT, the copy of the form is transmitted to the company contact through the RPT supervisor.

4.2.3 Disposal of Samples

Position Responsible: TECHNICAL STAFF

When all analyses for a sample have been completed, the laboratory continues to hold the samples in secure storage for 30 days. This allows time for reanalysis if requested. Information on the sample label may also be verified during this time. The laboratory notifies the contact person identified on the Chain-of-Custody Form when the sample holding time is completed. The requirement for notification of the contact person by letter is contained in the contract or letter of instruction to the laboratory.

When samples are disposed of by the analytical laboratory:

1. If the contract or letter of instruction for the analysis includes a provision for disposal of the samples, the contact person notifies the laboratory by letter that the samples may be destroyed or that an extended holding period is desired. When the samples are destroyed, a copy of the Chain-of-Custody Form is returned to the contact person by the analytical laboratory.

2. The contact person records the date of receipt of the Chain-of-Custody Form in the Chain-of-Possession section of the form.

3. Following completion of the chain of possession, the Chain-of-Custody Form is included in the files of the appropriate project.

When samples are disposed of by the Pacific Northwest Laboratory (PNL):

1. If the contract or letter of instruction does not contain provisions for the disposal of samples, samples are picked up at the

9011774037 4

laboratory by PNL personnel and disposed of in accordance with established shipping procedures. These procedures are under the direction of the Waste Management and Environmental Compliance Section, Laboratory Safety. The disposal procedure uses the Onsite Radioactive Shipment Record Form to document sample radioactivity.

2. Record the date samples are relinquished to PNL personnel in the Chain-of-Possession section of the Chain-of-Custody Form.

3. Following completion of the chain of possession, the Chain-of-Custody Form is included in the files of the appropriate project.

9 0 1 1 7 7 4 0 3 7 5

THIS PAGE INTENTIONALLY
LEFT BLANK

9 0 1 1 7 7 4 0 3 7 5

AD-3 MODIFICATIONS TO FIELD SAMPLING PROGRAM

1.0 APPLICABILITY

Modification of the field sampling program requires changes to the sampling schedule and data base, and notification of analytical subcontractors of the changes to be made. This procedure identifies who needs to be notified and what information each participant needs in order to add new wells to the sampling program or to add or delete constituents to be analyzed for at wells already on the schedule.

2.0 DEFINITIONS

N/A

3.0 RESPONSIBLE STAFF

- Project Manager
- Data Handling Task Leader
- Sample Analysis Task Leader
- Sample Collection Task Leader
- Sample Preparation Task Leader
- Radiation Protection Technologist (RPT) Supervisor.

4.0 PROCEDURE

4.1 Prerequisites

N/A

4.2 Step-by-Step Instructions

4.2.1 Identifying Changes to Be Made

Position Responsible: PROJECT MANAGER

NOTE: The project manager should initiate the process of modifying the sampling program at least 6 weeks before the changes are required to go into effect.

1. Determine the sampling interval desired (e.g., monthly, quarterly, semiannually, or annually).

2. Determine the analyses to be performed on samples collected from the added wells.

3. Provide surveyed well locations and the list of analyses to be performed to the Data Handling Task Leader.

9011774037

4. Provide the list of wells to be sampled, intended sampling period, and work package number for sample collection to Sample Collection Task Leader. Notify the Sample Collection Task Leader when the changes are to be initiated.

5. Provide list of analyses required on samples from new wells or changes to list of analyses required from old wells to Sample Analysis Task Leader. Also identify the project and indicate the work package number to be charged so that an account can be set up with the analytical subcontractor.

6. Notifications in steps 3 to 5 should be in writing, with copies maintained by the Project Manager.

4.2.2 Obtaining Formal Identification for Wells and Analyses to Be Added

Position Responsible: DATA HANDLING TASK LEADER

1. Obtain formal well names if new wells are involved.

2. Provide well codes and well names to Sample Analysis Task Leader and Project Manager.

3. Generate labels for sample bottles for the analyses requested.

4. Give the labels to the Sample Preparation Task Leader.

5. Update the sample schedule in the data base from information provided by Sample Analysis Task Leader.

4.2.3 Notifying an Analytical Subcontractor of Changes to the Sampling Programs

Position Responsible: SAMPLE ANALYSIS TASK LEADER

1. Set up an account with the analytical subcontractor to cover the cost of additional analyses.

2. Provide the list of analyses to be performed and the related analytical subcontractor constituent code for each well to the Data Handling Task Leader.

3. Provide a list of the sample bottles that will be required to collect the requested samples to the Sample Preparation Task Leader.

9 0 1 1 7 7 4 0 3 7 8

4.2.4 Coordinating Sample Collection with RPT Supervisor

Position Responsible: SAMPLE COLLECTION TASK LEADER

1. Inform the RPT Supervisor of the additional wells to be sampled and the intended sampling period as soon as information is available from the Project Manager.

2. Inform the Project Manager when all preparations for collecting samples from the new wells are complete.

3. With approval of the Project Manager, inform the RPT Supervisor that the well is ready to be incorporated into the sampling plan and sampled.

4.2.5 Preparing Containers for Sample Collection

Position Responsible: SAMPLE PREPARATION TASK LEADER

1. Order sample containers after being informed by the Sample Analysis Task Leader of the appropriate size, type, and quantity needed.

2. Label and prepare the sample containers for sample collection.

3. Inform the Sample Collection Task Leader when sample container preparation is complete. Indicate where the containers are stored.

4.2.6 Scheduling Sample Collection

Position Responsible: RPT SUPERVISOR

1. Schedule new wells to be sampled by RPTs.

THIS PAGE INTENTIONALLY
LEFT BLANK

09/417,030

AD-4 SEDIMENT SAMPLE CHAIN-OF-CUSTODY

1.0 APPLICABILITY

This procedure details the methods for establishing the traceability of sediment samples that will undergo hazardous chemical and radionuclide analysis. This process ensures the integrity of the sediment samples from the time of collection through sample disposal. The sequential custody of sediment samples will be documented using this procedure. Each custodian of the samples shall comply with the procedures described below. The applicability of sediment samples requiring this chain-of-custody procedure shall be identified in the appropriate sediment sampling and analysis plans. See also procedure DO-3, Contaminated Sediment Sampling.

2.0 DEFINITIONS

- Custody - custody of a sample requires control of the sample in one or more of the following manners: 1) physical possession, 2) in his/her view after taking possession, 3) secured by him/her in a manner that prevents tampering of sample, and/or 4) secured by him/her in an area restricted to authorized personnel.

- Sample Custodian - responsible person in custody of sample.

3.0 RESPONSIBLE STAFF

- technical staff in charge of sediment sampling
- technical staff in charge of analysis
- Sample Custodian
- Sample Recipient
- Company Contact
- Project Manager.

4.0 PROCEDURE

4.1 Prerequisites

4.1.1 Equipment

- permanent ink markers
- appropriate sample containers
- sample labels
- sample seals
- Chain-of-Custody Forms
- Drill Log Forms
- applicable Sampling and Analysis Plan
- applicable Health and Safety Plan.

4.1.2 Safety Precautions

Sediment samples may pose a hazard to the responsible staff; therefore, the applicable safety precautions outlined in the Health and Safety Plan shall be adhered to.

4.2 Step-by-Step Instructions

4.2.1 Sample Identification and Delivery

Position Responsible: TECHNICAL STAFF IN CHARGE OF SEDIMENT SAMPLING

1. Record in permanent ink all pertinent information about each sample on a Chain-of-Custody Form. Multiple samples collected on the same date may be recorded on one Chain-of-Custody Form provided each sample is identified individually on the form. Record the procedure and revision number in the remarks section. (An example of a Chain-of-Custody Form is shown in Figure 1).

2. Record date, time, depth, location, type of sample, sample size, preservation method (if applicable), and other pertinent information on the Drill Log. (An example of a Drill Log form is shown in Figure 2.)

3. Fill out and affix sample labels to the sample containers before or at the time of sample collection. Sample label will identify the time, date, depth, location presevation method, constituents to be analyzed for, and name of sample collector.

4. Attach sample seals to the samples immediately on sample collection. Attach the seal in a way that the sample cannot be reached without breaking the seal.

5. Deliver the samples to the analytical laboratory and transfer custody of the samples to authorized laboratory personnel.

NOTE: If custody of the sediment samples cannot be transferred to the authorized laboratory personnel on the same day of sample collection, the samples must be stored in a locked and secure building until a transfer can be made.

4.2.2 Transferring Custody of Samples

Positions Responsible: SAMPLE CUSTODIAN AND SAMPLE RECIPIENT

1. The SAMPLE CUSTODIAN and the SAMPLE RECIPIENT shall examine the container to ensure the sample seals are intact and the sample containers have not been damaged. If any seals have been broken and/or the sample containers are damaged, the SAMPLE RECIPIENT records the condition of the seals and containers in the remarks section of the Chain-of-Custody Form.

9 0 1 1 7 7 4 0 3 8 2

Battelle
Pacific Northwest Laboratories
P.O. Box 999
Richland, Washington 99352

CHAIN OF CUSTODY

Company Contact: _____ Telephone: _____

Samples Collected by: _____ Date: _____ Time: _____

Sample Location: _____

Ice Chest No.: _____ Field Logbook Page No.: _____

Remarks: _____

Method of Shipment: _____

Sample Identification

CHAIN OF POSSESSION

Relinquished by:	Received by:	Date/Time:
Relinquished by:	Received by:	Date/Time:
Relinquished by:	Received by:	Date/Time:
Relinquished by:	Received by:	Date/Time

BC-1200-345 (7-85)

FIGURE 1. Chain-of-Custody Form

9 0 1 1 7 7 4 0 3 8 3

DRILL LOG	By	Rig	Well Number	Computer Number	Project or Work Order No.
	Date		Depth To		Subcontract No.

Total Casing	Depth	Drill Method	Wet/Dry Sample	LITHOLOGIC DESCRIPTION % Each Grain Size, Color, Roundness, Caliche, Etc.	Time	Drilling Comments

REMARKS:

FIGURE 2. Drill Log Form

2. The SAMPLE CUSTODIAN signs the Chain-of-Custody Form in the uppermost blank "Relinquished by" space.

3. The SAMPLE RECIPIENT signs and records the date and time in the "Received by" space next to the Sample Custodian's signature. The Sample Recipient now becomes the Sample Custodian completing the transfer of sample possession.

4. The SAMPLE CUSTODIAN relinquishing custody of the sample to the analytical laboratory returns the top or original copy of the form to the Company Contact, whose name appears on the top line of the form.

4.2.3 Disposal of Samples

Positions Responsible: COMPANY CONTACT, SAMPLE CUSTODIAN, SAMPLE RECIPIENT, AND PROJECT MANAGER

Samples are to be maintained for 30 days in secure storage after sample analyses are complete. This allows for re-analysis if requested. The laboratory or responsible technical staff in custody of the samples will notify the contact person identified on the Chain-of-Custody Form when the holding time is complete.

When samples are disposed of by the analytical laboratory:

1. If the contract or letter of instruction includes a provision for disposal of the samples by the analytical laboratory, the COMPANY CONTACT will notify the laboratory that the samples may be destroyed, or that an extended period of storage is required.

2. After destruction of samples, the analytical laboratory returns a copy of the Chain-of-Custody Form to the COMPANY CONTACT.

3. The COMPANY CONTACT records the date of receipt on the Chain-of-Custody Form in the "Received by" section of the form space and indicates the samples were destroyed ending the chain of possession.

4. The Chain-of-Custody Form is then filed in the appropriate project files.

When samples are disposed of by the Pacific Northwest Laboratory (PNL):

1. If the contract or letter of instruction does not contain provisions for the disposal of samples, PNL personnel will obtain custody of the samples from the analytical laboratory and will dispose of the samples in accordance with hazardous material shipping procedures.

9 0 1 1 7 7 4 0 3 8 5

2. After destruction of samples, PNL personnel responsible for sample destruction return a copy of the Chain-of-Custody Form to the COMPANY CONTACT.

3. The COMPANY CONTACT records the data of receipt of the Chain-of-Custody Form in the "Received by" space next to the Sample Custodian's signature and indicates the samples were destroyed ending the chain of possession.

4. The PROJECT MANAGER shall ensure that Chain-of-Custody Form is then filed in the appropriate project files.

9 8 3 0 4 7 1 1 0 6

DM-1 ANALYTICAL DATA HANDLING AND VERIFICATION PROCEDURE

1.0 APPLICABILITY

This procedure establishes a standardized method for the receipt, entry into the PNL data base (HGWDB) and verification of analytical data from United States Testing (UST), the primary analytical laboratory. Data are received from UST in both magnetic media and hard copy form. This procedure also covers data entered into the HGWDB by running an interactive program.

2.0 DEFINITIONS

- HGWDB - the Hanford Ground-Water Data Base.

3.0 RESPONSIBLE STAFF

- Data Handling Task Leader
- Sample Analysis Task Leader
- Technical Staff.

4.0 PROCEDURE

4.1 Prerequisites

4.1.1 Equipment

The following will be needed when entering and verifying data received on magnetic tape from UST:

- data tape
- data tape listing
- laboratory data sheets
- access to HGWDB project on PNL ZVAX computer
- HGWDB Input File Logbook
- copy of HGWDB User Guide and Maintenance Manual.

The following will be needed when loading and verifying data entered into the data base interactively:

- laboratory data sheets or Field Record Forms
- access to HGWDB project on PNL ZVAX computer
- copy of HGWDB User Guide and Maintenance Manual.

4.1.2 Background Information

Magnetic tapes, two types of data listings, and raw data sheets from UST are delivered to PNL by UST personnel. One of the listings is a summary report, which is used for data review. The other listing is an image of the file as it appears on magnetic tape, which is used for verification of the contents of the tape.

9 0 1 1 7 7 4 0 3 8 7

The summary report is reviewed by the Sample Analysis Task Leader for results that are greater than detection limits, blanks that have values above detection limits, or any suspect results. All discrepancies, anomalies, or unusual data shall be investigated, and the resolutions documented.

The data file is copied from UST's magnetic tape to the disk on the ZVAX computer. A preliminary check is done to see that the number of records and the report date are the same as those on the UST tape.

Two programs are run to check the input file and read it into the data base:

> The UPDRES (update results) program is used to process the file of UST data into the HGWDB. The program reads the file, checks the file for format errors, and generates a report that lists rejected data. Examples of circumstances that cause rejection of data include improper well or constituent codes, no sample date associated with the analysis value, or receipt of internal UST QC data which is not intended to be included in the PNL data base. The output from the UPDRES program is reviewed by technical staff, and any unexplained rejects are investigated.
>
> The ANATREND (analytical trend) program reads the file generated by UPDRES, does trend checking, and generates a report of results that have been stored in the data base. The trend checking program flags values that are outside 2.09 times the standard deviation of the linear regression curve for each sampling point.
>
> The report generated by ANATREND is used to verify values recorded in the data base against the raw data sheets from UST by a designee of the Sample Analysis Task Leader. This is accomplished by following methods described in American National Standard ANSI/ASQC Z1.4-1981 "Sampling Procedures and Tables for Inspection by Attributes" at an Acceptable Quality Level (AQL) of 1%. Pertinent information from Tables I and IIA from this document are included in Table 1 of this procedure.

4.2 Step-by-Step Instructions

4.2.1 Entering and Verifying Magnetic Tape (Batch) Data

Position Responsible: TECHNICAL STAFF

1. Copy data from tape to a file on the ZVAX. (See Appendix E of HGWDB User Guide and Maintenance Manual.)

2. Change the ANABATCH.COM command file in the HGWDB directory on the ZVAX to show the correct input file name.

3. Submit the ANABATCH.COM file to be processed. (See Sections 3.2.8 and 3.2.9 of HGWDB User Guide and Maintenance Manual.)

9011174038

TABLE 1. Sampling Plans for Normal Inspection

Lot or Batch Size	Sample Size	Error Acceptance Level	Error Rejection Level
2 - 150	13	0	1
151 - 500	32	1	2
501 - 1,200	80	2	3
1,201 - 3,200	125	3	4
3,200 - 10,000	200	5	6
10,001 - 35,000	315	7	8

Extracted from ANSI/ASQC Z1.4-81, Tables I and II-A

4. Review the UPDRESERR.SAV file (created in the HGWDB directory during processing) for rejected records. Modify and resubmit records that were incorrectly rejected.

5. Determine the number of records that were entered into the data base from the UST data tape. This number is printed at the end of the ANADAT.RPT file (created in the HGWDB directory during processing). This is the Lot or Batch Size.

6. Determine the Sample Size from Table 1 for the Lot or Batch Size.

7. Determine the sampling interval (SI) as the whole number portion of (Lot or Batch Size) Sample Size.

8. Mark every record that corresponds to the SI on a printout of the ANADAT.RPT file. For example, if the SI is 4, mark every fourth record.

9. Check every record marked in step 8 against its laboratory data sheet value and initial each value checked on a printout of ANADAT.RPT.

10. Count the number of checked records that are incorrect in the data base.

11. Determine the Acceptance and Rejection numbers from Table 1 for the Sample Size that has been used.

12. If the number of nonconformances is less than or equal to the Acceptance number, sign and date the ANADAT.RPT listing as accepted and enter the initials of the verifier into the data base for each record from that tape.

9 0 1 1 7 7 4 0 3 8 9

13. If the number of errors is greater than or equal to the Rejection number, verify every number in the ANADAT.RPT listing and report the results to the Statistical and Qualitative Data Evaluation Task Leader for further action as outlined in ANSI/ASQC Z1.4-1981.

14. If discrepancies or errors are discovered, bring them to the attention of the Sample Analysis or Data Handling Task Leader (or designee), who shall determine any corrective action. If data are changed in the data base, the new results are automatically included in subsequent ANATREND runs. The most recent value that was changed remains stored in the file in a separate location.

4.2.2 Entering and Verifying Data Entered Interactively

Position Responsible: TECHNICAL STAFF

1. Enter data from laboratory data sheets or Field Record Forms into the data base by running the ANADAT program. (See Section 3.2.3 of HGWDB User Guide and Maintenance Manual.)

2. Check every record against its laboratory data sheet or Field Record Form value and initial each value checked on a printout of ANADAT.RPT. When all records are checked, sign and date the printout.

3. Correct any input errors by running the ANADAT program again and repeat Step 2.

DM-2 WATER LEVEL DATA HANDLING AND VERIFICATION PROCEDURE

1.0 APPLICABILITY

This procedure establishes a standardized method for the entry into the PNL data base (HGWDB) and verification of water level data. Data can be entered interactively or in batch mode (as in the case of data downloaded from a personal computer).

2.0 DEFINITIONS

- HGWDB - the Hanford Ground-Water Data Base.
- PC - personal computer.

3.0 RESPONSIBLE STAFF

- Technical Staff.

4.0 PROCEDURE

4.1 Prerequisites

4.1.1 Equipment

The following will be needed when entering and verifying water level data entered into the data base:

- copies of field logbook(s)
- access to HGWDB project on PNL ZVAX computer
- copy of HGWDB User Guide and Maintenance Manual.

4.2 Step-by-Step Instructions

4.2.1 Entering and Verifying Data Entered Interactively

Position Responsible: TECHNICAL STAFF

1. Enter water level data from copies of field logbook(s) into the data base by running the HYDDAT program. (See Section 2.2.1 of HGWDB User Guide and Maintenance Manual.)

2. Check each water level value against its field logbook value and initial each value checked on a printout of HYDDAT.RPT (created during data entry). When all records are checked, sign and date the printout.

3. Correct any input errors by running the HYDDAT program again and repeat Step 2.

4.2.2 Entering and Verifying Batch Data

Position Responsible: TECHNICAL STAFF

1. Load the file containing the water level data into the data base by running the HYDLOAD program. (See Section 2.2.3 of HGWDB User Guide and Maintenance Manual.) If data are downloaded from a PC, the file must first be put into the format required by the HYDLOAD program.

2. See Steps 2 to 3 of Section 4.2.1 of this procedure.

GC-1 GROUND-WATER SAMPLE COLLECTION PROCEDURE

1.0 APPLICABILITY

These procedures are intended for use during collection of ground-water samples that will be analyzed for hazardous chemicals.

2.0 DEFINITIONS

N/A

3.0 RESPONSIBLE STAFF

- Radiation Protection Technologists.

4.0 PROCEDURE

4.1 Prerequisites

NOTE: Some equipment may not be available in all sampling vehicles. Review the Hanford Well Fact Book to determine what equipment will be required to sample the assigned well(s). Select a sample vehicle suitably equipped to sample the assigned wells.

4.1.1 Equipment

- low-submergence adapter for bladder pump
- small vacuum pump (needed for the low submergence adapter)
- truck-mounted air compressor (equipped with dryer and lubricator) and generator
- bladder-pump controller box
- bladder-pump hoses (set of 2)
- extra discharge line for bladder pump
- HydroStar pneumatic cylinder
- HydroStar purge hose (black)
- HydroStar sampling hose (Teflon)
- extra discharge line for submersible pump
- stainless steel sampling manifold
- 2 Teflon bailers

- 2 pH and conductivity meters
- 2 digital thermometers
- 2 steel measuring tapes and 2 E-tapes
- carpenter's chalk
- large plastic bags
- engineer's measuring tape
- "Hanford Well Fact Book"
- stopwatch or watch with second hand
- bucket (for measuring flow rate)
- distilled water
- ziplock bags
- ice chests with ice
- plastic gloves
- disposable surgical gloves
- aprons
- towels
- extra sample labels
- sample seals
- copies of relevant procedures
- sample containers with caps and liners (including extras)
- box of extra bottles
- Field Record Forms (Figure 1)
- Chain-of-Custody Forms
- rubber gauntlet gloves

Battelle
Pacific Northwest Laboratories

GROUND-WATER SAMPLE FIELD RECORD

Well Number _____
Total Purge Volume (gal) _____
Purge Flow Rate (gal/min) _____
Hydrostar (Time On) _____
Submersible (Time On) _____
Bladder (Time On) _____

Date

Calculations

SAMPLES COLLECTED

SAMPLE NO.	BOTTLE ID	PUMP	COLLECTOR

TOTAL NUMBER OF BOTTLES _____

FIELD MEASUREMENTS

Previous pH _____
Steel Tape No _____
E - tape = _____
PH/Cond. No _____
Thermometer No _____

WATER LEVELS (ft)				Time							
Held				pH							
Cut				Temp (°C)							
Depth Below T.C.				Cond (µs/cm)							

FIELD OBSERVATIONS

Weather _____
General Problems/Unusual Events _____
Equipment Irregularities _____
Container Irregularities _____
Comments _____

Well capped and locked ☐ Yes ☐ No
Data Recorded By _____
Chain-Of-Custody Form No. _____
PNL-MA-567 GC-1

Samples Surveyed for Gamma Radiation by RPT's _____
Data Checked By _____
Laboratory Record Book No. _____
Page No. _____

BC-1500-113 (03/89)

FIGURE 1. Field Record Form

- Radiation Work Protection clothes
- radiation detection instruments
- waterproof markers and black pens
- masking tape.

NOTE: Duplicate equipment may be temporarily stored at a readily available location if vehicle space is limited.

4.1.2 General Preparation

Test field equipment (pH/conductivity meter, temperature probe) before leaving for the field. Load the truck in a secure and safe manner with the necessary supplies.

When the well is reached, park the truck near the well (and downwind) for convenience and safe operation of sampling equipment.

4.1.3 Sampling Precautions

Do not smoke, drink, or eat during sampling, and avoid handling any objects not necessary for performing sampling procedures.

Park downwind of the well being sampled.

Do not sample downwind from sources of volatile organics (e.g., car or generator exhausts, open fuel tanks). These could contaminate the sample. If any such sources are unavoidable, make a note of them on the Field Record Forms.

Leave caps on the sample containers until just before filling. Figure 2 illustrates typical sample labels and provides an explanation key.

Avoid handling the Teflon bottle cap liners. Do not use any liner that falls out of the cap and onto the ground.

Wear surgical Latex or rubber gloves when taking samples and when handling containers, especially those with added preservative.

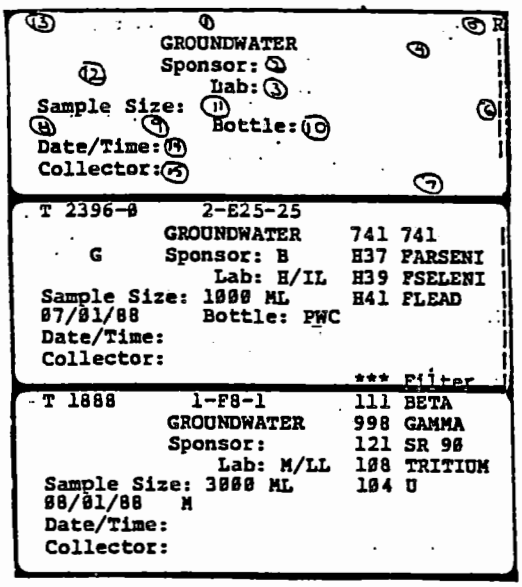

GROUND-WATER SAMPLE LABEL KEY

The following information is printed on the label by the computer program that creates the label from the sampling schedule:

1. Well Name (e.g., 299-E25-25).
2. The sponsor code - indicates which program is charged for collection of the sample and the analyses.
3. The lab code - indicates which laboratory the sample is sent to for analysis.
4. The analyses to be performed on the sample by the analytical laboratory.
5. "R" - indicates that replicate samples are to be collected.
6. Vertical line down the side of the label - indicates a bladder pump is to be used to collect the sample (if available).
7. "Filter" - indicates sample should be filtered.
8. The initial date for the sampling period.
9. The sampling frequency (e.g., M for monthly, Q for quarterly).
10. The type of bottle to be used (e.g., PWC - a plastic bottle with a white cap).
11. Sample Size (e.g., 150 milliliters, 1000 milliliters).
12. Special sample handling requirements -indicated by a letter code in this region of the label. The letter code indicates that a colored dot should be placed here for easy recognition by personnel preparing the bottles and collecting samples. For example, a "G" represents a green dot indicating that nitric acid is added to the bottle as a sample preservative.
13. Additional information about the sample collection. The 4-digit number is the well code and is used by the laboratory to simplify data reporting. A "-0" or "-1" following the well code indicates that more than one sample is to be analyzed for the same constituent (e.g., the first sample would be designated "-0," the second sample "-1," etc.). A "T" indicates that the purge water from the well should be discharged into a holding tank or barrel and not on the ground.

The following information is written on the label by the field sampling personnel at the time the sample is collected:

14. The date and time of sample collection.
15. The names of the sample collection personnel.

FIGURE 2. Typical Sample Label

4.2 Step-by-Step Instructions

4.2.1 General Sample Collection Procedure

Position Responsible: RADIATION PROTECTION TECHNOLOGISTS

The following steps should be taken when collecting any ground-water sample:

1. Select the appropriate sampling method by

   a. determining whether the borehole to be sampled is a well or a piezometer (by comparing diameter).

   b. determining which pump is in the well, if any [submersible pump, bladder pump, HydroStar pump, or no pump (requires use of a bailer)]. This information can be found in the Hanford Well Fact Book. The procedure to follow for each of these methods can be found in subsections 4.2.2 through 4.2.7 below. Follow those procedures first, then continue with step 2 of this procedure.

2. Unscrew the cap from the sample container, being careful not to touch the lip of the bottle or the inside of the Teflon liner. Also avoid touching the mouth of the discharge line. Reduce flow rate when filling bottles with septum tops to less than 1 liter/minute. Measure the flow rate before sampling.

NOTE: Start by filling all sample bottles with septum tops.

3. Fill the sample bottle slowly by placing the outlet tube against the inner side of the sample bottle to prevent trapping any air bubbles. Avoid splashing or agitating the water while the bottle is being filled.

NOTE: For those bottles requiring zero headspace (those having a septum lid), the bottle should be filled completely so that a meniscus forms over the mouth. Cap the bottle immediately, turn it upside down, tap it a few times and check for air bubbles in the sample. If a bubble exists, top off the sample until a bubble-free sample is obtained. On all other sample containers, fill the bottles as much as possible and do not be concerned about bubbles. Note: if the bottle to be filled contains a preservative, only one attempt should be made to obtain a bubble-free sample.

4. As each container is filled, attach a sample custody seal across the bottle top.

5. Survey the sample container with a radiation detection instrument. If the count is greater than 200 c/m, record it on the Field Record Form and use established radiation work procedures. Contact the Environmental Monitoring Supervisor for instructions concerning where the sample is to be taken.

9 0 1 1 7 7 4 0 3 9 8

6. Place the container in a cooler or ice chest. Be sure ice is distributed evenly in ice chest so all samples are in physical contact with ice.

7. Place all nondedicated sampling equipment (e.g., manifolds) that comes in contact with the well water in a plastic bag until the next use.

8. If you have been using an air compressor, turn it off.

9. If you have been using a generator, turn the power switch off and then turn the generator off. Unplug the power cord.

10. Complete the Chain-of-Custody and Field Record Forms (see Procedure AD-2).

11. Place the samples in a secure location during transportation.

12. Deliver the sample to the appropriate laboratory for analysis as soon as possible, following Chain-of-Custody Procedures (see Procedure AD-2 and Figure 3), and have the person receiving the sample sign the Chain-of-Custody Form. If it cannot be delivered to the lab the same day, store the sample in a refrigerator located inside a locked building or within a secured area. The refrigerator must maintain a constant temperature of 4°C (39°F). Leave the ice chest so that it can be used to transport samples to the analytical laboratory.

NOTE: Do not freeze sample bottles!!

4.2.2 Sample Collection Using the Submersible Pump

Position Responsible: RADIATION PROTECTION TECHNOLOGISTS

Take the following steps to collect a sample from a well that contains a submersible pump.

1. Take water-level measurements according to Procedure WL-1.

2. Check to see that the hose bibb for the submersible pump is open. Place the stainless steel sampling manifold on hose bibb or pump outlet. Be sure a valve is open to allow free flowing water.

3. Plug the power cord into one of the 230-V outlets on the generator on the truck and into the outlet at the well head.

4. Start the electric generator.

Battelle
Pacific Northwest Laboratories
P.O. Box 999
Richland, Washington 99352

CHAIN OF CUSTODY

Company Contact: _____ Telephone: _____

Samples Collected by: _____ Date: _____ Time: _____

Sample Location: _____

Ice Chest No.: _____ Field Logbook Page No.: _____

Remarks: _____

Method of Shipment: _____

Sample Identification

CHAIN OF POSSESSION

Relinquished by:	Received by:	Date/Time:
Relinquished by:	Received by:	Date/Time:
Relinquished by:	Received by:	Date/Time:
Relinquished by:	Received by:	Date/Time

BC-1200-345 (7-85)

FIGURE 3. Chain-of-Custody Form

5. Turn the power switch on to begin the pumping process. Do not handle energized power cords. If the pump does not work properly, as indicated by a lack of air flow out the discharge hose or by generator "lug" down, turn the switch off immediately. Wait a few seconds, then turn the switch on and off several times rapidly, finally pausing in the ON position to determine if the pump has started to function properly. Repeat this several times. If the sample pump still doesn't work, it needs repair. If the breakers or fuses on the generator disengage, an electrical short in the system is indicated and repair is needed. Record problems on the Field Record Form and Problem Identification Report.

6. After the water begins to flow from the outlet, pump the well for the length of time indicated on the Field Record Form, and until pH, temperature, and specific conductivity stabilize (see Procedures FA-1, FA-2, and FA-3). If the well being sampled does not have a purge volume or purge time listed on the Field Record Form, pump for a minimum of 20 minutes and check for stabilization of the pH, temperature, and specific conductivity.

   To regulate the water-flow rate during sample collection, adjust the throttle control valve to obtain the desired flow rate.

NOTE: Specific well information is contained in the "Hanford Well Fact Book," which is updated quarterly. If the well pumps dry while purging, it does not generally mean that a sample cannot be collected. A sample can still be obtained by following these steps:

a. When the well pumps dry, turn off the submersible pump.

b. Wait for the well to recharge. This should be about 15 minutes, but may take as long as 30 minutes.

c. Turn the submersible pump back on. If air cannot be felt coming out of the pipe or water does not appear after a few minutes, turn pump off and wait 30 minutes and repeat procedure. If water fails to appear, report the problem on the Field Record Sheet and Problem Identification Report and discontinue sampling effort at that well.

d. Collect the samples that are designated for collection with the submersible pump. Collect samples with septum tops first.

NOTE: Pumping times (shown on Field Record Form) are usually based on voiding three bore-volumes of water from the well at a pumping rate of 10 gpm. To calculate an adjusted pumping time based on a field measurement of flow rate:

a. Divide the size of the container (in gal) by the number of seconds it took to fill. Multiply by 60 to get the new pumping rate (per minute).

9011774040 1

b. Divide the purge volume given on the Field Record Form by the new pumping rate to determine the new pumping time.

7. Measure the pH, temperature, and specific conductivity of the discharged water at least <u>three</u> times (beginning, middle, and end of the designated purge time) during purging, according to the standard procedures for measuring pH and conductivity (FA-2 and FA-3). The pH will be considered stable when two consecutive measurements agree within 0.1 pH units. Temperature will be considered stable when two consecutive measurements agree within 1.0°C. Conductivity will be considered stable when two consecutive measurements agree within 10% of each other. If pH, temperature, and conductivity do not stabilize within the listed purging time. Repeat the measurements. If necessary, repeat a maximum of four times. If the parameters fail to stabilize, collect sample and note problem on Field Record Form.

NOTE: If requested on the Field Record Sheet, collect four replicate pH and conductivity measurements in addition to those used to check for stabilization. Collect these after the well has been purged.

8. Enter time, date, and your initials clearly on all sample labels.

9. Record information, as it becomes available, on the Field Record Form. The information that must be recorded on the Field Record Form is described in Procedure AD-2. Place both names of the Radiation Protection Technologist sampling team on the Field Record and Chain-of-Custody Forms.

10. Check the labels on the sample containers to determine which ones can be filled using the submersible pump. A blue line on the right side of the sample label indicates that a bladder pump should be used to fill that particular container (if available).

11. Fill the appropriate sample containers as described under "General Sample Collection Procedure," Subsection 4.2.1. of this procedure, step 2, starting with bottles with septum tops.

4.2.3 Sample Collection Using the HydroStar Pump

Position Responsible: <u>RADIATION PROTECTION TECHNOLOGISTS</u>

Follow these steps to collect samples from wells containing a HydroStar pump.

1. On arrival at the well head, immediately determine depth-to-water (see Procedure WL-1) and record the determined values on the Field Record Form.

2. Determine whether the well will be sampled using the pneumatic cylinder assembly or manually. Use the cylinder if possible.

3. If the well is to be sampled using the pneumatic cylinder assembly, attach the pneumatic cylinder assembly to the well head assembly in the following manner:

   a. Insert the support for the pneumatic cylinder into the column support on the well head assembly (Figure 4). When inserting the cylinder support into the column support on the pump assembly, at least two holes on the cylinder support must overlap with two holes on the column support. If less than two holes overlap, use the extension supplied with the HydroStar pneumatic cylinder. Align the pumping system in the same manner as described above.

   b. Pull the cylinder rod down until it is fully extended and has stopped.

   c. Align the eyelet on the top portion of the turnbolt with the clevis pin hole on the lower portion of the cylinder rod.

   d. Align the hole on the cylinder support with the column support on the well head so that the turnbolt eyelet and clevis pin hole on the cylinder rod are aligned when the piston is fully extended.

   e. Insert the clevis pin through one of the intersecting pairs of holes on the column support and clip a hitch pin into the holes in the small end of the clevis pin.

   f. Check the alignment on the turnbolt eyelet with the hole on the cylinder rod. The alignment must be nearly perfect, neither too high nor too low. On deep wells located in the 200 Areas, the eyelet should be 1/8 to 1/4 inch below the hole on the cylinder rod. This will require pulling the turnbolt assembly up to align with the hole on the cylinder rod.

   g. Adjust by rotating the turnbolt clockwise or counterclockwise.

4. If the well is to be sampled manually, skip to step 15.

5. Attach either the purging hose (large diameter), the Teflon sampling hose, or stainless steel manifold to the outlet on the discharge tee of the sampling pump. NOTE: Do not collect samples using the purge hose.

6. Attach the quick-connect on the supply hose to the unattached end of the control valve on the pneumatic cylinder. The input air pressure should not exceed 120 psi.

7. Turn on air supply to the control valve.

9 0 1 1 7 7 4 0 4 0 3

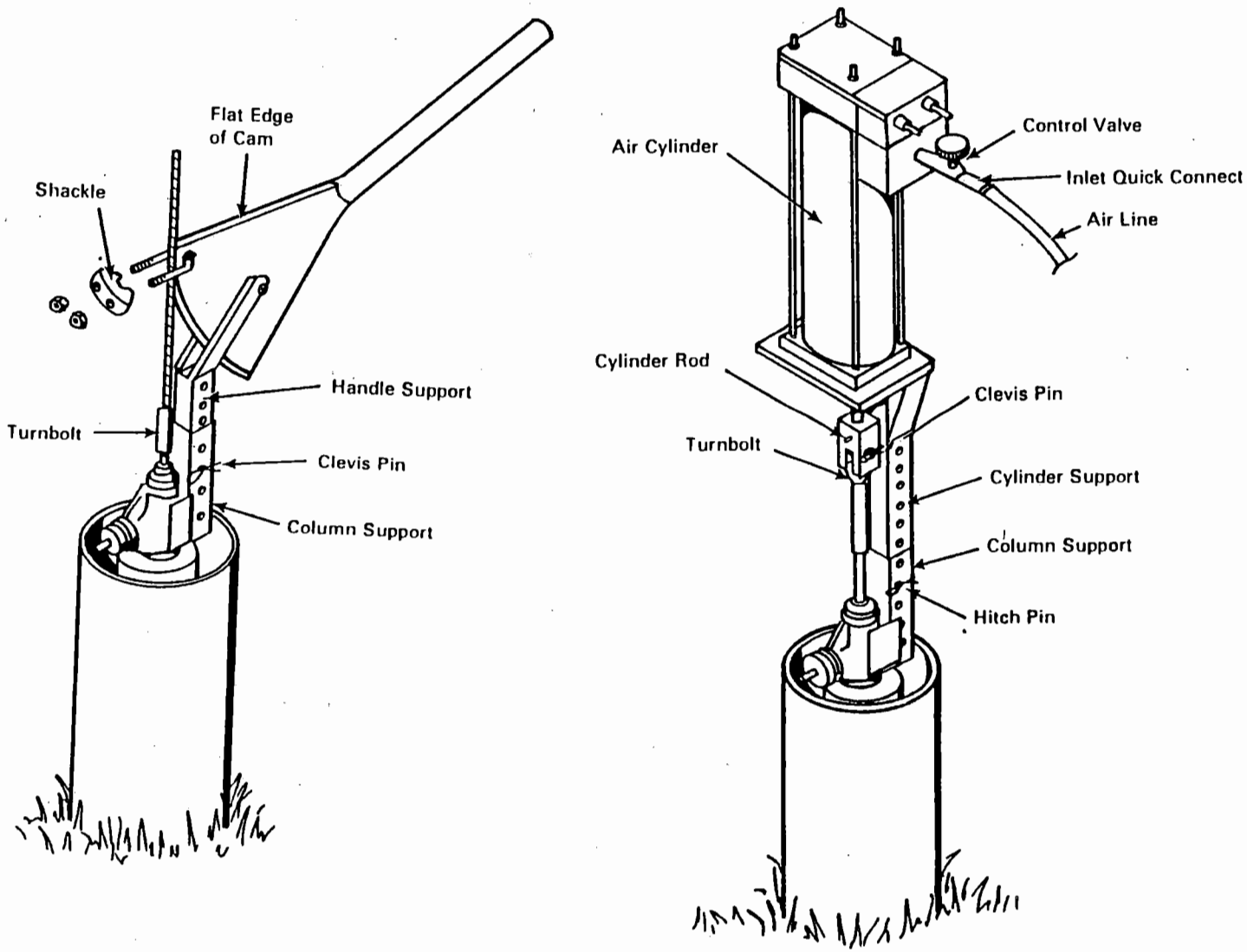

FIGURE 4. Diagram of Well Head Assembly

8. Turn on the control valve on the pneumatic cylinder. The piston will begin to operate.

9. Adjust stroke rate to no more than 60 per minute. (A stroke is defined as one downward and one upward extension.) If the pneumatic cylinder assembly is not operating correctly, the well may be hand-pumped as described under step 4b of this procedure. The stroke speed of the pneumatic cylinder can be adjusted with the control valve located on the top of the pneumatic cylinder. On deep wells the stoke rate could decrease significantly less than 60 per minute.

10. If sampling with the Teflon hose only, slow down the pumping rate until the piston just operates smoothly. This rate should be less than 10 strokes a minute or as slow as possible to maintain a stable low flow.

11. Attach the Teflon sampling hose, if not already connected during purging, to the outlet on the discharge tee of the pump head or to the stainless steel sampling manifold. If the well being sampled does not have a purge volume or purge time listed on the Field Record Form, purge the well for a minimum of 20 minutes, and until the pH stabilizes within ± 0.1 pH units, temperature within ± 1.0°C, and conductivity within ± 10% of the previous reading. If a stainless steel manifold is used, a stroke rate greater than 10 strokes/minute may be maintained.

NOTE: If requested on the Field Record Sheet, collect four replicate pH and conductivity measurements in addition to those used to check for stabilization. Collect these after the well has been purged.

12. Proceed with sampling all unfiltered samples (see Section 4.2.1). Start with the sample bottles with septum tops. The flow rate at the end of the sampling hose should not exceed 1 liter/minute when filling bottles with septum tops. Sample flow rate for large bottles may be increased, if needed.

13. Attach the filter assembly and purge the filter according to directions listed in Procedure GC-4. If too much pressure is exerted across the filter, the membrane will rupture, usually resulting in a popping noise. If this happens, replace the filter and restart the filtering procedure.

14. Dismantle the pneumatic pumping assembly as described below.

    a. Disconnect the air supply at the pneumatic cylinder.

    b. Disassemble pneumatic cylinder in reverse order of substeps 3a through 3g above.

15. If the well is to be sampled manually with this pump, insert the handle support into the column support on the pump head assembly so that at least two holes on the handle support overlap with two holes on the column support (Figure 2).

16. Slide the clevis pin through one of the intersecting pairs of holes on the column support.

17. Clip the hitch pin into the hole in the small end of the clevis pin.

18. Remove the turnbolt on the top of the rod at the well head.

19. Attach the turnbolt on the end of the wire rope attached to the handle assembly onto the threaded rod at the top of the well head.

20. Lift the handle so that the flat edge of the cam nearest the shackle is approximately parallel with the ground.

21. Pull all the slack out of the wire rope.

22. Using either an adjustable or 9/16 inch open-end wrench, tighten both nuts on the shackle until the sheath on the wire rope is compressed. Remember to keep all the slack out of the wire rope.

23. Attach either the purging hose (large diameter) or the Teflon sampling hose (small diameter) to the outlet on the discharge tee of the sampling pump.

24. Begin pumping the operating handle with smooth, even strokes. For best performance, use 20 to 45 strokes per minute for purging the well. Use less than 10 strokes per minute during sampling. When the filter assembly is attached, special attention is required to prevent rapid build up of pressure across the filter. If too much pressure is exerted across the filter, the membrane will rupture, usually resulting in a popping noise. If this happens, replace the filter and begin sampling for the filtered sample according to the Procedure GC-4.

25. Take samples as described in Section 4.2.1, "General Sample Collection Procedure," after pH, conductivity, and temperature have stabilized.

26. When sampling is completed, disassemble the handle assembly in reverse order of steps 4b through 11b above.

4.2.4 Sample Collection Using a Bladder Pump

Position Responsible: <u>RADIATION PROTECTION TECHNOLOGIST</u>

If the well has a dedicated bladder pump, turn on the air compressor and use the procedure described below.

1. The diagram of the system without the low submergence adapter (original system) is seen in Figure 5. The hookup of the 3017 low submergence adapter can be seen in Figure 6. All hose ports and connections are marked on the device. Use these Figures to hook up the adapter. A small vacuum pump (Gast pump) will be used for suction instead of the air compressor inlet as noted in Figure 6.

2. Operate the 3111 controller in the normal manner with the 3017 low submergence adapter as shown in Figure 6. Optimum refill cycle times will be somewhat shorter with the 3017 installed. Note that a minimum pressure of 25 psig has to be maintained through the controller for the 3017 to operate. During purging, the flow throttle on the 3111 controller, located in the lower left hand corner of the controller panel, should be turned all the way clockwise so that the full 100 psig available from the compressor is delivered to the pump.

3. Five to 15 pumping cycles are required to purge the air from the bladder pump and tubing. Full water flow from the sample supply tube should then begin. After water flows from the outlet tube, run the bladder pump for at least 5 minutes before taking samples.

4. To reduce the water-flow rate during sample collection, turn the throttle control on the left side of the control panel in the counterclockwise direction. To increase the flow rate, turn the throttle control clockwise.

5. To optimize pumping efficiency for a specific well depth, refer to the pump manufacturer's operating instructions.

4.2.5 Sample Collection Using a Teflon Bailer

Position Responsible: RADIATION PROTECTION TECHNOLOGIST

Take the following steps when collecting a sample using a Teflon Bailer.

1. Unclasp the metal bailer from the winch line and replace it with the Teflon bailer.

2. Disengage the winch clutch and slowly lower the bailer into the water.

3. Engage the winch clutch when the bailer strikes the water surface.

4. Turn on the electric winch and slowly raise the Teflon bailer to the surface.

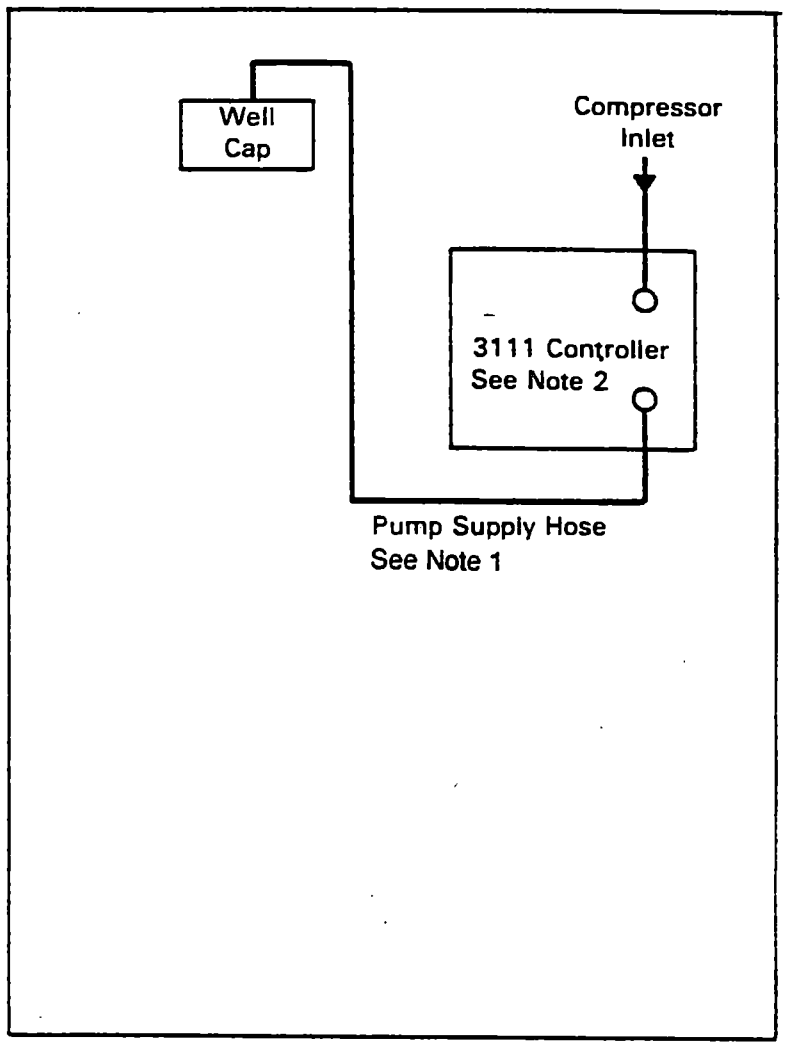

Notes:
1. Supplied with 3111 Compressor/Driver
2. 25 psig Minimum Required on Controller for Proper Operation

FIGURE 5. Original System for the Bladder Pump

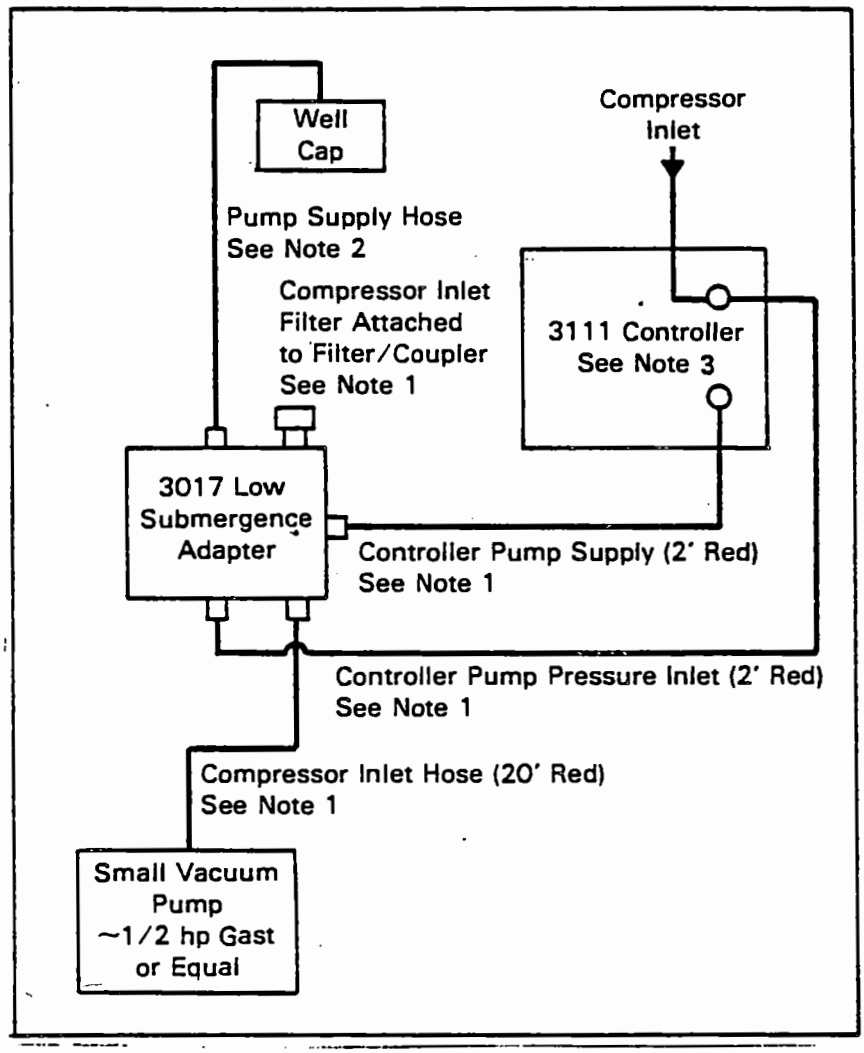

Notes:
1. Supplied with 3017 Low Submergence Adapter
2. Supplied with 3111 Compressor/Driver
3. 25 psig Minimum Required on Controller for Proper Operation

FIGURE 6. Connecting the Low Submergence Adapter to the Bladder Pump

5. Lower, fill, and empty the bailer at least twice before collecting a sample.

6. Unscrew the cap of the sample container, being careful not to touch the lip of the bottle or the inside of the Teflon liner. Avoid touching the mouth of the Teflon bailer.

7. Unclasp the Teflon bailer.

8. Pour the water from the bailer into the sample container slowly to prevent trapping any air bubbles (VOA Samples). Avoid splashing or agitating the water while the sample container is being filled.

9. Obtain sample temperature pH, and conductivity as described in Procedures FA-1, FA-2, and FA-3, and record on the Field Record Form. If the ground-water sample is being collected upon encountering the water table during drilling, the measurement of pH, conductivity, and temperature is not required.

4.2.6 Collecting Samples from a Piezometer by Using the Air Lift Method

Position Responsible: RADIATION PROTECTION TECHNOLOGIST

NOTE: This method should only be used for radioactive constituents.

Some piezometer tubes are sampled by the air lift method, in which the sample water is pushed up and out of the well by compressed air. A 1/2-in.-diameter PVC tube has been installed in these wells for this purpose.

1. Connect the compressor hose to the piezometer tube.

2. Open the regulator valve to pressurize the hose and continue with the compressor running until water is forced out of the outlet on the side of the piezometer adapter head.

3. Rinse the bucket twice with purge water before filling. Fill sample bottle from bucket.

4. Continue with step 2 of "General Sample Collection Procedure," in subsection 4.2.1 of this procedure.

4.2.7 Collecting Samples from a Piezometer by Using the Bailing Method

NOTE: This method should be used to sample for radionuclide constituents only.

Position Responsible: RADIATION PROTECTION TECHNOLOGIST

A few piezometer tubes are sampled by the bailing method. These are piezometers that do not produce enough water to sample by air lift. The

bailer used consists of a flexible rubber tube, 1-in. in diameter and approximately 1.5 to 3 feet long. On one end, a brass plug has been inserted and wired in place.

1. Bail the piezometer tube in the same manner as in steps 1 through 9 of subsection 4.2.4 of this procedure.

2. Pour the sample collected into a sampling bottle until the required amount of sample is obtained.

3. Obtain sample temperature, pH, and conductivity as described in Procedures FA-1, FA-2, and FA-3, and record on the Field Record Form.

4.2.8 Cleaning of Sampling Manifolds

Position Responsible: RADIATION PROTECTION TECHNOLOGIST

All sampling manifolds should be cleaned at the end of the day.

1. Rinse sampling manifold with tap water, then distilled water, and seal in a plastic bag.

2. If oil or grease is present on the manifold, wash the inside and outside of the manifold with a mild detergent, and rinse twice with warm or hot tap water, followed by deionized (DI) or distilled water, and place in plastic bag.

9011774041

THIS PAGE INTENTIONALLY
LEFT BLANK

3 1 4 0 4 7 1 0 6

GC-2 IN-LINE SAMPLE FILTRATION PROCEDURE

1.0 APPLICABILITY

This procedure is to be used when filtered ground-water samples are to be collected during routine sample collection from monitoring wells.

2.0 DEFINITIONS

N/A

3.0 RESPONSIBLE STAFF

- Radiation Protection Technologists

4.0 PROCEDURE

4.1 Prerequisites

4.1.1 Equipment

- filters (QED "Sample Pro" Model 8100 or 8000)
- 500-mL container
- tubing for the filter adapter
- by-pass assembly (for submersible pump)
- Field Record Form specifying sample volume.

4.2 Step-by-Step Instructions

Follow Procedure GC-1, "Ground Water Sample Collection," to prepare the well for ground-water sampling using the bladder, HydroStar, or submersible pump. Collect the filtered sample after all other samples have been collected.

One filter should be sufficient to collect the required sample volume under normal conditions. If a second filter is required, repeat the filter wash procedure described below. If the filters clog too quickly, replace the standard filter (QED Model 8100) with the high capacity model (QED Model 8000) and repeat preparation, Procedure GC-1.

4.2.1 Bladder Pump Method

Position Responsible: RADIATION PROTECTION TECHNOLOGISTS

To collect a filtered sample from a well that contains a bladder pump:

1. Set the maximum discharge pressure to 60 psi and turn off the bladder pump controller.

2. Screw the inlet end of the filter assembly (marked inlet) into the threaded adapter, being careful not to touch filter ends to any surface.

3. Turn on bladder pump (check maximum pressure).

4. Filter 500 mL, as a filter wash, into the 500-mL container.

5. Dispose of the 500 mL wash and fill the sample bottles as specified on the Field Record Form and on the sample bottle labels.

6. Turn off bladder pump, remove the filter assembly, and return the assembly to the sample bottle box for proper disposal at the laboratory.

4.2.2 HydroStar Pump Method

Position Responsible: RADIATION PROTECTION TECHNOLOGIST

To collect a sample from a well that contains a HydroStar pump:

1. Turn off air to the HydroStar pump at the piston assembly.

2. Screw the inlet end of the filter assembly (marked "inlet") into the threaded adapter at the end of the Teflon tubing extending from the HydroStar pump, being careful not to touch filter ends to any surface.

3. Slowly turn on the air until the piston just operates smoothly. This rate should be less than 10 strokes a minute. If too much pressure is exerted across the filter, the membrane will rupture, usually resulting in a popping noise. If this happens, replace filter and restart the filtering procedure.

4. Filter 500 mL, as a filter wash, into the 500-mL container.

5. Dispose of the 500-mL wash and fill the sample bottles as specified on the Field Record Form and on the bottle labels.

6. Turn off the HydroStar pump, remove the filter assembly, and return the filter assembly to the sample bottle box for proper disposal.

4.2.3 Submersible Pump Method

Position Responsible: RADIATION PROTECTION TECHNOLOGIST

This pump should be used to collect a filtered sample only if a by-pass assembly is used to regulate the water pressure going to the filter apparatus. The by-pass must also be capable of maintaining a sufficient water flow to prevent damage to the submersible pump.

9 1 1 7 7 1 0 4 1 4

To collect a sample from a well that contains a submersible pump:

1. Before turning on the submersible pump, mount the by-pass assembly to the well head and the Teflon sampling hose to by-pass assembly.

2. Turn on the submersible pump.

3. Purge the well with the by-pass valve completely open.

4. To collect filtered samples, open by-pass valve completely.

5. Screw the inlet end of filter assembly (marked "inlet") into the threaded adapter at the end of the Teflon tube. Be careful not to touch filter ends to any surface.

6. Slowly close the by-pass valve until a steady flow of water is observed through filter.

7. When a steady flow is achieved, filter 500 mL, as a filter wash, into the 500-mL container.

8. Dispose of the 500-mL wash and fill the sample bottles as specified on the Field Record Form and on the sample bottle labels.

9. Turn off the submersible pump and remove the filter assembly from the by-pass assembly.

10. Disconnect the by-pass apparatus from the well head.

11. Return the filter assembly to the sample bottle box for proper disposal at the laboratory.

9 0 1 1 7 7 4 0 4 1 5

THIS PAGE INTENTIONALLY
LEFT BLANK

3017740415

GC-3 DISPOSAL OF PURGE WATER FROM MONITORING WELLS

1.0 APPLICABILITY

This procedure is to be used during routine sampling, when purge water from a monitoring well contains selected constituents above drinking water standards, and when the Washington State Department of Ecology directs that purge water may not be disposed to the ground surface. Wells where purge water may not be disposed to the ground surface are identified by the "T" on the upper left-hand corner of the sample labels on the sample bottle.

2.0 DEFINITIONS

N/A

3.0 RESPONSIBLE STAFF

- Radiation Protection Technologists

4.0 PROCEDURE

4.1 Prerequisites

4.1.1 Equipment

- 55-gallon plastic drum liner (cut off to 24-inch height)
- two 50-foot x 3/4-inch hoses
- protective gloves (e.g., surgical gloves)
- two 25-foot extension cords
- sampling manifold
- tank truck or storage drums
- plastic bucket.

4.1.2 Safety Precautions

Protective gloves must be worn when contact with the purge water is possible.

Care must be taken to ensure that water left in hoses and in the sump pump is drained into the drum liner for transfer to the tank truck or storage drums.

After purge water is disposed of into the tank truck or storage drums, the handling, storage, and ultimate disposal of the water becomes the responsibility of Westinghouse Hanford Company waste disposal personnel.

4.2 Step-by-Step Instructions

4.2.1 HydroStar Pump Method

Position Responsible: RADIATION PROTECTION TECHNOLOGIST

1. Place the drum liner as close to the well casing as practical.

9011774041 7

2. Connect hose bib of manifold to the HydroStar pump outlet and place Teflon sampling hose end into the drum liner or attach purge hose directly to HydroStar pump discharge. Extend discharge end of purge hose into storage drum.

3. Commence purging of well with HydroStar pump.

4. When purging is complete, fill all sample bottles using a Teflon hose over the drum liner.

5. After sampling, pour any residual water in drum liner into a storage drum.

6. If disposing of the purge water into storage drums, secure the drum lid and mark the well number on the storage drum.

4.2.2 Submersible Pump Method

Position Responsible: RADIATION PROTECTION TECHNOLOGIST

1. Connect stainless steel sampling manifold to purge hose.

2. Extend the discharge end of the purge hose into a tank truck or storage drum.

3. Place the drum liner beneath the valve on the sampling manifold.

4. Begin well purging.

5. When purging is completed, open the valve on the sampling port (with Teflon sampling hose attached) and collect samples.

6. After sampling, transfer any residual water in the drum liner to a tank truck or storage drum.

7. If disposing the purge water to storage drums, secure the drum lid and mark the well number on the storage drum.

4.2.3 Bladder Pump Method

Position Responsible: RADIATION PROTECTION TECHNOLOGIST

1. Place the drum liner next to the well casing and discharge purge water directly into the drum liner while purging and sampling.

2. After sampling, transfer any residual water in the drum liner to a tank truck or storage drum.

3. If disposing purge water to a storage drum, secure the drum lid and mark the well number on the drum.

NOTE: During freezing weather drain all lines.

9 1 4 0 4 7 1 1 0 6

GC-5 GEOCHEMICAL MONITORING OF WELL DEVELOPMENT

1.0 APPLICABILITY

This procedure describes methods and criteria for determining when a monitoring well is suitably developed for the purpose of collecting groundwater samples. The procedure may be applied any time after a well is completed with screen and sand pack. The procedure requires sustained pumping and may be applied during aquifer testing, during development after screen installation, or during purging before sample collection. In each case, pumps will be operated and safety and similar matters will be considered according to the procedure that governs the actual pumping activity.

2.0 DEFINITIONS

N/A

3.0 RESPONSIBLE STAFF

- Well-Site Geologist.

4.0 PROCEDURE

4.1 Prerequisites

4.1.1 Equipment

- pH meter
- conductivity meter
- thermometer (if not internal to the above meters)
- turbidimeter
- colorimeter or spectrophotometer
- sample bottles (a dozen bottles are recommended)
- marking pen or labels for the sample bottles.

NOTE: Because there is a variety of commercially available equipment suitable for use in this procedure, detailed instrument operating instructions are not included here. In all cases, follow the manufacturer's instructions. In all cases, the manufacturer's catalog listings are accepted as certification of specifications for accuracy, precision, and resolution.

NOTE: Apparatus and calibration standard solutions for the measurement of pH, conductivity, and temperature are described in Procedures FA-1, FA-2, and FA-3. For conductivity instruments and thermometers, periodic calibration, as recommended by the manufacturer, will be recorded in a lab record book (LRB) or other suitable document maintained by the instrument custodian, or kept with the instrument.

NOTE: For the measurement of turbidity, a field-portable turbidimeter with an accuracy of ±5% of full scale and resolution to at least ±0.02 in the most sensitive operating range is required. The instrument must be supplied with gel secondary standards for routine calibration of all ranges.

NOTE: Measurement of iron and chromium requires a field-portable colorimeter or spectrophotometer and associated glassware and reagents. Resolution to ±0.05 mg/L is required, and accuracy must be at least ±20% of full scale. If the instrument/reagent system is not pre-calibrated by the manufacturer, calibration must be described in an LRB or similar document.

4.2 Step-by-Step Instructions

Position Responsible: WELL SITE GEOLOGIST

1. About 5 to 10 min after the pump is started, collect an unfiltered sample of the water and measure pH, specific conductance, temperature, turbidity, chromium (VI), and iron.

NOTE: A water sample of about 250 mL will be required to complete the tests. To allow for occasional spillage, repeated tests, and so on, the collection of about 1 L is recommended. It is preferable to use disposable plastic bottles. Rinse a sample bottle three times with small portions of the sample stream before filling it.

NOTE: Samples are unfiltered, unpreserved, and will not be retained, so labelling may be minimal. The minimum required labelling is the time of collection (or similar unique identifier), which can be written on the bottle with a marking pen.

NOTE: Standardize the pH meter before measuring each sample. Record the pH values of the calibration standards used in the "comment" section of the log form. Also, measure pH, conductivity, and temperature as soon as possible after collection. Moderate delay of up to a few hours will not affect the iron and chromium measurements.

NOTE: Do not measure conductivity using a sample aliquot that has had the pH probe inserted into it.

Record the results of measurements on the well development log shown in Figure 1 (or equivalent), along with the time of sample collection.

2. Repeat these measurements according to the following schedule:

   a. Collect a sample every 30 min during pumping for the first 2 h, hourly for the next 8 h, and every 3 h thereafter.

   b. Collect a sample just before the pump is shut down.

9011774042 0

WELL DEVELOPMENT LOG

Collector _____ Date _____

Well Number _____ Location _____ Pumping Rate _____ Time Pump Start _____ Pump Stop _____

Date	Time	Sample #	pH	Conductivity	Temp	Turbidity	Fe	Cr(VI)	Comments

NOTE: Unless otherwise noted, the following units are assumed:

Pumping rate-gpm
pH - pH units
Turbidity-NTU
Fe - mg/L
Conductivity - µS/cm
Cr - mg/L

Equipment:

pH _____ Fe _____
Cond. _____ Cr(VI) _____
Turb. _____

FIGURE 1. Well Development Log

3. The well is considered suitably developed for the purpose of collecting and analyzing ground-water samples (see note below) when the following criteria are met for a suite of three successive samples:

   a. The maximum pH range is 0.05 units.

   b. The conductivity values fall within 5% of the mean of the three values.

   c. The maximum turbidity range of the three samples is 0.5 NTU, and turbidity is less than or equal to 5 NTU.

   d. The maximum iron concentration range is 0.05 mg/L or 10% of the mean of the three values, whichever is greater.

   e. The maximum chromium concentration range is 0.05 mg/L or 10% of the mean of the three values, whichever is greater.

   f. Except for turbidity, none of the measurements show an apparent upward or downward trend.

NOTE: If the development criteria are met before pumping is discontinued, notify the project manager for direction.

NOTE: If it is desired to collect ground-water samples for formal analysis (e.g., the results must be RCRA, CERCLA, or EPA reportable) in conjunction with development pumping, the samples must be collected after the above criteria have been met, without changing the pumping rate, and before shutting off the sample stream.

NOTE: Be sure to record which instruments were used to make the measurements required in this procedure (see example log form).

FA-1 TEMPERATURE MEASUREMENT PROCEDURE

1.0 APPLICABILITY

This procedure is to be used during routine ground-water sampling, where temperature measurements are made during well purging and just before actual sample collection. Samples may not be collected until the temperature of the sample stream has stabilized, that is, two consecutive readings must agree within ±1.0°C. A minimum of three measurements must be made during well purging.

2.0 DEFINITIONS

N/A

3.0 RESPONSIBLE STAFF

- Radiation Protection Technologists.

4.0 PROCEDURE

4.1 Prerequisites

4.1.1 Equipment

- Calibrated electronic digital thermometer
- Field Record Form.

NOTE: Before leaving for the field, ensure that the electronic thermometer reads within 1° Centigrade of the NBS calibrated thermometer in the laboratory. If not, adjust (if possible), or replace. Document this calibration check on the Digital Thermometer Calibration Check Log (Figure 1).

4.2 Step-by-Step Instructions

Position Responsible: RADIATION PROTECTION TECHNOLOGIST

1. Switch on the digital thermometer. Make sure that it is set to read in degrees centigrade.

2. Place the probe into the stream of water being discharged by the pump.

3. The temperature is indicated by a digital display, which will normally fluctuate for a few seconds. Wait until fluctuation ceases, then record the time and temperature on the Field Record Form (Figure 2).

Standard Mercury Thermometer Serial Number (S/N) _____

Date	Digital Thermometer S/N	Performed By	As-Found Within ±1°C of Standard		If No, Adjusted to ±1°C?		Comments
			Yes	No	Yes	No	

FIGURE 1. Digital Thermometer Calibration Check Log

9 0 1 1 7 7 1 0 4 2 4

Battelle
Pacific Northwest Laboratories

GROUND-WATER SAMPLE FIELD RECORD

Well Number _____
Total Purge Volume (gal) _____
Purge Flow Rate (gal/min) _____
Hydrostar (Time On) _____
Submersible (Time On) _____
Bladder (Time On) _____

Date

Calculations

SAMPLES COLLECTED

SAMPLE NO	BOTTLE ID	PUMP	COLLECTOR

TOTAL NUMBER OF BOTTLES _____

FIELD MEASUREMENTS

Previous pH _____
Steel Tape No _____
E - tape = _____
PH/Cond. No _____
Thermometer No _____

WATER LEVELS (ft)				Time							
Held				pH							
Cut				Temp (°C)							
Depth Below T.C.				Cond (us/cm)							

FIELD OBSERVATIONS

Weather _____
General Problems/Unusual Events _____
Equipment Irregularities _____
Container Irregularities _____
Comments _____

Well capped and locked ☐ Yes ☐ No
Data Recorded By _____
Chain-Of-Custody Form No _____
PNL-MA-567 GC-1

Samples Surveyed for Gamma Radiation by RPT's _____
Data Checked By _____
Laboratory Record Book No. _____
Page No _____

BC-1500-113 (03/89)

FIGURE 2. Field Record Form

THIS PAGE INTENTIONALLY
LEFT BLANK

9 0 1 1 7 7 4 0 4 2 3

FA-2 CALIBRATION OF CONDUCTIVITY METER AND MEASUREMENT OF FIELD CONDUCTIVITY

1.0 APPLICABILITY

This procedure is to be used during routine ground-water sampling, where conductivity measurements are made during well purging and just before actual sample collection. Samples may not be collected until the conductivity of the sample stream has stabilized; that is, two consecutive measurements must agree within ± 10 percent. For wells equipped with pumps, a minimum of three measurements must be made during well purging. For wells being sampled by bailer, a single reading is sufficient, and the determination of stabilization will not be done.

The calibration of the instrument used to measure sample conductivity must be verified each day before leaving for the field to collect samples.

2.0 DEFINITIONS

N/A

3.0 RESPONSIBLE STAFF

- Radiation Protection Technologists.

4.0 PROCEDURE

4.1 Prerequisites

4.1.1 Equipment

- a field portable conductivity meter with the following specifications:
  - accuracy ± 5% of full scale or better
  - resolution, by either digital or analog display, to 1% of full scale or less
  - inclusion of a dip sensor, a cup cell, or a flow-through cell
  - either manual or automatic temperature compensation.
- distilled or deionized water

NOTE: Many suitable commercially available conductivity meters exist, and the manufacturer's catalog listing of specifications is acceptable evidence that a given instrument meets the above specifications.

- a standard solution of known conductivity for conductivity meter calibration. For Hanford surface and ground water, a standard

solution having a conductivity of from 500 to 1000 $\mu S/cm$ is most suitable. The solution must meet the following requirements:

- The nominal conductance of the solution must be clearly noted on the label of the solution bottle.

- The temperature dependence of the solution must be clearly noted on the label.

- The accuracy of the solution must be noted on the label, and the tolerance must be no greater than ± 1% relative error.

NOTE: Commercially prepared conductance standard solutions that meet the above requirements are acceptable for this procedure, and the manufacturer's label containing lot number and expiration date is accepted as certification of specifications. Laboratory prepared conductance standards are acceptable, if made using accepted procedures fully described in standard reference works. In this case, the label must also include reference to the procedure used to prepare the solution, the date of preparation, and the name of the preparer.

- if the meter does <u>not</u> include a temperature display readable to at least the nearest 0.5°C, a thermometer accurate to ± 1.0°C is required. Any type of thermometer may be used, and the manufacturer's catalog listing of specifications is acceptable evidence of the required accuracy.

- training records for Radiation Protection Technologists who use this procedure must include certification that the user has received instruction in the operation, calibration, and routine care and maintenance of the specific instrument applied in the field measurement of conductivity

- the manufacturer's written instructions for the instrument(s) in use are to accompany and be considered part of this procedure

- Field Record Forms (Figure 1)

- Conductivity Meter Calibration Record (Figure 2).

4.2 General Instructions

Position Responsible: <u>RADIATION PROTECTION TECHNOLOGISTS</u>

Because there is a wide variety of commercially available conductivity meters (and thermometers) suitable for use in this procedure, it is not possible to provide detailed operating instructions. In each case, follow the manufacturer's instructions. It is particularly important to strictly observe the manufacturer's recommendations regarding care and storage of the sensing elements, battery charging (where applicable) or battery life, exact

Battelle
Pacific Northwest Laboratories

GROUND-WATER SAMPLE FIELD RECORD

Well Number _____
Total Purge Volume (gal) _____
Purge Flow Rate (gal/min) _____
Hydrostar (Time On) _____
Submersible (Time On) _____
Bladder (Time On) _____

Date

Calculations

SAMPLES COLLECTED

SAMPLE NO	BOTTLE ID	PUMP	COLLECTOR
TOTAL NUMBER OF BOTTLES			

FIELD MEASUREMENTS

Previous pH _____
Steel Tape No _____
E - tape = _____
PH/Cond. No _____
Thermometer No _____

WATER LEVELS (ft)				Time								
Held				pH								
Cut				Temp (°C)								
Depth Below T C				Cond (µs/cm)								

FIELD OBSERVATIONS

Weather _____
General Problems/Unusual Events _____
Equipment Irregularities _____
Container Irregularities _____
Comments _____

Well capped and locked ☐ Yes ☐ No
Data Recorded By _____
Chain-Of-Custody Form No _____
PNL-MA-567 GC-1

Samples Surveyed for Gamma Radiation by RPT's _____
Data Checked By _____
Laboratory Record Book No. _____
Page No. _____

BC-1500-113 (03/89)

FIGURE 1. Field Record Form

Calibration Check for Conductivity Meter

Calibration Std Lot # _____ USE CALIBRATION METHOD LISTED IN PROCEDURE FA-2

Serial No.	Operator	Date	Calculated Value	Observed Value AM	Observed Value PM

FIGURE 2. Conductivity Meter Calibration Record Form

0 0 4 0 7 1 1 0 6

calibration procedure, and the environmental extremes under which the instrument is operable. In addition to the manufacturer's instructions, the following steps must be followed:

1. Calibrate the conductivity meter before it is used in the field to measure sample conductivity, and periodically thereafter. Follow the manufacturer's recommendation for the frequency of calibration, and use the calibration standard solution for conductivity described above. A calibration record will be maintained for each instrument and will be on file with the instrument custodian. Check the instrument calibration each day before leaving for the field, and record, sign, and date a log form showing the results. (This ensures that instruments subject to daily use are in operating condition.) If the calibration check shows greater than ± 5% error with respect to the standard used, the instrument must be recalibrated.

2. After instrument calibration or calibration check, discard the used portion of the standard solution. Never return it to the solution bottle.

   NOTE: Always replace cap to standard solution bottle when calibration is completed.

3. In the field, thoroughly rinse the cell or dip sensor with two portions of the actual sample, and then measure conductance on a third portion. Record the conductance as shown on the meter display, sample temperature, and any other required data on the Field Record Form. After measuring sample conductivity, rinse the probe or cell with distilled or deionized water.

9 0 1 1 7 7 4 0 4 3 1

THIS PAGE INTENTIONALLY
LEFT BLANK

9011774043 2

FA-3 CALIBRATION OF pH METER AND MEASUREMENT OF FIELD pH

1.0 APPLICABILITY

Ground-water pH is measured during well purging and just before actual sample collection. Samples may not be collected until the pH of the sample stream has stabilized; that is, two consecutive measurements agree within 0.10 pH units. For wells equipped with pumps, a minimum of three measurements should be made during purging. For wells being sampled by bailer, a single reading is sufficient, and a determination of stabilization will not be done.

The instrument used to measure sample pH in the field must be calibrated each day before leaving for the field to collect samples.

2.0 DEFINITIONS

N/A

3.0 RESPONSIBLE STAFF

- Radiation Protection Technologists.

4.0 PROCEDURE

4.1 Prerequisites

- a field portable pH meter with the following specifications:
  - accuracy ± 0.1 pH unit or better
  - resolution, by either digital or analog display, to 0.01 pH units or less
  - inclusion of dip electrodes, a cup cell, or a flow-through cell
  - either manual or automatic temperature compensation.

NOTE: Many suitable commercially available pH meters exist, and the manufacturer's catalog listing of specifications is acceptable evidence that a given instrument meets the above requirements.

- distilled or deionized water
- standard buffer solutions for pH meter calibration. At least two solutions are required, usually with nominal pH values of 7 and 10. Buffer values of 7 and 10 bracket the normal pH of surface and ground water at the Hanford Site. Other values may be used so long as the sample pH is bracketed. It is best to choose buffers whose values are near to the sample pH. The buffers must meet the following requirements:

- The temperature dependence of the solution must be clearly noted on the label of the solution bottle.

- The accuracy of the solution must be clearly noted on the label, and the tolerance must be no greater than ± 0.05 pH units.

- Nominal value, lot number, and expiration date must be clearly noted on the label, and the solutions should be color-coded.

NOTE: Commercially prepared pH buffer solutions are almost always color-coded, with the labels printed in different colors for different nominal pH values, and the solutions tinted the same color as the respective labels. The colors used by different manufacturers are not necessarily the same. The use of color-coded solutions is urged as a convenience, but is not a strict requirement of this procedure.

NOTE: Commercially prepared buffer solutions that meet the above requirements for this prerequisite are acceptable for this procedure, and the manufacturer's label is accepted as certification of specifications. Laboratory prepared buffer solutions may also be used, if made using accepted procedures fully described in standard reference books. In this case, the label must also include reference to the procedure used to prepare the buffers, the date of preparation, and the name of the preparer.

- training records for Radiation Protection Technologists who use this procedure must include certification that the user has received instruction in the operation, calibration, and routine care and maintenance of the specific instrument(s) applied in the field measurement of pH

- the manufacturer's written instructions for the instrument should accompany the instrument into the field

- Field Record Forms (Figure 1)

- pH Meter Calibration Record (Figure 2).

4.2 General Instructions

Position Responsible: RADIATION PROTECTION TECHNOLOGISTS

Because there is a wide variety of commercially available pH meters (and thermometers) suitable for use in this procedure, it is not possible to provide detailed operating instructions. In each case, follow the manufacturer's instructions. It is particularly important to strictly observe the manufacturer's recommendations regarding care and storage of the sensing electrodes, battery charging (where applicable) or battery life, exact calibration procedures, and the

9011774043 4

Battelle
Pacific Northwest Laboratories

GROUND-WATER SAMPLE FIELD RECORD

Well Number _____
Total Purge Volume (gal) _____
Purge Flow Rate (gal/min) _____
Hydrostar (Time On) _____
Submersible (Time On) _____
Bladder (Time On) _____

Date

Calculations

SAMPLES COLLECTED

SAMPLE NO	BOTTLE ID	PUMP	COLLECTOR
TOTAL NUMBER OF BOTTLES			

FIELD MEASUREMENTS

Previous pH _____
Steel Tape No _____
E - tape = _____
PH/Cond. No _____
Thermometer No _____

WATER LEVELS (ft)				Time							
Held				pH							
Cut				Temp (°C)							
Depth Below T C				Cond (µs/cm)							

FIELD OBSERVATIONS

Weather _____
General Problems/Unusual Events _____
Equipment Irregularities _____
Container Irregularities _____
Comments _____

Well capped and locked ☐ Yes ☐ No
Data Recorded By _____
Chain-Of-Custody Form No _____
PNL-MA-567 GC-1

Samples Surveyed for Gamma Radiation by RPT's _____
Data Checked By _____
Laboratory Record Book No. _____
Page No. _____

BC-1500-113 (03/89)

FIGURE 1. Field Record Form

pH 7 Lot # _____ **Calibration Check for pH Meter**

pH 10 Lot # _____ USE CALIBRATION PROCEDURES LISTED IN PROCEDURE FA-3

Serial No.	Operator	Date	Calculated Value	Observed Value AM	Observed Value PM

FIGURE 2. pH Meter Calibration Record

9011774035

environmental extremes under which the instrument is operable. In addition to the manufacturer's instruction, the following steps must be followed:

1. Calibrate the pH meter daily before leaving for the field, and log, date, and sign the results of calibration on the pH meter calibration record form (Figure 2).

NOTE: The principal reason for the above step is to ensure that the meter is in operational condition. Also, if this calibration step is performed using the same buffers used in the field, recalibration in the field may be avoided if meter drift is within the limits described below. Always replace cap to standard solution bottle when calibration is complete.

2. Before measuring sample pH in the field, check the meter calibration against both buffer solutions. If the results for both measurements are within 0.05 pH units of the correct values for the buffers, the meter need not be recalibrated. If not, follow the manufacturer's instructions for meter calibration. It is extremely important to thoroughly rinse the electrodes or cell with distilled or deionized water between measurements of different solutions. This prevents cross-contamination. Never return used buffers to the bottle; discard them instead. Meter calibration must be rechecked upon arrival at each sampling site. Also, it is recommended, but not required, that the meter be fully recalibrated before each sample measurement.

3. Thoroughly rinse the electrode or cell with distilled or deionized water, then dip the electrode in (or fill the cell with) the sample solution. Record the pH (to the nearest 0.01 unit) on the Field Record Form. After measuring sample pH, rinse the electrode with distilled or deionized water.

9011774043 7

THIS PAGE INTENTIONALLY
LEFT BLANK

09017404 38

WL-1 WATER-LEVEL MEASUREMENT PROCEDURE

1.0 APPLICABILITY

Water-level measurements are taken to determine piezometric head in the aquifer or to determine water-level changes during aquifer testing. Both radiation protection technicians and technical staff perform such measurements. Depth-to-water from the top of the well casing is measured with a steel tape or an electrical water-level indicator. Depth-to-water is subtracted from the surveyed elevation of the top of the well casing to obtain the elevation of the water table.

Graduated steel measuring tapes are more accurate than electrical water-level indicators and so should be used when accurate measurements are required. An electrical water-level indicator can be used to determine the approximate depth-to-water and may be the preferred technique for measuring depth-to-water during periods of rapid water-level change (e.g., during aquifer testing), where cascading water is present, when the inside of the casing is wet, or when oil or similar liquid is present above the surface of the water.

2.0 DEFINITIONS

- Measuring point - the place from which the depth-to-water in a well is measured. It is a point, generally the top of the casing on the north side, which has a known elevation and from which a measuring device can hang freely into the well.

3.0 RESPONSIBLE STAFF

- Project Manager
- Radiation Protection Technologist (RPT)
- Technical Staff.

4.0 PROCEDURE

4.1 Prerequisites

4.1.1 Equipment

The following equipment will be needed when measuring depth-to-water using a graduated steel tape:

- standardized steel measuring tape with attached stainless steel weight

- carpenter's chalk

- a record of previous water-level measurement in the well [e.g., from copy of Hanford Wells (PNL-5397)], if available
- Field Record Forms, Field Record Book, or Water Level Measurement Form
- towel
- wash bottle containing distilled or deionized water.

A wash bottle with distilled or deionized water is required to decontaminate the portion of the tape that penetrates into the water.

Store and transport steel tapes with care so that damage to the tapes are minimized and tapes are kept free of rust, dirt, and contamination.

The following equipment will be needed when measuring depth-to-water using an electrical water-level indicator:

- electrical water-level indicator
- engineer's measuring tape graduated in hundredths of a foot
- a record of previous water-level measurement in the well [e.g., copy of Hanford Wells (PNL-5397)], if available
- Field Record Forms, Field Record Book, or Water Level Measurement Form
- towel
- wash bottle containing distilled or deionized water.

A wash bottle with distilled or deionized water is required to decontaminate the portion of the tape that penetrates into the water.

Store and transport electrical water-level indicators with care so that damage to the instruments are minimized and the instruments are kept free of rust, dirt, and contamination.

The following safety equipment is required for measuring depth-to-water in wells:

- gloves
- steel-toed shoes
- hard hat when working near drilling or pump setting rigs.

4.1.2 Steel Tape Calibration Requirements

Steel tapes must be standardized before use by comparison with a calibrated steel tape as described in Procedure WL-2, "Standardization of Steel Tapes." Verify that the tapes are within their standardization period before use. Standardization status tags (Figure 1) have been attached to the steel tape frame.

4.1.3 Safety Precautions

Select appropriate gloves (e.g., viton, nitrile, or butyl rubber) based on contaminants expected in the well. If contaminants are not expected, leather gloves may be selected for protection.

Leather gloves shall be worn while making depth-to-water measurements with a steel tape, unless otherwise stated in the safety plan. Hard hats are to be worn when making measurements in the vicinity of a drilling or pump setting rig. Steel-toed shoes are to be worn at all times in the field.

4.2 Step-by-Step Instructions

4.2.1 Graduated Steel Tape Method

Position Responsible: RADIATION PROTECTION TECHNOLOGISTS OR TECHNICAL STAFF

NOTE: If automatic long-term water-level recording equipment is in the well, do not take water-level measurements unless otherwise instructed by the Project Manager. Note this on the Water-Level Measurement Form or in a Field Record Book.

Steel Tape Standardization
Last Standardization Date Next Standardization Date Standardization performed by
Deviation From Calibrated Tape

FIGURE 1. Steel Tape Standardization Status Tag

1. Record the

   - date (1)
   - name of the measuring device (e.g., Lufkin 500-foot steel tape) (2)
   - serial number of steel tape (3)
   - name of the person taking the measurements and number of the procedure followed (4)
   - well number (5)

   in the designated space on the Water Level Measurement Form (Figure 2) or in a Field Record Book.

2. Find the elevation of the measuring point and the estimated water level in Hanford Wells (or equivalent), or use an electric tape to find the approximate depth to water.

3. Chalk the 1-foot section of steel tape that is graduated in tenths or hundredths of a foot.

4. Lower the steel tape from the well's measuring point (marked with paint or stamped with an "X" on the top of the casing) to the estimated water level. To avoid splashing at the water surface, lower the tape slowly into the water.

5. Once the estimated water level has been reached, hold the nearest foot mark (held value) against the measuring point on the casing, and without allowing the tape to move any farther into the well, remove the tape from the well.

6. If the water level can be observed on the chalked portion of the tape, read the distance between the zero mark on the tape and the wet line (cut value) to the nearest 0.01 foot. If none of the chalked portion is wet, repeat the procedure, but allow more of the tape to go down the well (i.e., use a greater hold value).

   If all of the chalked portion of the tape is wet, dry the tape, rechalk it and repeat the procedure allowing less tape to go down the well (i.e., use a lesser hold value).

   Continue adjusting the length of the tape suspended in the well until the water level can be observed on the chalked portion of the tape.

Date ① _____ Page _____

Measuring Device ② _____ ③

Measured By ④ _____

Well Number	Time (PST)	Held	Cut	D/W or PSI
⑤	⑧	⑥	⑦	⑨

FIGURE 2. Water Level Measurement Form

9011774044 3

7. Record the

   - held value (6)
   - cut value to the nearest 0.01 foot (7)
   - time of measurement (8)
   - any deviations from the procedure, anomalies, or comments

   in the designated space on the Water Level Measurement Form (Figure 2) or in a Field Record book.

8. Calculate and record the depth-to-water on the Water Level Measurement Form.

   When using a steel tape with the section marked in tenths or hundredths of a foot between zero and 1 foot on the tape, subtract the wetted portion of the tape (cut value) from the held value.

   When using a steel tape with the section marked in tenths or hundredths of a foot below the zero mark on the tape, add the dry length of the graduated foot (cut value) to the held value.

9. Dry the wetted portion of the tape with a towel and repeat the procedure until two depth-to-water measurements agree within 0.02 foot. If two measurements within 0.02 foot cannot be obtained, record the suspected problem on the Field Record Form or Field Record Book.

NOTE: The requirement to obtain a second water level may be waived by the project manager during aquifer testing because the water level in the well may be changing so rapidly that it is not possible to obtain successive measurements within 0.02 foot of each other.

10. When all measurements in a single well are completed, rinse the wetted portion of the tape with distilled or deionized water.

11. Dry the wetted portion of the tape with a towel to prepare it for the next measurement and prevent the tape from rusting. This is required whether the tape has been rinsed or not.

4.2.2 Electrical Water-Level Indicator Method

Position Responsible: RADIATION PROTECTION TECHNOLOGISTS OR TECHNICAL STAFF

Electrical water-level indicators consist of an insulated wire 100 to 1000 feet in length that is graduated in standard increments. A probe, which is attached to the end of the wire, is lowered into the borehole. On contact with the water, the electrical circuit is closed as signaled by an indicator (light or buzzer) at the surface.

9 0 1 1 7 7 4 0 4 4 4

NOTE: If automatic long-term water-level recording equipment is in the well, do not take water-level measurements, unless otherwise instructed by the Project Manager. Note this on the Water-Level Measurement Form or in a Field Record Book.

1. Record the

   - date (1)
   - name of the measuring device (e.g., brand and model of water-level indicator) (2)
   - serial number of electrical water-level indicator (3)
   - name of the person taking the measurements and number of the procedure followed (4)
   - well number (5)

   in the designated space on the Water Level Measurement Form (Figure 2) or in a Field Record Book.

2. Turn on the indicator and turn the sensitivity switch to full sensitivity.

3. Push the test button (if the instrument has one) to see if the battery is charged and the buzzer and light are working.

NOTE: An operational check of the indicator can be performed by dipping the probe in a container of water. Indicator light or buzzer should come on.

4. Lower the probe from the measuring point into the well or borehole until the buzzer or the light indicate contact with the water.

5. Mark the wire at the location adjacent to the measuring point.

6. Measure to the nearest 0.01 foot the distance between the mark (cut value) and the nearest graduation mark (held value) on the wire using a measuring tape that is scaled to hundredths of a foot.

7. Record the

   - held value (6)
   - cut value to the nearest 0.01 foot (7)
   - time of measurement (8)
   - any deviations from the procedure, anomalies, or comments

   in the designated space on the Water Level Measurement Form (Figure 2) or in a Field Record Book.

9 0 1 1 7 7 4 0 4 4 5

8. Calculate and record the depth-to-water on the Water Level Measurement Form (9), or in a Field Record Book.

   If the water level is deeper than the nearest graduation marked on the tape, add the cut value to the held value to obtain the depth to water.

   If the water level is shallower than the nearest graduation marked on the tape, subtract the cut value from the held value to obtain the depth to water.

9. Repeat the procedure until two depth-to-water measurements agree within 0.02 foot. If two measurements within 0.02 foot cannot be obtained, record the suspected problem on the Field Record Form or in a Field Record Book.

NOTE: The requirement to obtain a second water level may be waived by the project manager during aquifer testing because the water level in the well may be changing so rapidly that it is not possible to obtain successive measurements within 0.02 foot of each other.

10. When the probe is removed from the well, rinse the probe and the wetted portion of the wire with distilled or deionized water.

11. Dry the probe and the wetted portion of the wire with a towel. This is required whether the tape has been rinsed or not.

4.3 Computations

Position Responsible: RADIATION PROTECTION TECHNOLOGISTS OR TECHNICAL STAFF

The water-level elevation in a well is obtained by subtracting the depth-to-water from the elevation of the measuring point:

Water level = measuring point elevation - depth-to-water

NOTE: Corrections for thermal expansion and tape stretch caused by the suspended weight of the tape and plumb weight are described by Garber and Koopman (1968). Errors resulting from these effects can become significant at high temperatures and for measured depths in excess of 1000 feet.

5.0 REFERENCES

This procedure was developed in accordance with the techniques described in:

- ASTM. 1988. "Standard Method for Determining Subsurface Liquid Levels in a Borehole or Monitoring Well (Observation Well)." D 4750-87, American Society for Testing and Materials, Philadelphia, Pennsylvania.

9 0 1 1 7 7 4 0 4 4 6

- EPA. 1986. Resource Conservation and Recovery Act (RCRA) Ground-Water Monitoring Technical Enforcement Guidance Document. National Technical Information Service, Springfield, Virginia.

- USGS. 1977. National Handbook of Recommended Methods for Water Data Acquisition. Office of Water Data Coordination, Reston, Virginia.

Other references used were:

- Garber, M. S. and F. C. Koopman. 1968. Methods of Measuring Water Levels in Deep Wells: U.S. Geological Survey TRWI, Book 8, Chap. A-1. U.S. Government Printing Office, Washington, D.C.

- PNL. 1988. Hanford Wells. PNL-5397, Pacific Northwest Laboratory, Richland, Washington.

9011774047

THIS PAGE INTENTIONALLY
LEFT BLANK

9 0 1 1 7 7 4 0 4 4 8

WL-2 PROCEDURE FOR STANDARDIZING STEEL TAPES

1.0 APPLICABILITY

This procedure applies to the standardization of steel tapes used to measure water levels. Graduated steel tapes used to measure water levels in wells are compared to steel tapes that have been calibrated by the Hanford Engineering Development Laboratories (HEDL) standards laboratory. Graduated steel tapes cannot be adjusted for deviations from the standard length. Deviations between a calibrated tape and the HEDL laboratory standard and deviations between the calibrated tape and field tapes will be recorded so that field measurements can be corrected to a standard length if required.

2.0 DEFINITIONS

- Calibrated steel tape - a graduated steel tape whose accuracy has been determined by the HEDL standards laboratory and is used only to standardize field tapes.
- Standard steel tape - a graduated steel tape (field tape) that has been standardized against a calibrated steel tape and is used routinely to measure depth to water in a well.
- Field tape - a graduated steel tape that is used routinely to measure depth to water in a well.

3.0 RESPONSIBLE STAFF

- Technical Staff.

4.0 PROCEDURE

One 500-foot steel tape (calibrated steel tape) will be calibrated annually by the HEDL standards laboratory to ±0.005 foot per 100-foot length of tape. This steel tape is marked "For Standardization Only" and will be used along with this procedure to standardize the steel tapes used in the field. Field tapes will be standardized before initial use and once every 3 months while they are in use.

The 300-foot and 500-foot graduated steel tapes to be used to routinely measure water levels in wells will be compared to a calibrated steel tape in well 699-32-62.

The 200-foot graduated steel tapes to be used to routinely measure water levels in wells will be compared to a calibrated steel tape in well 699-S8-19.

4.1 Prerequisites

4.1.1 Equipment

The following equipment will be needed:

- graduated steel measuring tape that has been calibrated by the HEDL standards laboratory (calibrated steel tape)
- field-use graduated steel tape
- electric water level indicator (optional)
- recent copy of Hanford Wells (PNL-5397)
- two stainless steel weights, of approximately equal weight, one to be attached to each steel tape
- carpenter's chalk
- Water Level Measurement Form
- towel
- wash bottle containing distilled or deionized water.

The following safety equipment is required for standardizing graduated steel tapes:

- leather gloves
- steel-toed shoes.

4.1.2 Safety Precautions

Leather gloves shall be worn while standardizing a steel tape. Steel-toed shoes are to be worn at all times in the field.

4.2 Step-by-Step Instructions

Position Responsible: TECHNICAL STAFF

1. Record the

   - date
   - calibrated steel tape identifier
   - identifier of the steel tape being standardized
   - name of the person taking the measurements
   - well number

   on a Water Level Measurement Form (Figure 1).

0 9 0 1 1 7 7 4 0 4 5 0

Date _____ Page _____

Measuring Device _____

Measured By _____

Well Number	Time (PST)	Held	Cut	D/W or PSI

FIGURE 1. Water Level Measurement Form

2. Attach weights of approximately 8 ounces to the end of the calibrated steel tape and the tape to be calibrated.

3. Find the elevation of the measuring point and the estimated water level in Hanford Wells (or equivalent) or use an electric tape to find the approximate depth to water.

4. Chalk the 1-foot section of the calibrated steel tape that is graduated in tenths or hundredths of a foot.

5. Lower the calibrated steel tape from the well's measuring point (marked with paint on the top of the casing) to the estimated water level. To avoid splashing at the water surface, lower the tape slowly into the water.

6. Once the estimated water level has been reached, hold the nearest foot mark (held value) against the measuring point on the casing, and without allowing the tape to move any farther into the well, remove the tape from the well.

7. If the water level can be observed on the chalked portion of the tape, read the distance between the zero mark on the tape and the wet line (cut value) to the nearest 0.01 foot. If none of the chalked portion is wet, repeat the procedure, but allow more of the tape to go down the well (i.e., use a greater held value).

   If all of the chalked portion of the tape is wet, dry the tape, rechalk it, and repeat the procedure allowing less tape to go down the well (i.e., use a lesser held value).

   Continue adjusting length of tape suspended in the well until the water level can be observed on the chalked portion of the tape.

8. Record the

   - held value
   - cut value to the nearest 0.01 foot
   - time of measurement

   on the Water Level Measurement Form (Figure 1).

9. Calculate and record the depth-to-water on the Water Level Measurement Form.

   When using a steel tape with the section marked in tenths or hundredths of a foot between zero and 1 foot on the tape, subtract the wetted portion of the tape (cut value) from the held value.

   When using a steel tape with the section marked in tenths or hundredths of a foot below the zero mark on the tape, add the dry length of the graduated foot (cut value) to the held value.

10. Dry the wetted portion of the tape and repeat the procedure until two depth-to-water measurements agree within 0.02 foot. If two measurements within 0.02 foot cannot be obtained, record the suspected problem on the Water Level Measurement Form.

11. Repeat Steps 1 through 10 using the tape to be standardized (field tape).

12. Record the difference between the depth to water measured with the two tapes on the Water Level Measurement Form.

13. When all measurements are completed, rinse the wetted portion of each tape with distilled or deionized water.

14. Dry the wetted portion of each tape with a towel to prepare it for the next measurement and to prevent the tape from rusting.

4.3 Determination of Acceptability of Steel Tapes

Position Responsible: TECHNICAL STAFF

If the field tape deviates in length from the calibrated steel tape by less than 0.10 foot, attach a Standardization tag (Figure 2) to the tape, which indicates the date of standardization, name of the person performing the standardization, and the amount of deviation between the calibrated tape and the field tape. These tapes may be used for making water-level measurements.

If the field tape deviates in length from the standard by more than 0.10 foot but less than 0.25 foot, attach a Standardization tag (Figure 2) to the tape. Put an "X" through the top portion of the Standardization tag, write "**For Tagging Only**" on the bottom of the tag, and sign the tag as shown in Figure 3.

If the field tape deviates in length from the standard tape by more than 0.25 foot, mark the tape "**Not Standardized, For Indication Only.**" Activities for which "Indication Only" tapes can be used will be identified in sampling and analysis plans for projects where they can be used.

5.0 REFERENCES

This procedure was developed in accordance with the techniques described in

- ASTM. 1988. Annual Book of ASTM Standards. Volume 04.08, Standard D 4750-87, American Society for Testing and Materials, Philadelphia, Pennsylvania.

- EPA. 1986. Resource Conservation and Recovery Act (RCRA) Ground-Water Monitoring Technical Enforcement Guidance Document. OSWER 9950.1, U.S. Environmental Protection Agency, Washington, D.C.

Steel Tape Standardization
Last Standardization Date Next Standardization Date Standardization performed by
Deviation From Calibrated Tape

FIGURE 2. Example of a Standardization Tag

Steel Tape Standardization
~~Last Standardization Date~~ ~~Next Standardization Date~~ Standardization performed by JP Doe
Deviation From Calibrated Tape For Tagging Only

FIGURE 3. Example of a Standardization Tag for Steel Tapes to be Used for Tagging Only

- USGS. 1977. National Handbook of Recommended Methods for Water Data Acquisition. Office of Water Data Coordination, Reston, Virginia.

Other references:

- PNL. 1988. Hanford Wells. PNL-5397, Pacific Northwest Laboratory, Richland, Washington.

WL-3 INSTALLATION, OPERATION, AND REMOVAL OF THE INSTRUMENTATION NORTHWEST DATA LOGGER AND PRESSURE TRANSDUCER WITH AN IBM COMPATIBLE TERMINAL DEVICE

1.0 APPLICABILITY

This procedure applies to personnel installing, operating, or removing Instrumentation Northwest data logging equipment for water-level monitoring. The data logger and pressure transducer are used to automatically measure and record pressure head at a point in a water column at discrete time intervals unattended. The equipment can be used to determine long-term piezometric head in an aquifer or surface water body or determine water-level changes during aquifer testing.

2.0 DEFINITIONS

- Data logger - a field computer that operates a transducer and records the measurements
- Transducer - an electro-mechanical device for measuring water pressure
- Breakout box - a unit that houses the connectors for the RS232C cable and provides a security check for communicating with the data loggers.

3.0 RESPONSIBLE STAFF

- Project Manager
- Technical Staff.

4.0 PROCEDURE

4.1 Prerequisites

4.1.1 Equipment

The following equipment will be needed when monitoring water levels using an Instrumentation Northwest data logger:

- equipment outlined in Procedure WL-1 for measuring depth-to-water using a graduated standard steel tape and an electric water-level indicator
- Instrumentation Northwest Terra 8/D® (downhole version) or Terra 8® data logger, each with a Yuasa® 2x6 volt rechargeable battery
- Instrumentation Northwest operation and technical manual

- Instrumentation Northwest pressure transducer with attaching cable and coupling wound on a spool
- pressure transducer cable extensions with attached couplings wound on a spool
- break-out box
- 1 10-pin input to 3 6-pin output pigtail
- RS232C cable
- terminal device with a screen and a keyboard (e.g., portable laptop computer)
- Terrabasic® program and data storage disks
- duct tape or clamping device to secure transducer cable
- Equipment Record Form (Figure 1)
- records of previous high and low water-level measurements
- wash bottle containing distilled or deionized water.

NOTE: A wash bottle with distilled or deionized water is required to decontaminate the pressure transducer and the portion of the cable that penetrates the water before installation and following removal of equipment.

NOTE: The 1 10-pin input to 3 6-pin output pigtail is only needed if the Terra 8/D data logger is used. A pigtail is needed for each Terra 8/D unit. The Terra 8 unit does not require a pigtail.

NOTE: The selected full range of the pressure transducer depends on the water-level change expected over the monitoring duration. The water-level change expected should be within the full scale output of the transducer.

4.1.2 Calibration

The pressure monitoring devices must be calibrated by comparison with a national standard. Calibration records shall be maintained by the equipment custodian.

The following equipment shall have calibration documentation that supports the stated requirements.

1. Submersible pressure transducers shall have calibration points of 0, 10%, 30%, 50%, 70%, 90%, and 100% of full-scale range and a

9 0 1 1 7 7 4 0 4 5 6

Equipment Record Form for the Installation and Removal of the Instrumentation Northwest Data Loggers and Pressure Transducers

Initial Check:		
Purpose of Installation:		
Monitored Hydrologic Unit or Water Body:		
Date/Time of Installation:	Procedure Followed:	
Data Logger Make/Model:		
Serial No.:	Number of Channels Used:	
Pressure Transducer Make/Model:	Full Scale Range:	Well No.:
	Serial No.:	Depth:
Pressure Transducer Make/Model:	Full Scale Range:	Well No.:
	Serial No.:	Depth:
Description of Data Logger Installation and Well Head Configuration:		
Comments:		
Equipment Installed By		
Date/Time of Equipment Removal:		
Decontamination Procedure (if required):		
Equipment Removed By		

FIGURE 1. Equipment Record Form

9011774045 7

maximum point above 100% of full-scale range. The maximum point shall be 3 times the hysteresis (as specified by the manufacturer) above 100% of full-scale range. The calibration run shall increase from 0 to the maximum point, then decrease from the maximum point to 0. This run will be used to determine linearity and hysteresis.

2. The data loggers shall be calibrated at 0, 10%, 30%, 50%, 70%, 90%, and 100% of the full-scale transducer voltage output. These calibration points shall be run at an ambient room temperature of 22 ± 5° C. The data logger and pres-sure transducer may be calibrated together as a dedicated unit or calibrated as separate units, depending on the data collection objective and how the equipment will be used. Three calibration runs shall be conducted for each instrument to determine repeatability.

The data loggers and pressure transducers must be calibrated every 12 months. If the duration of data collection exceeds 12 months, then monthly water-level measurements shall be collected using a standard steel tape during the data collection period. When data collection is completed, the data logger and pressure transducer shall be calibrated.

4.1.3 Safety Precautions

Handle the data logging equipment and terminal device with care, and keep the equipment free of dirt and contamination.

Cable extending from the transducer installation to the data recording equipment at the surface should be arranged to minimize the possibility of tripping. Excess cable should be reeled on a spool or coiled out of the way of the work area. Electrical cords and connections should be protected from vehicular traffic and other equipment and should be inspected and replaced before use if damaged. Electrical connections and recorders should be kept out of water.

The following safety equipment is required for installing or removing water-level monitoring equipment:

- gloves
- steel-toed shoes
- hard hat when working near drilling or pump setting rigs.

4.1.4 Training

Personnel responsible for installing, operating, and removing pressure measurement equipment at monitoring sites must be previously instructed in these matters by experienced staff members and must record the information in accordance with this procedure. Personnel must also be trained in operating the Instrumentation Northwest data loggers. In addition, it is required that personnel read the Instrumentation Northwest operations and technical manual

and fully understand use of the equipment before actual field use. Occasionally, it may be necessary to consult with the equipment manufacturer to obtain updated information regarding improvements to the operations and technical manual if there are problems with equipment operation.

4.2 Step-by-Step Instructions

Position Responsible: TECHNICAL STAFF

4.2.1 Initial Check

The initial check is used only as a guide to prevent potential problems in the field or if there is reason to believe the equipment may not work properly. However, it is strongly recommended that the equipment is tested in the lab before field use. Also, it is recommended that the program configuration is modified in the lab before field use.

Consult the Instrumentation Northwest operations and technical manual if necessary.

1. Check that the terminal device has good batteries or, if rechargeable, is fully charged.

2. Check the main 6x2 volt battery's voltage under a load (i.e., while the system is in "wake" mode).

3. Make sure the Terrabasic program runs free of errors with the program configuration that will be used during field data acquisition. It is recommended that the most updated program version be used.

4. Submerse the probe in a container of clean water to see if the sensor is operating correctly.

5. If the equipment checks show that all equipment is properly functioning, document this on the Equipment Record Form.

4.2.2 Installation

1. Measure and record the water level with a standard steel tape according to Procedure WL-1.

2. Rinse the pressure probe and the portion of the cable that penetrates the water with distilled or deionized water, and lower it to the desired depth. It should be placed below the lowest expected water level, but should not be allowed to exceed its full-scale range. The full-scale range in feet can be determined by multiplying the pressure range by 2.31. For example, 10 psi x 2.31 equals a range of approximately 23 feet.

NOTE: If the pressure transducer or cable extension coupling becomes "hung up" in the well as a result of an existing pump with a pipe column and wiring, do not pull on the cable excessively in an attempt to free the probe. Excessive pulling may strip the transducer from the cable. Contact the Project Manager to have other authorized personnel remove the pipe column to retrieve the transducer.

3. Secure the cable with duct tape or clamping device so that the probe will remain at the desired depth.

NOTE: The Terra 8/D or Terra 8 data logger should be protected from the elements and should not be immersed in water. Make sure that the unit is not positioned in such a manner that will attract a lightning strike. Furthermore, do not place the unit and connecting equipment near high-tension wires or cable carrying high voltage or high current.

The Terra 8 unit (downhole version) may be installed in a 4-in. or greater diameter well if sufficient space is available. If the diameter of the well is greater than 4 in., and the equipment is installed in the well, it is necessary to secure the unit to the wellhead.

4. Record the following on a Equipment Record Form, shown in Figure 1:

   - purpose of installation
   - well number
   - monitored hydrologic unit or water body
   - number of procedure followed
   - make/model and serial number of data logger
   - number of channels used
   - make/model, serial number, and full scale range of pressure transducer
   - depth of transducer
   - name of person installing the equipment
   - description of data logger installation and well head configuration
   - comments.

NOTE: It is important to record on the Equipment Record Form other pertinent information in the "comments" section of the Equipment Record Form. This information includes the name of the Terrabasic program, parameters used in the program configuration, and a record of data dumped throughout the duration of data acquisition. The time of data dump and the name of the data file shall be recorded when the data are dumped. The parameters used in the program configuration include the measurement time interval and number of logs per timestamp. Also record any problems encountered while installing or setting up the equipment.

If more than two channels are used, record the information on an additional Equipment Record Form.

4.2.3 Equipment Setup and Operation

The equipment should be configured as shown in Figure 2. For each step below, consult the Instrumentation Northwest operations and technical manual.

NOTE: Steps 7 and 8 are primarily for periodic data dumping during long-term data collection. These steps can be ignored during the initial setup and operation or if enough memory in the data logger is available for the ensuing data collection period.

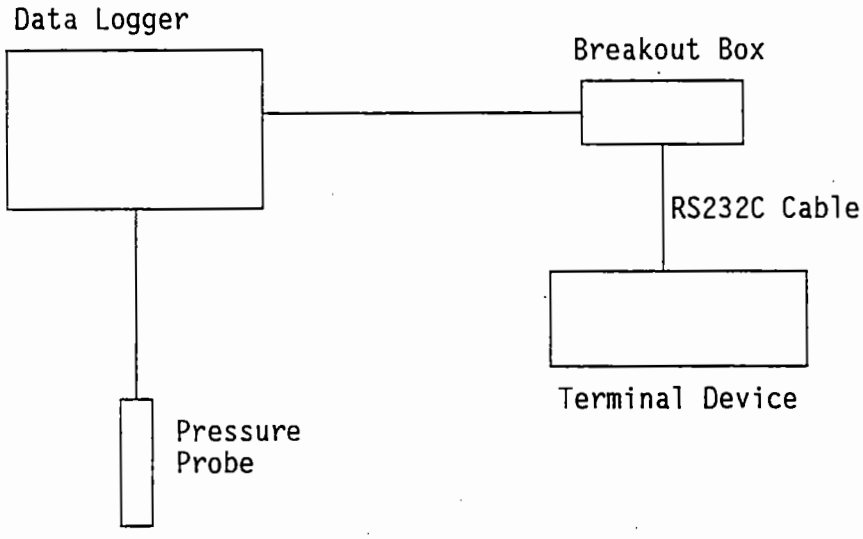

FIGURE 2. Configuration of Equipment

1. Attach the RS232C cable from the terminal device to the RS232C connector on the breakout box.

2. Attach the 26-pin circular connector from the breakout box to the I/O port on the data logger unit.

3. Attach the transducer cable to the channel port on the Terra 8/D or Terra 8 units. The Terra 8/D requires a 1 10-pin input to 3 6-pin output pigtail.

4. Turn power on to the terminal device.

5. Get into terminal emulation mode.

6. Press the "wake" button on the breakout box. This will illuminate the LED on the breakout box.

7. Save any existing data by dumping it from the data logger to the data disk. Refer to the Instrumentation Northwest operations and technical manual for details on performing this step.

8. After all the data have been saved to disk, then clear the data from memory in the data logger by using the "reset" command. This will allow memory space for the next data collection period.

CAUTION: Use the "reset" command with great care. It destroys all previously collected data stored in the data logger memory. It is highly recommended that all the data saved on disk are loaded and viewed before clearing from the data logger memory. This will ensure that all data stored in the data logger memory have been saved to disk and can be accessed. Step 8 should <u>never</u> be performed without first performing Step 7.

9. Check and, if necessary, reset the time.

10. Make any necessary changes (which were not made during the initial check) to the program configuration and run the program. Correct any program errors.

11. Issue the command to begin data collection.

12. Check to make sure the instrument is operating properly. If the sample interval is greater than 5 seconds, then the LED light on the breakout box will turn off, indicating that the data logger has entered "sleep" mode. This will ensure that the instrument is operating properly. Also, if the program configuration was specified to log time and reading to the terminal screen as well as to memory, then the stored data can be viewed as acquired.

NOTE: If the sample interval is 5 seconds or less, then the data logger will not enter "sleep" mode and the LED will remain illuminated. In this

9 0 1 1 7 7 4 0 4 6 2

case, the data logger is unable to log the time and reading to the terminal screen, even if it is specified to do so in the program configuration. There is no possible way of ensuring that the instrument is operating properly while collecting data this frequently.

13. Turn power off to computer.

14. Disconnect the RS232C cable from the terminal device.

15. Disconnect the 26-pin circular connector from the I/O port on the data logger unit.

The last two steps are not necessary when monitoring water levels during hydrologic testing until the test is completed, as long as the breakout box and terminal device are protected. The cables can be disconnected at the end of the test after all data have been collected.

4.2.4 Data Conversion

The data loggers apply a conversion of the form $y = mx + b$ to the voltage (ranges from 0 to 5 volts) that appears at the Analog/Digital converter, where m is the multiplier and b is the offset in the configuration section of the program. The conversion factor m depends on the full-scale range of the transducers and can be calculated as follows:

$$m = (\text{full-scale range in psi}) \times (2.31 \text{ ft/psi})/5 \text{ volts}$$

For example, m is 2.31 for a 0-5 psi transducer, 4.62 for a 0-10 psi transducer, and 6.93 for a 0-15 psi transducer. This yields hydraulic head in units of feet above the probe, assuming $b = 0$.

Once m has been entered into the program configuration, the offset, b, can be used to correct water levels to elevation and can be calculated as follows:

$$b = \text{top of casing elevation} - \text{depth to water} - \text{transducer reading at } b = 0$$

for installation in a well and

$$b = \text{water surface elevation} - \text{transducer reading at } b = 0$$

for installation in a surface water body.

The values for m and b will be recorded automatically on the data output.

4.2.5 Removal

1. Follow Steps 1 through 8 in Section 4.2.3 on equipment setup and operation.

NOTE: Steps 7 and 8 may be performed in the lab or office after all equipment has been removed.

2. Follow Steps 11 through 15 in Section 4.2.3.

3. Remove transducer. If the transducer is in a well with a pump and pipe column, remove the probe slowly to prevent it from being stripped from the cable if it becomes stuck.

4. If the pressure transducer and cable require decontamination, record the decontamination procedure used on the Equipment Record Form.

5. Record the following on the Equipment Record Form:

   - date and time the equipment was removed
   - decontamination procedure (if required)
   - name of person removing the equipment.

6. Measure and record the water level with a standard steel tape according to Procedure WL-1.

5.0 REFERENCE

- Terrascience Systems Ltd. "Operations and Technical Manual, Terra 8 Datalogger." Terrascience Systems Ltd., Vancouver, BC, Canada.

9 0 1 1 7 7 4 0 4 6 4

WL-4 INSTALLATION, OPERATION, AND REMOVAL OF A DATA LOGGER AND PRESSURE TRANSDUCER

1.0 APPLICABILITY

This procedure applies to the installation, operation, or removal of data logging equipment for water-level monitoring, except for Instrumentation Northwest (INW) Data Logger. INW data loggers are discussed in Procedure WL-3. A data logger and pressure transducer are used to automatically measure and record pressure head at a point in a water column at discrete time intervals unattended. The equipment can be used to determine long-term piezometric head in an aquifer or surface water body or determine water-level changes during aquifer testing.

2.0 DEFINITIONS

- Data logger - a field computer that operates a transducer and records the measurements
- Pressure transducer - an electro-mechanical device for measuring water pressure.

3.0 RESPONSIBLE STAFF

- Project Manager
- Technical Staff.

4.0 PROCEDURE

4.1 Prerequisites

4.1.1 Equipment

The following equipment will be needed when monitoring water levels using a data logger:

- equipment outlined in Procedure WL-1 for measuring depth-to-water using a graduated standard steel tape and an electric water-level indicator
- data logger with appropriate power device
- data logger's operation and technical manual
- pressure transducer and attaching cable with coupling, if necessary, wound on a spool
- pressure transducer cable extensions, if necessary, with attached couplings wound on a spool
- cable connecting data logger to terminal device, if necessary

- terminal device with a screen and a keyboard (e.g., portable laptop computer), if necessary
- program and data storage disks, if necessary
- housing for protecting data logger from weather conditions, if necessary
- duct tape or clamping device to secure transducer cable
- Equipment Record Form (Figure 1)
- records of previous high and low water-level measurements
- wash bottle containing distilled or deionized water.

NOTE: A wash bottle with distilled or deionized water is required to decontaminate the pressure transducer and the portion of the cable that penetrates the water before installation and following removal of equipment.

NOTE: The selected full range of the pressure transducer depends on the water-level change expected over the monitoring duration. The water-level change expected should be within the full scale output of the transducer.

4.1.2 Calibration

Calibration of new or leased data loggers and transducers is not necessary provided that a calibration certification or calibration report is obtained from the manufacturer or lessor and it is approved by the Process Quality Department. The data loggers and pressure transducers must be calibrated every 12 months. If the duration of data collection exceeds 12 months, then monthly water-level measurements shall be collected using a standard steel tape during the data collection period. The pressure monitoring devices must be calibrated by comparison with a national standard. Calibration records shall be maintained by the equipment custodian.

The following equipment shall have calibration documentation that supports the stated requirements:

1. Submersible pressure transducers shall have, at a minimum, calibration points of 0, 10%, 30%, 50%, 70%, 90%, and 100% of full-scale range and a maximum point above 100% of full-scale range. The maximum point shall be three times the hysteresis (as specified by the manufacturer) above 100% of full-scale range. The calibration run shall increase from 0 to the maximum point,

Equipment Record Form for the Installation and Removal of Data Loggers and Pressure Transducers

Initial Check:		
Purpose of Installation:		
Monitored Hydrologic Unit or Water Body:		
Date/Time of Installation:	Procedure Followed:	
Data Logger Make/Model:		
Serial No.:	Number of Channels Used:	
Pressure Transducer Make/Model:	Full Scale Range:	Well No.:
	Serial No.:	Depth:
Pressure Transducer Make/Model:	Full Scale Range:	Well No.:
	Serial No.:	Depth:
Description of Data Logger Installation and Well Head Configuration:		
Comments:		
Equipment Installed By		
Date/Time of Equipment Removal:		
Decontamination Procedure (if required):		
Equipment Removed By		

FIGURE 1. Equipment Record Form

9011774046 7

then decrease from the maximum point to 0. This run will be used to determine linearity and hysteresis.

2. The data loggers shall be calibrated, at a minimum, at 0, 10%, 30%, 50%, 70%, 90%, and 100% of the full-scale transducer voltage output. These calibration points shall be run at an ambient room temperature of 22 ± 5°C. The data logger and pressure transducer may be calibrated together as a dedicated unit or calibrated as separate units, depending on the data collection objective and how the equipment will be used. Three calibration runs shall be conducted for each instrument to determine repeatability.

4.1.3 Safety Precautions

Handle the data logging equipment and terminal device with care, and keep the equipment free of dirt and contamination.

Arrange cable extending from the transducer installation to the data recording equipment at the surface to minimize the possibility of tripping. Reel excess cable on a spool or coil it out of the way of the work area. Protect electrical cords and connections from vehicular traffic and other equipment and inspect and replace them before use if damaged. Keep electrical connections and recorders out of water.

The following safety equipment is required for installing or removing water-level monitoring equipment:

- gloves
- steel-toed shoes
- hard hat when working near drilling or pump setting rigs.

4.1.4 Training

Personnel responsible for installing, operating, and removing pressure measurement equipment at monitoring sites must be previously instructed in these matters by experienced staff members and must record the information in accordance with this procedure. Personnel must also be trained in operating the data loggers. In addition, it is required that personnel read the operation and technical manual and fully understand use of the equipment before actual field use.

4.2 Step-by-Step Instructions

Position Responsible: TECHNICAL STAFF

4.2.1 Initial Check

The initial check is used only as a guide to prevent potential problems in the field or if there is reason to believe the equipment may not work properly. However, it is strongly recommended that the equipment be tested in

the lab before field use. If there are problems with equipment operation, it may be necessary to consult with the distributor or manufacturer.

Consult the operation and technical manual if necessary.

1. If necessary, check that the terminal device has good batteries or, if rechargeable, is fully charged.

2. If the system is powered by a battery, check the voltage under a load (i.e., while the system is on), if possible.

3. Check to make sure all cable connections fit together properly.

4. Make sure the program runs free of errors with the program configuration that will be used during field data acquisition. It is recommended that the most updated program version be used.

5. Submerse the probe in a container of clean water to see if the sensor is operating correctly.

6. If the equipment check shows that all equipment is functioning properly, document this on the Equipment Record Form by initial and date.

4.2.2 Installation

1. Measure and record the water level with a standard steel tape according to Procedure WL-1.

2. Lower the pressure probe to the desired depth. It should be placed below the lowest expected water level, but should not be allowed to exceed its full-scale range. The full-scale range in feet can be determined by multiplying the pressure range in psi by 2.31. For example, 10 psi x 2.31 equals a range of approximately 23 ft.

NOTE: If the pressure transducer or cable extension coupling becomes "hung up" in the well as a result of an existing pump with a pipe column and wiring, do not pull on the cable excessively in an attempt to free the probe. Excessive pulling may strip the transducer from the cable. Contact the Project Manager to have other authorized personnel remove the pipe column to retrieve the transducer.

3. Secure the cable with duct tape or a clamping device so that the probe will remain at the desired depth.

NOTE: The data logger should be protected from the elements and should not be immersed in water. Make sure that the unit is not positioned in such a manner that will attract a lightning strike. Furthermore, do not place the unit and connecting equipment near high-tension wires or cable carrying high voltage or high current.

Some data loggers may be installed in a 4-in. or greater diameter well if sufficient space is available. In this case, it may be necessary to secure the unit to the wellhead.

4. Record the following on a Equipment Record Form, shown in Figure 1:

   - date and time of installation
   - purpose of installation
   - well number
   - monitored hydrologic unit or water body
   - number and revision of procedure followed for installation
   - make/model and serial number of data logger
   - number of channels used
   - make/model, serial number, and full scale range of pressure transducer
   - depth of transducer
   - name of person installing the equipment
   - description of data logger installation and well head configuration
   - comments.

NOTE: It is important to record on the Equipment Record Form other pertinent information in the "comments" section of the Equipment Record Form. This information includes the name of the program, parameters used in the program configuration, and a record of data dumped throughout the duration of data acquisition. The time of data dump and the name of the data file shall be recorded when the data are dumped. Also record any problems encountered while installing or setting up the equipment. If a detailed program is inputted to the data logger by hand, attach to the Equipment Record Form input parameters and their values.

If more than two channels are used, record the information on an additional Equipment Record Form.

4.2.3 Equipment Setup and Operation

Consult the data loggers operation and technical manual for setup and operation.

9 0 1 1 7 7 4 0 4 7 0

CAUTION: Most data loggers have a command that destroys all previously collected data stored in the data logger's memory. It is highly recommended that all the data be saved on disk and, if possible, are loaded and viewed before clearing from the data logger memory. This will ensure that all data stored in the data logger memory have been saved to disk and can be accessed.

NOTE: Stored data do not have to be dumped for the initial setup and operation or if enough memory in the data logger is available for the ensuing data collection period. Also, measure and record the water level with a standard steel tape according to Procedure WL-1 each time data are dumped during long-term data collection. In some cases it may not be possible to measure the water level in a well if the data logger is installed in the well head.

4.2.4 Data Conversion

For some data loggers, it may be necessary to apply a conversion of the form

$$y = mx + b$$

to the electronic output signal x, where m is the slope, b the y axis intercept, and y the converted transducer reading. Applying this conversion will allow data to be stored in feet from a referenced datum (e.g., mean sea level). The conversion factor m depends on the full scale range of the transducer. Consult the data logger's operation and technical manual to determine the value for m.

Once m has been determined, the intercept, b, can be used to correct water levels to elevation above mean sea level (MSL). This can be calculated as follows:

for installation in a well,

b = transducer elevation = top of casing elevation - depth to water - height of water-level above transducer

and, for installation in a surface water body,

b = transducer elevation = water surface elevation - height of water level above transducer.

Record the values for m and b on the Equipment Record Form.

4.2.5 Removal

Before removing the transducer, terminate data collection according to the method described in the data logger's operation and technical manual. Do not erase any stored data.

Disconnect equipment according to the method described in the operation and technical manual.

1. Remove transducer. If the transducer is in a well with a pump and pipe column, remove the probe slowly to prevent it from being stripped from the cable if it becomes stuck.

2. If the pressure transducer and cable require decontamination, record the decontamination procedure used on the Equipment Record Form.

3. Record the following on the Equipment Record Form:

   - date and time the equipment was removed
   - name of person removing the equipment.

4. Measure and record the water level with a standard steel tape according the Procedure WL-1.

NOTE: If the pressure transducer and cable are not decontaminated after removal or after returning to the laboratory, a marked tag must be attached to the probe to identify it for decontamination.

5.0 REFERENCES

- Procedure WL-1, "Water-Level Measurement Procedure."

WL-5 PROCEDURE TO DETERMINE THE PRECISION OF ELECTRICAL WATER-LEVEL INDICATORS

1.0 APPLICABILITY

This procedure applies to electrical water-level indicators that will be used to measure depth to water during hydrologic tests in which depth-to-water measurements will be made. The procedure will be followed before such tests are conducted. Depth-to-water measurements are made several times to verify that precision requirements of ±0.04 foot are met. Standardization of electrical water-level indicators for accuracy is not included in this procedure.

2.0 DEFINITIONS

- Electrical water-level indicator - a device used to measure the depth-to-water surface in a well. A light and/or sound indicates when the water surface is contacted.

- Standard engineer's tape - a measuring tape graduated in feet, tenths of feet, and hundredths of feet.

- Precision - a measure of mutual agreement among individual measurements of the same property, usually under prescribed similar conditions.

3.0 RESPONSIBLE STAFF

- Project Hydrologist
- Well-Site Geologist
- Technical Staff.

4.0 PROCEDURE

4.1 Prerequisites

4.1.1 Equipment

The following equipment will be needed when verifying electrical water-level indicators:

- electrical water-level indicator
- standard engineer's tape
- Aquifer Test Data sheet (Figure 1).

Aquifer Test Data

page ________ of ________

Data for Well ________
Pumping Well ________
Observation Wells ________

Location ________
Type of Aquifer Test ________
How Q Measured ________
How W.L.'s Measured ________
Rad./Dist. of/From Pumping Well ________
Meas. Point for W.L.'s ________
Elevation of Meas. Point ________

Depth of Pump/Airpipe ________
Pump On: date ________ time ________
Pump Off: date ________ time ________
Duration of Aquifer Test ________

Time t = ______ at t' = 0					Water Level Data Static Water Level ________					Discharge		Recorded By	Comments
Day	Clock Time	t	t'	t/t'	Reading	Conversions or Corrections	Water Level	s or s'		Read-ing	Q		

FIGURE 1. Aquifer Test Data Sheet

4.1.2 Safety Precautions

Follow the safety requirements identified in the Health and Safety Plan, if one exists, and refer to safety precautions identified within the appropriate Aquifer Testing procedures.

4.2 Step-By-Step Instructions

Position Responsible: PROJECT HYDROLOGIST, WELL-SITE GEOLOGIST, OR TECHNICAL STAFF

NOTE: The electrical water-level indicator(s) to be used will be verified for precision by lowering the sensor into the well or wells before aquifer testing. The hydraulic head in the well must be in a static condition when the verification measurements are made. The verification measurements for a particular indicator should be made in the same well or wells in which measurements will be made with that indicator during testing.

1. Record the

   - date and time
   - name of person making measurements
   - number of this procedure
   - location and well number (or temporary well number)

   on the Aquifer Test Data sheet.

2. Turn on the indicator and turn the sensitivity switch to full sensitivity.

3. Push the test button (if the instrument has one) to see if the battery is charged and the buzzer and light are working.

NOTE: An operational check of the indicator can be performed by dipping the probe in a container of water. The indicator light or buzzer should come on.

4. Lower the probe from the measuring point into the well or borehole until the buzzer or light indicates contact with the water. All measurements shall be made in a consistent manner.

5. Mark or hold the wire at the location adjacent to the measuring point (cut value).

6. Measure to the nearest 0.01 foot the distance between the mark (cut value) and the nearest permanent graduation mark (permanent marked value) on the wire using a standard engineer's tape.

9 0 1 1 7 7 4 0 4 7 5

7. Record the

   - permanent marked value
   - cut value to the nearest 0.01 foot
   - time of measurement

   on the Aquifer Test Data sheet.

8. Calculate and record the depth-to-water on the Aquifer Test Data sheet.

   If the water level is deeper than the nearest graduation marked on the tape, add the cut value to the permanent marked value to obtain the depth-to-water.

   If the water level is shallower than the nearest graduation marked on the tape, subtract the cut value from the permanent marked value to obtain the depth-to-water.

9. Repeat steps 6 through 8 five times, for a total of six measurements.

4.3 Determination of Acceptability of Electrical Water-Level Indicators

Position Responsible: PROJECT HYDROLOGIST, WELL-SITE GEOLOGIST, OR TECHNICAL STAFF

If the difference between the smallest and greatest depth-to-water measurements agree within 0.04 foot, the electrical water-level indicator can be used to measure water levels during hydrologic testing. If they do not agree within 0.04 foot, the electrical water-level indicator cannot be used, and the procedure must be repeated until a water-level indicator is found that meets these precision requirements. Record the name and serial number of the electrical water-level indicator chosen for use (meeting the precision requirements) on the Aquifer Test Data sheet.

5.0 REFERENCES

- Procedure WL-1, "Water-Level Measurement Procedure."
- Procedure AT-4, "Well Development Before Hydrologic Testing."
- Procedure AT-5, "Constant Discharge Test."
- Procedure AT-6, "Aquifer Slug Injection and Withdrawal Test."

9011774047 6

DO-1 COLLECTION AND DOCUMENTATION OF BOREHOLE SAMPLES AND WELL CONSTRUCTION DATA

1.0 APPLICABILITY

This procedure applies to work performed by well-site geologists monitoring well drilling and well construction activities. It provides standardized methods for the collection and documentation of borehole samples and well construction data. This procedure can be applied independent of the well drilling and construction methods used, but has been written specifically with cable tool methods in mind.

This procedure does not cover special requirements needed for handling potentially contaminated borehole samples.

2.0 DEFINITIONS

N/A

3.0 RESPONSIBLE STAFF

- Project Manager
- Well-Site Geologist(s)
- Senior Technical Reviewer.

4.0 PROCEDURE

4.1 Prerequisites

4.1.1 Equipment

- Geologist's Kit (Munsel Color Charts, Grain Size Charts, millimeter scale, hand lens, 10% HCl, etc.)
- sample labels
- permanent marker (Sharpies)
- sample containers
- plastic bags
- sealing tape (white)
- 5-gallon bucket(s)
- applicable forms
- electrical water level indicator (E-tape)
- steel tape.

9011774047 7

4.1.2 Safety Precautions

The following safety equipment is recommended as a minimum. Additional safety equipment may also be required as specified in the project's Site Safety Plan and/or by the Project Manager:

- leather gloves
- steel-toed boots
- hard hat
- safety glasses.

4.2 Step-by-Step Instructions

4.2.1 General

Position Responsible: WELL-SITE GEOLOGIST

The Well-Site Geologist records borehole sample descriptions and well construction data daily for each well on a Well Completion/Inspection Report (Figure 1), As-Built Diagram (Figure 2), and Drill Log (Figure 3), designating nonapplicable items as "N/A."

1. Use one Well Completion/Inspection Report (Figure 1) for each well. Update this form daily. Record the following information, and where applicable indicate acceptance of these items (refer to Attachment 1 for details on how to complete this form):

   - general project and well information
   - drilling method
   - geophysical logging information
   - completion data
   - aquifer testing information
   - equipment cleaning information
   - well screen information
   - casing information
   - annular seal information
   - material storage/packing information
   - use of lubricants/additives
   - straightness testing
   - well protection
   - other pertinent information.

2. Use one (more if needed) As-Built Diagram (Figure 2) for each well. Update this form daily. Record the well number, geologist's name, and page number (if more than one form is used). Graphically illustrate and label the well completion details, location and type of samples collected, and pertinent geologic and hydrologic observations. Use an appropriate vertical scale (usually 20 feet per inch) and label the depth in feet.

9 0 1 1 7 7 4 0 4 7 8

WELL COMPLETION/INSPECTION REPORT

Specification No. 1 Rev. No. 1
Project 2
Location 3
Drilling Co. 4
Driller 5
Other (companies) 6
Geologist(s) 7

Well No. 8 Temp. Well No. 9
Coordinates 10
Casing Elev. 11 Ground Elev. 12

DRILLING METHOD

Rotary Air 13 Mud 13
Cable Tool D 14 H 14
Drilling Fluid 15
Other 16

GEOPHYSICAL LOGGING

Sondes	Interval	Date
17	18 - 18	19
	-	
	-	
	-	
	-	

COMPLETION DATA

Drilled Depth 20
Completed Depth 21
Date Started 22
Date Completed 23
Static Water Level/Date 24

AQUIFER TESTING

Type 25
Length of Test 26
Volume Pumped 27
Drawdown 28
Date of Test 29

INSPECTION RESULTS

CLEANING

Inspection Method 30
Acceptance Criteria 31

	Accept	Reject	Date
Drilling Tools/Rig	32	32	32
Temporary Materials			
Permanent Materials			

SCREEN

Type	Length	Slot Size
33	34	35

Depth(s) 36 -
-

Inspection Method 30
Acceptance Criteria 31
Accept 32 Reject 32 Date 32

CASING (permanent)

Type	Size	Placement
37	38	39 -
		-

Inspection Method 30
Acceptance Criteria 31
Accept 32 Reject 32 Date 32

MATERIAL STORAGE/PACKING

Inspection Method 30
Acceptance Criteria 31

	Accept	Reject	Date
Mtl. Handling/Storage	32	32	32
Material Packing			

LUBRICANTS/ADDITIVES

Inspection Method 30
Acceptance Criteria 31

	Identify	Accept	Reject	Date
Additives	40	32	32	32
Lubricants	41			

STRAIGHTNESS TEST

Inspection Method 30
Acceptance Criteria 31
Accept 32 Reject 32 Date 32

WELL PROTECTION

Inspection Method 30
Acceptance Criteria 31

	Accept	Reject	Date
Protective Posts	32	32	32
Locks			

ANNULAR SEAL

Inspection Method 30 Acceptance Criteria 31

Type	Interval	Volume	Accept	Reject	Date
42	43 -	44	32	32	32
	-				
	-				
	-				
	-				

OTHER (initial if performed)

45 Well Abandonment
45 Well Development
45 Downhole TV Inspection
45 Complete As-Built Diagram, Driller's/Geologist's Logs

For all blanks mark N/A if not applicable.

FIGURE 1. Well Completion/Inspection Report

Battelle
Pacific Northwest Laboratories

AS-BUILT DIAGRAM

Well Number _____ Geologist _____ Page ____ of ____

Reviewed by _____ Date _____

Construction Data		Depth in Feet	Geologic/Hydrologic Data		
Description	Diagram		Sample	Diagram Litho.	Lithologic Description

A-1800-185 (3/87)

FIGURE 2. As-Built Diagram

9 0 1 1 7 7 4 0 4 8 0

DRILL LOG	By	Rig	Well Number	Computer Number	Project or Work Order No.
	Date		Depth To		Subcontract No.

Total Casing	Depth	Drill Method	Wet/Dry Sample	LITHOLOGIC DESCRIPTION % Each Grain Size, Color, Roundness, Caliche, Etc.	Time	Drilling Comments

REMARKS:

D - Drive Barrel H - Hard Tool L - Large M - Medium S - Small VC - Very Coarse C - Coarse F - Fine VF - Very Fine Standing Water

FIGURE 3. Drill Log

3. Use at least one Drill Log (Figure 3) for each well and for each day. Record the following information on the top of each form:

   - geologist's name
   - date
   - rig type and identification and driller's name
   - well number and location
   - starting depth
   - ending depth
   - computer number
   - project number
   - subcontract number.

   Use the remainder of the Drill Log for recording sample descriptions and/or well construction information, as detailed in the following sections. Sign and date each Drill Log at the end of each day.

4.2.2 Sample Collection

Position Responsible: WELL-SITE GEOLOGIST

The least destructive drilling method (drive-barrel) available to the well driller should be used for advancing the borehole and for recovery of borehole cuttings. Recovery of cuttings for sampling purposes should be performed at least every 5 feet of borehole depth and at significant changes in lithology (as determined by the well-site geologist). Cuttings from each sampled interval should be collected individually in clean 5-gallon buckets or other suitable containers.

The Well-Site Geologist performs the following:

1. Observe the recovery of cuttings from each sample interval and note on a Drill Log (Figure 3) any specific conditions that may affect the representativeness of the cuttings.

2. If the moisture content of the cuttings is thought to be representative (as determined by the well-site geologist), immediately collect a moisture sample. Collect the sample using a moisture tin; seal it with white tape; record the well number, depth, and date on the tape with indelible ink; and initial the tape. Wrap each sample in at least one plastic bag and seal the bag with tape.

3. Collect two pint-jar samples from the bucket, ensuring that the jar samples are representative of the cuttings. Affix a label to each sample jar. Record the well number, depth, date, and drill method on the label and on the jar lid with indelible ink. Initial the label. Note the number and type of samples collected on the Drill Log, following the sample description.

4. Use the remainder of the cuttings in the bucket for describing the lithology.

5. Preserve and transport the samples using ASTM D 4220 as a guide.

6. Temporarily store the samples in a suitable location (in truck, under work table, etc.) that protects them from temperature extremes and/or from damage or loss. Moisture samples should be kept cool until the analysis is confirmed.

7. Permanently store the samples in the Hanford Geotechnical Sample Library in the 2101-M Building of the 200-East Area.

4.2.3 Sample Description

Position Responsible: WELL-SITE GEOLOGIST

1. Examine and record on the Drill Log a physical description of the cuttings from the sampled interval. This description should be as detailed as time permits and should include the following information:

   - estimated textural classification (based on Folk's classification scheme)
   - estimated particle-size distribution (maximum, and range of gravel and sand-size fractions) and sorting
   - type of sedimentary structure(s) present
   - gross mineralogy
   - roundness and shape
   - color
   - odor
   - HCl reaction
   - consistency and/or cementation
   - changes from previously sampled interval
   - other findings.

   These descriptions should be made using Last and Liikala (1987) and/or ASTM D 2488 as a guide.

4.2.4 Well Construction Documentation

Position Responsible: WELL-SITE GEOLOGIST

Record the following well construction data under the lithologic description column on the Drill Log form, unless stated otherwise:

1. Well Status - record (under "Drilling Comments" on the Drill Log) depth-to-water (D/W) and depth-to-bottom (D/B) at the start of each shift. Note the times these measurements were taken in the time column. Measure to the nearest half foot in feet below land surface.

2. Well Construction Activities - give a description of all construction activities including drill rig decontamination, installation of casing (type, size, depth, and lengths--keep running totals in the Total Casing column), time, drill method, the type of tool lubricants used, drill depths, drill rates, down time, amounts of drilling supply water used, initial depth-to-water, and geophysical logging activities.

3. Well Completion Activities - record the completion depth, perforations (type, depth, and schedule), screen (type, length, slot size, and depth), packer (type, size, and depth), sand or gravel pack (type, interval, and volume), and annular seal (type, interval, and volume). Keep track of the D/B in the annulus versus the D/B of the temporary casing shoe and volumes of construction materials used per interval. Use mud balance for checking grout or slurry. Once a specific Well Completion/Inspection Record item has been finished (i.e., screen set, sand pack placed, or seal placed), record under "Drilling Comments" the lower and upper interval depths and the total amount and type of material used.

4. Well Development and Hydrologic Testing Activities - record pertinent information (i.e., method, duration, discharge rate, drawdown, total volumes extracted, and water quality) during both well development and hydrologic testing activities.

4.2.5 Technical Review

Position Responsible: SENIOR TECHNICAL REVIEWER

1. Following completion of the well the Well-Site Geologist forwards the

   - Drill Logs
   - As-Built Diagram
   - Well Completion/Inspection Report

   to the Senior Technical Reviewer for review.

9011174048 4

2. The Senior Technical Reviewer indicates concurrence by signing and dating the documents.

4.2.6 Data Management

Position Responsible: PROJECT MANAGER

1. After completion of the project, the Project Manager sends the original

   - Drill Logs
   - As-Built Diagram
   - Well Completion/Inspection Report

   for each well to the geologic and geophysical records manager at Pacific Northwest Laboratory's (PNL's) Geosciences Department.

2. The Project Manager also sends copies of each completed form to the PNL Records Retention Center.

5.0 REFERENCES

- ASTM. 1986. "Standard Practice for Description and Identification of Soil (Visual-Manual Procedure)." In Annual Book of ASTM Standards, Volume 04.08. ASTM D 2488-84, American Society for Testing and Materials, Philadelphia, Pennsylvania.

- ASTM. 1986. "Standard Practices for Preserving and Transporting Soil Samples." In Annual Book of ASTM Standards, Volume 04.08. ASTM D 4220-83, American Society for Testing and Materials, Philadelphia, Pennsylvania.

- Last, G. V., and T. L. Liikala. 1987. A Field Guide for Well Site Geologists: Cable Tool Drilling. PNL-6392, Pacific Northwest Laboratory, Richland, Washington.

ATTACHMENT 1

INSTRUCTIONS FOR COMPLETING WELL COMPLETION/INSPECTION REPORT

1. Enter the well specification number and revision number of the well specification.

2. Enter the project title (e.g., XYZ Crib Ground-Water Monitoring Project).

3. Enter the location of the well being drilled (e.g., XYZ Crib, 200W).

4. Enter the name of the drilling company.

5. Enter the driller's name (e.g., Fred Smith).

6. If another driller or company is used for any part of the construction (e.g., pouring concrete grout) indicate the company name here.

7. Enter the name(s) of all geologists working on the well.

8. Enter the permanent well number.

9. Enter the temporary well number if one was assigned.

10. Once surveyed enter the coordinates of the well.

11. Enter the well casing elevation.

12. Enter the ground elevation.

13. If rotary drilling method is used check the appropriate method, air or mud. If the rotary method is not used enter N/A.

14. If cable tool drilling is utilized indicate if a drive barrel, D, or hard tool, H, is used and over what interval.

15. Indicate any drilling fluid used and its source.

16. If another drilling method is used enter a description of it here.

17. If geophysical logging is performed enter the sondes.

18. Enter the interval logged for each sonde.

19. Enter the date each log is performed.

20. Enter the total drilled depth.

21. Enter the well completion depth.

22. Enter the date drilling is begun.

23. Enter the date the well is completed.

24. Enter the static water level and the date the measurement is made.

25. If aquifer testing is performed on the well indicate the type (e.g., modified step-drawdown). If aquifer testing isn't performed enter N/A.

26. Enter the length of the aquifer test in hours and minutes.

27. Enter the volume pumped during the aquifer test in gallons.

28. Indicate the drawdown observed during the aquifer test.

29. Enter the date of aquifer testing.

30. Enter the method used to verify that the indicated item meets the well specification requirement. Typical examples of inspection methods are indicated below:

    - "visual" for cleaning, well protection, material storage/packing, and lubricants/additives

    - "verify using steel tape" for screen, casing, and annual seal placement.

31. Enter the acceptance criteria used to accept an item as meeting the referenced specification. May be by simply referencing a specific requirement from the specification (e.g., spec. D3221, rev. 1, section 3.2.1). Other examples for specifying acceptance criteria are indicated below:

    - "no obvious visual contamination" for cleaning

    - "10-foot section of 7-inch casing passes freely to bottom of well" for straightness test.

32. Based on whether the item(s) meet the acceptance criteria in 30, initial either the "accept" or "reject" space and enter the date accepted or rejected. If an item is found to be in noncompliance with the well specification a Nonconformance Report (NCR) must be initiated in accordance with Quality Assurance procedures. The NCR number should be referenced on the Well Completion/Inspection Report form.

9011774048 7

33. Enter the identification of the screen (e.g., 4", Type 304L SS). Space is provided for identifying telescoping screen if used.

34. Enter the length of the screen in feet and inches.

35. Enter the screen slot size (e.g., 20).

36. Enter the depth range (interval) at which the screen is placed from the ground surface (e.g., 320′ 2.1" to 305′ 2.1").

37. Enter the permanent casing type(s) (e.g., 6", Schedule 40, ASTM Spec A312, Type 304 SS). Historical information on the temporary casing, if needed, can be found by examining the As-Built Diagram.

38. Enter the size (length) of each section of the permanent casing in feet and inches (e.g., 20′ 6").

39. Enter the placement (interval) at which the permanent casing is placed in feet and inches from the ground surface.

40. Identify any additives used during drilling including water.

41. Identify any lubricants used during drilling.

42. Enter the annular seal type used (e.g., bentonite pellets, cement grout).

43. Enter the interval of placement for each type of annular seal used in feet and inches from the ground surface (e.g., 188′ 6.2" to 168′ 1.5").

44. Enter the approximate volume of each annular seal material type added to the well. May be in cubic feet, buckets, sacks, etc.

45. Initial the appropriate Other activities if performed. Mark N/A if not applicable.

DO-2 SPLIT-BARREL AUGER SEDIMENT SAMPLING

1.0 APPLICABILITY

Sediment samples are collected for geologic description, determination of physical and hydraulic properties, and/or chemical analyses. This procedure applies to the work performed by well-site geologists during the collection and documentation of sediment samples recovered using split-barrel samplers. This procedure covers both periodic and continuous sampling methods. It should be used in conjunction with Procedure DO-1.

This procedure does not cover special requirements for handling potentially contaminated borehole samples.

2.0 DEFINITIONS

N/A

3.0 RESPONSIBLE STAFF

- Well-Site Geologist(s).

4.0 PROCEDURE

4.1 Prerequisites

4.1.1 Equipment

The following equipment will be needed to perform this procedure:

- Drill Log Forms
- pencils and/or black pens
- sample containers (jars, moisture tins, sleeves, and end caps)
- sealing tape (white)
- sample labels
- permanent marker (Sharpies)
- plastic bags (for moisture samples)
- scraper (stainless-steel knife)
- disposable sampling tools (plastic spoons, stainless-steel scoops)
- geologist's kit
- measuring stick or tape.

The following equipment is optional:

- scale (for photography)
- sign board (for photography)
- camera and film.

9 0 1 1 7 7 4 0 4 8 9

4.1.2 Safety Precautions

The following safety equipment is recommended as a minimum. Additional safety equipment may also be required as specified by the project manager:

- .leather gloves
- steel-toed boots
- hard hat
- safety glasses.

4.2 Step-by-Step Instructions

Position Responsible: WELL-SITE GEOLOGIST

1. Instruct the driller to advance the boring to just above the desired sample interval (usually every 5 feet and/or at lithologic changes). If the continuous core sampling method is being used, skip to step 7 of this subsection.

2. If a pilot bit is not being used while advancing the auger flights, instruct the driller to remove any soil or residue that entered the hollow stem of the auger flights during their advancement. Instruct the driller to then lower a clean split-barrel sampler to the bottom of the clean borehole using solid sampling rods. If an intact core sample is desired, an internal liner should be used in the sampler. Care should be taken not to drop the sampler down the borehole and onto the soil to be sampled.

3. Instruct the driller to lower the dead weight of the sampler, sampling rods, and a 140-pound hammer onto the bottom of the boring and to apply a seating blow. Make sure the bottom of the boring is at the desired depth by measuring the length of the sampler and sampling rods as they are lowered into the boring. If excessive cuttings are encountered, remove the sampler and cuttings, and repeat this step.

4. Mark the sampling rods in three successive 6-inch (0.15-meter) increments directly above the top of the auger flights or temporary casing.

5. Instruct the driller to drive the sampler with blows from the 140-pound (63.5-kilogram) hammer in accordance with ASTM D 1586-84 and count the number of blows applied in each 6-inch (0.15-meter) increment until either: 1) a total of 50 blows has been applied to any one 6-inch increment, 2) a total of 100 blows has been applied, 3) there is no observed advance of the sampler during 10 successive blows, or 4) the sampler is advanced its complete length (18-inch).

9 0 1 1 7 7 4 0 4 9 0

6. Record the hammer weight and the number of blows required for each 6-inch increment or fraction of increment to the nearest 1-inch. The sum of the number of blows required for the second and third 6-inch increments of penetration is the "N-value" ("standard penetration resistance"). If the sampler advances below the bottom of the boring under static weight of the drill rods and hammer, this should be noted on the drill log.

7. Instruct the driller to remove the sampler from the borehole, being careful not to knock the sample out of the sampler. Instruct the driller to carefully remove the sampler from the drill rod.

8. Lay the sampler flat and carefully remove the drive shoe and end cap. Remove one side of the split-barrel sampler. Record the percent recovery or length of sample recovered versus the length driven.

9. With a clean knife or other suitable object, carefully scrape any smeared material (top 1/8 - 3/8 inch) off the top half of the sample. If this cannot be done without disturbing the sample or the sample can easily be described without exposing a fresher surface, or a liner is used, disregard this step.

10. Examine, physically describe, and photograph (optional) the sample. Record the physical description on a Drill Log (Figure 1) in accordance with DO-1. Include the borehole number, depth of the sampled interval, drill method, wet/dry sample, lithologic description, date and time the sample was collected, and any suitable comment regarding the representativeness of the sample. Make these descriptions thorough, and record all entries chronologically. Sign and date the Drill Log at the end of each day.

11. Carefully remove one or more representative portions of the sample and place them in suitable containers (moisture tin, canning jars, etc.). If more than one layer of material is present, collect the subsamples by partitioning the sample into lithologically similar subsamples. Take care to exclude any slough in the upper end of the sampler. Avoid ramming or distorting any apparent stratification. Take chemical subsamples from near the axis of the split-spoon sample, taking care to avoid cross contamination that may have smeared along the perimeter of the sample. If the sample is to remain intact and/or a liner is used, disregard this step.

12. Label the sample containers with the borehole identification number, the depth interval of the sample or subsample, the date, and the geologist's initials. Protect the samples from extreme temperatures. Preserve and transport the samples using ASTM D 4220 as a guide.

9 0 1 1 7 7 4 0 4 9 1

9 0 1 1 7 7 4 0 4 9 2

DRILL LOG	By	Rig	Well Number	Computer Number	Project or Work Order No.
	Date		Depth To		Subcontract No.

Total Casing	Depth	Drill Method	Wet/Dry Sample	LITHOLOGIC DESCRIPTION % Each Grain Size, Color, Roundness, Caliche, Etc.	Time	Drilling Comments

REMARKS:

D - Drive Barrel H - Hard Tool L - Large M - Medium S - Small VC-- Very Coarse C - Coarse F - Fine VF - Very Fine ____Standing Water A-6000-021 (5-85)

FIGURE 1. Drill Log

13. Scrape the sampler clean of all foreign matter and wash with water or a pre-approved detergent solution. Rinse the sampler clean and reassemble.

14. Label samples "Suspect" and/or discard if the location and depth of the sample is lost or unknown, or if the representativeness of the sample is in question.

15. If physical analyses are to be performed by PNL's Soils Laboratory in the Sigma V Building, hand deliver the samples to the Soils Laboratory Coordinator or his representative (after obtaining a radiation release, where necessary). When the samples are received, the Soils Laboratory Coordinator or his representative will log the samples into a controlled notebook, along with the date and time they were received. The samples will be logged in and always identified by the borehole number and depth as clearly labeled on the sample container.

5.0 REFERENCES

- ASTM. 1986. "Practices for Preserving and Transporting Soil Samples." In Annual Book of ASTM Standards, Volume 04.08, ASTM D 4220. American Society for Testing and Materials, Philadelphia, Pennsylvania.

- ASTM. 1986. "Standard Method for Penetration Test and Split-Barrel Sampling of Soils." In Annual Book of ASTM Standards, Volume 04.08, ASTM D 1586-84. American Society for Testing and Materials, Philadelphia, Pennsylvania.

THIS PAGE INTENTIONALLY
LEFT BLANK

9 0 1 1 7 7 4 0 4 9 4

DO-3 DOCUMENTATION OF SAMPLING PUMP INSTALLATION

1.0 APPLICABILITY

This procedure applies to the documentation of sampling pump installation in ground-water monitoring wells. It may be applied independently of the sample pump type, but has been written focusing on HydroStar® sampling pumps.

2.0 DEFINITIONS

- Pump - mechanism used to lift water from the well
- Pump intake - location on the pump that water enters
- Pump piston - cylinder that displaces water in a positive displacement pump
- Riser pipe - pipe connected to pump that conducts water to the top of the well
- Riser pipe coupling - device that connects the lengths of riser pipe
- Operating rod - connecting rod that actuates the pump piston in a positive displacement pump
- Pump landing plate - metal plate located on top of permanent casing on which the riser pipe is secured
- Pump head - assembly located above the pump landing plate
- Screened interval - interval of the monitoring well that contains the screen
- Saturated screened interval - portion of the screened interval that is in contact with the aquifer

3.0 RESPONSIBLE STAFF

- Project Manager
- Well-Site Geologist

4.0 PROCEDURE

4.1 Prerequisites

4.1.1 Equipment

- steel tape
- carpenter's chalk
- electrical water-level indicator (E-tape)

- engineer's measuring tape graduated in tenths of a foot
- Drill Log Forms
- Sampling Pump Installation Forms
- Well Completion/Inspection Report.

4.1.2 Safety Precautions

The following safety equipment is recommended as a minimum. Additional safety equipment may be required in the project's Site Safety Plan and/or by the Project Manager:

- leather gloves
- steel-toed boots
- hard hat
- safety glasses.

The majority of physical hazards associated with sampling pump installation involve the operation of the pump setting rig, including rotating machinery, pinch points, heavy tools, and noise levels. Other physical hazards to be aware of are cold and heat stress. Refer to the Site Safety Plan for other site-specific physical hazards and chemical hazards.

9 6 4 0 4 7 7 1 1 0 9

4.2 Step-by-Step Instructions

4.2.1 General

Position Responsible: AUTHORIZED TECHNICAL STAFF

1. Obtain the applicable forms (Figures 1 and 2) and fill in the preliminary information [i.e., location, well number, pump type and model, company, and person(s) installing the pump]. Use the Drill Log Forms for all notes and measurements; use the Pump Installation Form to summarize activities documented on the Drill Log Forms.

2. Measure the depth-to-water (D/W) and the depth-to-bottom (D/B) for the well (see Procedure WL-1). Each measurement should be to the nearest one hundredth of a foot (0.01 ft) and verified by a second measurement that is within two hundredths of a foot (0.02 ft). Measurements should be from the top of the casing or top of the landing plate on the north side; record all measurements and the identification number(s) of the tape(s) that were used to obtain measurements on the Drill Log Form.

3. Inspect and document that the sampling pump, riser pipes, operating rods (if applicable), and couplings are in protective wrappers supplied by the manufacturer or have been adequately wrapped and protected when not in use. All sampling pump materials shall be kept off the ground and on clean plastic sheeting during pump installation; clean cotton gloves shall be worn by the person(s) installing the sampling pump. If steam

SAMPLING PUMP INSTALLATION FORM

Project: 1 Well Number: 2

Pump Type: 3 Pump Model: 4

Date Installed: 5 Installed by: 6

Depth-to-Water: 7 Depth-to-Bottom: 8

Reported Depth-to-Bottom: 9 Date: 10

Screened Interval: 11 Saturated Screened Interval: 12

Pump Riser Pipe Description: 13

Additional Comments: 14

Sketch of Pump Installation: 15

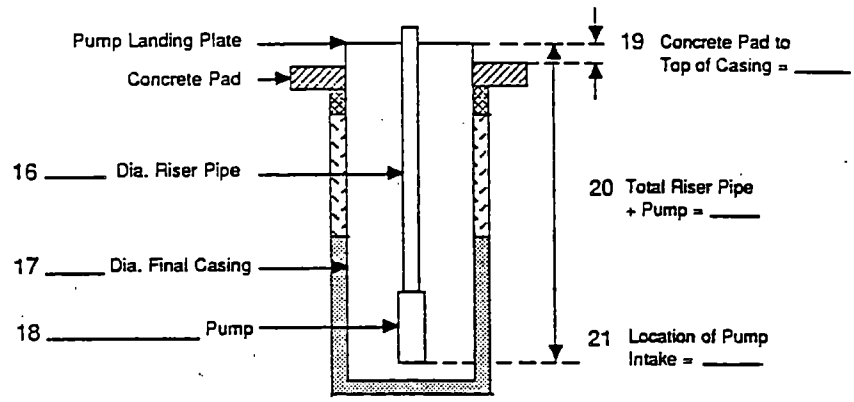

Completed By: 22 Date: 23

FIGURE 1. Sampling Pump Installation Form

This form is the preferred method for documenting information. However, alternate methods may be used provided that the content and method of processing is consistent with Procedure DO-3.

DRILL LOG	By	Rig	Well Number	Computer Number	Project or Work Order No.
	Date		Depth To		Subcontract No.

Total Casing	Depth	Drill Method	Wet/Dry Sample	LITHOLOGIC DESCRIPTION % Each Grain Size, Color, Roundness, Caliche, Etc.	Time	Drilling Comments

REMARKS:

D - Drive Barrel H - Hard Tool L - Large M - Medium S - Small VC - Very Coarse C - Coarse F - Fine VF - Very Fine ____ Standing Water

A-6000-021 (5-85)

FIGURE 2. Drill Log Form

cleaning is necessary because of inadequate storage, packaging, or handling of the materials, record this on the Drill Log Form, and inform the person(s) installing the pump of the situation.

4. Document that the sampling pump was inspected by the person(s) installing the pump. On HydroStar pumps, document that the person(s) installing the pump disassembled the end section and removed the internal pump mechanism. Teflon® cups shall be inspected for abrasion and all nuts must be tight. Record that the person(s) installing the pump actuated the piston to ensure that it moved freely before installation in the monitoring well.

5. Record the length of each riser pipe and coupling before installation in the monitoring well. Document whether each joint was wrapped with Teflon tape to prevent unnecessary leakage. Keep a running total of each measurement and the order in which each pipe and coupling were placed in the well on the Drill Log Forms.

6. Calculate and document the location of the sampling pump intake. This location will be calculated by the Authorized Technical Staff member documenting pump installation from measurements obtained in Step 2 and existing well completion information. The sampling pump shall be placed so the pump intake is centered within the saturated screened interval or as designated by the Project Manager.

7. Ensure and document proper landing plate and pump head installation. Record pertinent observations on the Drill Log Form.

8. Check the Drill Log and Pump Installation Forms to ensure the collection and documentation of all necessary information.

9. Document that the well was locked when you departed; if this is not possible, inform the Project Manager in writing.

9011774049 6

ATTACHMENT 1

INSTRUCTIONS FOR COMPLETING SAMPLING PUMP INSTALLATION FORM

1. Enter the project title.

2. Enter the permanent monitoring well number; if one is not available, enter the assigned temporary number.

3. Record the pump type (e.g., positive displacement piston).

4. Record the pump model and serial model (e.g., HydroStar HS-8001)

5. Record the date(s) of pump installation.

6. Record the company and name(s) of person(s) installing the pump.

7. Enter the D/W and the identification number of the tape that was used. Measurements should be from the top of the casing on the north side and should be repeated until two D/W measurements agree within two hundredths of a foot (0.02 ft).

8. Enter the D/B of the well and the identification number of the tape that was used. Measurements should be from the top of the casing on the north side.

9. Record the previously reported D/B; this can be obtained from the Drill Log Form that documented well development or well completion. If the difference between the previously reported D/B and the current D/B is greater than two tenths of a foot (0.2 ft), notify the Project Manager.

10. Record the date of the previously reported D/B.

11. Record the depth of the screened well interval; this may be obtained from the Drill Log Forms or Well Completion/Inspection Report.

12. Calculate and record the saturated screened interval using the D/W obtained in Step 2 of the Step-by-Step Instructions.

13. Record the length and outside diameter (o.d.) of each pipe and coupling in the order which they were placed in the well. Note whether the joints were taped with Teflon tape. This may be a summary of a more detailed description included on the Drill Log Form.

14. Enter a brief description of work conditions during pump installation (i.e., if the sampling pump and pipe were properly protected during installation). This may be a summary of a more detailed description included on the Drill Log Form.

15. Sketch pump installation; include the following items:

    - outer diameter (o.d.) of riser pipe
    - outer diameter (o.d.) of final casing
    - model of pump
    - measured distance from top of concrete pad to top of casing
    - total measured length of riser pipe, couplings, and pump
    - location of pump intake.

16. Have the person observing the pump installation indicate that the information recorded is complete and accurate by signing the Pump Installation Form.

17. Have the person observing the pump installation enter the date the Pump Installation Form was completed.

9 0 1 1 7 7 4 0 5 0 1

THIS PAGE INTENTIONALLY
LEFT BLANK

9 0 1 1 7 7 4 0 5 0 2

DO-4 CONTAMINATED SEDIMENT SAMPLING

1.0 APPLICABILITY

This procedure details the methods for sampling contaminated sediment for radiological and geochemical analysis. The applicability of this procedure shall be identified in the appropriate Sediment Sampling and Analysis Plan and/or the appropriate Health and Safety Plan. This procedure shall be used in conjunction with procedures 1) DO-1, Collection and Documentation of Borehole Samples and Well Construction Data; 2) DO-2, Split-Barrel Auger Sediment Sampling; and 3) AD-4 Sediment Sample Chain-of-Custody.

2.0 DEFINITIONS

- Exclusion Zone - Designated area surrounding the drilling operations in which only authorized, trained, and properly attired persons who are working are allowed. Zone shall be designated by ribbon, stakes, or other markers.

3.0 RESPONSIBLE STAFF

- Field Geologist(s).

4.0 PROCEDURE

4.1 Prerequisites

4.1.1 Equipment

- permanent markers
- ice chest with ice (if applicable to sample preservation)
- sampling tools (stainless steel spatulas, scoops)
- designated sample containers
- sample labels
- sample seals
- Chain-of-Custody Forms
- Drill Logs
- designated personal protective equipment
- designated contaminant detection equipment
- designated decontamination equipment
- applicable Sediment Sampling and Analysis Plan
- applicable Health and Safety Plan.

Items listed as designated and applicable are site specific and will be identified in the project's Sediment Sampling and Analysis Plan and/or Health and Safety Plan or by the Project Manager.

4.1.2 Safety Precautions

Sediment samples may pose a hazard to the responsible staff; therefore, the staff shall adhere to the applicable safety precautions outlined in the

9 0 1 1 7 7 4 0 5 0 3

Health and Safety Plan. The nature of the hazards are physical, chemical, and radiological. A discussion of each of these hazards is covered in the Health and Safety Plan. This plan outlines the action levels and personal protection equipment required to complete the sampling.

4.1.3 Detection Equipment

Detection equipment (e.g., photoionizer, detection tubes, etc.) identified in the Health and Safety Plan will be used to determine type and if possible, concentration of sediment contamination. The detection equipment will be calibrated a minimum of once a day or according to the manufacturer's instructions. At each sampling interval, readings with the detection equipment will be taken and recorded on the Drill Logs. In areas where a Radiation Protection Technologist (RPT) is required to be present, the RPT will be responsible for radiological equipment calibration and radiological monitoring. Representative readings made by the RPT will be recorded in the Drill Logs.

4.1.4 Decontamination

Decontamination of the personnel will be carried out according to the Health and Safety Plan. Decontamination of the sampling equipment and the detection equipment will be carried out according to the requirements in the Sediment Sampling and Analysis Plan and/or the drilling specifications. In the event of contradictions, the Sediment Sampling and Analysis Plan takes precedence. An exclusion zone will be set up around the sampling area with a decontamination area at the access point of the exclusion zone. Decontamination activities will be restricted to this area unless an onsite location away from the exclusion zone (i.e., decontamination pad or lab) has been established as the decontamination area. In the case of a decontamination area away from the exclusion zone, the equipment to be decontaminated will be prepared for transport in a manner that eliminates the spread of contamination during transport. Waste products from the decontamination process will be contained and disposed of properly. The type of decontamination process and the verification of waste containment will be recorded on the Drill Logs by the Field Geologist.

4.1.5 Sample Preservation

In accordance with the Sediment Sampling and Analysis Plan, the designated sample bottles, preservation measures, and holding times of samples will be determined before initiating sampling (EPA 1986).

4.2 Step-by-Step Instructions

4.2.1 Sample Collection Technique

Position Responsible: FIELD GEOLOGIST

The sample collection technique will be determined by the sampling method (drive barrel, split spoon sampler, hard tool). See Attachments 1, 2, and 3.

9011740504

4.2.2 Sample Identification and Transport

Position Responsible: FIELD GEOLOGIST

Sample identification will be recorded on each sample container and on the Drill Logs. Chain-of-Custody Forms will be initiated by the geologist with the appropriate information (see Procedure AD-4, Sediment Sample Chain-of-Custody Procedure).

5.0 REFERENCES

- EPA. 1986. Test Methods for Evaluating Solid Waste. SW-846, Third Edition, U.S. Environmental Protection Agency, Washington, D.C.
- Procedure AD-4, "Sediment Sample Chain of Custody."
- Procedure DO-1, "Collection and Documentation of Borehole Samples and Well Construction Data."
- Procedure DO-2, "Split-Barrel Auger Sediment Sampling."

9011774050

ATTACHMENT 1

INSTRUCTIONS FOR SAMPLING CONTAMINATED SEDIMENTS USING A DRIVE BARREL

Position Responsible: FIELD GEOLOGIST

Note: Additional instructions to be used in conjunction with these procedural instructions may be included in the Sediment Sampling and Analysis plan.

1. Ensure sample collection equipment has been decontaminated.

2. Instruct the driller to advance the boring to the desired sample interval (usually every 5 feet and/or at lithologic changes).

3. Instruct the driller to remove the sediment-filled drive barrel from the borehole and secure the drive barrel in order to easily remove the sediment for samples. Do not suspend the drive barrel directly over the borehole.

4. If another organization has not been delegated the responsibility for overseeing and monitoring site safety check the sediment in the drive barrel with the designated detection equipment (e.g., photoionizer, Geiger Meters, Portable Alpha Meters, etc.) to determine type and level of contamination.

5. Note any discoloration, moisture, odor, or unnatural appearances of the sediment and record on the Drill Log.

6. Remove the sediment from the drive barrel using a stainless steel spatula or stainless steel spoon. Remove the sediment from the middle of the drive barrel being careful not to remove sediment that has come in contact with the walls or top of the drive barrel. This will prevent possible cross contamination. Collect the sediment in the sample containers or into a decontaminated stainless steel bucket to fill sample containers away from the drill rig.

7. Handling of the sediment shall be limited to a designated area within the exclusion zone.

8. Clearly mark on the sample containers the date, time, depth, and well number, and initial the label. The sediment analysis and preservative, if any, should be previously labeled. Seal the container with a tamper-proof seal. Initiate the Chain-of-Custody Form.

9. Retain a portion of the sediment for geologic description in accordance with Procedure DO-1.

9011774050 6

ATTACHMENT 1 (contd)

10. Record pertinent information on the Drill Log including depth, date, and time samples were collected; name of sampler; contamination detection; drilling information; and any unusual circumstances or observations. [Reference the procedure(s) used for sample collection.]

9011774050 7

ATTACHMENT 2

INSTRUCTIONS FOR SAMPLING CONTAMINATED SEDIMENTS
USING A SPLIT BARREL SAMPLER

Position Responsible: FIELD GEOLOGIST

Note: Additional instructions to be used in conjunction with these procedural instructions may be included in the Sediment Sampling and Analysis plan.

1. Ensure sample collection equipment has been decontaminated.

2. Instruct the driller to advance the boring to the desired sample interval (usually every 5 feet and/or at lithologic changes).

3. Instruct the driller to remove the sediment-filled split barrel sampler from the borehole, to remove the split barrel sampler from the drill rod, and to lay the split barrel sampler on a clean plastic sheet or table.

4. Instruct the driller to remove the drive shoe and end cap and carefully open the split barrel. Record run length, recovered length, and the percentage of sample recovered on the Drill Log.

5. If another organization has not been delegated the responsibility for overseeing and monitoring site safety check the sample with the designated detection equipment (photoionizer, Geiger Meters, Portable Alpha Meters, etc.) to determine level of contamination.

6. Note any discoloration, odor, or unnatural appearances of the sediment and record on the Drill Log.

7. Carefully scrape any smeared material (top 1/8-3/8 inch) off the top half of the sample. If this cannot be done without disturbing the sample or a liner is used, disregard this step. Remove the sediment samples from the split barrel sampler with a stainless steel spatula or stainless steel spoon. Remove the sediment from the middle of the split barrel, being careful not to remove sediment that has come in contact with the walls of the split barrel. This will prevent possible cross contamination. Collect the sediment in the appropriate sample containers.

8. Handling of the sediment shall be limited to a designated area within the exclusion zone. Contain and dispose of all sediment spoils properly as designated in the Sediment Sampling and Analysis Plan.

9 0 1 1 7 7 4 0 5 0 8

ATTACHMENT 2 (contd)

9. Clearly mark on the sample containers the date, time, depth, and well number, and initial the label. The sediment analysis and preservative, if any, should be previously labeled. Seal the container with a tamper-proof seal. Initiate the Chain-of-Custody Form in accordance with procedure AD-4.

10. Retain a portion of the sediment for geologic description in accordance with Procedure DO-1.

11. Record pertinent information on the Drill Log including depth, date, and time samples were collected; name of sampler; contamination detection; drilling information; and any unusual circumstances or observations. Record the procedure(s) used for sample collection including date or revision number.

9011774050 9

ATTACHMENT 3

INSTRUCTIONS FOR SAMPLING CONTAMINATED SEDIMENTS
USING HARD TOOL AND BAILER SAMPLER

Position Responsible: FIELD GEOLOGIST

Note: Additional instructions to be used in conjunction with these procedural instructions may be included in the Sediment Sampling and Analysis plan.

1. Ensure sample collection equipment has been decontaminated.

2. Instruct the driller to advance the boring to the desired sample interval (usually every 5 ft and/or at lithologic changes).

3. Instruct the driller to remove the cuttings from the borehole using a bailer and to place them into a stainless steel bucket.

4. If another organization has not been delegated the responsibility for overseeing and monitoring site safety and if contamination is suspected, check the sample in the bucket with the designated detection equipment (e.g., photoionizer, Geiger Meters, Portable Alpha Meters, etc.) to determine the type and level of contamination.

5. Note any discoloration, odor, or unnatural appearances of the sediment and record on the Drill Log.

6. Remove the sediment from the stainless steel bucket with a stainless steel spatula or stainless steel spoon, and collect the sediment in the appropriate sample containers.

7. Handling of the sediment shall be limited to a designated area within the exclusion zone. Contain and dispose of all sediment spoils properly as designated in the Sediment Sampling and Analysis Plan.

8. Clearly mark on the sample containers the date, time, depth, and well number, and initial the label. The sediment analysis and preservative, if any, should be previously labeled. Seal the container with a tamper-proof seal. Place samples for chemical analysis on ice to be kept cold until delivered to the laboratory. Initiate the Chain-of-Custody Form in accordance with procedure AD-4.

9. Retain a portion of the sediment for geologic description in accordance with Procedure DO-1.

9011774051 0

ATTACHMENT 3 (contd)

10. Record pertinent information on the Drill Log including depth, date, and time that samples were collected; name of sampler; contamination detection; drilling information; Chain-of-Custody Form number; and any unusual circumstances or observations. Record the procedure(s) used for sample collection including date or revision number.

THIS PAGE INTENTIONALLY
LEFT BLANK

9 0 1 7 7 4 0 5 1 2

DA-1 SIMPLE DATA SUMMARIES

1.0 APPLICABILITY

Ground-water monitoring data collected for RCRA Interim Status Assessment projects will be routinely summarized for reporting to the sponsors and regulators, and nonroutinely analyzed for the assessment of the ground-water regime. This procedure describes the generation of the summaries that are routinely applied to these data. These summaries may also prove useful for other types of ground-water monitoring projects.

It is also anticipated that more sophisticated statistical techniques, such as time series analysis, factor analysis, regression analysis, geostatistics, and other techniques that are appropriate for analyzing the data will be used in the assessment of the ground-water system. However, these will not be applied on a routine basis and are not described in this procedure.

At this time, the routine procedures applied to the data produce summaries described in "Resource Conservation and Recovery Act (RCRA) Ground-Water Monitoring Technical Enforcement Guidance Document" (TEGD) (EPA 1986). These summaries list and summarize the data with simple descriptive statistics calculated using different combinations of the data. They also plot the data for visual review. The steps needed to accomplish this are outlined below in Section 4.0 for generating simple data summaries.

Other planned statistical procedures to be routinely applied are trend tests to identify statistically significant increases in contamination, quality control charts to look for off-normal levels of contamination or outliers, and hypothesis tests for statistical significance of possible contamination. Examples of these methods and others can be found in Ground-Water Monitoring Plans and Statistical Procedures to Detect Leaking at Hazardous Waste Facilities (PNL 1986). However, all of these procedures depend on having a certain amount of historical data. The procedures for applying these methods will be developed as the quantity of data allows and will be included in this procedure as they become available.

2.0 DEFINITIONS

- HGWDB - the Hanford Ground-Water Data Base
- RCRA - the Resource Conservation and Recovery Act
- RCRA Interim Status Ground-Water Assessment - those activities undertaken to satisfy the requirements established in 40 CFR 265.93(d)(3)

3.0 RESPONSIBLE STAFF

- Project Statistician

4.0 PROCEDURE

The TEGD (EPA 1986) describes certain simple summaries of the ground-water chemical constituent data that the regulators would like available to them when they are reviewing the status of any ground-water monitoring network. This section defines the procedures that are used to generate these suggested summaries.

4.1 Prerequisites

4.1.1 Ground-Water Chemical Constituent Data

The data used as input to the programs discussed in this procedure are maintained in PNL's Hanford Ground-Water Database (HGWDB). These data are entered into the data base using Procedure DM-1, "Data Handling and Verification."

4.1.2 Computer Hardware and System Supported Software

All of the programs discussed in this procedure are run on PNL's ZVAX, a VAX-11/780. The latest version of the operating system is VAX/VMS 4.7. System supported software packages used for this procedure are: VAX/DATATRIEVE, Version 4.1, used to extract data from the HGWDB and prepare a card image file for input to summarization programs; and Statistical Analysis System (SAS), Version 5.16, used to read in the data, organize it, summarize it, and generate tables and graphics.

4.1.3 Access to Programs

The programs and data files for each separate project covered by this procedure are maintained on individual project accounts on the ZVAX. The user of these programs must have permission from the Project Statistician to access the project account. Within each project account there is a file called NOTE.BOOK that contains the latest instructions for generating the tables and plots for that project.

4.2 Step-by-Step Instructions

Position Responsible: PROJECT STATISTICIAN

The following steps must be followed to generate the simple EPA summaries.

1. Log on to a personal account on the ZVAX and SET PROJECT to the appropriate project account. Review the NOTE.BOOK file in the project account to ensure that the most recent report generation instructions are being followed for that project. Each project will have the same basic programs except for header information, lists of well names, definition of site-specific constituents, and other possible minor differences.

2. Retrieve the necessary raw data from the HGWDB using the appropriate DATATRIEVE command files by entering "DTR @filename" at a VMS prompt or by submitting a batch job with a similar statement in it. For example, the following DATATRIEVE command files are used to retrieve raw data for the project overseeing the 183-H Solar Evaporation Basins:

   ANA183H.DTR for chemical constituent data (ANADAT relation)
   HYD183H.DTR for water level data (HYDDAT relation)
   TMP183H.DTR for temperature data (TMPDAT relation).

3. Read the retrieved raw data into SAS and give simple listings by using the appropriate SAS command files by entering "SAS filename" at a VMS prompt or by submitting a batch job with a similar statement in it. For example, the following SAS command files are used for the 183-H Solar Evaporation Basins project:

   ANA183H.SAS for the chemical constituent data
   HYD183H.SAS for the water level data
   TMP183H.SAS for the temperature data.

   A review of the output from the program for chemical constituent data is necessary. It contains information that may be needed for updating two programs referenced in the next step: LISTS.SAS and PERIODS.SAS.

4. Prepare chemical constituent data for input to EPA summary programs. The three following SAS command files are not run themselves but are read into other SAS command files referenced below. They contain defining information that is not included in the HGWDB but is used for organizing the data. HOBOKEN.SAS is in its final form, but LISTS.SAS will have to be updated whenever a constituent subset changes. PERIODS.SAS will have to be updated each sample period.

   HOBOKEN.SAS identifies data analyzed by UST/Hoboken.
   LISTS.SAS defines constituent subsets for the Standard List.
   PERIODS.SAS defines the sample periods by dates of sampling.

   Once LISTS.SAS and PERIODS.SAS have been appropriately updated, run the following program by entering "SAS ABOVEDL" at the VMS prompt or by submitting a batch job with a similar statement in it. This program separates the data into two SAS datasets for further processing. One, called BELOWDL, is the most basic summary of the data and is used as input to TABLE60.SAS in the next section. The other dataset is called ABOVEDL. It contains all the raw data for each constituent that had at least one value reported as being above the detection limit and is used as input to all the other simple summary programs.

   ABOVEDL.SAS separates ANA183H into BELOWDL and ABOVEDL.

5. The following programs actually produce the output that is reported to the sponsors and regulators. Each program is run by entering "SAS filename" at the VMS prompt or submitting a batch job with a similar statement in it.

TABLE60.SAS	- summary for all constituents (total, above detection limit)
TABLE61.SAS	- raw data listing per constituent greater than detection limit
TABLE62.SAS	- simple statistical summaries by constituent
TABLE63.SAS	- simple statistical summaries by constituent and well
TABLE64.SAS	- simple summaries by constituent, well, and sample date
TABLE65.SAS	- simple summary by ranking descriptive statistics
PLOT183H.SAS	- does time plots of constituents.

TABLE60.SAS is not mentioned in the TEGD, but has proven useful in data presentation because it identifies constituents that have not been detected and constituents that have exceeded Drinking Water Standards. TABLE61.SAS is a program for listing raw data, but in a more compact format than presented in the TEGD. TABLE62.SAS through TABLE65.SAS present the data as shown in Tables 6.2 through 6.5 of the TEGD.

5.0 REFERENCES

- PNL. 1986. Ground-Water Monitoring Plans and Statistical Procedures to Detect Leaking at Hazardous Waste Facilities. PNL-5754, Pacific Northwest Laboratory, Richland, Washington.

- EPA. 1986. Resource Conservation and Recovery Act (RCRA) Ground-Water Monitoring Technical Enforcement Guidance Document. OSWER 9950.1, U.S. Environmental Protection Agency, Washington, D.C.

GL-1 GEOPHYSICAL WELL LOGGING VAN OPERATING PROCEDURE

1.0 APPLICABILITY

This procedure describes the operation of the Geophysical Well Logging Van. Geophysical borehole logging consists of lowering probes and a television camera down boreholes and recording at the surface a continuous instrumental response to the subsurface material. In an attempt to standardize log responses, a log will be made from each probe every 3 months in reference well 399-5-2. If a probe malfunctions during logging, the probe will be run in the reference well after repair to assure proper response.

2.0 DEFINITIONS

N/A

3.0 RESPONSIBLE STAFF

- Authorized Technical Staff.

4.0 PROCEDURE

4.1 Prerequisites

4.1.1 Equipment

- logging cable and winch system
- electronic surface equipment that transmits and receives information from the probes
- AC power source
- sensing probes: temperature, three- and four-arm calipers, gamma ray, neutron-epithermal neutron (neutron), gamma-gamma (density), spontaneous-potential resistivity (SP&R), flowmeter, fluid resistivity, gradiometer (magnetic), fluid sampler, sonic bond, and TV camera
- chart recorder
- rig-up chains, cable, and sheaves
- radioactive sources
- tool box
- calibration equipment
- logbook

- hard hats
- leather gloves
- steel-toed shoes
- 2 ABC fire extinguishers.

4.1.2 Qualification for Authorization

Technical staff will be considered authorized to operate the geophysical well logging equipment in accordance with procedures GL-1 through GL-15 if:

(a) they have completed a documented Training Assignment requiring the technical staff to read the applicable procedures before going into the field

(b) they have completed a documented Training Assignment of on-the-job training in the use of the geophysical logging equipment under the supervision of an authorized technical staff member. The authorized technical staff member will decide when a staff member in training is qualified to operate the equipment, or

(c) the cognizant line manager waives the documented training requirements in (a) and (b) above and authorizes the technical staff based on previous experience. Such a waver must be documented by memo or similar means and state the basis for the waiver.

4.1.3 Safety

Operation of the geophysical logging van can be hazardous when work is connected with a drilling rig. Hard hat, gloves, and safety shoes must be worn when work is connected with drilling rigs.

Special care should be taken before connecting and disconnecting the probes from the cable head to make sure the electrical current has been shut off. Failure to follow this safeguard may result in electrical shock.

Two 10-pound ABC fire extinquishers must be carried in the logging van at all times.

Review Job Safety Analysis on Operation of the Downhole Television System, Operation of the Geophysical Logging System and Operation of Government Vehicles.

4.2 Step-by-Step Instructions

Position Responsible: AUTHORIZED TECHNICAL STAFF

NOTE: Sonic logs should always be run with centralized tools where hole size permits. This is to ensure a near-constant travel time through the borehole

and symmetrical response from all quadrants with no destructive interference of sound reaching the receiver because of unequal radial travel time paths between the tool and the borehole wall.

4.2.1 Setting Up the Equipment

1. In preparation for geophysical logging or television logging, park the logging van no closer than 60 feet from the well head. This will allow the cable to spool evenly on the drums.

2. Place a sheave over the center of the well casing.

3. Extend the cable with the attached camera or geophysical probe from the winch to the sheave at the well, such that the camera lens or probe sensing element is even with the well measuring point.

4. Set the mechanical registers on the cable drums and the electronic register on the TV monitor to zero.

4.2.2 Operating the Truck Hydraulic System

1. Start the truck engine to build up pressure in the air tank.

2. After air pressure has built to about 70 pounds, depress the truck clutch peddle and engage the power take off lever. Release the clutch and turn truck ignition off. Make sure the truck transmission is in neutral and the emergency brake is set.

3. Both cable drums run off of the same hydraulic pump. In order to switch from one to the other, valves mounted on the geophysical cable drum must be changed. To operate the TV cable drum, move both valves toward that drum. To operate the geophysical cable drum, move both valves toward that drum.

4. Check to be sure that the fuse switch on the operators panel is in the ON position. The switch must be in this position to allow power to go to the panel switches.

5. Start the truck engine from the operators panel and run at idle speed - 600 to 700 RPM. Observe the tachometer.

6. With the UP-DOWN hydraulic control lever in neutral, shift the transmission into the desired gear. Leave the transmission in neutral when operating the TV cable drum.

7. When lowering equipment into the hole, place the UP-DOWN hydraulic control lever in the DOWN position and adjust the speed with the adjustable flow regulator valve on the front of the operators panel and the truck throttle control.

8. Observe the tachometer and hydraulic pressure gauge on the operators panel. Do not exceed 3,000 RPM and 1,500 PSI when operating the geophysical drum and 1,000 RPM and 1,500 PSI when operating the TV cable drum.

9. During warm weather, open the door to the hydraulic fluid reservoir so air will circulate and cool the fluid.

4.2.3 Operating the AC Electrical System

1. Before starting the generator open the doors to the generator compartments and leave them open while the generator is in operation. Failure to do this may result in overheating and damage to the generator.

2. Before starting, check the oil.

3. Observe the control panel for the proper voltage and cycles output from the generator. Voltage should be 115V plus or minus 5V. Cycles should be 60Hz plus or minus 2Hz.

4. If one generator is overloaded, start the other generator and divide the load by switching on the control panel.

4.2.4 Calibrating the Probes

1. Calibrate all probes in accordance with instructions set forth in Procedures GL-2 through GL-15. Calibrate geophysical probes before and after the log is made. This double check of the calibration accounts for any drift or malfunction in the system. Note calibrations actions on the original geophysical logs. This notation shall comprise documentation of the calibration.

2. Before placing the probe in the well make sure it is clean. If not, wipe it down with a clean cloth to prevent cross contamination between wells.

3. Run a 30-foot repeat section of the log to check on a probe's repeatability. If logs have been run previously in a well, a 30-foot overlap will be run to check for repeatability.

4.2.5 Logging the Well

All geophysical logs, with the exception of temperature and fluid resistivity are made by lowering the probes to the bottom of the hole and logging up. Television logging is done while going into the hole. The correct speed is determined by observing the monitor and adjusting the control valve to suit the observers. Review Procedures GL-2 through GL-15 for step-by-step instructions.

9 0 1 1 7 7 4 0 5 2 0

4.2.6 Cleaning After Logging

1. When logging is completed, wipe clean the probes and camera and store securely in the logging van to avoid damage during transport.

2. Store the radioactive sources in their containers and place in the logging van for return to the radioactive source storage room.

3. Record on the log all information regarding well identification, depth, type of log, well diameter, water level, date, interval logged, instrument scale used, time constant, logging speed, procedure number, probe serial number, and calibration equipment numbers. Have the person operating the equipment sign the log. Remark on any problems encountered during logging or anything that could effect equipment response.

5.0 REFERENCES

- Job Safety Analysis on Operation of Government Vehicles
- Job Safety Analysis on Operation of the Downhole Television System
- Job Safety Analysis on Operation of the Geophysical Logging System
- Well Logging Procedures, GL-2 through GL-15.

9011774052 1

THIS PAGE INTENTIONALLY
LEFT BLANK

9 0 1 1 7 7 4 0 5 2 2

GL-2 TEMPERATURE PROBE PROCEDURE

1.0 APPLICABILITY

This procedure describes borehole temperature logging. Temperature logging provides for fluid level location, formation temperature measurements, cement top determination, fluid entry detection, injection profiling, and detection of casing leaks. All temperature logging is performed while lowering the tool into the well, minimizing the effect of the tool and cable on the ambient temperature. Maximum logging speed is 40 feet per minute. Safety precautions during logging are discussed in Procedure GL-1.

2.0 DEFINITIONS

- NBP - NIMS Bin Panel
- NIMS - nuclear instrument modules specifications
- SRP - solid state recorder panel
- LPM - line power module
- RMM - flowmeter module.

3.0 RESPONSIBLE STAFF

- Authorized Technical Staff.

4.0 PROCEDURE

4.1 Prerequisites

4.1.1 Equipment

- NIMS Bin Panel
- logging truck, reel,and cable
- AC generator
- temperature probe
- line power module
- ratemeter module
- chart recorder
- well sheave
- certified thermometer
- container of water for calibrating.

4.1.2 Qualification for Authorization

Technical staff will be considered authorized to operate the geophysical well logging equipment in accordance with procedures GL-1 through GL-15 if:

(a) they have completed a documented Training Assignment requiring the technical staff to read the applicable procedures before going into the field

(b) they have completed a documented Training Assignment of on-the-job training in the use of the geophysical logging equipment under the supervision of an authorized technical staff member. The authorized technical staff member will decide when a staff member in training is qualified to operate the equipment, or

(c) the cognizant line manager waives the documented training requirements in (a) and (b) above and authorizes the technical staff based on previous experience. Such a waver must be documented by memo or similar means and state the basis for the waiver.

4.2 Step-by-Step Instructions

Position Responsible: AUTHORIZED TECHNICAL STAFF

NOTE: Sonic logs should always be run with centralized tools where hole size permits. This is to ensure a near-constant travel time through the borehole and symmetrical response from all quadrants with no destructive interference of sound reaching the receiver because of unequal radial travel time paths between the tool and the borehole wall.

4.2.1 Setting up and Calibrating Equipment

1. Turn the power ON-OFF switch to ON.
2. Turn the SRP main power switch to ON.
3. Turn the LPM CURRENT-VOLTAGE switch to CURRENT.
4. Move the LPM CURRENT ADJUST to 0.
5. Set the LPM instrument power switch to POSITIVE.
6. Turn the LPM CURRENT ADJUST control to 50 milliamps.
7. Set the RMM MODE switch to LINE.
8. Set the RMM CPS switch to 500.
9. Set the RMM TC switch to .01.
10. Set the RMM RECORDER OUTPUT to 1000.
11. Set the RMM POSITIVE-NEGATIVE switch to POSITIVE.
12. Set the RMM REVERSE-NORMAL switch to NORMAL.
13. Use recorder amplifier #2 for temperature measurements. Set ZERO at 490 and SPAN at 248. This will give a temperature range of 20° across the chart in °C. The probe is calibrated from 10° to 70°C.

9017740524

14. Place the probe in a container of water. Use a certified thermometer to read the water temperature. Record this on the chart.

15. Use the RMM SUPPRESSION control to set the pen to a desired position on the chart. Example: the temperature span is set for 10° to 30°C across the chart and water temperature is 20°C. The pen would be set at the center of the chart paper. If the temperature reaches 30°C while logging, stop and reset the pen to the left edge of the chart paper using the RMM SUPPRESSION control, making the span now read 30° to 50°C.

16. Place tool in the well and set to proper measuring point. Tool zero is at the bottom of the probe.

17. Set the UP-DOWN direction switch on the SRP in the down position and log going into the hole. Typical logging speed is 30 feet per minute.

18. When the bottom of the hole is reached, log back up 30 feet for system check. Temperature may vary slightly because the water was disturbed on the way down.

19. Bring the probe to the surface and recheck the calibration by placing the probe in the water container and reading the temperature with the certified thermometer. Record this on the chart, also record the serial number of the thermometer on the chart. If the temperature is off by over 0.3 of a degree, recalibrate and rerun the log. Record this on the chart, also record the serial number of the certified thermometer on the chart.

20. Review log for errors and fill in the log heading as discussed in Procedure GL-1.

9 0 1 1 7 7 4 0 5 2 5

THIS PAGE INTENTIONALLY
LEFT BLANK

9 0 1 1 7 7 4 0 5 2 6

GL-3 CALIPER PROBE PROCEDURE

1.0 APPLICABILITY

This procedure describes borehole caliper logging. Caliper logging is used to determine hole and casing diameter, and locate caved zones, casing, and the absence of casing. The caliper tool is provided with different length caliper arms, depending on the diameter of the hole to be measured. The 6-inch arms extend to 18 inches and the 18 inch arms extend to 32 inches. The maximum logging speed is 50 feet per minute. Safety precautions during logging are discussed in Procedure GL-1.

2.0 DEFINITIONS

- NBP - NIMS Bin Panel
- NIMS - nuclear instrument modules
- SRP - solid state recorder panel
- LPM - line power module
- RMM - rate meter module.

3.0 RESPONSIBLE STAFF

- Authorized Technical Staff.

4.0 PROCEDURE

4.1 Prerequisites

4.1.1 Equipment

- logging truck with cable and reel
- AC power source
- NIMS Bin Panel
- chart recorder
- line power module
- rate meter module
- caliper probe
- caliper probe calibrator
- well sheave.

4.1.2 Qualification for Authorization

Technical staff will be considered authorized to operate the geophysical well logging equipment in accordance with procedures GL-1 through GL-15 if:

(a) they have completed a documented Training Assignment requiring the technical staff to read the applicable procedures before going into the field

(b) they have completed a documented Training Assignment of on-the-job training in the use of the geophysical logging equipment under the

supervision of an authorized technical staff member. The authorized technical staff member will decide when a staff member in training is qualified to operate the equipment, or

(c) the cognizant line manager waives the documented training requirements in (a) and (b) above and authorizes the technical staff based on previous experience. Such a waver must be documented by memo or similar means and state the basis for the waiver.

4.2 Step-by-Step Instructions

Position Responsible: AUTHORIZED TECHNICAL STAFF

NOTE: Sonic logs should always be run with centralized tools where hole size permits. This is to ensure a near-constant travel time through the borehole and symmetrical response from all quadrants with no destructive interference of sound reaching the receiver because of unequal radial travel time paths between the tool and the borehole wall.

4.2.1 Attaching Tool and Opening Arms

1. Set the NBP power ON-OFF switch to ON.
2. Set the SRP main power switch to ON.
3. Attach caliper tool to the cable head.
4. Set the LPM CURRENT-VOLTAGE switch to VOLTAGE.
5. Set the LPM HIGH-NORMAL switch to HIGH.
6. Set the LPM NEG-OFF-POS switch to NEGATIVE.
7. Adjust LPM CURRENT ADJUST control to 200 volts.
8. Switch CURRENT-VOLTAGE switch to CURRENT (meter will read full scale). Arms will open fully in 20 to 30 seconds. Current will drop to 0.
9. Set the LPM NEG-OFF-POS switch to OFF.
10. Set the LPM CURRENT ADJUST to 0.

4.2.2 Setting up and Calibrating

1. Set the LMP NEG-OFF-POS switch to POSITIVE.
2. Adjust LPM current to read 60 milliamps.
3. Set the RMM mode switch to LINE.

4. Set the RMM POSITIVE-NEGATIVE switch to POSITIVE on tool #C-001, and NEGATIVE on tool #C-002.

5. Set the RMM REVERSE-NORMAL switch to NORMAL.

6. Set the RMM TC switch to 1.

7. Set the RMM CPS switch to 100 for tool #C-001 and 500 for tool #C-002.

8. Switch on a recorder amplifier.

9. Depress the ZERO switch on the RMM and adjust the pen to a desired position on the chart using the recorder amplifier zero potentiometer.

10. Close the caliper arms by placing the calibrator over the arms.

11. Bring the recorder pen to zero by using the SUPPRESSION control on the RMM.

12. Remove the calibrator, letting the arms open to maximum.

13. Use the recorder amplifier span control to adjust the desired span on the chart.

14. Repeat steps 11 through 13 until desired span has been set.

15. Place calibrator on caliper arms.

16. Record calibration settings on the chart. The short arms will measure from 2 to 17.75 inches. The long arms will measure from 2 to 32 inches.

4.2.3 Preparing to Log

1. Set the RMM mode switch to OFF.

2. Set the LPM NEG-OFF-POS switch to POSITIVE.

3. Set the LPM CURRENT-VOLTAGE switch to VOLTAGE.

4. Adjust LMP current adjust to 200 volts.

5. Set the LPM CURRENT-VOLTAGE switch to CURRENT. Caliper motor will run for 20 to 30 seconds closing the arms and the current will drop to 0.

6. Set the LPM NEG-OFF-POS switch to OFF.

7. Place probe in well and set to proper measuring point. Tool zero is at tips of tool arms.

4.2.4 Logging the Hole

1. Run tool into well to deepest known casing size.

2. Open arms and, using SUPPRESSION control, set pen to match casing size to calibration.

3. Close arms, proceed to bottom of hole.

4. Place the SRP transmission lever to the UP position.

5. Open the arms and log up. Maximum logging speed is 50 feet per minute.

6. Log back into known casing size to make sure instruments have not drifted.

7. For system check, rerun a 30-foot section, or if well has been logged before, overlap a 30-foot section of previous log.

8. Close the arms and bring the probe to the surface.

9. Review the log for errors. Fill in the log heading as discussed in Procedure GL-1.

0 3 5 0 4 7 1 1 0 6

GL-4 SONIC PROBE PROCEDURE

1.0 APPLICABILITY

This procedure describes borehole sonic bond logging. Sonic logging provides an indication of formation density, quality of the casing bond to the formation, and grout or cement voids in the well. The sonic probe must be operated in a liquid-filled hole and the maximum logging speed is 60 feet per minute. Safety precautions during logging are described in Procedure GL-1.

2.0 DEFINITIONS

- NBP - NIMS Bin Panel
- NIMS - nuclear instrument modules specifications
- SRP - solid state recorder panel
- Scope - oscilloscope
- SBM - sonic bond module
- PA - pipe amplitude
- FA - formation amplitude.

3.0 RESPONSIBLE STAFF

- Authorized Technical Staff.

4.0 PROCEDURE

4.1 Prerequisites

4.1.1 Equipment

- logging truck with cable and reel
- AC power source
- NIMS Bin Panel
- chart recorder
- line power module
- sonic bond module
- sonic bond probe
- oscilloscope
- probe centralizers
- well sheave.

4.1.2 Qualification for Authorization

Technical staff will be considered authorized to operate the geophysical well logging equipment in accordance with procedures GL-1 through GL-15 if:

(a) they have completed a documented Training Assignment requiring the technical staff to read the applicable procedures before going into the field

9011774053

(b) they have completed a documented Training Assignment of on-the-job training in the use of the geophysical logging equipment under the supervision of an authorized technical staff member. The authorized technical staff member will decide when a staff member in training is qualified to operate the equipment, or

(c) the cognizant line manager waives the documented training requirements in (a) and (b) above and authorizes the technical staff based on previous experience. Such a waver must be documented by memo or similar means and state the basis for the waiver.

4.2 Step-by-Step Instructions

Position Responsible: AUTHORIZED TECHNICAL STAFF

NOTE: Sonic logs should always be run with centralized tools where hole size permits. This is to ensure a near-constant travel time through the borehole and symmetrical response from all quadrants with no destructive interference of sound reaching the receiver because of unequal radial travel time paths between the tool and the borehole wall.

4.2.1 Attaching Probe to Cable Head and Applying Power

1. Set the NBP power ON-OFF switch to ON.

2. Set the SRP main power switch to ON.

3. Set the SBM power switch to ON.

4. Set the scope ON-OFF switch to ON.

5. Set the LPM NEG-OFF-POS switch to POSITIVE. Adjust current control fully clockwise. Current should read 60 to 65 milliamps. Voltage should read 300 volts. A clicking sound should be coming from the transmitter.

6. Place probe in well and set to proper measuring point. Probe zero is at bottom of probe.

4.2.2 Setting up the Scope

1. Set channel 1 to 0.5 V/cm and sweep time to 50 μsec/cm. When logging use 1 V/cm and 0.1 μsec/cm.

4.2.3 Setting up the SBM

1. Set dials to zero position.

2. Set LOG-ZERO to LOG.

3. Set LOG-FT ZERO to LOG.

9011774053 2

4. Set scope A-B to A. Position A shows complete oscilloscope pattern and position B shows only the gated interval.

5. Set PA-FA to PA. For cement bond logging and logging inside the casing, use PA. For open hole logging, use FA.

6. Adjust SYNC control to obtain a scope trace. Adjust until trace appears and advance 1/2 division.

4.2.4 Calibrating the Equipment

To calibrate the amplitude curve:

1. Lower the tool into the well and stop it at a point in the well which is in fluid, in free pipe, and between casing collars. In cases where no free casing can be found in the well, return the logging tool to the surface and adjust travel time and amplitude to that observed with the tool in a water-filled aluminum tube.

2. Adjust SBM SIGNAL dial for 1/2 to 1 volt, that is, adjust amplitude for the first positive return signal to 1/2 to 1 volt. One vertical division on the scope screen equals 1/2 volt because the sensitivity is set on 0.5 volts/cm or 0.5 volts/chart division.

3. As the SYNC is turned up, a trace will appear on the scope. The SIGNAL should be increased and then increase the SYNC again until the proper trace is seen on the scope. An example is shown below.

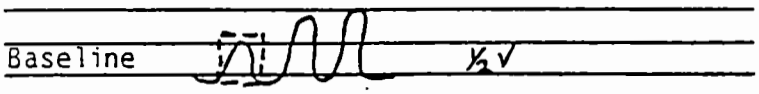

Enclosed block is first positive return signal

4. Note position of the first positive return signal on the scope screen. (The part of the trace adjusted for 1/2 or 1 volt.). Switch SCOPE selector switch on SBM to B position.

5. Adjust the gate DELAY control until the left edge of the gate is aligned with the left edge of the first positive return signal. It may be necessary to turn the GATE width control up as needed to properly position the left edge of the gate to the left side of the first positive return signal.

6. Adjust the GATE width control until the right edge of the gate is aligned with the right edge of the first positive return signal. The gated interval should look like this:

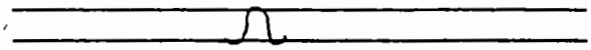

0.5 volts/division

If the gate is properly positioned when the SCOPE switch is changed from A to B, the "gated interval" will lay perfectly on the first positive return signal. If it doesn't, readjust the GATE and DELAY controls.

7. Turn on the recorder pen #2. Switch LOG-ZERO switch to ZERO position. Adjust pen with recorder zero control to left side of left chart.

8. Switch LOG-ZERO switch to LOG position. Adjust OUTPUT control on SBM to move pen to center of left chart. Switch back and forth from LOG to ZERO to position pen properly. Leave switch on LOG position when dials have been set up.

4.2.5 Setting up a formation time curve

1. Turn FT TRIGGER on SBM to obtain flags on scope trace.

Flags

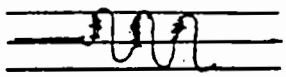

2. Adjust FT TRIGGER until the bottom of the first flag is even with the baseline of the scope trace.

3. Switch LOG-FT ZERO switch to ZERO.

4. Turn on recorder pen #3. Position it to the right side of the right chart using the recorder zero control.

5. Switch LOG-FT ZERO switch to LOG.

6. Adjust the FT OUTPUT control to indicate 58 μsec. 11-3/5 chart divisions to the left. (5 μsec = 1 chart division.)

7. With the recorder zero control, move the pen to the right to suppress 40 μsec (8 chart divisions). The pen should be 3-3/5 chart divisions from the right side. This adjustment makes the right side of the chart 40 μsec and the left side 140 μsec.

8. Turn CLAMP full clockwise to position 10.

9. Turn FT TRIGGER to zero. Turn CLAMP counterclockwise to set pen two chart divisions from left side of chart.

10. Readjust FT TRIGGER as in step 1 to obtain flags. Pen #3 should return to 3 3/5 chart divisions from the right side of the chart paper. Position bottom of first flag even with the baseline.

4.2.6 Running the Log

1. Lower tool to desired depth.

2. Place the SRP transmission lever in the UP position.

3. Log up. Maximum logging speed is 40 feet per minute.

4. For system check, rerun a 30-foot section, or if the well has been logged before, overlap a 30-foot section of previous log.

5. Return the probe to the place of setup and check for drift. If the curve is off by 10%, recalibrate and rerun the log.

6. Review the log for errors. Fill in the log heading as discussed in Procedure GL-1.

9011774053 5

THIS PAGE INTENTIONALLY
LEFT BLANK

9 0 1 1 7 7 4 0 5 3 5

GL-5 NEUTRON PROBE PROCEDURE

1.0 APPLICABILITY

This procedure describes borehole neutron logging. The neutron logging system provides a means for determining formation hydrogen content, moisture content, and porosity. Maximum logging speed is 25 feet per minute. Safety precautions during logging are discussed in Procedure GL-1.

2.0 DEFINITIONS

- NBP - NIMS Bin Panel
- NIMS - nuclear instrument modules specifications
- SRP - solid state recorder panel
- LPM - line power module
- RMM - rate meter module.

3.0 RESPONSIBLE STAFF

- Authorized Technical Staff.

4.0 PROCEDURE

4.1 Prerequisites

4.1.1 Equipment

- logging truck with cable and reel
- AC power source
- NIMS Bin Panel
- chart recorder
- line power module
- rate meter module
- neutron probe
- 3-Ci ^{241}Am Be source
- well sheave
- 50-mCi ^{241}Am Be calibration source.

4.1.2 Qualification for Authorization

Technical staff will be considered authorized to operate the geophysical well logging equipment in accordance with procedures GL-1 through GL-15 if:

(a) they have completed a documented Training Assignment requiring the technical staff to read the applicable procedures before going into the field

(b) they have completed a documented Training Assignment of on-the-job training in the use of the geophysical logging equipment under the supervision of an authorized technical staff member. The authorized technical staff member will decide when a staff member in training is qualified to operate the equipment, or

(c) the cognizant line manager waives the documented training requirements in (a) and (b) above and authorizes the technical staff based on previous experience. Such a waver must be documented by memo or similar means and state the basis for the waiver.

4.2 Step-by-Step Instructions

Position Responsible: AUTHORIZED TECHNICAL STAFF

NOTE: Sonic logs should always be run with centralized tools where hole size permits. This is to ensure a near-constant travel time through the borehole and symmetrical response from all quadrants with no destructive interference of sound reaching the receiver because of unequal radial travel time paths between the tool and the borehole wall.

4.2.1 Setting up the equipment

1. Attach a 3-Ci Am Be source to the probe and the probe to the cable head.
2. Switch on the NBP and SRP power.
3. Set the RMM MODE switch to LINE.
4. Turn the RMM SUPPRESSION and RECORDER OUTPUT control fully clockwise.
5. Set the RMM TC switch to 2.
6. Set the RMM POSITIVE-NEGATIVE polarity switch to POSITIVE.
7. Set the RMM REVERSE-NORMAL switch to NORMAL.
8. Set the LPM CURRENT-VOLTAGE switch to CURRENT.
9. Set the LPM NEG-OFF-POS switch to POSITIVE.
10. Turn the LPM CURRENT ADJUST to 70 milliamps.

4.2.2 Calibrating the Equipment

1. Set the RMM MODE switch to CAL 100.
2. Set the RMM CPS switch to 100.

9011774053 9

3. Switch SRP recorder amplifier to ON.

4. Depress ZERO on the RMM and hold in.

5. Adjust recorder amplifier ZERO to position pen to its preselected zero point on the chart.

6. Release the ZERO on the RMM.

7. Adjust the recorder amplifier SPAN control to the desired position on the chart. Record this span on the chart.

8. Set the RMM MODE switch to LINE.

9. Set the RMM CPS switch to 500.

10. With the probe resting on a dry surface at least 3 feet above the ground, take a 1-minute background count and record this on the chart. Use the time drive to advance the recorder chart.

11. Place the 50-mCi ^{241}Am Be neutron calibrator at the proper position on the probe and take a 1-minute count. Record this on the chart.

4.2.3 Logging

1. Place the probe in the well and set to proper measuring point. Probe zero is at the detector tube.

2. Change CPS switch to 1000 or 5000.

3. Lower the probe to bottom of the hole.

4. Place the SRP transmission lever in the UP position.

5. Run the log. Maximum logging speed is 25 feet per minute. Rerun a 30-foot section for system check, or if well has been logged before, overlap a 30-foot section of the previous log.

4.2.4 Checking the Calibration

1. Repeat steps 9, 10, and 11 from Section 4.2.2.

2. Record the span on the chart.

3. If the count rate does not match the calibration background and source count by 20 counts per second, the probe has malfunctioned and the log should not be used.

4. Review the log for errors and fill in the heading as discussed in Procedure GL-1.

9 0 1 1 7 7 4 0 5 3 9

THIS PAGE INTENTIONALLY
LEFT BLANK

9017740540

GL-6 BULK DENSITY PROBE PROCEDURE

1.0 APPLICABILITY

This procedure describes borehole bulk density logging. The bulk density logging system provides continuous recording of bulk density of materials surrounding the borehole. Maximum logging speed is 25 feet per minute. Safety precautions during logging are discussed in Procedure GL-1.

2.0 DEFINITIONS

- NPB - NIMS Bin Panel
- NIMS - nuclear instrument modules specifications
- SRP - solid state recorder panel
- LPM - line power module
- RMM - rate meter module.

3.0 RESPONSIBLE STAFF

- Authorized Technical Staff.

4.0 PROCEDURE

4.1 Prerequisites

4.1.1 Equipment

- logging truck with cable and reel
- AC power source
- NIMS Bin Panel
- chart recorder
- line power module
- rate meter module
- density probe
- 125-mCi ^{137}Cs source
- well sheave.

4.1.2 Qualification for Authorization

Technical staff will be considered authorized to operate the geophysical well logging equipment in accordance with procedures GL-1 through GL-15 if:

(a) they have completed a documented Training Assignment requiring the technical staff to read the applicable procedures before going into the field

(b) they have completed a documented Training Assignment of on-the-job training in the use of the geophysical logging equipment under the supervision of an authorized technical staff member. The authorized

9011774054

technical staff member will decide when a staff member in training is qualified to operate the equipment, or

(c) the cognizant line manager waives the documented training requirements in (a) and (b) above and authorizes the technical staff based on previous experience. Such a waver must be documented by memo or similar means and state the basis for the waiver.

4.2 Step-by-Step Instructions

Position Responsible: AUTHORIZED TECHNICAL STAFF

NOTE: Sonic logs should always be run with centralized tools where hole size permits. This is to ensure a near-constant travel time through the borehole and symmetrical response from all quadrants with no destructive interference of sound reaching the receiver because of unequal radial travel time paths between the tool and the borehole wall.

4.2.1 Setting up the Equipment

1. Attach probe to cable head and the 125-mCi ^{137}Cs source to the probe.
2. Place probe in well and set to proper measuring point. Probe zero is at the detector, 3.7 feet from top of cable head spring.
3. Set the NBP and SRP power switches to ON.
4. Set the RMM NORMAL-REVERSE switch to REVERSE.
5. Set the RMM MODE switch to LINE.
6. Turn the RMM SUPPRESSION and RECORDER OUTPUT control fully clockwise.
7. Set the RMM TC switch to 3.
8. Set the RMM POSITIVE-NEGATIVE switch to NEGATIVE.
9. Set the LPM NEG-OFF-POS switch to POSITIVE.
10. Turn the LPM CURRENT ADJUST to 70 milliamps.
11. Set the RMM MODE switch to 100 CAL.
12. Set the RMM CPS switch to 100.
13. Switch a recorder amplifier to ON.
14. Depress the zero on the RMM and hold in.

9011774054 2

15. Adjust the recorder amplifier on the SRP to ZERO to position pen to its preselected position on the right side of the chart.

16. Release zero on the RMM.

17. Adjust recorder SPAN control on the SRP to desired position on the left side of the chart. Record this span on the chart.

18. Set the RMM MODE switch to LINE.

19. Set the RMM CPS switch to 500.

4.2.2 Running the Log

1. Lower probe to bottom of the hole.

2. Place SRP transmission lever in the UP position.

3. Run the log. Maximum logging speed is 25 feet per minute.

4. Rerun a 30-foot section for system check, or if well has been logged before, overlap a 30-foot section of previous log.

5. Check the span and record it on the chart.

6. Review the log for errors and fill in the heading as discussed in Procedure GL-1.

9 0 1 1 7 7 4 0 5 4 3

THIS PAGE INTENTIONALLY
LEFT BLANK

9 0 1 1 7 7 4 0 5 4 4

GL-7 GAMMA RAY PROBE PROCEDURE

1.0 APPLICABILITY

This procedure describes borehole gamma ray logging. Gamma ray logs are used for the determination of lithology and measurement of natural and induced gamma radiation. Gamma ray logs may be recorded in cased or uncased wells, fluid-filled or dry. Maximum logging speed is 20 feet per minute. Safety precautions during logging are discussed in Procedure GL-1.

2.0 DEFINITIONS

- NBP - NIMS Bin Panel
- NIMS - nuclear instrument modules
- SRP - solid state recorder panel
- LPM - line power module
- RMM - rate meter module.

3.0 RESPONSIBLE STAFF

- Authorized Technical Staff.

4.0 PROCEDURE

4.1 Prerequisites

4.1.1 Equipment

- logging truck with cable and reel
- AC power source
- NIMS Bin Panel
- chart recorder
- line power module
- rate meter module
- gamma ray probe
- well sheave
- 0.02-mCi ^{226}Ra calibration source.

4.1.2 Qualification for Authorization

Technical staff will be considered authorized to operate the geophysical well logging equipment in accordance with procedures GL-1 through GL-15 if:

(a) they have completed a documented Training Assignment requiring the technical staff to read the applicable procedures before going into the field

(b) they have completed a documented Training Assignment of on-the-job training in the use of the geophysical logging equipment under the supervision of an authorized technical staff member. The authorized

9011174054 5

technical staff member will decide when a staff member in training is qualified to operate the equipment, or

(c) the cognizant line manager waives the documented training requirements in (a) and (b) above and authorizes the technical staff based on previous experience. Such a waver must be documented by memo or similar means and state the basis for the waiver.

4.2 Step-by-Step Instructions

Position Responsible: AUTHORIZED TECHNICAL STAFF

NOTE: Sonic logs should always be run with centralized tools where hole size permits. This is to ensure a near-constant travel time through the borehole and symmetrical response from all quadrants with no destructive interference of sound reaching the receiver because of unequal radial travel time paths between the tool and the borehole wall.

4.2.1 Setting up Equipment

1. SET NBP and SRP switches to ON.
2. Turn the RMM SUPPRESSION and RECORDER OUTPUT controls fully clockwise.
3. Set the RMM TC switch to 3.
4. Set the RMM POSITIVE-NEGATIVE polarity switch to NEGATIVE.
5. Set the RMM REVERSE-NORMAL switch to NORMAL.
6. Set the LPM CURRENT-VOLTAGE switch to CURRENT.
7. Set the LPM INSTRUMENT POWER switch to POSITIVE.
8. Set the LPM CURRENT ADJUST to 75 milliamps for probe No. NG-001. For probe No. CG-27A97 use 60 milliamps.

4.2.2 Calibrating the Equipment

1. Set the RMM CPS switch to 100.
2. Set the RMM switch to CAL 100. RMM CPS meter should read 100 cps at this point.
3. Switch a recorder amplifier on the SRP to ON.
4. Depress the zero on the RMM and hold in.

9 0 1 1 7 7 4 0 5 4 6

5. Adjust recorder ZERO on the SRP to position pen to its preselected position on the chart.

6. Release the zero on the RMM.

7. Adjust the SPAN control on the SRP to position the pen to a desired position on the chart.

8. Record this span on the chart.

9. Set the RMM MODE switch to LINE.

10. Set the RMM CPS switch to 500.

11. Record gamma ray background in air, at least 50 feet away from any radioactive source.

12. Record the probe response to the .02-mCi ^{226}Ra source placed perpendicular to the probe and 42 inches from the detector. Make sure the source is pointing toward the top of the probe.

4.2.3 Logging

1. Place probe in the well and set depth to proper measuring point. Probe zero is at the counting tube.

2. Proceed to the bottom of the hole.

3. Place the SRP transmission lever in the UP position.

4. Log up. Log at 15 feet per minute.

5. For system check, rerun a 30-foot section, or if the well has been logged before, overlap a 30-foot section of the previously logged section.

4.2.4 Checking Calibration

1. Record gamma ray background in air, at least 50 feet away from any radioactive source.

2. Record the probe response to the .02-mCi ^{226}Ra source.

3. Record the span.

4. If the calibration check does not match the calibration count rate by 25 counts per minute, the probe has malfunctioned and the log should not be used.

5. Review the log for errors, fill in the heading as discussed in Procedure GL-1.

THIS PAGE INTENTIONALLY
LEFT BLANK

3011774054 8

GL-7A GROSS GAMMA-RAY LOGGING PROCEDURE - Work Requests from Westinghouse Hanford Company

1.0 APPLICABILITY

This procedure describes borehole gross gamma-ray logging performed for Westinghouse Hanford Company. Gamma-ray logs are used to help determine the subsurface lithology. Gamma-ray logs may be recorded in water-filled or dry wells that are uncased or cased with a single steel casing.

Safety precautions during logging are discussed in Procedure GL-1.

Field calibration and operation instructions presented here conform as much as possible to American Petroleum Institute Standards (API 1974), as well as accepted uranium industry standards for gross-count gamma-ray logging (see IAEA 1982).

Responsibilities of Westinghouse Hanford Company staff presented in this procedure are included for information only.

2.0 DEFINITIONS

- analog gamma-ray logging system: a logging system that detects gamma rays and produces an electrical signal that is proportional to the rate at which gamma rays are detected

- correction factor: a numerical factor that is applied to logging measurements made under nonstandard conditions to derive the equivalent measurement that would have been made under standard conditions

- gamma-ray detector: an instrument which contains an active material within which photons interact, and an electronics package that converts signals (e.g., light or electric charge) from the photon interactions into recordable electronic signals

- gamma-ray probe: a probe designed to respond to gamma-ray intensity in a borehole or well

- gross-gamma-ray probe: a gamma-ray probe for which the electronic signal output is a sum of all detected radiation in the measurement time interval. Signal outputs are not sorted according to the energies of the photons that produced them.

- probe: the logging tool, i.e., the portion of the logging system, exclusive of the cable, that contains measurement instrumentation which is lowered into the borehole or well

- probe factor: a numerical constant, determined by measurements at a standard calibration model, and used for the direct conversion of logging system responses into standard units of measure

9 0 1 1 7 7 4 0 5 4 9

- well logging: the process of recording measurements in a borehole or well, as a function of depth.

3.0 RESPONSIBLE STAFF

- authorized technical staff.

NOTE: Approval of persons assigned to this position to perform gross gamma-ray logging for Westinghouse Hanford Company is required by the Manager, Geosciences Group, Environmental Engineering and Technology Function, Westinghouse Hanford Company.

4.0 PROCEDURE

4.1 Prerequisites

4.1.1 Equipment

- logging truck with cable and reel
- AC power source (generator or other)
- NIMS Bin Panel
- line-power module
- rate-meter module model RMM208, serial No. 185 or 182
- gamma-ray probe No. CG27A97
- well sheave
- 0.02-mCi ^{226}Ra calibration source No. RA20S-204
- calibration source holder.

4.1.2 Qualification for Authorization

Technical staff will be considered authorized to operate the gross-gamma geophysical well logging equipment in accordance with this procedure if they have the following qualifications, training, and approvals:

(a) Associates degree in electronics, measurement systems, or mechanical engineering technology, or 5 years' direct experience with electronic measurement systems.

(b) Background in geology, geotechnical engineering, or geophysics from 2 years of formal college education or 5 years of direct work experience.

(c) Completion of a documented Training Assignment requiring the technical staff to complete a 24-hour training course in borehole geophysical logging theory and practice.

(d) Completion of a documented Training Assignment requiring the technical staff to read the applicable PNL and Westinghouse Hanford Company procedures before going into the field.

(e) Completion of a documented Training Assignment of on-the-job training in the use of the geophysical logging equipment under the supervision

of an authorized technical staff member. The authorized technical staff member will decide when a staff member in training is qualified to operate the equipment, or

(f) The cognizant line manager waives the documented training requirements in (e) above and authorizes the technical staff based on previous experience. Such a waiver shall be documented by memo or similar means and state the basis for the waiver.

(g) Approval by the Manager, Geosciences Group, Environmental Engineering and Technology Function, Westinghouse Hanford Company.

4.1.3 Other Prerequisites

The Westinghouse Hanford Company logging witness must be present for all of the work, including the set-up and pre- and post-survey calibrations.

The logging technician shall work closely with the Westinghouse Hanford Company logging witness to be certain that the witness has full knowledge of the details of each logging run.

4.2 Step-by-Step Instructions

Position Responsible: AUTHORIZED TECHNICAL STAFF

NOTE: Copies of the attached log header are to be used to record pertinent information for each logging session.

4.2.1 Setting up Equipment

1. Start the generators and turn on the NIMS bin power and each of the individual module power switches.

2. Be certain that the rate meter SUPPRESSION and RECORDER OUTPUT switches are set to the "10" position.

3. Set the rate meter POSITIVE-NEGATIVE polarity switch to NEGATIVE.

4. Set the rate meter REVERSE-NORMAL switch to NORMAL.

5. Set the line power module CURRENT-VOLTAGE switch to CURRENT.

6. Set the line power module INSTRUMENT POWER switch to POSITIVE.

7. Set the line power module CURRENT ADJUST to 60 milliamps for use with probe No. CG-27A97.

8. While the equipment is in the warm-up period, fill in log-header information.

   (a) Record base-calibration reference and date on the log header. The date must be less than 1 year old to be valid.

(b) If a particular data field is not applicable to a particular logging session, so indicate by writing N/A in that field.

(c) Make all log header information and markings on the chart paper, including recorder pen markings, with waterproof, nonerasable ink. Line out corrections with a single line, and place with the correct entry next to the incorrect one. Initial and date the correction.

(d) Tape the log header sheets to the original log on completion of the logging session.

(e) Upon completion of the logging session, the original log becomes the responsibility of Westinghouse Hanford Company's logging witness, who must add any information to the log header that was not available at the time of logging, such as casing elevation or borehole survey coordinates.

A 2-page log header (attached) (a well information page and a logging information page) will be attached to all gross-gamma-ray logs. This is the pertinent information for qualifying the log.

NOTE: Deviations from specified requirements or special instructions should be handled in the following manner.

Critical deviations would be deviations from the procedure having to do with calibrations, data acquisition rates, equipment operations, or mode of operation that would have a significant impact on the quality of the data. These deviations are allowed if prior consent is obtained from Westinghouse Hanford Company's logging geophysicist. That consent can be verbal if time is of the essence, but written approval for the deviation is preferred.

For any deviations, a follow-up letter must be prepared by the Westinghouse Hanford Company logging witness to be sent to the Westinghouse Hanford Company logging geophysicist. That letter must describe the deviation, identify any possible impacts on the quality of the data, justify the reasoning for the deviation, indicate whether the deviation is a critical or noncritical deviation, and identify how approval for the deviation was obtained.

Any deviations <u>shall be</u> clearly identified on the log header in the comments section with a short note describing the deviation.

NOTE: A depth or elevation datum must be established during set up (usually the top of the casing) and recorded on the log header. This datum must be preserved long enough for a survey to be completed to determine the datum elevation. (It is the responsibility of the logging field witness to ensure that the datum is preserved until it is surveyed).

1. Record the datum elevation if available, the ground-surface elevation and the approximate difference in elevation from that of the datum to that of the ground surface.

9017405 52

2. If water is present, determine the water level to within ±0.1 foot as measured from the established elevation datum and record on the log header.

3. Obtain a sample of the water with a hand bailer, measure the water temperature with a hand-held thermometer, and record it on the log header. If the water appears cloudy and laden with suspended particles, note that on the log header.

4.2.2 Calibrating the Equipment

Position Responsible: AUTHORIZED TECHNICAL STAFF

A base calibration of the equipment is required once a year at a minimum. This calibration must be reviewed and approved by Westinghouse Hanford Company logging geophysicists. It should be similar to that reported in Brodeur and Koizumi (1989), and it should include an instrumentation calibration, a dead-time measurement, a primary source calibration, and a field source correlation.

After equipment warm up, perform a pre-survey calibration.

1. Set the rate meter output scale to 5000 CPS with a time constant of 1 second and the mode switch on "input."

2. Run a shielded cable from the output of the pulse generator to the input on the rate meter.

3. Set the pulse generator to produce 5000 counts per second.

4. Place the chart recorder on line with the vertical axis set on a time base with a chart speed of at least 1 inch per minute.

5. Press the rate meter "zero" contact switch and zero the chart recorder by adjusting the recorder zero knob.

6. Release the zero switch and adjust the chart recorder span so that the pen corresponds to the 10th major division on the chart paper.

7. Record at least 30 seconds of the zero output and 1 minute of the full-scale output.

8. Label the chart record as "Pre-survey instrumentation calibration."

NOTE: Once the chart recorder is set, the zero and span dials shall not be changed for the entire logging session.

After the above pre-survey calibration, perform a pre-survey field source calibration.

1. Place the gamma probe in a pipe clamp or suspend it so that it is at least 2 feet away from any solid matter.

2. Place the field calibration source in the source holder and place the holder in position 1 (see Figure 1) on the probe.

3. Switch the rate meter mode to "Line," allow the chart recorder to settle and record at least 1 minute of the gamma activity.

4. Place the source holder in position 2 (see Figure 1) and record 1 minute of the gamma activity (change the rate meter output settings if necessary to prevent chart saturation).

5. Remove the source holder, set the rate meter output to the lowest scale, and take a background reading for at least 1 minute. The probe must be left in the same position as in the position 1 and 2 calibration. (NOTE: It will be required to increase the time constant to at least 2 seconds in order to suppress statistical noise during the background measurement.)

6. Label the chart record as "Pre-survey field calibration" and label the individual traces as "position 1," "position 2," and "background."

NOTE: Because the linearity of the rate meter and chart recorder are established during the base calibration, it is not necessary to readjust the chart recorder zero and span when changing rate-meter output scales.

7. Determine the "position 1," "position 2," and "background"-activity values from the chart records and write them on the log header under the logging information section. The "position 1" and "position 2" data are converted to equivalent uranium concentration (eU) by applying the following formula:

$$C1 = (A1 - BO) * PF$$

$$C2 = (A2 - BO) * PF$$

where C1 = eU concentration for position 1
C2 = eU concentration for position 2
A1 = recorded activity in position 1
A2 = recorded activity in position 2
BO = recorded background activity
PF = probe factor determined in base calibration.

C1 and C2 must agree with the base calibration field-source correlation values to within 8%. If the data do not correlate, the instrumentation is considered suspect and must be repaired.

9011774054

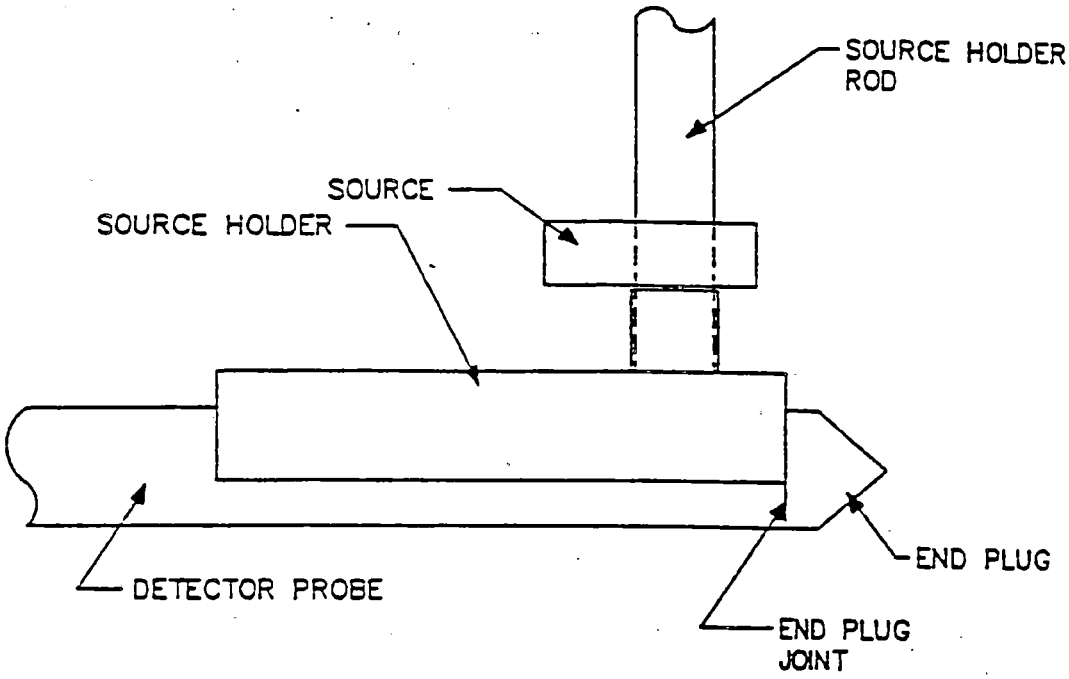

POSITION 1

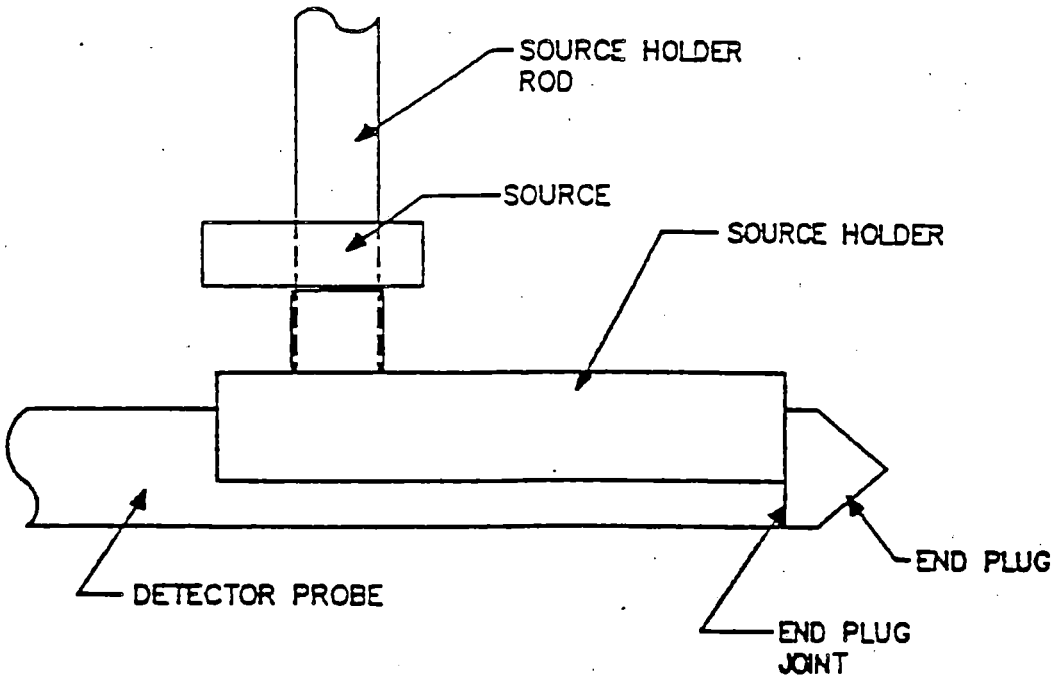

POSITION 2

FIGURE 1. Field Calibration Source Holder Diagram

4.2.3 Logging

If there is water in the borehole, the gross-gamma tool shall be operated in an eccentered position in the borehole, i.e., pressed against one side of the borehole casing. This requires a bowspring to be attached to the tool before the tool is lowered into the borehole. The bowspring must be appropriately emplaced on the probe so that the most sensitive part of the probe faces the borehole wall.

1. Correlate the center of the sodium iodide crystal inside the probe with the established depth datum for the particular borehole being logged. The AUTHORIZED TECHNICAL STAFF, with the logging witness's concurrence, will determine how best to do this. Make certain that the chart record and depth indicator correspond appropriately.

NOTE: If a sheave is placed at the top of the borehole on the well casing, the logging cable should be marked with a permanent mark at an established point above the tool scribe mark (5 feet or so). That mark shall be used for depth correlations. (The logging operation will begin and end at the specified depth rather than zero depth.)

2. Place the probe in the well and set the depth to the proper measuring point. Probe zero is at the center of the NaI crystal.

3. Lower the tool to the bottom of the hole.

4. Set the chart recorder so that the vertical gradations correspond to the depth shown on the depth indicator.

5. Lock the chart-recorder gear drive into place on the gear that produces a vertical chart scale of 1 inch per 10 feet, or 1 division per foot. (Place the SRP transmission lever in the UP position.)

6. Set the rate meter output scale to 500 CPS.

7. Set the rate meter time constant at 1 second for logging at 10 feet per minute or at 2 seconds for logging at 5 feet per minute. At no time should the data acquisition interval exceed 2 inches.

NOTE: The data acquisition interval is approximated by multiplying the logging speed by the time constant.

8. Log the borehole at the appropriate logging speed.

9. Write depth values on the log every 20 feet and record all of the logging information on the log header.

10. Upon reaching the top of the borehole, the chart-recorded depth indication must be checked against the borehole datum. Record the difference between these two depth measurements on the log and label as "depth error."

11. For system check, rerun a 30-foot section, or if the well has been logged before using this procedure, overlap a 30-foot section of that log. Label the rerun section on the log.

4.2.4 Reruns (as necessary)

Any zones along the borehole where the first log run produces an area where the chart record output was saturated must be rerun. These reruns should be recorded separately on the chart above the first run. The rerun zones shall completely include the previously saturated zones as well as 20 feet above and below the saturated zones when possible.

1. Lower probe to proper depth.

2. Set the rate meter output scale to the next higher scale.

3. Align the chart recorder and engage the gear drive.

4. Log the hole at a time constant and logging speed prescribed in Section 4.2.3.

5. If the instrument is still saturated, continue runs with the rate meter output set at each higher scale until a nonsaturated record is obtained or a peak of 14,500 CPS is reached. Rerun scales must be consecutive.

All reruns must use the same data acquisition interval (about 2 inches) as in the original run, unless compelling evidence exists to suggest changing this. Such evidence must be shown as a chart paper response and be included on the log. A note should be provided in the "notes" section.

The depth must be indexed to the borehole as in the original run (Section 4.2.3). A depth-error indication must be provided on the log at completion of all of the reruns.

All rerun chart scale information, chart speeds, time constants, and rerun depth increments must be recorded on page 2 of the log header at the time the rerun is made. Rerun recordings must also be labeled as "rerun 1, rerun 2, ... " on the chart record.

4.2.5 Checking Calibration (post-survey calibration)

The post-survey calibration is precisely the same as the pre-survey calibration. The reader is referred to Section 4.2.2 of this procedure for a detailed description.

1. Perform a post-survey calibration as prescribed in Section 4.2.2.

2. Convert the post-survey calibration data to equivalent uranium units and compare to the pre-survey calibration data. If the difference is greater than 8%, the instrumentation is suspect and the logging should be redone.

4.2.6 Logging-Records Disposition

The final task for logging the borehole is to check the log header to make certain that all of the log header information is filled out and correct and that all charts from the chart recorder are correctly and appropriately labeled.

1. Attach the log header to the log.

2. If everything is correct and any abnormalities are recorded in the comment sections of the log header, the logging witness signs the log header signifying Westinghouse Hanford Company's acceptance of the log.

3. The log is given to the Westinghouse Hanford Company logging witness, who handles it according to Westinghouse Hanford Company protocols.

The logging witness must make arrangements to have the depth datum surveyed and obtain the survey information for later inclusion on the log header.

5.0 REFERENCES

- ANSI. 1980. American National Standard Calibration and Usage of Sodium Iodide Detector Systems. ANSI N4212-1980, American National Standards Institute, New York.

- API. 1974. Recommended Practice for Standard Calibration and Format for Nuclear Logs. RP 33, Third Edition, American Petroleum Institute, Dallas, Texas.

- Brodeur, J. R., and Koizumi. 1989. Base Calibration of Pacific Northwest Laboratory's Gross Gamma Borehole Geophysical Logging System. WHC-EP-0246, Westinghouse Hanford Company, Richland, Washington.

- IAEA. 1982. Borehole Logging for Uranium Exploration. IAEA Technical Reports Series, No. 212, International Atomic Energy Agency, Vienna, Austria.

ATTACHMENT 1

EXAMPLE OF PAGE ONE OF THE LOG HEADER

WESTINGHOUSE HANFORD COMPANY

WELL NUMBER _____ AREA _____

DATE _____

LOG RUN _____ LOG TYPE _____

SURVEY COORDINATES _____ N _____ E

ELEVATION DATUM _____ ELEVATION _____

LOG MEASURED FROM _____

LOCATION DESCRIPTION _____

GROUND SURFACE ELEVATION _____

SURFACE TEMPERATURE _____ WEATHER _____

BOREHOLE INFORMATION

DRILLER	
DRILL RIG TYPE	BIT TYPE/DIAMETER
BOREHOLE DIAMETER(S)/DEPTH	
DEPTH DRILLER	DEPTH LOGGER
LIQUID LEVEL	LIQUID APPEARANCE
TEMPERATURE	

CASING RECORD

TYPE	INTERVAL
TYPE	INTERVAL
TYPE	INTERVAL
TYPE	INTERVAL
WELL SCREEN INTERVAL:	
COMMENTS:	

ATTACHMENT 1 (contd)

EXAMPLE OF PAGE TWO OF THE LOG HEADER

EQUIPMENT DATA

LOGGING COMPANY

OPERATOR(S)

EQUIPMENT BRAND | EQUIPMENT TYPE

TOOL TYPE | BASE CALIBRATION DATE

SERIAL NO. | CALIBRATION REFERENCE

CALIBRATION / PROBE FACTOR

DEAD TIME | WARM UP TIME

LOGGING INFORMATION

LOG INTERVAL FROM TO

RERUN(S)

PRE SURVEY CALIBRATION: POSITION 1 | POSITION 2 | BACKGROUND

LOGGING SPEED

START TIME | COMPLETION TIME

CHART SPEED(S), FT/IN.

CHART RECORDER HORIZONTAL SCALE, CPS/IN.

RERUN SCALES, CPS/IN.

TIME CONSTANT(S)

POST SURVEY CALIBRATION: POSITION 1 | POSITION 2 | BACKGROUND

PERCENT CHANGE: POSITION 1 | POSITION 2

COMMENTS:

WITNESSED AND VERIFIED BY:

GL-8 SPONTANEOUS POTENTIAL-RESISTANCE PROBE PROCEDURE

1.0 APPLICABILITY

This procedure describes borehole spontaneous potential-resistivity logging. Spontaneous potential (SP) logs are records of the natural potentials developed between the borehole fluid and the surrounding rock materials and is measured in millivolts. The SP is chiefly used for geologic correlations, determination of bed thickness, and separating porous from nonporous rocks. Resistivity logging devices measure the electrical resistivity of a volume of earth under the direct application of an induced electric current. Resistivity devices are generally used to determine the formation resistivity, formation porosity, mud cake resistivity, invaded zone resistivity and porosity, hydrocarbon and water saturation, fluid resistivity, and formation factor. SP&R logs may be made in uncased, liquid-filled holes only. Maximum logging speed is 100 feet per minute. Safety precautions during logging are discussed in Procedure GL-1.

2.0 DEFINITIONS

- NBP - NIMS Bin Panel
- NIMS - nuclear instrument modules specifications
- SRP - solid state recorder panel
- ELM - electric log module
- SP&R - spontaneous potential-resistivity.

3.0 RESPONSIBLE STAFF

- Authorized Technical Staff.

4.0 PROCEDURE

4.1 Prerequisites

4.1.1 Equipment

- logging truck with cable and reel
- AC power source
- NIMS Bin Panel
- chart recorder
- electric log module
- converter module
- resistance SP test box
- ground line
- spontaneous potential-resistivity probe
- well sheave.

4.1.2 Precautions

WARNING: Be sure to turn off all power before handling the probe. If this is not done, the operator may receive an electrical shock. Before

starting to operate this module, make sure that all other systems are off. If this is not observed, the equipment may be damaged.

4.1.3 Qualification for Authorization

Technical staff will be considered authorized to operate the geophysical well logging equipment in accordance with procedures GL-1 through GL-15 if:

(a) they have completed a documented Training Assignment requiring the technical staff to read the applicable procedures before going into the field

(b) they have completed a documented Training Assignment of on-the-job training in the use of the geophysical logging equipment under the supervision of an authorized technical staff member. The authorized technical staff member will decide when a staff member in training is qualified to operate the equipment, or

(c) the cognizant line manager waives the documented training requirements in (a) and (b) above and authorizes the technical staff based on previous experience. Such a waver must be documented by memo or similar means and state the basis for the waiver.

4.2 Step-by-Step Instructions

Position Responsible: AUTHORIZED TECHNICAL STAFF

4.2.1 Setting Up and Calibrating for Resistance Logging Using the Test Box

1. Remove the 300-volt power supply cable from the NBP and connect to the CONVERTER MODULE.

2. Remove the line connection from the NBP.

3. Connect the TEST BOX to the cable head and the NBP line connection.

4. Switch on the power to the NBP.

5. Switch on power to the SRP.

6. Switch ELM LINES switch to ON.

7. Rotate ELM FUNCTION switch to E-LOG position.

8. Set the X1-X10 switch on the ELM in X1 position.

9. Rotate RES. SCALE switch on ELM to "0" position.

10. Place CAL-LOG switch on ELM in the LOG position.

9011774056 2

11. Place 100 CAL-TEST switch on Test Box in 100 CAL position.

12. Place WITHOUT CABLE-WITH CABLE switch on Test Box in the WITH CABLE position.

13. Switch on amplifier 1 and 3 on the SRP. Channel 1 is used for the 64-inch normal and channel 3 is used for the 16-inch normal.

14. Using recorder ZERO controls, base the 16-inch and 64-inch normal pens of the SRP on the left margin of the 20-division chart paper track.

15. Switch the RES. SCALE switch on the ELM to 100. The pens should deflect 10 divisions on the chart paper. If the pen deflections are not 10 divisions, adjust the recorder SPAN controls.

16. Repeat steps 8, 13, and 14 until the probe is properly calibrated, and record "0" and span on the chart.

17. Place Test Box 100 CAL-TEST switch in the TEST position.

18. Rotate Test Box MAX TEST control and observe pens. The 64-inch normal pen (#1) deflection should be four times greater than the 16-inch normal pen (#3) deflection.

4.2.2 Calibrating the Spontaneous Potential

1. Switch recorder amplifier #2 on the SRP to ON.

2. Rotate the S.P. SELECTOR switch on the ELM to the 100 position.

3. Set the Test Box switch 100 CAL-TEST to the TEST position.

4. Using the recorder ZERO control, base the S.P. pen on the right margin of the 10-division chart paper track.

5. Turn on the Test Box S.P. switch and adjust the MAX TEST control for 10 divisions of pen deflection to the left. If the S.P. pen does not deflect 10 divisions, adjust the recorder span control.

6. With the Test Box S.P. switch actuated, consecutive positions of 50, 150, and 200 on the module S.P. SELECTOR switch should deflect the pen twice, 2/3, and 1/2 the distance of the 10 divisions, respectively. Record this on the chart.

7. This completes the calibration procedure. Place all power switches in the OFF position.

8. Disconnect the Test Box and replace cables removed to connect the Test Box.

9. Ensure that the ground circuit is complete to the MUD PIT ground jack on the front of the ELM module. Failure to have a good mud pit ground will result in excessive noise, poor log quality, or no log at all.

4.2.3 Running the Log

1. Connect the probe to the cable head and set to proper measuring point in the well. The 64-inch normal is 5.8 feet from the top of the cable head spring.

2. Lower probe below the surface casing.

3. Switch on main power to the NBP, SRP, and the ELM.

4. Observe the pens while lowering the probe over interval to be logged and select the logging scale. If pens go off scale, switch X1-X10 switch to X10 position.

5. Record the zero setting on resistance pens at the bottom of the hole.

6. Set the S.P. pen two chart divisions to the left of the right hand side of the 10-division chart.

7. Place the SRP transmission lever in the UP position.

8. Run the log. A good logging speed is 25 feet per minute.

9. Record a 30-foot repeat section, or if the well has been logged before, overlap a 30-foot section of the previous log.

10. After log is completed, switch ELM RES. SCALE to "0" to check for drift. Record this on the chart.

11. Make sure power is OFF to the probe before removing it from the well.

12. Review the log for errors and fill in the log heading as discussed in Procedure GL-1.

4.2.4 Setting Up and Calibrating the Resistance Probe Without the Test Box

1. Make sure mud pit ground is making a good connection.

2. Connect the probe to the cable head, set to proper measuring point, then lower into fluid past the surface casing.

3. Use steps 5 through 8 in Subsection 4.2.1.

9 0 1 1 7 7 4 0 5 6 4

4. Place the CAL-LOG switch on the ELM in the CAL position.

5. Use steps 12 through 15 in Subsection 4.2.1.

4.2.5 Setting Up and Calibrating the Spontaneous Potential Probe Without the Test Box

1. Follow steps 1, 2, and 4 in Subsection 4.2.2.

2. Hold the S.P. TEST-LOG switch in the S.P. TEST position. The pen should deflect 10 divisions to the left, and the NORMAL CURRENT meter should read 10 MA of current.

3. If the S.P. pen does not deflect 10 divisions, adjust the recorder span control. The S.P. internal calibration signal is equal to the position of the S.P. selector (if the S.P. selector is on 50, the signal is equal to 50 MV). Therefore, on internal calibration, the recorder pen should deflect 10 divisions on any position of the S.P. selector.

4. This completes the internal calibration procedure. Change the CAL-LOG switch on the ELM to LOG.

5. Follow steps 4 through 12 in Subsection 4.2.3 for running the log.

THIS PAGE INTENTIONALLY
LEFT BLANK

9 0 1 1 7 7 4 0 5 6 6

GL-9 FLUID RESISTIVITY PROBE PROCEDURE

1.0 APPLICABILITY

This procedure describes borehole fluid-resistivity logging. Fluid-resistivity logs provide a measurement of the resistivity of the in-hole fluid between electrodes in the probe. It is sometimes used to determine the zone of water entry into a well. Safety precautions during logging are discussed in Procedure GL-1.

2.0 DEFINITIONS

- NBP - NIMS Bin Panel
- NIMS - nuclear instrument modules specifications
- SRP - solid state recorder panel
- ELM - electric log module.

3.0 RESPONSIBLE STAFF

- Authorized Technical Staff.

4.0 PROCEDURE

4.1 Prerequisites

4.1.1 Equipment

- logging truck with cable and reel
- AC power source
- NIMS Bin Panel
- chart recorder
- electric log module
- converter module
- ground line
- fluid-resistivity probe
- well sheave.

4.1.2 Qualification for Authorization

Technical staff will be considered authorized to operate the geophysical well logging equipment in accordance with procedures GL-1 through GL-15 if:

(a) they have completed a documented Training Assignment requiring the technical staff to read the applicable procedures before going into the field

(b) they have completed a documented Training Assignment of on-the-job training in the use of the geophysical logging equipment under the supervision of an authorized technical staff member. The authorized technical staff member will decide when a staff member in training is qualified to operate the equipment, or

9017740567

(c) the cognizant line manager waives the documented training requirements in (a) and (b) above and authorizes the technical staff based on previous experience. Such a waver must be documented by memo or similar means and state the basis for the waiver.

4.2 Step-by-Step Instructions

Position Responsible: AUTHORIZED TECHNICAL STAFF

NOTE: Sonic logs should always be run with centralized tools where hole size permits. This is to ensure a near-constant travel time through the borehole and symmetrical response from all quadrants with no destructive interference of sound reaching the receiver because of unequal radial travel time paths between the tool and the borehole wall.

4.2.1 Setting Up the Equipment

1. Connect the probe to the cable head.
2. Put MUD PIT ground line out.
3. Position the probe electrode at a reference point.
4. Lower the probe until it is completely submerged in the borehole fluid.
5. Switch on the main power to the NBP.
6. Rotate the ELM FUNCTION switch to the FLUID RES. position.
7. Place the ELM module X1-X10 switch in the X1 position.
8. Switch on channel three of the SRP recorder. Channel three is selected for standardization and reference purposes.
9. Plug channel three into the output jack on the back of the ELM labeled FLUID RES.

4.2.2 Calibrating the Equipment

1. Place the ELM ON-OFF switch in the ON position.
2. Place the ELM CAL-LOG switch in the CAL position.
3. Switch SRP main power switch to ON.
4. Rotate the RES. SCALES switch on the ELM to the "0" position.

5. Rotate the RES. SCALES switch on the ELM to position 10. The pen should deflect 10 divisions to the right. The Fluid Resistivity internal calibration signal is equal to 10 ohms m^2/m. This signal is constant even if different resistivity scales are used. If the pen does not deflect 10 divisions, it will be necessary to adjust the deflection using the recorder SPAN control.

6. Rotate the RES. SCALES switch on the ELM from position 10 to 20 and observe the pen deflection, then rotate the switch back to position 10. The pen should have deflected 1/2 (5 divisions) of the 10 divisions. Repeat steps 3 through 6 until the proper span is adjusted. Record this on the chart.

4.2.3 Running the Log

1. Rotate the CAL-LOG switch on the ELM to the LOG position.

2. Begin logging by lowering the probe into the hole at 25 feet per minute. This log is always made going into the borehole.
3. Run a 30-foot repeat section.

4. After the log has been run, rotate the CAL-LOG switch on the ELM to the CAL position and repeat steps 4 through 6 of the Subsection 4.2.2.

5. Rotate the ELM RES. SCALES switch to the "0" position and record this on the chart.

6. If the calibration check is off by 10%, the log should not be used.

7. Review the log for errors and fill in the heading as discussed in Procedure GL-1.

THIS PAGE INTENTIONALLY
LEFT BLANK

90177405570

GL-10 FLOWMETER PROBE PROCEDURE

1.0 APPLICABILITY

This procedure describes borehole flowmeter logging. Flowmeter logs are used to meter fluid flow rates within either cased or uncased wells. They help determine where fluid is entering or leaving the borehole, and locate lost circulation zones and holes in the casing. This probe is not calibrated and is used for indication only. Safety precautions during logging are discussed in Procedure GL-1.

2.0 DEFINITIONS

- NBP - NIMS Bin Panel
- NIMS - nuclear instrument modules
- SRP - solid state recorder panel
- RMM - rate meter module
- FMM - flowmeter module.

3.0 RESPONSIBLE STAFF

- Authorized Technical Staff.

4.0 PROCEDURES

4.1 Prerequisites

4.1.1 Equipment

- logging truck with cable and reel
- AC power source
- NIMS Bin Panel
- chart recorder
- rate meter module
- flowmeter module
- flowmeter probe
- well sheave
- 200-cc light-weight oil.

4.1.2 Qualification for Authorization

Technical staff will be considered authorized to operate the geophysical well logging equipment in accordance with procedures GL-1 through GL-15 if:

(a) they have completed a documented Training Assignment requiring the technical staff to read the applicable procedures before going into the field

(b) they have completed a documented Training Assignment of on-the-job training in the use of the geophysical logging equipment under the supervision of an authorized technical staff member. The authorized

technical staff member will decide when a staff member in training is qualified to operate the equipment, or

(c) the cognizant line manager waives the documented training requirements in (a) and (b) above and authorizes the technical staff based on previous experience. Such a waver must be documented by memo or similar means and state the basis for the waiver.

4.2 Step-by-Step Instructions

Position Responsible: AUTHORIZED TECHNICAL STAFF

NOTE: Sonic logs should always be run with centralized tools where hole size permits. This is to ensure a near-constant travel time through the borehole and symmetrical response from all quadrants with no destructive interference of sound reaching the receiver because of unequal radial travel time paths between the tool and the borehole wall.

4.2.1 Setting up the Equipment

1. Remove the top sub from the flowmeter probe. Fill the oil container with thin nonconductive oil.

2. Attach flowmeter probe to the cable head.

3. Place NBP and SRP main power switches in the ON position.

4. Set the RMM MODE switch to LINE.

5. Set the RMM CPS switch to 100 and TC switch to 1.

6. Set the RMM POSITIVE-NEGATIVE polarity switch to POSITIVE.

7. Set the RMM power ON-OFF switch to ON.

8. Select a recorder channel on the SRP and plug the input connector into the output jack in back of the RMM.

9. Using the selected recorder channel zero control, base the pen on the left margin of the chart paper by setting the RMM FUNCTION switch in the CAL 100 position and depressing the ZERO button.

10. Adjust the SRP SPAN control and set the pen on the right margin of the chart paper. Record these settings on the chart paper.

11. Check the flowmeter probe by rotating the rotor blades located on the bottom of the probe. The blades should move freely, and the recorder pen should move to the right.

12. Zero the point of measurement of the tool to the proper reference point. Tool zero is at the impeller blades.

9 0 1 1 7 7 4 0 5 7 2

4.2.2 Running the Log

1. The flowmeter may be run into or out of a well at a constant speed to obtain a continuous flow profile versus depth. It may also be stopped at various levels in the well to record the total volume of flow at any preselected level. When stopped in the well, the recorder time drive may be used to advance the chart paper.

2. If a flow is too great and the pen goes off scale, advance the CPS scale to the next range.

3. Record all scale changes, stops, logging speed, and logging direction on the chart.

4. Review the log for errors and fill in the heading as discussed in Procedure GL-1.

9011740573

THIS PAGE INTENTIONALLY
LEFT BLANK

9 0 1 7 7 4 0 5 7 4

GL-11 MAGNETIC PROBE PROCEDURE

1.0 APPLICABILITY

This procedure describes borehole magnetic logging. Magnetic surveys are used to locate magnetic reversals in basalt flows and areas of interbedding and to identify different flows. Logs are run in uncased holes only. Normal logging speed is 40 feet per minute. Safety precautions during logging are discussed in Procedure GL-1. This probe is not calibrated and is used for indication only.

2.0 DEFINITIONS

- NBP - NIMS Bin Panel
- NIMS - nuclear instrument modules specifications
- SRP - solid state recorder panel
- LPM - line power module.

3.0 RESPONSIBLE STAFF

- Authorized Technical Staff.

4.0 PROCEDURE

4.1 Prerequisites

4.1.1 Equipment

- logging truck with cable and reel
- AC power source
- NIMS Bin Panel
- chart recorder
- line power module
- magnetic probe
- well sheave.

4.1.2 Qualification for Authorization

Technical staff will be considered authorized to operate the geophysical well logging equipment in accordance with procedures GL-1 through GL-15 if:

(a) they have completed a documented Training Assignment requiring the technical staff to read the applicable procedures before going into the field

(b) they have completed a documented Training Assignment of on-the-job training in the use of the geophysical logging equipment under the supervision of an authorized technical staff member. The authorized technical staff member will decide when a staff member in training is qualified to operate the equipment, or

(c) the cognizant line manager waives the documented training requirements in (a) and (b) above and authorizes the technical staff based on previous experience. Such a waver must be documented by memo or similar means and state the basis for the waiver.

4.2 Step-by-Step Instructions

Position Responsible: AUTHORIZED TECHNICAL STAFF

NOTE: Sonic logs should always be run with centralized tools where hole size permits. This is to ensure a near-constant travel time through the borehole and symmetrical response from all quadrants with no destructive interference of sound reaching the receiver because of unequal radial travel time paths between the tool and the borehole wall.

1. Place switch on back of LPM in up position.

2. Plug the number one recorder amplifier input on the SRP into the number one output on the back of the LPM using the 22K ohm resistor.

3. Plug the number two recorder amplifier input on the SRP into the number two output on back of the LPM using the 5.6K ohm resistor and the 100 MFD capacitor.

4. Connect the probe to the cable head.

5. Set number one recorder amplifier ZERO control on the SRP to 487 and SPAN control to 192.

6. Set number two recorder amplifier ZERO control on the SRP to 551 and SPAN control to 052.

7. Set CURRENT on the LPM to 70 milliamperes.

8. Place probe in the well and set to the measuring point.

9. Set the transmission control on the SRP to run 10 inches of chart per 100 feet.

4.2.2 Running the Log

1. Lower the probe to the bottom of the hole. Place the SRP transmission lever in the UP position and log up. A good logging speed is 40 feet per minute.

2. Run a 30-foot repeat section over a portion of good activity.

3. Review the log for errors and fill in the heading as discussed in Procedure GL-1.

9011774057 6

4.2.3 Shutting Down the Equipment

1. Turn all switches to OFF.
2. Disconnect the recorder amplifiers from the back of the LPM.
3. Place switch on back of the LPM in the up position.
4. Change the transmission control on the SRP back to 5 inches of chart per 100 feet.

9011774057

THIS PAGE INTENTIONALLY
LEFT BLANK

9 0 1 1 7 7 4 0 5 7 6

GL-12 DOWNHOLE TELEVISION SYSTEM OPERATING PROCEDURE

1.0 APPLICABILITY

This procedure describes the operation of the Downhole Television System. Television surveys can help interpret the lithology of a borehole and inspect casing conditions for rust, broken welds, or method of perforation. They are also useful for looking at the position of lost tools before designing a fishing tool to retrieve them. Safety precautions during logging are discussed in Procedure GL-1.

2.0 DEFINITIONS

- VTR - video tape recorder.

3.0 RESPONSIBLE STAFF

- Authorized Technical Staff.

4.0 PROCEDURE

4.1 Prerequisites

4.1.1 Equipment

- logging truck with cable and reel
- AC power source
- camera and camera housing
- light source
- centralizers
- surface controls and monitor
- video recorder and video tape
- well sheave.

4.1.2 Qualification for Authorization

Technical staff will be considered authorized to operate the geophysical well logging equipment in accordance with procedures GL-1 through GL-15 if:

(a) they have completed a documented Training Assignment requiring the technical staff to read the applicable procedures before going into the field

(b) they have completed a documented Training Assignment of on-the-job training in the use of the geophysical logging equipment under the supervision of an authorized technical staff member. The authorized technical staff member will decide when a staff member in training is qualified to operate the equipment, or

(c) the cognizant line manager waives the documented training requirements in (a) and (b) above and authorizes the technical staff based on

previous experience. Such a waver must be documented by memo or similar means and state the basis for the waiver.

4.1.3 Safety Precautions

Television surveys can be hazardous, especially when the work is connected with a drilling rig. Hard hat, gloves, and safety shoes must be worn when working around drilling rigs. Special care should be taken to ensure the electrical power is off before assembling and disassembling the camera and light system. Failure to observe this safeguard may result in electrical shock.

Review Job Safety Analysis on Operation of Government Vehicles.

Review Job Safety Analysis on Operation of the Downhole Television System.

4.2 Step-by-Step Instructions

Position Responsible: AUTHORIZED TECHNICAL STAFF

NOTE: Sonic logs should always be run with centralized tools where hole size permits. This is to ensure a near-constant travel time through the borehole and symmetrical response from all quadrants with no destructive interference of sound reaching the receiver because of unequal radial travel time paths between the tool and the borehole wall.

4.2.1 Connecting Camera and Lighthead to Outer Housing

1. Inspect and lubricate the cable head "O" rings.

2. Slide the centralizer assembly over the cable head.

3. Attach the camera housing to the cable head by rotating the housing, not the cable head.

4. Adjust the f-stop on the camera. A good starting point for the majority of surveys would be a setting of f 5.6. Small diameter holes or bright reflective walls may require a setting that allows less light through the lens, such as f 11. Large holes and cloudy water may require more light at a setting of f 2.8 or smaller. The system is designed to vary the lamp brightness over a wide range to adapt to any f-stop setting, but ideally the setting selected would result in good lighting with the brightness control at midrange to allow adjustments in both directions.

5. Check the lighthead and make sure the viewing port is clean, the banana plugs are undamaged, and the "O" rings are clean and lubricated.

9 0 1 1 7 7 4 0 5 8 0

6. Insert the camera part way into the housing and affix the lighthead to the front of the camera by connecting the banana plugs to the respective plugs on the camera front face.

7. Push the camera and lighthead into the housing until the lighthead sits on the shoulder inside the housing. A gentle side-to-side movement may be required to set the lighthead assembly in place.

8. Assemble the four spring steel centralizer bands. Attach them to the front of the camera housing using the four lighthead screws.

9. Adjust the top end of the centralizers to the size hole to be surveyed and tighten the set screw against the cable head.

10. Ensure that all connections are properly made and test the camera and lighthead for operation.

4.2.2 Operating the System

NOTE: Review "Underground Surveys Corporation, Water Well and Borehole Survey System Operating Instructions." Review "Operating Instructions, Sony Videocassette Recorder Model VO-2610."

1. Turn on the video tape recorder (VTR) and insert a video tape cassette.

2. Turn on the camera control unit and the monitor.

3. Simultaneously press the VTR REC and PLAY buttons. This starts the VTR to record. Now press the PAUSE button to stop the tape. This saves tape while you adjust the monitor and control unit.

4. Set the camera at the zero measuring point in the well. Camera zero is at the lens. Press the FOOTAGE RESET button and zero the digital readout on the monitor screen. Reset the mechanical counter on the cable reel.

5. Lower the camera out of the surface light and adjust the camera lamp brightness, and the monitor contrast and brightness, until a good picture is obtained.

6. Plug the microphone into a MIC IN jack on the front of the VTR.

7. Press the PAUSE button, starting the tape.

8. Speak into the microphone with information such as the well name, date, diameter, or any other pertinent information about the well.

9. Proceed to lower the camera into the well. The right speed is determined by observing the monitor and adjusting the speed control valve to suit the observers.

9 0 1 1 7 7 4 0 5 8 1

10. Verify correct operation of the VTR before proceeding by recording the first 10 to 15 feet or so of the inspection run and playing the tape back.

11. Complete the log.

4.2.3 Shutting Down and Disassembling the Camera

1. Bring the camera to the surface.

2. Shut off all power to the television system.

3. Disassemble the centralizer bows from the lighthead and the lighthead from the camera housing.

4. Remove the camera and housing from the cable head. The camera should always be removed from the outer housing when stored. This will prevent the accumulation of moisture by condensation within the camera.

5. Wipe clean all disassembled parts and store in the logging van to avoid damage during transport.

5.0 REFERENCES

- "Operating Instructions, Sony Videocassette Recorder Model VO-2610."

- Underground Survey Corporation, "Water Well and Borehole Survey System Operating Instructions."

GL-13 X-Y CALIPER PROBE PROCEDURE

1.0 APPLICABILITY

This procedure describes borehole X-Y caliper logging. X-Y caliper logging is used to determine hole and casing diameter and locate caved zones, washouts, casing, and the absence of casing. The X-Y caliper probe with its four arms measures borehole dimensions in two axis simultaneously. One set of arms measures the "X" dimension while the opposing arms measure the "Y" dimension. The tool can measure borehole diameters from 4 to 30 inches. With the optional extension arms installed, the maximum measurement increases to 60 inches. The maximum logging speed is 60 feet per minute. Safety precautions during logging are discussed in Procedure GL-1.

2.0 DEFINITIONS

- NBP - NIMS Bin Panel
- NIMS - nuclear instrument modules specifications
- SRP - solid state recorder panel
- LPM - line power module
- RMM - rate meter module.

3.0 RESPONSIBLE STAFF

- Authorized Technical Staff.

4.0 PROCEDURE

4.1 Prerequisites

4.1.1 Equipment

- logging truck with cable and reel
- AC power source
- line power module
- two rate meters
- X-Y caliper calibrator
- chart recorder
- well sheave
- NIMS Bin Panel
- X-Y caliper probe.

4.1.2 Qualification for Authorization

Technical staff will be considered authorized to operate the geophysical well logging equipment in accordance with procedures GL-1 through GL-15 if:

(a) they have completed a documented Training Assignment requiring the technical staff to read the applicable procedures before going into the field

(b) they have completed a documented Training Assignment of on-the-job training in the use of the geophysical logging equipment under the supervision of an authorized technical staff member. The authorized technical staff member will decide when a staff member in training is qualified to operate the equipment, or

(c) the cognizant line manager waives the documented training requirements in (a) and (b) above and authorizes the technical staff based on previous experience. Such a waver must be documented by memo or similar means and state the basis for the waiver.

4.2 Step-by-Step Instructions

Position Responsible: AUTHORIZED TECHNICAL STAFF

NOTE: Sonic logs should always be run with centralized tools where hole size permits. This is to ensure a near-constant travel time through the borehole and symmetrical response from all quadrants with no destructive interference of sound reaching the receiver because of unequal radial travel time paths between the tool and the borehole wall.

4.2.1 Setting Up the Equipment

1. With all power switches in the OFF position, attach the tool to the cable head.

2. Place the LPM meter switch in the VOLTAGE position.

3. Open the caliper arms by placing the LPM NEG-OFF-POS switch to POS and adjusting the CURRENT control clockwise until the meter indicates 100 VDC. After the arms are fully extended, the motor limit switch opens. This shows a voltage kick on the meter.

4. Rotate the CURRENT control on the LPM fully counterclockwise.

5. Rotate the LPM POS-OFF-NEG switch to OFF, then back to POS.

6. Set the LPM meter mode switch to CURRENT and advance the CURRENT control until the meter reads 90 mA DC. Allow the equipment to warm up and stabilize, about 5 minutes.

7. Switch the toggle switches on the SRP amplifiers 1 and 2 to Hi Z.

8. Set the two rate meters as follows:

	X Axis RMM #1	Y Axis RMM #2
POS-NEG Switch	POSITIVE	NEGATIVE
NORMAL-REVERSE Switch	REVERSE	NORMAL
CPS Selector Switch	1000	1000
MODE Switch	LINE	LINE
TIME CONSTANT Switch	1.0	1.0
SUPPRESSION	1000	1000

9. Use SRP pen #1 for the X axis and pen #2 for the Y axis and plug them into their proper position in the back of the rate meters.

10. Place SRP pen #1 in the ON position.

11. Depress the ZERO button on RMM #1 while adjusting SRP pen #1 ZERO control and place the pen one chart division to the left of the center of track 2.

12. Rotate the SPAN control on SRP pen #1 to read 280.

13. Depress the ZERO button on RMM #2 while adjusting SRP pen #2 ZERO control and place the pen one chart division to the right of the center of track 2.

14. Rotate the SPAN control on SRP pen #2 to read 280.

4.2.2 Calibrating the Probe

1. Place calibrator on probe and set for 28-inch diameter.

2. Adjust SRP pen #1 to left edge of track 2 using #1 RMM RECORDER OUTPUT control.

3. Adjust SRP pen #2 to right edge of track 2 using #2 RMM RECORDER OUTPUT control.

4. Set arms in calibrator for 6-inch diameter.

5. Adjust SRP pen #1 to one chart division to the left of the center of track 2 using RMM #1 SUPPRESSION control.

6. Adjust SRP pen #2 to one chart division to the right of the center of track 2 using RMM #2 SUPPRESSION control.

7. Move the arms from the 6-inch to the 28-inch diameter settings in the calibrator while adjusting the RECORDER OUTPUT and SUPPRESSION controls. Repeat these steps until the pens track the calibrated diameter scale correctly. Any combination of spans can be made, such as 4 to 12 inches, or 8 to 20 inches.

4.2.3 Closing the Arms

1. Place the RMM power switches in the OFF position.

2. Turn the LPM CURRENT control fully counterclockwise.

3. Turn the LPM POS-OFF-NEG switch to NEG.

4. Turn the LPM meter switch to VOLTAGE.

5. Advance the LPM CURRENT control until the meter indicates 100V. After the arms are fully closed, the motor limit switch opens and the meter will show an upward kick.

6. Turn the CURRENT control fully counterclockwise and set the NEG-OFF-POS switch to OFF.

4.2.4 Running the Log

CAUTION: Never let the tool slide downward with the arms in the open position. It may bend the arms or damage the tool.

1. Place the probe in the well and set the odometer to the proper measuring point. Tool zero is at the tips of the tool arms.

2. Lower the probe to the bottom of the borehole and motor the arms open.

3. Set the LPM to the proper operating current of 90 mA.

4. Turn on both RMM and both recorder pens. Set SRP direction lever in the up position and log up. Maximum logging speed is 60 feet per minute.

5. Log into known casing size for at least 20 feet to check for instrument drift.

6. After the required survey has been run, stop the tool, close the arms, and lower the tool past a zone of good activity. Open the tool and run a 30-foot repeat section. Close the tool and come out of the hole.

7. Review the log for errors and fill in the heading as discussed in Procedure GL-1.

4.2.5 Maintaining the Probe

Read the X-Y Caliper Tool Operators Manual for maintenance and care of this probe.

9011774058

GL-14 X-Y CALIPER PROBE PROCEDURE WITH BOREHOLE VOLUME COMPUTER

1.0 APPLICABILITY

This procedure describes X-Y caliper with borehole volume computer logging. The X-Y caliper is an extremely versatile tool in that is provides two totally independent caliper curves simultaneously. This provides a unique look at an open hole (or casing) capable of showing irregularities in the hole, such as egg-shaped holes, large washouts, and restricted places not possible to find with a conventional two- or three-arm caliper. When the optional Borehole Volume Computer (BVC) is used in conjunction with the standard surface electronics, the X-Y caliper is capable of computing simultaneous borehole volume in units of 1-, 10-, or 100-cubic-foot increments. In addition, the BVC provides an average curve of the borehole diameter derived from the independent X-Y dimensions. The X-Y caliper can measure diameters from 4 to 28 inches. The maximum logging speed is 60-feet per minute. Safety precautions during logging are discussed in Procedure GL-1.

2.0 DEFINITIONS

- NBP - NIMS Bin Panel
- NIMS - nuclear instrument modules specifications
- SRP - solid state recorder panel
- LPM - line power module
- RMM - rate meter module
- BVC - borehole volume computer.

3.0 RESPONSIBLE STAFF

- Authorized Technical Staff.

4.0 PROCEDURE

4.1 Prerequisites

4.1.1 Equipment

- logging truck with cable and reel
- AC power source
- NIMS Bin Panel
- line power module
- two rate meters
- borehole volume computer module
- X-Y caliper calibrator
- chart recorder
- well sheave
- X-Y caliper probe.

4.1.2 Qualification for Authorization

Technical staff will be considered authorized to operate the geophysical well logging equipment in accordance with procedures GL-1 through GL-15 if:

(a) they have completed a documented Training Assignment requiring the technical staff to read the applicable procedures before going into the field

(b) they have completed a documented Training Assignment of on-the-job training in the use of the geophysical logging equipment under the supervision of an authorized technical staff member. The authorized technical staff member will decide when a staff member in training is qualified to operate the equipment, or

(c) the cognizant line manager waives the documented training requirements in (a) and (b) above and authorizes the technical staff based on previous experience. Such a waver must be documented by memo or similar means and state the basis for the waiver.

9 0 1 1 7 7 4 0 5 8 8

4.2 Step-by-Step Instructions

Position Responsible: AUTHORIZED TECHNICAL STAFF

NOTE: Sonic logs should always be run with centralized tools where hole size permits. This is to ensure a near-constant travel time through the borehole and symmetrical response from all quadrants with no destructive interference of sound reaching the receiver because of unequal radial travel time paths between the tool and the borehole wall.

4.2.1 Setting Up the Equipment

1. Use RMM #1 for the X axis and RMM #2 for the Y axis.

2. Connect a jumper cable from the Hi Z connector on the back of RMM #1 to the X input on the back of the BVC.

3. Do the same thing for RMM #2 and run it to the Y input on the back of the BVC.

4. Connect the Hi Z recorder output cable from amplifier #1 to the X output on the back of the BVC.

5. Connect the amplifier #2 Hi Z cable to the Y output on back of the BVC.

6. Connect the amplifier #3 cable to the X+Y/2 connector on the BVC.

7. Connect the amplifier #4 cable to the BVC volume marker. The event marker switch on back of the BVC causes the volume mark to be negative in the up position and positive in the down position.

8. Switch all recorder amplifier toggle switches located on the back of each amplifier to the Hi Z position.

9. With the equipment power switches in the off position, connect the probe to the cable head.

10. Place the LPM meter in the VOLTAGE position.

11. Open the arms by placing the LPM NEG-OFF-POS switch to POS and adjust the CURRENT control clockwise until the meter indicates 100 VDC. After the arms are fully extended, the meter limit switch opens, showing a voltage kick on the meter.

12. Rotate the CURRENT control on the LPM fully counterclockwise.

13. Rotate the LPM NEG-OFF-POS switch to OFF, then back to POS.

14. Set the LPM meter mode switch to CURRENT and advance the current control until the meter reads 90 mA DC. Allow the equipment to warm up and stabilize, about 5 minutes.

15. Set the two rate meters as follows:

	X Axis RMM #1	Y Axis RMM #2
POS-NEG switch	POSITIVE	NEGATIVE
NORMAL-REVERSE switch	NORMAL	NORMAL
CPS switch	500	500
MODE switch	LINE	LINE
TIME CONSTANT switch	.01	.01
SUPPRESSION	1000	1000

16. Select a span that will bracket the average expected diameter of the borehole. As an example; 4 to 16 inch will be used.

17. Switch the BVC power to ON and set both toggle switches to X. Place the NORM-REV switch to REV.

18. Observe that the count rate decreases when the diameter is decreased and increases when the diameter is increased. This indicates that the tool is working. If the rate meters do not respond as expected, correct the problem before proceeding.

4.2.2 Calibrating the Probe

1. Place calibrator on the probe and set for 4-inch diameter.

2. Turn the SUPPRESSION control on the X axis RMM counterclockwise until the display on the BVC reads 4.0.

3. Set both X-Y toggle switches on the BVC to X.

4. Turn the SUPPRESSION control on the Y axis rate meter counterclockwise until the display on the BVC reads 4.0.

5. Set arms in the 16-inch calibrator holes.

6. With both switches on the BVC in the Y position, turn the RECORDER OUTPUT control on the Y RMM counterclockwise until the display on the BVC reads 16.0 inch.

7. Set both X-Y toggle switches on the BVC to X.

8. Turn the RECORDER OUTPUT on the X axis RMM counterclockwise until the display on the BVC reads 16.0 inches.

9. Repeat steps 1 through 8 until no further adjustment is necessary.

10. On the BVC, turn X, X+Y and Y OUTPUTS fully clockwise.

11. Set the #1 and 2 SPAN controls on the SRP to 500.

12. Place the calibrator on the probe and set to 4.0 inches.

13. Set the X-Y toggle switches on the BVC to X.

14. With the #1 recorder ZERO control, move the X pen one chart division to the left of the center of track 2.

15. Set both X-Y toggle switches in the Y position.

16. With the #2 recorder ZERO control, move the Y pen one chart division to the right of the center of track 2.

17. Set one of the X-Y switches in the X position and the other in the Y position. The digital display should still read 4.0.

18. With the #3 recorder ZERO control, move the X+Y/2 pen one chart division to the right on track 1.

19. Set the arms in the 16-inch holes in the calibrator. The digital display on the BVC should read 16.0.

20. With the X+Y/2 OUTPUT on the BVC, adjust pen #3 to seven chart divisions to the right on track 1.

21. Switch both X-Y switches on the BVC to X.

9 0 1 1 7 7 4 0 5 9 0

22. Turn the X OUTPUT on the BVC and adjust pen #1 to seven chart divisions to the left of the center of track 2.

23. Switch both X-Y switches to Y on the BVC.

24. Turn the Y OUTPUT on the BVC and adjust pen #2 to seven chart divisions to the right of the center of track 2.

25. Repeat steps 12 through 24 until no further adjustment is necessary. This calibration makes each chart division equal to 2-inches.

26. The volume mark is run on pen #4 and is set on the right edge of track 1 using the #4 ZERO CONTROL. These marks are either positive or negative, depending on the event marker located on the back of the BVC. A scale selector located on the front of the BVC gives borehole volume in units of 1-, 10-, or 100-cubic-foot increments.

4.2.3 Closing the Arms

1. Shut off power to all modules.

2. Set the LPM CURRENT ADJUST to 0.

3. Switch the POS-OFF-NEG switch to NEG.

4. Change the meter switch to VOLTAGE.

5. Advance the CURRENT control until the meter indicates 100V. After the arms are fully closed, the limit switch on the motor opens and the meter will show an upward kick.

6. Turn the CURRENT control to 0 and set the POS-OFF-NEG switch to OFF.

4.2.4 Running the Log

1. With the probe in the well and the arms closed, set the SRP odometer to the depth reference and lower the tool into the hole.

2. When the bottom of the logging interval is reached, stop the tool and motor the arms open. Never let the tool slide downward in the hole with the arms open. It may bend the arms or damage the tool.

3. Apply the proper current and make sure all modules are ON.

4. Reset the volume marker circuit by placing the VOL-RESET switch on the front of the BVC to RESET and back to VOL.

5. Mark all calibration scales on the chart.

6. Set the SRP chart direction lever in the UP position and log at 60 feet per minute. The BVC was designed for this specific tool speed. Any other speed will give inaccurate results.

7. Note the size of the volume marker pulse and set the amplitude, if required, to one chart division, using the MARKER LEVEL control on the front of the BVC.

8. After the survey, run a repeat section over a zone of good activity. Run an interval of at least 30 feet.

9. Log into known size casing where possible for 100 feet to check the borehole volume. If volume is off by 10%, recalibrate.

10. Close the tool and come out of the hole.

11. Review the log for errors. Fill in the heading as discussed in GL-1.

4.2.5 Maintaining the Probe

Read the X-Y Caliper Tool Operators Manual for maintenance and care of this probe.

9011774059 2

GL-15 FLUID SAMPLER PROCEDURE

1.0 APPLICABILITY

This procedure describes the operation of the Fluid Sampler probe. The Fluid Sampler probe is designed to take samples from various depths below the water surface. It will withstand pressure to 4,000 psi. Additional safety precautions during logging are discussed in Procedure GL-1.

2.0 DEFINITIONS

- NBP - NIMS Bin Panel
- NIMS - nuclear instrument modules specifications
- LPM - line power module.

3.0 RESPONSIBLE STAFF

- Authorized Technical Staff.

4.0 PROCEDURE

4.1 Prerequisites

4.1.1 Equipment

- logging truck with cable and reel
- AC power source
- NIMS Bin Panel
- line power module
- fluid sampler probe
- sample containers.

4.1.2 Qualification for Authorization

Technical staff will be considered authorized to operate the geophysical well logging equipment in accordance with procedures GL-1 through GL-15 if

(a) they have completed a documented Training Assignment requiring the technical staff to read the applicable procedures before going into the field

(b) they have completed a documented Training Assignment of on-the-job training in the use of the geophysical logging equipment under the supervision of an authorized technical staff member. The authorized technical staff member will decide when a staff member in training is qualified to operate the equipment, or

(c) the cognizant line manager waives the documented training requirements in (a) and (b) above and authorizes the technical staff based on previous experience. Such a waver must be documented by memo or similar means and state the basis for the waiver.

4.2 Step-by-Step Instructions

Position Responsible: AUTHORIZED TECHNICAL STAFF

NOTE: Sonic logs should always be run with centralized tools where hole size permits. This is to ensure a near-constant travel time through the borehole and symmetrical response from all quadrants with no destructive interference of sound reaching the receiver because of unequal radial travel time paths between the tool and the borehole wall.

CAUTION: Do not exceed 80 milliamperes or 40 volts to the tool. The motor will burn out if this is exceeded.

4.2.1 Equipment Setup and Sampling Procedure

1. Attach fluid sampler to cable head and hang in the well.
2. Set the depth odometer at the proper depth. The tool zero is 3.4 feet from the top of the cable head spring.
3. Lower the tool to the desired depth that the sample is to be taken.
4. Turn on the NBP.
5. Set the LPM CURRENT-VOLTAGE switch to CURRENT.
6. Set the LPM HIGH-LOW switch to HIGH.
7. Set the LPM NEG-OFF-POS switch to POS.
8. Set the LPM CURRENT ADJUST to 80 milliamps. This step will open the valve for sample collection.
9. Set the LPM CURRENT-VOLTAGE switch to VOLTAGE. The meter should read about 40 volts. When the valve is fully open, the voltage will drop.
10. Switch the LPM NEG-OFF-POS switch to OFF.
11. Allow enough time to fill the sample barrel with fluid. If sampling in mud, allow a little longer time, maybe 5 minutes, to fill.
12. Set the LPM CURRENT-VOLTAGE switch to CURRENT.
13. Set the LPM NEG-OFF-POS switch to NEG.
14. Adjust the LPM CURRENT ADJUST to obtain 80 milliamps; this will close the sample barrel valve.

4650471106

15. Set the LPM CURRENT-VOLTAGE switch to VOLTAGE. The meter should read about 40 volts. When the valve is fully closed, the voltage will drop.

16. Switch the LPM NEG-OFF-POS switch to OFF.

17. Raise the tool from the well.

18. Slightly open the barrel valve, then close the valve. If a high pressure is present in the sampler, fluid should spray out. This will relieve any excessive pressure.

19. Remove the bottom plug on the sample barrel and collect the sample into the container(s) provided by the PNL well-site geologist/hydrologist. The geologist/hydrologist is responsible for marking the containers and chain-of-custody of the samples.

20. Wash the barrel out two times with distilled water and replace the plug. The tool is ready for the next sample.

9 0 1 1 7 4 0 5 9 5

THIS PAGE INTENTIONALLY
LEFT BLANK

9 0 1 1 7 7 4 0 5 9 6

SA-1 SEDIMENT SAMPLE ANALYSIS/SAMPLE CONTROL PROCEDURE

1.0 APPLICABILITY

This procedure applies to the notification of analytical laboratories of upcoming sediment analysis requirements and the transport, storage, and logging of samples by the laboratory.

The primary purpose of this procedure is to communicate the analyses required early on so that by the end of the project all requested analyses will have been completed. Sample control procedures are established so that the laboratory personnel knows what samples have been delivered for analyses and where these samples are located.

2.0 DEFINITIONS

- RPT - Radiation Protection Technician.

3.0 RESPONSIBLE STAFF

- Technical Staff transporting samples to the laboratory
- Laboratory Staff.

4.0 PROCEDURE

4.1 Prerequisites

4.1.1 Equipment

- laboratory notebook, PNL numbered (LRB)
- storage facility.

4.2 Step-by-Step Instructions

Position Responsible: TECHNICAL STAFF AND LABORATORY STAFF

1. Before sampling/delivery of samples to the laboratory, the Technical Staff delivers written communique from the task leader to the person in charge in the laboratory detailing the analyses required for the field samples. Included in this communique is a list of the samples and location to be sampled and any specific analysis requirements for each.

2. Before the samples are brought in from the field, the Technical Staff has the RPTs determine if there is a possibility of radioactive or hazardous contamination.

3. If there is the possibility of contamination, the Technical Staff notifies the proper authorities (i.e., RPTs to survey samples when the containers are opened for analysis).

9011774059 7

4. As the samples are brought in from the field, the Technical Staff has the field geologist store them in the proper facility - storage shed or refrigerator, and has the geologist notify the laboratory personnel, verbally or in writing, that the samples have arrived and their location.

5. As the samples are brought into the laboratory for analysis, the Laboratory Staff logs each into an LRB by well number and depth.

6. The Laboratory Staff then performs the required analyses in accordance with procedures SA-2 through SA-8 per the previously received communique.

9 0 1 1 7 7 4 0 5 9 8

SA-2 SIEVE PROCEDURE

1.0 APPLICABILITY

This procedure applies to sieve analysis of samples to determine the relative proportions of various grain size fractions found in the sediments underlying Hanford. The samples to be analyzed are collected at various depths during the drilling of monitoring wells.

The dried sample is shaken through a nest of sieves, going from the coarsest at the top to the finest on the bottom, and the fraction retained by each sieve is weighed.

The procedure is divided into two methods. Dry sieving is done on coarse samples, and wet sieving followed by dry sieving is done on fine-textured samples.

2.0 DEFINITIONS

N/A

3.0 RESPONSIBLE STAFF

- Laboratory Staff.

4.0 PROCEDURE

4.1 Prerequisites

4.1.1 Equipment

- sieves - brass, 8-inch diameter to meet ASTM-E11 specifications

Wentworth Scale		Fine Soil Sieves	
Sieve No., U.S. Standard	Retained Particle Diameter, mm	Sieve No., U.S. Standard	Retained Particle Diameter, mm
5	> 4.0	10	> 2.00
10	2.0	18	1.00
18	1.0	35	0.50
35	0.5	60	0.25
60	0.25	140	0.106
120	0.125	200	0.075
230	0.063	270	0.053
325	0.045		

- calibrated balance(s) (0.01-g precision)
- pan

- Rotap shaker with circular and tapping motion, equipped with a 20-minute timer
- wire brush for use on #60 sieves and coarser
- paint brushes for use on sieves finer than #60
- Soil Test standard sample splitter
- ultrasonic, 8-inch-diameter by 4-inch-deep sieve cleaner
- drying trays
- mortar and rubber-tipped pestal
- drying oven - adjusted to 105 ± 2°C.

4.2 Step-by-Step Instructions

4.2.1 Preparing Samples

Position Responsible: LABORATORY STAFF

1. Log samples in by well number and depth (if not done previously).
2. Place sample in appropriately labeled pan and place in oven at 105°C for 12 hours or overnight.
3. Remove sample from oven and carefully break up aggregates with mortar and rubber-tipped pestal.
4. Return sample to original sample jar.

4.2.2 Analyzing the Sample by the Dry Sieve Method

Position Responsible: LABORATORY STAFF

1. If the sample weighs more than about 1000 g, pour through sample splitter. If there are large pieces that will not pass through the splitter, place them in the pan into which they would have fallen.
2. Select one of the two pans and weigh the sample and record the weight to the nearest 0.01 g. Return the unused portion of the sample to the original sample jar. Record serial number and calibration expiration date of balance used.

3. Inspect a set of sieves (Wentworth scale set) for cleanliness. (See subsection 4.1.1, "Equipment," for mesh sizes). If the mesh is clogged, clean it with a wire or paint brush. An ultrasonic cleaner can be used if this method fails.

4. Weigh each clean sieve separately and record the weights.

5. Pour the dried sample into the top of the nest of clean sieves.

6. Shake on the Rotap shaker for 20 minutes.

7. Check the sediments in each sieve for aggregates. If present, grind them with the mortar and pestal and return to the same sieve and again shake for 20 minutes. Grind only enough to break up the aggregates. Prolonged grinding will break down the primary particles.

8. Weigh each sieve with the retained soil and record each sieve separately. The sum of all the weights should be within 2% of the original sample weight. If the error is greater than 2%, the analysis must be repeated.

9. If the sample is to be analyzed for $CaCO_3$, go to step 10. If not, return the sample to the original jar, and stop procedure.

10. Pour all soil fractions that passed through sieve 18 into a plastic jar or bag, label the jar with the sample number, and save it for $CaCO_3$ analysis. Return the rest to the original jar.

11. Calculate the amount of soil retained on each sieve and also the percent passing each sieve.

4.2.3 Analyzing the Sample by the Wet Sieve Method

Position Responsible: LABORATORY STAFF

1. Follow the dry sieve method through step 4.

2. Pour the dried sample into a clean #270 sieve. Wash the sample thoroughly by passing a stream of water through the sample on the sieve. Continue to do this until the water passing through the sample is clear.

3. Dry the sample on the sieve in the oven for at least 3 hours or until the sample is dry - longer for large samples.

4. When the sample is dry, remove it from the oven and transfer the sample completely to the top sieve of the fine-soil sieve nest.

5. Continue with step 8 of the dry sieve method.

5.0 REFERENCES

- Gee, G. W., and J. W. Bauder. 1986. "Particle-Size Analysis." In Methods of Soil Analysis, Part 1, ed. A. Klute, pp. 383-409. American Society of Agronomy, Madison, Wisconsin.

- Uebelacker, D. L. 1980. "Granulometric Analysis of Desegregated Sediment Samples." Analytical Procedure LA-519-131, Rockwell Hanford Operations, Richland, Washington.

9011774062

AT-1 SETTING AND INSTRUMENTING THE TEST PUMP

1.0 APPLICABILITY

This procedure applies to the setting of test pumps in wells for the purpose of hydrologic testing.

2.0 DEFINITIONS

- Data Logger - a field computer that operates a transducer and records the measurements
- Discharge pipe - the pipe that carries water away from the well to the point of disposal
- Pump - the mechanism used to lift water from the well
- Pump inlet - the location on the pump that water enters. May be at bottom or along the side of the pump.
- Pump motor - the unit used to drive the pump. May be combined with pump as an electric submersible unit or an internal combustion engine mounted above the well with a drive shaft to the pump.
- Stilling pipe or stilling well - a length of steel or poly pipe either attached to the riser pipe or inserted into the well. Water level measurements are made inside the stilling pipe to reduce the effects of water turbulence.
- Transducer - an electro-mechanical device for measuring water pressure
- Riser pipe - the pipe connected to the pump that conducts water to the top of the well
- Well head - the top of the well casing where the riser pipe and the discharge pipe are connected. May also include an adjacent flow control valve and water sample outlet.

3.0 RESPONSIBLE STAFF

- Project Manager
- Project Hydrologist
- Well-Site Geologist.

4.0 PROCEDURE

4.1 Prerequisites

4.1.1 Equipment

Pumping equipment is placed in monitoring wells to complete well development and perform aquifer (hydrologic) testing. Installation of water level measurement devices at the time of pump setting can, in many instances, result in considerable cost savings for the project. Therefore, this procedure addresses the steps needed to set a pump in a monitoring well and install temporary water level measurement devices necessary for determining the effects of pumping.

The equipment needed includes:

- pump and drive motor (an electric generator or other power source must be provided if pump uses an electric motor)
- riser pipe from pump to well head
- stilling pipe
- Aquifer Test Well Information sheet.

The selection and sizing of pumping equipment is normally made following discussions among the well driller, the project hydrologist, the well-site geologist, and consulting the Aquifer Test Plan (if one exists). Because the hydraulic properties at a newly drilled well have not yet been determined, estimation of the well yield is subject to uncertainty.

The following monitoring equipment is needed to perform pump setting:

- water level measuring devices (e.g., steel or electric tapes with a pressure transducer and data logger).

Graduated steel tapes, electric tapes, and pressure transducers are commonly used to measure water levels. A measurement device should be dedicated to each well for the test period. The measurement equipment must be in good condition, and instrument function (i.e., electric tapes and transducers) should be confirmed before use in the field. Electric and steel tapes should be full length. Instrument precision should be sufficient to resolve drawdown to better than ±0.04 ft.

Steel tapes that are used shall have been standardized according to Procedure WL-2. Electrical tapes that are used shall have a precision of ±0.04 ft. Pressure transducers that are intended to be used for aquifer tests shall have been calibrated. Documentation of standardization and calibration shall be available.

When steel and electric tapes are used in a pumping well, a stilling pipe is needed to reduce the effects of pump turbulence and/or water cascading down the well from the upper portions of the screened interval. A stilling pipe commonly consists of a small diameter (3/4-in.) pipe attached to the pump column and open at both ends. The tubing extends below the water surface to a point below estimated maximum drawdown (i.e., 3 feet above pump inlet). Water level measurements are taken inside the stilling pipe.

The following equipment is required for personal protection when working in the vicinity of a drilling or pump setting rig:

- safety shoes
- hard hat
- safety glasses.

The following additional equipment is required for working adjacent to noisy internal combustion engines:

- ear plugs or sound suppression ear muffs.

The following equipment is required when working with contaminated water:

- chemical-resistant coveralls
- chemical-resistant boots or boot coverings
- chemical-resistant gloves
- face shield
- sealing tape (duct tape)
- face masks with appropriate air filters or a supplied air source as determined by the safety officer and results of periodic monitoring.

Consult the Site Safety Plan, RCRA/CERCLA regulations, and OSHA regulations for additional information.

4.1.2 Safety Precautions

A drilling rig or a pump setting rig is used for hoisting pipe and other components during installation and removal of the pumping system. This activity poses potential hazards from falling or swinging objects and from pinch points. Additional hazards may exist during pumping. If the pump or drive motor is located above the ground surface, a rotating drive shaft may be present adjacent to the well measuring point. Contact with this shaft during operation by loose clothing, hair, or skin may cause severe or fatal injury. If an electric motor is used to drive the pump, temporary power cords and fuse boxes may be installed, and these represent a potential shock hazard.

Drive motors for pump setting machines may be noisy. This is especially true of large horsepower internal combustion engines used without benefit of mufflers.

If the ground water contains hazardous concentrations of contaminants (i.e., radioactive, organic, or inorganic chemicals), special precautions must be taken to protect workers and the environment. Before contact with this water or vapors in the borehole, personnel should refer to the required onsite documents referring to radiation protection, expected chemical contaminants, and worker safety. Water sample or borehole gas analysis taken during drilling should be examined for indications of hazardous materials before pumping water from the well.

At sites where contamination is known or suspected, field staff must have completed radiation safety training and hazardous material handling courses. Where organic compounds are suspected, staff must have completed hazardous material training. Periodic borehole gas monitoring while drilling and pump setting is also required. Disregard for these precautions may result in unnecessary exposure to hazardous chemicals and severe injury.

4.2 Step-by-Step Instructions

4.2.1 Setting the Pump

Position Responsible: PROJECT HYDROLOGIST AND WELL SITE GEOLOGIST

1. Determine the chemical and radiological hazard of the well water in association with the site safety officer and select level of worker protection.

2. Have the driller bail the well to remove bore slurry until relatively clean water with about 1 tablespoon of silt and sand per 5-gallon bucket is obtained in the bailer.

3. Ensure that the driller did collect, size, and steam clean all the equipment that will be used inside the well column (i.e., the pump, motor, riser pipe, submersible pump wire, stilling pipe, and associated fittings). In many cases, the well driller will provide these materials.

4. Collect and clean electric or engineers tapes and weighted steel tape to be used in measuring water levels.

NOTE: Record information on the Aquifer Test Well Information sheet (Figure 1).

9011774060

AQUIFER TEST WELL INFORMATION

Location _____ Date(s) of Test _____

Well Number _____ Procedure Number _____

BOREHOLE INFORMATION

Type of Test(s) _____ Well Depth _____

_____ Open Interval(s) _____

Well Diameter _____ Screen Type/Size _____

Observation Well(s) _____ Depth of Pump Intake _____

Comments _____

MEASUREMENT EQUIPMENT AND DATUM INFORMATION

Water-Level Measurements: Discharge Measurements:

Electric Tape(s) _____ Flow Meter(s) _____

Steel Tape(s) _____ Bucket and Stop Watch _____

Transducer/Datalogger(s) _____ Orifice Plate _____

Measuring Point _____ Other _____

Datum/Distance _____

Comments _____

WELL CONFIGURATION DIAGRAM (well as-built, pump setting)	WELL HEAD DIAGRAM (setup of pipes, valves, meters, etc)

FIGURE 1. Aquifer Test Well Information Sheet

9011774067

5. Lower a weighted tape (electric water level indicator or steel) and determine well depth and condition of bottom. Record findings on the Aquifer Test Well Information sheet (Figure 1). A sudden change in weight when lowering indicates a clean bottom. A gradual change in weight may indicate a mud and silt slurry on the well bottom.

6. Consult the geologist's drilling log to determine the total well depth and the thickness of any slurry on the bottom of the well. If the depth to the solid bottom of the well differs more than 1 feet from depth noted on the well log, inform the well-site geologist or project manager. Remember that drillers and geologists' measurements are normally relative to land surface. If there is a dense slurry at the bottom of the well greater than 2 feet thick have the driller continue bailing.

7. Measure the water level in the well according to Procedure WL-1.

8. Consult with well driller and review the Aquifer Test Plan (if one exists) to estimate well yield.

9. Determine the depth of the pump setting. Well development and hydrologic testing require a pump setting very near the bottom of the well. The pump should be set 0.5 to 2.5 feet above the bottom of the well. The driller or pump installer should have a selection of riser pipe lengths to produce this setting.

10. Ensure that the driller installs pumping devices and stilling pipe. Measure and record to the nearest 1/2 foot the distance of the pump inlet below the pump connection to the riser pipe (done before pump is set) and the total length of the riser pipe. The stilling pipe and transducers can be taped directly to the riser pipe during pump installation to avoid difficulties with tangled electric wires and tight spots along the well casing.

11. Measure the water level in the well.

12. Subtract the depth of the water level from the depth of the pump inlet. The maximum available pump drawdown is about 3 feet less than this distance.

5.0 REFERENCES

- Procedure WL-1, "Water-Level Measurement Procedure."
- Procedure WL-2, "Procedure for Standardizing Steel Tapes."

9011774060

AT-2 CONFIGURATION OF SURFACE FITTINGS AND MONITORING DEVICES FOR WELL DEVELOPMENT OR HYDROLOGIC TESTING

1.0 APPLICABILITY

This procedure applies to the set up and configuration of surface-based pumping and measurement devices used to develop and test wells.

2.0 DEFINITIONS

- Discharge pipe - the pipe that carries water away from the well to the point of disposal
- Riser pipe - the pipe connected to the pump that conducts water to the top of the well
- Well head - the top of the well where the riser pipe and the discharge pipe are connected. The term may also include an adjacent flow control valve and water sample outlet
- Flow control valve - a valve that places a physical restriction in the flow valve stream to reduce the rate at which water moves through the piping system
- Flow meter - a mechanical device that measures the flow rate and/or the cumulative flow of water in a pipe.

3.0 RESPONSIBLE STAFF

- Project Hydrologist
- Well-Site Geologist.

4.0 PROCEDURE

4.1 Prerequisites

4.1.1 Equipment

The following monitoring equipment is needed to prepare the well for testing and development:

- flow rate measuring devices (e.g., flow meter, bucket, and time piece)
- flow rate control valve (e.g., gate valve or ball valve)
- discharge pipe from well head to point of land disposal or water collection system
- Aquifer Test Well Information Sheet.

Measurement of well discharge or flow rate can be made by any the following methods:

- in-line impeller flow meter
- proportional impeller flow meter
- orifice plate and pressure measurement
- ultrasonic flow meter
- bucket and stop watch.

Discharge rate is difficult to measure accurately. The devices described above have various advantages for the given pumping situation. Absolute instrument accuracy for the flow meter should be within 10%.

Flow meters that are to be used for constant-discharge tests shall have been calibrated by a standards laboratory. Documentation of this calibration shall be available.

Whichever techniques are used to measure flow in the discharge line, two criteria must be met. First, the discharge pipe has to be full of water at the measurement point, and second, a straight section of pipe free of valves or diameter changes must be both upstream and downstream of the measurement device according to manufacturer's instructions. When flow rates are less than 40 gpm, a calibrated bucket of at least 5-gallon capacity and a time piece can provide a very accurate and reliable method for measuring flow.

Convey the discharge water into a collection system or as far away from the pumping and observation wells as is practical. Document the location of the discharge on the Aquifer Test Well Information sheet (Figure 1). Area-wide infiltration can reenter the aquifer and invalidate hydrologic tests. Temporary irrigation piping can be used to carry the water away from the site. Disposal must consider the rate and volume of water that is to be discharged.

The following equipment is required for personal protection when working in the vicinity of a drilling or pump setting rig:

- safety shoes
- hard hat
- safety glasses.

Consult the Site Safety Plan, RCRA/CERCLA regulations and OSHA regulations for additional information.

AQUIFER TEST WELL INFORMATION

Location _____ Date(s) of Test _____

Well Number _____ Procedure Number _____

BOREHOLE INFORMATION

Type of Test(s) _____ Well Depth _____

_____ Open Interval(s) _____

Well Diameter _____ Screen Type/Size _____

Observation Well(s) _____ Depth of Pump Intake _____

_____

Comments _____

MEASUREMENT EQUIPMENT AND DATUM INFORMATION

Water-Level Measurements: Discharge Measurements:

Electric Tape(s) _____ Flow Meter(s) _____

_____

Steel Tape(s) _____ Bucket and Stop Watch _____

_____

Transducer/Datalogger(s) _____ Orifice Plate _____

_____

Measuring Point _____ Other _____

Datum/Distance _____

Comments _____

WELL CONFIGURATION DIAGRAM (well as-built, pump setting)	WELL HEAD DIAGRAM (setup of pipes, valves, meters, etc)

FIGURE 1. Aquifer Test Well Information Sheet

4.1.2 Safety Precautions

A drilling rig or a pump setting rig is used for hoisting pipe and other components during installation and removal of the pumping system. This activity poses potential hazards from falling or swinging objects and from pinch points.

At sites where contamination is known or suspected, field staff must have completed radiation safety training and hazardous material handling courses. Where organic compounds are suspected, staff must have completed hazardous material training. Periodic borehole gas monitoring while drilling and pumping is also required. Disregard for these precautions may result in unnecessary exposure to hazardous chemicals and severe injury.

4.1.3 Other Prerequisites

This procedure requires the previous installation of the well pumping and measuring equipment in the well described in Procedure AT-1.

4.2 Step-by-Step Instructions

Position Responsible: PROJECT HYDROLOGIST OR WELL SITE GEOLOGIST

1. Determine disposal location for discharge water based on the existing Effluent Monitoring Plan, if one exists. Contaminated water may have to be contained at the site and then transported to an appropriate disposal facility.

NOTE: The steps below are usually performed by a well drilling contractor. The project hydrologist or well site geologist will advise the contractor and ensure the steps are carried out correctly.

NOTE: Record information on the Aquifer Test Well Information sheet (Figure 1).

2. Connect 90° angle tee or elbow fitting to riser pipe. Orient direction of piping such that access can be gained to well casing and pipe fittings without close contact to any possible rotating drive shafts or other machinery.

3. A short section of discharge pipe fitted with a hose faucet connection shall be mounted just before the flow control valve. This faucet should be at the bottom of the pipe and can be used to take water samples and flush sand from the discharge pipe before the sand reaches the flow meter. If available, connect this short section of pipe with faucet fitting to the elbow or tee fitting.

9 0 1 1 7 7 4 0 6 1 2

4. Place a straight section of pipe without couplings or fittings at least 10 pipe diameters or more downstream from the connection to the riser pipe or any other fitting. Then, if available, install impeller-type flow meter device and a straight pipe section at least 5 pipe diameters in length.

   Support pipe weight with portable stands or braces to prevent sagging of pipe. Pipe sections upstream and downstream of the flow meter should be nearly level.

5. Connect flow control valve to discharge pipe at a convenient distance to permit easy access for adjustment of the pumping rate. Gate valves can be used for this purpose, mounted with the valves sideways or upside down to ensure a full pipe upstream for proper flow meter operation and prevent air becoming trapped behind the valve and water discharging in surges.

6. Connect discharge pipe to flow control valve and continue to disposal location. Continue placing supports under pipe to allow a gradual bending toward ground.

7. Place a straight and level section of pipe without couplings or fittings at least 10 pipe diameters upstream of pipe end if an orifice plate is to be used to measure the flow rate.

CAUTION: Discharge line consisting of portable aluminum irrigation pipe normally leaks appreciable quantities of water at joint couplings. Measurement of flow at the end of the pipe line can be substantially less than the flow at the well head. Do not combine measurement methods such as orifice plate or bucket and time piece methods with portable irrigation pipe.

CAUTION: If portable aluminum pipe line is used to convey ground water to the disposal location, appreciable quantities of water may leak at joint couplings. These leaks may represent surface contamination depending on the quality of the ground water being pumped. Ground water must meet the Westinghouse Hanford Company interim standard of 1/25 of the DOE derived concentration guide for radioactive constituents and drinking water standards for all other (i.e., metals and organic) constituents to be disposed of at the land surface.

5.0 REFERENCES

- Procedure AT-1, "Setting and Instrumenting the Test Pump."

THIS PAGE INTENTIONALLY
LEFT BLANK

9 0 1 1 7 7 4 0 6 1 4

AT-3 STARTING THE PUMP AND CLEARING THE BOREHOLE OF CONSTRUCTION FLUIDS

1.0 APPLICABILITY

This procedure applies to the initial pumping of wells before well development or hydrologic testing.

NOTE: This procedure can be waived if the project hydrologist or well site geologist determines that the well has been adequately cleared of construction fluids by bailing.

2.0 DEFINITIONS

- Discharge pipe - the pipe that carries water away from the well to the point of disposal
- Pump - the mechanism used to lift water from the well
- Pump inlet - the location on the pump that water enters. It may be at bottom or along the side of the pump.
- Pump motor - the unit used to drive the pump. It may be combined with pump as an electric submersible unit or an internal combustion engine mounted above the well with a drive shaft to the pump.
- Riser pipe - the pipe connected to the pump that conducts water to the top of the well
- Well head - the top of the well where the riser pipe and the discharge pipe are connected. The term may also include an adjacent flow control valve and water sample outlet.
- Flow control valve - a valve that places a physical restriction in the flow stream to reduce the rate at which water moves through the piping system
- Flow meter - a mechanical device that measures the flow rate and/or the cumulative flow of water in a pipe.

3.0 RESPONSIBLE STAFF

- Project Hydrologist
- Well Site Geologist.

4.0 PROCEDURE

4.1 Prerequisites

4.1.1 Equipment

The following equipment is needed for the initial pumping of a monitoring well:

- an electric generator, internal combustion engine, or other power source
- water level measuring devices (e.g., steel or electric tapes)
- flow rate measuring devices (e,g., flow meter, bucket, and time piece)
- flow rate control valve (e.g., gate valve or ball valve)
- discharge pipe from well head to point of land disposal or water collection system
- Aquifer Test Well Information sheet
- Aquifer Test Data sheet.

Graduated steel tapes, electric tapes, and pressure transducers are commonly used to measure water levels. The measurement equipment must be in good condition, and instrument function should be confirmed before use in the field. Instrument precision should be sufficient to resolve drawdown to ±0.04 ft.

Steel tapes that are used shall have been standardized according to Procedure WL-2. Electrical tapes that are used shall have a precision of ±0.04 ft. Pressure transducers that are used shall have been calibrated by a standards laboratory. Documentation of standardization and calibration shall be available.

The following equipment is required for personal protection when working in the vicinity of a drilling or pump setting rig:

- safety shoes
- hard hat
- safety glasses.

The following additional equipment is required for working adjacent to noisy internal combustion engines:

- ear plugs or sound suppression ear muffs.

The following equipment is required when working with water containing unknown types or unknown levels of contaminants:

- chemical-resistant coveralls
- chemical-resistant boots or boot coverings
- chemical-resistant gloves
- face shield
- sealing tape (duct tape)
- face masks with appropriate air filters or a supplied air source as determined by the safety officer and results of periodic monitoring.

4.1.2 Safety Precautions

Precautions must be taken when starting the pump in the well. The intent of the following instructions is to avoid personal injury and/or damage to pumping equipment. If the pump or drive motor is located above the ground surface, a rotating drive shaft may be present adjacent to the well measuring point. Contact with this shaft during operation by loose clothing, hair, or skin may cause severe or fatal injury. If an electric motor is used to drive the pump, temporary power cords and fuse boxes may be installed and represent a potential shock hazard.

Drive motors for pump motor or electric generators may be noisy. This is especially true of large horsepower internal combustion engines used without benefit of mufflers.

If the ground water contains hazardous concentrations of contaminants (i.e., radioactive, organic, or inorganic chemicals), special precautions must be taken to protect workers and the environment. Before the start of well pumping, personnel should consult the required onsite documents (e.g., Effluent Monitoring Plans and Health and Safety Plans) referring to radiation protection, expected chemical contaminants, and worker safety. Water sample or borehole gas analysis taken during drilling should be examined for indications of hazardous materials before pumping large quantities of water from the well.

At sites where contamination is known or suspected, field staff must have completed radiation safety training and hazardous material handling courses. Where organic compounds are suspected, staff must have completed hazardous material training. Periodic borehole gas monitoring while drilling and pumping is also required. Disregard for these precautions may result in unnecessary exposure to hazardous chemicals and severe injury.

4.1.3 Other Prerequisites

This procedure requires the previous installation of well test pump (see Procedure AT-1), water level monitoring devices, and a discharge line to the ground-water disposal area (see Procedure AT-2).

4.2 Step-by-Step Instructions

4.2.1 Starting the Pump

Position Responsible: PROJECT HYDROLOGIST OR WELL SITE GEOLOGIST

1. Determine the chemical and radiological hazard of well water in association with the site safety officer, and select level of worker protection.

NOTE: Record pertinent information on the Aquifer Test Well Information sheet (Figure 1) and Aquifer Test Data sheet (Figure 2).

2. Partially close the flow control valve. This will prevent rapid dewatering of the well if the initial yield of the well is less than the capacity of the pump.

CAUTION: Reducing the discharge to a small portion of the pump capacity may cause rapid over pressurization of surface fittings and/or overheat a submersible pump motor. If in doubt, leave the valve fully open and be prepared to rapidly operate valve to reduce flow rate or to terminate pumping.

3. Start the internal combustion engine for the pump or electric generator and allow it to warm up for about 10 minutes.

4. Take a water level measurement in the well. Make all water level measurements from a consistent measuring point, which should be marked, and in accordance with Procedure WL-1, when possible. Record the totalizer meter reading on the Aquifer Test Data sheet if a flowmeter with a totalizer is used.

NOTE: Record all data on water level, flow rate, changes in water color, and time of observations on the Aquifer Test Data sheets (Figure 2). Record time of measurements based on a 24-hour clock (e.g., record 1:00 PM as 13:00 hours).

5. Start pump and determine if mechanical operation has begun. Electric submersible pumps can be very quiet at the surface. Feel the riser pipe at the well head, and check for minor vibration or humming noise.

AQUIFER TEST WELL INFORMATION

Location _____ Date(s) of Test _____

Well Number _____ Procedure Number _____

BOREHOLE INFORMATION

Type of Test(s) _____ Well Depth _____

_____ Open Interval(s) _____

Well Diameter _____ Screen Type/Size _____

Observation Well(s) _____ Depth of Pump Intake _____

Comments _____

MEASUREMENT EQUIPMENT AND DATUM INFORMATION

Water-Level Measurements: Discharge Measurements:

Electric Tape(s) _____ Flow Meter(s) _____

Steel Tape(s) _____ Bucket and Stop Watch _____

Transducer/Datalogger(s) _____ Orifice Plate _____

Measuring Point _____ Other _____

Datum/Distance _____

Comments _____

WELL CONFIGURATION DIAGRAM (well as-built, pump setting)	WELL HEAD DIAGRAM (setup of pipes, valves, meters, etc)

FIGURE 1. Aquifer Test Well Information Sheet

Aquifer Test Data

page ________ of ________

Data for Well ________
Pumping Well ________
Observation Wells ________
____

Location ________
Type of Aquifer Test ________
How Q Measured ________
How W.L.'s Measured ________
Rad./Dist. of/From Pumping Well ________
Meas. Point for W.L.'s ________
Elevation of Meas. Point ________

Depth of Pump/Airpipe ________
Pump On: date ________ time ________
Pump Off: date ________ time ________
Duration of Aquifer Test ________

Time t = ______ at t' = 0					Water Level Data Static Water Level ________					Discharge		Recorded By	Comments
Day	Clock Time	t	t'	t/t'	Reading	Conversions or Corrections	Water Level	s or s'		Reading	Q		

FIGURE 2. Aquifer Test Data Sheet

6. Observe the end of the discharge pipe, an open faucet installed in the discharge pipe, or the flow meter. Assure that water is flowing through the piping system. Water may require several seconds to fill the portion of riser pipe above the water table and reach the well head. Feel riser pipe at well head for temperature change (becoming colder in summer months and warmer in the winter), if no observable discharge points are available. The discharge pipe may take several tens of seconds or more to fill if the water disposal location is greater than 100 feet distant.

7. If no water is being discharged, stop the pump motor. The pump may not be receiving power, be mechanically sand locked, or is of insufficient power to lift water to the land surface.

8. Determine if the well has undergone rapid dewatering by listening for sucking sounds inside the casing, surging sounds inside piping, continuity of demand load on drive unit, and operation of flow meter.

9. Confirm that the well has not been dewatered by evaluating water level measurements. Based on measurements of pump inlet elevation and the maximum available drawdown, determine the present height of the water column above the pump inlet. A water column height of at least 3 feet above the pump inlet should be maintained at all times.

10. Record flow rate and color of discharge water. Inform site safety officer of any unusual odors at the well head. If organic contaminants are suspected of being present in the ground water, have an organic vapor detector reading taken at the point of discharge and at the well head.

11. Continue pumping at this initial rate for several minutes while observing rate of water level decline. If sufficient available drawdown exists, increase discharge rate with flow control valve. If possible, increase the flow rate as a step function, where the flow rate changes quickly and then maintains that rate for a period of 5 to 10 minutes.

12. Repeat steps 9, 10 and 11 until the pump is at full capacity or the maximum drawdown has been achieved. Observe the discharge water, and maintain pumping until water clears. Describe the size and amount of any sand grains or surface films in the discharge water. Sand- and silt-sized particles in the water are common in newly constructed wells.

13. Maintain a constant pumping rate for 20 to 30 minutes, and describe the final clarity and sand content of the discharge water.

14. Stop the pump unless Procedure AT-4, "Well Development," is to be performed immediately following clearing of construction fluids.

9011774062

15. Measure and record the water level as the well recovers from pumping. Record the totalizer meter reading on the Aquifer Test Data sheet if a flowmeter with a totalizer is used.

5.0 REFERENCES

- Procedure AT-1, "Setting and Instrumenting the Test Pump."
- Procedure AT-2, "Configuration of Surface Fittings and Monitoring Devices for Monitoring Well Development or Hydrologic Testing."
- Procedure WL-1, "Water-Level Measurement Procedure."
- Procedure WL-2, "Procedure for Standardizing Steel Tapes."

9011174062

AT-4 WELL DEVELOPMENT BEFORE HYDROLOGIC TESTING

1.0 APPLICABILITY

This procedure applies to developing wells for aquifer testing.

NOTE: Steps in this procedure may directly follow steps in Procedure AT-3.

2.0 DEFINITIONS

- Discharge pipe - the pipe that carries water away from the well to the point of disposal
- Pump - the mechanism used to lift water from the well
- Pump inlet - the location on the pump that water enters. It may be at bottom or along the side of the pump.
- Pump motor - the unit used to drive the pump. It may be combined with pump as an electric submersible unit or an internal combustion engine mounted above the well with a drive shaft to the pump.
- Well head - the top of the well where the riser pipe and the discharge pipe are connected. The term may also include an adjacent flow control valve and water sample outlet.
- Flow control valve - a valve that places a physical restriction in the flow stream to reduce the rate at which water moves through the piping system
- Flow meter - a mechanical device that measures the flow rate and/or the cumulative flow of water in a pipe
- Turbidity - a lack of clarity in the water as a result of suspended clay, silt, organic material, or inorganic constituents.

3.0 RESPONSIBLE STAFF

- Project Hydrologist
- Well-Site Geologist.

4.0 PROCEDURE

4.1 Prerequisites

4.1.1 Equipment

The following equipment is needed for well development:

- an electric generator, internal combustion engine, or other power source
- water level measuring devices (e.g., steel or electric tapes)
- flow rate measuring devices (e,g., flow meter, bucket, and time piece)
- flow rate control valve (e.g., gate valve or ball valve)
- discharge pipe from well head to point of land disposal or water collection system
- Aquifer Test Well Information sheet
- Aquifer Test Data sheet.

Graduated steel tapes, electric tapes, and pressure transducers are commonly used to measure water levels. A measurement device should be dedicated to each well for the test period. The measurement equipment must be in good condition, and instrument function should be confirmed before use in the field. Electric and steel tapes should be full length. Instrument precision should be sufficient to resolve drawdown to ±0.04 ft.

Steel tapes that are used shall have been standardized according to Procedure WL-2. Electrical tapes that are used shall have a precision of ±0.04 ft. Pressure transducers that are used shall have been calibrated by a standards laboratory. Flow meters that are used for constant-discharge tests shall have been calibrated by a standards laboratory. Documentation of calibration and standardization of this equipment shall be available.

The following equipment is required for personal protection when working in the vicinity of a drilling or pump setting rig:

- safety shoes
- hard hat
- safety glasses.

The following additional equipment is required for working adjacent to noisy internal combustion engines:

- ear plugs or sound suppression ear muffs.

The following equipment is required when working with water containing contaminants of unknown type or concentration:

- chemical-resistant coveralls
- chemical-resistant boots or boot coverings

- chemical-resistant gloves
- face shield
- sealing tape (duct tape)
- face masks with appropriate air filters or a supplied air source as determined by the safety officer and results of periodic monitoring.

4.1.2 Safety Precautions

Precautions must be taken when starting the pump in the well. The intent of the following instructions is to avoid personal injury and/or damage to pumping equipment. If the pump or drive motor is located above the ground surface, a rotating drive shaft may be present adjacent to the well measuring point. Contact with this shaft during operation by loose clothing, hair, or skin may cause severe or fatal injury. If an electric motor is used to drive the pump, temporary power cords and fuse boxes may be installed and represent a potential shock hazard.

Drive motors for pump motor or electric generators may be noisy. This is especially true of large horsepower internal combustion engines used without benefit of mufflers.

If the ground water contains hazardous concentrations of contaminants (i.e., radioactive, organic, or inorganic chemicals), special precautions must be taken to protect workers and the environment. Before the start of well development, personnel should consult the required onsite documents (e.g., Effluent Monitoring Plans and Health and Safety Plans) referring to radiation protection, expected chemical contaminants, and worker safety. Water samples or borehole gas analysis taken during drilling should be examined for indications of hazardous materials before pumping large quantities of water from the well.

At sites where contamination is known or suspected, field staff must have completed radiation safety training and hazardous material handling courses. Where organic compounds are suspected, staff must have completed hazardous material training. Periodic borehole gas monitoring while drilling and pumping is also required. Disregard for these precautions may result in unnecessary exposure to hazardous chemicals or severe injury.

4.1.3 Other Prerequisites

This procedure requires the previous installation of well pump (see Procedure AT-1), water level monitoring devices, and a discharge line to the groundwater disposal area (see Procedure AT-2). The initial pumping and clearing of borehole fluids is also required before using this procedure (see Procedure AT-3).

4.2 Step-by-Step Instructions

4.2.1 Developing the Well

Position Responsible: PROJECT HYDROLOGIST OR WELL-SITE GEOLOGIST

1. Determine the chemical and radiological hazard of the well water in association with the site safety officer, and select level of worker protection.

NOTE: Record pertinent information on the Aquifer Test Well Information sheet (Figure 1) and the Aquifer Test Data sheet (Figure 2).

2. Start pump following precautions outlined in Procedure AT-3, or continue from step 10 of Procedure AT-3, "Starting the Pump and Clearing the Borehole of Construction Fluids." Record the water level, flow rate, changes in water color, and time of observations on the standard Aquifer Test Data sheets (Figure 2). Measure water levels from a consistent measuring point, which should be marked. Record time of measurements based on a 24-hour clock (e.g., record 1:00 PM as 13:00 hours). Record totalizer reading on the Aquifer Test Data sheet if a flow meter with a totalizer is used.

NOTE: If the pump does not have a check valve and has been installed specifically for well development, go to step 3. If the pump has a check valve, go to step 5.

3. Increase pumping rate by opening flow control valve while closely measuring water level decline in well. Observe flowstream and note any change in color or clarity. Allow water level to reach maximum drawdown or a level about 3 feet above pump inlet.

4. Stop pumping by idling direct-drive engine or shutting off pump power on an electrical motor. Measure and record water level recovery. When water level recovers to about 80% of the difference between the initial static level and the maximum level during pumping, repeat steps 2 to 4 for at least 5 pump and recovery cycles. Record the pumping rate, maximum water level recovery between pumping cycles, the number of pumping and recovery cycles, and minimum water level during pumping.

CAUTION: Be alert for dewatering of the well. This condition is not serious if the pump is shut off as soon as air enters the pump. Determine if the well has undergone dewatering by listening for sucking sounds inside it, surging sounds inside piping, continuity of demand load on drive unit, operation of flow meter, or water levels reaching a point about 1 to 2 feet above pump inlet and then stabilizing.

9011774062 6

AQUIFER TEST WELL INFORMATION

Location _____ Date(s) of Test _____

Well Number _____ Procedure Number _____

BOREHOLE INFORMATION

Type of Test(s) _____ Well Depth _____

_____ Open Interval(s) _____

Well Diameter _____ Screen Type/Size _____

Observation Well(s) _____ Depth of Pump Intake _____

Comments _____

MEASUREMENT EQUIPMENT AND DATUM INFORMATION

Water-Level Measurements: Discharge Measurements:

Electric Tape(s) _____ Flow Meter(s) _____

Steel Tape(s) _____ Bucket and Stop Watch _____

Transducer/Datalogger(s) _____ Orifice Plate _____

Measuring Point _____ Other _____

Datum/Distance _____

Comments _____

WELL CONFIGURATION DIAGRAM (well as-built, pump setting)	WELL HEAD DIAGRAM (setup of pipes, valves, meters, etc)

FIGURE 1. Aquifer Test Well Information Sheet

9 0 1 1 7 7 4 0 6 2 7

Aquifer Test Data

page ________ of ________

Data for Well ________

Pumping Well ________

Observation Wells ________

____

Location ________

Type of Aquifer Test ________

How Q Measured ________

How W.L.'s Measured ________

Rad./Dist. of/From Pumping Well ________

Meas. Point for W.L.'s ________

Elevation of Meas. Point ________

Depth of Pump/Airpipe ________

Pump On: date ________ time ________

Pump Off: date ________ time ________

Duration of Aquifer Test ________

Time t = ______ at t' = 0					Water Level Data Static Water Level ________					Discharge		Recorded By	Comments
Day	Clock Time	t	t'	t/t'	Reading	Conversions or Corrections	Water Level	s or s'		Read-ing	Q		

FIGURE 2. Aquifer Test Data Sheet

5. Continue pumping at the initial rate for several minutes while observing the rate of water level decline. Maintain this pumping rate until water levels stabilize, or for a maximum of about 30 minutes. If sufficient available drawdown exists, increase discharge rate by opening flow control valve. If possible, increase the flow rate as a step function, where the flow rate changes quickly. Measure and record the water level.

6. Repeat step 5 until the pump is at full capacity or the maximum drawdown has been achieved. Observe and record the appearance of the discharge water, discharge rate, and water levels.

7. Well development at the maximum discharge rate or maximum drawdown should continue at a minimum until the water is clear (i.e., the bottom of a white plastic 5-gallon bucket is visible when filled with discharge water) and sediment removed from the aquifer is less than about 1 tablespoon of sediment for 5 gallons of water.

8. If a constant-discharge test is to be conducted using the existing pump and discharge configuration, set the flow control valve to allow the desired discharge rate. Record this discharge rate.

9. Take a final water level measurement and stop the pump. Make water level measurements following a water level measurement schedule of one measurement every minute for the first 5 minutes after pump shut off and then a measurement every 5 minutes. Continue taking water level measurements until the well recovers to the initial static level or 30 minutes of measurements have been taken. Record the totalizer reading on the Aquifer Test Data sheet if a flow meter with a totalizer meter is used.

5.0 REFERENCES

- Procedure AT-1, "Setting and Instrumenting the Test Pump."
- Procedure AT-2, "Configuration of Surface Fittings and Monitoring Devices for Monitoring Well Development or Hydrologic Testing."
- Procedure AT-3, "Starting the Pump and Clearing the Borehole of Construction Fluids."
- Procedure WL-2, "Procedure for Standardizing Steel Tapes."

9011774062 9

THIS PAGE INTENTIONALLY
LEFT BLANK

9 0 1 1 7 1 4 0 5 3 0

AT-5 CONSTANT DISCHARGE TEST

1.0 APPLICABILITY

This procedure applies to hydrologic testing in wells.

The overall purpose of this procedure is to provide guidance in aquifer test decision making for hydrologic characterization studies. Aquifer testing involves many variables and requires that important decisions be made while the test is in progress. Therefore, primary decisions concerning an aquifer test cannot be predetermined. This procedure assumes that Procedures AT-1, AT-2, AT-3, and AT-4 have been conducted at the well.

2.0 DEFINITIONS

- Data logger - a field computer that operates a transducer and records the measurements
- Discharge pipe - the pipe that carries water away from the well to the point of disposal
- Pump - the mechanism used to lift water from the well
- Pump inlet - the location on the pump that water enters. It may be at the bottom or along the side of the pump.
- Pump motor - the unit used to drive the pump. It may be combined with the pump as an electric submersible unit or an internal combustion engine mounted above the well with a drive shaft to the pump.
- Stilling pipe - a length of poly or steel pipe either attached to the riser pipe or inserted into the well. Water level measurements are made inside the stilling pipe to reduce the effects of water turbulence.
- Transducer - an electro-mechanical device for measuring water pressure
- Riser pipe - the pipe connected to the pump that conducts water to the top of the well
- Well head - the top of the well where the riser pipe and the discharge pipe are connected. The term may also include an adjacent flow control valve and water sample outlet.
- Aquifer test - a test to characterize the hydrologic properties of the geologic materials surrounding the well bore

9 0 1 1 7 7 4 0 6 3 1

- Flow control valve - a valve that places a physical restriction in the flow stream to reduce the rate at which water moves through the piping system

- Flow meter - a mechanical device that measures the flow rate and/or the cumulative flow of water in a pipe.

3.0 RESPONSIBLE STAFF

- Project Hydrologist
- Well-Site Geologist.

4.0 PROCEDURE

4.1 Prerequisites

4.1.1 Equipment

Equipment needed to perform an aquifer test is nearly the same as that needed for well development. In many instances, considerable savings in cost and effort can be made by planning a combined program of development and testing at each well using the same equipment. The pumping equipment needed to test the well include

- well pump with check valve

- an electric generator, internal combustion engine, or other power source

- water level measuring devices (e.g., steel or electric tapes, transducer, and data logger)

- stop watch(es) (if more than one are used, they shall be synchronized to within 1 second)

- flow rate measuring devices (e.g., flow meter, bucket, and time piece)

- flow rate control valve (e.g., gate valve or ball valve)

- discharge pipe from well head to point of land disposal or water collection system

- Aquifer Test Well Information sheet

- Aquifer Test Data sheets

- semilogarithmic graph paper

- flood lights (if testing will be conducted during non-daylight hours).

9011774063 2

The selection and sizing of pumping equipment is normally made following discussions among the well driller, the project hydrologist, and the well-site geologist and consulting the Aquifer Test Plan, if one has been written. Because the hydraulic properties at a newly drilled well have not yet been determined, estimation of the well yield is subject to uncertainty.

Graduated steel tapes, electric tapes, and pressure transducers are commonly used to measure water levels. A measurement device should be dedicated to each well for the test period. Back-up measurement equipment should also be available. The measurement equipment must be in good condition and instrument function (i.e., electric tapes and transducers) should be confirmed before use in the field. Instrument precision should be sufficient to resolve drawdown to ±0.04 ft.

Pressure transducers read water pressure directly and do not need to be installed inside of a stilling pipe. Refer to Procedure WL-3 or WL-4 for installation and use of pressure transducers and data loggers.

Steel tapes that are used shall have been standardized according to Procedure WL-2. Electrical tapes that are used shall have a precision of ±0.04 ft. Pressure transducers that are used shall have been calibrated by a standards laboratory. Flow meters that are used shall have also been calibrated by a standards laboratory. Documentation of calibration and standardization of this equipment shall be available.

The following equipment is required for personal protection when working in the vicinity of a drilling or pump setting rig:

- safety shoes
- hard hat
- safety glasses.

The following additional equipment is required for working adjacent to noisy internal combustion engines:

- ear plugs or sound suppression ear muffs.

The following equipment is required when working with water containing unknown contaminants or unknown concentration of contaminants:

- chemical-resistant coveralls
- chemical-resistant boots or boot coverings
- chemical-resistant gloves
- face shield
- sealing tape (duct tape)

- face masks with appropriate air filters or a supplied air source as determined by the safety officer and results of periodic monitoring.

Consult Site Health and Safety Plan, and RCRA, CERCLA, and OSHA requirements for additional information.

4.1.2 Safety Precautions

Pump or drive motor may be located above the ground surface and a rotating drive shaft may be present adjacent to the well measuring point. Contact with this shaft during operation by loose clothing, hair, or skin may cause severe or fatal injury. If an electric motor is used to drive the pump, temporary power cords and fuse boxes may be installed and represent a potential shock hazard. Drive motors for pump setting machines may be noisy. This is especially true of large horsepower internal combustion engines used without benefit of mufflers.

If the ground water contains hazardous concentrations of contaminants (i.e., radioactive, organic, or inorganic chemicals), special precautions must be taken to protect workers and the environment. Before the start of well development, personnel should examine the required onsite documents (e.g., Effluent Monitoring Plan and Health and Safety Plan) referring to radiation protection, expected chemical contaminants, and worker safety. Water sample or borehole gas analysis taken during drilling should be examined for indications of hazardous materials before pumping large quantities of water from the well.

At sites where contamination is known or suspected, field staff must have completed radiation safety training and hazardous material handling courses. Where organic compounds are suspected, staff must have completed hazardous material training. Periodic borehole gas monitoring while drilling and pumping is also required. Disregard for these precautions may result in unnecessary exposure to hazardous chemicals and severe injury.

4.1.3 Other Prerequisites

Procedures AT-1 "Setting and Instrumenting the Test Pump;" AT-2 "Configuration of Surface Fittings and Monitoring Devices for Well Development or Hydrologic Testing;" AT-3 "Starting the Pump and Clearing the Well Bore of Construction Fluids;" and AT-4 "Well Development Before Hydrologic Testing" should have been followed at this well previously. Pumping rate should be determined through analysis of the results of AT-4.

9011774063 4

4.2 Step-by-Step Instructions

Position Responsible: PROJECT HYDROLOGIST OR WELL-SITE GEOLOGIST

4.2.1 Conducting the Constant Discharge Test

1. Determine the chemical and radiological hazard of the well water in association with the site safety officer, and select level of worker protection.

NOTE: Record all pertinent information on the Aquifer Test Well Information sheet (Figure 1) or the Aquifer Test Data sheets (Figure 2).

2. Install water-level measuring equipment in the pumping and observation wells and measure the water level in the wells. This equipment may be installed, and data collected, some time before aquifer testing to establish pre-test trends. When making these and other measurements, record the data on water level, flow rate, and time of observations on the standard Aquifer Test Data sheets. Record time of measurements based on a 24-hour clock (e.g., record 1:00 PM as 13:00 hours). Take water level measurements in each well from a consistent measuring point, which should be marked. Also record the well casing inside diameter, screen inside diameter, pump diameter, pump column (riser pipe) outside diameter, the depth to the bottom of the pump, and location of the pump intake on the Aquifer Test Well Information sheet. In addition, record the measurement point (or reference point) location, and vertical distance to a reference point (usually land surface) (±0.1 foot or better), locations of the observation wells in relation to the pumping well, and distance between the pumping well and all observation wells (±1.0 foot or better). These data can be collected before or after the aquifer test. Record the totalizer reading on the Aquifer Test Data sheet if a flowmeter with a totalizer meter is used.

NOTE: Entries onto the Aquifer Test Data sheets shall be initialed when so indicated under "Recorded by" column.

3. Start internal combustion engine for pump or electric generator and allow it to warm up for about 10 minutes. The desired discharge rate should have been determined during well development (Procedure AT-4), and the flow control valve previously set. The riser pipe should be full before starting the test. If the flow control valve has not been previously set, partially close the valve. If the riser pipe is not full, turn on the pump for a short time (less than 10 minutes should suffice) until water is being pumped through the discharge line. If the discharge rate has not previously been set by adjusting the flow control valve, it can be adjusted at this time. The transducer/data logger system can also be checked for proper operation at this time. Turn the pump off.

AQUIFER TEST WELL INFORMATION

Location _____ Date(s) of Test _____

Well Number _____ Procedure Number _____

BOREHOLE INFORMATION

Type of Test(s) _____ Well Depth _____

_____ Open Interval(s) _____

Well Diameter _____ Screen Type/Size _____

Observation Well(s) _____ Depth of Pump Intake _____

Comments _____

MEASUREMENT EQUIPMENT AND DATUM INFORMATION

Water-Level Measurements: Discharge Measurements:

Electric Tape(s) _____ Flow Meter(s) _____

Steel Tape(s) _____ Bucket and Stop Watch _____

Transducer/Datalogger(s) _____ Orifice Plate _____

Measuring Point _____ Other _____

Datum/Distance _____

Comments _____

WELL CONFIGURATION DIAGRAM (well as-built, pump setting)	WELL HEAD DIAGRAM (setup of pipes, valves, meters, etc)

FIGURE 1. Aquifer Test Well Information Sheet

Aquifer Test Data

SAMPLE DATA SET

page 1 of 3

Data for Well 21-H2-14

Pumping Well SAME

Observation Wells —

Location 200 E

Type of Aquifer Test DEV & CONSTANT Q

How Q Measured FLOW METER # 179-84-32, BUCKET 6 GAL

How W.L.'s Measured ETAPE # 3374

Rad./Dist. of/From Pumping Well —

Meas. Point for W.L.'s TOC TOP OF CASING

Elevation of Meas. Point 1.7 ABOVE L.S.

Depth of Pump/Airpipe 312'

Pump On: date 6-12-87 time

Pump Off: date 6-12-87 time

Duration of Aquifer Test

Time t = at t' = 0					Water Level Data Static Water Level					Discharge		Recorded By	Comments
87 Day	Clock Time	t	t'	t/t'	Reading	Conversions or Corrections	Water Level	s or s'		Reading	Q		
6-12	13:10						285.75					PLO	PRETEST
	13:22						285.76					PLO	"
	13:28						285.75			FT+10	GPM	PLO	"
	13:30	0					285.75			21743		PLO	START TEST ONE
	13:31	1					—				50	PLO	WATER VERY DIRTY
	13:32	2					287.71				~45	PLO	
	13:33	3					297.0				40	PLO	
	13:34	4					298.22				—	PLO	WATER CLEARING
	1335	5					—			21745	38	PLO	
	13:36	6					299.51				—	PLO	
	13:37	7					302.49				—	PLO	SOME SAND IN PIPE
	13:38	8					—				325	PLO	
	13:39	9					305.02				—	PLO	
	13:40	10					305.06			21748	370	PLO	STOP
	13:45						288.9					PLO	RECOVERY
	13:50						286.23					PLO	NEW Q = 1 gpm
	13:55						285.90					PLO	
	13:56	0					285.87			21749		PLO	START TEST TWO
	13:57	1					290.—				20	PLO	ADJ Q
	13:58	2					291.03				15	PLO	" " CLEAR
	13:59	3					293.12				8	PLO	" "
	1400	4					294.30				10	PLO	" "
	1401	5					295.11				—	PLO	
	1402	6					295.25				7	PLO	" "
	1403	7					295.69				10	PLO	" "
	1405	9					296.97				10	PLO	WATER CLEAR YELLOW
	1406	10					297.30				9.5	PLO	38 SEC / 6 gal
	14:08	12					297.93				10	PLO	↳ NO SAND
	14:11	15					298.40				10	PLO	
	14:13	17					298.67				—	PLO	
↓	14:16	20					299.31			21750	10	PLO	36 SEC / 6 gal
	14:17	21	0	—			299.33					PLO	OFF
	14:19	22	1	22			292.—					PLO	
	14:19	23	2	11.5			290.11					PLO	
	14:20	24	3	8			289.53					PLO	
	14:21	25	4	6.25			288.22					PLO	
	14:22	26	5	5.2			289.51					PLO	
	14:24	28	7	4			288.25					PLO	
↓	14:26	30	9	3.3			287.57					PLO	

FIGURE 2. Aquifer Test Data Sheet

CAUTION: Reducing the discharge to a small portion of the pump capacity may cause rapid over-pressurization of surface fittings and/or overheat a submersible pump motor. If in doubt, leave the valve fully open and be prepared to rapidly operate the flow control valve to reduce flow rate or to terminate pumping.

4. Prepare the data logger to collect pressure data at the desired frequencies. Refer to Procedure WL-3 or WL-4. Set the data logger to start at the planned time that the pump will be started (this ensures that very early time data are not missed).

5. Take a water level measurement in the pumping and observation wells. Compare this measurement with the measurement taken in step 2. Water level changes greater than 0.05 feet indicate well recovery from development or other pre-test pumping. Wait 10 minutes and confirm water level stability. Record the totalizer reading on the Aquifer Test Data sheet if a flow meter with a totalizer is used.

6. Record the well number, date, and time of day. Start the pump and determine if mechanical operation has begun. Electric submersible pumps can be very quiet at the surface. Feel the riser pipe at the well head and check for minor vibration or humming noise.

7. Begin making water level measurements (see steps 13 and 14) in the pumping and observation wells. Water level measurements should be taken frequently at the beginning of the test, with the frequency decreasing as the length of the test increases. An example schedule is given in Table 1. A frequency of one minute may not be sufficient in some cases.

TABLE 1. Common Frequency of Data Collection in Aquifer Testing

Time Since the Start of Pumping (minutes)	Measurement Frequency
0-10	every 1 minute
10-20	every 2 minutes
20-40	every 5 minutes
40-80	every 10 minutes
80-120	every 20 minutes
120-360	every 30 minutes
360-600	every 40 minutes
600-1440	every 60 minutes
1440 on	every 120 minutes

9 0 1 1 7 7 4 0 6 3 8

8. Observe the end of the discharge pipe, an open faucet installed in the discharge pipe, or the flow meter. Assure that water is flowing through the piping system. Feel riser pipe at well head for temperature change (becoming colder in summer months and warmer in winter time), if no observable discharge points are available. The discharge pipe may take several tens of seconds or longer to fill if the water disposal location is greater than 100 feet distant.

NOTE: If no water is being discharged, stop pumping. The pump may not be receiving power, may be mechanically sand locked, or may be of insufficient power to lift water to the land surface.

NOTE: Determine if the well has undergone rapid dewatering by listening for sucking sounds inside it, surging sounds inside piping, continuity of demand load on drive unit, and operation of flow meter.

9. Confirm that the well has not been dewatered by evaluating the water level measurements. Based on measurements of pump inlet elevation and the maximum available drawdown, determine the present height of the water column above the pump inlet. A water column height of at least 3 feet above the pump inlet should be maintained throughout the test. If this level of drawdown occurs in the early portion of a test, the test may have to be prematurely terminated.

10. Check and record flow rate at one-quarter to one-half the frequency at which water level measurements are made. Previous experience or scoping calculations will allow an approximation of the proper pump discharge based on transmissivity and height of the water column in the bore.

11. Based on the desired pumping rate and the results of steps 6 through 10, adjust the pumping rate with the flow control valve. Discharge adjustment to the planned rate should be made as early in the test as possible. If the well is being pumped at a rate too low, the rate can be increased without stopping the pump because the system is understressed.

    If the rate is far too high (i.e., the well ran dry), stop the pump and record water level recovery data to aid in determining a long-term sustainable pumping rate. The test can be restarted at the lower pumping rate following water level recovery. The well should be allowed to recover to at least 95% of the static level before resuming the test. The period of recovery is approximately equal to the pumping period.

NOTE: Adjusting the discharge rate by changing engine speed of the drive unit is not usually precise enough to maintain the discharge rate within prescribed limits. Pumping rates, especially at early times, require regular monitoring and adjustment to maintain a steady rate.

As water levels drop, the total hydraulic head is increased, and discharge rates commonly decrease. Small scale adjustment to discharge rate may not be discernable with instantaneous indicators. Time-averaged discharge rates over 10-minute intervals from a totalizing meter are generally sufficient to accurately determine discharge rate. Discharge rates should be measured and adjusted as required throughout the test. Variation of discharge rate should be limited and maintained within 10% of the nominal rate.

NOTE: Once a pumping rate has been established reasonably close to the desired rate, it is best to conduct the test at that operational pumping rate. Flow rate adjustment is not a linear function of valve operation. Small valve adjustments can cause large changes in flow rate causing oscillations between values higher than and lower than the planned pumping rate.

12. Record flow rate and color of discharge water. Inform site safety officer of any unusual odors at the well head. If organic contaminants are suspected of being present in the ground water, have an organic vapor detector reading taken at the point of discharge and at the well head.

13. Continuously evaluate drawdown at the pumping well and observation well(s) during the test to assure that the changes in water level are recorded at the appropriate frequency. The early portion of the test requires a more rapid data collection rate than at later times. The objective is not to collect data according to a strict predetermined standard, but to collect an appropriate amount of data to describe what is happening to the water levels. A minimum rate of data collection is 10 measurements for each cycle of logarithmic time (e.g., the period from 0 to 10 minutes or 10 to 100 minutes). A common schedule is provided in Table 1.

    Data loggers can be programmed to measure the water level every 1 to 2 minutes throughout the test and will record the water level response in great detail. Although this frequency of measurement is not needed to track events during the test, it assures that any unusual events or responses are recorded in their entirety and requires no additional effort by the field staff.

14. Observation wells exhibit a time delay between the start of pumping and water level response. Measure response of observation wells at regular intervals of 2 to 10 minutes (depending on responses observed in pumping well) to ascertain the initiation of drawdown. When the observation well begins to draw down in response to pumping, reset the measurement frequency to the measurement schedule used at the beginning of the test at the pumping well. The frequency of measurements in observation wells should be sufficient to describe the changes in water level(s) that are occurring.

15. Plot the water level and flow rate measurements taken in the early portion of the test and all subsequent water level measurements on semi-log graph paper to track well response during pumping. Evaluate the drawdown response in the first 10 to 20 minutes of pumping. A data trend, under most circumstances, will be established by this point in the test. Plot time since the start of pumping in minutes along the logarithmic X axis. Plot water level decline from static level (drawdown) and flow rate along the Y axis as illustrated in Figure 3. The semi-log data plot should indicate a linear trend.

    Analysis of drawdown response and pumping rate are needed to confirm that test conditions are producing interpretable data. A change in the rate of drawdown may be the result of a hydrologic effect or a change in the pumping rate. Assuming the well yield is reasonably close to the expected value, an estimate of drawdown per logarithmic time cycle can be determined. The slope of the semi-log drawdown plot is directly proportional to pumping rate. Therefore, if the slope indicates that over a specified pumping period the well will have twice as much drawdown as planned, the pumping rate can simply be cut in half. Carefully monitor well response and maintain a constant pumping rate to provide quality data for interpretation. If the drawdown rate is acceptable, the initial rate can be maintained and the test continued. If the drawdown rate is excessive, stop the pump and follow the instructions in step 11.

16. Examine the field data plots for the pumping and observation wells to determine if the measurement frequency is appropriate. The overriding objective is to define the water level changes occurring in the well(s). If conditions are regular and slowly changing, then a standard frequency is adequate. Sudden water level changes or any other change that results in a nonlinear response as noted on the semi-log data plot requires an increase in sampling frequency. The frequency of measurements should be sufficient to describe any variance that occurs.

17. Data analysis during the test aids in determining when enough information has been collected. Events such as mechanical failure may terminate the pumping portion of the test. In that case, begin recovery data collection immediately. Other events such as intercepting a recharge boundary or the well reaching equilibrium may suggest termination of pumping before the scheduled end of the test. If data are erratic or static over a significant portion of the test period, shut down the pump and record the recovery data.

    Analyze drawdown data in the field by the Cooper-Jacob method (Cooper and Jacob 1946) to determine when sufficient data have been collected for analysis. If an observation well is used, ensure that the condition that "u" is less than 0.01 is met for a sufficient amount of data from which to make an analysis.

9011774064 1

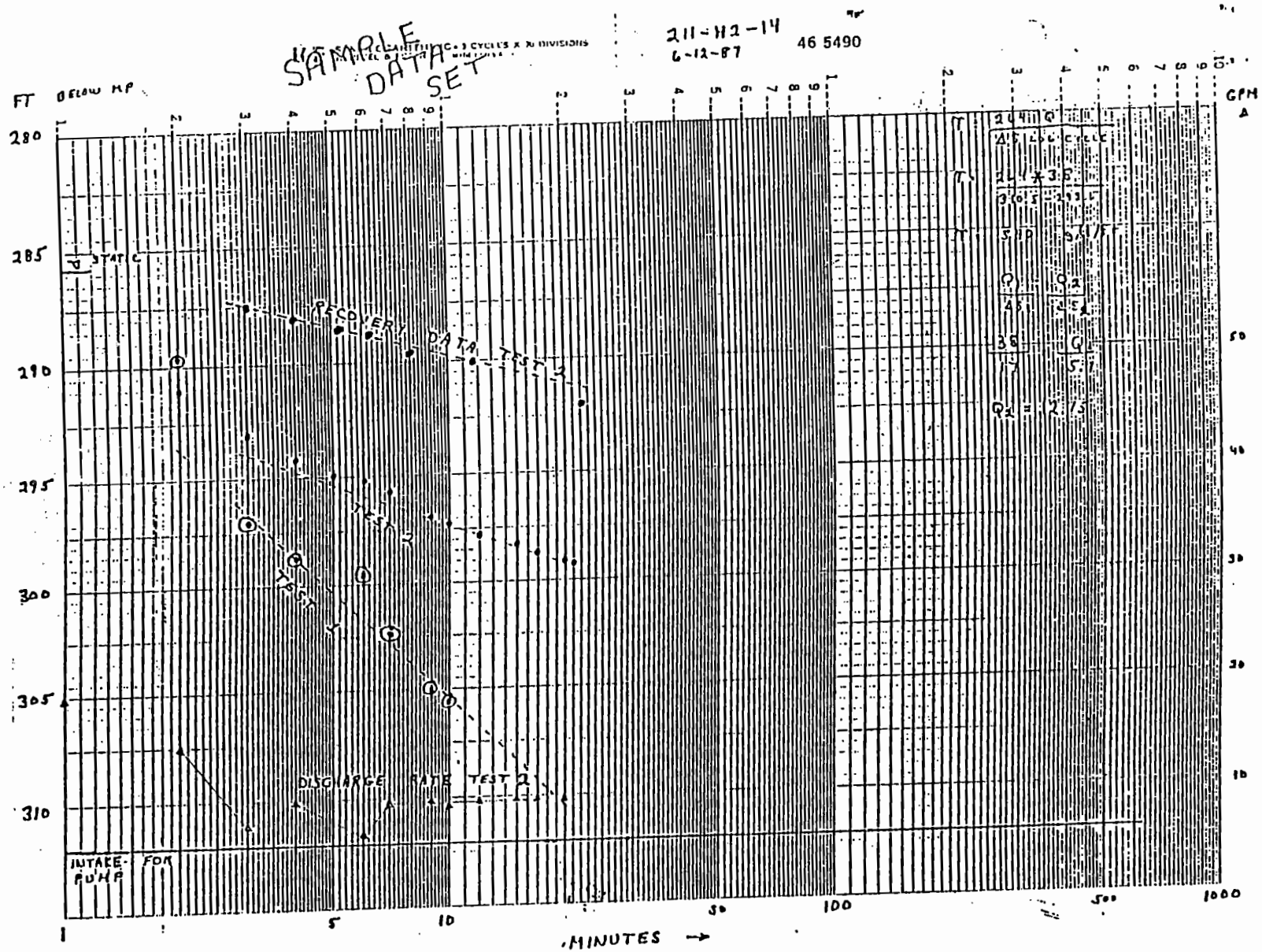

FIGURE 3. Example of Semi-Log Graph Paper Used to Track Well Response During Pumping

NOTE: It must be recognized that it is improper to terminate a test solely on the basis of a predetermined test interval. If the field data plots indicate that interesting or unusual data trends are developing, consider extending the pumping period. Examples of unusual data trends include sudden changes in the slope of the drawdown plot, water level increases, and water levels following a step-like pattern. Illustrative cases are found in Chapter 16 of Groundwater and Wells (1986). In many cases, additional pumping time is necessary to properly define the hydraulic effect that is being noted. Identification and interpretation of such events is fundamental to aquifer characterization.

18. Prepare the data logger to collect recovery data at a frequency similar to that for drawdown data. Set the data logger to start recording at the planned time that the pump will be shut off.

19. Turn off the pump and observe water-level recovery in all wells. Repeat a data collection frequency similar to Table 1 or that which was used in observing drawdown. Record the totalizer reading on the Aquifer Test Data sheet if a flow meter with a totalizer meter is used.

20. Analyze recovery data in the field by the Cooper-Jacob method (Cooper and Jacob) to demonstrate when useful data are no longer being collected. Data loggers can be allowed to continue operation for 12 to 24 hours after the pump is shut off.

NOTE: Example data sheets and data plots are presented in Figures 1 and 2. These figures demonstrate some of the analyses that are useful in guiding the early stages of an aquifer test. The example data plot compresses several types of information (i.e., two short episodes of drawdown, discharge rate for the second test, and water level recovery) onto a single sheet. For convenience and clarity, multiple sheets can be used. Figures 1 and 2 demonstrate the data that must be recorded to document test activities. Figure 2 illustrates that the initial discharge rate was adjusted to a lower value and the test restarted. The length of the tests is not representative.

NOTE: Interpretation of aquifer tests beyond the level described above is outside the scope of test procedures.

5.0 REFERENCES

- Cooper, H. H., Jr., and C. E. Jacob. 1946. "A Generalized Graphical Method for Evaluating Formation Constants and Summarizing Well-Field History." Am. Geophys. Union Trans. 12(4):526-534.

- Driscoll, F. G. 1986. Groundwater and Wells. Johnson Division, St. Paul, Minnesota.

9011774064 3

- Procedure AT-1, "Setting and Instrumenting the Test Pump."
- Procedure AT-2, "Configuration of Surface Fittings and Monitoring Devices for Monitoring Well Development or Hydrologic Testing."
- Procedure AT-3, "Starting the Pump and Clearing the Borehole of Construction Fluids."
- Procedure AT-4, "Well Development Before Hydrologic Testing."
- Procedure WL-2, "Procedure for Standardization of Steel Tapes."
- Procedure WL-3, "Installation, Operation, and Removal of the Instrumentation Northwest Datalogger and Pressure Transducer with an IBM-Compatible Terminal Device."
- Procedure WL-4, "Installation, Operation, and Removal of a Data Logger and Pressure Transducer."

9011774064

AT-6 AQUIFER SLUG INJECTION AND WITHDRAWAL TEST

1.0 APPLICABILITY

This procedure applies to conducting slug tests in single wells or piezometers with various configurations before or after the wells or piezometers have been developed or completed. Slug tests are initiated by causing an instantaneous change in hydraulic head through a sudden introduction or removal of a known volume (a cylinder) and then observing the water-level recovery response with time (Lohman 1979).

Slug testing yields an estimate of in situ hydraulic conductivity near a well. The representativeness of the estimate depends on the hydrogeologic conditions and the quality of the well (Hvorslev 1951). It also depends on how the test is performed.

Other procedures that are applicable in conducting slug tests are WL-1, WL-3, and WL-4.

2.0 DEFINITIONS

- Data Logger - a field computer that operates a transducer and records the measurements
- Transducer - an electro-mechanical device for measuring water pressure
- Aquifer Test - a test to determine the hydrologic properties of the geologic materials surrounding the well bore
- Slug Test - a test to determine the hydrologic properties of the geologic materials surrounding the well bore, conducted by suddenly introducing or withdrawing a cylinder of known volume and then observing the change in water level with time.

The word "well" shall refer to well or piezometer throughout this procedure.

3.0 RESPONSIBLE STAFF

- Project Hydrologist
- Well-Site Geologist.

4.0 PROCEDURE

4.1 Prerequisites

4.1.1 Equipment

- cylinder of known volume
- supporting line (e.g., cable or monofilament fishing line)

9011774064 5

- water-level measuring devices (e.g., standard steel tape, electric water-level indicator, or calibrated transducer and data logger)
- engineering measuring tape
- stop watch(es)
- Slug Test Record Forms (Figure 1)
- Aquifer Test Data Sheets (Figure 2).

A drilling or pump setting rig may be required to lower or lift the known volume (cylinder) in the well if the cylinder is too heavy to hold manually.

If more than one stop watch is used, synchronize all stop watches to within 1 sec.

4.1.2 Safety Precautions

The following equipment is required for personal protection when working in the vicinity of a drilling or pump setting rig:

- safety shoes
- hard hat
- safety glasses.

The following equipment may be required as specified by the site safety officer:

- chemical-resistant coveralls
- chemical-resistant boots or boot coverings
- chemical-resistant gloves
- face shield
- sealing tape (duct tape)
- face masks with appropriate air filters or a supplied air source as determined by the safety officer and results of periodic monitoring.

A drilling or pump setting rig may be used to lower or lift the cylindrical volume. These activities pose potential hazards from falling or swinging objects.

At sites where contamination is known or suspected, field staff must have completed radiation safety training and hazardous material handling courses. Where organic compounds are suspected, staff must have completed hazardous

Location_____ Date of Test_____

Well Number_____ Procedure Number_____

Type of Test(s)_____

Personnel Conducting Test_____

WELL CONFIGURATION

Well Depth_____ Borehole Diameter_____

Well Casing
Inside Diameter_____ Well Screen
Inside Diameter_____

Length of Screened Interval_____ Depth of Screen_____

Comments_____

SLUG INFORMATION

Slug Construction Materials_____

Length of Slug_____ Diameter of Slug_____

Comments_____

Volume of Attachments (if applicable)_____

MEASUREMENT EQUIPMENT INFORMATION

	Make	Model	Serial Number
Electric Tape			
Steel Tape			
Data logger			
Transducer			
Other			

FIGURE 1. Slug Test Record Form

9011774064 7

Aquifer Test Data

page ________ of ________

Data for Well ____________

Pumping Well ____________

Observation Wells ____________

____

Location ______________________________

Type of Aquifer Test ______________________________

How Q Measured ______________________________

How W.L.'s Measured ______________________________

Rad./Dist. of/From Pumping Well ______________________________

Meas. Point for W.L.'s ______________________________

Elevation of Meas. Point ______________________________

Depth of Pump/Airpipe ______________________________

Pump On: date ____________ time ____________

Pump Off: date ____________ time ____________

Duration of Aquifer Test ______________________________

Time t = ______ at t' = 0					Water Level Data Static Water Level ____________					Discharge		Recorded By	Comments
Day	Clock Time	t	t'	t/t'	Reading	Conversions or Corrections	Water Level	s or s'		Read-ing	Q		

FIGURE 2. Aquifer Test Data Sheet

90117740643

material training. Disregard for these precautions may result in unnecessary exposure to hazardous chemicals and severe injury.

4.1.3 Other Prerequisites

The cylindrical slug shall be constructed of materials that will not introduce contaminants or other debris into the well.

4.2 Step-by-Step Instructions

4.2.1 Conducting the Slug Injection Test

Responsible Staff: PROJECT HYDROLOGIST and/or WELL-SITE GEOLOGIST

1. In association with the site safety officer, determine the chemical and radiological hazard of the well water, and select level of worker protection.

2. Select a slug whose outside diameter is less than the inside diameter of the well casing or screen below the water level. The diameter of the slug must be such that it allows clearance for an electric water-level indicator probe to fit in the space between the slug and the screen or casing. The transducer, cable, cable connections, or other possible obstructions in the well; height of the water column; supporting line tension limitations; and expected water-level response during testing must also be considered when selecting the slug size.

NOTE: It is recommended that the chosen cylindrical slug be constructed of heavy materials, such as carbon steel casing filled with sand and sealed at both ends. This will allow the slug to drop quickly in the water when it is released.

3. Record information pertaining to the test on a Slug Test Record Form (Figure 1). Record the location of the test, date of test, well number, procedure number, type of test(s), and personnel conducting the test under the correct Slug Test Record Form heading. Record the well depth, borehole diameter, well casing inside diameter, well screen inside diameter, length of screened interval, depth of screen, and any comments specific to the well configuration under "Well Configuration." Record the construction materials of the slug, length of slug, diameter of slug, and any other comments regarding the slug under "Slug Information." Record the volume of other attachments (e.g., cable or eye hook) that possibly may cause significant displacement of the water. Also record the make, model, and serial number of all measurement equipment used for the test under "Measurement Equipment Information." Information can be entered on the Slug Test Record Form before or after the slug test.

9 0 1 1 7 7 4 0 6 4 9

4. Synchronize all timing pieces (watches or clocks) that will be used during the slug test. Also synchronize watches with the clock in the data logger. This should be done before activating the data logger in step 7.

5. Measure the static water level in the well being tested using a standard steel tape and an electric water-level indicator according to Procedure WL-1. Measure from an established measurement reference point. Record all data on water level and time of observations on the Aquifer Test Data Sheet shown in Figure 2. Record the time of measurements based on a 24-hour clock (e.g., record 1:00 PM as 13:00 hours). Record the location of the measurement reference point on the Aquifer Test Data Sheet. Also sketch a diagram of the well head configuration to show the reference points, current configuration of the well head, and the equipment setup. Attach the diagram to the Aquifer Test Data Sheet after the test is completed.

6. If you plan to monitor the water level with a recorder during the slug injection test, install a transducer in the well according to Procedure WL-3 or WL-4. Make sure that the transducer, cable, or any attached couplings will not interfere with the introduction of the slug. If, by displacement, submergence of the probe causes the water level to rise above the static water level, allow the water level to recover before proceeding.

7. Activate the data logger to begin collecting baseline data at a constant time interval of 5 min or less. Preset the data logger to collect data according to a logarithmic time scale for the actual slug test. The data logger should be set to measure and record water-level data at a sufficient rate to describe the response of the water levels during the test. A recommended schedule is provided in Table 1.

TABLE 1. Frequency of Data Collection for Slug Testing

Time Since the Start of Injection or Withdrawal (sec)	Measurement Frequency Interval (sec)
0-10	1
10-30	2
30-100	5
100-300	20
300-600	50
600-1200	100
1200-3600	300
> 3600	600

9011774065 0

8. Attach the slug to the supporting line on the rig or other support. Make sure the slug is attached securely. If you plan to introduce the slug into the water manually, secure the end of the supporting line.

Steps 9, 10, and 12 should be used only as a guide in positioning and releasing the slug and do not have to be strictly adhered to. It is important to ensure that the bottom of the slug is above the static water level before it is released and that the top of the slug is below the static water level after it is released.

9. Measure from the end of the slug with an engineering measuring tape and mark off the supporting line. Suspend the slug in the well so that the bottom of the slug is 0.1 feet above the static water level. Use the steel tape measurement performed in Step 5 to determine the correct position of the slug. Be careful not to immerse any part of the slug into the water while positioning the slug. If the slug is inadvertently immersed in the water, reposition the slug and allow the water level to return to static before proceeding.

NOTE: Ideally, the slug should be placed as close to the water as possible before it is released. This will reduce the pressure wave caused by splashing upon impact.

10. Mark the supporting line at a fixed point (e.g., top of well casing). This mark will be referred to as the unsubmerged reference point. Mark the supporting line beyond the unsubmerged reference point at a distance equal to at least 0.1 feet greater than the length of the slug. This mark will be referred to as the submerged reference point.

11. If, for some reason (e.g., delays in setting up equipment), the predetermined time of the beginning of the slug test has changed, reset the data logger to the new time.

12. At the predetermined time quickly release the slug into the well and allow the slug to drop until the submerged reference point reaches at least the level of the fixed point. This will ensure that the slug is completely submerged in the water below the static water level.

13. Measure the water level with an electric water-level indicator at the instant the slug is completely submerged and record the water level on the Aquifer Test Data Sheet. Continue to measure and record water-level data at a sufficient rate possible to describe the response of the water levels. A schedule is provided in Table 1. It may not be possible to measure the water level during the first 100 sec as frequently as scheduled. Measurements every 10 sec for the first 100 sec of the test will suffice when using an electric water-level indicator.

9011774065

NOTE: It is recommended that the times of measurements for at least the first 30 min be prerecorded on the Aquifer Test Data Sheet <u>before</u> conducting the test. This will alleviate confusion as to when each measurement should be taken.

14. Continue to measure and record the water-level recovery until H/H_0 is less than 0.1 (Cooper et al. 1967) where

    H = head inside the well at time t after injection of the slug, above the initial head

    H_0 = head inside the well above the initial head at the instant the slug is injected.

NOTE: Step 14 should be used only as a guide because it may not be possible to attain $H/H_0 < 0.1$ within a reasonable time. The length of the test should be left to the discretion of the Project Hydrologist.

15. When all testing is completed, remove the slug from the well.

4.2.2 Conducting the Slug Withdrawal Test

1. Perform Steps 1 through 5 in Section 4.2.1. Ignore the note following Step 2 in Section 4.2.1.

2. If you plan to monitor the water level with a recorder during the slug withdrawal test, install a transducer in the well according to Procedure WL-3 or WL-4. Make sure that the transducer, cable, or any attached couplings will not interfere with the removal of the slug. Also make sure the transducer is below the lowest expected water level upon removal of the slug. The change in water level upon removal of the slug theoretically can be calculated by dividing the volume of the slug by the cross-sectional area of the casing or screen. If, by displacement, submergence of the probe causes the water level to rise above the static water level, allow the water level to recover before proceeding.

3. Perform Step 7 in Section 4.2.1.

4. Attach the slug to the supporting line on the rig or other support. Make sure the slug is attached securely. If you plan to remove the slug from the water manually, secure the end of the supporting line.

Steps 5, 6, and 9 should be used only as a guide in positioning and removing the slug and do not have to be strictly adhered to. The important steps are to ensure that the top of the slug is below the static water level before the test is conducted and that the bottom of the slug is above the static water level after it is withdrawn.

9 0 1 1 7 7 4 0 6 5 2

5. Measure from end of the slug with an engineering measuring tape and mark off the supporting line. Suspend the slug in the well so that the bottom of the slug is above the static water level. Use the steel tape measurement performed in Step 5 of Section 4.2.1 to determine the correct position of the slug. Mark the supporting line at a fixed point (e.g., top of well casing). This mark will be referred to as the unsubmerged reference point.

6. Lower the slug slowly so that it is completely submerged. The top of the slug should be 0.1 feet below the static water level. Use the steel tape measurement performed in Step 5 of Section 4.2.1 to determine the correct position of the slug. Make sure that the electric water-level indicator or pressure probe will not interfere with or be damaged by the slug.

7. Allow the water level to recover to its static level or establish a pretest trend, before proceeding.

8. Measure the water level in the well being tested using a standard steel tape or an electric water-level indicator according to Procedure WL-1 and record the measurement on the Aquifer Test Data Sheet. Measure the water level from the measurement reference point.

9. At the predetermined time, quickly withdraw the slug from the water until the unsubmerged reference point reaches the fixed point. This will ensure that the slug is completely withdrawn from the water.

10. Measure the water level with an electric water-level indicator at the instant the slug is withdrawn and record water level on the Aquifer Test Data Sheet. Continue to measure and record water-level data at a sufficient rate to describe the response of the water levels. A recommended schedule is provided in Table 1. It may not be possible to measure the water level during the first 100 sec as frequently as scheduled. Measurements every 10 sec for the first 100 sec of the test will suffice when using an electric water-level indicator.

NOTE: It is recommended that the times of measurements for at least the first 30 min be prerecorded on the Aquifer Test Data Sheets <u>before</u> conducting the test. This will alleviate confusion as to when each measurement should be taken.

11. Continue to measure and record the water-level recovery until H/H_0 is less than 0.1 where

    H = head inside the well at time t after removal of the slug, above the initial head

H_0 = head inside the well above the initial head at the instant the slug is removed.

NOTE: Step 11 should be used only as a guide because it may not be possible to attain $H/H_0 < 0.1$ within a reasonable amount of time. The length of the test should be left to the discretion of the Project Hydrologist.

12. When all testing is completed, remove the slug from the well.

NOTE: If you plan to conduct the slug withdrawal test after the slug injection test, follow Steps 1 through 14 of Section 4.2.1 followed by Steps 3, 7, 8, 9, 10, 11, and 12 of Section 4.2.2. Also, the transducer may have to be repositioned to a greater depth if it is expected that the water level will drop below it when the slug is withdrawn.

5.0 REFERENCES

- Cooper, H. H., Jr., J. D. Bredehoeft, and I. S. Papadopulos. 1967. "Response of a Finite-Diameter Well to an Instantaneous Charge of Water." Water Resour. Res. 3(1):263-269.

- Hvorslev, M. J. 1951. "Time Lag and Soil Permeability in Groundwater Observations." U.S. Army Corps of Engineers Waterways Experiment Station Bulletin 36, Vicksburg, Mississippi.

- Lohman, S. W. 1979. Ground-Water Hydraulics. Geological Survey Professional Paper 708, United States Government Printing Office, Washington, D.C.

- Procedure WL-1, "Water-Level Measurement Procedure."

- Procedure WL-3, "Installation, Operation, and Removal of the Instrumentation Northwest Data Logger and Pressure Transducer with an IBM-Compatible Terminal Device."

- Procedure WL-4, "Installation, Operation, and Removal of a Data Logger and Pressure Transducer."

DISTRIBUTION

No. of
Copies

OFFSITE

2 DOE/Office of Scientific and Technical Information

ONSITE

3 Pacific Northwest Laboratory

Technical Report Files (3)

THIS PAGE INTENTIONALLY
LEFT BLANK